SPAN 7

BEAM	END	REPAIR TYPE	LENGTH	FIBER WRAP DIMENSIONS									ACRYLIC COATING (SQ YD)	PPC I-BEAM REPAIR DIMENSIONS				BEAM SECTION	BEARING TYPE
				A	B	C	D	E	F	G	H	FIBER WRAP (SQ FT)		EAST FACE (SQ FT)	WEST FACE (SQ FT)	BOTTOM FACE (SQ FT)	TOTAL PPC I-BEAM REPAIR (SQ FT)		
N7.1	S. End	Type 1	3 Strips x 1'-0" and 2 gaps at 1" = 3'-2"	6"	10 1/4"	7"	1'-10"	6"	10 1/4"	0"	0"	26.1	2.9	0.0	0.0	0.0	0.0	1990s 4'	Fixed 1985
	N. End	Type 4	3 Strips x 1'-0" and 2 gaps at 1" = 3'-2"	2'-3 1/8"	10 1/4"	7"	1'-10"	2'-3 1/8"	10 1/4"	5 7/8"	4"	54.9	6.1	0.0	0.0	0.0	0.0	1990s 4'	10-a
N7.2	S. End	Type 1	3 Strips x 1'-0" and 2 gaps at 1" = 3'-2"	6"	10 1/4"	7"	1'-10"	6"	10 1/4"	0"	0"	26.1	2.9	0.0	0.0	0.0	0.0	1990s 4'	Fixed 1985
	N. End	Type 4	3 Strips x 1'-0" and 2 gaps at 1" = 3'-2"	2'-3 1/8"	10 1/4"	7"	1'-10"	2'-3 1/8"	10 1/4"	5 7/8"	4"	54.9	6.1	0.0	0.0	0.0	0.0	1990s 4'	10-a
N7.3	S. End	Type 1	3 Strips x 1'-0" and 2 gaps at 1" = 3'-2"	6"	10 1/4"	7"	1'-10"	6"	10 1/4"	0"	0"	26.1	2.9	0.0	0.0	0.0	0.0	1990s 4'	Fixed 1985
	N. End	Type 1	3 Strips x 1'-0" and 2 gaps at 1" = 3'-2"	6"	10 1/4"	7"	1'-10"	6"	10 1/4"	0"	0"	26.1	2.9	0.0	0.0	0.0	0.0	1990s 4'	10-a
N7.4	S. End	Type 1	3 Strips x 1'-0" and 2 gaps at 1" = 3'-2"	1'-1 3/8"	2 7/8"	7"	1'-10"	6"	10 1/4"	0"	0"	26.1	2.9	0.0	0.0	0.0	0.0	original 4'	B2
	N. End	Type 1	4 Strips x 1'-0" and 3 gaps at 1" = 4'-3"	1'-1 3/8"	2 7/8"	7"	1'-10"	6"	10 1/4"	0"	0"	34.2	3.8	1.8	0.0	0.0	1.8	original 4'	See 1977 Plans
N7.5	S. End	Type 1	3 Strips x 1'-0" and 2 gaps at 1" = 3'-2"	1'-1 3/8"	2 7/8"	7"	1'-10"	6"	10 1/4"	0"	0"	26.1	2.9	0.0	0.0	0.0	0.0	original 4'	B2
	N. End	Type 1	3 Strips x 1'-0" and 2 gaps at 1" = 3'-2"	1'-1 3/8"	2 7/8"	7"	1'-10"	6"	10 1/4"	0"	0"	26.1	2.9	0.0	0.3	0.0	0.3	original 4'	See 1977 Plans
N7.6	S. End	Type 1	3 Strips x 1'-0" and 2 gaps at 1" = 3'-2"	1'-1 3/8"	2 7/8"	7"	1'-10"	6"	10 1/4"	0"	0"	26.1	2.9	0.0	0.0	0.0	0.0	original 4'	B2
	N. End	Type 1	4 Strips x 1'-0" and 3 gaps at 1" = 4'-3"	1'-1 3/8"	2 7/8"	7"	1'-10"	6"	10 1/4"	0"	0"	34.2	3.8	0.3	0.6	1.8	2.7	original 4'	See 1977 Plans
N7.7	S. End	Type 1	3 Strips x 1'-0" and 2 gaps at 1" = 3'-2"	1'-1 3/8"	2 7/8"	7"	1'-10"	6"	10 1/4"	0"	0"	26.1	2.9	0.0	0.0	0.0	0.0	original 4'	B2
	N. End	Type 1	4 Strips x 1'-0" and 3 gaps at 1" = 4'-3"	1'-1 3/8"	2 7/8"	7"	1'-10"	6"	10 1/4"	0"	0"	34.2	3.8	0.3	0.6	1.8	2.7	original 4'	See 1977 Plans
N7.8	S. End	Type 1	3 Strips x 1'-0" and 2 gaps at 1" = 3'-2"	1'-1 3/8"	2 7/8"	7"	1'-10"	6"	10 1/4"	0"	0"	26.1	2.9	0.0	0.0	0.0	0.0	original 4'	B2
	N. End	Type 1	4 Strips x 1'-0" and 3 gaps at 1" = 4'-3"	1'-1 3/8"	2 7/8"	7"	1'-10"	6"	10 1/4"	0"	0"	34.2	3.8	0.6	0.3	2.8	3.6	original 4'	See 1977 Plans
N7.9	S. End	Type 1	3 Strips x 1'-0" and 2 gaps at 1" = 3'-2"	6"	10 1/4"	7"	1'-10"	6"	10 1/4"	0"	0"	26.1	2.9	0.0	0.0	0.0	0.0	1990s 4'	Fixed 1985
	N. End	Type 1	3 Strips x 1'-0" and 2 gaps at 1" = 3'-2"	6"	10 1/4"	7"	1'-10"	6"	10 1/4"	0"	0"	26.1	2.9	0.0	0.0	0.0	0.0	1990s 4'	10-a
N7.10	S. End	Type 1	3 Strips x 1'-0" and 2 gaps at 1" = 3'-2"	6"	10 1/4"	7"	1'-10"	6"	10 1/4"	0"	0"	26.1	2.9	0.0	0.0	0.0	0.0	1990s 4'	Fixed 1985
	N. End	Type 1	3 Strips x 1'-0" and 2 gaps at 1" = 3'-2"	6"	10 1/4"	7"	1'-10"	6"	10 1/4"	0"	0"	26.1	2.9	0.0	0.0	0.0	0.0	1990s 4'	10-a
N7.11	S. End	Type 1	3 Strips x 1'-0" and 2 gaps at 1" = 3'-2"	1'-1 3/8"	2 7/8"	7"	1'-10"	6"	10 1/4"	0"	0"	26.1	2.9	0.0	0.0	0.0	0.0	original 4'	B2
	N. End	Type 1	5 Strips x 1'-0" and 4 gaps at 1" = 5'-4"	1'-1 3/8"	2 7/8"	7"	1'-10"	6"	10 1/4"	0"	0"	42.3	4.7	0.3	0.3	3.7	4.3	original 4'	See 1977 Plans
N7.12	S. End	Type 1	3 Strips x 1'-0" and 2 gaps at 1" = 3'-2"	1'-1 3/8"	2 7/8"	7"	1'-10"	6"	10 1/4"	0"	0"	26.1	2.9	0.0	0.0	0.0	0.0	original 4'	B2
	N. End	Type 1	5 Strips x 1'-0" and 4 gaps at 1" = 5'-4"	1'-1 3/8"	2 7/8"	7"	1'-10"	6"	10 1/4"	0"	0"	42.3	4.7	1.2	0.9	3.7	5.7	original 4'	See 1977 Plans
N7.13	S. End	Type 1	3 Strips x 1'-0" and 2 gaps at 1" = 3'-2"	1'-1 3/8"	2 7/8"	7"	1'-10"	6"	10 1/4"	0"	0"	26.1	2.9	0.0	0.0	0.0	0.0	original 4'	B2
	N. End	Type 1	5 Strips x 1'-0" and 4 gaps at 1" = 5'-4"	1'-1 3/8"	2 7/8"	7"	1'-10"	6"	10 1/4"	0"	0"	42.3	4.7	0.9	0.9	3.7	5.4	original 4'	See 1977 Plans
N7.14	S. End	Type 1	3 Strips x 1'-0" and 2 gaps at 1" = 3'-2"	1'-1 3/8"	2 7/8"	7"	1'-10"	6"	10 1/4"	0"	0"	26.1	2.9	0.0	0.0	0.0	0.0	original 4'	B2
	N. End	Type 2	4 Strips x 1'-0" and 3 gaps at 1" = 4'-3"	1'-5 7/8"	2 7/8"	7"	1'-10"	10 1/2"	10 1/4"	0"	0"	46.4	5.2	1.8	0.3	1.8	3.9	original 4'	See 1977 Plans
N7.15	S. End	Type 1	3 Strips x 1'-0" and 2 gaps at 1" = 3'-2"	1'-1 3/8"	2 7/8"	7"	1'-10"	6"	10 1/4"	0"	0"	26.1	2.9	0.0	0.0	0.0	0.0	original 4'	B2
	N. End	Type 1	4 Strips x 1'-0" and 3 gaps at 1" = 4'-3"	1'-1 3/8"	2 7/8"	7"	1'-10"	6"	10 1/4"	0"	0"	34.2	3.8	0.0	0.6	1.8	2.4	original 4'	See 1977 Plans

SPAN 8

BEAM	END	REPAIR TYPE	LENGTH	FIBER WRAP DIMENSIONS									ACRYLIC COATING (SQ YD)	PPC I-BEAM REPAIR DIMENSIONS				BEAM SECTION	BEARING TYPE
				A	B	C	D	E	F	G	H	FIBER WRAP (SQ FT)		EAST FACE (SQ FT)	WEST FACE (SQ FT)	BOTTOM FACE (SQ FT)	TOTAL PPC I-BEAM REPAIR (SQ FT)		
N8.1	S. End	Type 1	3 Strips x 1'-0" and 2 gaps at 1" = 3'-2"	6"	10 1/4"	7"	1'-10"	6"	10 1/4"	0"	0"	26.1	2.9	0.0	0.0	0.0	0.0	1990s 4'	10-a
	N. End	Type 4	3 Strips x 1'-0" and 2 gaps at 1" = 3'-2"	2'-3 1/8"	10 1/4"	7"	1'-10"	2'-3 1/8"	10 1/4"	5 7/8"	4"	54.9	6.1	0.0	0.0	0.0	0.0	1990s 4'	Fixed 1985
N8.2	S. End	Type 1	3 Strips x 1'-0" and 2 gaps at 1" = 3'-2"	6"	10 1/4"	7"	1'-10"	6"	10 1/4"	0"	0"	26.1	2.9	0.0	0.0	0.0	0.0	1990s 4'	10-a
	N. End	Type 1	3 Strips x 1'-0" and 2 gaps at 1" = 3'-2"	6"	10 1/4"	7"	1'-10"	6"	10 1/4"	0"	0"	26.1	2.9	0.0	0.0	0.0	0.0	1990s 4'	Fixed 1985
N8.3	S. End	Type 1	3 Strips x 1'-0" and 2 gaps at 1" = 3'-2"	6"	10 1/4"	7"	1'-10"	6"	10 1/4"	0"	0"	26.1	2.9	0.0	0.0	0.0	0.0	1990s 4'	10-a
	N. End	Type 1	3 Strips x 1'-0" and 2 gaps at 1" = 3'-2"	6"	10 1/4"	7"	1'-10"	6"	10 1/4"	0"	0"	26.1	2.9	0.0	0.0	0.0	0.0	1990s 4'	Fixed 1985
N8.4	S. End	Type 1	4 Strips x 1'-0" and 3 gaps at 1" = 4'-3"	1'-1 3/8"	2 7/8"	7"	1'-10"	6"	10 1/4"	0"	0"	34.2	3.8	0.0	0.0	1.8	1.8	original 4'	See 1977 Plans
	N. End	Type 1	4 Strips x 1'-0" and 3 gaps at 1" = 4'-3"	1'-1 3/8"	2 7/8"	7"	1'-10"	6"	10 1/4"	0"	0"	34.2	3.8	0.6	0.6	2.8	3.9	original 4'	B2
N8.5	S. End	Type 1	5 Strips x 1'-0" and 4 gaps at 1" = 5'-4"	1'-1 3/8"	2 7/8"	7"	1'-10"	6"	10 1/4"	0"	0"	42.3	4.7	0.0	0.3	3.7	4.0	original 4'	See 1977 Plans
	N. End	Type 1	4 Strips x 1'-0" and 3 gaps at 1" = 4'-3"	1'-1 3/8"	2 7/8"	7"	1'-10"	6"	10 1/4"	0"	0"	34.2	3.8	0.6	0.6	2.8	3.9	original 4'	B2
N8.6	S. End	Type 1	4 Strips x 1'-0" and 3 gaps at 1" = 4'-3"	1'-1 3/8"	2 7/8"	7"	1'-10"	6"	10 1/4"	0"	0"	34.2	3.8	0.6	0.3	2.8	3.6	original 4'	See 1977 Plans
	N. End	Type 1	4 Strips x 1'-0" and 3 gaps at 1" = 4'-3"	1'-1 3/8"	2 7/8"	7"	1'-10"	6"	10 1/4"	0"	0"	34.2	3.8	0.3	0.0	2.8	3.0	original 4'	B2
N8.7	S. End	Type 1	3 Strips x 1'-0" and 2 gaps at 1" = 3'-2"	1'-1 3/8"	2 7/8"	7"	1'-10"	6"	10 1/4"	0"	0"	26.1	2.9	0.6	0.3	0.0	0.9	original 4'	See 1977 Plans
	N. End	Type 1	4 Strips x 1'-0" and 3 gaps at 1" = 4'-3"	1'-1 3/8"	2 7/8"	7"	1'-10"	6"	10 1/4"	0"	0"	34.2	3.8	0.3	0.3	2.8	3.3	original 4'	B2
N8.8	S. End	Type 1	3 Strips x 1'-0" and 2 gaps at 1" = 3'-2"	1'-1 3/8"	2 7/8"	7"	1'-10"	6"	10 1/4"	0"	0"	26.1	2.9	0.3	0.6	0.9	1.8	original 4'	See 1977 Plans
	N. End	Type 1	4 Strips x 1'-0" and 3 gaps at 1" = 4'-3"	1'-1 3/8"	2 7/8"	7"	1'-10"	6"	10 1/4"	0"	0"	34.2	3.8	0.6	0.9	1.8	3.3	original 4'	B2
N8.9	S. End	Type 2	3 Strips x 1'-0" and 2 gaps at 1" = 3'-2"	10 1/2"	10 1/4"	7"	1'-10"	10 1/2"	10 1/4"	0"	0"	35.0	3.9	0.6	0.0	0.0	0.6	1990s 4'	10-a
	N. End	Type 1	4 Strips x 1'-0" and 3 gaps at 1" = 4'-3"	6"	10 1/4"	7"	1'-10"	6"	10 1/4"	0"	0"	34.2	3.8	0.0	0.0	1.8	1.8	1990s 4'	Fixed 1985
N8.10	S. End	Type 1	3 Strips x 1'-0" and 2 gaps at 1" = 3'-2"	6"	10 1/4"	7"	1'-10"	6"	10 1/4"	0"	0"	26.1	2.9	0.0	0.0	0.0	0.0	1990s 4'	10-a
	N. End	Type 1	4 Strips x 1'-0" and 3 gaps at 1" = 4'-3"	6"	10 1/4"	7"	1'-10"	6"	10 1/4"	0"	0"	34.2	3.8	0.0	0.0	1.8	1.8	1990s 4'	Fixed 1985
N8.11	S. End	Type 1	4 Strips x 1'-0" and 3 gaps at 1" = 4'-3"	1'-1 3/8"	2 7/8"	7"	1'-10"	6"	10 1/4"	0"	0"	34.2	3.8	1.2	0.3	2.8	4.2	original 4'	See 1977 Plans
	N. End	Type 1	3 Strips x 1'-0" and 2 gaps at 1" = 3'-2"	1'-1 3/8"	2 7/8"	7"	1'-10"	6"	10 1/4"	0"	0"	26.1	2.9	0.6	0.0	0.0	0.6	original 4'	B2
N8.12	S. End	Type 1	5 Strips x 1'-0" and 4 gaps at 1" = 5'-4"	1'-1 3/8"	2 7/8"	7"	1'-10"	6"	10 1/4"	0"	0"	42.3	4.7	1.8	1.5	4.6	7.8	original 4'	See 1977 Plans
	N. End	Type 1	3 Strips x 1'-0" and 2 gaps at 1" = 3'-2"	1'-1 3/8"	2 7/8"	7"	1'-10"	6"	10 1/4"	0"	0"	26.1	2.9	1.0	0.3	0.9	2.2	original 4'	B2
N8.13	S. End	Type 1	4 Strips x 1'-0" and 3 gaps at 1" = 4'-3"	1'-1 3/8"	2 7/8"	7"	1'-10"	6"	10 1/4"	0"	0"	34.2	3.8	0.6	0.6	2.8	3.9	original 4'	See 1977 Plans
	N. End	Type 1	3 Strips x 1'-0" and 2 gaps at 1" = 3'-2"	1'-1 3/8"	2 7/8"	7"	1'-10"	6"	10 1/4"	0"	0"	26.1	2.9	0.3	0.6	0.0	0.9	original 4'	B2
N8.14	S. End	Type 1	3 Strips x 1'-0" and 2 gaps at 1" = 3'-2"	1'-1 3/8"	2 7/8"	7"	1'-10"	6"	10 1/4"	0"	0"	26.1	2.9	0.3	0.3	0.0	0.6	original 4'	See 1977 Plans
	N. End	Type 1	5 Strips x 1'-0" and 4 gaps at 1" = 5'-4"	1'-1 3/8"	2 7/8"	7"	1'-10"	6"	10 1/4"	0"	0"	42.3	4.7	0.6	0.6	3.7	4.8	original 4'	B2
N8.15	S. End	Type 1	4 Strips x 1'-0" and 3 gaps at 1" = 4'-3"	1'-1 3/8"	2 7/8"	7"	1'-10"	6"	10 1/4"	0"	0"	34.2	3.8	1.8	0.0	2.8	4.5	original 4'	See 1977 Plans
	N. End	Type 1	6 Strips x 1'-0" and 5 gaps at 1" = 6'-5"	1'-1 3/8"	2 7/8"	7"	1'-10"	6"	10 1/4"	0"	0"	50.4	5.6	0.1	2.2	5.5	7.8	original 4'	B2

SPAN 10

BEAM	END	REPAIR TYPE	LENGTH	FIBER WRAP DIMENSIONS									ACRYLIC COATING (SQ YD)	PPC I-BEAM REPAIR DIMENSIONS				BEAM SECTION	BEARING TYPE
				A	B	C	D	E	F	G	H	FIBER WRAP (SQ FT)		EAST FACE (SQ FT)	WEST FACE (SQ FT)	BOTTOM FACE (SQ FT)	TOTAL PPC I-BEAM REPAIR (SQ FT)		
N10.1	S. End	Type 4	3 Strips x 1'-0" and 2 gaps at 1" = 3'-2"	2'-3 1/8"	10 1/4"	7"	1'-10"	2'-3 1/8"	10 1/4"	5 7/8"	4"	54.9	6.1	0.0	0.0	0.0	0.0	1990s 4'	Fixed 1985
	N. End	Type 4	3 Strips x 1'-0" and 2 gaps at 1" = 3'-2"	2'-3 1/8"	10 1/4"	7"	1'-10"	2'-3 1/8"	10 1/4"	5 7/8"	4"	54.9	6.1	0.0	0.0	0.0	0.0	1990s 4'	7-a
N10.2	S. End	Type 1	3 Strips x 1'-0" and 2 gaps at 1" = 3'-2"	6"	10 1/4"	7"	1'-10"	6"	10 1/4"	0"	0"	26.1	2.9	0.0	0.0	0.0	0.0	1990s 4'	Fixed 1985
	N. End	Type 1	3 Strips x 1'-0" and 2 gaps at 1" = 3'-2"	6"	10 1/4"	7"	1'-10"	6"	10 1/4"	0"	0"	26.1	2.9	0.0	0.0	0.0	0.0	1990s 4'	7-a
N10.3	S. End	Type 1	3 Strips x 1'-0" and 2 gaps at 1" = 3'-2"	6"	10 1/4"	7"	1'-10"	6"	10 1/4"	0"	0"	26.1	2.9	0.0	0.0	0.0	0.0	1990s 4'	Fixed 1985
	N. End	Type 1	3 Strips x 1'-0" and 2 gaps at 1" = 3'-2"	6"	10 1/4"	7"	1'-10"	6"	10 1/4"	0"	0"	26.1	2.9	0.0	0.0	0.0	0.0	1990s 4'	7-a
N10.4	S. End	Type 1	4 Strips x 1'-0" and 3 gaps at 1" = 4'-3"	1'-1 3/8"	2 7/8"	7"	1'-10"	6"	10 1/4"	0"	0"	34.2	3.8	0.3	0.6	2.8	3.6	original 4'	B4
	N. End	Type 1	5 Strips x 1'-0" and 4 gaps at 1" = 5'-4"	1'-1 3/8"	2 7/8"	7"	1'-10"	6"	10 1/4"	0"	0"	42.3	4.7	0.0	1.2	4.6	5.8	original 4'	See 1977 Plans
N10.5	S. End	Type 1	4 Strips x 1'-0" and 3 gaps at 1" = 4'-3"	1'-1 3/8"	2 7/8"	7"	1'-10"	6"	10 1/4"	0"	0"	34.2	3.8	0.3	0.9	1.8	3.0	original 4'	B4
	N. End	Type 1	3 Strips x 1'-0" and 2 gaps at 1" = 3'-2"	1'-1 3/8"	2 7/8"	7"	1'-10"	6"	10 1/4"	0"	0"	26.1	2.9	0.6	0.6	0.0	1.2	original 4'	See 1977 Plans
N10.6	S. End	Type 1	3 Strips x 1'-0" and 2 gaps at 1" = 3'-2"	1'-1 3/8"	2 7/8"	7"	1'-10"	6"	10 1/4"	0"	0"	26.1	2.9	0.6	0.0	0.0	0.6	original 4'	B2
	N. End	Type 1	4 Strips x 1'-0" and 3 gaps at 1" = 4'-3"	1'-1 3/8"	2 7/8"	7"	1'-10"	6"	10 1/4"	0"	0"	34.2	3.8	0.9	0.6	2.8	4.2	original 4'	See 1977 Plans
N10.7	S. End	Type 1	3 Strips x 1'-0" and 2 gaps at 1" = 3'-2"	6"	10 1/4"	7"	1'-10"	6"	10 1/4"	0"	0"	26.1	2.9	0.0	0.0	0.0	0.0	1990s 4'	Fixed 1985
	N. End	Type 1	3 Strips x 1'-0" and 2 gaps at 1" = 3'-2"	6"	10 1/4"	7"	1'-10"	6"	10 1/4"	0"	0"	26.1	2.9	0.0	0.0	0.0	0.0	1990s 4'	10-a
N10.8	S. End	Type 1	3 Strips x 1'-0" and 2 gaps at 1" = 3'-2"	6"	10 1/4"	7"	1'-10"	6"	10 1/4"	0"	0"	26.1	2.9	0.0	0.0	0.0	0.0	1990s 4'	Fixed 1985
	N. End	Type 1	3 Strips x 1'-0" and 2 gaps at 1" = 3'-2"	6"	10 1/4"	7"	1'-10"	6"	10 1/4"	0"	0"	26.1	2.9	0.0	0.0	0.0	0.0	1990s 4'	10-a
N10.9	S. End	Type 1	3 Strips x 1'-0" and 2 gaps at 1" = 3'-2"	1'-1 3/8"	2 7/8"	7"	1'-10"	6"	10 1/4"	0"	0"	26.1	2.9	0.0	0.0	0.9	0.9	original 4'	B2
	N. End	Type 1	4 Strips x 1'-0" and 3 gaps at 1" = 4'-3"	1'-1 3/8"	2 7/8"	7"	1'-10"	6"	10 1/4"	0"	0"	34.2	3.8	0.0	0.3	2.8	3.0	original 4'	See 1977 Plans
N10.10	S. End	Type 1	3 Strips x 1'-0" and 2 gaps at 1" = 3'-2"	1'-1 3/8"	2 7/8"	7"	1'-10"	6"	10 1/4"	0"	0"	26.1	2.9	0.0	0.3	0.0	0.3	original 4'	B2
	N. End	Type 1	3 Strips x 1'-0" and 2 gaps at 1" = 3'-2"	1'-1 3/8"	2 7/8"	7"	1'-10"	6"	10 1/4"	0"	0"	26.1	2.9	0.3	0.0	0.0	0.3	original 4'	See 1977 Plans
N10.11	S. End	Type 1	3 Strips x 1'-0" and 2 gaps at 1" = 3'-2"	1'-1 3/8"	2 7/8"	7"	1'-10"	6"	10 1/4"	0"	0"	26.1	2.9	0.3	0.3	0.0	0.6	original 4'	B2
	N. End	Type 1	3 Strips x 1'-0" and 2 gaps at 1" = 3'-2"	1'-1 3/8"	2 7/8"	7"	1'-10"	6"	10 1/4"	0"	0"	26.1	2.9	0.0	0.3	0.0	0.3	original 4'	See 1977 Plans
N10.12	S. End	Type 1	5 Strips x 1'-0" and 4 gaps at 1" = 5'-4"	1'-1 3/8"	2 7/8"	7"	1'-10"	6"	10 1/4"	0"	0"	42.3	4.7	0.3	0.0	3.7	4.0	original 4'	B2
	N. End	Type 1	8 Strips x 1'-0" and 7 gaps at 1" = 8'-7"	1'-1 3/8"	2 7/8"	7"	1'-10"	6"	10 1/4"	0"	0"	66.6	7.4	0.0	0.0	9.2	9.2	original 4'	See 1977 Plans

SPAN 11

BEAM	END	REPAIR TYPE	LENGTH	FIBER WRAP DIMENSIONS									ACRYLIC COATING (SQ YD)	PPC I-BEAM REPAIR DIMENSIONS				BEAM SECTION	BEARING TYPE
				A	B	C	D	E	F	G	H	FIBER WRAP (SQ FT)		EAST FACE (SQ FT)	WEST FACE (SQ FT)	BOTTOM FACE (SQ FT)	TOTAL PPC I-BEAM REPAIR (SQ FT)		
N11.1	S. End	Type 1	3 Strips x 1'-0" and 2 gaps at 1" = 3'-2"	1'-4"	0"	4"	1'-6"	6"	10"	0"	0"	23.5	2.6	0.0	0.0	0.0	0.0	1990s 2'-6"	10-aa
	N. End	Type 1	3 Strips x 1'-0" and 2 gaps at 1" = 3'-2"	1'-4"	0"	4"	1'-6"	6"	10"	0"	0"	23.5	2.6	0.0	0.0	0.0	0.0	1990s 2'-6"	Fixed Sp 11 N. End
N11.2	S. End	Type 1	3 Strips x 1'-0" and 2 gaps at 1" = 3'-2"	1'-4"	0"	4"	1'-6"	6"	10"	0"	0"	23.5	2.6	0.0	0.0	0.0	0.0	1990s 2'-6"	10-aa
	N. End	Type 1	3 Strips x 1'-0" and 2 gaps at 1" = 3'-2"	1'-4"	0"	4"	1'-6"	6"	10"	0"	0"	23.5	2.6	0.0	0.0	0.0	0.0	1990s 2'-6"	Fixed Sp 11 N. End
N11.3	S. End	Type 1	3 Strips x 1'-0" and 2 gaps at 1" = 3'-2"	1'-4"	0"	4"	1'-6"	6"	10"	0"	0"	23.5	2.6	0.0	0.0	0.0	0.0	1990s 2'-6"	10-aa
	N. End	Type 1	3 Strips x 1'-0" and 2 gaps at 1" = 3'-2"	1'-4"	0"	4"	1'-6"	6"	10"	0"	0"	23.5	2.6	0.0	0.0	0.0	0.0	1990s 2'-6"	Fixed Sp 11 N. End
N11.4	S. End	Type 1	3 Strips x 1'-0" and 2 gaps at 1" = 3'-2"	1'-4"	0"	4"	1'-6"	6"	10"	0"	0"	23.5	2.6	0.0	0.0	0.0	0.0	1990s 2'-6"	10-aa
	N. End	Type 1	3 Strips x 1'-0" and 2 gaps at 1" = 3'-2"	1'-4"	0"	4"	1'-6"	6"	10"	0"	0"	23.5	2.6	0.0	0.0	0.0	0.0	1990s 2'-6"	Fixed Sp 11 N. End
N11.5	S. End	Type 4	3 Strips x 1'-0" and 2 gaps at 1" = 3'-2"	2'-6 3/8"	3 1/2"	6"	1'-6"	2'-5"	4 7/8"	4 1/4"	4"	47.2	5.2	0.0	0.0	0.0	0.0	original 3'	See 1977 Plans
	N. End	Type 1	4 Strips x 1'-0" and 3 gaps at 1" = 4'-3"	7 3/8"	3 1/2"	6"	1'-6"	6"	4 7/8"	0"	0"	23.5	2.6	1.1	0.9	1.5	3.5	original 3'	B6
N11.6	S. End	Type 1	3 Strips x 1'-0" and 2 gaps at 1" = 3'-2"	7 3/8"	3 1/2"	6"	1'-6"	6"	4 7/8"	0"	0"	17.7	2.0	0.4	0.3	0.8	1.4	original 3'	See 1977 Plans
	N. End	Type 1	3 Strips x 1'-0" and 2 gaps at 1" = 3'-2"	7 3/8"	3 1/2"	6"	1'-6"	6"	4 7/8"	0"	0"	17.7	2.0	0.5	0.8	0.8	2.0	original 3'	B6
N11.7	S. End	Type 1	4 Strips x 1'-0" and 3 gaps at 1" = 4'-3"	7 3/8"	3 1/2"	6"	1'-6"	6"	4 7/8"	0"	0"	23.5	2.6	0.2	1.5	0.0	1.7	original 3'	See 1977 Plans
	N. End	Type 1	6 Strips x 1'-0" and 5 gaps at 1" = 6'-5"	7 3/8"	3 1/2"	6"	1'-6"	6"	4 7/8"	0"	0"	35.0	3.9	2.5	0.4	0.0	2.9	original 3'	B6
N11.8	S. End	Type 1	4 Strips x 1'-0" and 3 gaps at 1" = 4'-3"	7 3/8"	3 1/2"	6"	1'-6"	6"	4 7/8"	0"	0"	23.5	2.6	0.2	1.5	0.0	1.7	original 3'	See 1977 Plans
	N. End	Type 1	3 Strips x 1'-0" and 2 gaps at 1" = 3'-2"	7 3/8"	3 1/2"	6"	1'-6"	6"	4 7/8"	0"	0"	17.7	2.0	0.2	0.2	0.0	0.4	original 3'	B6
N11.9	S. End	Type 1	4 Strips x 1'-0" and 3 gaps at 1" = 4'-3"	7 3/8"	3 1/2"	6"	1'-6"	6"	4 7/8"	0"	0"	23.5	2.6	0.3	0.6	1.3	2.2	original 3'	See 1977 Plans
	N. End	Type 1	3 Strips x 1'-0" and 2 gaps at 1" = 3'-2"	7 3/8"	3 1/2"	6"	1'-6"	6"	4 7/8"	0"	0"	17.7	2.0	0.3	0.6	0.5	1.4	original 3'	B6
N11.10	S. End	Type 1	3 Strips x 1'-0" and 2 gaps at 1" = 3'-2"	7 3/8"	3 1/2"	6"	1'-6"	6"	4 7/8"	0"	0"	17.7	2.0	0.7	0.8	0.3	1.7	original 3'	See 1977 Plans
	N. End	Type 1	3 Strips x 1'-0" and 2 gaps at 1" = 3'-2"	7 3/8"	3 1/2"	6"	1'-6"	6"	4 7/8"	0"	0"	17.7	2.0	0.5	0.5	0.0	1.0	original 3'	B6
N11.11	S. End	Type 2	3 Strips x 1'-0" and 2 gaps at 1" = 3'-2"	10 1/2"	8 1/2"	6"	1'-6"	10 1/2"	8 1/2"	0"	0"	31.3	3.5	0.5	0.0	0.0	0.5	1990s 3'	10-aa
	N. End	Type 1	3 Strips x 1'-0" and 2 gaps at 1" = 3'-2"	6"	8 1/2"	6"	1'-6"	6"	8 1/2"	0"	0"	22.5	2.5	0.0	0.0	0.0	0.0	1990s 3'	Fixed Sp 11 N. End
N11.12	S. End	Type 1	3 Strips x 1'-0" and 2 gaps at 1" = 3'-2"	6"	8 1/2"	6"	1'-6"	6"	8 1/2"	0"	0"	22.5	2.5	0.0	0.0	0.0	0.0	1990s 3'	10-aa
	N. End	Type 1	3 Strips x 1'-0" and 2 gaps at 1" = 3'-2"	6"	8 1/2"	6"	1'-6"	6"	8 1/2"	0"	0"	22.5	2.5	0.0	0.0	0.0	0.0	1990s 3'	Fixed Sp 11 N. End
N11.13	S. End	Type 1	3 Strips x 1'-0" and 2 gaps at 1" = 3'-2"	7 3/8"	3 1/2"	6"	1'-6"	6"	4 7/8"	0"	0"	17.7	2.0	0.1	0.6	1.0	1.7	original 3'	See 1977 Plans
	N. End	Type 1	3 Strips x 1'-0" and 2 gaps at 1" = 3'-2"	7 3/8"	3 1/2"	6"	1'-6"	6"	4 7/8"	0"	0"	17.7	2.0	0.1	0.2	0.0	0.3	original 3'	B6
N11.14	S. End	Type 1	3 Strips x 1'-0" and 2 gaps at 1" = 3'-2"	7 3/8"	3 1/2"	6"	1'-6"	6"	4 7/8"	0"	0"	17.7	2.0	0.3	0.2	1.0	1.5	original 3'	See 1977 Plans
	N. End	Type 1	3 Strips x 1'-0" and 2 gaps at 1" = 3'-2"	7 3/8"	3 1/2"	6"	1'-6"	6"	4 7/8"	0"	0"	17.7	2.0	0.3	0.2	0.0	0.4	original 3'	B6
N11.15	S. End	Type 1	3 Strips x 1'-0" and 2 gaps at 1" = 3'-2"	7 3/8"	3 1/2"	6"	1'-6"	6"	4 7/8"	0"	0"	17.7	2.0	0.2	0.6	1.0	1.8	original 3'	See 1977 Plans
	N. End	Type 1	3 Strips x 1'-0" and 2 gaps at 1" = 3'-2"	7 3/8"	3 1/2"	6"	1'-6"	6"	4 7/8"	0"	0"	17.7	2.0	0.2	0.2	0.8	1.1	original 3'	B6
N11.16	S. End	Type 1	3 Strips x 1'-0" and 2 gaps at 1" = 3'-2"	7 3/8"	3 1/2"	6"	1'-6"	6"	4 7/8"	0"	0"	17.7	2.0	0.2	0.5	0.0	0.7	original 3'	See 1977 Plans
	N. End	Type 1	3 Strips x 1'-0" and 2 gaps at 1" = 3'-2"	7 3/8"	3 1/2"	6"	1'-6"	6"	4 7/8"	0"	0"	17.7	2.0	0.0	0.0	0.0	0.0	original 3'	B6
N11.17	S. End	Type 1	4 Strips x 1'-0" and 3 gaps at 1" = 4'-3"	7 3/8"	3 1/2"	6"	1'-6"	6"	4 7/8"	0"	0"	23.5	2.6	1.1	1.1	1.5	3.8	original 3'	See 1977 Plans
	N. End	Type 1	4 Strips x 1'-0" and 3 gaps at 1" = 4'-3"	7 3/8"	3 1/2"	6"	1'-6"	6"	4 7/8"	0"	0"	23.5	2.6	1.4	0.9	2.3	4.5	original 3'	B6
N11.18	S. End	Type 1	5 Strips x 1'-0" and 4 gaps at 1" = 5'-4"	7 3/8"	3 1/2"	6"	1'-6"	6"	4 7/8"	0"	0"	29.2	3.2	1.6	0.6	2.3	4.5	original 3'	See 1977 Plans
	N. End	Type 1	4 Strips x 1'-0" and 3 gaps at 1" = 4'-3"	7 3/8"	3 1/2"	6"	1'-6"	6"	4 7/8"	0"	0"	23.5	2.6	0.2	0.6	1.5	2.3	original 3'	B6

SPAN 12

BEAM	END	REPAIR TYPE	LENGTH	FIBER WRAP DIMENSIONS									ACRYLIC COATING (SQ YD)	PPC I-BEAM REPAIR DIMENSIONS				BEAM SECTION	BEARING TYPE
				A	B	C	D	E	F	G	H	FIBER WRAP (SQ FT)		EAST FACE (SQ FT)	WEST FACE (SQ FT)	BOTTOM FACE (SQ FT)	TOTAL PPC I-BEAM REPAIR (SQ FT)		
N12.1	S. End	Type 1	3 Strips x 1'-0" and 2 gaps at 1" = 3'-2"	6"	10 1/4"	7"	1'-10"	6"	10 1/4"	0"	0"	26.1	2.9	0.0	0.0	0.0	0.0	1990s 4'	Fixed 1985
	N. End	Type 1	3 Strips x 1'-0" and 2 gaps at 1" = 3'-2"	6"	10 1/4"	7"	1'-10"	6"	10 1/4"	0"	0"	26.1	2.9	0.0	0.0	0.0	0.0	1990s 4'	10-a
N12.2	S. End	Type 1	3 Strips x 1'-0" and 2 gaps at 1" = 3'-2"	6"	10 1/4"	7"	1'-10"	6"	10 1/4"	0"	0"	26.1	2.9	0.0	0.0	0.0	0.0	1990s 4'	Fixed 1985
	N. End	Type 1	3 Strips x 1'-0" and 2 gaps at 1" = 3'-2"	6"	10 1/4"	7"	1'-10"	6"	10 1/4"	0"	0"	26.1	2.9	0.0	0.0	0.0	0.0	1990s 4'	10-a
N12.3	S. End	Type 1	3 Strips x 1'-0" and 2 gaps at 1" = 3'-2"	6"	10 1/4"	7"	1'-10"	6"	10 1/4"	0"	0"	26.1	2.9	0.0	0.0	0.0	0.0	1990s 4'	Fixed 1985
	N. End	Type 4	3 Strips x 1'-0" and 2 gaps at 1" = 3'-2"	2'-3 1/8"	10 1/4"	7"	1'-10"	2'-3 1/8"	10 1/4"	5 7/8"	4"	54.9	6.1	0.0	0.0	0.0	0.0	1990s 4'	10-a
N12.4	S. End	Type 1	3 Strips x 1'-0" and 2 gaps at 1" = 3'-2"	1'-1 3/8"	2 7/8"	7"	1'-10"	6"	10 1/4"	0"	0"	26.1	2.9	0.0	0.0	0.0	0.0	original 4'	B2
	N. End	Type 1	3 Strips x 1'-0" and 2 gaps at 1" = 3'-2"	1'-1 3/8"	2 7/8"	7"	1'-10"	6"	10 1/4"	0"	0"	26.1	2.9	0.0	0.0	0.0	0.0	original 4'	See 1977 Plans
N12.5	S. End	Type 1	3 Strips x 1'-0" and 2 gaps at 1" = 3'-2"	1'-1 3/8"	2 7/8"	7"	1'-10"	6"	10 1/4"	0"	0"	26.1	2.9	0.0	0.0	0.0	0.0	original 4'	B2
	N. End	Type 1	3 Strips x 1'-0" and 2 gaps at 1" = 3'-2"	1'-1 3/8"	2 7/8"	7"	1'-10"	6"	10 1/4"	0"	0"	26.1	2.9	0.0	0.0	0.0	0.0	original 4'	See 1977 Plans
N12.6	S. End	Type 1	3 Strips x 1'-0" and 2 gaps at 1" = 3'-2"	1'-1 3/8"	2 7/8"	7"	1'-10"	6"	10 1/4"	0"	0"	26.1	2.9	0.0	0.0	0.0	0.0	original 4'	B2
	N. End	Type 1	6 Strips x 1'-0" and 5 gaps at 1" = 6'-5"	1'-1 3/8"	2 7/8"	7"	1'-10"	6"	10 1/4"	0"	0"	50.4	5.6	0.6	0.0	5.5	6.1	original 4'	See 1977 Plans
N12.7	S. End	Type 1	3 Strips x 1'-0" and 2 gaps at 1" = 3'-2"	1'-1 3/8"	2 7/8"	7"	1'-10"	6"	10 1/4"	0"	0"	26.1	2.9	0.0	0.0	0.0	0.0	original 4'	B2
	N. End	Type 1	5 Strips x 1'-0" and 4 gaps at 1" = 5'-4"	1'-1 3/8"	2 7/8"	7"	1'-10"	6"	10 1/4"	0"	0"	42.3	4.7	1.2	0.0	3.7	4.8	original 4'	See 1977 Plans
N12.8	S. End	Type 1	3 Strips x 1'-0" and 2 gaps at 1" = 3'-2"	6"	10 1/4"	7"	1'-10"	6"	10 1/4"	0"	0"	26.1	2.9	0.0	0.0	0.0	0.0	1990s 4'	Fixed 1985
	N. End	Type 1	3 Strips x 1'-0" and 2 gaps at 1" = 3'-2"	6"	10 1/4"	7"	1'-10"	6"	10 1/4"	0"	0"	26.1	2.9	0.0	0.0	0.0	0.0	1990s 4'	10-a
N12.9	S. End	Type 1	3 Strips x 1'-0" and 2 gaps at 1" = 3'-2"	6"	10 1/4"	7"	1'-10"	6"	10 1/4"	0"	0"	26.1	2.9	0.0	0.0	0.0	0.0	1990s 4'	Fixed 1985
	N. End	Type 1	3 Strips x 1'-0" and 2 gaps at 1" = 3'-2"	6"	10 1/4"	7"	1'-10"	6"	10 1/4"	0"	0"	26.1	2.9	0.0	0.0	0.0	0.0	1990s 4'	10-a
N12.10	S. End	Type 1	3 Strips x 1'-0" and 2 gaps at 1" = 3'-2"	1'-1 3/8"	2 7/8"	7"	1'-10"	6"	10 1/4"	0"	0"	26.1	2.9	0.0	0.0	0.0	0.0	original 4'	B2
	N. End	Type 1	5 Strips x 1'-0" and 4 gaps at 1" = 5'-4"	1'-1 3/8"	2 7/8"	7"	1'-10"	6"	10 1/4"	0"	0"	42.3	4.7	1.2	0.0	4.6	5.8	original 4'	See 1977 Plans
N12.11	S. End	Type 1	3 Strips x 1'-0" and 2 gaps at 1" = 3'-2"	1'-1 3/8"	2 7/8"	7"	1'-10"	6"	10 1/4"	0"	0"	26.1	2.9	0.0	0.0	0.0	0.0	original 4'	B4
	N. End	Type 1	3 Strips x 1'-0" and 2 gaps at 1" = 3'-2"	1'-1 3/8"	2 7/8"	7"	1'-10"	6"	10 1/4"	0"	0"	26.1	2.9	0.0	0.9	0.0	0.9	original 4'	See 1977 Plans
N12.12	S. End	Type 1	3 Strips x 1'-0" and 2 gaps at 1" = 3'-2"	1'-1 3/8"	2 7/8"	7"	1'-10"	6"	10 1/4"	0"	0"	26.1	2.9	0.0	0.0	0.0	0.0	original 4'	B4
	N. End	Type 1	5 Strips x 1'-0" and 4 gaps at 1" = 5'-4"	1'-1 3/8"	2 7/8"	7"	1'-10"	6"	10 1/4"	0"	0"	42.3	4.7	1.2	1.5	3.7	6.3	original 4'	See 1977 Plans

*For N12.12, H shall extend the full length of the beam (3" from each bearing)

SPAN 13

BEAM	END	REPAIR TYPE	LENGTH	FIBER WRAP DIMENSIONS									ACRYLIC COATING (SQ YD)	PPC I-BEAM REPAIR DIMENSIONS				BEAM SECTION	BEARING TYPE
				A	B	C	D	E	F	G	H	FIBER WRAP (SQ FT)		EAST FACE (SQ FT)	WEST FACE (SQ FT)	BOTTOM FACE (SQ FT)	TOTAL PPC I-BEAM REPAIR (SQ FT)		
N13.1	S. End	Type 1	3 Strips x 1'-0" and 2 gaps at 1" = 3'-2"	6"	10 1/4"	7"	1'-10"	6"	10 1/4"	0"	0"	26.1	2.9	0.0	0.0	0.0	0.0	1990s 4'	Fixed 1985
	N. End	Type 1	3 Strips x 1'-0" and 2 gaps at 1" = 3'-2"	6"	10 1/4"	7"	1'-10"	6"	10 1/4"	0"	0"	26.1	2.9	0.0	0.0	0.0	0.0	1990s 4'	7-a
N13.2	S. End	Type 1	3 Strips x 1'-0" and 2 gaps at 1" = 3'-2"	6"	10 1/4"	7"	1'-10"	6"	10 1/4"	0"	0"	26.1	2.9	0.0	0.0	0.0	0.0	1990s 4'	Fixed 1985
	N. End	Type 1	3 Strips x 1'-0" and 2 gaps at 1" = 3'-2"	6"	10 1/4"	7"	1'-10"	6"	10 1/4"	0"	0"	26.1	2.9	0.0	0.0	0.0	0.0	1990s 4'	7-a
N13.3	S. End	Type 1	3 Strips x 1'-0" and 2 gaps at 1" = 3'-2"	6"	10 1/4"	7"	1'-10"	6"	10 1/4"	0"	0"	26.1	2.9	0.0	0.0	0.0	0.0	1990s 4'	Fixed 1985
	N. End	Type 1	3 Strips x 1'-0" and 2 gaps at 1" = 3'-2"	6"	10 1/4"	7"	1'-10"	6"	10 1/4"	0"	0"	26.1	2.9	0.0	0.0	0.0	0.0	1990s 4'	7-a
N13.4	S. End	Type 1	3 Strips x 1'-0" and 2 gaps at 1" = 3'-2"	1'-1 3/8"	2 7/8"	7"	1'-10"	6"	10 1/4"	0"	0"	26.1	2.9	0.6	0.3	0.0	0.9	original 4'	B4
	N. End	Type 1	4 Strips x 1'-0" and 3 gaps at 1" = 4'-3"	1'-1 3/8"	2 7/8"	7"	1'-10"	6"	10 1/4"	0"	0"	34.2	3.8	0.0	0.0	1.8	1.8	original 4'	See 1977 Plans
N13.5	S. End	Type 1	4 Strips x 1'-0" and 3 gaps at 1" = 4'-3"	1'-1 3/8"	2 7/8"	7"	1'-10"	6"	10 1/4"	0"	0"	34.2	3.8	0.0	0.0	1.8	1.8	original 4'	B4
	N. End	Type 1	3 Strips x 1'-0" and 2 gaps at 1" = 3'-2"	1'-1 3/8"	2 7/8"	7"	1'-10"	6"	10 1/4"	0"	0"	26.1	2.9	0.0	0.0	0.0	0.0	original 4'	See 1977 Plans
N13.6	S. End	Type 1	3 Strips x 1'-0" and 2 gaps at 1" = 3'-2"	1'-1 3/8"	2 7/8"	7"	1'-10"	6"	10 1/4"	0"	0"	26.1	2.9	0.0	0.0	0.0	0.0	original 4'	B4
	N. End	Type 1	4 Strips x 1'-0" and 3 gaps at 1" = 4'-3"	1'-1 3/8"	2 7/8"	7"	1'-10"	6"	10 1/4"	0"	0"	34.2	3.8	0.3	0.0	2.8	3.0	original 4'	See 1977 Plans
N13.7	S. End	Type 4	3 Strips x 1'-0" and 2 gaps at 1" = 3'-2"	2'-3 1/8"	10 1/4"	7"	1'-10"	2'-3 1/8"	10 1/4"	5 7/8"	4"	54.9	6.1	0.0	0.0	0.0	0.0	1990s 4'	Fixed 1985
	N. End	Type 1	3 Strips x 1'-0" and 2 gaps at 1" = 3'-2"	6"	10 1/4"	7"	1'-10"	6"	10 1/4"	0"	0"	26.1	2.9	0.0	0.0	0.0	0.0	1990s 4'	10-a
N13.8	S. End	Type 1	3 Strips x 1'-0" and 2 gaps at 1" = 3'-2"	6"	10 1/4"	7"	1'-10"	6"	10 1/4"	0"	0"	26.1	2.9	0.0	0.0	0.0	0.0	1990s 4'	Fixed 1985
	N. End	Type 1	3 Strips x 1'-0" and 2 gaps at 1" = 3'-2"	6"	10 1/4"	7"	1'-10"	6"	10 1/4"	0"	0"	26.1	2.9	0.0	0.0	0.0	0.0	1990s 4'	10-a
N13.9	S. End	Type 1	4 Strips x 1'-0" and 3 gaps at 1" = 4'-3"	1'-1 3/8"	2 7/8"	7"	1'-10"	6"	10 1/4"	0"	0"	34.2	3.8	0.5	0.9	2.8	4.1	original 4'	B4
	N. End	Type 1	3 Strips x 1'-0" and 2 gaps at 1" = 3'-2"	1'-1 3/8"	2 7/8"	7"	1'-10"	6"	10 1/4"	0"	0"	26.1	2.9	0.1	0.0	0.9	1.1	original 4'	See 1977 Plans
N13.10	S. End	Type 1	3 Strips x 1'-0" and 2 gaps at 1" = 3'-2"	1'-1 3/8"	2 7/8"	7"	1'-10"	6"	10 1/4"	0"	0"	26.1	2.9	0.6	0.6	0.0	1.2	original 4'	B4
	N. End	Type 1	4 Strips x 1'-0" and 3 gaps at 1" = 4'-3"	1'-1 3/8"	2 7/8"	7"	1'-10"	6"	10 1/4"	0"	0"	34.2	3.8	0.4	0.6	1.8	2.8	original 4'	See 1977 Plans
N13.11	S. End	Type 4	3 Strips x 1'-0" and 2 gaps at 1" = 3'-2"	2'-10 1/2"	2 7/8"	7"	1'-10"	2'-3 1/8"	10 1/4"	5 7/8"	4"	56.3	6.3	0.0	0.0	0.0	0.0	original 4'	B4
	N. End	Type 1	3 Strips x 1'-0" and 2 gaps at 1" = 3'-2"	1'-1 3/8"	2 7/8"	7"	1'-10"	6"	10 1/4"	0"	0"	26.1	2.9	0.0	0.0	0.0	0.0	original 4'	See 1977 Plans

SPAN 14

BEAM	END	REPAIR TYPE	LENGTH	FIBER WRAP DIMENSIONS									ACRYLIC COATING (SQ YD)	PPC I-BEAM REPAIR DIMENSIONS				BEAM SECTION	BEARING TYPE
				A	B	C	D	E	F	G	H	FIBER WRAP (SQ FT)		EAST FACE (SQ FT)	WEST FACE (SQ FT)	BOTTOM FACE (SQ FT)	TOTAL PPC I-BEAM REPAIR (SQ FT)		
N14.1	S. End	Type 1	3 Strips x 1'-0" and 2 gaps at 1" = 3'-2"	6"	10 1/4"	7"	1'-10"	6"	10 1/4"	0"	0"	26.1	2.9	0.3	0.0	0.0	0.3	1990s 4'	10-a
	N. End	Type 1	3 Strips x 1'-0" and 2 gaps at 1" = 3'-2"	6"	10 1/4"	7"	1'-10"	6"	10 1/4"	0"	0"	26.1	2.9	0.3	0.0	0.0	0.3	1990s 4'	Fixed 1985
N14.2	S. End	Type 1	3 Strips x 1'-0" and 2 gaps at 1" = 3'-2"	6"	10 1/4"	7"	1'-10"	6"	10 1/4"	0"	0"	26.1	2.9	0.0	0.0	0.0	0.0	1990s 4'	10-a
	N. End	Type 1	3 Strips x 1'-0" and 2 gaps at 1" = 3'-2"	6"	10 1/4"	7"	1'-10"	6"	10 1/4"	0"	0"	26.1	2.9	0.0	0.0	0.0	0.0	1990s 4'	Fixed 1985
N14.3	S. End	Type 1	3 Strips x 1'-0" and 2 gaps at 1" = 3'-2"	6"	10 1/4"	7"	1'-10"	6"	10 1/4"	0"	0"	26.1	2.9	0.0	0.0	0.0	0.0	1990s 4'	10-a
	N. End	Type 1	3 Strips x 1'-0" and 2 gaps at 1" = 3'-2"	6"	10 1/4"	7"	1'-10"	6"	10 1/4"	0"	0"	26.1	2.9	0.0	0.0	0.0	0.0	1990s 4'	Fixed 1985
N14.4	S. End	Type 1	4 Strips x 1'-0" and 3 gaps at 1" = 4'-3"	1'-1 3/8"	2 7/8"	7"	1'-10"	6"	10 1/4"	0"	0"	34.2	3.8	0.3	0.3	2.8	3.3	original 4'	See 1977 Plans
	N. End	Type 1	3 Strips x 1'-0" and 2 gaps at 1" = 3'-2"	1'-1 3/8"	2 7/8"	7"	1'-10"	6"	10 1/4"	0"	0"	26.1	2.9	0.0	0.0	0.9	0.9	original 4'	B2
N14.5	S. End	Type 1	5 Strips x 1'-0" and 4 gaps at 1" = 5'-4"	1'-1 3/8"	2 7/8"	7"	1'-10"	6"	10 1/4"	0"	0"	42.3	4.7	0.3	0.3	3.7	4.3	original 4'	See 1977 Plans
	N. End	Type 1	4 Strips x 1'-0" and 3 gaps at 1" = 4'-3"	1'-1 3/8"	2 7/8"	7"	1'-10"	6"	10 1/4"	0"	0"	34.2	3.8	0.0	0.0	2.8	2.8	original 4'	B2
N14.6	S. End	Type 1	4 Strips x 1'-0" and 3 gaps at 1" = 4'-3"	1'-1 3/8"	2 7/8"	7"	1'-10"	6"	10 1/4"	0"	0"	34.2	3.8	0.6	0.6	1.8	3.0	original 4'	See 1977 Plans
	N. End	Type 1	4 Strips x 1'-0" and 3 gaps at 1" = 4'-3"	1'-1 3/8"	2 7/8"	7"	1'-10"	6"	10 1/4"	0"	0"	34.2	3.8	0.0	0.0	1.8	1.8	original 4'	B2
N14.7	S. End	Type 1	4 Strips x 1'-0" and 3 gaps at 1" = 4'-3"	1'-1 3/8"	2 7/8"	7"	1'-10"	6"	10 1/4"	0"	0"	34.2	3.8	0.3	0.9	2.8	3.9	original 4'	See 1977 Plans
	N. End	Type 1	4 Strips x 1'-0" and 3 gaps at 1" = 4'-3"	1'-1 3/8"	2 7/8"	7"	1'-10"	6"	10 1/4"	0"	0"	34.2	3.8	0.0	0.0	1.8	1.8	original 4'	B2
N14.8	S. End	Type 1	3 Strips x 1'-0" and 2 gaps at 1" = 3'-2"	6"	10 1/4"	7"	1'-10"	6"	10 1/4"	0"	0"	26.1	2.9	0.0	0.0	0.0	0.0	1990s 4'	10-a
	N. End	Type 1	3 Strips x 1'-0" and 2 gaps at 1" = 3'-2"	6"	10 1/4"	7"	1'-10"	6"	10 1/4"	0"	0"	26.1	2.9	0.0	0.0	0.0	0.0	1990s 4'	Fixed 1985
N14.9	S. End	Type 1	3 Strips x 1'-0" and 2 gaps at 1" = 3'-2"	6"	10 1/4"	7"	1'-10"	6"	10 1/4"	0"	0"	26.1	2.9	0.0	0.0	0.0	0.0	1990s 4'	10-a
	N. End	Type 1	3 Strips x 1'-0" and 2 gaps at 1" = 3'-2"	6"	10 1/4"	7"	1'-10"	6"	10 1/4"	0"	0"	26.1	2.9	0.0	0.0	0.0	0.0	1990s 4'	Fixed 1985
N14.10	S. End	Type 1	4 Strips x 1'-0" and 3 gaps at 1" = 4'-3"	1'-1 3/8"	2 7/8"	7"	1'-10"	6"	10 1/4"	0"	0"	34.2	3.8	0.3	0.9	2.8	3.9	original 4'	See 1977 Plans
	N. End	Type 1	4 Strips x 1'-0" and 3 gaps at 1" = 4'-3"	1'-1 3/8"	2 7/8"	7"	1'-10"	6"	10 1/4"	0"	0"	34.2	3.8	0.0	0.0	1.8	1.8	original 4'	B2
N14.11	S. End	Type 1	3 Strips x 1'-0" and 2 gaps at 1" = 3'-2"	1'-1 3/8"	2 7/8"	7"	1'-10"	6"	10 1/4"	0"	0"	26.1	2.9	0.6	0.0	0.9	1.5	original 4'	See 1977 Plans
	N. End	Type 1	4 Strips x 1'-0" and 3 gaps at 1" = 4'-3"	1'-1 3/8"	2 7/8"	7"	1'-10"	6"	10 1/4"	0"	0"	34.2	3.8	0.0	0.0	1.8	1.8	original 4'	B2
N14.12	S. End	Type 1	5 Strips x 1'-0" and 4 gaps at 1" = 5'-4"	1'-1 3/8"	2 7/8"	7"	1'-10"	6"	10 1/4"	0"	0"	42.3	4.7	1.2	0.3	3.7	5.1	original 4'	See 1977 Plans
	N. End	Type 1	4 Strips x 1'-0" and 3 gaps at 1" = 4'-3"	1'-1 3/8"	2 7/8"	7"	1'-10"	6"	10 1/4"	0"	0"	34.2	3.8	0.0	0.0	1.8	1.8	original 4'	B2
N14.13	S. End	Type 1	3 Strips x 1'-0" and 2 gaps at 1" = 3'-2"	1'-1 3/8"	2 7/8"	7"	1'-10"	6"	10 1/4"	0"	0"	26.1	2.9	0.3	0.3	0.9	1.5	original 4'	See 1977 Plans
	N. End	Type 1	4 Strips x 1'-0" and 3 gaps at 1" = 4'-3"	1'-1 3/8"	2 7/8"	7"	1'-10"	6"	10 1/4"	0"	0"	34.2	3.8	0.0	0.6	2.8	3.3	original 4'	B2

SPAN 15

BEAM	END	REPAIR TYPE	LENGTH	FIBER WRAP DIMENSIONS									ACRYLIC COATING (SQ YD)	PPC I-BEAM REPAIR DIMENSIONS				BEAM SECTION	BEARING TYPE
				A	B	C	D	E	F	G	H	FIBER WRAP (SQ FT)		EAST FACE (SQ FT)	WEST FACE (SQ FT)	BOTTOM FACE (SQ FT)	TOTAL PPC I-BEAM REPAIR (SQ FT)		
N15.1	S. End	Type 1	3 Strips x 1'-0" and 2 gaps at 1" = 3'-2"	6"	10 1/4"	7"	1'-10"	6"	10 1/4"	0"	0"	26.1	2.9	0.1	0.0	0.0	0.1	1990s 4'	Fixed 1985
	N. End	Type 1	3 Strips x 1'-0" and 2 gaps at 1" = 3'-2"	6"	10 1/4"	7"	1'-10"	6"	10 1/4"	0"	0"	26.1	2.9	0.0	0.0	0.0	0.0	1990s 4'	10-a
N15.2	S. End	Type 1	3 Strips x 1'-0" and 2 gaps at 1" = 3'-2"	6"	10 1/4"	7"	1'-10"	6"	10 1/4"	0"	0"	26.1	2.9	0.0	0.0	0.0	0.0	1990s 4'	Fixed 1985
	N. End	Type 1	3 Strips x 1'-0" and 2 gaps at 1" = 3'-2"	6"	10 1/4"	7"	1'-10"	6"	10 1/4"	0"	0"	26.1	2.9	0.2	0.0	0.0	0.2	1990s 4'	10-a
N15.3	S. End	Type 1	3 Strips x 1'-0" and 2 gaps at 1" = 3'-2"	6"	10 1/4"	7"	1'-10"	6"	10 1/4"	0"	0"	26.1	2.9	0.0	0.0	0.0	0.0	1990s 4'	Fixed 1985
	N. End	Type 1	3 Strips x 1'-0" and 2 gaps at 1" = 3'-2"	6"	10 1/4"	7"	1'-10"	6"	10 1/4"	0"	0"	26.1	2.9	0.0	0.0	0.0	0.0	1990s 4'	10-a
N15.4	S. End	Type 1	3 Strips x 1'-0" and 2 gaps at 1" = 3'-2"	1'-1 3/8"	2 7/8"	7"	1'-10"	6"	10 1/4"	0"	0"	26.1	2.9	0.0	0.0	0.9	0.9	original 4'	B2
	N. End	Type 1	4 Strips x 1'-0" and 3 gaps at 1" = 4'-3"	1'-1 3/8"	2 7/8"	7"	1'-10"	6"	10 1/4"	0"	0"	34.2	3.8	0.6	1.5	0.9	3.0	original 4'	See 1977 Plans
N15.5	S. End	Type 1	4 Strips x 1'-0" and 3 gaps at 1" = 4'-3"	1'-1 3/8"	2 7/8"	7"	1'-10"	6"	10 1/4"	0"	0"	34.2	3.8	0.0	0.0	2.1	2.1	original 4'	B2
	N. End	Type 1	3 Strips x 1'-0" and 2 gaps at 1" = 3'-2"	1'-1 3/8"	2 7/8"	7"	1'-10"	6"	10 1/4"	0"	0"	26.1	2.9	0.6	0.6	0.9	2.1	original 4'	See 1977 Plans
N15.6	S. End	Type 1	4 Strips x 1'-0" and 3 gaps at 1" = 4'-3"	1'-1 3/8"	2 7/8"	7"	1'-10"	6"	10 1/4"	0"	0"	34.2	3.8	0.0	0.0	2.3	2.3	original 4'	B2
	N. End	Type 1	3 Strips x 1'-0" and 2 gaps at 1" = 3'-2"	1'-1 3/8"	2 7/8"	7"	1'-10"	6"	10 1/4"	0"	0"	26.1	2.9	0.6	0.8	0.9	2.3	original 4'	See 1977 Plans
N15.7	S. End	Type 1	3 Strips x 1'-0" and 2 gaps at 1" = 3'-2"	1'-1 3/8"	2 7/8"	7"	1'-10"	6"	10 1/4"	0"	0"	26.1	2.9	0.0	0.0	1.2	1.2	original 4'	B2
	N. End	Type 1	3 Strips x 1'-0" and 2 gaps at 1" = 3'-2"	1'-1 3/8"	2 7/8"	7"	1'-10"	6"	10 1/4"	0"	0"	26.1	2.9	0.3	1.1	0.9	2.3	original 4'	See 1977 Plans
N15.8	S. End	Type 1	3 Strips x 1'-0" and 2 gaps at 1" = 3'-2"	6"	10 1/4"	7"	1'-10"	6"	10 1/4"	0"	0"	26.1	2.9	0.0	0.0	0.8	0.8	1990s 4'	Fixed 1985
	N. End	Type 1	3 Strips x 1'-0" and 2 gaps at 1" = 3'-2"	6"	10 1/4"	7"	1'-10"	6"	10 1/4"	0"	0"	26.1	2.9	0.0	0.0	0.0	0.0	1990s 4'	10-a
N15.9	S. End	Type 1	3 Strips x 1'-0" and 2 gaps at 1" = 3'-2"	6"	10 1/4"	7"	1'-10"	6"	10 1/4"	0"	0"	26.1	2.9	0.0	0.0	0.0	0.0	1990s 4'	Fixed 1985
	N. End	Type 1	3 Strips x 1'-0" and 2 gaps at 1" = 3'-2"	6"	10 1/4"	7"	1'-10"	6"	10 1/4"	0"	0"	26.1	2.9	0.0	0.0	0.0	0.0	1990s 4'	10-a
N15.10	S. End	Type 1	3 Strips x 1'-0" and 2 gaps at 1" = 3'-2"	1'-1 3/8"	2 7/8"	7"	1'-10"	6"	10 1/4"	0"	0"	26.1	2.9	0.0	0.0	0.6	0.6	original 4'	B2
	N. End	Type 1	3 Strips x 1'-0" and 2 gaps at 1" = 3'-2"	1'-1 3/8"	2 7/8"	7"	1'-10"	6"	10 1/4"	0"	0"	26.1	2.9	0.6	0.7	0.9	2.2	original 4'	See 1977 Plans
N15.11	S. End	Type 1	3 Strips x 1'-0" and 2 gaps at 1" = 3'-2"	1'-1 3/8"	2 7/8"	7"	1'-10"	6"	10 1/4"	0"	0"	26.1	2.9	0.0	0.0	0.0	0.0	original 4'	B2
	N. End	Type 1	3 Strips x 1'-0" and 2 gaps at 1" = 3'-2"	1'-1 3/8"	2 7/8"	7"	1'-10"	6"	10 1/4"	0"	0"	26.1	2.9	0.9	0.6	0.9	2.4	original 4'	See 1977 Plans
N15.12	S. End	Type 1	3 Strips x 1'-0" and 2 gaps at 1" = 3'-2"	1'-1 3/8"	2 7/8"	7"	1'-10"	6"	10 1/4"	0"	0"	26.1	2.9	0.0	0.0	0.0	0.0	original 4'	B2
	N. End	Type 1	3 Strips x 1'-0" and 2 gaps at 1" = 3'-2"	1'-1 3/8"	2 7/8"	7"	1'-10"	6"	10 1/4"	0"	0"	26.1	2.9	0.2	0.5	0.9	1.6	original 4'	See 1977 Plans
N15.13	S. End	Type 1	4 Strips x 1'-0" and 3 gaps at 1" = 4'-3"	1'-1 3/8"	2 7/8"	7"	1'-10"	6"	10 1/4"	0"	0"	34.2	3.8	0.0	0.7	2.8	3.4	original 4'	B2
	N. End	Type 1	3 Strips x 1'-0" and 2 gaps at 1" = 3'-2"	1'-1 3/8"	2 7/8"	7"	1'-10"	6"	10 1/4"	0"	0"	26.1	2.9	0.3	0.4	0.9	1.6	original 4'	See 1977 Plans

SPAN 16

BEAM	END	REPAIR TYPE	LENGTH	FIBER WRAP DIMENSIONS									ACRYLIC COATING (SQ YD)	PPC I-BEAM REPAIR DIMENSIONS				BEAM SECTION	BEARING TYPE
				A	B	C	D	E	F	G	H	FIBER WRAP (SQ FT)		EAST FACE (SQ FT)	WEST FACE (SQ FT)	BOTTOM FACE (SQ FT)	TOTAL PPC I-BEAM REPAIR (SQ FT)		
N16.1	S. End	Type 1	3 Strips x 1'-0" and 2 gaps at 1" = 3'-2"	6"	10 1/4"	7"	1'-10"	6"	10 1/4"	0"	0"	26.1	2.9	0.3	0.0	0.0	0.3	1990s 4'	10-a
	N. End	Type 2	3 Strips x 1'-0" and 2 gaps at 1" = 3'-2"	10 1/2"	10 1/4"	7"	1'-10"	10 1/2"	10 1/4"	0"	0"	35.0	3.9	0.4	0.0	0.0	0.4	1990s 4'	Fixed 1985
N16.2	S. End	Type 1	3 Strips x 1'-0" and 2 gaps at 1" = 3'-2"	6"	10 1/4"	7"	1'-10"	6"	10 1/4"	0"	0"	26.1	2.9	0.0	0.0	0.0	0.0	1990s 4'	10-a
	N. End	Type 1	3 Strips x 1'-0" and 2 gaps at 1" = 3'-2"	6"	10 1/4"	7"	1'-10"	6"	10 1/4"	0"	0"	26.1	2.9	0.0	0.0	0.0	0.0	1990s 4'	Fixed 1985
N16.3	S. End	Type 2	5 Strips x 1'-0" and 4 gaps at 1" = 5'-4"	10 1/2"	10 1/4"	7"	1'-10"	10 1/2"	10 1/4"	0"	0"	56.3	6.3	2.0	0.0	0.0	2.0	1990s 4'	10-a
	N. End	Type 2	5 Strips x 1'-0" and 4 gaps at 1" = 5'-4"	10 1/2"	10 1/4"	7"	1'-10"	10 1/2"	10 1/4"	0"	0"	56.3	6.3	0.0	1.8	1.2	3.0	1990s 4'	Fixed 1985
N16.4	S. End	Type 1	4 Strips x 1'-0" and 3 gaps at 1" = 4'-3"	1'-1 3/8"	2 7/8"	7"	1'-10"	6"	10 1/4"	0"	0"	34.2	3.8	0.3	0.6	2.4	3.4	original 4'	See 1977 Plans
	N. End	Type 1	4 Strips x 1'-0" and 3 gaps at 1" = 4'-3"	1'-1 3/8"	2 7/8"	7"	1'-10"	6"	10 1/4"	0"	0"	34.2	3.8	0.9	0.6	1.5	3.0	original 4'	B2
N16.5	S. End	Type 1	3 Strips x 1'-0" and 2 gaps at 1" = 3'-2"	1'-1 3/8"	2 7/8"	7"	1'-10"	6"	10 1/4"	0"	0"	26.1	2.9	0.6	0.3	0.0	0.9	original 4'	See 1977 Plans
	N. End	Type 1	4 Strips x 1'-0" and 3 gaps at 1" = 4'-3"	1'-1 3/8"	2 7/8"	7"	1'-10"	6"	10 1/4"	0"	0"	34.2	3.8	0.3	0.2	2.8	3.2	original 4'	B2
N16.6	S. End	Type 1	3 Strips x 1'-0" and 2 gaps at 1" = 3'-2"	1'-1 3/8"	2 7/8"	7"	1'-10"	6"	10 1/4"	0"	0"	26.1	2.9	0.4	1.2	0.0	1.6	original 4'	See 1977 Plans
	N. End	Type 1	4 Strips x 1'-0" and 3 gaps at 1" = 4'-3"	1'-1 3/8"	2 7/8"	7"	1'-10"	6"	10 1/4"	0"	0"	34.2	3.8	0.3	0.3	1.5	2.1	original 4'	B2
N16.7	S. End	Type 1	3 Strips x 1'-0" and 2 gaps at 1" = 3'-2"	1'-1 3/8"	2 7/8"	7"	1'-10"	6"	10 1/4"	0"	0"	26.1	2.9	0.2	0.5	0.6	1.3	original 4'	See 1977 Plans
	N. End	Type 1	3 Strips x 1'-0" and 2 gaps at 1" = 3'-2"	1'-1 3/8"	2 7/8"	7"	1'-10"	6"	10 1/4"	0"	0"	26.1	2.9	0.2	0.6	0.9	1.7	original 4'	B2
N16.8	S. End	Type 1	3 Strips x 1'-0" and 2 gaps at 1" = 3'-2"	6"	10 1/4"	7"	1'-10"	6"	10 1/4"	0"	0"	26.1	2.9	0.0	0.0	0.0	0.0	1990s 4'	10-a
	N. End	Type 1	3 Strips x 1'-0" and 2 gaps at 1" = 3'-2"	6"	10 1/4"	7"	1'-10"	6"	10 1/4"	0"	0"	26.1	2.9	0.0	0.0	0.9	0.9	1990s 4'	Fixed 1985
N16.9	S. End	Type 1	3 Strips x 1'-0" and 2 gaps at 1" = 3'-2"	6"	10 1/4"	7"	1'-10"	6"	10 1/4"	0"	0"	26.1	2.9	0.0	0.0	0.0	0.0	1990s 4'	10-a
	N. End	Type 1	3 Strips x 1'-0" and 2 gaps at 1" = 3'-2"	6"	10 1/4"	7"	1'-10"	6"	10 1/4"	0"	0"	26.1	2.9	0.0	0.1	0.0	0.1	1990s 4'	Fixed 1985
N16.10	S. End	Type 1	3 Strips x 1'-0" and 2 gaps at 1" = 3'-2"	1'-1 3/8"	2 7/8"	7"	1'-10"	6"	10 1/4"	0"	0"	26.1	2.9	0.3	0.6	0.9	1.8	original 4'	See 1977 Plans
	N. End	Type 1	3 Strips x 1'-0" and 2 gaps at 1" = 3'-2"	1'-1 3/8"	2 7/8"	7"	1'-10"	6"	10 1/4"	0"	0"	26.1	2.9	0.6	0.7	0.0	1.3	original 4'	B2
N16.11	S. End	Type 1	3 Strips x 1'-0" and 2 gaps at 1" = 3'-2"	1'-1 3/8"	2 7/8"	7"	1'-10"	6"	10 1/4"	0"	0"	26.1	2.9	0.6	0.6	0.6	1.8	original 4'	See 1977 Plans
	N. End	Type 1	4 Strips x 1'-0" and 3 gaps at 1" = 4'-3"	1'-1 3/8"	2 7/8"	7"	1'-10"	6"	10 1/4"	0"	0"	34.2	3.8	0.6	0.6	1.5	2.7	original 4'	B2
N16.12	S. End	Type 1	3 Strips x 1'-0" and 2 gaps at 1" = 3'-2"	1'-1 3/8"	2 7/8"	7"	1'-10"	6"	10 1/4"	0"	0"	26.1	2.9	0.6	0.6	0.9	2.1	original 4'	See 1977 Plans
	N. End	Type 1	4 Strips x 1'-0" and 3 gaps at 1" = 4'-3"	1'-1 3/8"	2 7/8"	7"	1'-10"	6"	10 1/4"	0"	0"	34.2	3.8	0.3	0.6	1.5	2.4	original 4'	B2
N16.13	S. End	Type 1	3 Strips x 1'-0" and 2 gaps at 1" = 3'-2"	1'-1 3/8"	2 7/8"	7"	1'-10"	6"	10 1/4"	0"	0"	26.1	2.9	0.2	0.0	0.6	0.8	original 4'	See 1977 Plans
	N. End	Type 1	3 Strips x 1'-0" and 2 gaps at 1" = 3'-2"	1'-1 3/8"	2 7/8"	7"	1'-10"	6"	10 1/4"	0"	0"	26.1	2.9	0.6	1.2	0.0	1.8	original 4'	B2

SPAN 17

BEAM	END	REPAIR TYPE	LENGTH	FIBER WRAP DIMENSIONS									ACRYLIC COATING (SQ YD)	PPC I-BEAM REPAIR DIMENSIONS				BEAM SECTION	BEARING TYPE
				A	B	C	D	E	F	G	H	FIBER WRAP (SQ FT)		EAST FACE (SQ FT)	WEST FACE (SQ FT)	BOTTOM FACE (SQ FT)	TOTAL PPC I-BEAM REPAIR (SQ FT)		
N17.1	S. End	Type 1	3 Strips x 1'-0" and 2 gaps at 1" = 3'-2"	6"	10 1/4"	7"	1'-10"	6"	10 1/4"	0"	0"	26.1	2.9	0.3	0.0	0.3	0.6	1990s 4'	10-a
	N. End	Type 1	3 Strips x 1'-0" and 2 gaps at 1" = 3'-2"	6"	10 1/4"	7"	1'-10"	6"	10 1/4"	0"	0"	26.1	2.9	0.3	0.0	0.0	0.3	1990s 4'	Fixed 1985
N17.2	S. End	Type 1	3 Strips x 1'-0" and 2 gaps at 1" = 3'-2"	6"	10 1/4"	7"	1'-10"	6"	10 1/4"	0"	0"	26.1	2.9	0.0	0.1	0.0	0.1	1990s 4'	10-a
	N. End	Type 1	3 Strips x 1'-0" and 2 gaps at 1" = 3'-2"	6"	10 1/4"	7"	1'-10"	6"	10 1/4"	0"	0"	26.1	2.9	0.0	0.0	0.0	0.0	1990s 4'	Fixed 1985
N17.3	S. End	Type 1	3 Strips x 1'-0" and 2 gaps at 1" = 3'-2"	6"	10 1/4"	7"	1'-10"	6"	10 1/4"	0"	0"	26.1	2.9	0.0	0.0	0.0	0.0	1990s 4'	10-a
	N. End	Type 1	3 Strips x 1'-0" and 2 gaps at 1" = 3'-2"	6"	10 1/4"	7"	1'-10"	6"	10 1/4"	0"	0"	26.1	2.9	0.0	0.0	0.3	0.3	1990s 4'	Fixed 1985
N17.4	S. End	Type 1	3 Strips x 1'-0" and 2 gaps at 1" = 3'-2"	1'-1 3/8"	2 7/8"	7"	1'-10"	6"	10 1/4"	0"	0"	26.1	2.9	1.1	0.6	0.9	2.6	original 4'	See 1977 Plans
	N. End	Type 1	3 Strips x 1'-0" and 2 gaps at 1" = 3'-2"	1'-1 3/8"	2 7/8"	7"	1'-10"	6"	10 1/4"	0"	0"	26.1	2.9	0.6	0.6	1.2	2.4	original 4'	B2
N17.5	S. End	Type 1	3 Strips x 1'-0" and 2 gaps at 1" = 3'-2"	1'-1 3/8"	2 7/8"	7"	1'-10"	6"	10 1/4"	0"	0"	26.1	2.9	0.7	0.2	0.0	0.9	original 4'	See 1977 Plans
	N. End	Type 1	3 Strips x 1'-0" and 2 gaps at 1" = 3'-2"	1'-1 3/8"	2 7/8"	7"	1'-10"	6"	10 1/4"	0"	0"	26.1	2.9	0.2	0.2	0.9	1.4	original 4'	B2
N17.6	S. End	Type 1	3 Strips x 1'-0" and 2 gaps at 1" = 3'-2"	1'-1 3/8"	2 7/8"	7"	1'-10"	6"	10 1/4"	0"	0"	26.1	2.9	0.3	0.7	0.0	1.0	original 4'	See 1977 Plans
	N. End	Type 1	3 Strips x 1'-0" and 2 gaps at 1" = 3'-2"	1'-1 3/8"	2 7/8"	7"	1'-10"	6"	10 1/4"	0"	0"	26.1	2.9	0.6	0.2	0.0	0.8	original 4'	B2
N17.7	S. End	Type 1	3 Strips x 1'-0" and 2 gaps at 1" = 3'-2"	1'-1 3/8"	2 7/8"	7"	1'-10"	6"	10 1/4"	0"	0"	26.1	2.9	0.2	0.2	0.0	0.4	original 4'	See 1977 Plans
	N. End	Type 1	3 Strips x 1'-0" and 2 gaps at 1" = 3'-2"	1'-1 3/8"	2 7/8"	7"	1'-10"	6"	10 1/4"	0"	0"	26.1	2.9	0.9	0.6	1.2	2.7	original 4'	B2
N17.8	S. End	Type 1	3 Strips x 1'-0" and 2 gaps at 1" = 3'-2"	1'-1 3/8"	2 7/8"	7"	1'-10"	6"	10 1/4"	0"	0"	26.1	2.9	0.2	0.0	0.0	0.2	original 4'	See 1977 Plans
	N. End	Type 1	3 Strips x 1'-0" and 2 gaps at 1" = 3'-2"	1'-1 3/8"	2 7/8"	7"	1'-10"	6"	10 1/4"	0"	0"	26.1	2.9	0.3	0.6	0.0	0.9	original 4'	B2
N17.9	S. End	Type 1	3 Strips x 1'-0" and 2 gaps at 1" = 3'-2"	6"	10 1/4"	7"	1'-10"	6"	10 1/4"	0"	0"	26.1	2.9	0.0	0.0	0.0	0.0	1990s 4'	10-a
	N. End	Type 1	3 Strips x 1'-0" and 2 gaps at 1" = 3'-2"	6"	10 1/4"	7"	1'-10"	6"	10 1/4"	0"	0"	26.1	2.9	0.0	0.0	0.0	0.0	1990s 4'	Fixed 1985

SPAN 18

BEAM	END	REPAIR TYPE	LENGTH	FIBER WRAP DIMENSIONS									ACRYLIC COATING (SQ YD)	PPC I-BEAM REPAIR DIMENSIONS				BEAM SECTION	BEARING TYPE
				A	B	C	D	E	F	G	H	FIBER WRAP (SQ FT)		EAST FACE (SQ FT)	WEST FACE (SQ FT)	BOTTOM FACE (SQ FT)	TOTAL PPC I-BEAM REPAIR (SQ FT)		
N18.1	S. End	Type 1	3 Strips x 1'-0" and 2 gaps at 1" = 3'-2"	6"	10 1/4"	7"	1'-10"	6"	10 1/4"	0"	0"	26.1	2.9	0.0	0.0	0.0	0.0	1990s 4'	Fixed 1985
	N. End	Type 1	3 Strips x 1'-0" and 2 gaps at 1" = 3'-2"	6"	10 1/4"	7"	1'-10"	6"	10 1/4"	0"	0"	26.1	2.9	0.0	0.2	0.0	0.2	1990s 4'	10-a
N18.2	S. End	Type 1	3 Strips x 1'-0" and 2 gaps at 1" = 3'-2"	6"	10 1/4"	7"	1'-10"	6"	10 1/4"	0"	0"	26.1	2.9	0.0	0.1	0.0	0.1	1990s 4'	Fixed 1985
	N. End	Type 1	3 Strips x 1'-0" and 2 gaps at 1" = 3'-2"	6"	10 1/4"	7"	1'-10"	6"	10 1/4"	0"	0"	26.1	2.9	0.0	0.0	0.0	0.0	1990s 4'	10-a
N18.3	S. End	Type 1	3 Strips x 1'-0" and 2 gaps at 1" = 3'-2"	6"	10 1/4"	7"	1'-10"	6"	10 1/4"	0"	0"	26.1	2.9	0.1	0.1	0.0	0.2	1990s 4'	Fixed 1985
	N. End	Type 1	3 Strips x 1'-0" and 2 gaps at 1" = 3'-2"	6"	10 1/4"	7"	1'-10"	6"	10 1/4"	0"	0"	26.1	2.9	0.0	0.0	0.9	0.9	1990s 4'	10-a
N18.4	S. End	Type 1	3 Strips x 1'-0" and 2 gaps at 1" = 3'-2"	1'-1 3/8"	2 7/8"	7"	1'-10"	6"	10 1/4"	0"	0"	26.1	2.9	0.3	0.6	1.2	2.1	original 4'	B2
	N. End*	Type 1	4 Strips x 1'-0" and 3 gaps at 1" = 4'-3"	1'-1 3/8"	2 7/8"	7"	1'-10"	6"	10 1/4"	0"	0"	34.2	3.8	1.4	0.0	1.8	3.2	original 4'	See 1977 Plans

* Note FRP strips at N18.4, North End may be modified at the sway frame connection, subject to the approval of the Engineer. For sway frame connection details, see Sheet S03A-114.

SPAN 21

BEAM	END	REPAIR TYPE	LENGTH	FIBER WRAP DIMENSIONS									ACRYLIC COATING (SQ YD)	PPC I-BEAM REPAIR DIMENSIONS				BEAM SECTION	BEARING TYPE
				A	B	C	D	E	F	G	H	FIBER WRAP (SQ FT)		EAST FACE (SQ FT)	WEST FACE (SQ FT)	BOTTOM FACE (SQ FT)	TOTAL PPC I-BEAM REPAIR (SQ FT)		
N21.5	S. End	Type 1	3 Strips x 1'-0" and 2 gaps at 1" = 3'-2"	6"	10 1/4"	7"	1'-10"	6"	10 1/4"	0"	0"	26.1	2.9	0.0	0.0	0.0	0.0	1990s 4'	Fixed 1985
	N. End	Type 1	3 Strips x 1'-0" and 2 gaps at 1" = 3'-2"	6"	10 1/4"	7"	1'-10"	6"	10 1/4"	0"	0"	26.1	2.9	0.0	0.0	0.0	0.0	1990s 4'	10-b
N21.6	S. End	Type 1	3 Strips x 1'-0" and 2 gaps at 1" = 3'-2"	1'-1 3/8"	2 7/8"	7"	1'-10"	6"	10 1/4"	0"	0"	26.1	2.9	0.0	0.0	0.0	0.0	original 4'	B2
	N. End	Type 1	3 Strips x 1'-0" and 2 gaps at 1" = 3'-2"	1'-1 3/8"	2 7/8"	7"	1'-10"	6"	10 1/4"	0"	0"	26.1	2.9	0.1	0.1	0.0	0.3	original 4'	See 1977 Plans
N21.7	S. End	Type 1	3 Strips x 1'-0" and 2 gaps at 1" = 3'-2"	1'-1 3/8"	2 7/8"	7"	1'-10"	6"	10 1/4"	0"	0"	26.1	2.9	0.0	0.0	0.0	0.0	original 4'	B2
	N. End	Type 1	3 Strips x 1'-0" and 2 gaps at 1" = 3'-2"	1'-1 3/8"	2 7/8"	7"	1'-10"	6"	10 1/4"	0"	0"	26.1	2.9	0.1	0.1	0.3	0.5	original 4'	See 1977 Plans
N21.8	S. End	Type 1	4 Strips x 1'-0" and 3 gaps at 1" = 4'-3"	1'-1 3/8"	2 7/8"	7"	1'-10"	6"	10 1/4"	0"	0"	34.2	3.8	0.1	0.1	2.3	2.6	original 4'	B2
	N. End	Type 1	3 Strips x 1'-0" and 2 gaps at 1" = 3'-2"	1'-1 3/8"	2 7/8"	7"	1'-10"	6"	10 1/4"	0"	0"	26.1	2.9	0.1	0.0	0.9	1.1	original 4'	See 1977 Plans
N21.9	S. End	Type 1	3 Strips x 1'-0" and 2 gaps at 1" = 3'-2"	1'-1 3/8"	2 7/8"	7"	1'-10"	6"	10 1/4"	0"	0"	26.1	2.9	0.0	0.0	0.0	0.0	original 4'	B2
	N. End	Type 4	3 Strips x 1'-0" and 2 gaps at 1" = 3'-2"	2'-10 1/2"	2 7/8"	7"	1'-10"	2'-3 1/8"	10 1/4"	5 7/8"	4"	56.3	6.3	0.0	0.0	0.0	0.0	original 4'	See 1977 Plans

SPAN 23

BEAM	END	REPAIR TYPE	LENGTH	FIBER WRAP DIMENSIONS									ACRYLIC COATING (SQ YD)	PPC I-BEAM REPAIR DIMENSIONS				BEAM SECTION	BEARING TYPE
				A	B	C	D	E	F	G	H	FIBER WRAP (SQ FT)		EAST FACE (SQ FT)	WEST FACE (SQ FT)	BOTTOM FACE (SQ FT)	TOTAL PPC I-BEAM REPAIR (SQ FT)		
N23.1	S. End	Type 1	6 Strips x 1'-0" and 5 gaps at 1" = 6'-5"	1'-1 3/8"	2 7/8"	7"	1'-10"	6"	10 1/4"	0"	0"	50.4	5.6	0.0	1.9	5.5	7.4	original 4'	See 1977 Plans
	N. End	Type 1	3 Strips x 1'-0" and 2 gaps at 1" = 3'-2"	1'-1 3/8"	2 7/8"	7"	1'-10"	6"	10 1/4"	0"	0"	26.1	2.9	0.0	1.0	0.0	1.0	original 4'	B4
N23.2	S. End	Type 1	4 Strips x 1'-0" and 3 gaps at 1" = 4'-3"	1'-1 3/8"	2 7/8"	7"	1'-10"	6"	10 1/4"	0"	0"	34.2	3.8	0.0	0.3	1.8	2.1	original 4'	See 1977 Plans
	N. End	Type 1	3 Strips x 1'-0" and 2 gaps at 1" = 3'-2"	1'-1 3/8"	2 7/8"	7"	1'-10"	6"	10 1/4"	0"	0"	26.1	2.9	0.0	1.0	0.0	1.0	original 4'	B4
N23.3	S. End	Type 1	5 Strips x 1'-0" and 4 gaps at 1" = 5'-4"	1'-1 3/8"	2 7/8"	7"	1'-10"	6"	10 1/4"	0"	0"	42.3	4.7	0.0	1.9	0.0	1.9	original 4'	See 1977 Plans
	N. End	Type 1	3 Strips x 1'-0" and 2 gaps at 1" = 3'-2"	1'-1 3/8"	2 7/8"	7"	1'-10"	6"	10 1/4"	0"	0"	26.1	2.9	0.0	1.0	0.0	1.0	original 4'	B4
N23.4	S. End	Type 1	3 Strips x 1'-0" and 2 gaps at 1" = 3'-2"	1'-1 3/8"	2 7/8"	7"	1'-10"	6"	10 1/4"	0"	0"	26.1	2.9	0.0	0.0	0.0	0.0	original 4'	See 1977 Plans
	N. End	Type 1	4 Strips x 1'-0" and 3 gaps at 1" = 4'-3"	1'-1 3/8"	2 7/8"	7"	1'-10"	6"	10 1/4"	0"	0"	34.2	3.8	0.3	0.0	3.1	3.4	original 4'	B2
N23.5	S. End	Type 1	3 Strips x 1'-0" and 2 gaps at 1" = 3'-2"	6"	10 1/4"	7"	1'-10"	6"	10 1/4"	0"	0"	26.1	2.9	0.0	0.0	0.0	0.0	1990s 4'	10-b
	N. End	Type 1	3 Strips x 1'-0" and 2 gaps at 1" = 3'-2"	6"	10 1/4"	7"	1'-10"	6"	10 1/4"	0"	0"	26.1	2.9	0.0	0.0	0.0	0.0	1990s 4'	Fixed 1985
N23.6	S. End	Type 1	3 Strips x 1'-0" and 2 gaps at 1" = 3'-2"	6"	10 1/4"	7"	1'-10"	6"	10 1/4"	0"	0"	26.1	2.9	0.0	0.0	0.0	0.0	1990s 4'	10-b
	N. End	Type 1	3 Strips x 1'-0" and 2 gaps at 1" = 3'-2"	6"	10 1/4"	7"	1'-10"	6"	10 1/4"	0"	0"	26.1	2.9	0.0	0.0	0.0	0.0	1990s 4'	Fixed 1985
N23.7	S. End	Type 1	3 Strips x 1'-0" and 2 gaps at 1" = 3'-2"	1'-1 3/8"	2 7/8"	7"	1'-10"	6"	10 1/4"	0"	0"	26.1	2.9	0.0	0.0	0.0	0.0	original 4'	See 1977 Plans
	N. End	Type 1	3 Strips x 1'-0" and 2 gaps at 1" = 3'-2"	1'-1 3/8"	2 7/8"	7"	1'-10"	6"	10 1/4"	0"	0"	26.1	2.9	0.0	0.0	0.9	0.9	original 4'	B2
N23.8	S. End	Type 1	3 Strips x 1'-0" and 2 gaps at 1" = 3'-2"	1'-1 3/8"	2 7/8"	7"	1'-10"	6"	10 1/4"	0"	0"	26.1	2.9	0.0	0.0	0.0	0.0	original 4'	See 1977 Plans
	N. End	Type 1	3 Strips x 1'-0" and 2 gaps at 1" = 3'-2"	1'-1 3/8"	2 7/8"	7"	1'-10"	6"	10 1/4"	0"	0"	26.1	2.9	0.0	0.0	0.9	0.9	original 4'	B2
N23.9	S. End	Type 1	4 Strips x 1'-0" and 3 gaps at 1" = 4'-3"	1'-1 3/8"	2 7/8"	7"	1'-10"	6"	10 1/4"	0"	0"	34.2	3.8	0.3	0.0	1.8	2.1	original 4'	See 1977 Plans
	N. End	Type 1	4 Strips x 1'-0" and 3 gaps at 1" = 4'-3"	1'-1 3/8"	2 7/8"	7"	1'-10"	6"	10 1/4"	0"	0"	34.2	3.8	0.1	0.0	1.8	2.0	original 4'	B2
N23.10	S. End	Type 1	5 Strips x 1'-0" and 4 gaps at 1" = 5'-4"	1'-1 3/8"	2 7/8"	7"	1'-10"	6"	10 1/4"	0"	0"	42.3	4.7	0.0	1.9	0.0	1.9	original 4'	See 1977 Plans
	N. End	Type 1	3 Strips x 1'-0" and 2 gaps at 1" = 3'-2"	1'-1 3/8"	2 7/8"	7"	1'-10"	6"	10 1/4"	0"	0"	26.1	2.9	0.0	1.0	0.9	1.9	original 4'	B2

SPAN 24

BEAM	END	REPAIR TYPE	LENGTH	FIBER WRAP DIMENSIONS									ACRYLIC COATING (SQ YD)	PPC I-BEAM REPAIR DIMENSIONS				BEAM SECTION	BEARING TYPE
				A	B	C	D	E	F	G	H	FIBER WRAP (SQ FT)		EAST FACE (SQ FT)	WEST FACE (SQ FT)	BOTTOM FACE (SQ FT)	TOTAL PPC I-BEAM REPAIR (SQ FT)		
N24.1	S. End	Type 1	3 Strips x 1'-0" and 2 gaps at 1" = 3'-2"	6"	10 1/4"	7"	1'-10"	6"	10 1/4"	0"	0"	26.1	2.9	0.0	0.0	0.0	0.0	1990s 4'	Fixed 1985
	N. End	Type 1	3 Strips x 1'-0" and 2 gaps at 1" = 3'-2"	6"	10 1/4"	7"	1'-10"	6"	10 1/4"	0"	0"	26.1	2.9	0.0	0.0	0.0	0.0	1990s 4'	10-b
N24.2	S. End	Type 2	3 Strips x 1'-0" and 2 gaps at 1" = 3'-2"	10 1/2"	10 1/4"	7"	1'-10"	10 1/2"	10 1/4"	0"	0"	35.0	3.9	0.3	0.0	0.0	0.3	1990s 4'	Fixed 1985
	N. End	Type 1	3 Strips x 1'-0" and 2 gaps at 1" = 3'-2"	6"	10 1/4"	7"	1'-10"	6"	10 1/4"	0"	0"	26.1	2.9	0.0	0.0	0.0	0.0	1990s 4'	10-b
N24.3	S. End	Type 1	3 Strips x 1'-0" and 2 gaps at 1" = 3'-2"	1'-1 3/8"	2 7/8"	7"	1'-10"	6"	10 1/4"	0"	0"	26.1	2.9	0.5	0.7	0.9	2.1	original 4'	B2
	N. End	Type 1	3 Strips x 1'-0" and 2 gaps at 1" = 3'-2"	1'-1 3/8"	2 7/8"	7"	1'-10"	6"	10 1/4"	0"	0"	26.1	2.9	0.2	0.2	0.9	1.4	original 4'	See 1977 Plans
N24.4	S. End	Type 1	3 Strips x 1'-0" and 2 gaps at 1" = 3'-2"	1'-1 3/8"	2 7/8"	7"	1'-10"	6"	10 1/4"	0"	0"	26.1	2.9	0.5	0.3	0.9	1.7	original 4'	B2
	N. End	Type 1	5 Strips x 1'-0" and 4 gaps at 1" = 5'-4"	1'-1 3/8"	2 7/8"	7"	1'-10"	6"	10 1/4"	0"	0"	42.3	4.7	0.2	0.2	3.7	4.2	original 4'	See 1977 Plans
N24.5	S. End	Type 2	3 Strips x 1'-0" and 2 gaps at 1" = 3'-2"	1'-5 7/8"	2 7/8"	7"	1'-10"	10 1/2"	10 1/4"	0"	0"	35.7	4.0	0.5	0.5	1.4	2.3	original 4'	B2
	N. End	Type 1	5 Strips x 1'-0" and 4 gaps at 1" = 5'-4"	1'-1 3/8"	2 7/8"	7"	1'-10"	6"	10 1/4"	0"	0"	42.3	4.7	2.1	1.3	1.8	5.2	original 4'	See 1977 Plans
N24.6	S. End	Type 1	3 Strips x 1'-0" and 2 gaps at 1" = 3'-2"	1'-1 3/8"	2 7/8"	7"	1'-10"	6"	10 1/4"	0"	0"	26.1	2.9	0.2	0.2	0.9	1.4	original 4'	B2
	N. End	Type 1	3 Strips x 1'-0" and 2 gaps at 1" = 3'-2"	1'-1 3/8"	2 7/8"	7"	1'-10"	6"	10 1/4"	0"	0"	26.1	2.9	0.2	0.2	1.4	1.9	original 4'	See 1977 Plans
N24.7	S. End	Type 1	3 Strips x 1'-0" and 2 gaps at 1" = 3'-2"	1'-1 3/8"	2 7/8"	7"	1'-10"	6"	10 1/4"	0"	0"	26.1	2.9	0.2	0.2	0.9	1.4	original 4'	B2
	N. End	Type 1	4 Strips x 1'-0" and 3 gaps at 1" = 4'-3"	1'-1 3/8"	2 7/8"	7"	1'-10"	6"	10 1/4"	0"	0"	34.2	3.8	0.2	0.2	1.8	2.3	original 4'	See 1977 Plans
N24.8	S. End	Type 1	3 Strips x 1'-0" and 2 gaps at 1" = 3'-2"	1'-1 3/8"	2 7/8"	7"	1'-10"	6"	10 1/4"	0"	0"	26.1	2.9	0.2	0.2	0.9	1.4	original 4'	B2
	N. End	Type 1	4 Strips x 1'-0" and 3 gaps at 1" = 4'-3"	1'-1 3/8"	2 7/8"	7"	1'-10"	6"	10 1/4"	0"	0"	34.2	3.8	0.2	0.2	1.8	2.3	original 4'	See 1977 Plans
N24.9	S. End	Type 1	4 Strips x 1'-0" and 3 gaps at 1" = 4'-3"	1'-1 3/8"	2 7/8"	7"	1'-10"	6"	10 1/4"	0"	0"	34.2	3.8	0.2	0.5	1.8	2.6	original 4'	B2
	N. End	Type 1	3 Strips x 1'-0" and 2 gaps at 1" = 3'-2"	1'-1 3/8"	2 7/8"	7"	1'-10"	6"	10 1/4"	0"	0"	26.1	2.9	0.2	0.2	1.4	1.9	original 4'	See 1977 Plans
N24.10	S. End	Type 1	4 Strips x 1'-0" and 3 gaps at 1" = 4'-3"	1'-1 3/8"	2 7/8"	7"	1'-10"	6"	10 1/4"	0"	0"	34.2	3.8	0.7	0.4	1.8	3.0	original 4'	B2
	N. End	Type 1	3 Strips x 1'-0" and 2 gaps at 1" = 3'-2"	1'-1 3/8"	2 7/8"	7"	1'-10"	6"	10 1/4"	0"	0"	26.1	2.9	0.2	0.2	1.4	1.9	original 4'	See 1977 Plans
N24.11	S. End	Type 1	3 Strips x 1'-0" and 2 gaps at 1" = 3'-2"	6"	10 1/4"	7"	1'-10"	6"	10 1/4"	0"	0"	26.1	2.9	0.0	0.0	0.0	0.0	1990s 4'	Fixed 1985
	N. End	Type 1	3 Strips x 1'-0" and 2 gaps at 1" = 3'-2"	6"	10 1/4"	7"	1'-10"	6"	10 1/4"	0"	0"	26.1	2.9	0.0	0.0	0.0	0.0	1990s 4'	10-b
N24.12	S. End	Type 1	3 Strips x 1'-0" and 2 gaps at 1" = 3'-2"	6"	10 1/4"	7"	1'-10"	6"	10 1/4"	0"	0"	26.1	2.9	0.0	0.0	0.0	0.0	1990s 4'	Fixed 1985
	N. End	Type 2	3 Strips x 1'-0" and 2 gaps at 1" = 3'-2"	10 1/2"	10 1/4"	7"	1'-10"	10 1/2"	10 1/4"	0"	0"	35.0	3.9	0.3	0.0	0.0	0.3	1990s 4'	10-b
N24.13	S. End	Type 1	3 Strips x 1'-0" and 2 gaps at 1" = 3'-2"	1'-1 3/8"	2 7/8"	7"	1'-10"	6"	10 1/4"	0"	0"	26.1	2.9	0.2	0.2	1.4	1.9	original 4'	B2
	N. End	Type 1	3 Strips x 1'-0" and 2 gaps at 1" = 3'-2"	1'-1 3/8"	2 7/8"	7"	1'-10"	6"	10 1/4"	0"	0"	26.1	2.9	0.2	0.2	1.4	1.9	original 4'	See 1977 Plans
N24.14	S. End	Type 1	3 Strips x 1'-0" and 2 gaps at 1" = 3'-2"	1'-1 3/8"	2 7/8"	7"	1'-10"	6"	10 1/4"	0"	0"	26.1	2.9	1.0	0.7	0.9	2.6	original 4'	B2
	N. End	Type 1	3 Strips x 1'-0" and 2 gaps at 1" = 3'-2"	1'-1 3/8"	2 7/8"	7"	1'-10"	6"	10 1/4"	0"	0"	26.1	2.9	0.2	0.2	1.4	1.9	original 4'	See 1977 Plans
N24.15	S. End	Type 1	3 Strips x 1'-0" and 2 gaps at 1" = 3'-2"	1'-1 3/8"	2 7/8"	7"	1'-10"	6"	10 1/4"	0"	0"	26.1	2.9	1.0	0.3	0.8	2.0	original 4'	B2
	N. End	Type 1	3 Strips x 1'-0" and 2 gaps at 1" = 3'-2"	1'-1 3/8"	2 7/8"	7"	1'-10"	6"	10 1/4"	0"	0"	26.1	2.9	0.2	0.2	1.4	1.9	original 4'	See 1977 Plans
N24.16	S. End	Type 1	4 Strips x 1'-0" and 3 gaps at 1" = 4'-3"	1'-1 3/8"	2 7/8"	7"	1'-10"	6"	10 1/4"	0"	0"	34.2	3.8	0.7	0.3	1.8	2.9	original 4'	B2
	N. End	Type 1	3 Strips x 1'-0" and 2 gaps at 1" = 3'-2"	1'-1 3/8"	2 7/8"	7"	1'-10"	6"	10 1/4"	0"	0"	26.1	2.9	0.2	0.2	1.4	1.9	original 4'	See 1977 Plans
N24.17	S. End	Type 1	4 Strips x 1'-0" and 3 gaps at 1" = 4'-3"	1'-1 3/8"	2 7/8"	7"	1'-10"	6"	10 1/4"	0"	0"	34.2	3.8	0.3	0.7	1.8	2.9	original 4'	B2
	N. End	Type 1	3 Strips x 1'-0" and 2 gaps at 1" = 3'-2"	1'-1 3/8"	2 7/8"	7"	1'-10"	6"	10 1/4"	0"	0"	26.1	2.9	0.2	0.2	1.4	1.9	original 4'	See 1977 Plans
N24.18	S. End	Type 2	3 Strips x 1'-0" and 2 gaps at 1" = 3'-2"	1'-5 7/8"	2 7/8"	7"	1'-10"	10 1/2"	10 1/4"	0"	0"	35.7	4.0	0.7	0.2	0.9	1.9	original 4'	B2
	N. End	Type 1	3 Strips x 1'-0" and 2 gaps at 1" = 3'-2"	1'-1 3/8"	2 7/8"	7"	1'-10"	6"	10 1/4"	0"	0"	26.1	2.9	0.2	0.2	0.0	0.5	original 4'	See 1977 Plans

SPAN 25

BEAM	END	REPAIR TYPE	LENGTH	FIBER WRAP DIMENSIONS									ACRYLIC COATING (SQ YD)	PPC I-BEAM REPAIR DIMENSIONS				BEAM SECTION	BEARING TYPE
				A	B	C	D	E	F	G	H	FIBER WRAP (SQ FT)		EAST FACE (SQ FT)	WEST FACE (SQ FT)	BOTTOM FACE (SQ FT)	TOTAL PPC I-BEAM REPAIR (SQ FT)		
N25.1	S. End	Type 1	3 Strips x 1'-0" and 2 gaps at 1" = 3'-2"	6"	10 1/4"	7"	1'-10"	6"	10 1/4"	0"	0"	26.1	2.9	0.0	0.0	0.0	0.0	1990s 4'	10-b
	N. End	Type 1	3 Strips x 1'-0" and 2 gaps at 1" = 3'-2"	6"	10 1/4"	7"	1'-10"	6"	10 1/4"	0"	0"	26.1	2.9	0.8	0.0	0.0	0.8	1990s 4'	Fixed 1985
N25.2	S. End	Type 2	3 Strips x 1'-0" and 2 gaps at 1" = 3'-2"	1'-5 7/8"	2 7/8"	7"	1'-10"	10 1/2"	10 1/4"	0"	0"	35.7	4.0	0.0	0.0	0.0	0.0	original 4'	See 1977 Plans
	N. End	Type 1	3 Strips x 1'-0" and 2 gaps at 1" = 3'-2"	1'-1 3/8"	2 7/8"	7"	1'-10"	6"	10 1/4"	0"	0"	26.1	2.9	0.8	0.1	0.0	1.0	original 4'	B2
N25.3	S. End	Type 1	3 Strips x 1'-0" and 2 gaps at 1" = 3'-2"	1'-1 3/8"	2 7/8"	7"	1'-10"	6"	10 1/4"	0"	0"	26.1	2.9	0.7	0.0	0.9	1.6	original 4'	See 1977 Plans
	N. End	Type 1	3 Strips x 1'-0" and 2 gaps at 1" = 3'-2"	1'-1 3/8"	2 7/8"	7"	1'-10"	6"	10 1/4"	0"	0"	26.1	2.9	0.0	0.1	0.0	0.1	original 4'	B2
N25.4	S. End	Type 2	6 Strips x 1'-0" and 5 gaps at 1" = 6'-5"	1'-5 7/8"	2 7/8"	7"	1'-10"	10 1/2"	10 1/4"	0"	0"	67.7	7.5	0.7	2.3	6.4	9.5	original 4'	See 1977 Plans
	N. End	Type 2	9 Strips x 1'-0" and 8 gaps at 1" = 9'-8"	1'-5 7/8"	2 7/8"	7"	1'-10"	10 1/2"	10 1/4"	0"	0"	99.7	11.1	4.2	0.0	0.5	4.7	original 4'	B2
N25.5	S. End	Type 1	3 Strips x 1'-0" and 2 gaps at 1" = 3'-2"	6"	10 1/4"	7"	1'-10"	6"	10 1/4"	0"	0"	26.1	2.9	0.0	0.7	0.0	0.7	1990s 4'	10-b
	N. End	Type 1	3 Strips x 1'-0" and 2 gaps at 1" = 3'-2"	6"	10 1/4"	7"	1'-10"	6"	10 1/4"	0"	0"	26.1	2.9	0.0	0.0	0.0	0.0	1990s 4'	Fixed 1985
N25.6	S. End	Type 1	3 Strips x 1'-0" and 2 gaps at 1" = 3'-2"	6"	10 1/4"	7"	1'-10"	6"	10 1/4"	0"	0"	26.1	2.9	0.0	0.0	0.0	0.0	1990s 4'	10-b
	N. End	Type 1	3 Strips x 1'-0" and 2 gaps at 1" = 3'-2"	6"	10 1/4"	7"	1'-10"	6"	10 1/4"	0"	0"	26.1	2.9	0.0	0.0	0.0	0.0	1990s 4'	Fixed 1985
N25.7	S. End	Type 1	3 Strips x 1'-0" and 2 gaps at 1" = 3'-2"	1'-1 3/8"	2 7/8"	7"	1'-10"	6"	10 1/4"	0"	0"	26.1	2.9	0.2	0.7	0.9	1.9	original 4'	See 1977 Plans
	N. End	Type 1	4 Strips x 1'-0" and 3 gaps at 1" = 4'-3"	1'-1 3/8"	2 7/8"	7"	1'-10"	6"	10 1/4"	0"	0"	34.2	3.8	0.0	1.5	0.0	1.5	original 4'	B2
N25.8	S. End	Type 1	4 Strips x 1'-0" and 3 gaps at 1" = 4'-3"	1'-1 3/8"	2 7/8"	7"	1'-10"	6"	10 1/4"	0"	0"	34.2	3.8	0.7	0.7	1.8	3.3	original 4'	See 1977 Plans
	N. End	Type 1	3 Strips x 1'-0" and 2 gaps at 1" = 3'-2"	1'-1 3/8"	2 7/8"	7"	1'-10"	6"	10 1/4"	0"	0"	26.1	2.9	0.0	0.0	0.0	0.0	original 4'	B2
N25.9	S. End	Type 1	3 Strips x 1'-0" and 2 gaps at 1" = 3'-2"	6"	10 1/4"	7"	1'-10"	6"	10 1/4"	0"	0"	26.1	2.9	0.0	0.0	0.9	0.9	1990s 4'	10-b
	N. End	Type 1	3 Strips x 1'-0" and 2 gaps at 1" = 3'-2"	6"	10 1/4"	7"	1'-10"	6"	10 1/4"	0"	0"	26.1	2.9	0.0	0.0	0.0	0.0	1990s 4'	Fixed 1985
N25.10	S. End	Type 1	3 Strips x 1'-0" and 2 gaps at 1" = 3'-2"	6"	10 1/4"	7"	1'-10"	6"	10 1/4"	0"	0"	26.1	2.9	0.0	0.0	0.9	0.9	1990s 4'	10-b
	N. End	Type 1	3 Strips x 1'-0" and 2 gaps at 1" = 3'-2"	6"	10 1/4"	7"	1'-10"	6"	10 1/4"	0"	0"	26.1	2.9	0.0	0.0	0.0	0.0	1990s 4'	Fixed 1985
N25.11	S. End	Type 1	4 Strips x 1'-0" and 3 gaps at 1" = 4'-3"	1'-1 3/8"	2 7/8"	7"	1'-10"	6"	10 1/4"	0"	0"	34.2	3.8	0.7	0.7	1.8	3.3	original 4'	See 1977 Plans
	N. End	Type 1	5 Strips x 1'-0" and 4 gaps at 1" = 5'-4"	1'-1 3/8"	2 7/8"	7"	1'-10"	6"	10 1/4"	0"	0"	42.3	4.7	1.4	2.2	0.0	3.6	original 4'	B2
N25.12	S. End	Type 1	4 Strips x 1'-0" and 3 gaps at 1" = 4'-3"	1'-1 3/8"	2 7/8"	7"	1'-10"	6"	10 1/4"	0"	0"	34.2	3.8	0.2	0.7	1.8	2.8	original 4'	See 1977 Plans
	N. End	Type 1	3 Strips x 1'-0" and 2 gaps at 1" = 3'-2"	1'-1 3/8"	2 7/8"	7"	1'-10"	6"	10 1/4"	0"	0"	26.1	2.9	0.0	0.2	0.0	0.2	original 4'	B2
N25.13	S. End	Type 1	5 Strips x 1'-0" and 4 gaps at 1" = 5'-4"	1'-1 3/8"	2 7/8"	7"	1'-10"	6"	10 1/4"	0"	0"	42.3	4.7	0.7	0.7	4.6	6.0	original 4'	See 1977 Plans
	N. End	Type 1	6 Strips x 1'-0" and 5 gaps at 1" = 6'-5"	1'-1 3/8"	2 7/8"	7"	1'-10"	6"	10 1/4"	0"	0"	50.4	5.6	2.8	1.1	0.0	3.8	original 4'	B2
N25.14	S. End	Type 4	3 Strips x 1'-0" and 2 gaps at 1" = 3'-2"	2'-10 1/2"	2 7/8"	7"	1'-10"	2'-3 1/8"	10 1/4"	5 7/8"	4"	56.3	6.3	0.0	0.0	0.0	0.0	original 4'	See 1977 Plans
	N. End	Type 1	3 Strips x 1'-0" and 2 gaps at 1" = 3'-2"	1'-1 3/8"	2 7/8"	7"	1'-10"	6"	10 1/4"	0"	0"	26.1	2.9	0.0	0.0	0.0	0.0	original 4'	B2

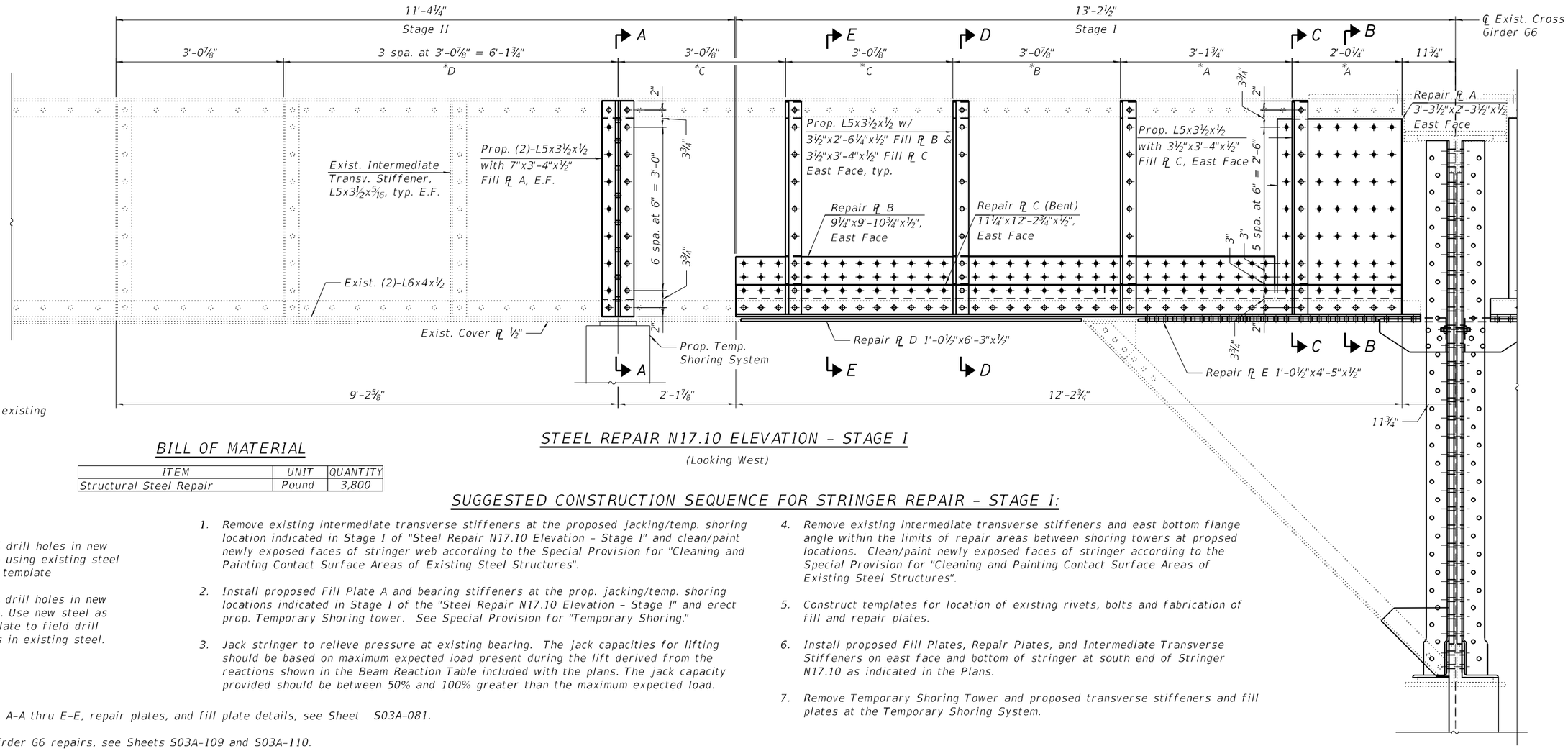

*See Table 1 for existing riveting spacing.

STEEL REPAIR N17.10 ELEVATION - STAGE I

(Looking West)

BILL OF MATERIAL

ITEM	UNIT	QUANTITY
Structural Steel Repair	Pound	3,800

LEGEND

- ○ Field drill holes in new steel using existing steel as a template
- • Shop drill holes in new steel. Use new steel as template to field drill holes in existing steel.

SUGGESTED CONSTRUCTION SEQUENCE FOR STRINGER REPAIR - STAGE I:

1. Remove existing intermediate transverse stiffeners at the proposed jacking/temp. shoring location indicated in Stage I of "Steel Repair N17.10 Elevation - Stage I" and clean/paint newly exposed faces of stringer web according to the Special Provision for "Cleaning and Painting Contact Surface Areas of Existing Steel Structures".
2. Install proposed Fill Plate A and bearing stiffeners at the prop. jacking/temp. shoring locations indicated in Stage I of the "Steel Repair N17.10 Elevation - Stage I" and erect prop. Temporary Shoring tower. See Special Provision for "Temporary Shoring."
3. Jack stringer to relieve pressure at existing bearing. The jack capacities for lifting should be based on maximum expected load present during the lift derived from the reactions shown in the Beam Reaction Table included with the plans. The jack capacity provided should be between 50% and 100% greater than the maximum expected load.
4. Remove existing intermediate transverse stiffeners and east bottom flange angle within the limits of repair areas between shoring towers at propsed locations. Clean/paint newly exposed faces of stringer according to the Special Provision for "Cleaning and Painting Contact Surface Areas of Existing Steel Structures".
5. Construct templates for location of existing rivets, bolts and fabrication of fill and repair plates.
6. Install proposed Fill Plates, Repair Plates, and Intermediate Transverse Stiffeners on east face and bottom of stringer at south end of Stringer N17.10 as indicated in the Plans.
7. Remove Temporary Shoring Tower and proposed transverse stiffeners and fill plates at the Temporary Shoring System.

NOTES:

1. For Sections A-A thru E-E, repair plates, and fill plate details, see Sheet S03A-081.
2. For Cross Girder G6 repairs, see Sheets S03A-109 and S03A-110.

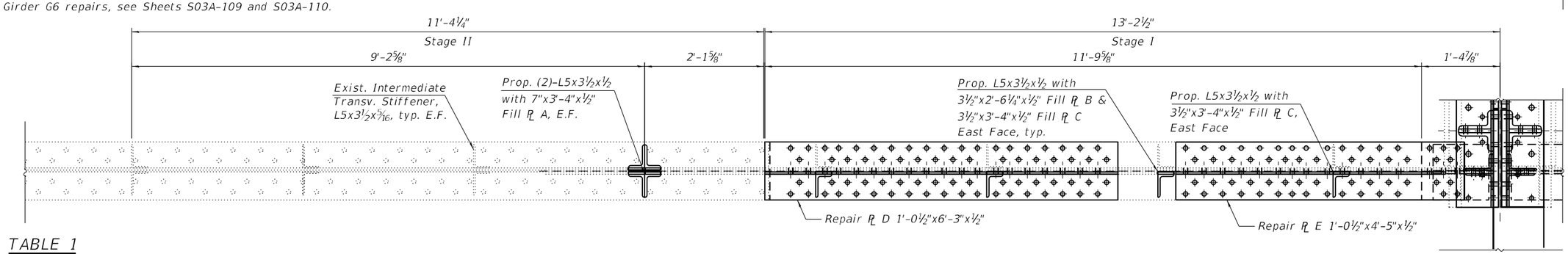

TABLE 1

PANEL	RIVET SPA.
A	4"
B	4½"
C	4⅛"
D	5⅝"

STEEL REPAIR N17.10 PLAN - STAGE I

N

HBM ENGINEERING GROUP, LLC	USER NAME =	DESIGNED - JJS, EN	REVISED -
		CHECKED - MI	REVISED -
	PLOT SCALE =	DRAWN - LAB, EN	REVISED -
	PLOT DATE =	DATE - 4/29/2024	REVISED -

STATE OF ILLINOIS
DEPARTMENT OF TRANSPORTATION

STRUCTURAL STEEL REPAIRS AT N17.10 NORTH END (SHT. 1 OF 4)
STRUCTURE NO. 016-0133 (NB)

SHEET S03A-080 OF S03A-148 SHEETS

F.A.I. RTE.	SECTION	COUNTY	TOTAL SHEETS	SHEET NO.
90/94	2020-005-BR	COOK	908	408

CONTRACT NO. 62K73

ILLINOIS | FED. AID PROJECT

MODEL: Default
FILE NAME: P:\2004-825 PTB 195-014 HBM\WO#7 I-90 Various Overlays\Ashland Ave\Sheet Files\0160133-62K73-S80-Structural Steel Repairs 17.10-1.dgn
4/30/2024 3:21:00 PM

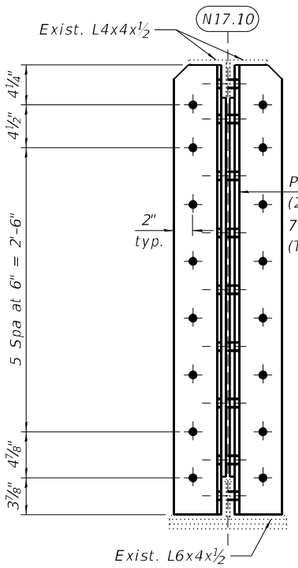

SECTION A-A

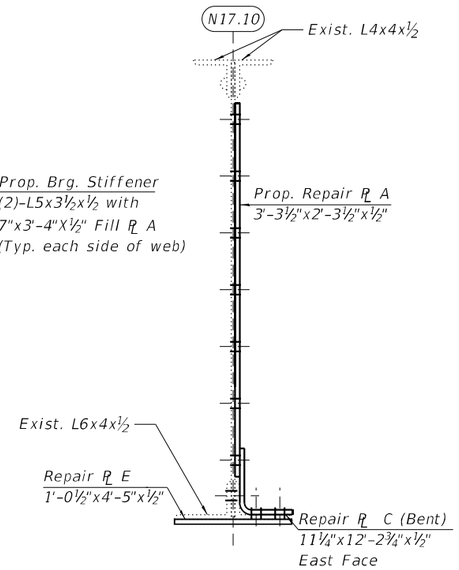

SECTION B-B

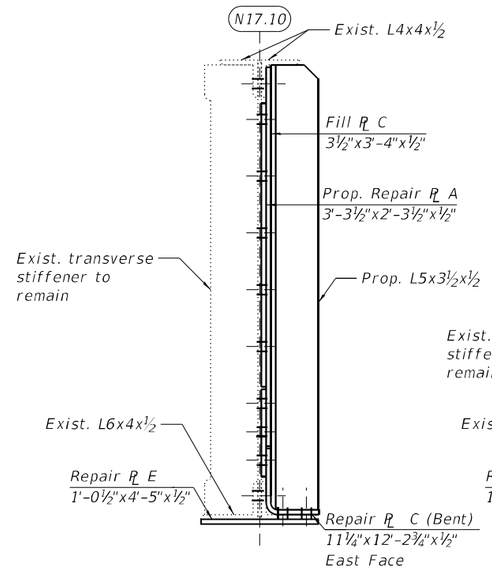

SECTION C-C

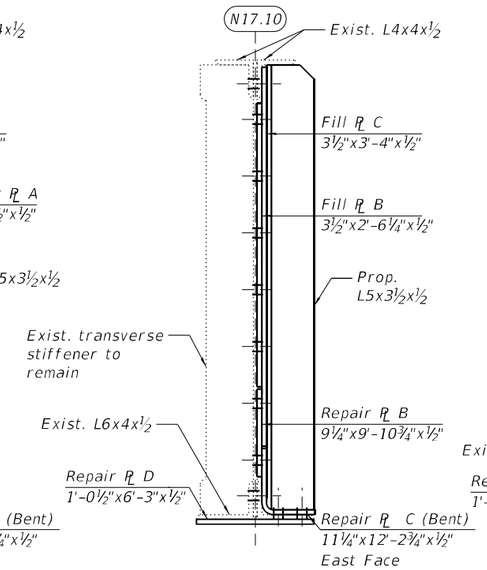

SECTION D-D

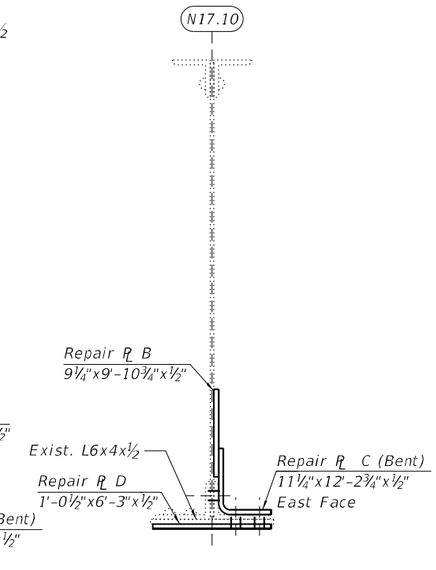

SECTION E-E

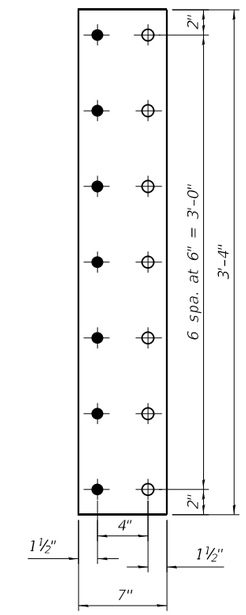

FILL PLATE A
(7"x3'-4"x½" PL)

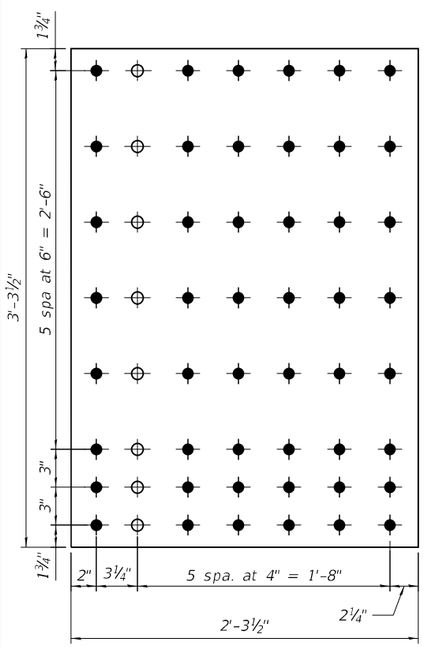

REPAIR PLATE A
(3'-3½"x2'-3½"x½" PL)

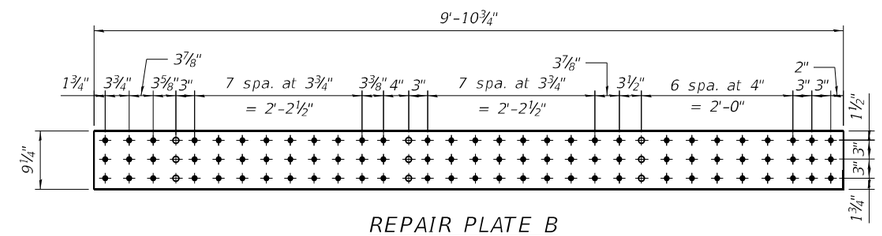

REPAIR PLATE B
(9¼"x9'-10¾"x½" PL)

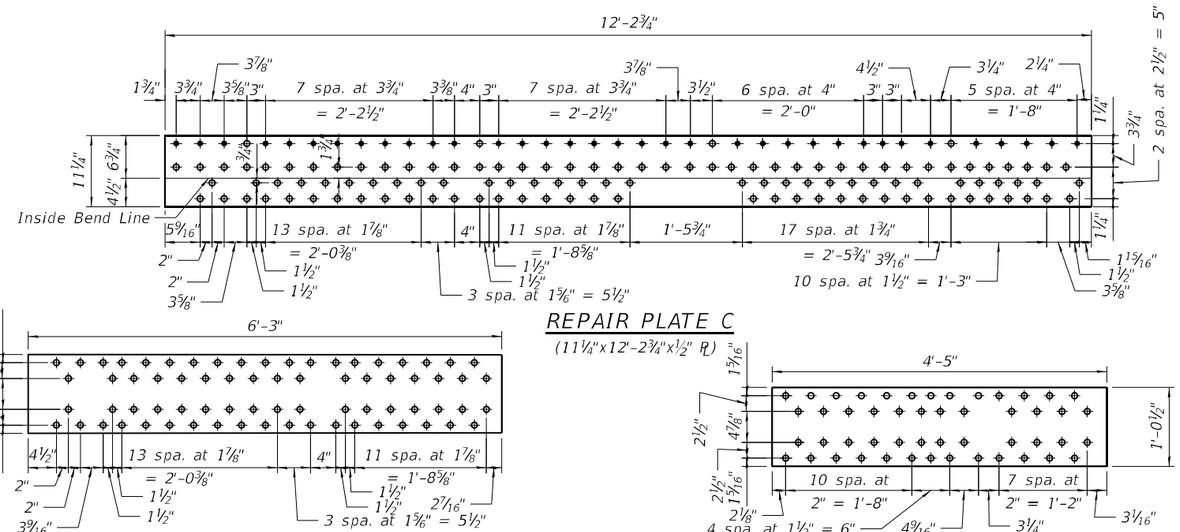

REPAIR PLATE C
(11¼"x12'-2¾"x½" PL)

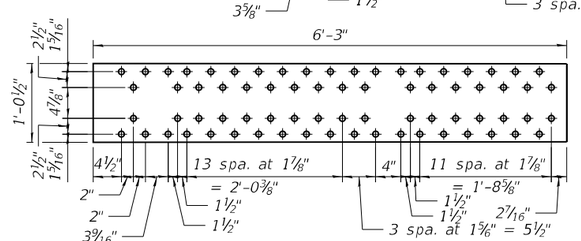

REPAIR PLATE D
(1'-0½"x6'-3"x½" PL)

REPAIR PLATE E
(1'-0½"x4'-5"x½" PL)

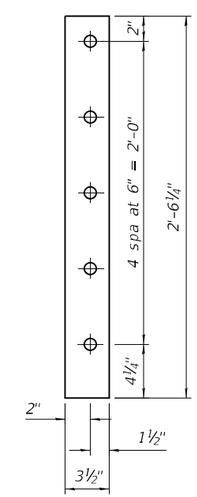

FILL PLATE B
(3½"x2'-6¼"x½" PL)

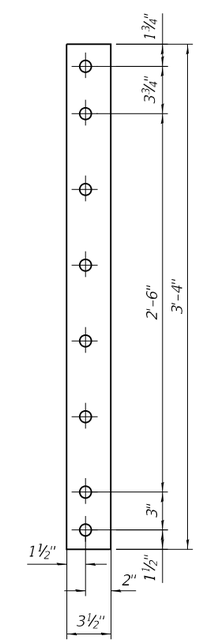

FILL PLATE C
(3½"x3'-4"X½" PL)

MODEL: Default
FILE NAME: P:\2004-825 PTB195-014 HBM\WO#7 I-90 Various Overlays\Ashland Ave\Sheet Files\0160133-62K73-S01-Structural Steel Repairs 17.10-2.dgn
4/30/2024 3:21:03 PM

HBM ENGINEERING GROUP, LLC

USER NAME =	DESIGNED - JJS, EN	REVISED -	
	CHECKED - MI	REVISED -	
PLOT SCALE =	DRAWN - LAB, EN	REVISED -	
PLOT DATE =	DATE - 4/29/2024	REVISED -	

STATE OF ILLINOIS
DEPARTMENT OF TRANSPORTATION

STRUCTURAL STEEL REPAIRS AT N17.10 NORTH END (SHT. 2 OF 4)
STRUCTURE NO. 016-0133 (NB)

SHEET S03A-081 OF S03A-148 SHEETS

F.A.I. RTE.	SECTION	COUNTY	TOTAL SHEETS	SHEET NO.
90/94	2020-005-BR	COOK	908	409
		CONTRACT NO. 62K73		
	ILLINOIS	FED. AID PROJECT		

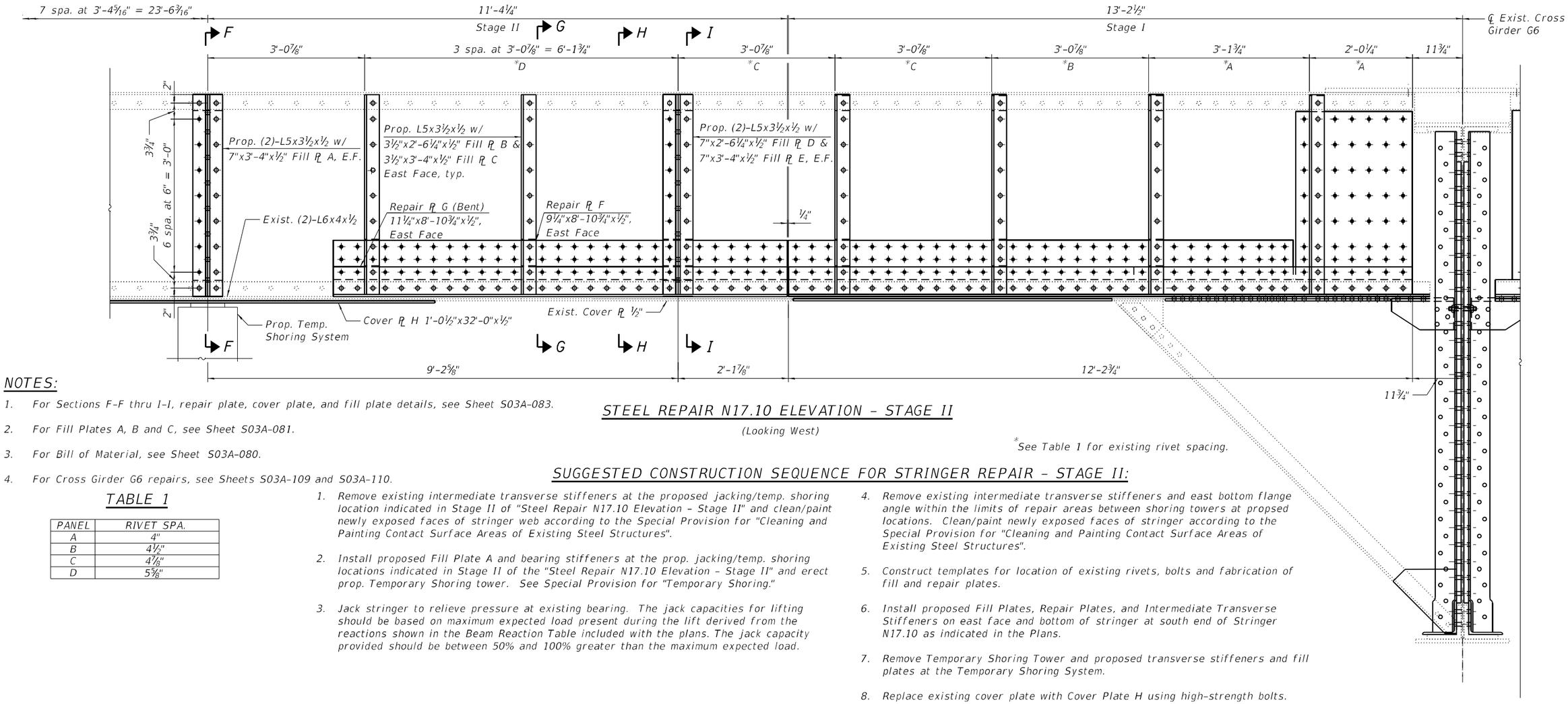

NOTES:

1. For Sections F-F thru I-I, repair plate, cover plate, and fill plate details, see Sheet S03A-083.
2. For Fill Plates A, B and C, see Sheet S03A-081.
3. For Bill of Material, see Sheet S03A-080.
4. For Cross Girder G6 repairs, see Sheets S03A-109 and S03A-110.

STEEL REPAIR N17.10 ELEVATION - STAGE II

(Looking West)

*See Table 1 for existing rivet spacing.

TABLE 1

PANEL	RIVET SPA.
A	4"
B	4 1/2"
C	4 7/8"
D	5 5/8"

SUGGESTED CONSTRUCTION SEQUENCE FOR STRINGER REPAIR - STAGE II:

1. Remove existing intermediate transverse stiffeners at the proposed jacking/temp. shoring location indicated in Stage II of "Steel Repair N17.10 Elevation - Stage II" and clean/paint newly exposed faces of stringer web according to the Special Provision for "Cleaning and Painting Contact Surface Areas of Existing Steel Structures".
2. Install proposed Fill Plate A and bearing stiffeners at the prop. jacking/temp. shoring locations indicated in Stage II of the "Steel Repair N17.10 Elevation - Stage II" and erect prop. Temporary Shoring tower. See Special Provision for "Temporary Shoring."
3. Jack stringer to relieve pressure at existing bearing. The jack capacities for lifting should be based on maximum expected load present during the lift derived from the reactions shown in the Beam Reaction Table included with the plans. The jack capacity provided should be between 50% and 100% greater than the maximum expected load.
4. Remove existing intermediate transverse stiffeners and east bottom flange angle within the limits of repair areas between shoring towers at propsed locations. Clean/paint newly exposed faces of stringer according to the Special Provision for "Cleaning and Painting Contact Surface Areas of Existing Steel Structures".
5. Construct templates for location of existing rivets, bolts and fabrication of fill and repair plates.
6. Install proposed Fill Plates, Repair Plates, and Intermediate Transverse Stiffeners on east face and bottom of stringer at south end of Stringer N17.10 as indicated in the Plans.
7. Remove Temporary Shoring Tower and proposed transverse stiffeners and fill plates at the Temporary Shoring System.
8. Replace existing cover plate with Cover Plate H using high-strength bolts.

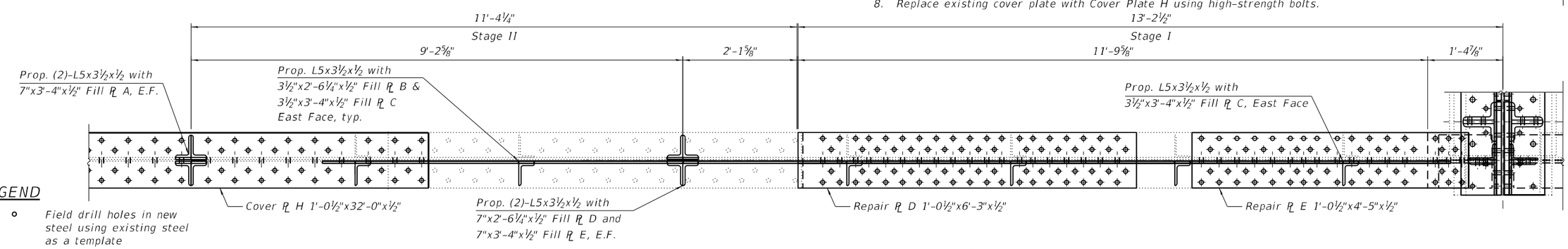

STEEL REPAIR N17.10 PLAN - STAGE II

LEGEND

- ○ Field drill holes in new steel using existing steel as a template
- • Shop drill holes in new steel. Use new steel as template to field drill holes in existing steel.

MODEL: Default
FILE NAME: P:\2004-825 PTB195-014 HBM\WO#7 I-90 Various Overlays\Ashland Ave\Sheet Files\0160133-62K73-S02A-Structural Steel Repairs 17.10-3.dgn

HBM ENGINEERING GROUP, LLC

USER NAME =	DESIGNED - JJS, EN	REVISED -
	CHECKED - MI	REVISED -
PLOT SCALE =	DRAWN - LAB, EN	REVISED -
PLOT DATE =	DATE - 4/29/2024	REVISED -

STATE OF ILLINOIS
DEPARTMENT OF TRANSPORTATION

STRUCTURAL STEEL REPAIRS AT N17.10 NORTH END (SHT. 3 OF 4)
STRUCTURE NO. 016-0133 (NB)

SHEET S03A-082 OF S03A-148 SHEETS

F.A.I. RTE.	SECTION	COUNTY	TOTAL SHEETS	SHEET NO.
90/94	2020-005-BR	COOK	908	410
		CONTRACT NO. 62K73		
		ILLINOIS	FED. AID PROJECT	

4/30/2024 3:21:04 PM

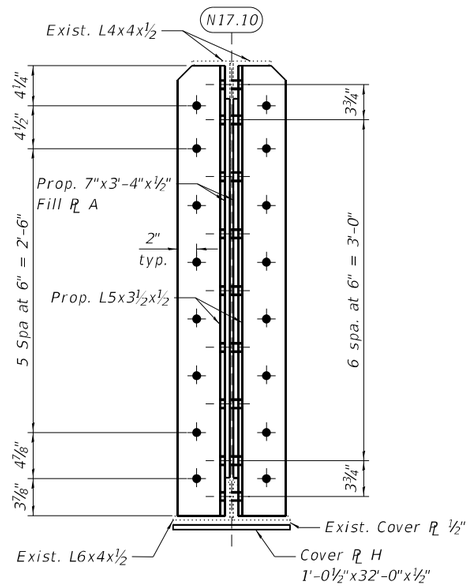

SECTION F-F

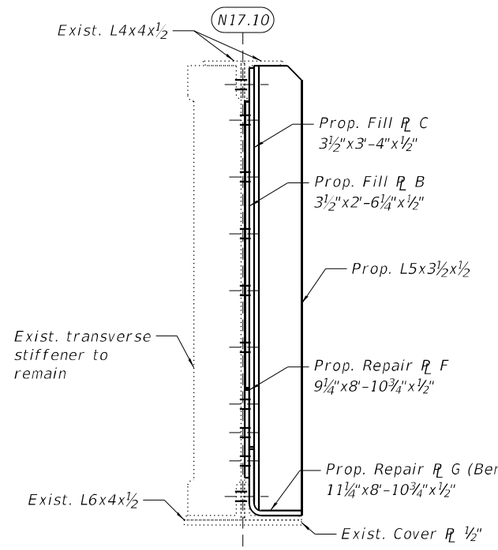

SECTION G-G

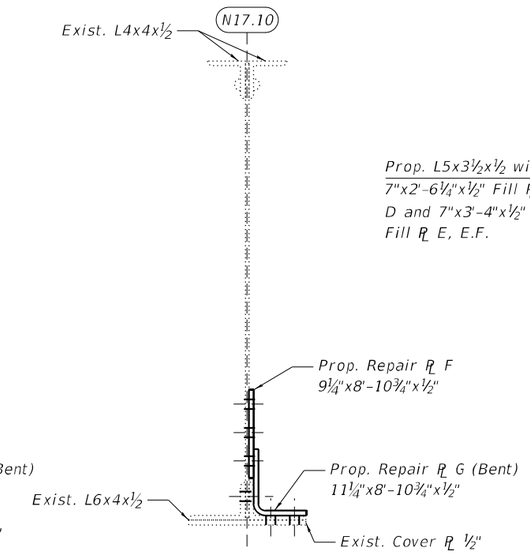

SECTION H-H

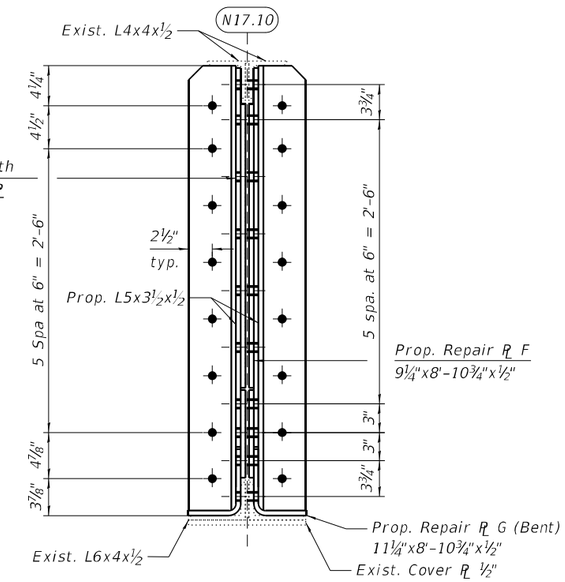

SECTION I-I

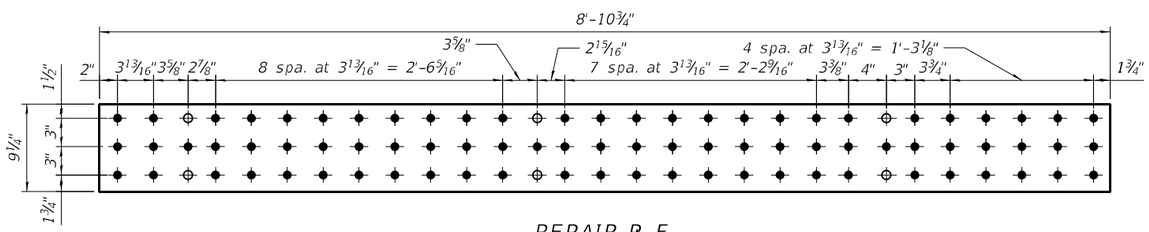

REPAIR PL F

(9¼"x8'-10¾"x½")

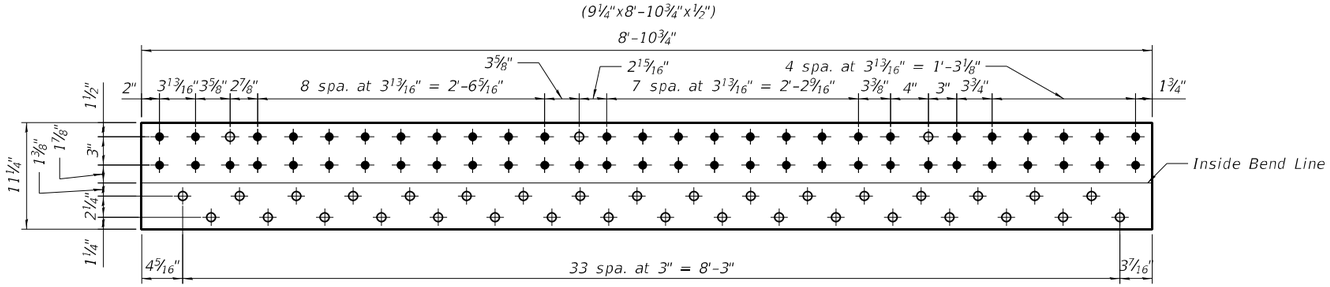

REPAIR PL G (Bent)

(11¼"x8'-10¾"x½")

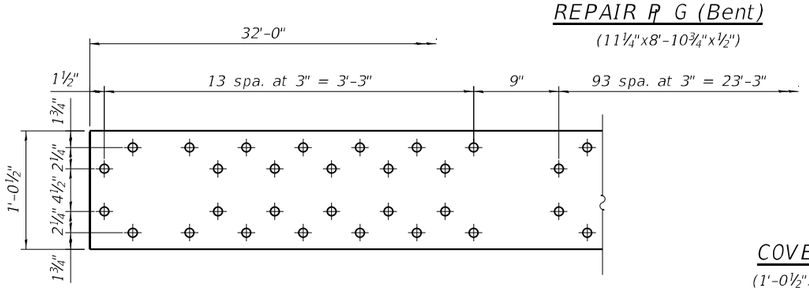

COVER PL H

(1'-0½"x32'-0"x½")*

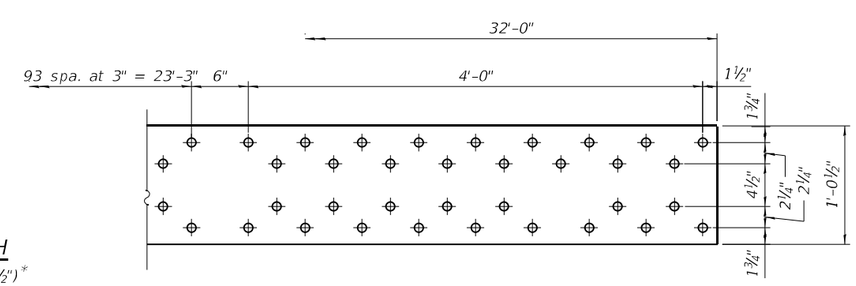

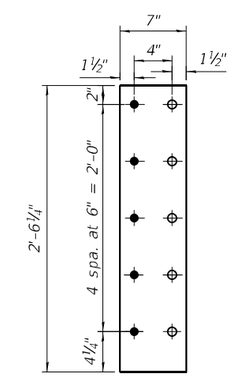

FILL PL D

(7"x2'-6¼"x½")

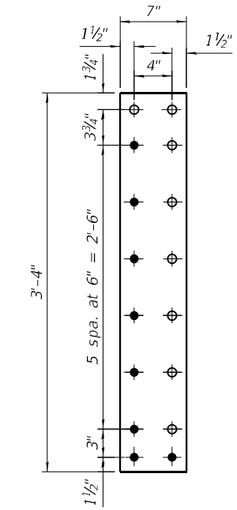

FILL PL E

(7"x3'-4"x½")

*Rivet locations at stiffeners may be ommited.

HBM ENGINEERING GROUP, LLC	USER NAME =	DESIGNED - JJS, EN	REVISED -	STATE OF ILLINOIS DEPARTMENT OF TRANSPORTATION	STRUCTURAL STEEL REPAIRS AT N17.10 NORTH END (SHT. 4 OF 4) STRUCTURE NO. 016-0133 (NB)
		CHECKED - MI	REVISED -		
	PLOT SCALE =	DRAWN - LAB, EN	REVISED -		
	PLOT DATE =	DATE - 4/29/2024	REVISED -		SHEET S03A-083 OF S03A-148 SHEETS

F.A.I. RTE.	SECTION	COUNTY	TOTAL SHEETS	SHEET NO.
90/94	2020-005-BR	COOK	908	411
		CONTRACT NO. 62K73		
		ILLINOIS	FED. AID PROJECT	

MODEL: Default
FILE NAME: P:\2004-825 PTB 195-014 HBM\WO#7 I-90 Various Overlays\Ashland Ave\Sheet Files\0160133-62K73-S02B-Structural Steel Repairs 17.10-4.dgn
4/30/2024 3:21:06 PM

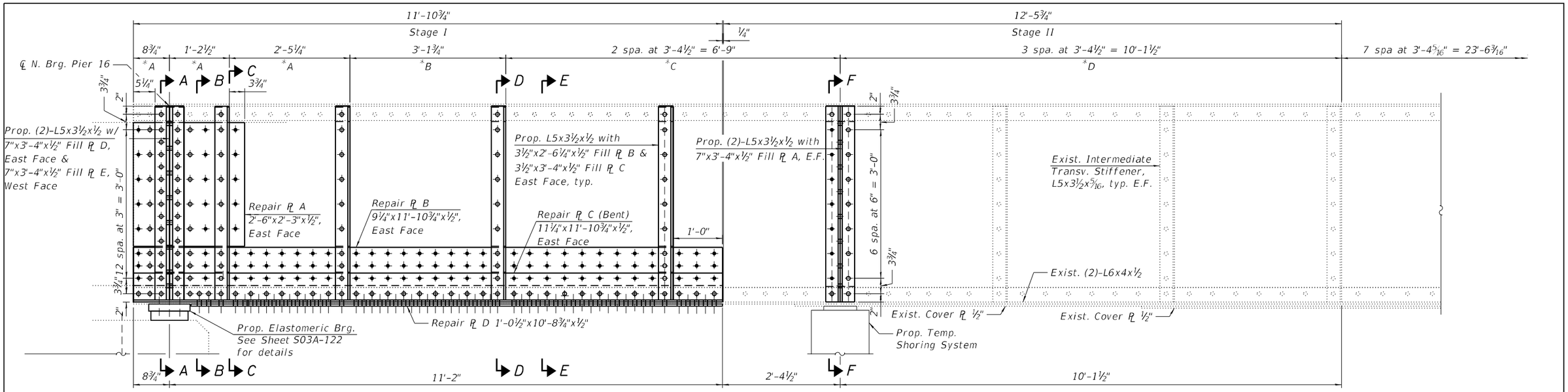

STEEL REPAIR N17.10 ELEVATION - STAGE I

(Looking West)

*See Table 1 for existing rivet spacing.

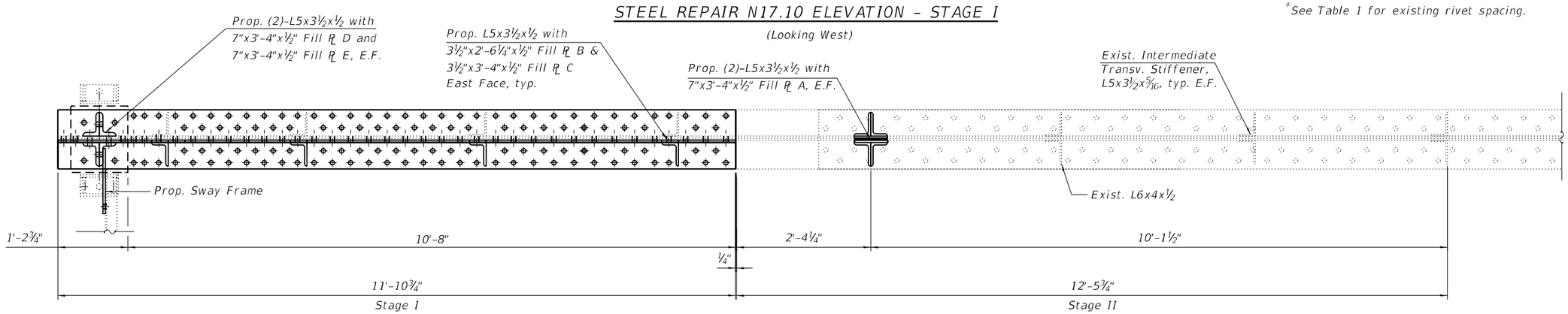

STEEL REPAIR N17.10 PLAN - STAGE I

TABLE 1

PANEL	RIVET SPA.
A	4"
B	4½"
C	4⅞"
D	5⅜"

BILL OF MATERIAL

ITEM	UNIT	QUANTITY
Structural Steel Repair	Pound	3,270

LEGEND

- ○ Field drill holes in new steel using existing steel as a template
- • Shop drill holes in new steel. Use new steel as template to field drill holes in existing steel.

NOTES:

1. For Sections A-A thru F-F, Repair plates, fill plates and sway frame connection plate, see Sheet S03A-085.
2. For Cross Girder G6 repairs, see Sheets S03A-109 and S03A-110.

SUGGESTED CONSTRUCTION SEQUENCE FOR STRINGER REPAIR - STAGE I:

1. Remove existing intermediate transverse stiffeners at the proposed jacking/temp. shoring location indicated in Stage I of "Steel Repair N17.10 Elevation - Stage I" and clean/paint newly exposed faces of stringer web according to the Special Provision for "Cleaning and Painting Contact Surface Areas of Existing Steel Structures".
2. Install proposed Fill Plate A and bearing stiffeners at the prop. jacking/temp. shoring locations indicated in Stage I of the "Steel Repair N17.10 Elevation - Stage I" and erect prop. Temporary Shoring tower. See Special Provision for "Temporary Shoring."
3. Jack stringer to relieve pressure at existing bearing. The jack capacities for lifting should be based on maximum expected load present during the lift derived from the reactions shown in the Beam Reaction Table included with the plans. The jack capacity provided should be between 50% and 100% greater than the maximum expected load.
4. Remove existing intermediate transverse stiffeners and east bottom flange angle within the limits of repair areas between shoring towers at propsed locations. Clean/paint newly exposed faces of stringer according to the Special Provision for "Cleaning and Painting Contact Surface Areas of Existing Steel Structures".
5. Construct templates for location of existing rivets, bolts and fabrication of fill and repair plates.
6. Install proposed Fill Plates, Repair Plates, Elastomeric Bearing and Intermediate Transverse Stiffeners on east face and bottom of stringer at south end of Stringer N17.10 as indicated in the Plans.
7. Remove Temporary Shoring Tower and proposed transverse stiffeners and fill plates at the Temporary Shoring System.

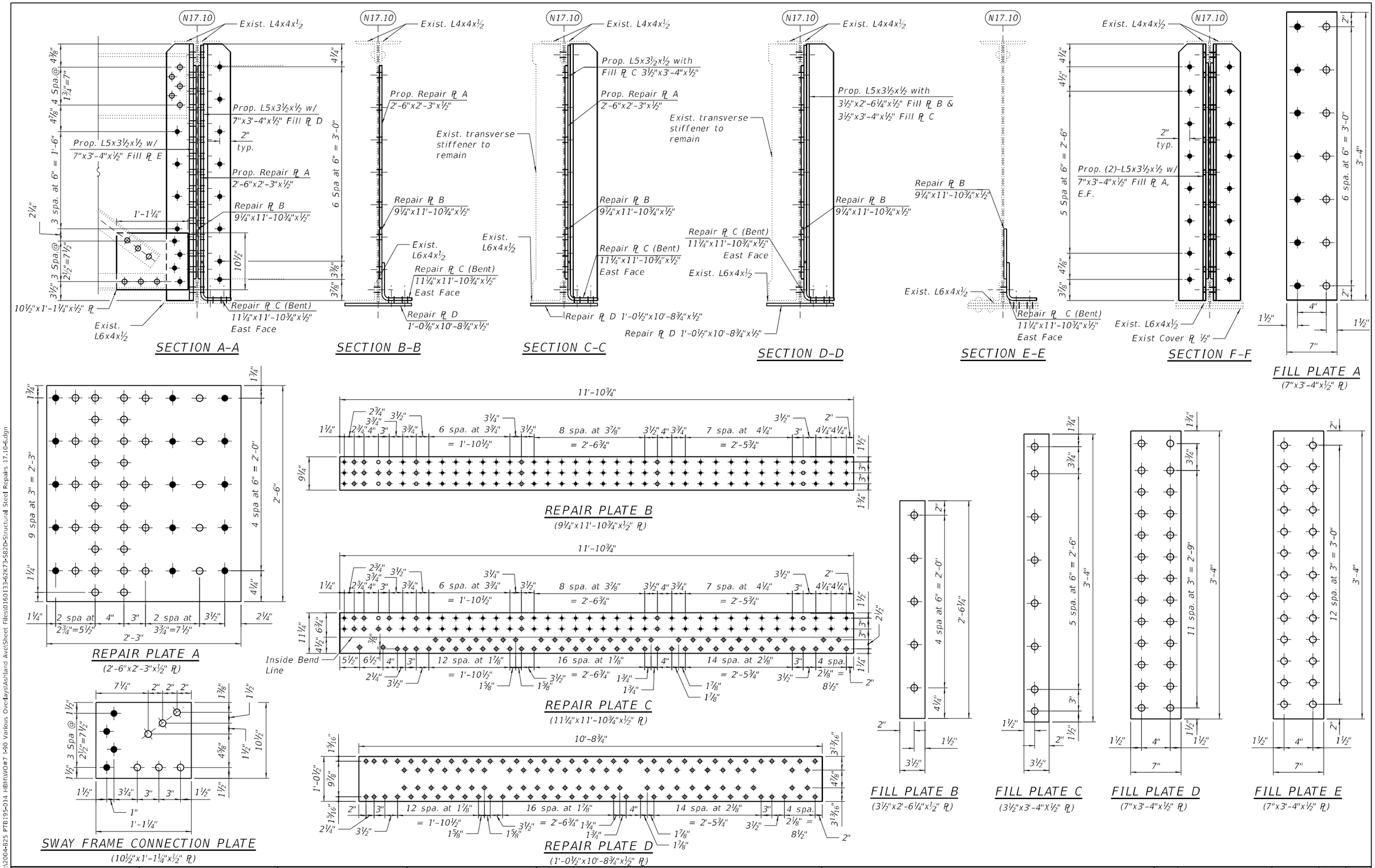

MODEL: Default
FILE NAME: P:\2004-825 PTB195-014 HBM\WO#7 I-90 Various Overlays\Ashland Ave\Sheet Files\0160133-62K73-S82D-Structural Steel Repairs 17.10-6.dgn
4/30/2024 3:21:15 PM

HBM ENGINEERING GROUP, LLC	USER NAME =	DESIGNED - JJS, EN	REVISED -
		CHECKED - MI	REVISED -
	PLOT SCALE =	DRAWN - LAB, EN	REVISED -
	PLOT DATE =	DATE - 4/29/2024	REVISED -

STATE OF ILLINOIS
DEPARTMENT OF TRANSPORTATION

STRUCTURAL STEEL REPAIRS AT N17.10 SOUTH END (SHT. 2 OF 4)
STRUCTURE NO. 016-0133 (NB)

SHEET S03A-085 OF S03A-148 SHEETS

F.A.I. RTE.	SECTION	COUNTY	TOTAL SHEETS	SHEET NO.
90/94	2020-005-BR	COOK	908	413
		CONTRACT NO. 62K73		
		ILLINOIS	FED. AID PROJECT	

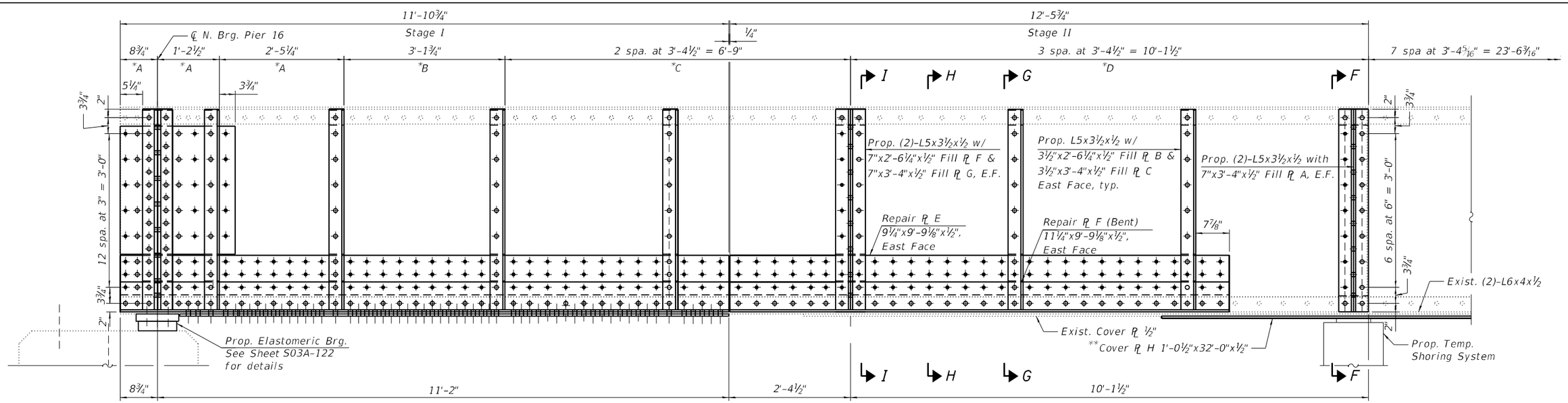

STEEL REPAIR N17.10 ELEVATION - STAGE II

*See Table 1 for existing rivet spacing.

**Quantities for Cover Plate H included in Bill of Material on Sheet S03A-080.

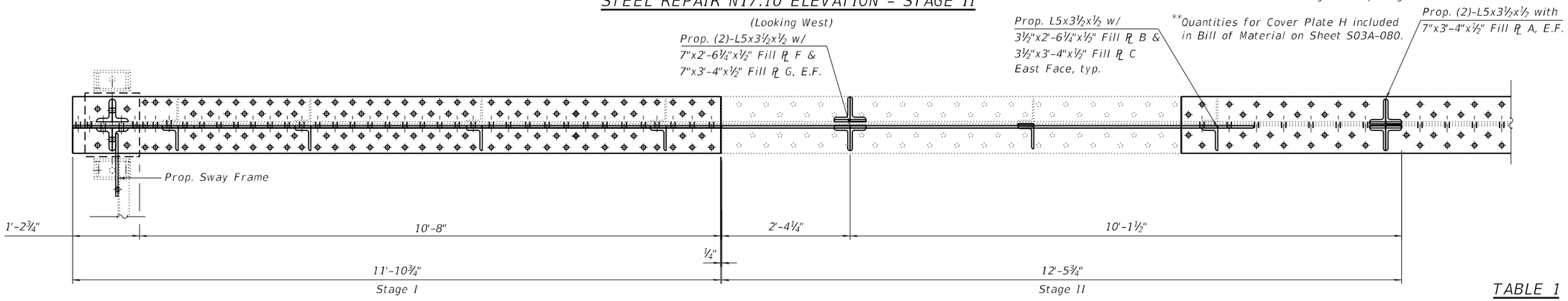

STEEL REPAIR N17.10 PLAN - STAGE II

TABLE 1

PANEL	RIVET SPA.
A	4"
B	4½"
C	4⅛"
D	5⅜"

NOTES:

1. For Bill of Material, see Sheet S03A-084.
2. For Fill Plates A, B and C, see Sheet S03A-085.
3. For Sections F-F thru I-I, Repair Plates E and F, and Fill Plates F and G, see Sheet S03A-087.

LEGEND

- ○ Field drill holes in new steel using existing steel as a template
- • Shop drill holes in new steel. Use new steel as template to field drill holes in existing steel.

SUGGESTED CONSTRUCTION SEQUENCE FOR STRINGER REPAIR - STAGE II:

1. Remove existing intermediate transverse stiffeners at the proposed jacking/temp. shoring location indicated in Stage II of "Steel Repair N17.10 Elevation - Stage II" and clean/paint newly exposed faces of stringer web according to the Special Provision for "Cleaning and Painting Contact Surface Areas of Existing Steel Structures".
2. Install proposed Fill Plate A and bearing stiffeners at the prop. jacking/temp. shoring locations indicated in Stage II of the "Steel Repair N17.10 Elevation - Stage II" and erect prop. Temporary Shoring tower. See Special Provision for "Temporary Shoring."
3. Jack stringer to relieve pressure at existing bearing. The jack capacities for lifting should be based on maximum expected load present during the lift derived from the reactions shown in the Beam Reaction Table included with the plans. The jack capacity provided should be between 50% and 100% greater than the maximum expected load.
4. Remove existing intermediate transverse stiffeners and east bottom flange angle within the limits of repair areas between shoring towers at propsed locations. Clean/paint newly exposed faces of stringer according to the Special Provision for "Cleaning and Painting Contact Surface Areas of Existing Steel Structures".
5. Construct templates for location of existing rivets, bolts and fabrication of fill and repair plates.
6. Install proposed Fill Plates, Repair Plates, and Intermediate Transverse Stiffeners on east face and bottom of stringer at south end of Stringer N17.10 as indicated in the Plans.
7. Remove Temporary Shoring Tower and proposed transverse stiffeners and fill plates at the Temporary Shoring System.

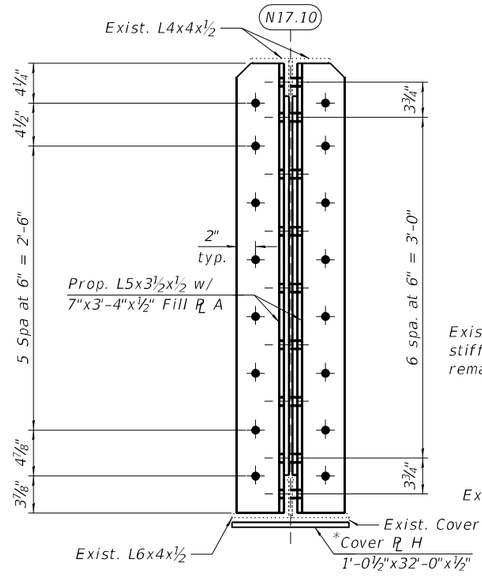

SECTION F-F

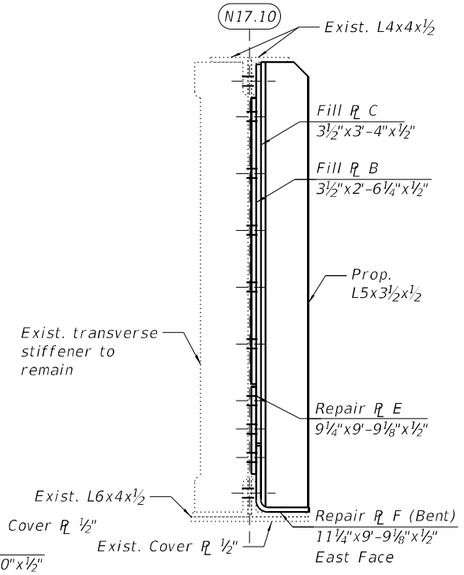

SECTION G-G

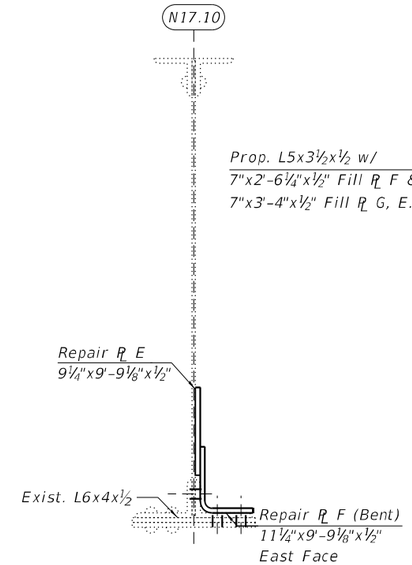

SECTION H-H

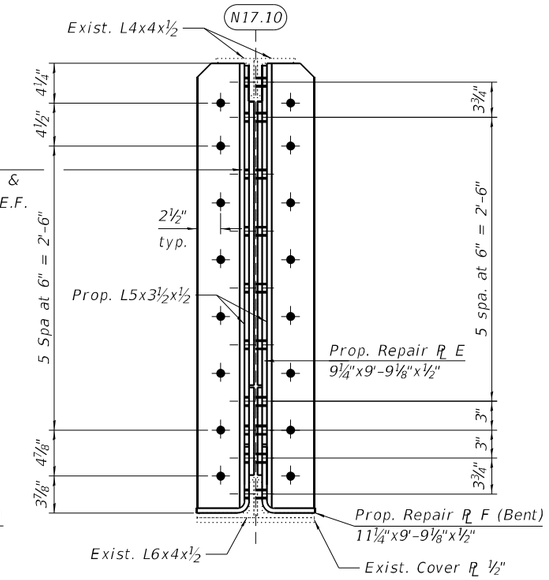

SECTION I-I

*Quantity for Cover Plate H included
in Bill of Material on Sheet S03A-080.

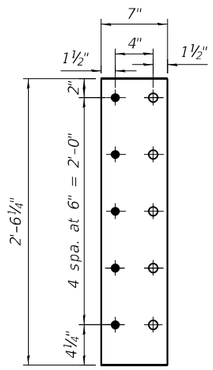

FILL PL F

(7"x2'-6¼"x½" PL)

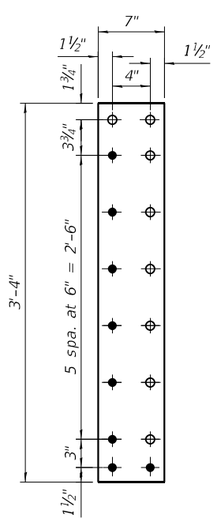

FILL PL G

(7"x3'-4"x½" PL)

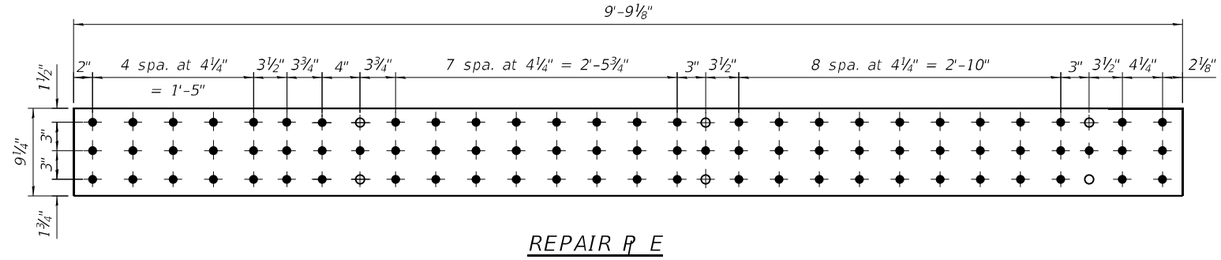

REPAIR PL E

(9¼"x9'-9⅛"x½" PL)

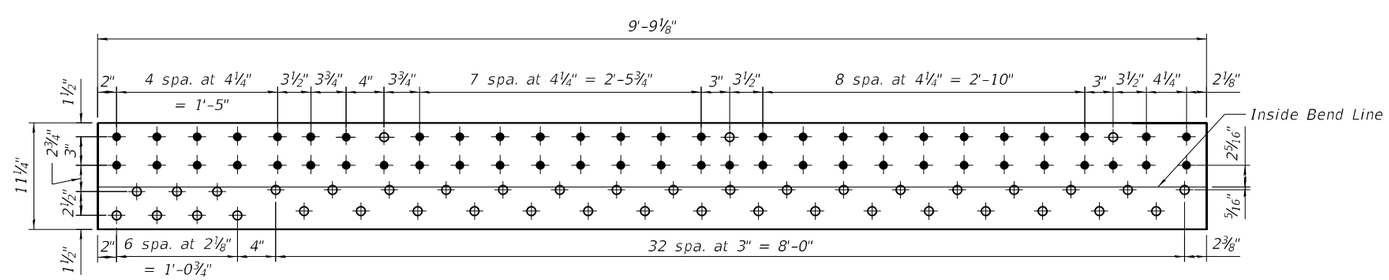

REPAIR PL F

(11¼"x9'-9⅛"x½" PL)

MODEL: Default
FILE NAME: P:\2004-825 PTB195-014 HBM\WO#7 I-90 Various Overlays\Ashland Ave\Sheet Files\0160133-62K73-S02F-Structural Steel Repairs 17.10-8.dgn
4/30/2024 3:21:18 PM

HBM ENGINEERING GROUP, LLC	USER NAME =	DESIGNED - JJS, EN	REVISED -
		CHECKED - MI	REVISED -
	PLOT SCALE =	DRAWN - LAB, EN	REVISED -
	PLOT DATE =	DATE - 4/29/2024	REVISED -

STATE OF ILLINOIS
DEPARTMENT OF TRANSPORTATION

STRUCTURAL STEEL REPAIRS AT N17.10 SOUTH END (SHT. 4 OF 4)
STRUCTURE NO. 016-0133 (NB)

SHEET S03A-087 OF S03A-148 SHEETS

F.A.I. RTE.	SECTION	COUNTY	TOTAL SHEETS	SHEET NO.
90/94	2020-005-BR	COOK	908	415
		CONTRACT NO. 62K73		
		ILLINOIS FED. AID PROJECT		

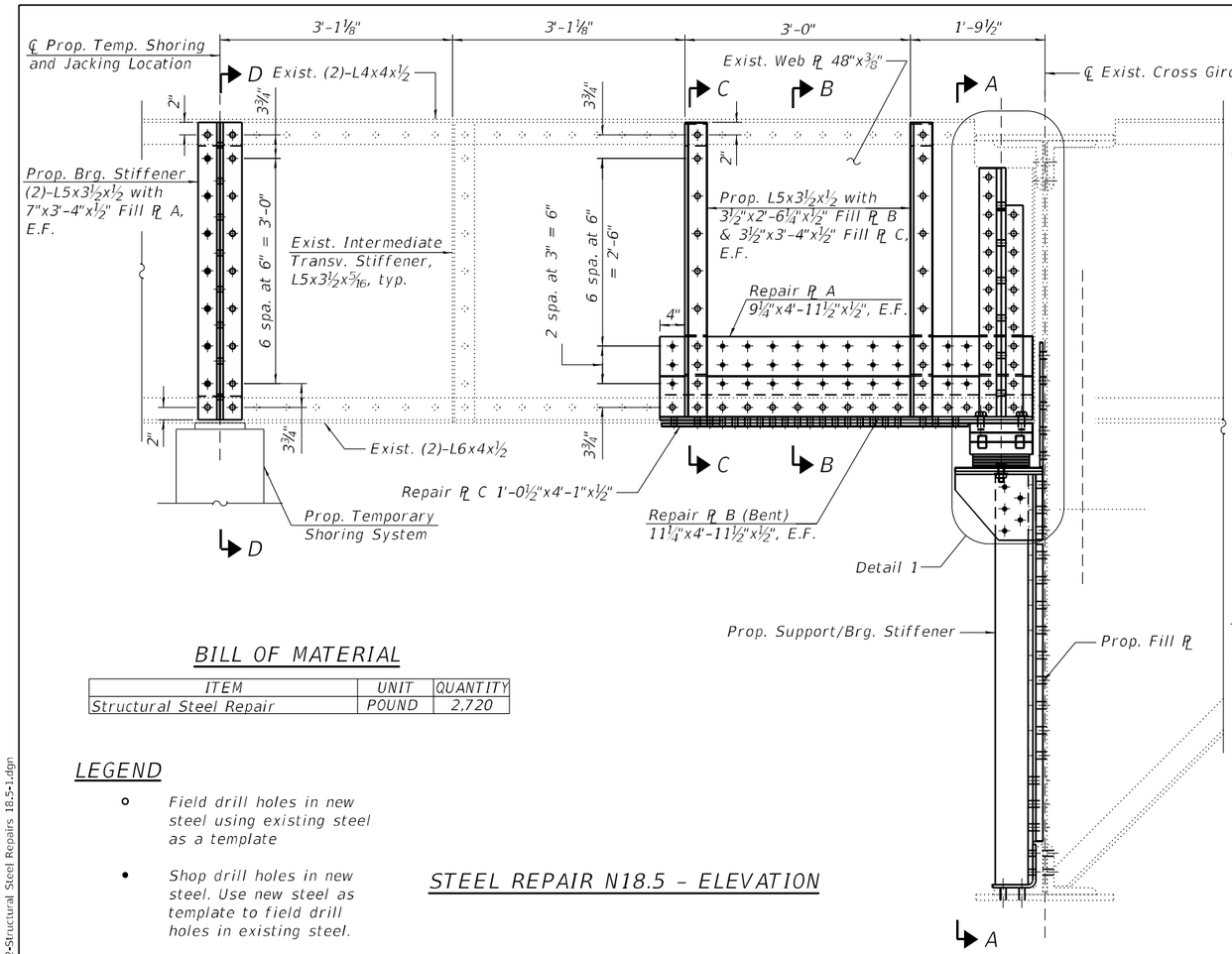

STEEL REPAIR N18.5 - ELEVATION

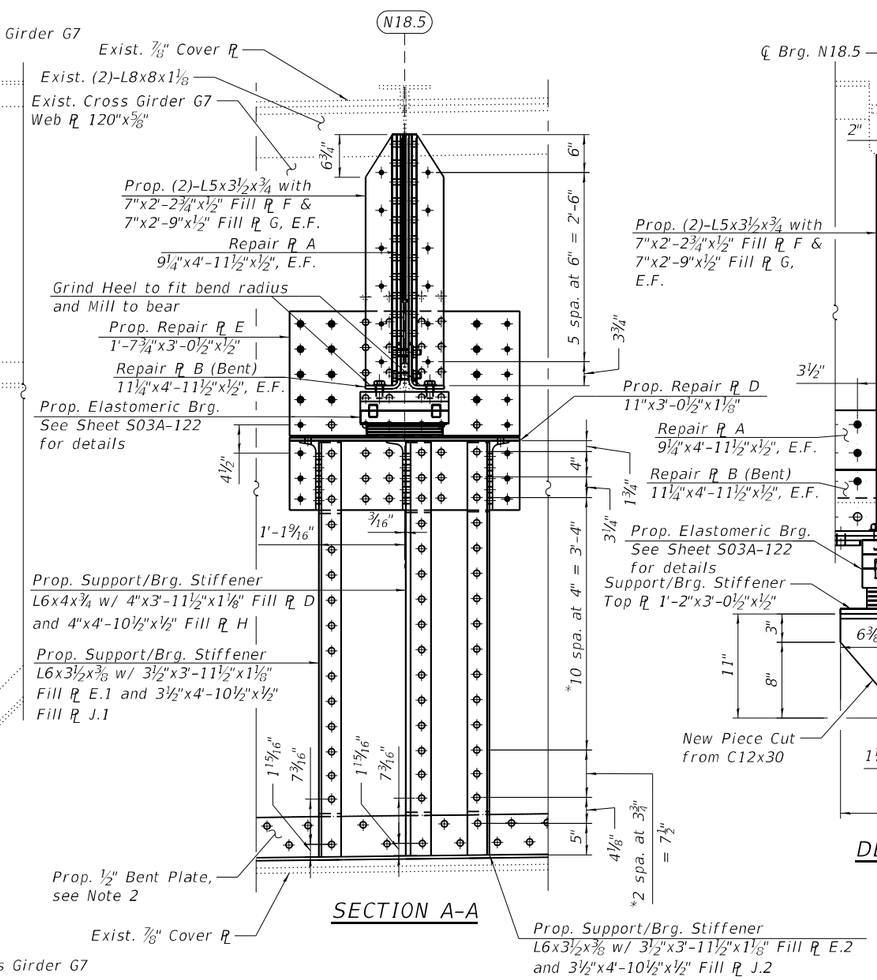

SECTION A-A

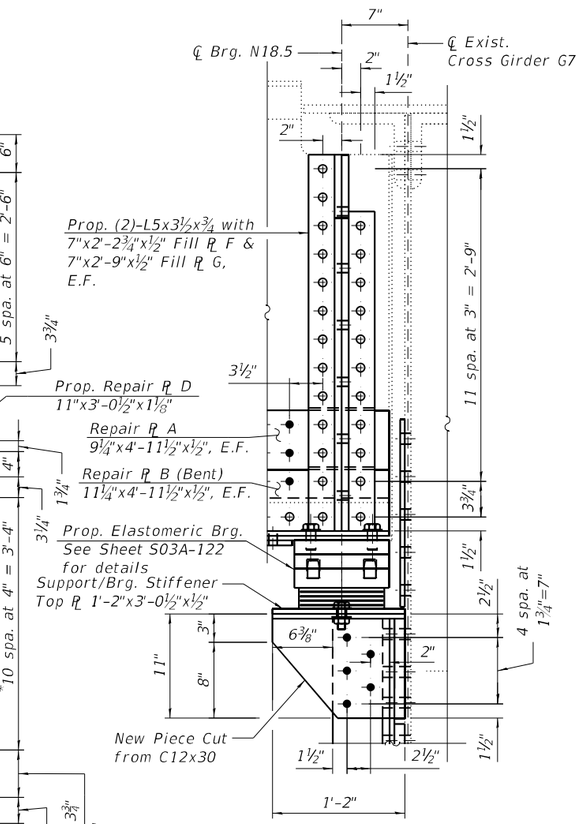

DETAIL 1

*Typ. Each Support/Brg. Stiffener

BILL OF MATERIAL

ITEM	UNIT	QUANTITY
Structural Steel Repair	POUND	2,720

LEGEND

- ○ Field drill holes in new steel using existing steel as a template
- • Shop drill holes in new steel. Use new steel as template to field drill holes in existing steel.

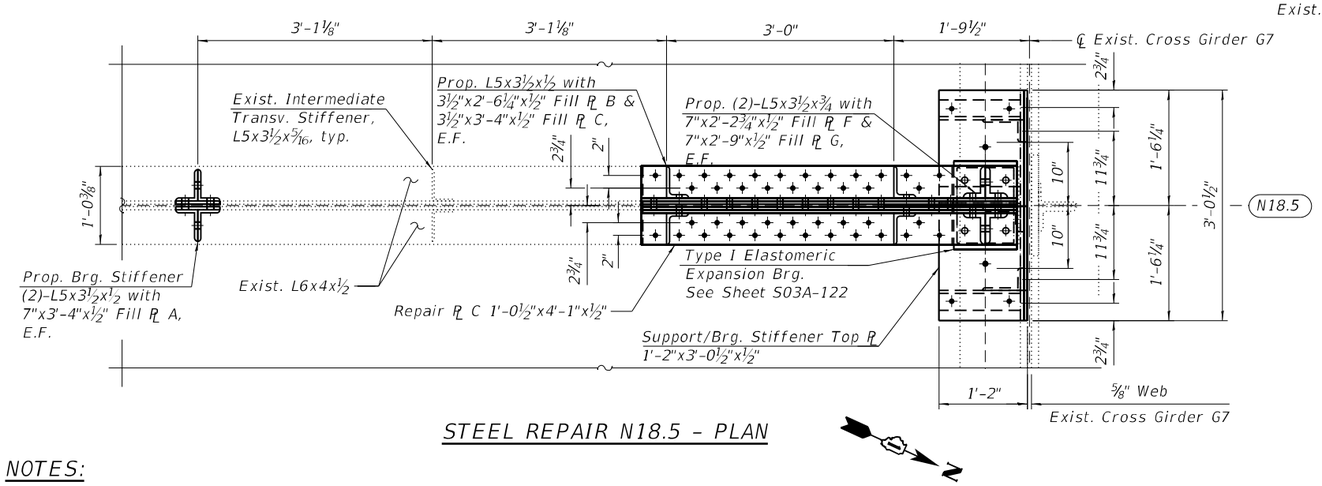

STEEL REPAIR N18.5 - PLAN

SUGGESTED CONSTRUCTION SEQUENCE FOR STRINGER REPAIR:

1. Remove existing intermediate transverse stiffeners at the proposed jacking/temp. shoring location indicated in the "Steel Repair N18.5 - Elevation" and clean/paint newly exposed faces of stringer web according to the Special Provision for "Cleaning and Painting Contact Surface Areas of Existing Steel Structures".
2. Install proposed Fill Plate A and bearing stiffeners at the prop. jacking/temp. shoring location indicated in the "Steel Repair N18.5 - Elevation" and erect prop. Temporary Shoring tower. See Special Provision for "Temporary Shoring."
3. Jack stringer to relieve pressure at existing bearing. The jack capacities for lifting should be based on maximum expected load present during the lift derived from the reactions shown in the Beam Reaction Table included with the plans. The jack capacity provided should be between 50% and 100% greater than the maximum expected load.
4. Remove existing intermediate transverse stiffeners, cross frame gusset plates, stringer bearing stiffeners, elastomeric bearing, support bracket and associated support/bearing stiffeners within the limits of repair area. Clean/paint newly exposed faces of stringer and Girder G7 according to the Special Provision for "Cleaning and Painting Contact Surface Areas of Existing Steel Structures".
5. Install proposed Repair Plate at Girder G7 bottom flange, south face. Install proposed Fill Plates, Repair Plates, Support/Brg. Stiffeners and elastomeric bearing at the connection of Stringer N18.5 to Girder G7.
6. Install proposed Fill Plates, Repair Plates, Intermediate Transverse Stiffeners and Bearing Stiffeners at end of Stringer N18.5 as indicated in the Plans.
7. Remove Temporary Shoring Tower.

NOTES:

1. For Sections B-B, C-C and D-D, and Fill and Repair Plate details, see Sheet S03A-089.
2. For Girder G7 repairs, see Sheet S03A-111.

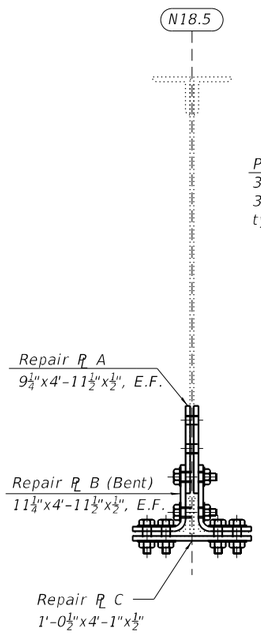

SECTION B-B

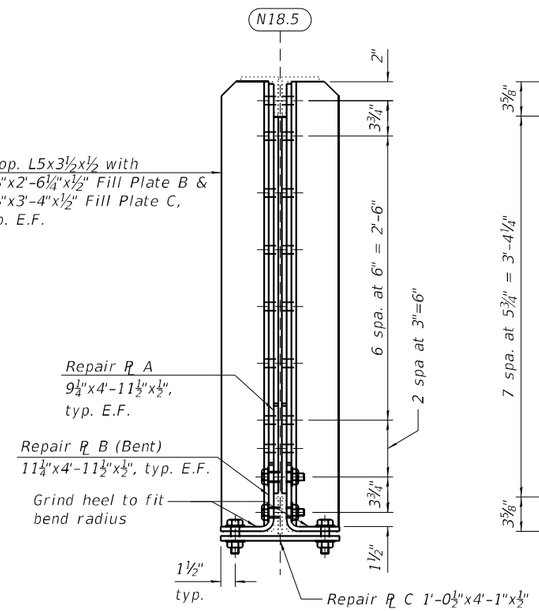

SECTION C-C

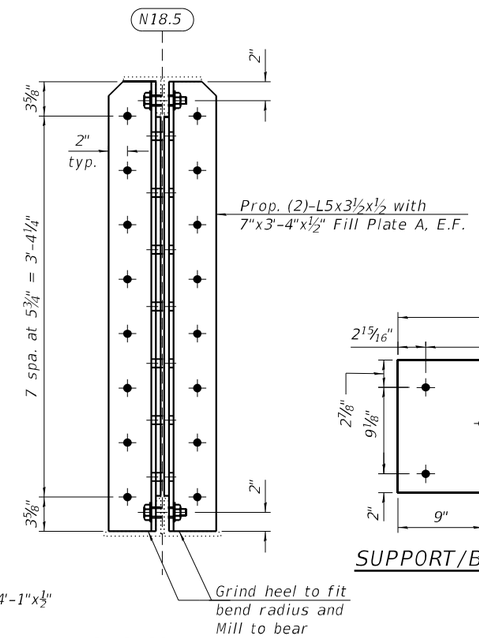

SECTION D-D

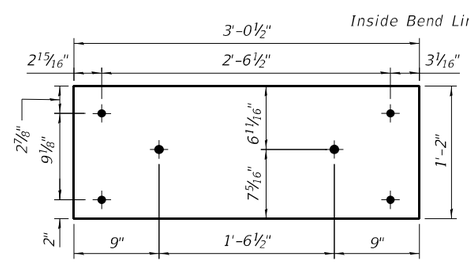

SUPPORT/BRG. STIFFENER TOP PLATE

1'-2"x3'-0½"x½"

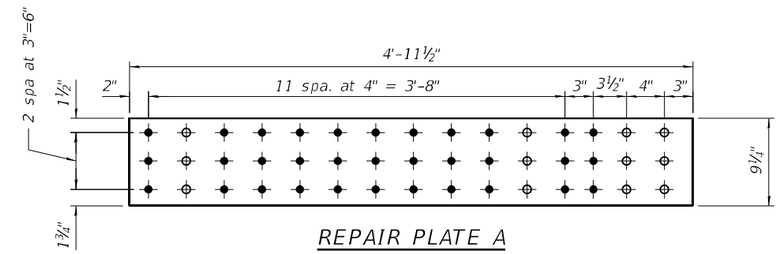

REPAIR PLATE A

(9¼"x4'-11½"x½" PL)

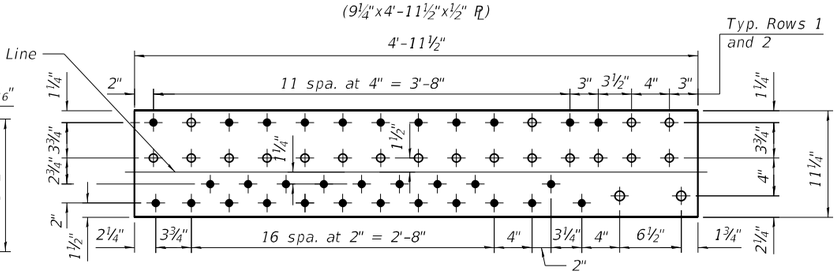

REPAIR PLATE B (BENT)

(Unfolded View)

(11¼"x4'-11½"x½" PL)

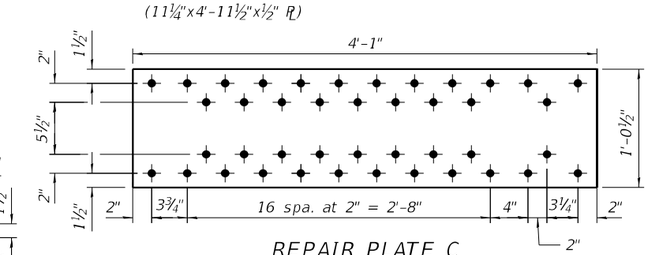

REPAIR PLATE C

(1'-0½"x4'-1"x½" PL)

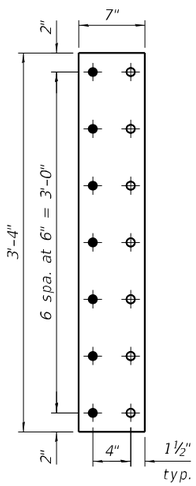

FILL PLATE A

(7"x3'-4"x½" PL)

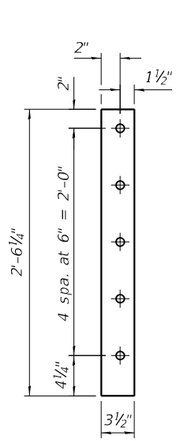

FILL PLATE B

(3½"x2'-6¼"x½" PL)

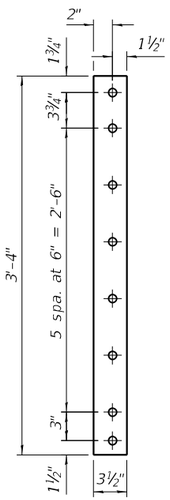

FILL PLATE C

(3½"x3'-4"x½" PL)

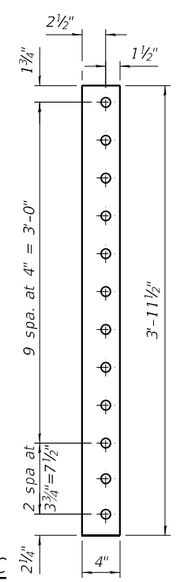

FILL PLATE D

(4"x3'-11½"x1⅛" PL)

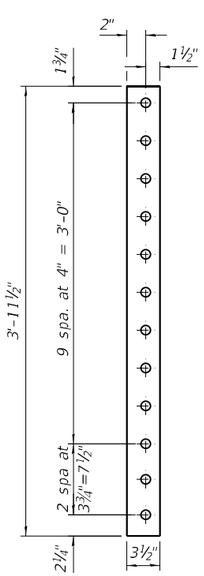

FILL PLATE E.1 & E.2

(3½"x3'-11½"x1⅛" PL)

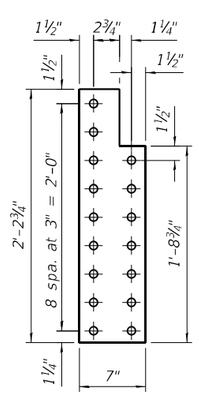

FILL PLATE F

(7"x2'-2¾"x½" PL)

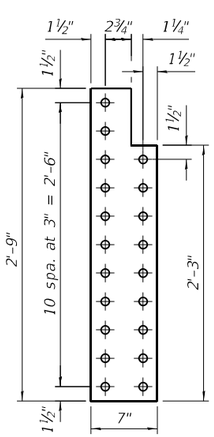

FILL PLATE G

(7"x2'-9"x½" PL)

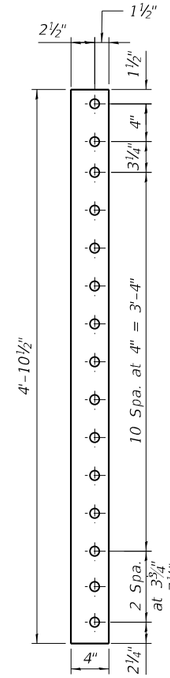

FILL PLATE H

(4"x4'-10½"x½" PL)

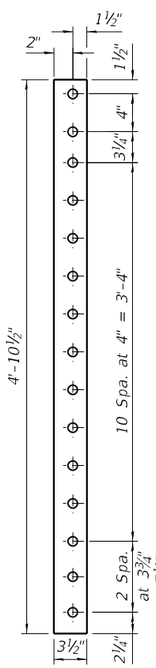

FILL PLATE J.1 & J.2

(3½"x4'-10½"x½" PL)

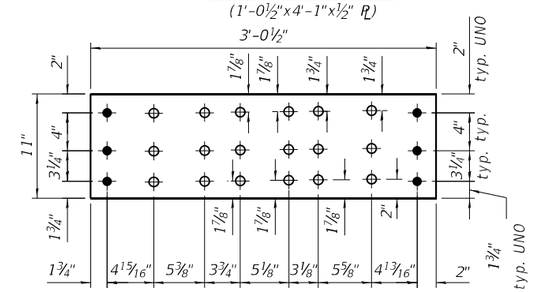

REPAIR PLATE D

(11"x3'-0½"x1⅛" PL)

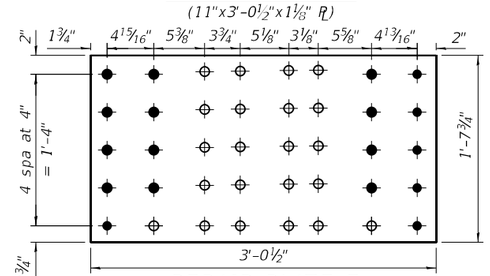

REPAIR PLATE E

(1'-7¾"x3'-0½"x½" PL)

NOTE:

1. For Bill of Material, see Sheet S03A-088.

MODEL: Default
FILE NAME: P:\2004-825 PTB195-014 HBM\WO#7 I-90 Various Overlays\Ashland Ave\Sheet Files\0160133-62K73-S03A-Structural Steel Repairs 18.5-2.dgn
7/2/2024 3:38:35 PM

HBM ENGINEERING GROUP, LLC

USER NAME =	DESIGNED - JJS, LAB	REVISED -	
	CHECKED - MI	REVISED -	
PLOT SCALE =	DRAWN - JJS, EN	REVISED -	
PLOT DATE =	DATE - 4/29/2024	REVISED -	

STATE OF ILLINOIS
DEPARTMENT OF TRANSPORTATION

STRUCTURAL STEEL REPAIRS AT N18.5 (SHT. 2 OF 2)
STRUCTURE NO. 016-0133 (NB)

SHEET S03A-089 OF S03A-148 SHEETS

F.A.I. RTE.	SECTION	COUNTY	TOTAL SHEETS	SHEET NO.
90/94	2020-005-BR	COOK	908	417
		CONTRACT NO. 62K73		
		ILLINOIS	FED. AID PROJECT	

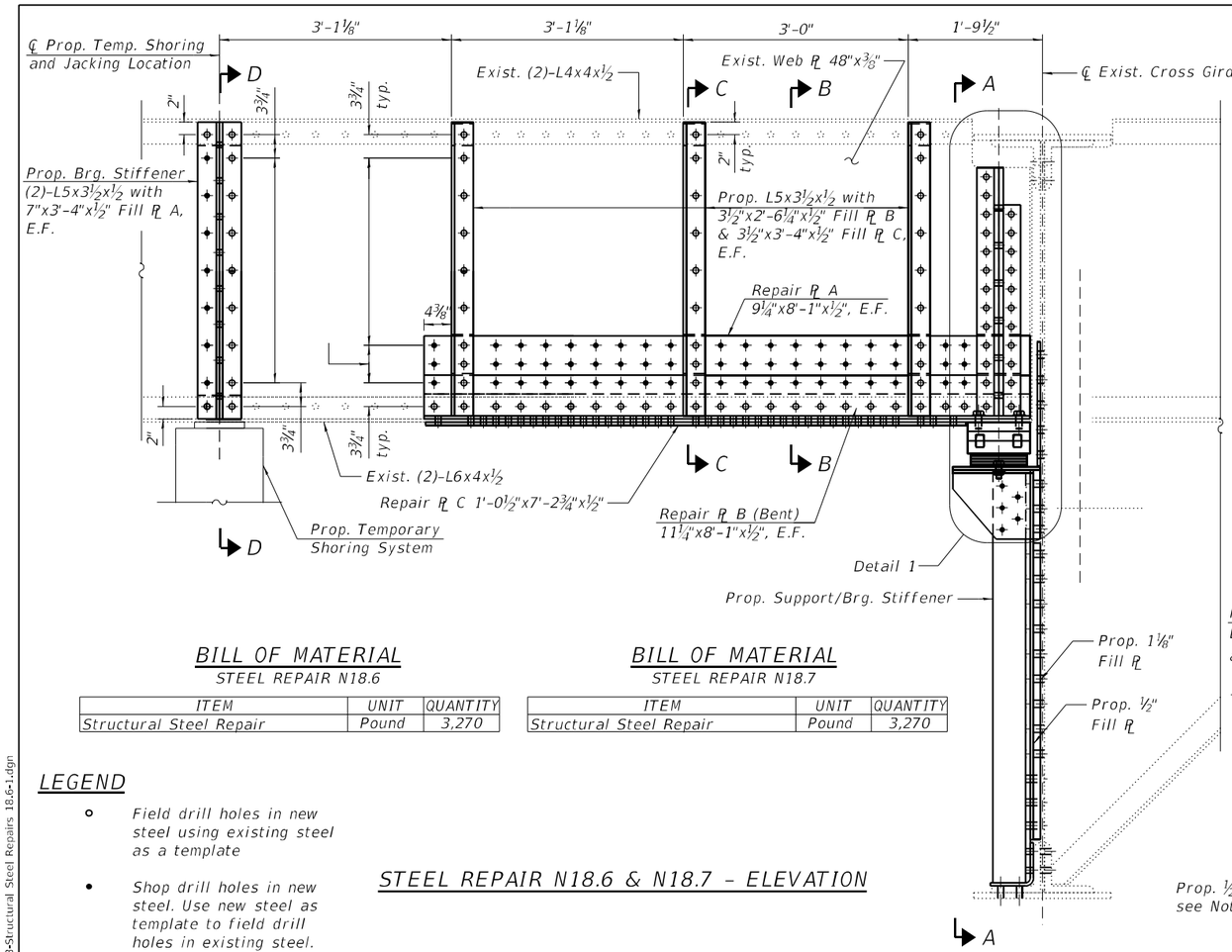

BILL OF MATERIAL
STEEL REPAIR N18.6

ITEM	UNIT	QUANTITY
Structural Steel Repair	Pound	3,270

BILL OF MATERIAL
STEEL REPAIR N18.7

ITEM	UNIT	QUANTITY
Structural Steel Repair	Pound	3,270

LEGEND

- ∘ Field drill holes in new steel using existing steel as a template
- • Shop drill holes in new steel. Use new steel as template to field drill holes in existing steel.

STEEL REPAIR N18.6 & N18.7 - ELEVATION

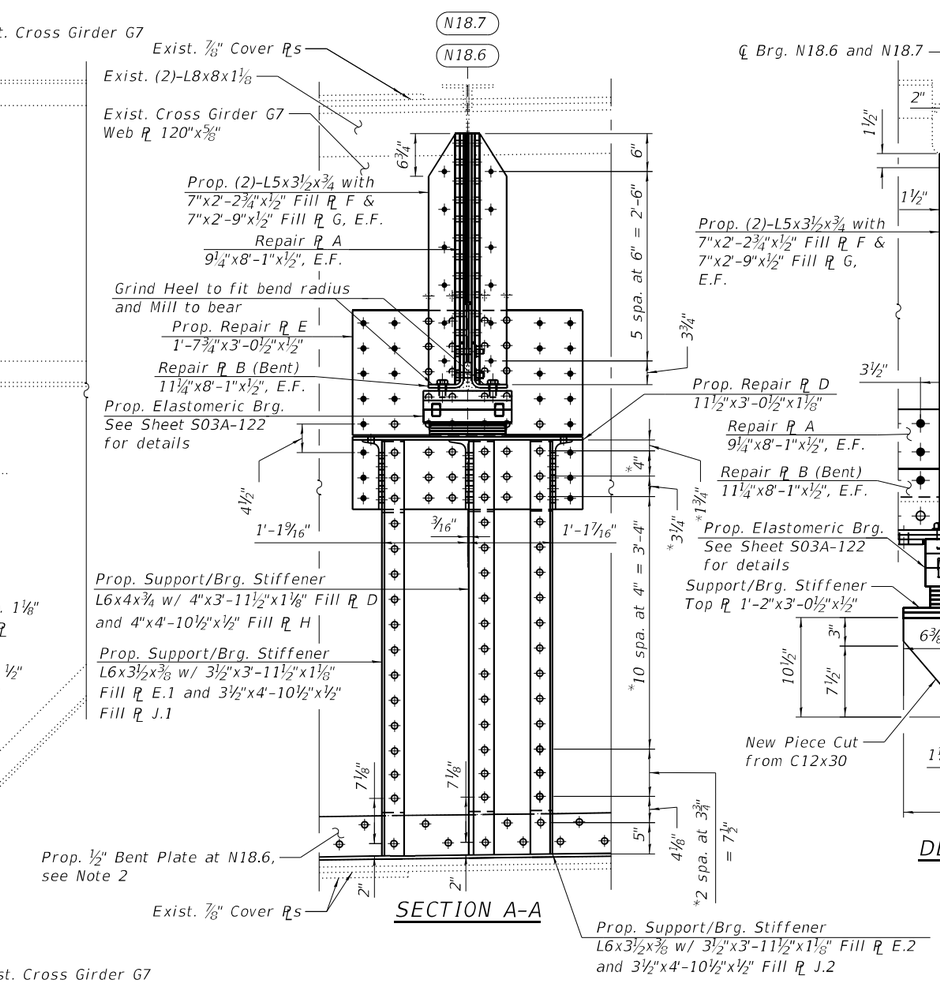

SECTION A-A

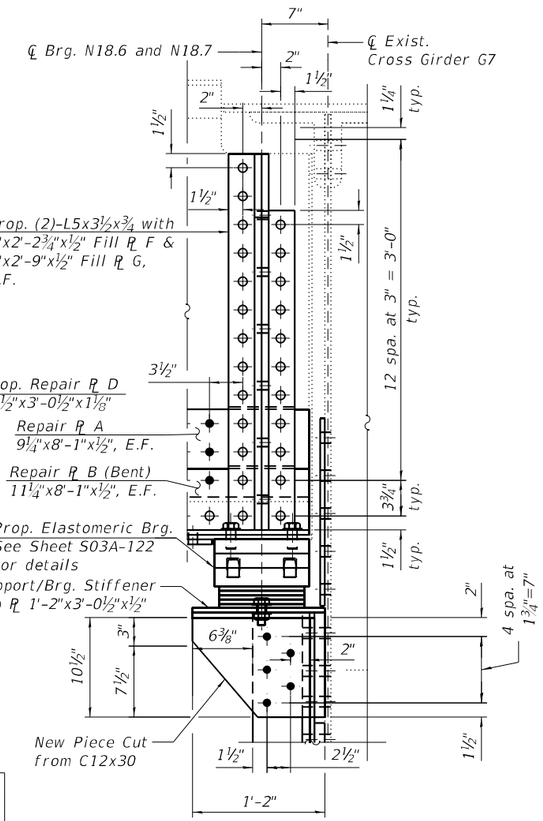

DETAIL 1

*Typ. Each Support/Brg. Stiffener

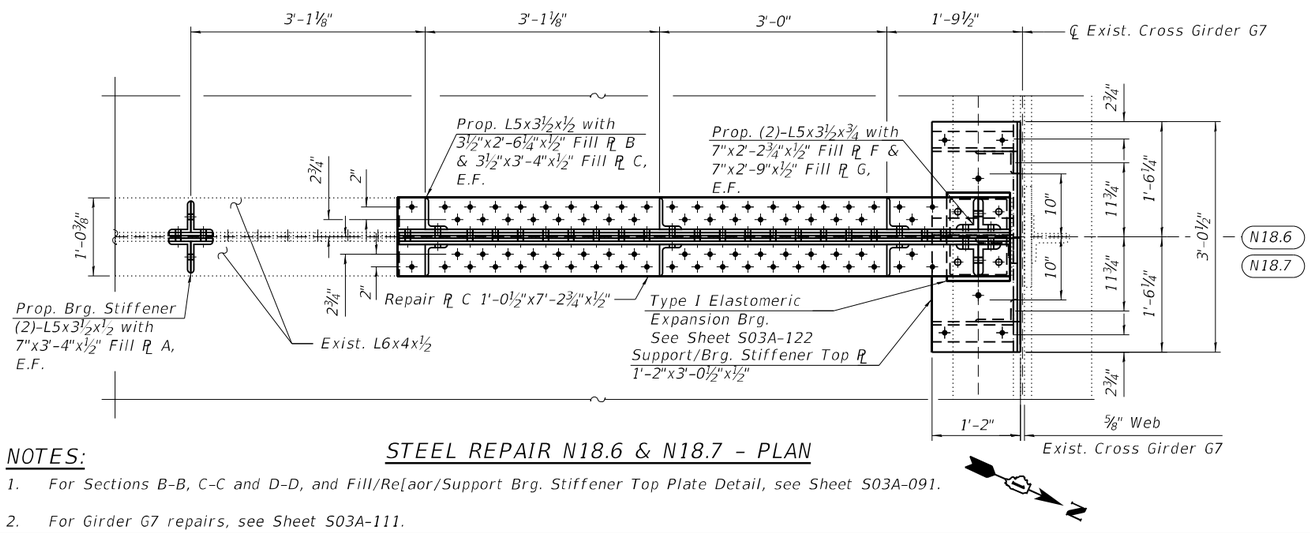

STEEL REPAIR N18.6 & N18.7 - PLAN

NOTES:

1. For Sections B-B, C-C and D-D, and Fill/Re[aor/Support Brg. Stiffener Top Plate Detail, see Sheet S03A-091.
2. For Girder G7 repairs, see Sheet S03A-111.

SUGGESTED CONSTRUCTION SEQUENCE FOR STRINGER REPAIR:

1. Remove existing intermediate transverse stiffeners at the proposed jacking/temp. shoring location indicated in the "Steel Repair N18.6 & N18.7 - Elevation" and clean/paint newly exposed faces of stringer web according to the Special Provision for "Cleaning and Painting Contact Surface Areas of Existing Steel Structures".
2. Install proposed Fill Plate A and bearing stiffeners at the prop. jacking/temp. shoring location indicated in the "Steel Repair N18.6 & N18.7 - Elevation" and erect prop. Temporary Shoring tower. See Special Provision for "Temporary Shoring."
3. Jack stringer to relieve pressure at existing bearing. The jack capacities for lifting should be based on maximum expected load present during the lift derived from the reactions shown in the Beam Reaction Table included with the plans. The jack capacity provided should be between 50% and 100% greater than the maximum expected load.
4. Remove existing intermediate transverse stiffeners, cross frame gusset plates, stringer bearing stiffeners, elastomeric bearing, support bracket and associated support/bearing stiffeners within the limits of repair area. Clean/paint newly exposed faces of stringer and Girder G7 according to the Special Provision for "Cleaning and Painting Contact Surface Areas of Existing Steel Structures".
5. Install proposed Repair Plate at Girder G7 bottom flange, south face. Install proposed Fill Plates, Repair Plates, Support/Brg. Stiffeners and elastomeric bearing at the connection of Stringers N18.6 and N18.7 to Girder G7.
6. Install proposed Fill Plates, Repair Plates, Intermediate Transverse Stiffeners and Bearing Stiffeners at end of Stringers N18.6 and N18.7 as indicated in the Plans.
7. Remove Temporary Shoring Tower.

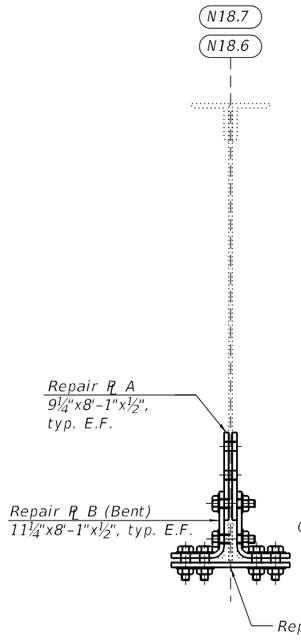

SECTION B-B

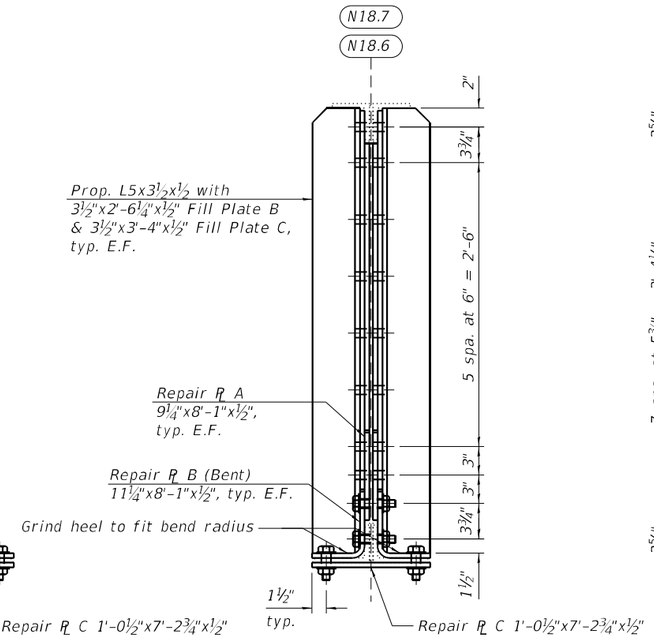

SECTION C-C

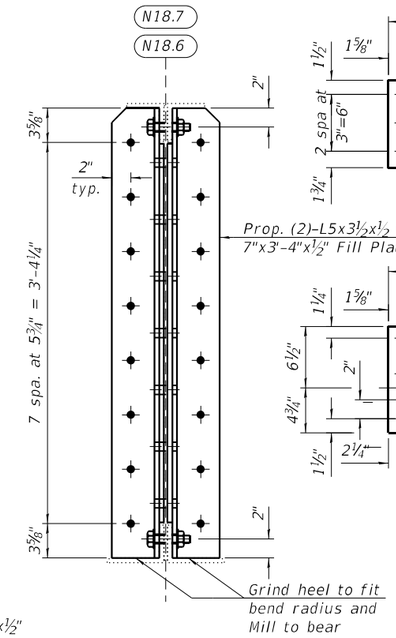

SECTION D-D

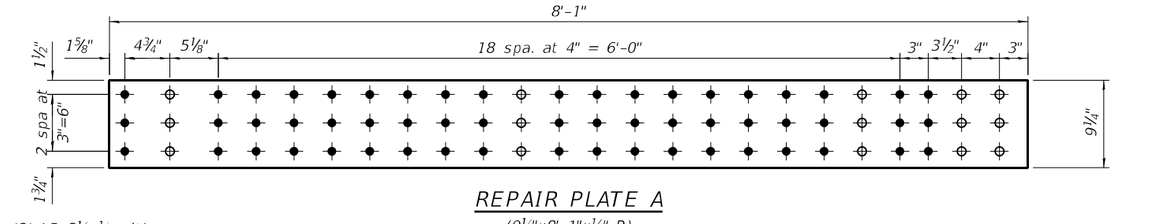

REPAIR PLATE A

(9¼"x8'-1"x½" PL)

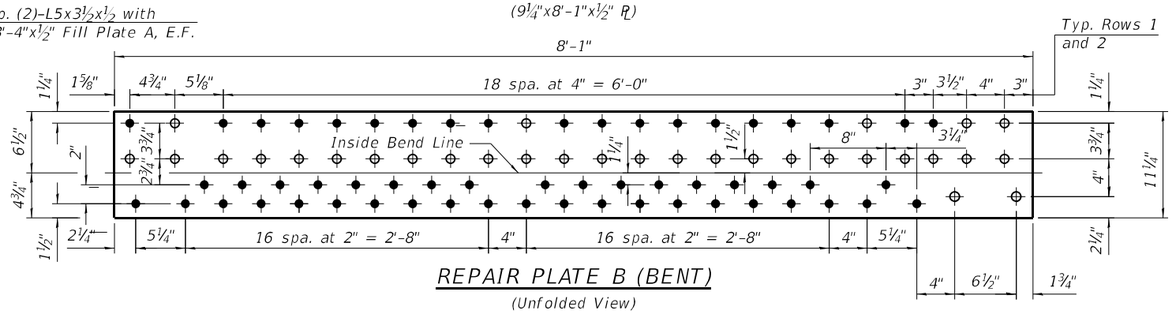

REPAIR PLATE B (BENT)

(Unfolded View)

(11¼"x8'-1"x½" PL)

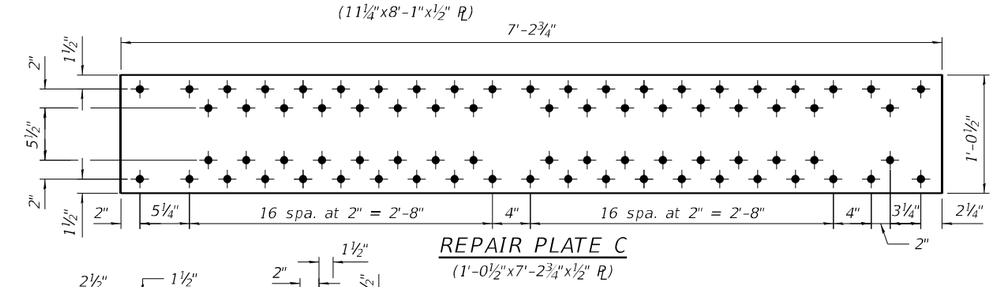

REPAIR PLATE C

(1'-0½"x7'-2¾"x½" PL)

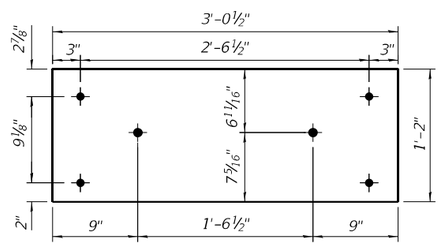

SUPPORT/BRG. STIFFENER TOP PLATE

(1'-2"x3'-0½"x½" PL)

NOTE:

1. For Bill of Material, see Sheet S03A-090.

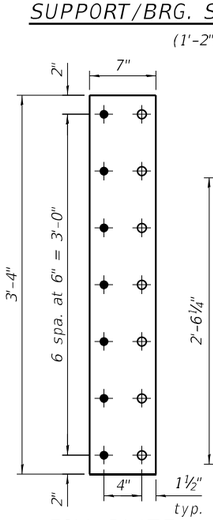

FILL PLATE A

(7"x3'-4"x½" PL)

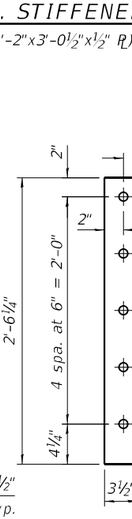

FILL PLATE B

(3½"x2'-6¼"x½" PL)

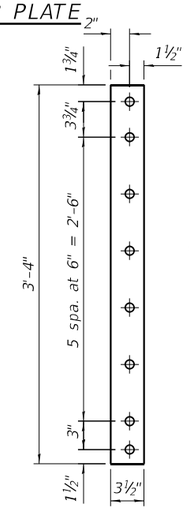

FILL PLATE C

(3½"x3'-4"x½" PL)

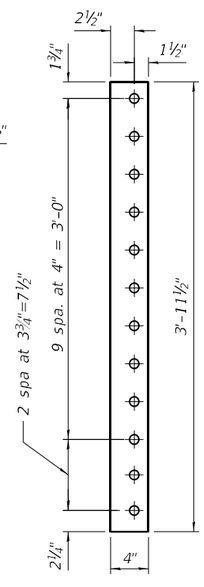

FILL PLATE D

(4"x3'-11½"x1⅛" PL)

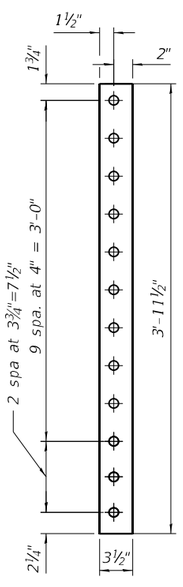

FILL PLATES

E.1 AND E.2

(3½"x3'-11½"x1⅛" PL)

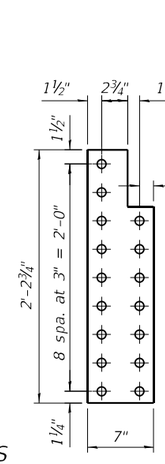

FILL PLATE F

(7"x2'-2¾"x½" PL)

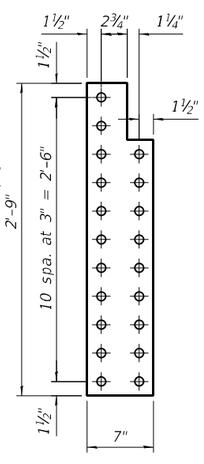

FILL PLATE G

(7"x2'-9"x½" PL)

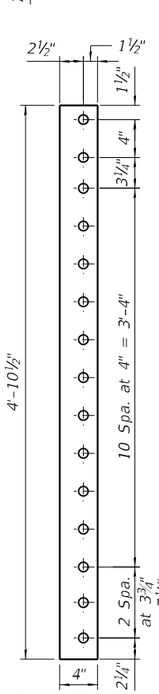

FILL PLATE H

(4"x4'-10½"x½" PL)

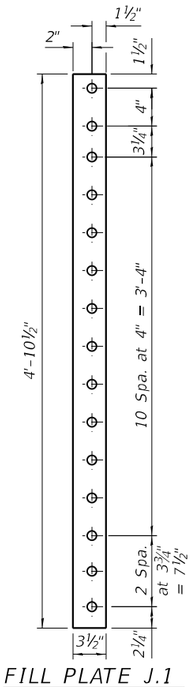

FILL PLATE J.1

& J.2

(3½"x4'-10½"x½" PL)

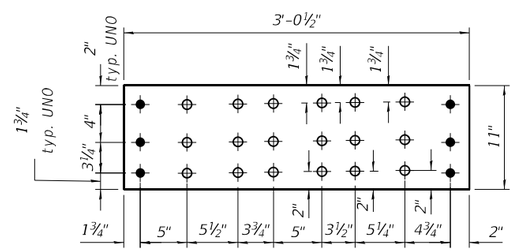

REPAIR PLATE D

(11"x3'-0½"x1⅛" PL)

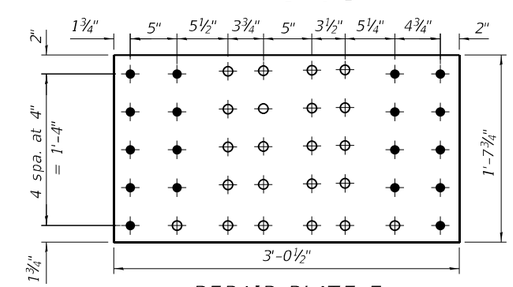

REPAIR PLATE E

(1'-7¾"x3'-0½"x½" PL)

MODEL: Default
FILE NAME: P:\2004825 PTB195-014 HBM\WO#7 I-90 Various Overlays\Ashland Ave\Sheet Files\0160133-62K73-S84A-Structural Steel Repairs 18.6-2.dgn

7/2/2024 3:38:44 PM

HBM ENGINEERING GROUP, LLC

USER NAME =	DESIGNED - JJS, LAB	REVISED -	
	CHECKED - MI	REVISED -	
PLOT SCALE =	DRAWN - JJS, EN	REVISED -	
PLOT DATE =	DATE - 4/29/2024	REVISED -	

STATE OF ILLINOIS
DEPARTMENT OF TRANSPORTATION

STRUCTURAL STEEL REPAIRS AT N18.6 & N18.7 (SHT. 2 OF 2)
STRUCTURE NO. 016-0133 (NB)

SHEET S03A-091 OF S03A-148 SHEETS

F.A.I. RTE.	SECTION	COUNTY	TOTAL SHEETS	SHEET NO.
90/94	2020-005-BR	COOK	908	419
		CONTRACT NO. 62K73		
		ILLINOIS	FED. AID PROJECT	

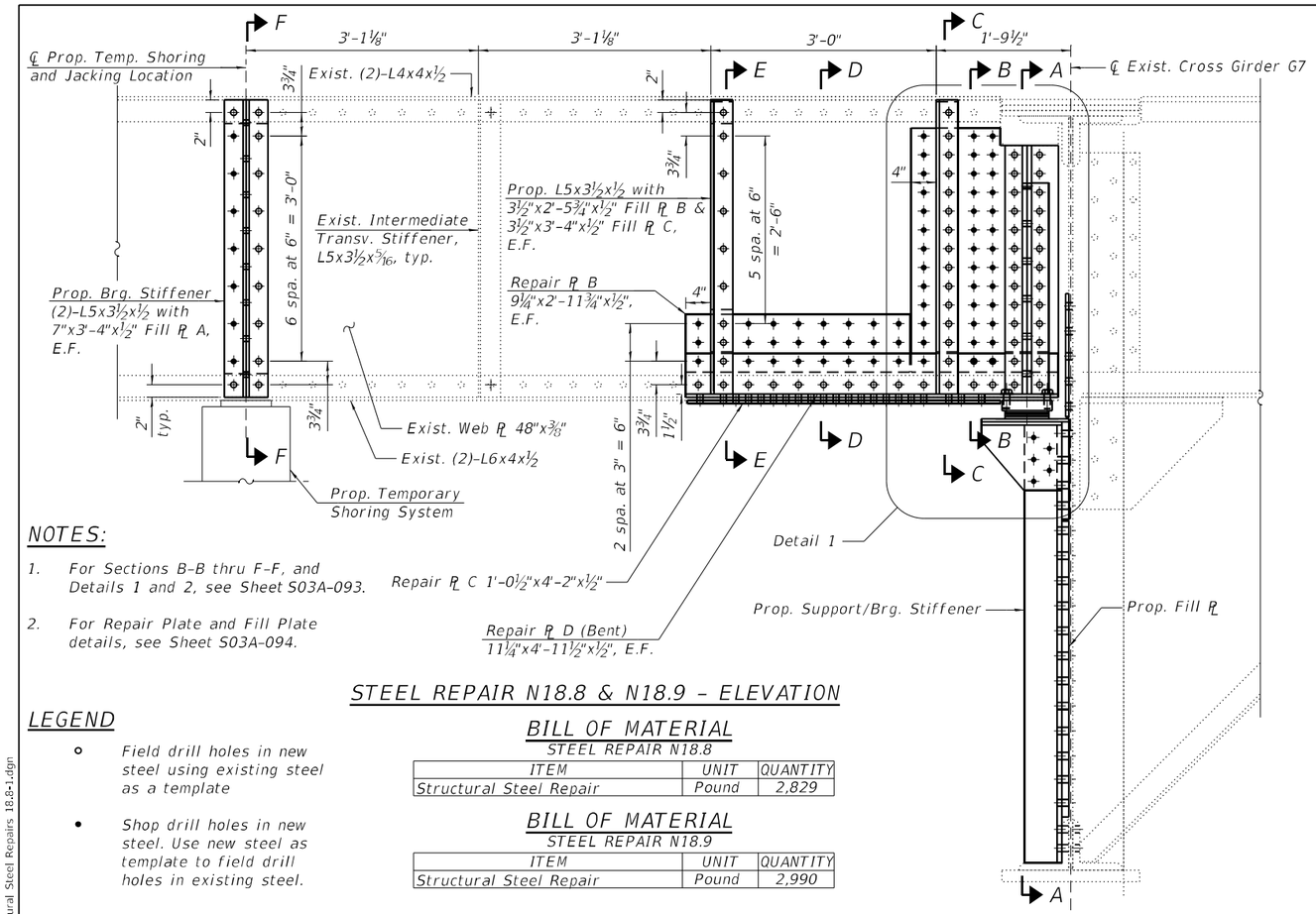

NOTES:

1. For Sections B-B thru F-F, and Details 1 and 2, see Sheet S03A-093.
2. For Repair Plate and Fill Plate details, see Sheet S03A-094.

STEEL REPAIR N18.8 & N18.9 - ELEVATION

LEGEND

- ○ Field drill holes in new steel using existing steel as a template
- • Shop drill holes in new steel. Use new steel as template to field drill holes in existing steel.

BILL OF MATERIAL
STEEL REPAIR N18.8

ITEM	UNIT	QUANTITY
Structural Steel Repair	Pound	2,829

BILL OF MATERIAL
STEEL REPAIR N18.9

ITEM	UNIT	QUANTITY
Structural Steel Repair	Pound	2,990

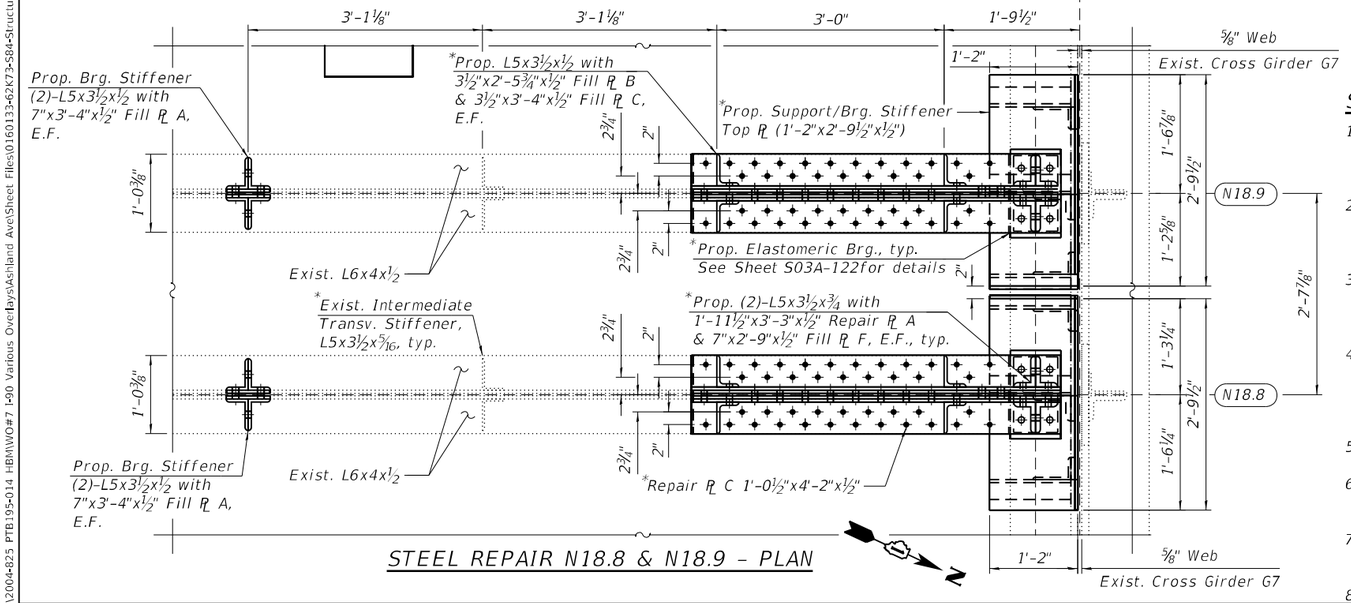

STEEL REPAIR N18.8 & N18.9 - PLAN

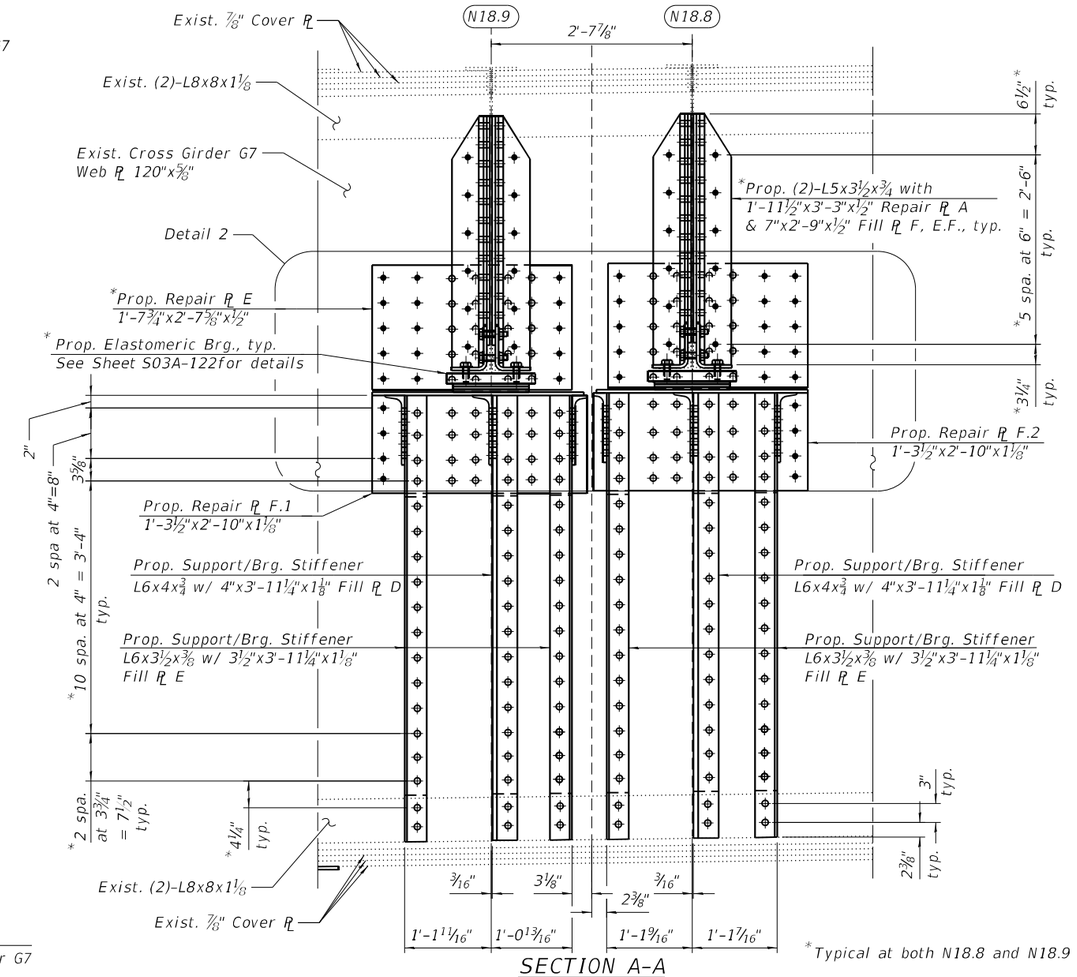

SECTION A-A

*Typical at both N18.8 and N18.9

SUGGESTED CONSTRUCTION SEQUENCE FOR STRINGER REPAIR:

1. Remove existing intermediate transverse stiffeners at the proposed jacking/temp. shoring location indicated in the "Steel Repair N18.8 & N18.9 - Elevation" and clean/paint newly exposed faces of stringer web according to the Special Provision for "Cleaning and Painting Contact Surface Areas of Existing Steel Structures".
2. Install prop. Fill Plate A and bearing stiffeners at the prop. jacking/temp. shoring location indicated in the "Steel Repair N18.8 & N18.9 - Elevation" and erect prop. Temporary Shoring tower. See Special Provision for "Temporary Shoring."
3. Jack stringer to relieve pressure at existing bearing. The jack capacities for lifting should be based on maximum expected load present during the lift derived from the reactions shown in the Beam Reaction Table included with the plans. The jack capacity provided should be between 50% and 100% greater than the maximum expected load.
4. Remove existing intermediate transverse stiffeners, cross frame gusset plates, stringer bearing stiffeners, elastomeric bearing, support bracket and associated support/bearing stiffeners within the limits of repair area. Clean/paint newly exposed faces of stringer and Girder G7 according to the Special Provision for "Cleaning and Painting Contact Surface Areas of Existing Steel Structures".
5. Construct templates for location of existing rivets, bolts and fabrication of fill and repair plates.
6. Install proposed Fill Plates, Repair Plates, Support/Brg. Stiffeners and elastomeric bearing at the connection of Stringers N18.8 and N18.9 to Girder G7.
7. Install proposed Fill Plates, Repair Plates, Intermediate Transverse Stiffeners and Bearing Stiffeners at ends of Stringers N18.8 and N18.9 as indicated in the Plans.
8. Remove Temporary Shoring Tower.

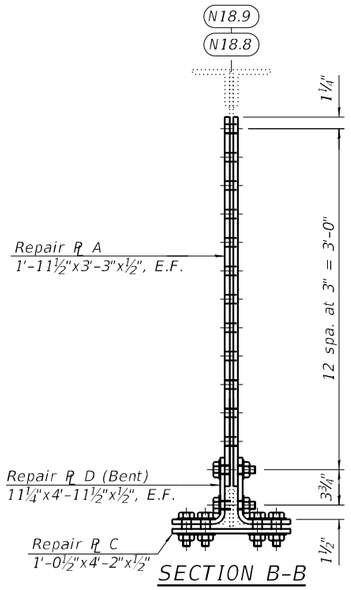

SECTION B-B

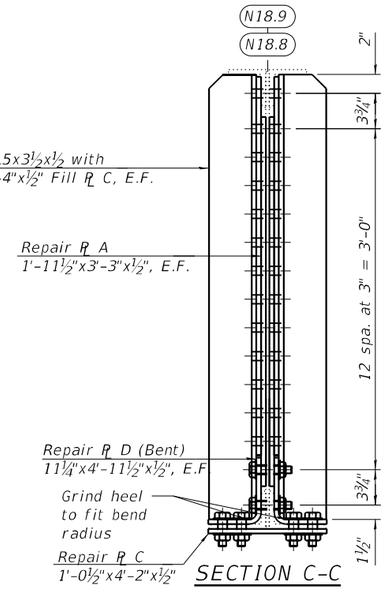

SECTION C-C

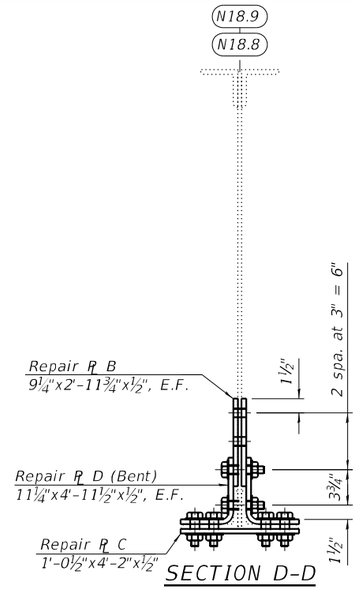

SECTION D-D

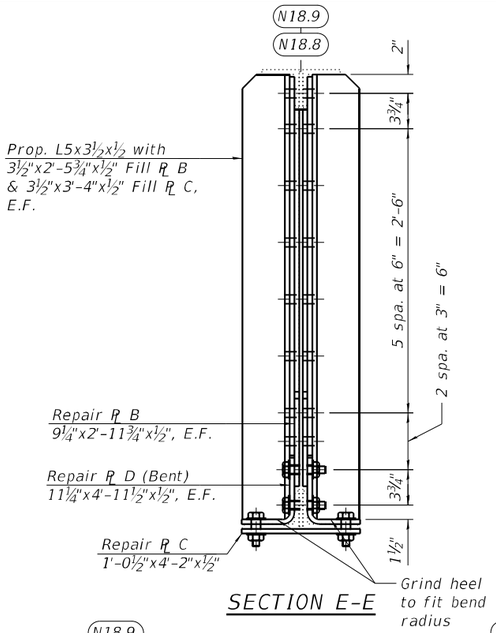

SECTION E-E

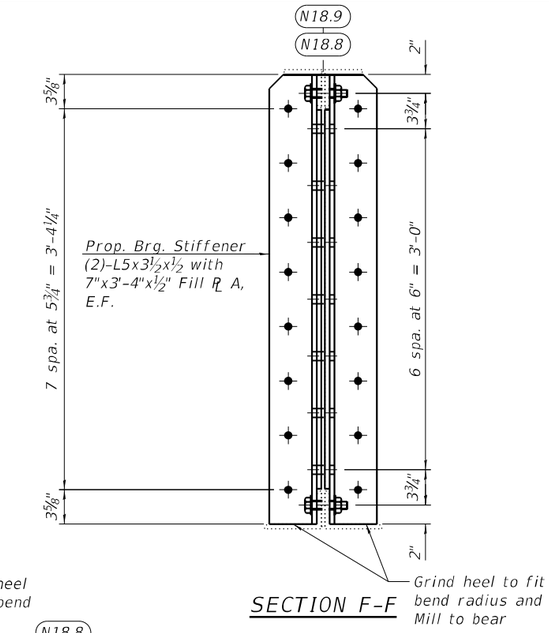

SECTION F-F

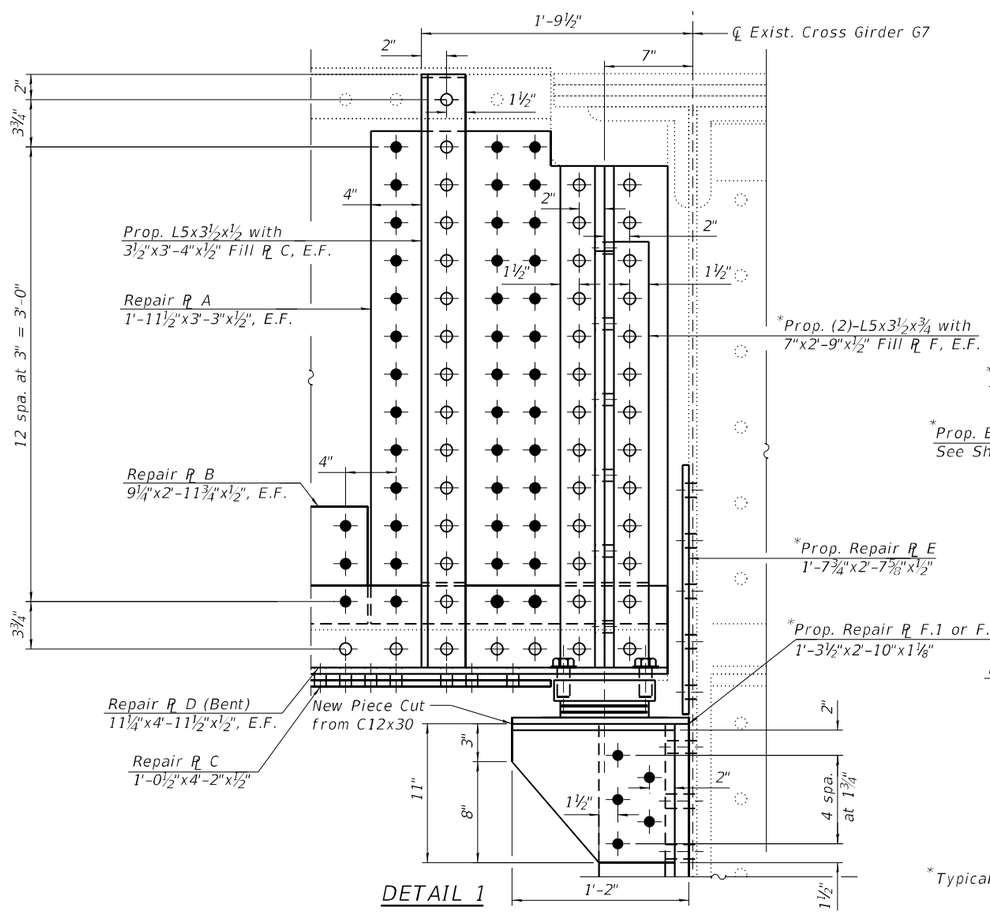

DETAIL 1

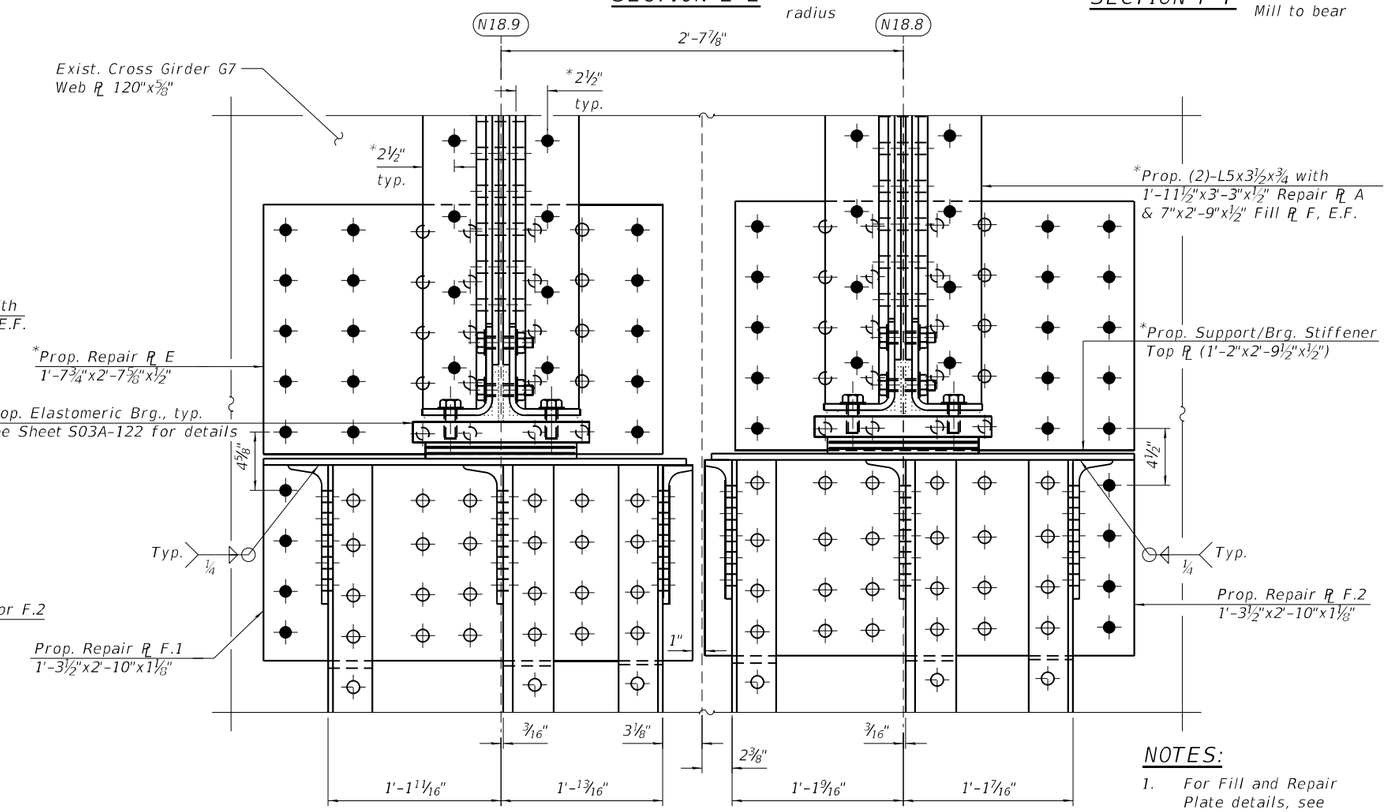

DETAIL 2

*Typical at both N18.8 and N18.9

NOTES:

1. For Fill and Repair Plate details, see Sheet S03A-094.
2. For Bill of Material, see Sheet S03A-092.

HBM ENGINEERING GROUP, LLC	USER NAME =	DESIGNED - JJS, LAB	REVISED -	STATE OF ILLINOIS DEPARTMENT OF TRANSPORTATION	STRUCTURAL STEEL REPAIRS AT N18.8 & N18.9 (SHT. 2 OF 3) STRUCTURE NO. 016-0133 (NB)
		CHECKED - MI	REVISED -		
	PLOT SCALE =	DRAWN - JJS, EN	REVISED -		
	PLOT DATE =	DATE - 4/29/2024	REVISED -		SHEET S03A-093 OF S03A-148 SHEETS

F.A.I. RTE.	SECTION	COUNTY	TOTAL SHEETS	SHEET NO.
90/94	2020-005-BR	COOK	908	421
		CONTRACT NO. 62K73		
		ILLINOIS FED. AID PROJECT		

MODEL: Default
FILE NAME: P:\2004-825 PTB195-014 HBM\WO#7 I-90 Various Overlays\Ashland Ave\Sheet Files\0160133-62K73-S85A-Structural Steel Repairs 18.8-2.dgn
4/30/2024 3:21:48 PM

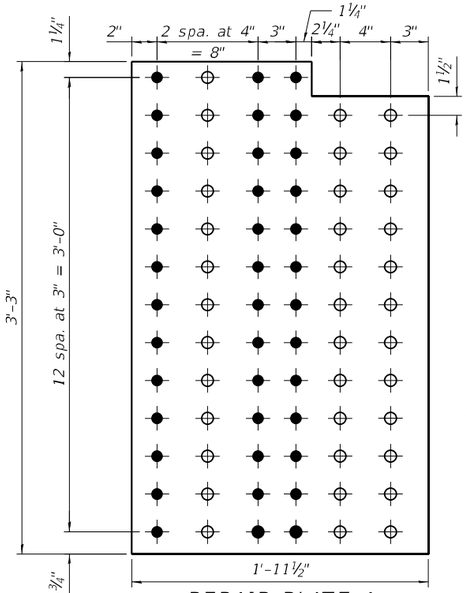

REPAIR PLATE A

(1'-11½"x3'-3"x½" PL)

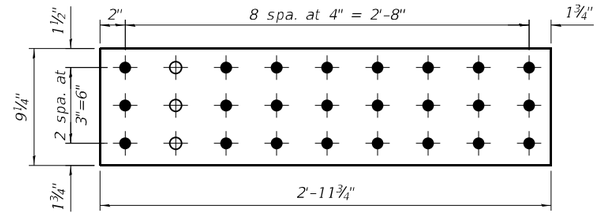

REPAIR PLATE B

(9¼"x2'-11¾"x½" PL)

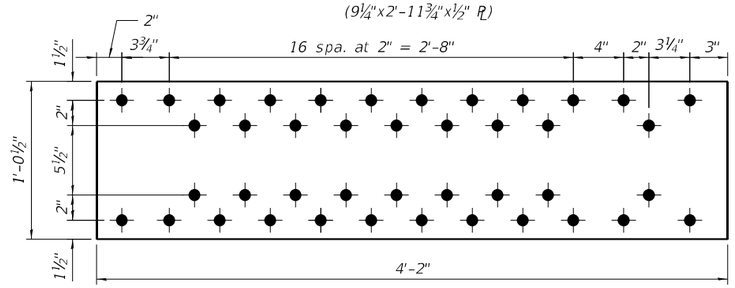

REPAIR PLATE C

(1'-0½"x4'-2"x½" PL)

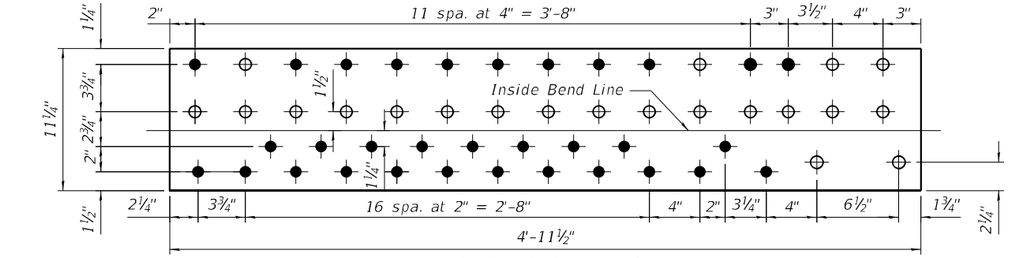

REPAIR PLATE D

(11¼"x4'-11½"x½" PL)

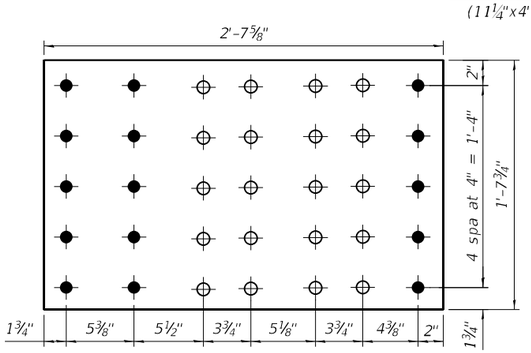

REPAIR PLATE E

(1'-7¾"x2'-7⅝"x½" PL)

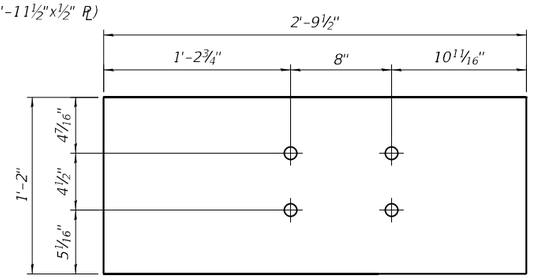

SUPPORT/BRG. STIFFENER TOP PLATE

(1'-2"x2'-9½"x½" PL)

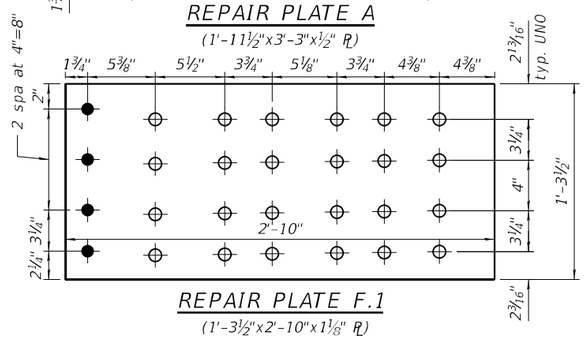

REPAIR PLATE F.1

(1'-3½"x2'-10"x1⅛" PL)

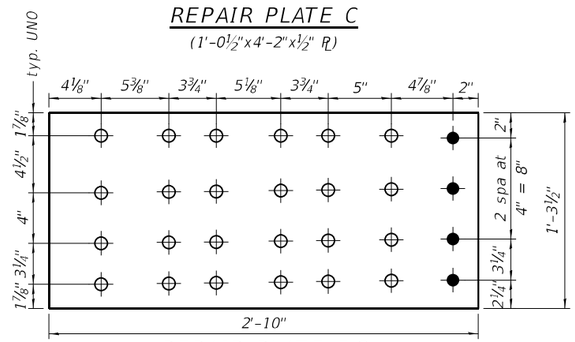

REPAIR PLATE F.2

(1'-3½"x2'-10"x1⅛" PL)

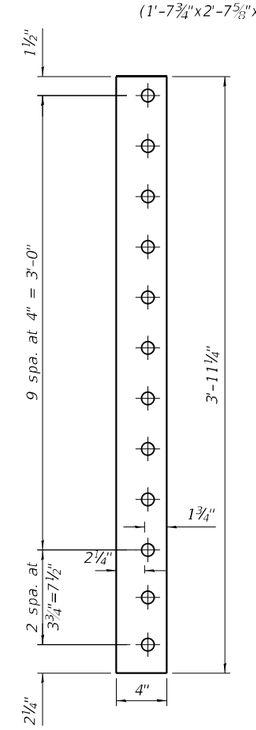

FILL PLATE D

(4"x3'-11¼"x1⅛" PL)

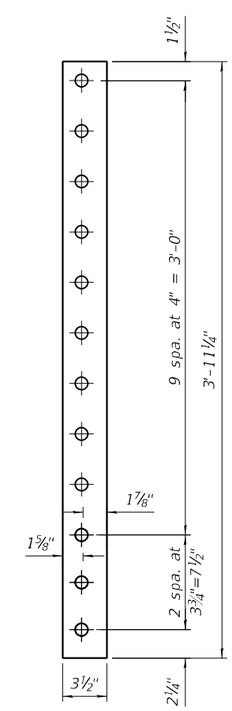

FILL PLATE E

(3½"x3'-11¼"x1⅛" PL)

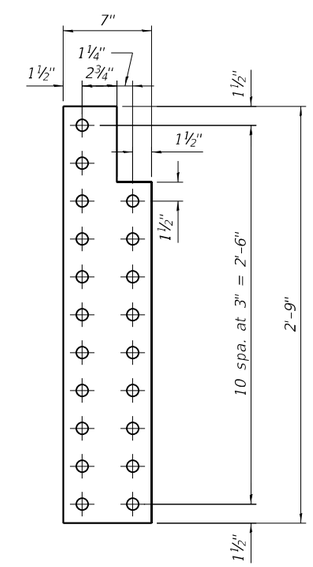

FILL PLATE F

(7"x2'-9"x½" PL)

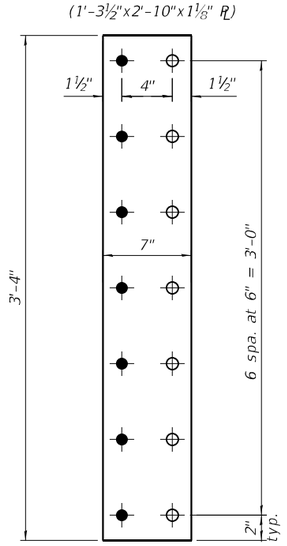

FILL PLATE A

(7"x3'-4"x½" PL)

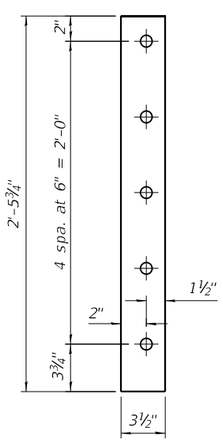

FILL PLATE B

(3½"x2'-5¾"x½" PL)

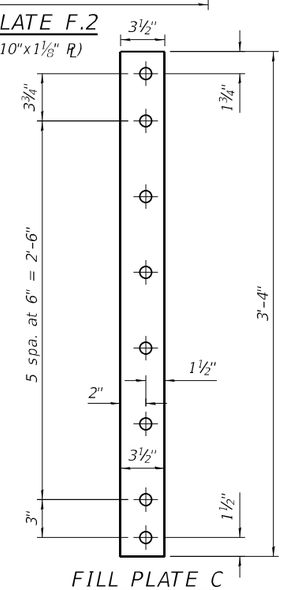

FILL PLATE C

(3½"x3'-4"x½" PL)

NOTE:

1. For Bill of Material, see Sheet S03A-092.

USER NAME =	DESIGNED - JJS, LAB	REVISED -	
	CHECKED - MI	REVISED -	
PLOT SCALE =	DRAWN - JJS, EN	REVISED -	
PLOT DATE =	DATE - 4/29/2024	REVISED -	

HBM ENGINEERING GROUP, LLC

STATE OF ILLINOIS
DEPARTMENT OF TRANSPORTATION

STRUCTURAL STEEL REPAIRS AT N18.8 & N18.9 (SHT. 3 OF 3)
STRUCTURE NO. 016-0133 (NB)

SHEET S03A-094 OF S03A-148 SHEETS

F.A.I. RTE.	SECTION	COUNTY	TOTAL SHEETS	SHEET NO.
90/94	2020-005-BR	COOK	908	422
		CONTRACT NO. 62K73		
		ILLINOIS	FED. AID PROJECT	

MODEL: Default
FILE NAME: P:\2004-825 PTB 195-014 HBM\WO#7 I-90 Various Overlays\Ashland Ave\Sheet Files\0160133-62K73-S85B-Structural Steel Repairs 18.8-3.dgn
4/30/2024 3:21:50 PM

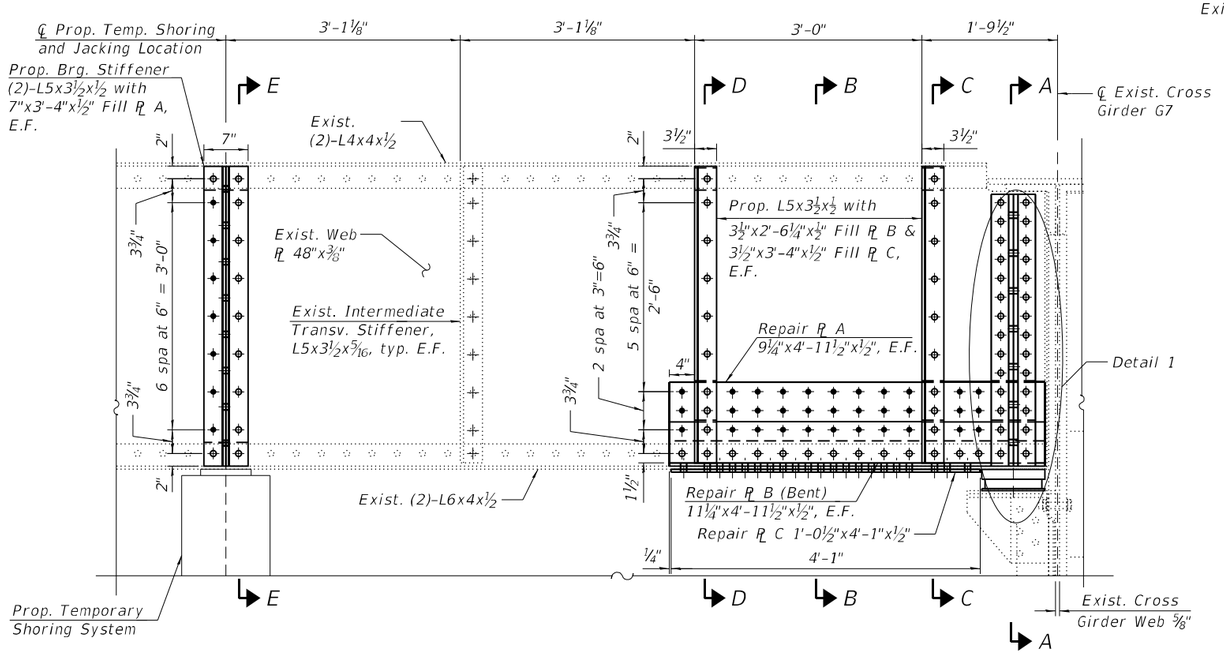

STEEL REPAIR N18.13 - ELEVATION

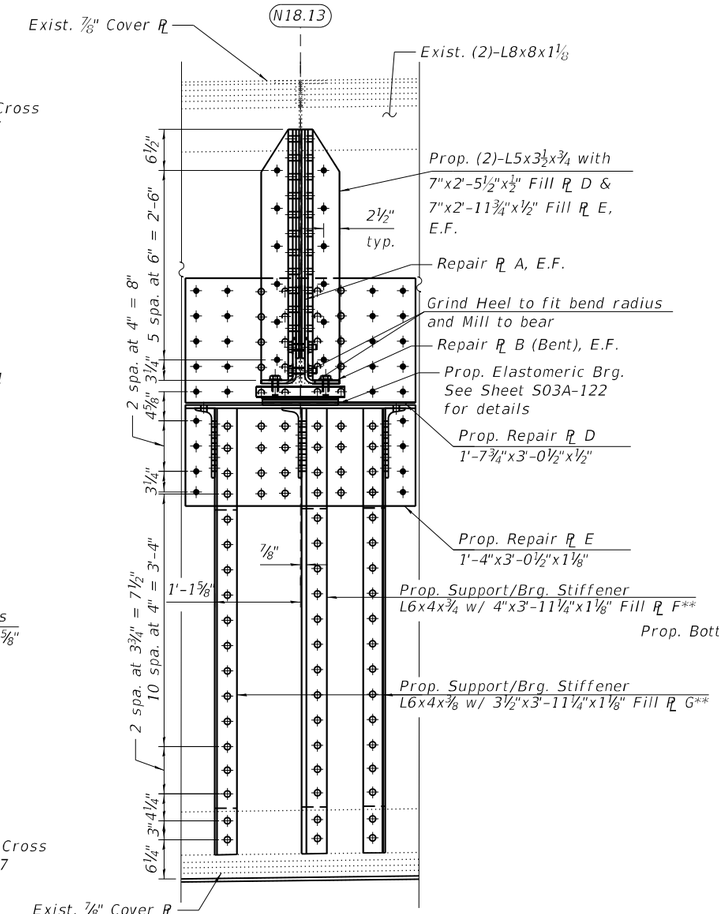

SECTION A-A

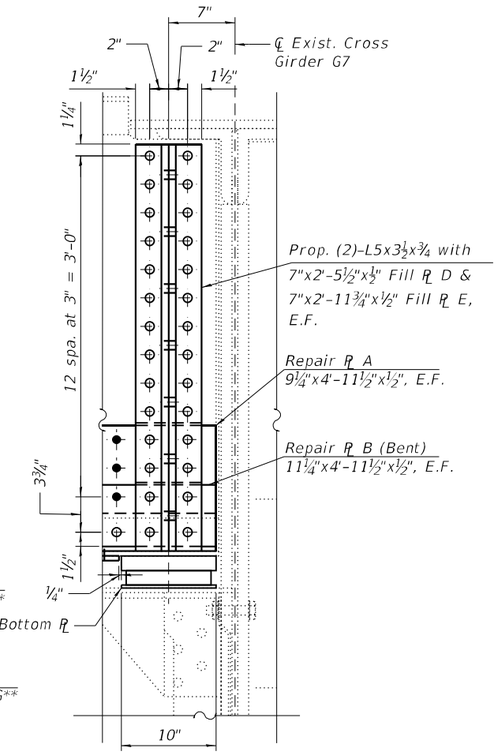

DETAIL 1

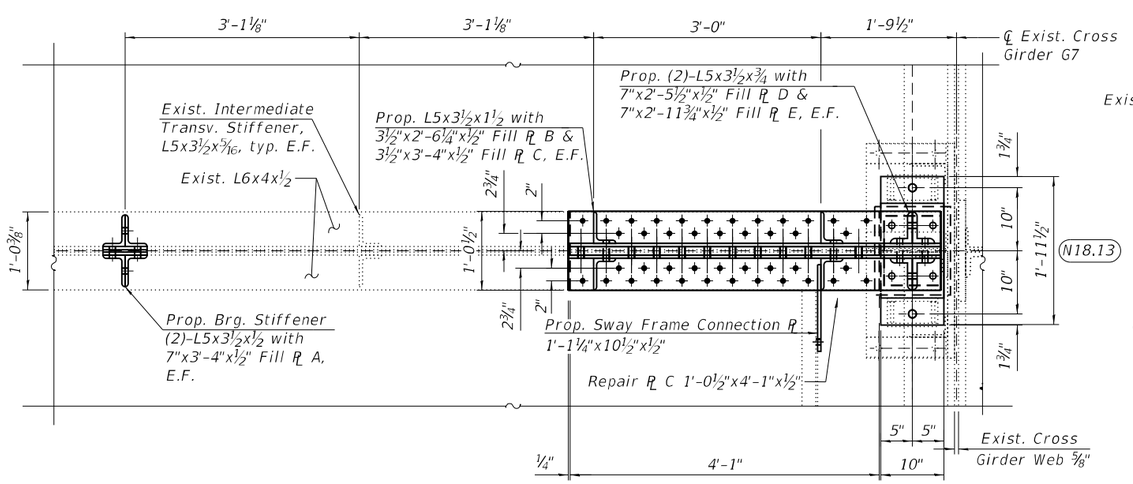

STEEL REPAIR N18.13 - PLAN

LEGEND

- ○ Field drill holes in new steel using existing steel as a template
- • Shop drill holes in new steel. Use new steel as template to field drill holes in existing steel.

SUGGESTED CONSTRUCTION SEQUENCE FOR STRINGER REPAIR:

1. Remove existing intermediate transverse stiffeners at the proposed jacking/temp. shoring location indicated in the "Steel Repair N18.13 - Elevation" and clean/paint newly exposed faces of stringer web according to the Special Provision for "Cleaning and Painting Contact Surface Areas of Existing Steel Structures".
2. Install proposed Fill Plate A and bearing stiffeners at the prop. jacking/temp. shoring location indicated in the "Steel Repair N18.13 - Elevation" and erect prop. Temporary Shoring tower. See Special Provision for "Temporary Shoring."
3. Jack stringer to relieve pressure at existing bearing. The jack capacities for lifting should be based on maximum expected load present during the lift derived from the reactions shown in the Beam Reaction Table included with the plans. The jack capacity provided should be between 50% and 100% greater than the maximum expected load.
4. Remove existing intermediate transverse stiffeners, stringer bearing stiffeners and elastomeric bearing within the limits of repair area. Clean/paint newly exposed faces of stringer according to the Special Provision for "Cleaning and Painting Contact Surface Areas of Existing Steel Structures".
5. Construct templates for location of existing rivets, bolts and fabrication of fill and repair plates.
6. Install proposed Fill Plates, Repair Plates, Intermediate Transverse Stiffeners, Elastomeric Bearing and Bearing Stiffeners at end of Stringer N18.13 as indicated in the Plans.
7. Remove Temporary Shoring Tower.

NOTE:

1. For Sections B-B, C-C, D-D and E-E, and Fill/Repair/Sway Connection Plate details, see Sheets S03A-096 and S03A-097.

BILL OF MATERIAL

ITEM	UNIT	QUANTITY
Structural Steel Repair	Pound	2,770

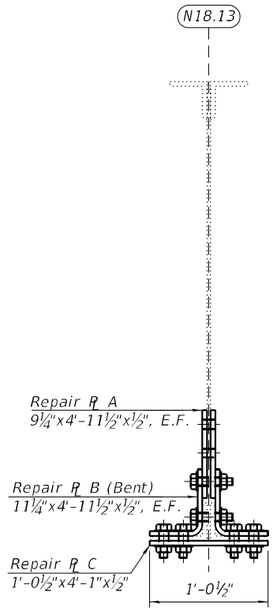

SECTION B-B

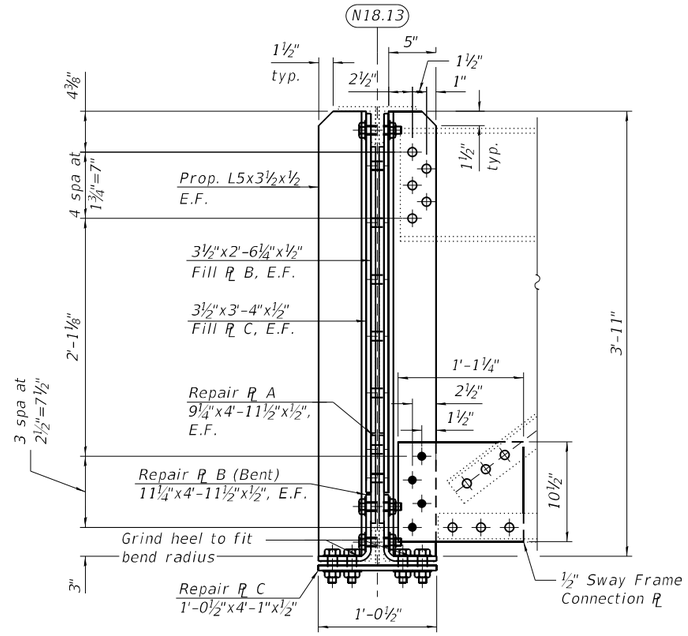

SECTION C-C

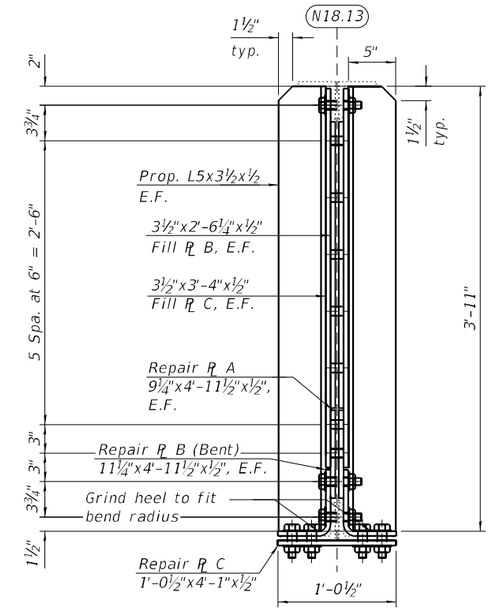

SECTION D-D

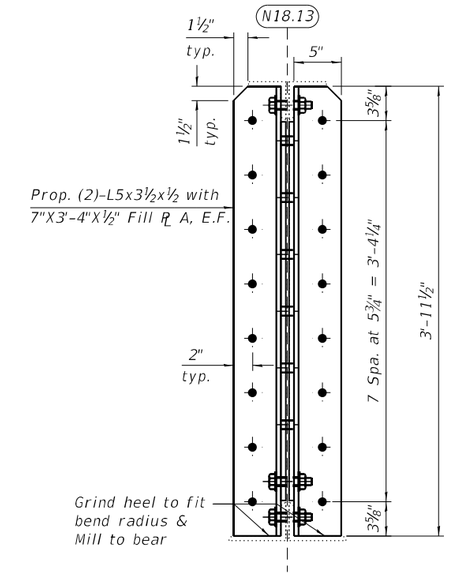

SECTION E-E

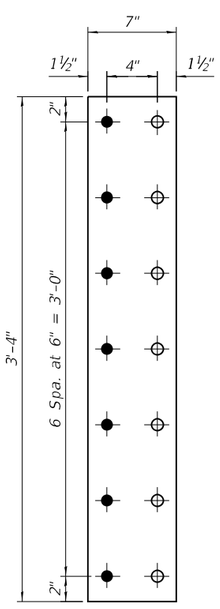

FILL PLATE A
(7"x3-4"x½" PL)

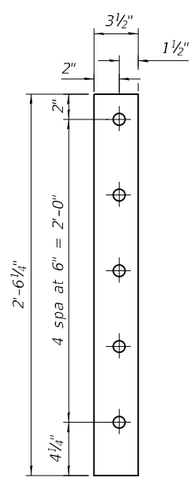

FILL PLATE B
(3½"x2'-6¼"x½" PL)

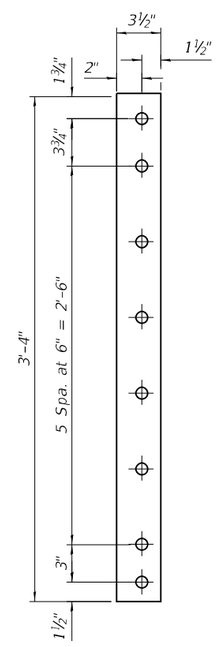

FILL PLATE C
(3½"x3-4"x½" PL)

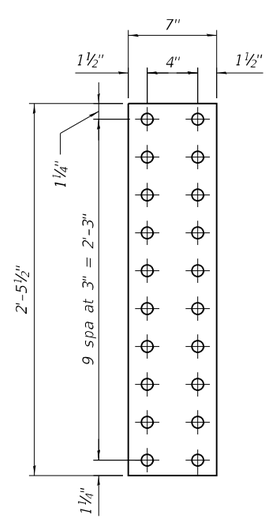

FILL PLATE D
(7"x2'-5½"x½" PL)

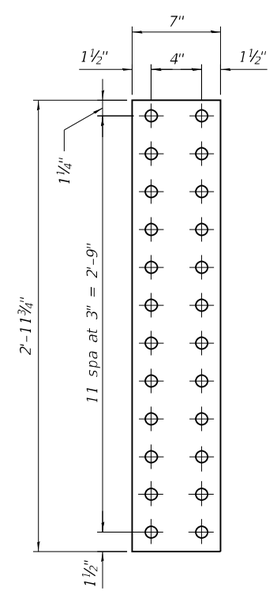

FILL PLATE E
(7"x2'-11¾"x½" PL)

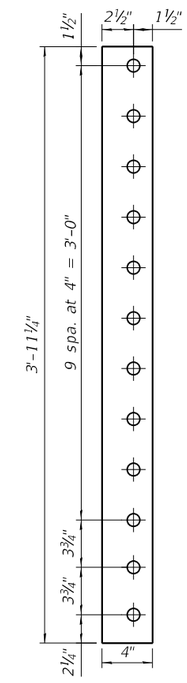

FILL PLATE F
(4"x3'-11¼"x1⅛" PL)

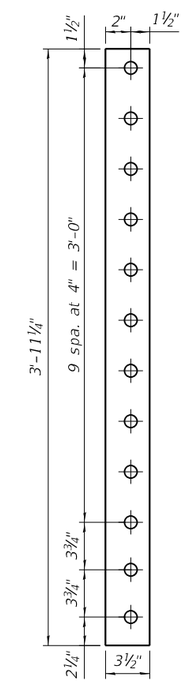

FILL PLATE G
(3½"x3'-11¼"x1⅛" PL)

NOTE:

1. For Bill of Material, see Sheet S03A-095.

HBM ENGINEERING GROUP, LLC	USER NAME =	DESIGNED - LAB	REVISED -	STATE OF ILLINOIS DEPARTMENT OF TRANSPORTATION
		CHECKED - MI	REVISED -	
	PLOT SCALE =	DRAWN - LAB	REVISED -	
	PLOT DATE =	DATE - 4/29/2024	REVISED -	

STRUCTURAL STEEL REPAIRS AT N18.13 (SHT. 2 OF 3)
STRUCTURE NO. 016-0133 (NB)

SHEET S03A-096 OF S03A-148 SHEETS

F.A.I. RTE.	SECTION	COUNTY	TOTAL SHEETS	SHEET NO.
90/94	2020-005-BR	COOK	908	424
		CONTRACT NO. 62K73		
		ILLINOIS	FED. AID PROJECT	

MODEL: Default
FILE NAME: P:\2004-825 PTB195-014 HBM\WO#7 I-90 Various Overlays\Ashland Ave\Sheet Files\0160133-62K73-S06A-Structural Steel Repairs 18.13-2.dgn
4/30/2024 3:21:58 PM

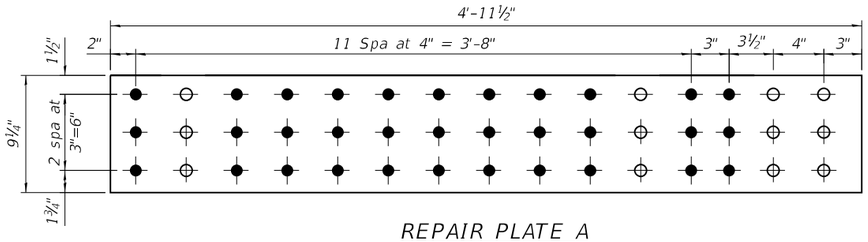

REPAIR PLATE A

(9¼"x4'-11½"x½" PL)

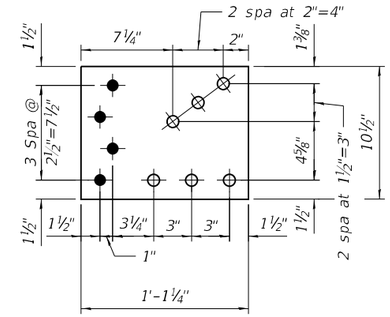

SWAY FRAME CONNECTION PLATE

(1'-1¼"x10½"x½" PL)

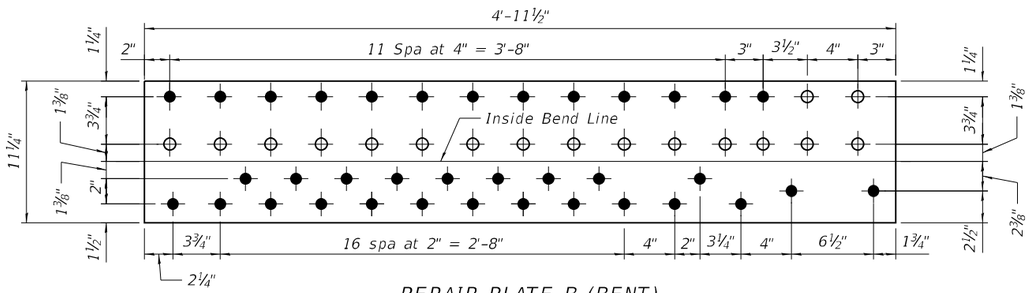

REPAIR PLATE B (BENT)

(11¼"x4'-11½"x½" PL)

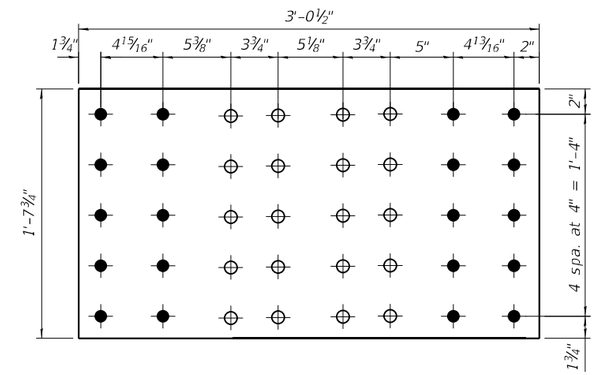

REPAIR PLATE D

(1'-7¾"x3'-0½"x½" PL)

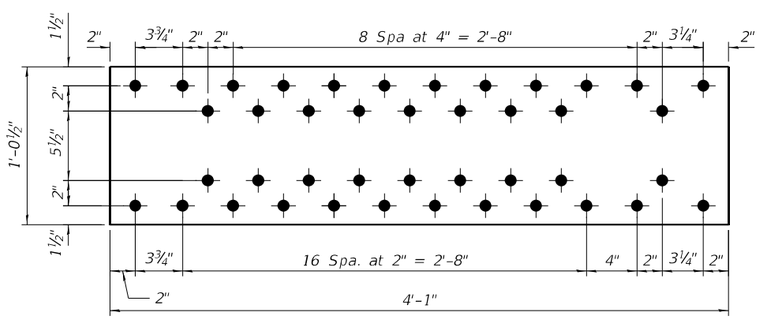

REPAIR PLATE C

(1'-0½"x4'-1"x½" PL)

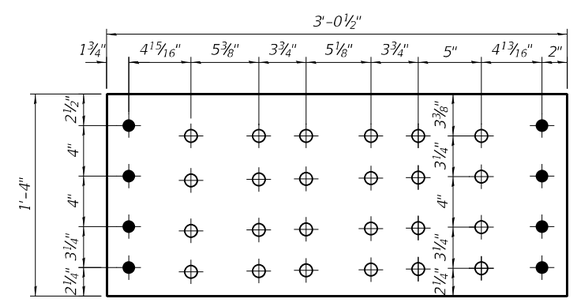

REPAIR PLATE E

(1'-4"x3'-0½"x1⅛" PL)

NOTE:

1. For Bill of Material, see Sheet S03A-095.

MODEL: Default
FILE NAME: P:\2004-825 PTB:195-014 HBM\WO#7 I-90 Various Overlays\Ashland Ave\Sheet Files\016133-62K73-S86B-Structural Steel Repairs 18.13-3.dgn
4/30/2024 3:22:00 PM

HBM ENGINEERING GROUP, LLC

USER NAME =	DESIGNED - LAB	REVISED -	
	CHECKED - MI	REVISED -	
PLOT SCALE =	DRAWN - LAB	REVISED -	
PLOT DATE =	DATE - 4/29/2024	REVISED -	

STATE OF ILLINOIS
DEPARTMENT OF TRANSPORTATION

STRUCTURAL STEEL REPAIRS AT N18.13 (SHT. 3 OF 3)
STRUCTURE NO. 016-0133 (NB)

SHEET S03A-097 OF S03A-148 SHEETS

F.A.I. RTE.	SECTION	COUNTY	TOTAL SHEETS	SHEET NO.
90/94	2020-005-BR	COOK	908	425
		CONTRACT NO. 62K73		
		ILLINOIS	FED. AID PROJECT	

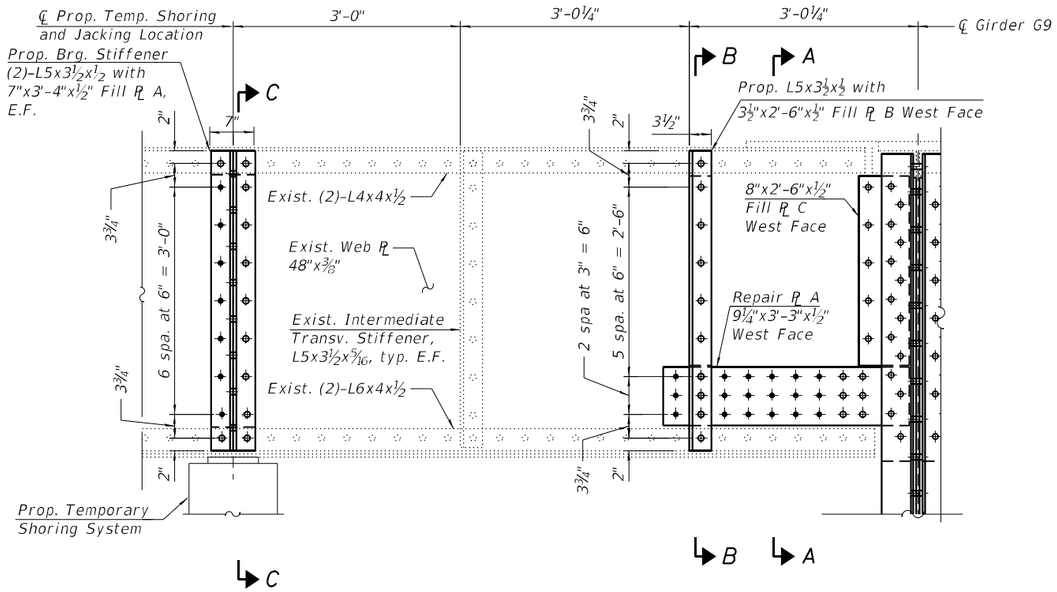

STEEL REPAIR N20.4 - ELEVATION

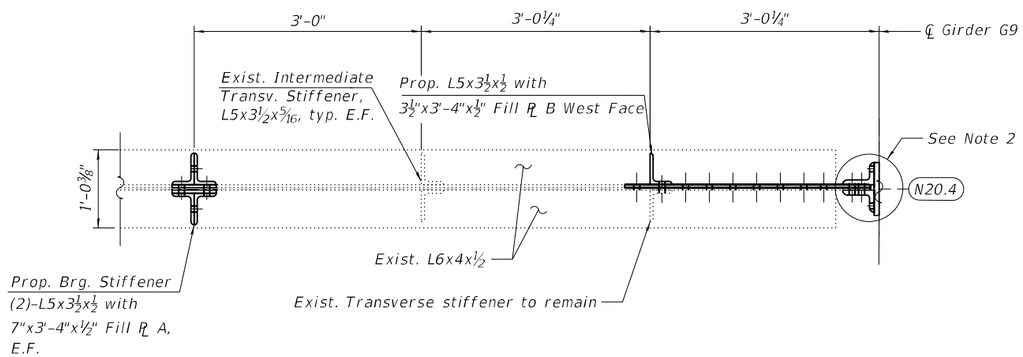

STEEL REPAIR N20.4 - PLAN

(Girder G9 not shown for clarity)

N

SUGGESTED CONSTRUCTION SEQUENCE FOR STRINGER REPAIR:

1. Remove existing intermediate transverse stiffeners at the proposed jacking/temp. shoring location indicated in the "Steel Repair N20.4 - Elevation" and clean/paint newly exposed faces of stringer web according to the Special Provision for "Cleaning and Painting Contact Surface Areas of Existing Steel Structures".
2. Install proposed Fill Plate A and bearing stiffeners at the prop. jacking/temp. shoring location indicated in the "Steel Repair N20.4 - Elevation" and erect prop. Temporary Shoring tower. See Special Provision for "Temporary Shoring."
3. Jack stringer to relieve pressure at existing bearing. The jack capacities for lifting should be based on maximum expected load present during the lift derived from the reactions shown in the Beam Reaction Table included with the plans. The jack capacity provided should be between 50% and 100% greater than the maximum expected load.
4. Remove existing intermediate transverse stiffener and girder connection angles within the limits of repair area. Clean/paint newly exposed faces of stringer according to the Special Provision for "Cleaning and Painting Contact Surface Areas of Existing Steel Structures".
5. Construct templates for location of existing rivet, bolts and fabrication of fill and repair plates.
6. Install proposed Fill Plates, Repair Plate and Intermediate Transverse Stiffener at end of Stringer N20.4 as indicated in the Plans.
7. Remove Temporary Shoring Tower.

BILL OF MATERIAL

ITEM	UNIT	QUANTITY
Structural Steel Repair	Pound	530

LEGEND

- ○ Field drill holes in new steel using existing steel as a template
- • Shop drill holes in new steel. Use new steel as template to field drill holes in existing steel.

NOTES:

1. For Sections A-A, B-B and C-C, and Fill and Repair Plate details, see Sheet S03A-099.
2. For Girder G9 repairs, see Sheets S03A-112and S03A-113.

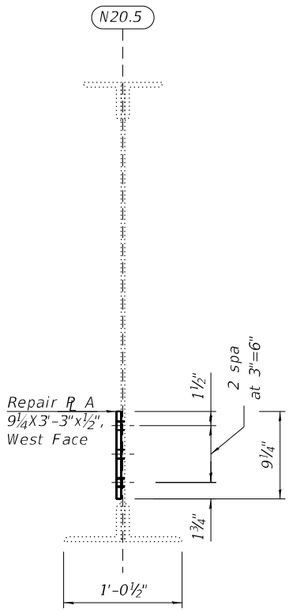

SECTION A-A

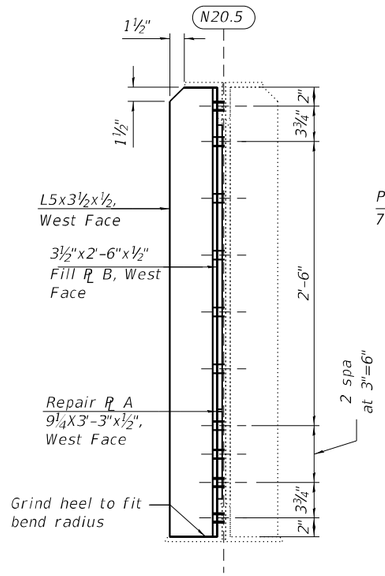

SECTION B-B

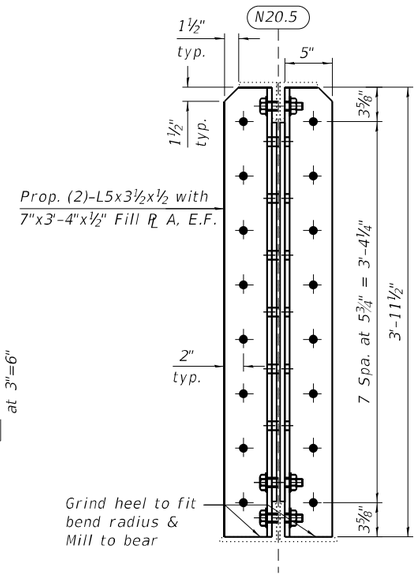

SECTION C-C

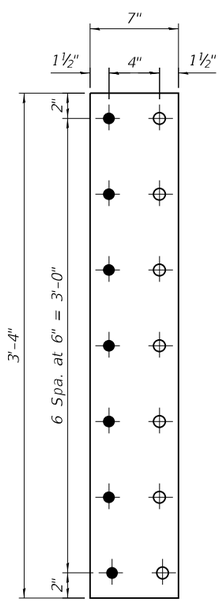

FILL PLATE A

(7"x3'-4"x½" PL)

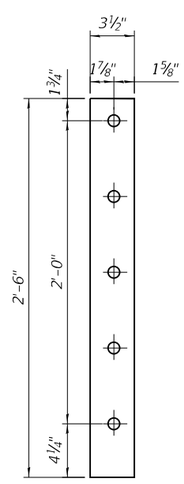

FILL PLATE B

(3½"x2'-6"x½" PL)

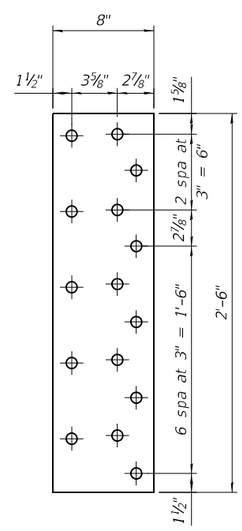

FILL PLATE C

(8"x2'-6"x½" PL)

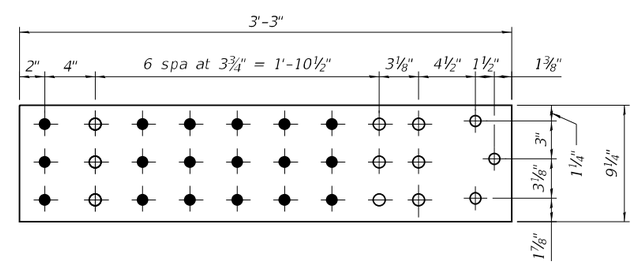

REPAIR PLATE A

(9¼"x3-3"x½" PL)

NOTE:

1. For Bill of Material, see Sheet S03A-098.

MODEL: Default
FILE NAME: P:\2004-825 PTB195-014 HBM\WO#7 I-90 Various Overlays\Ashland Ave\Sheet Files\0160133-62K73-S86D-Structural Steel Repairs 20.4-2.dgn
4/30/2024 3:22:06 PM

HBM ENGINEERING GROUP, LLC

USER NAME =	DESIGNED - LAB	REVISED -	
	CHECKED - MI	REVISED -	
PLOT SCALE =	DRAWN - LAB	REVISED -	
PLOT DATE =	DATE - 4/29/2024	REVISED -	

STATE OF ILLINOIS
DEPARTMENT OF TRANSPORTATION

STRUCTURAL STEEL REPAIRS AT N20.4 (SHT. 2 OF 2)
STRUCTURE NO. 016-0133 (NB)

SHEET S03A-099 OF S03A-148 SHEETS

F.A.I. RTE.	SECTION	COUNTY	TOTAL SHEETS	SHEET NO.
90/94	2020-005-BR	COOK	908	427
		CONTRACT NO. 62K73		
	ILLINOIS	FED. AID PROJECT		

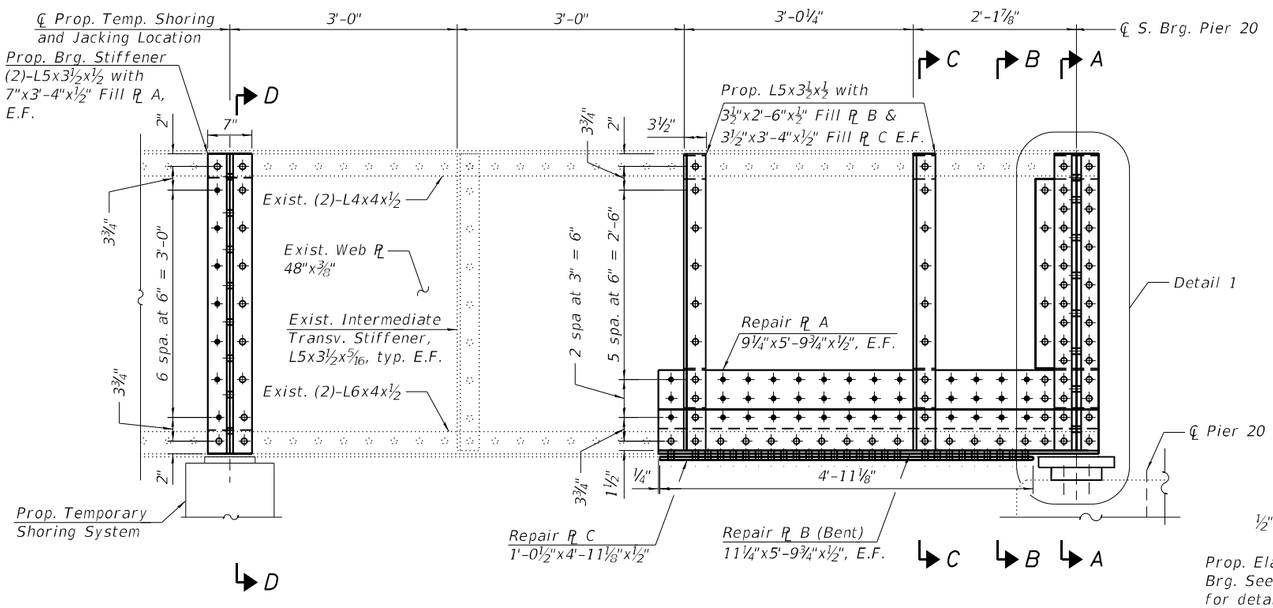

STEEL REPAIR N20.5 NORTH END - ELEVATION

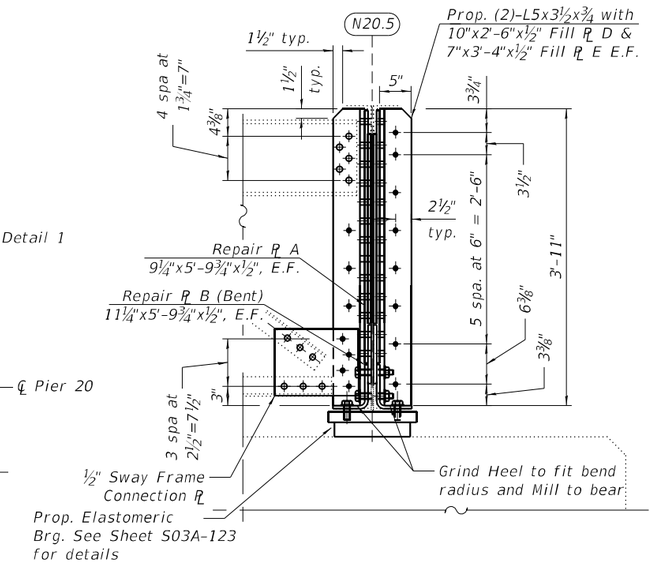

SECTION A-A

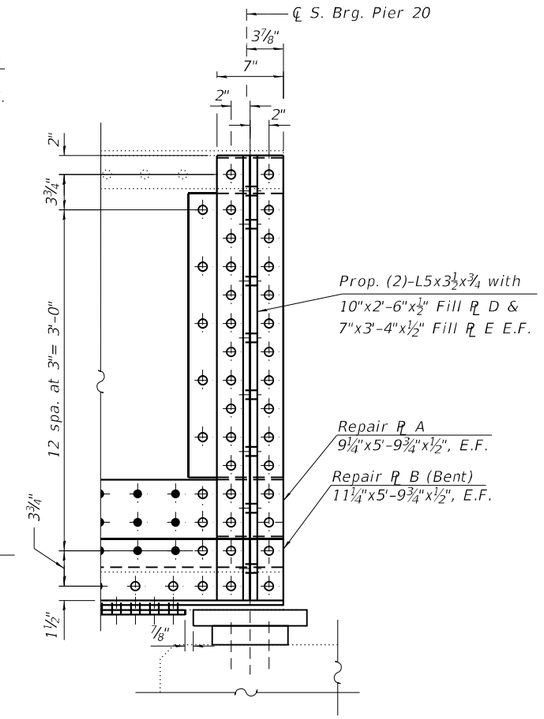

DETAIL 1

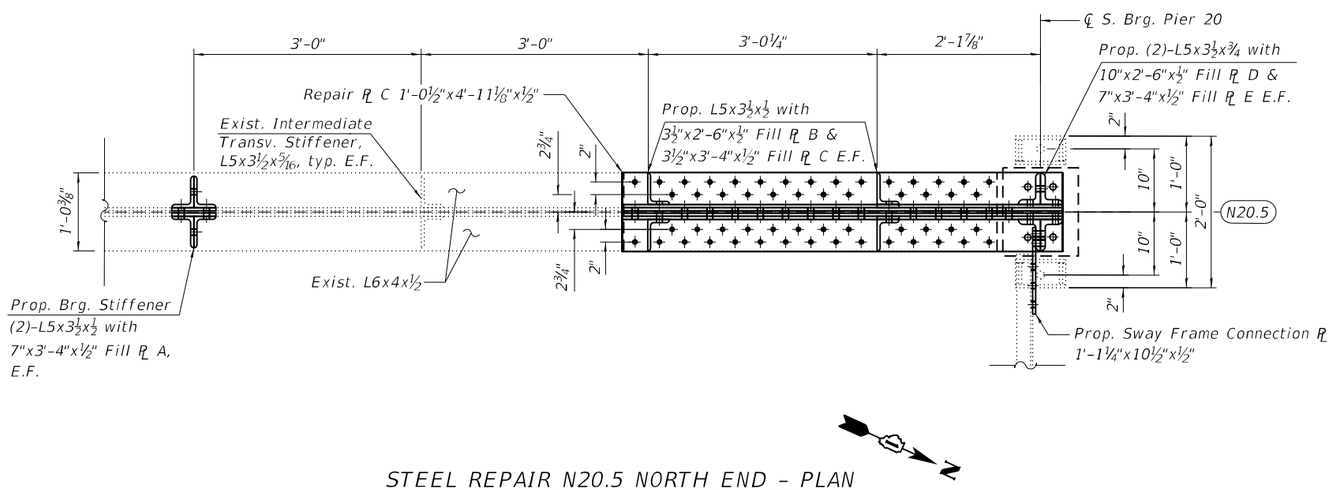

STEEL REPAIR N20.5 NORTH END - PLAN

SUGGESTED CONSTRUCTION SEQUENCE FOR STRINGER REPAIR:

1. Remove existing intermediate transverse stiffeners at the proposed jacking/temp. shoring location indicated in the "Steel Repair N20.5 - Elevation" and clean/paint newly exposed faces of stringer web according to the Special Provision for "Cleaning and Painting Contact Surface Areas of Existing Steel Structures".
2. Install proposed Fill Plate A and bearing stiffeners at the prop. jacking/temp. shoring location indicated in the "Steel Repair N20.5 - Elevation" and erect prop. Temporary Shoring tower. See Special Provision for "Temporary Shoring."
3. Jack stringer to relieve pressure at existing bearing. The jack capacities for lifting should be based on maximum expected load present during the lift derived from the reactions shown in the Beam Reaction Table included with the plans. The jack capacity provided should be between 50% and 100% greater than the maximum expected load.
4. Remove existing intermediate transverse stiffeners, stringer bearing stiffeners and elastomeric bearing within the limits of repair area. Clean/paint newly exposed faces of stringer according to the Special Provision for "Cleaning and Painting Contact Surface Areas of Existing Steel Structures".
5. Construct templates for location of existing rivets, bolts and fabrication of fill and repair plates.
6. Install proposed Fill Plates, Repair Plates, Intermediate Transverse Stiffeners, Elastomeric Bearing and Bearing Stiffeners at end of Stringer N20.5 as indicated in the Plans.
7. Remove Temporary Shoring Tower.

LEGEND

- ∘ Field drill holes in new steel using existing steel as a template
- • Shop drill holes in new steel. Use new steel as template to field drill holes in existing steel.

BILL OF MATERIAL

NORTH END

ITEM	UNIT	QUANTITY
Structural Steel Repair	Pound	1,900

NOTE:

1. For Sections B-B, C-C and D-D, and Fill/Repair/Sway Frame Connection Plate details, see Sheet S03A-101.

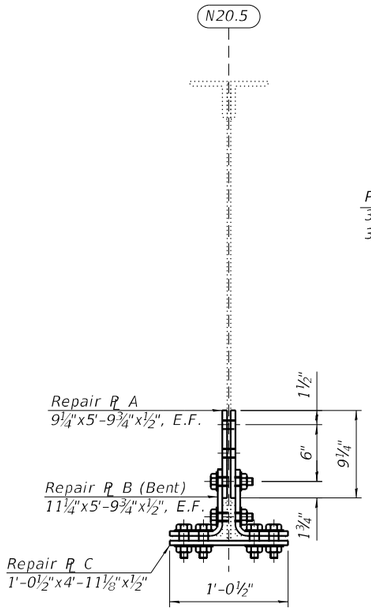

SECTION B-B

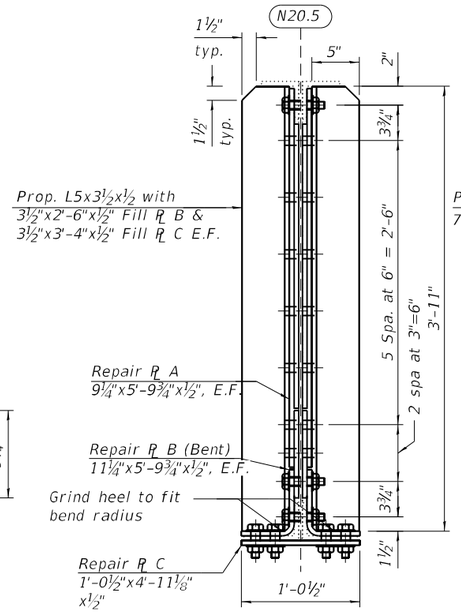

SECTION C-C

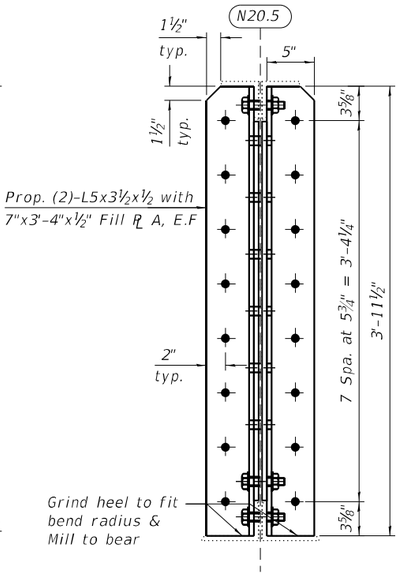

SECTION D-D

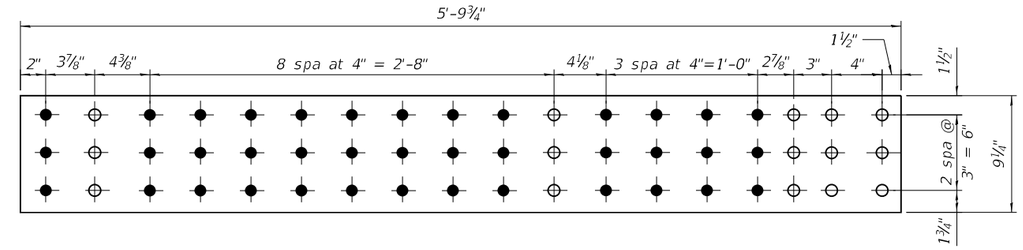

REPAIR PLATE A

(9¼"x5'-9¾"x½" PL)

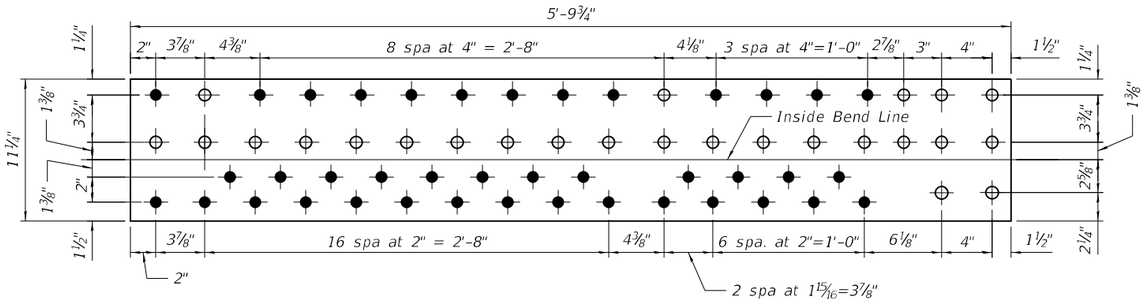

REPAIR PLATE B (BENT)

(11¼"x5'-9¾"x½" PL)

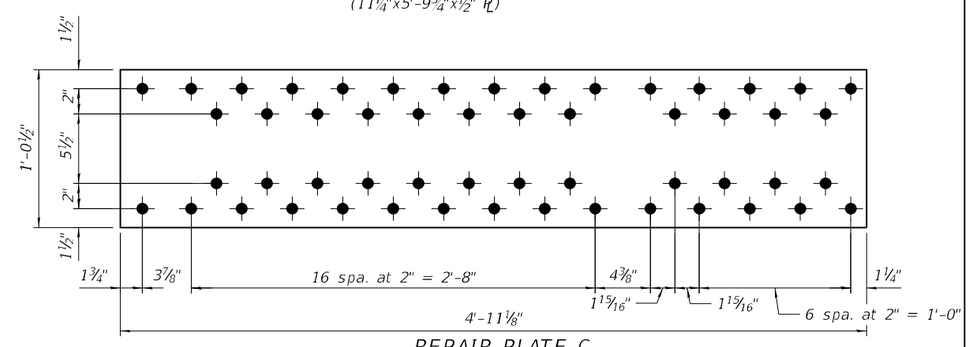

REPAIR PLATE C

(1'-0½"x4'-11⅛"x½" PL)

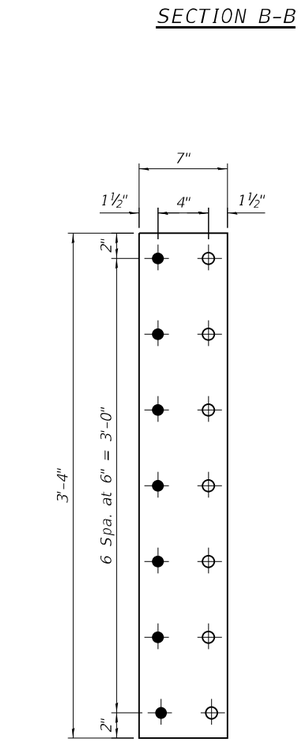

FILL PLATE A

(7"x3-4"x½" PL)

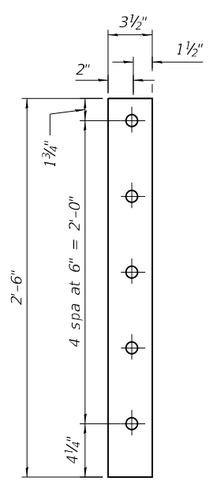

FILL PLATE B

(3½"x2'-6"x½" PL)

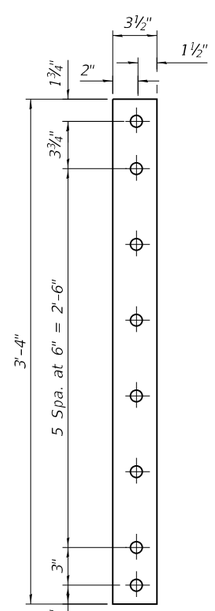

FILL PLATE C

(3½"x3'-4"x½" PL)

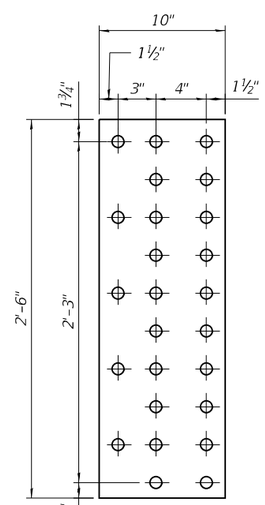

FILL PLATE D

(10"x2'-6"x½" PL)

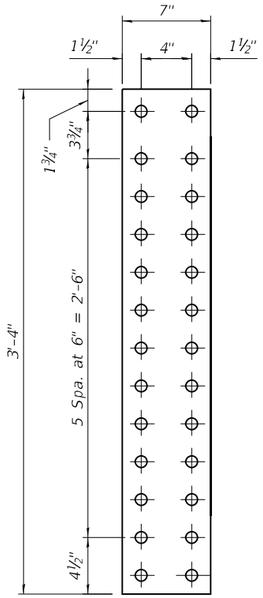

FILL PLATE E

(7"x3'-4"x½" PL)

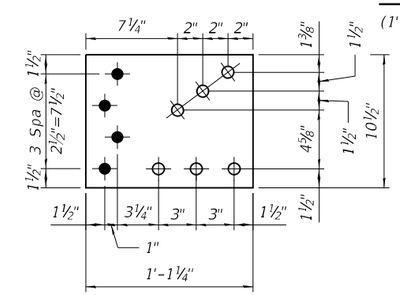

SWAY FRAME CONNECTION PLATE

(1'-1¼"x10½"x½" PL)

NOTE:

1. For Bill of Material, see Sheet S03A-100.

USER NAME =	DESIGNED - LAB	REVISED -	
	CHECKED - MI	REVISED -	
PLOT SCALE =	DRAWN - LAB	REVISED -	
PLOT DATE =	DATE - 4/29/2024	REVISED -	

HBM ENGINEERING GROUP, LLC

STATE OF ILLINOIS
DEPARTMENT OF TRANSPORTATION

STRUCTURAL STEEL REPAIRS AT N20.5 NORTH END (SHT. 2 OF 2)
STRUCTURE NO. 016-0133 (NB)

SHEET S03A-101 OF S03A-148 SHEETS

F.A.I. RTE.	SECTION	COUNTY	TOTAL SHEETS	SHEET NO.
90/94	2020-005-BR	COOK	908	429
		CONTRACT NO. 62K73		
		ILLINOIS	FED. AID PROJECT	

MODEL: Default
FILE NAME: P:\2004-825 PTB195-014 HBM\WO#7 I-90 Various Overlays\Ashland Ave\Sheet Files\0160133-62K73-S87A-Structural Steel Repairs 20.5-2.dgn
4/30/2024 3:22:14 PM

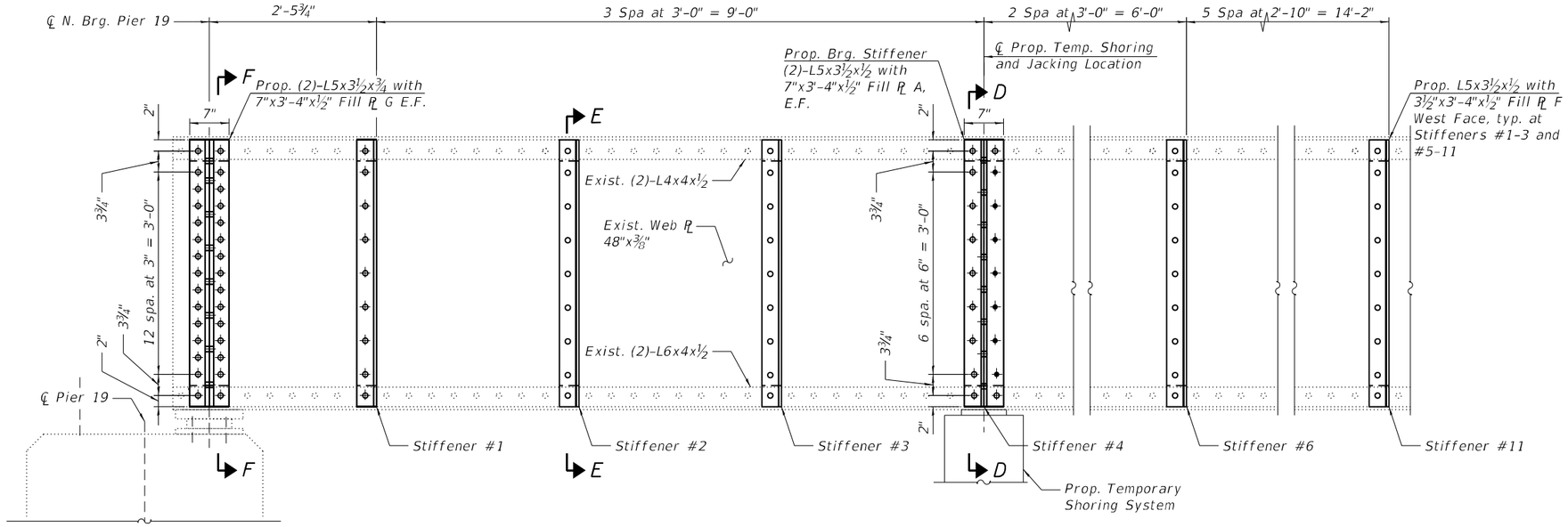

STEEL REPAIR N20.5 SOUTH END - ELEVATION

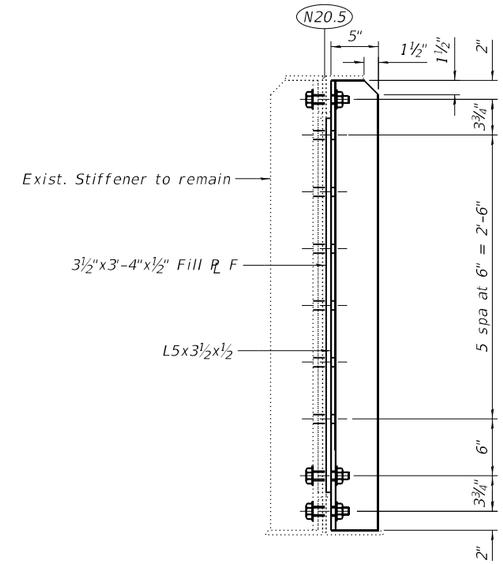

SECTION E-E

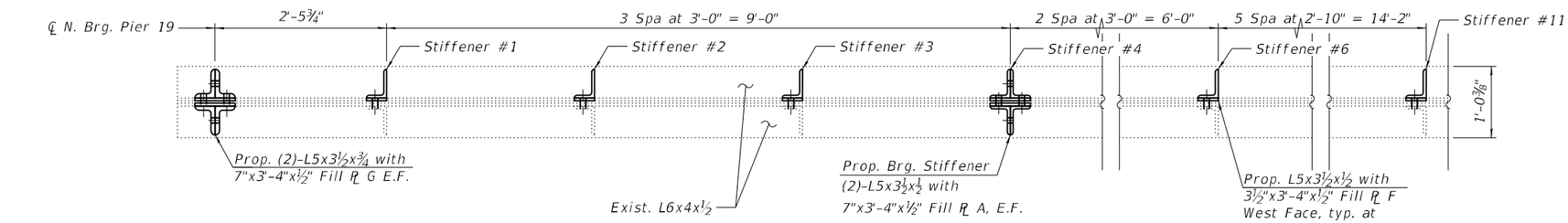

STEEL REPAIR N20.5 SOUTH END - PLAN

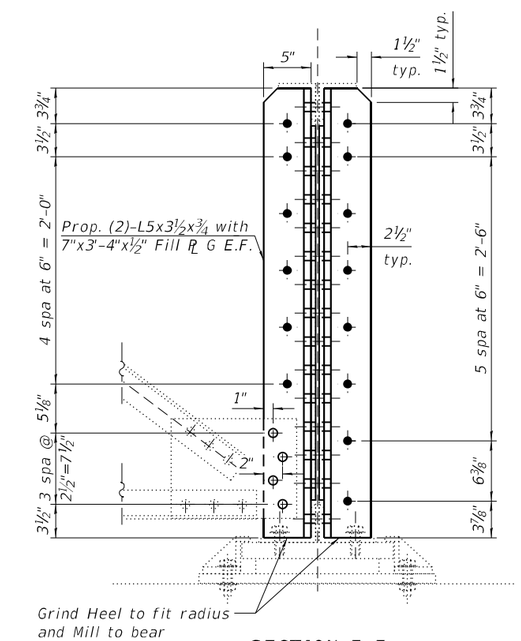

SECTION F-F

SUGGESTED CONSTRUCTION SEQUENCE FOR STRINGER REPAIR:

1. Remove existing intermediate transverse stiffeners at the proposed jacking/temp. shoring location indicated in the "Steel Repair N20.5 - Elevation" and clean/paint newly exposed faces of stringer web according to the Special Provision for "Cleaning and Painting Contact Surface Areas of Existing Steel Structures".
2. Install proposed Fill Plate A and bearing stiffeners at the prop. jacking/temp. shoring location indicated in the "Steel Repair N20.5 - Elevation" and erect prop. Temporary Shoring tower. See Special Provision for "Temporary Shoring."
3. Jack stringer to relieve pressure at existing bearing. The jack capacities for lifting should be based on maximum expected load present during the lift derived from the reactions shown in the Beam Reaction Table included with the plans. The jack capacity provided should be between 50% and 100% greater than the maximum expected load.
4. Remove existing intermediate transverse stiffeners #1 thru #3 & #5 thru #11 at west face and stringer bearing stiffeners within the limits of repair area. Clean/paint newly exposed faces of stringer according to the Special Provision for "Cleaning and Painting Contact Surface Areas of Existing Steel Structures".
5. Construct templates for location at existing rivets, bolts and fabrication of fill and repair plates.
6. Install proposed Fill Plates, Intermediate Transverse Stiffeners #1 thru #3 & #5 thru #11 at west face and Bearing Stiffeners at end of Stringer N20.5 as indicated in the Plans.
7. Remove Temporary Shoring Tower.

BILL OF MATERIAL

SOUTH END

ITEM	UNIT	QUANTITY
Structural Steel Repair	Pound	1,610

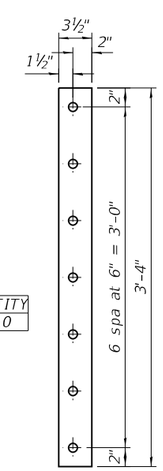

FILL PLATE F

(3½"x3'-4"x½" PL)

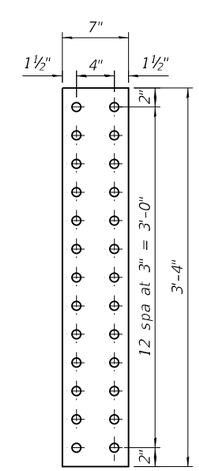

FILL PLATE G

(7"x3'-4"x½" PL)

NOTE:

1. For additional repairs at north end of Stringer 20.5, Section D-D, Fill Plates A, and Bill of Material, see Sheets S03A-100 and S03A-101.

MODEL: Default
FILE NAME: P:\2004-825 PTB195-014 HBM\WO#7 I-90 Various Overlays\Ashland Ave\Sheet Files\0160133-62K73-S87B-Structural Steel Repairs 20.5-3.dgn
5/1/2024 1:37:31 PM

HBM ENGINEERING GROUP, LLC

USER NAME =	DESIGNED - LAB	REVISED -
	CHECKED - MI	REVISED -
PLOT SCALE =	DRAWN - LAB	REVISED -
PLOT DATE =	DATE - 4/29/2024	REVISED -

STATE OF ILLINOIS
DEPARTMENT OF TRANSPORTATION

STRUCTURAL STEEL REPAIRS AT N20.5 SOUTH END
STRUCTURE NO. 016-0133 (NB)

SHEET S03A-102 OF S03A-148 SHEETS

F.A.I. RTE.	SECTION	COUNTY	TOTAL SHEETS	SHEET NO.
90/94	2020-005-BR	COOK	908	430

CONTRACT NO. 62K73

ILLINOIS FED. AID PROJECT

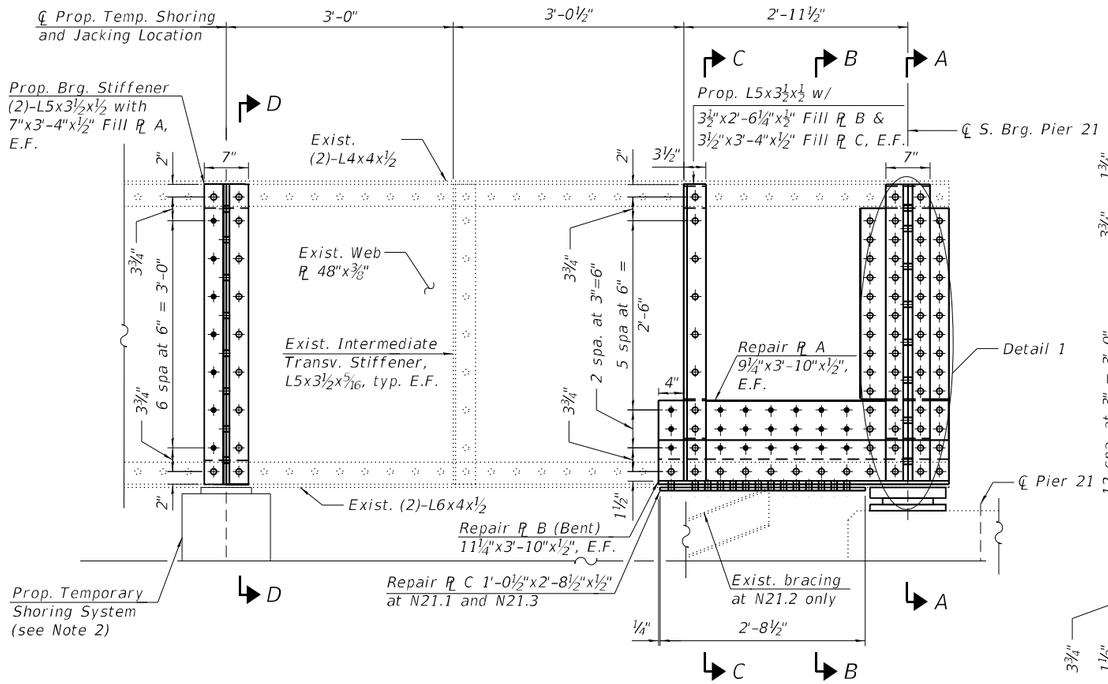

STEEL REPAIR N21.1 THRU N21.3 – ELEVATION

(Looking West)

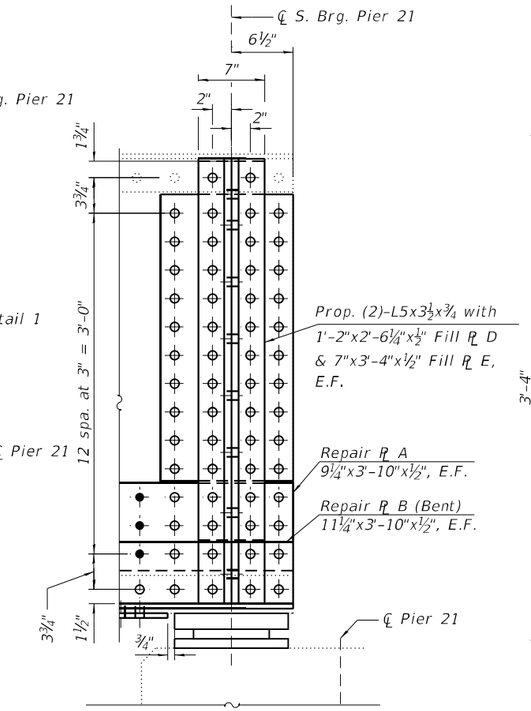

DETAIL 1

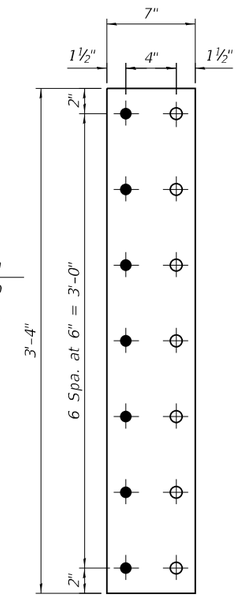

FILL PLATE A

(7"x3-4"x½" PL)

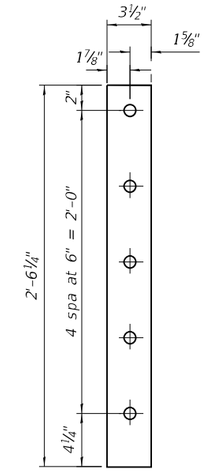

FILL PLATE B

(3½"x2'-6¼"x½" PL)

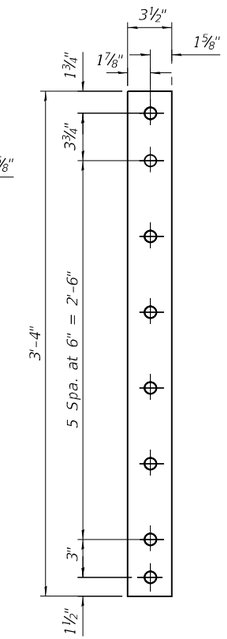

FILL PLATE C

(3½"x3-4"x½" PL)

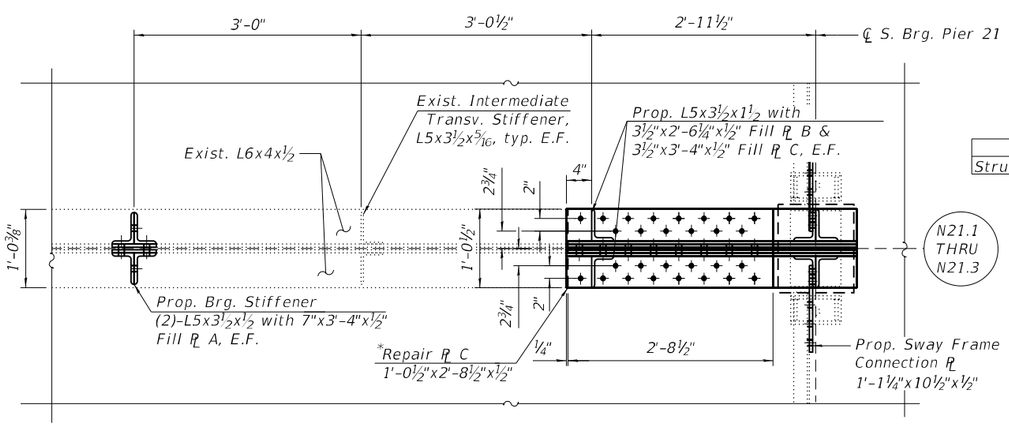

STEEL REPAIR N21.1 THRU N21.3 – PLAN

*Bottom PL C at N21.1 and N21.3

BILL OF MATERIAL

N21.1

ITEM	UNIT	QUANTITY
Structural Steel Repair	Pound	1,500

BILL OF MATERIAL

N21.2

ITEM	UNIT	QUANTITY
Structural Steel Repair	Pound	1,430

BILL OF MATERIAL

N21.3

ITEM	UNIT	QUANTITY
Structural Steel Repair	Pound	1,540

NOTES:

1. For Sections A-A thru D-D, Fill Plates D and E, repair plates, and sway frame connection plates, see Sheet S03A-104.
2. The location of the temporary shoring system may be revised within 3' to the north or south at Stringers N21.1 and N21.2 due to the bottom lateral bracing. The revised temporary shoring location shall be approved by the Engineer.

SUGGESTED CONSTRUCTION SEQUENCE FOR STRINGER REPAIR:

1. Remove existing intermediate transverse stiffeners at the proposed jacking/temp. shoring location indicated in the "Steel Repair N21.1 Thru N21.3 – Elevation" and clean/paint newly exposed faces of stringer web according to the Special Provision for "Cleaning and Painting Contact Surface Areas of Existing Steel Structures".
2. Install proposed Fill Plate A and bearing stiffeners at the prop. jacking/temp. shoring location indicated in the "Steel Repair N21.1 Thru N21.3 – Elevation" and erect prop. Temporary Shoring tower. See Special Provision for "Temporary Shoring."
3. Jack stringer to relieve pressure at existing bearing. The jack capacities for lifting should be based on maximum expected load present during the lift derived from the reactions shown in the Beam Reaction Table included with the plans. The jack capacity provided should be between 50% and 100% greater than the maximum expected load.
4. Remove existing intermediate transverse stiffeners, stringer bearing stiffeners and elastomeric bearing within the limits of repair area. Clean/paint newly exposed faces of stringer according to the Special Provision for "Cleaning and Painting Contact Surface Areas of Existing Steel Structures".
5. Construct templates for location of existing rivets, bolts and fabrication of fill and repair plates.
6. Install proposed Fill Plates, Repair Plates, Intermediate Transverse Stiffeners, Elastomeric Bearing and Bearing Stiffeners at end of Stringers N21.1 thru N21.3 as indicated in the Plans. The bottom flange Repair PL C shall be omitted at Stringer 21.2.
7. Remove Temporary Shoring Tower.

LEGEND

- ○ Field drill holes in new steel using existing steel as a template
- • Shop drill holes in new steel. Use new steel as template to field drill holes in existing steel.

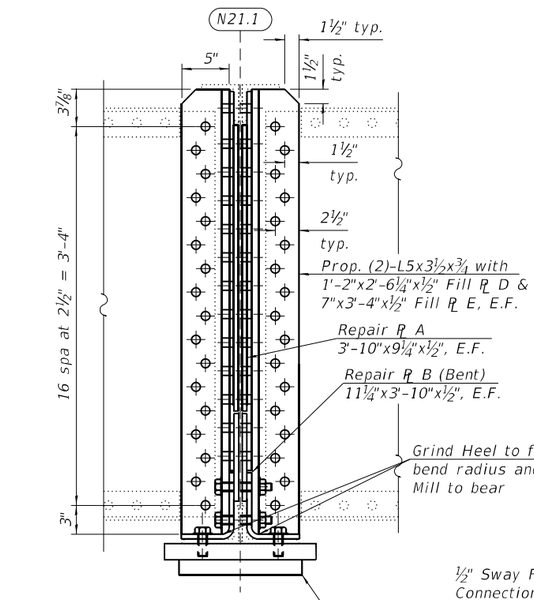

SECTION A-A
(N21.1)

Prop. Elastomeric Brg.
See Sheet S03A-123
for details

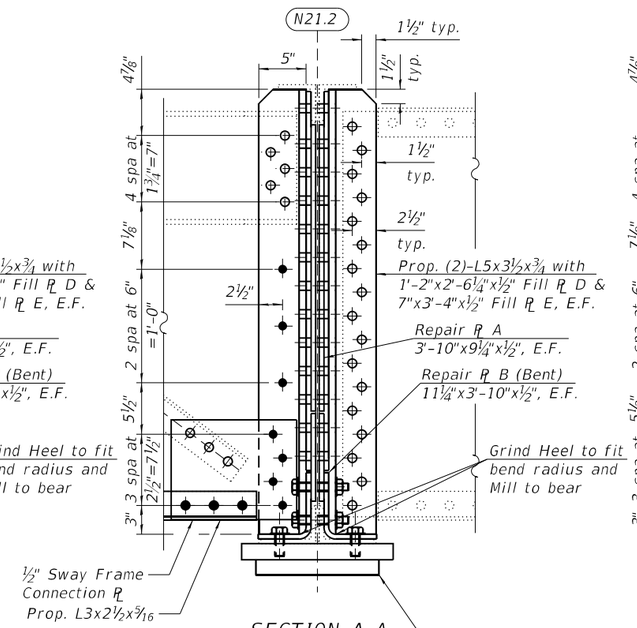

SECTION A-A
(N21.2)
For bolt spacing at east
stiffener, see N21.1 Section A-A

Prop. Elastomeric Brg.
See Sheet S03A-123
for details

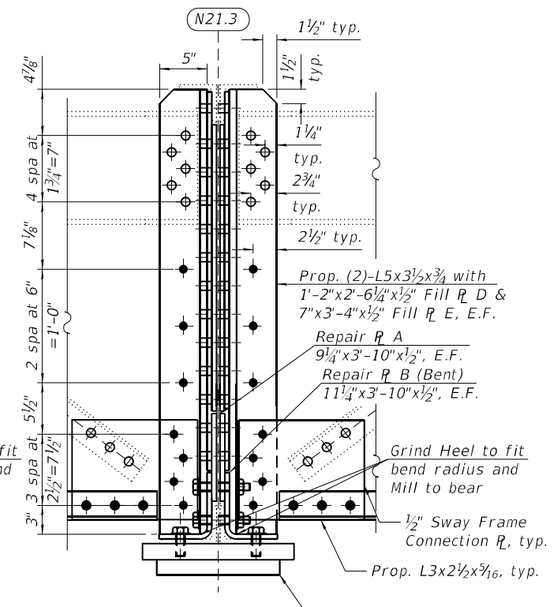

SECTION A-A
(N21.3)

Prop. Elastomeric Brg.
See Sheet S03A-123
for details

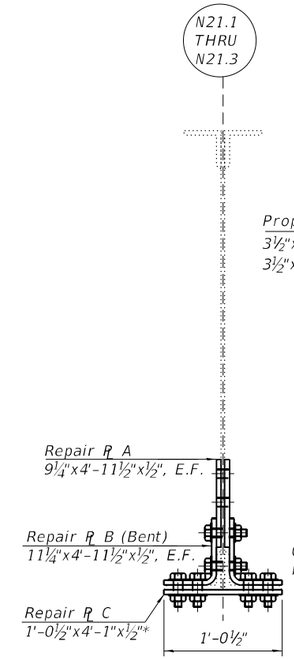

SECTION B-B

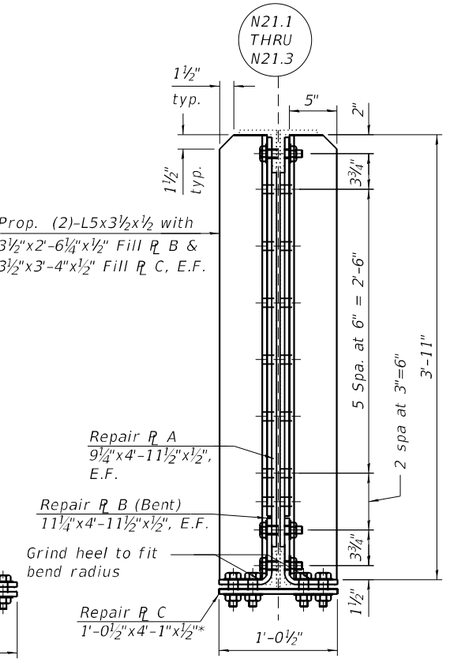

SECTION C-C

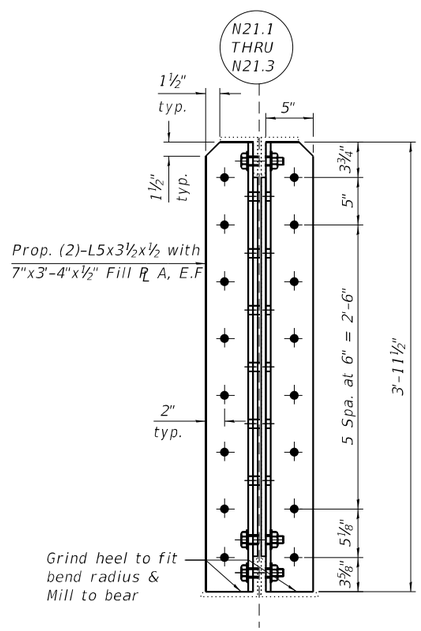

SECTION D-D

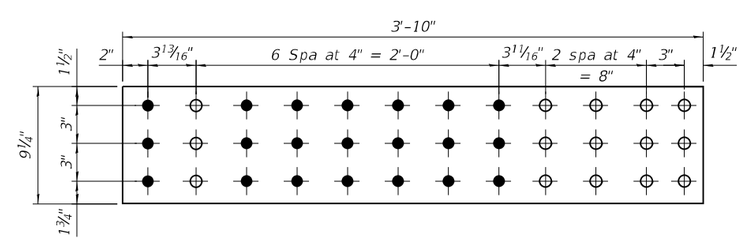

REPAIR PLATE A
(9¼"x3'-10"x½" PL)

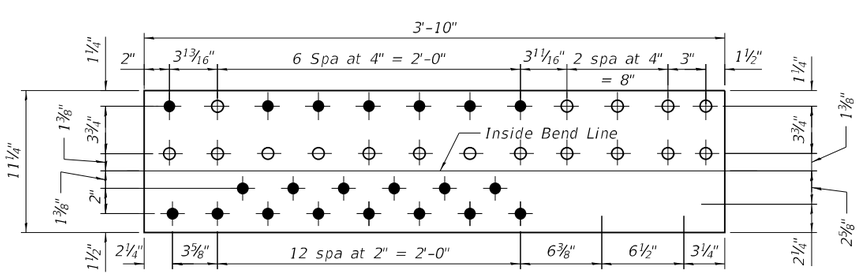

REPAIR PLATE B
(11¼"x3'-10"x½" PL)

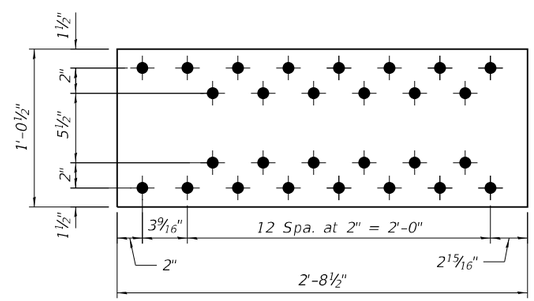

REPAIR PLATE C
(1'-0½"x2'-8½"x½" PL)

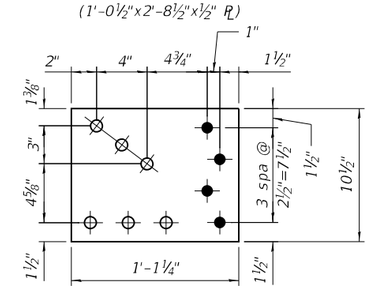

SWAY FRAME CONNECTION PL
(10½"x1'-1¼"x½" PL)

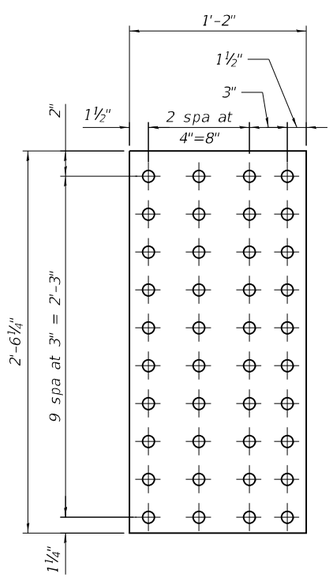

FILL PLATE D
(1'-2"x2'-6¼"x½" PL)

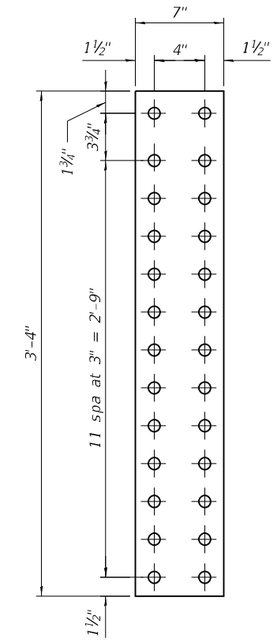

FILL PLATE E
(7"x3'-4"x½" PL)

NOTE:

1. For Bill of Material, see Sheet S03A-103.

*Bottom PL C at N21.1 and N21.3

MODEL: Default
FILE NAME: P:\2004-823 PTB195-014 HBM\WO#7 I-90 Various Overlays\Ashland Ave\Sheet Files\0160133-62K73-588-Structural Steel Repairs 21.1-2.dgn
4/30/2024 3:22:24 PM

HBM ENGINEERING GROUP, LLC

USER NAME =	DESIGNED - LAB	REVISED -	
	CHECKED - MI	REVISED -	
PLOT SCALE =	DRAWN - LAB	REVISED -	
PLOT DATE =	DATE - 4/29/2024	REVISED -	

STATE OF ILLINOIS
DEPARTMENT OF TRANSPORTATION

STRUCTURAL STEEL REPAIRS AT N21.1 THRU N21.3 (SHT. 2 OF 2)
STRUCTURE NO. 016-0133 (NB)

SHEET S03A-104 OF S03A-148 SHEETS

F.A.I. RTE.	SECTION	COUNTY	TOTAL SHEETS	SHEET NO.
90/94	2020-005-BR	COOK	908	432
		CONTRACT NO. 62K73		
		ILLINOIS	FED. AID PROJECT	

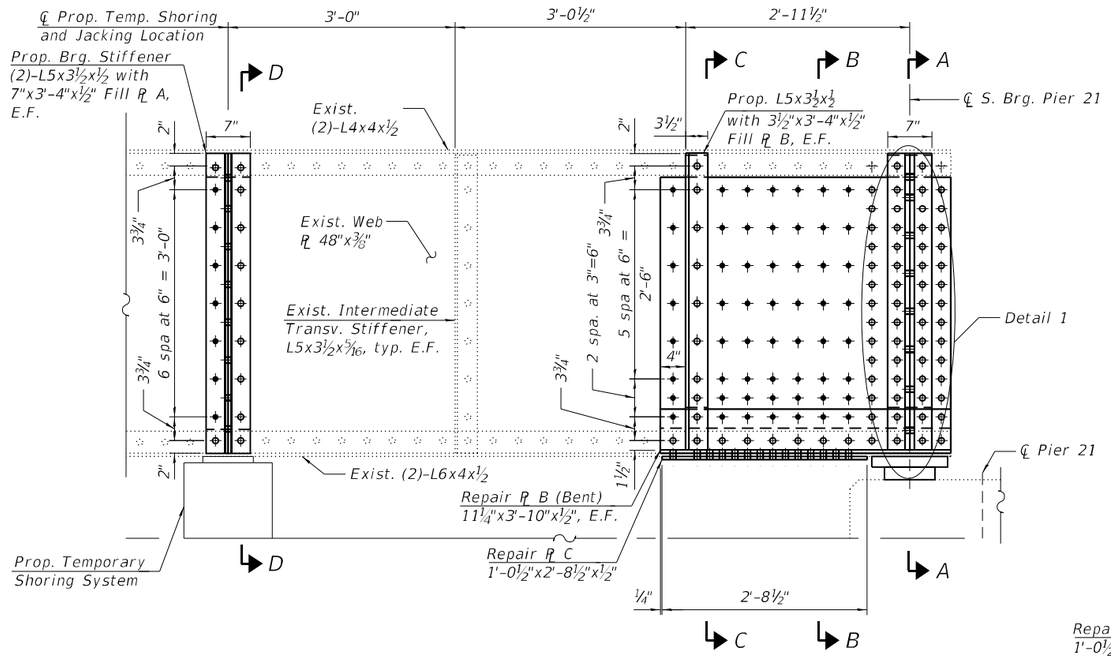

STEEL REPAIR N21.4 - ELEVATION

(Looking West)

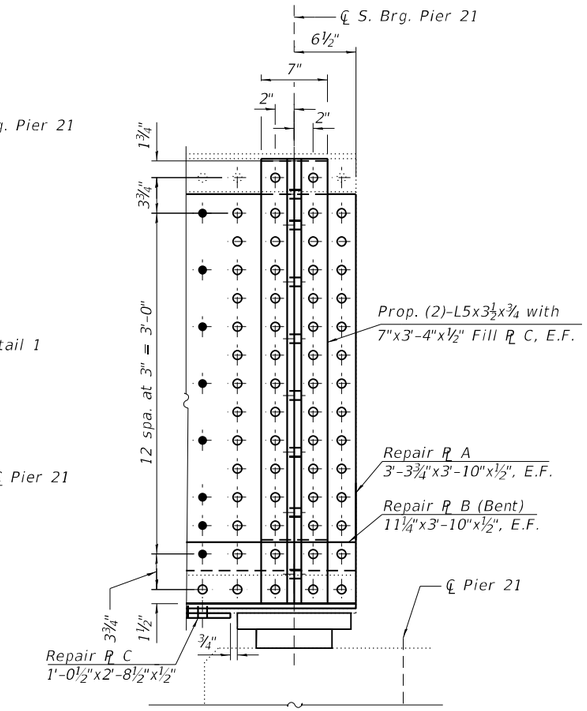

DETAIL 1

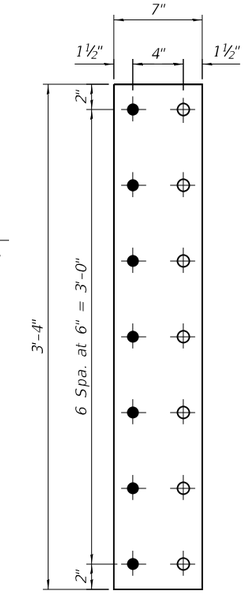

FILL PLATE A

(7"x3-4"x½" PL)

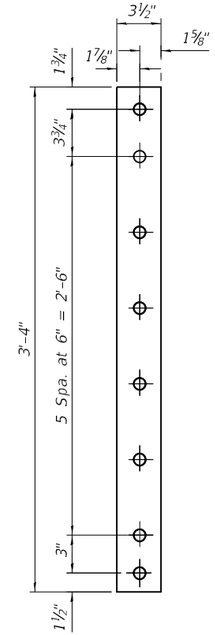

FILL PLATE B

(3½"x3-4"x½" PL)

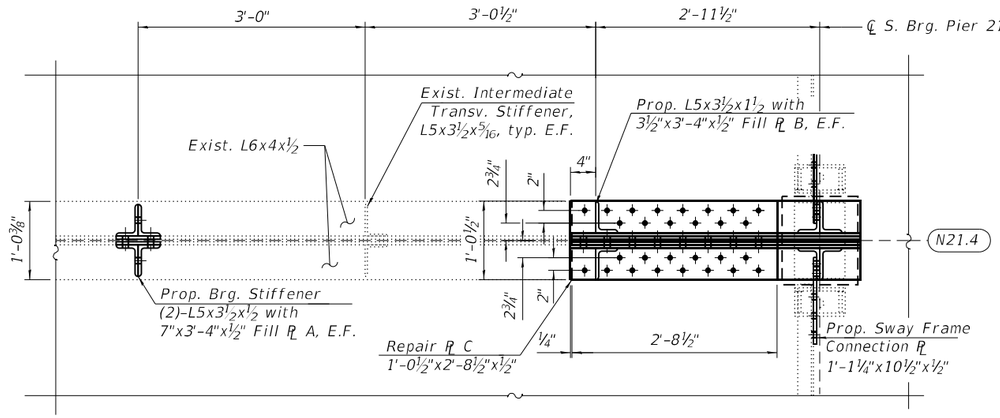

STEEL REPAIR N21.4 - PLAN

SUGGESTED CONSTRUCTION SEQUENCE FOR STRINGER REPAIR:

1. Remove existing intermediate transverse stiffeners at the proposed jacking/temp. shoring location indicated in the "Steel Repair N21.4 - Elevation" and clean/paint newly exposed faces of stringer web according to the Special Provision for "Cleaning and Painting Contact Surface Areas of Existing Steel Structures".
2. Install proposed Fill Plate A and bearing stiffeners at the prop. jacking/temp. shoring location indicated in the "Steel Repair N21.4 - Elevation" and erect prop. Temporary Shoring tower. See Special Provision for "Temporary Shoring."
3. Jack stringer to relieve pressure at existing bearing. The jack capacities for lifting should be based on maximum expected load present during the lift derived from the reactions shown in the Beam Reaction Table included with the plans. The jack capacity provided should be between 50% and 100% greater than the maximum expected load.
4. Remove existing intermediate transverse stiffeners, stringer bearing stiffeners and elastomeric bearing within the limits of repair area. Clean/paint newly exposed faces of stringer according to the Special Provision for "Cleaning and Painting Contact Surface Areas of Existing Steel Structures".
5. Construct templates for location of existing rivets, bolts and fabrication of fill and repair plates.
6. Install proposed Fill Plates, Repair Plates, Intermediate Transverse Stiffeners, Elastomeric Bearing and Bearing Stiffeners at end of Stringers N21.4 as indicated in the Plans.
7. Remove Temporary Shoring Tower.

NOTES:

1. For Sections A-A thru D-D, Fill Plate D, Repair Plates and Sway Frame Connection Plates, see Sheet S03A-106.

BILL OF MATERIAL

ITEM	UNIT	QUANTITY
Structural Steel Repair	Pound	1,880

LEGEND

- ○ Field drill holes in new steel using existing steel as a template
- • Shop drill holes in new steel. Use new steel as template to field drill holes in existing steel.

MODEL: Default
FILE NAME: P:\2004-823 PTB195-014 HBM\WO#7 I-90 Various Overlays\Ashland Ave\Sheet Files\0160133-62K73-S89A-Structural Steel Repairs 21.4-1.dgn
4/30/2024 3:22:29 PM

HBM ENGINEERING GROUP, LLC

USER NAME =	DESIGNED - LAB	REVISED -	
	CHECKED - MI	REVISED -	
PLOT SCALE =	DRAWN - LAB	REVISED -	
PLOT DATE =	DATE - 4/29/2024	REVISED -	

STATE OF ILLINOIS
DEPARTMENT OF TRANSPORTATION

STRUCTURAL STEEL REPAIRS AT N21.4 (SHT. 1 OF 2)
STRUCTURE NO. 016-0133 (NB)

SHEET S03A-105 OF S03A-148 SHEETS

F.A.I. RTE.	SECTION	COUNTY	TOTAL SHEETS	SHEET NO.
90/94	2020-005-BR	COOK	908	433
		CONTRACT NO. 62K73		
	ILLINOIS	FED. AID PROJECT		

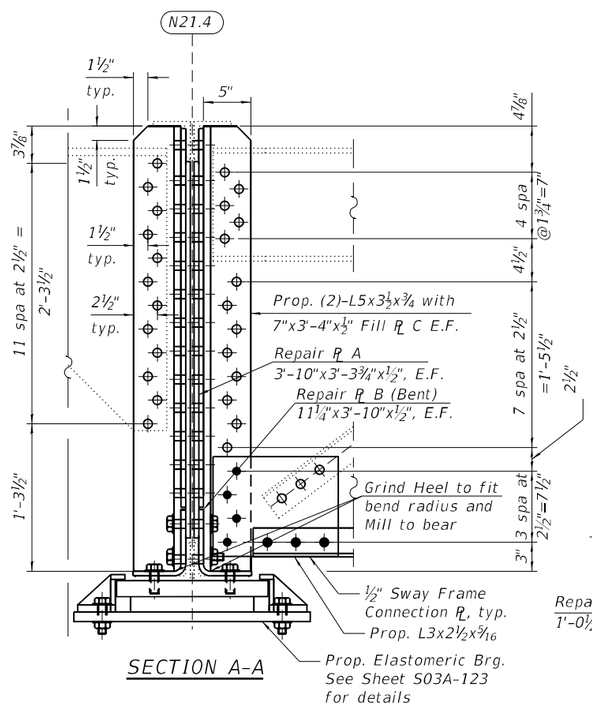

SECTION A-A

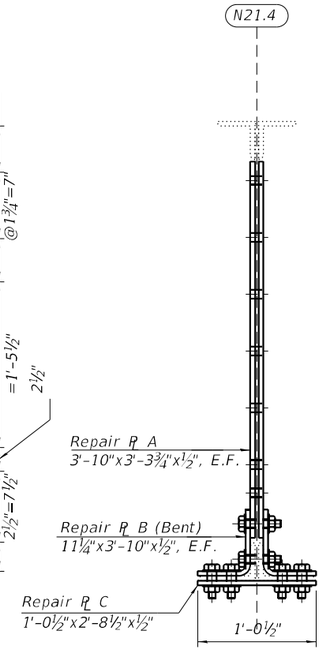

SECTION B-B

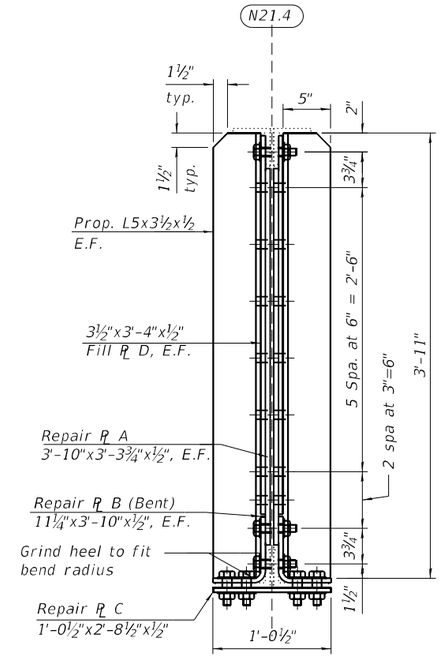

SECTION C-C

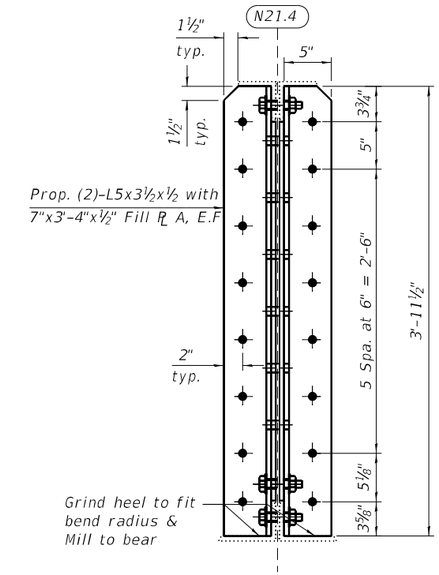

SECTION D-D

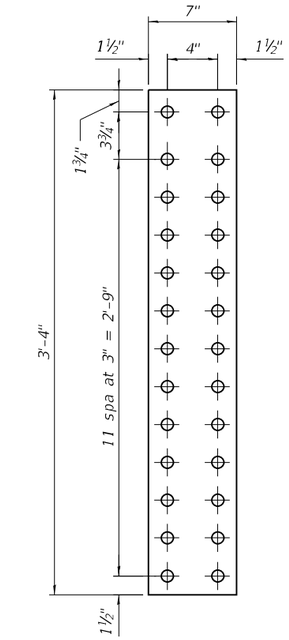

FILL PLATE C

7"x3'-4"x½"

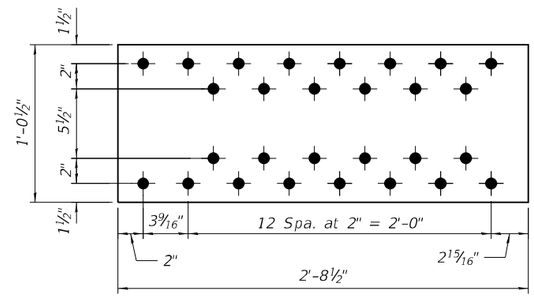

REPAIR PLATE C

(1'-0½"x2'-8½"x½" PL)

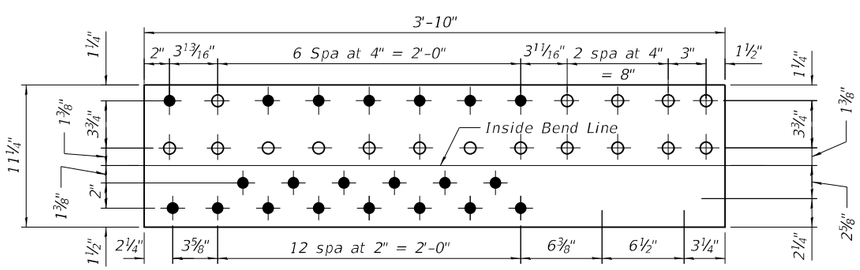

REPAIR PLATE B

(11¼"x3'-10"x½" PL)

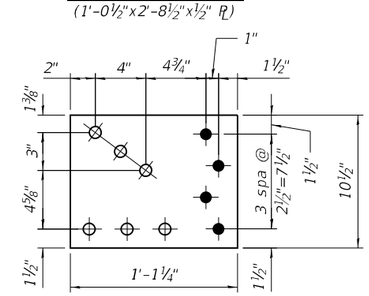

SWAY FRAME CONNECTION PL

(10½"x1'-1¼"x½" PL)

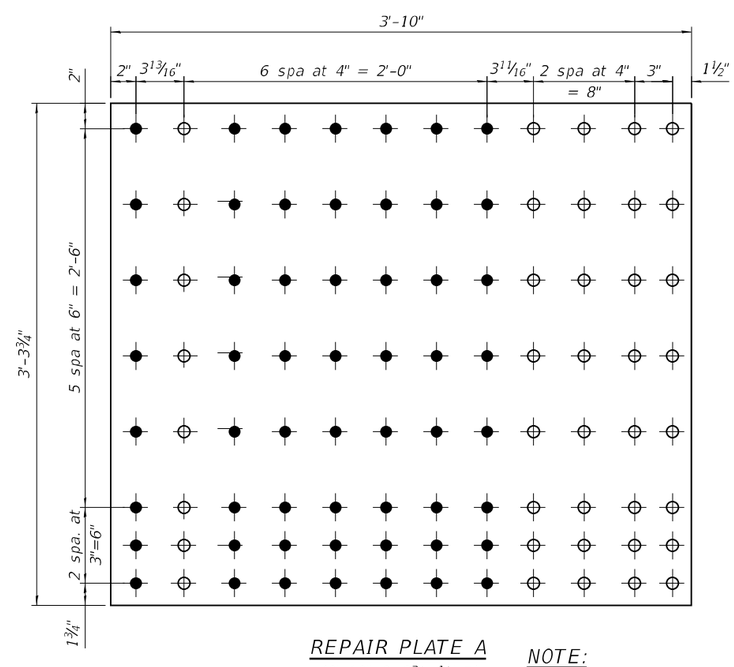

REPAIR PLATE A

(3'-10"x3'-3¾"x½" PL)

NOTE:

1. For Bill of Material, see Sheet S03A-105.

MODEL: Default
FILE NAME: P:\2004-825 PTB 195-014 HBM\WO#7 I-90 Various Overlays\Ashland Ave\Sheet Files\0160133-62K73-S89B-Structural Steel Repairs 21.4-2.dgn
4/30/2024 3:22:31 PM

HBM ENGINEERING GROUP, LLC

USER NAME =	DESIGNED - LAB	REVISED -
	CHECKED - MI	REVISED -
PLOT SCALE =	DRAWN - LAB	REVISED -
PLOT DATE =	DATE - 4/29/2024	REVISED -

STATE OF ILLINOIS
DEPARTMENT OF TRANSPORTATION

STRUCTURAL STEEL REPAIRS AT N21.4 (SHT. 2 OF 2)
STRUCTURE NO. 016-0133 (NB)

SHEET S03A-106 OF S03A-148 SHEETS

F.A.I. RTE.	SECTION	COUNTY	TOTAL SHEETS	SHEET NO.
90/94	2020-005-BR	COOK	908	434
		CONTRACT NO. 62K73		
		ILLINOIS	FED. AID PROJECT	

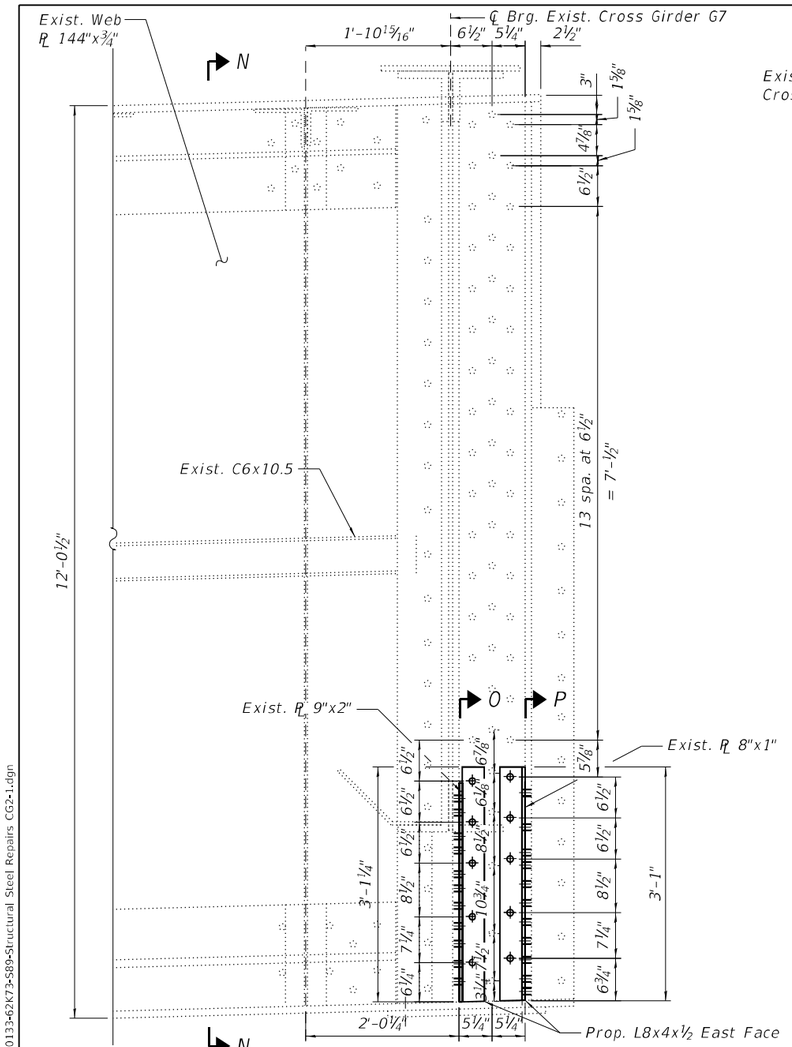

ELEVATION
(Looking East)

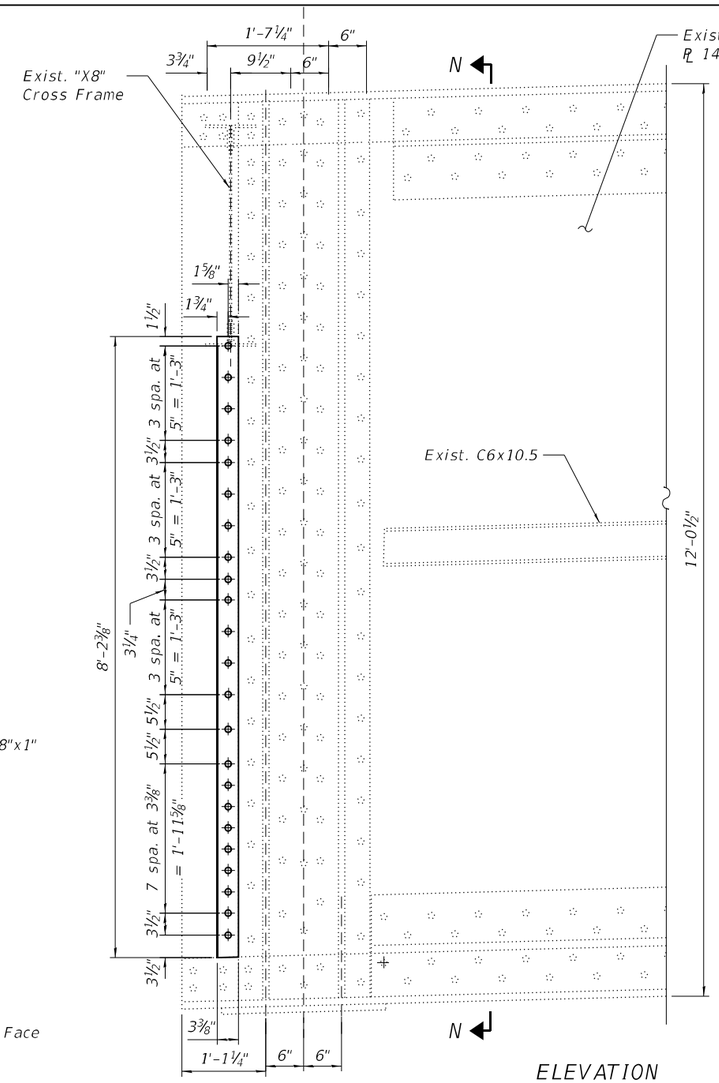

ELEVATION
(Looking East)

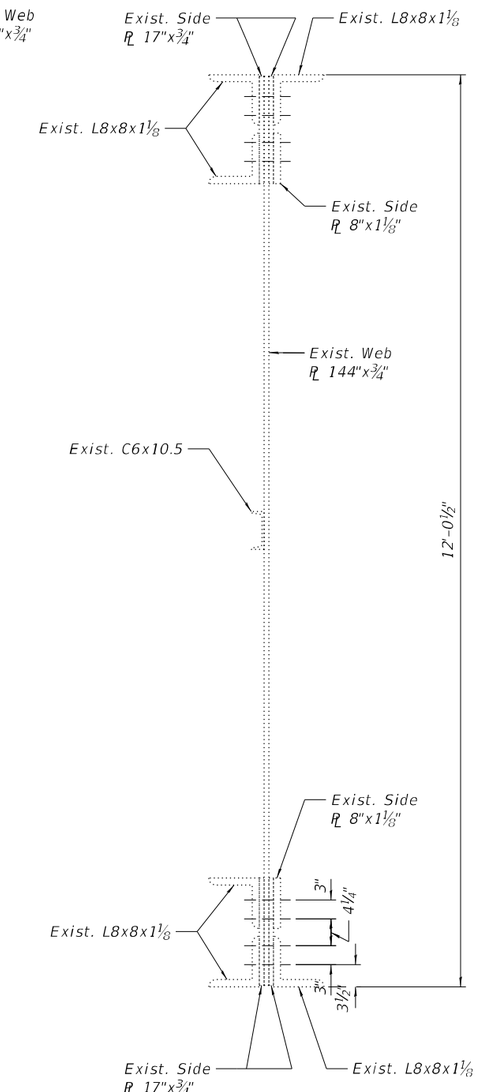

SECTION N-N

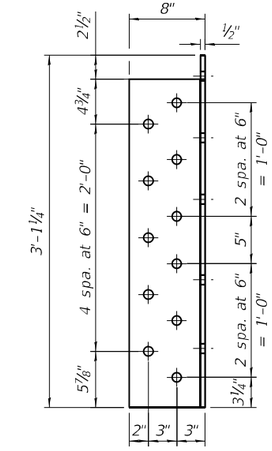

SECTION O-O

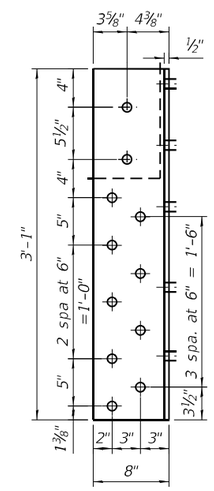

SECTION P-P

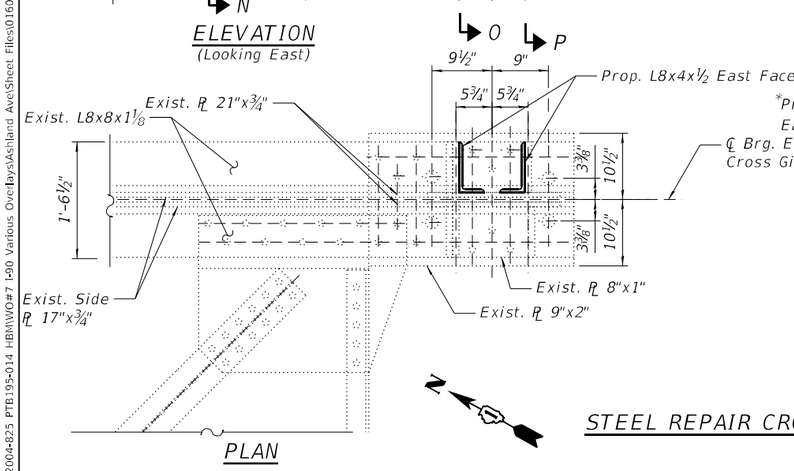

PLAN

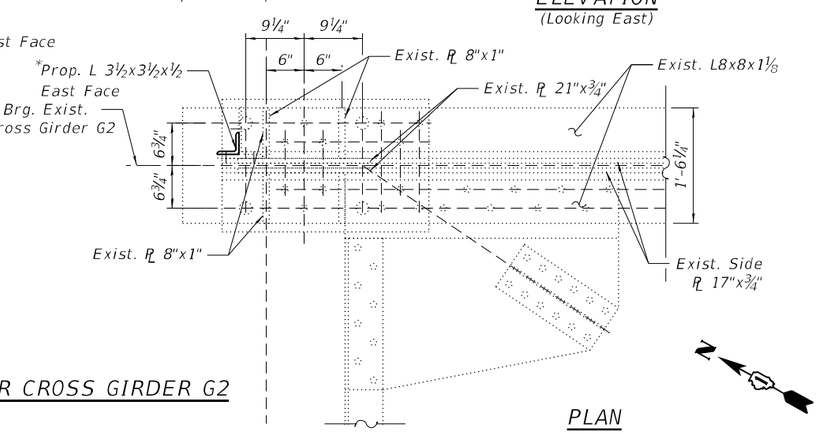

PLAN

STEEL REPAIR CROSS GIRDER G2

BILL OF MATERIAL

ITEM	UNIT	QUANTITY
Structural Steel Repair	Pound	300

LEGEND

- ○ Field drill holes in new steel using existing steel as a template
- • Shop drill holes in new steel. Use new steel as template to field drill holes in existing steel.

NOTE:

1. For Cross Frame replacement, see Sheet S03A-115.

*Grind L-shape angle to match existing WT-shape angle

MODEL: Default
FILE NAME: P:\2004-825 PTB 195-014 HBM\WO#7 I-90 Various Overlays\Ashland Ave\Sheet Files\016133-62K73-589-Structural Steel Repairs CG2-1.dgn
4/30/2024 3:22:39 PM

HBM ENGINEERING GROUP, LLC

USER NAME =	DESIGNED - JJS, EN	REVISED -
	CHECKED - MI	REVISED -
PLOT SCALE =	DRAWN - JJS, EN	REVISED -
PLOT DATE =	DATE - 4/29/2024	REVISED -

STATE OF ILLINOIS
DEPARTMENT OF TRANSPORTATION

STRUCTURAL STEEL REPAIRS AT G2
STRUCTURE NO. 016-0133 (NB)
SHEET S03A-107 OF S03A-148 SHEETS

F.A.I. RTE.	SECTION	COUNTY	TOTAL SHEETS	SHEET NO.
90/94	2020-005-BR	COOK	908	435
		CONTRACT NO. 62K73		
		ILLINOIS FED. AID PROJECT		

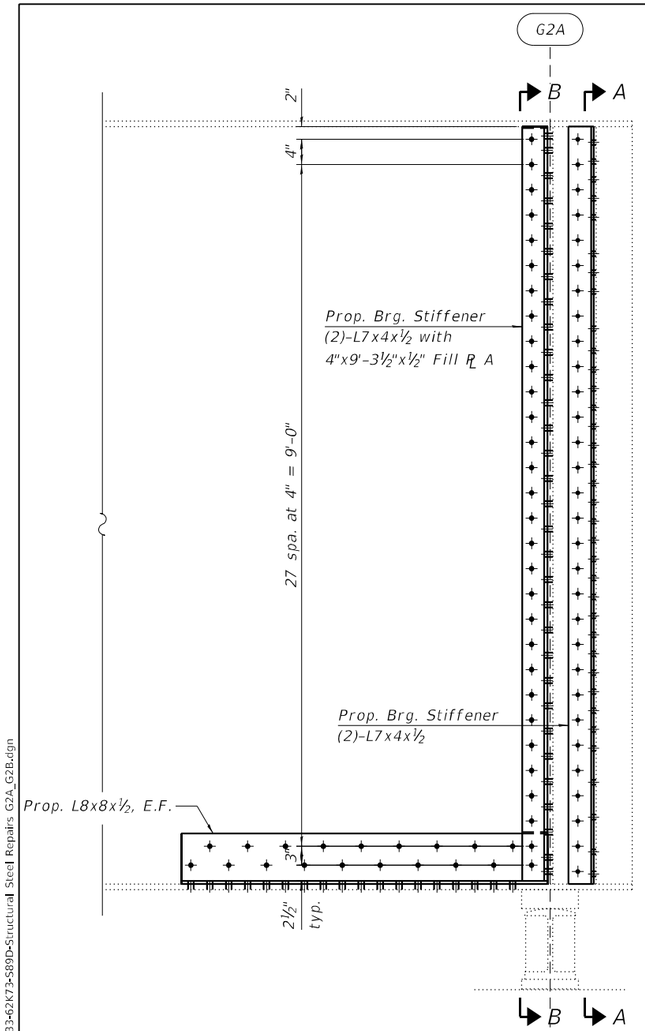

STEEL REPAIR CROSS GIRDER G2A – ELEVATION

(Looking North)

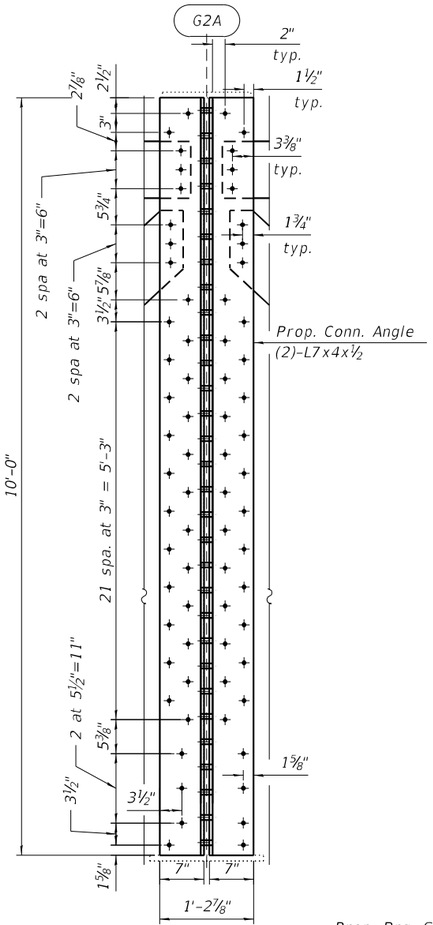

SECTION A–A

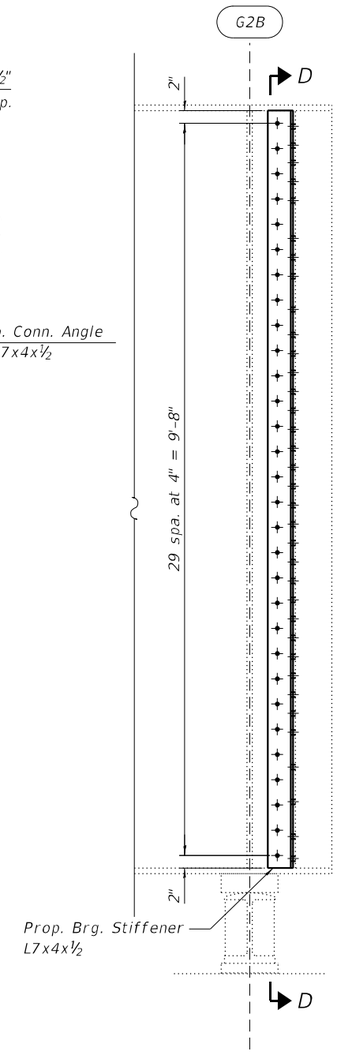

STEEL REPAIR CROSS GIRDER G2B – ELEVATION

(Looking North)

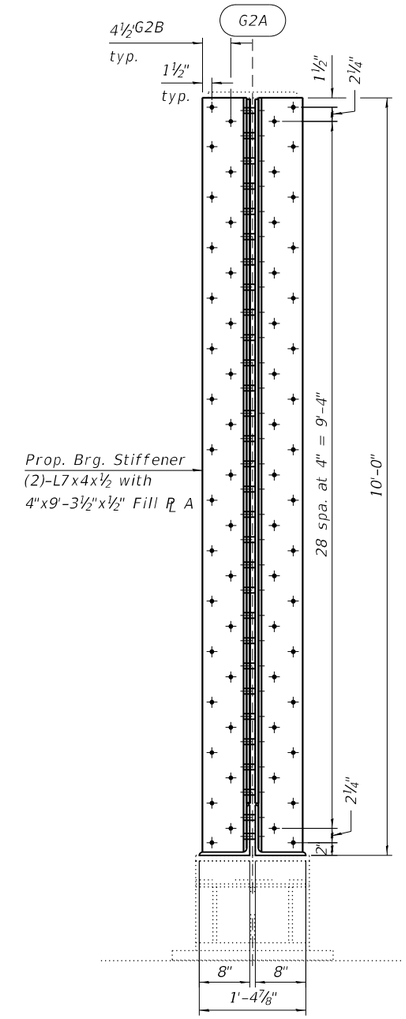

SECTION B–B

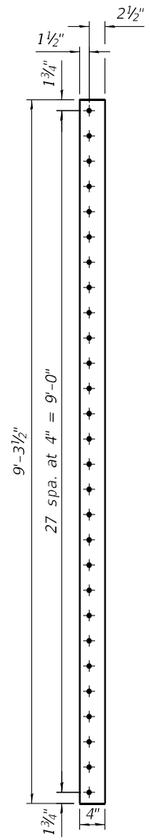

FILL PLATE A

(4"x9'-3½"x½" PL)

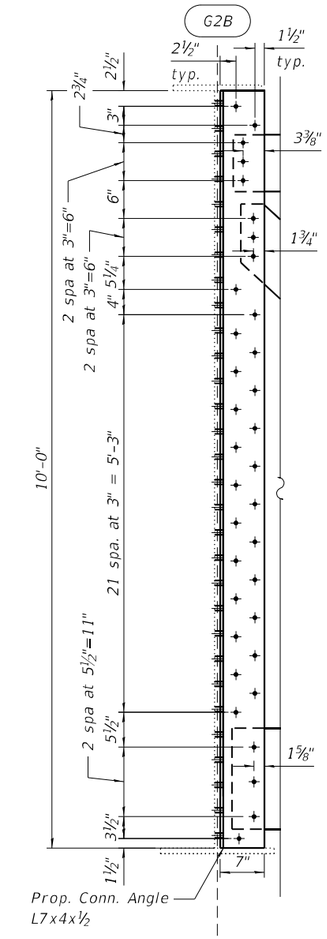

SECTION D–D

NOTE:

1. For Cross Frame replacement, see Sheet S03A-115.

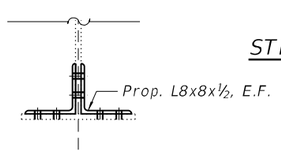

SECTION C–C

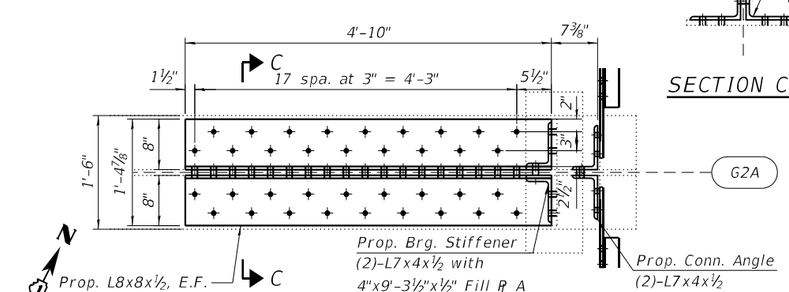

STEEL REPAIR CROSS GIRDER G2A – PLAN

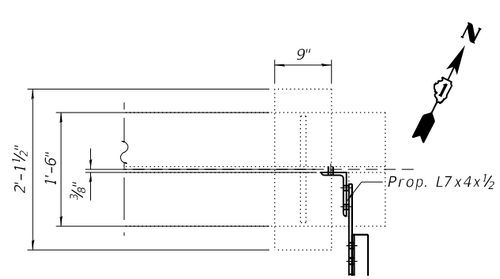

STEEL REPAIR CROSS GIRDER G2B – PLAN

SUGGESTED CONSTRUCTION SEQUENCE FOR STRINGER REPAIR:

1. Remove existing intermediate transverse stiffeners at the proposed location indicated in the "Steel Repair Cross Girder G2A – Elevation" and "Steel Repair Cross Girder G2B – Elevation" and clean/paint newly exposed faces of stringer web according to the Special Provision for "Cleaning and Painting Contact Surface Areas of Existing Steel Structures".
2. Install proposed Fill Plate A at the prop. location indicated in the "Steel Repair Cross Girder G2B – Elevation".
3. Construct templates for location of existing rivets, bolts and fabrication of fill and repair plates.
4. Install proposed angles as indicated in the Plans.

BILL OF MATERIAL

G2A

ITEM	UNIT	QUANTITY
Structural Steel Repair	Pound	1,460

BILL OF MATERIAL

G2B

ITEM	UNIT	QUANTITY
Structural Steel Repair	Pound	210

LEGEND

- ○ Field drill holes in new steel using existing steel as a template
- • Shop drill holes in new steel. Use new steel as template to field drill holes in existing steel.

HBM ENGINEERING GROUP, LLC

USER NAME =	DESIGNED - JJS, EN	REVISED -	
	CHECKED - MI	REVISED -	
PLOT SCALE =	DRAWN - JJS, EN	REVISED -	
PLOT DATE =	DATE - 4/29/2024	REVISED -	

STATE OF ILLINOIS
DEPARTMENT OF TRANSPORTATION

STRUCTURAL STEEL REPAIRS AT G2A & G2B
STRUCTURE NO. 016-0133 (NB)

SHEET S03A-108 OF S03A-148 SHEETS

F.A.I. RTE.	SECTION	COUNTY	TOTAL SHEETS	SHEET NO.
90/94	2020-005-BR	COOK	908	436
		CONTRACT NO. 62K73		
		ILLINOIS FED. AID PROJECT		

MODEL: Default
FILE NAME: P:\2004-825 PTB195-014 HBM\WO#7 I-90 Various Overlays\Ashland Ave\Sheet Files\0160133-62K73-S89D-Structural Steel Repairs G2A_G2B.dgn
5/1/2024 8:25:11 AM

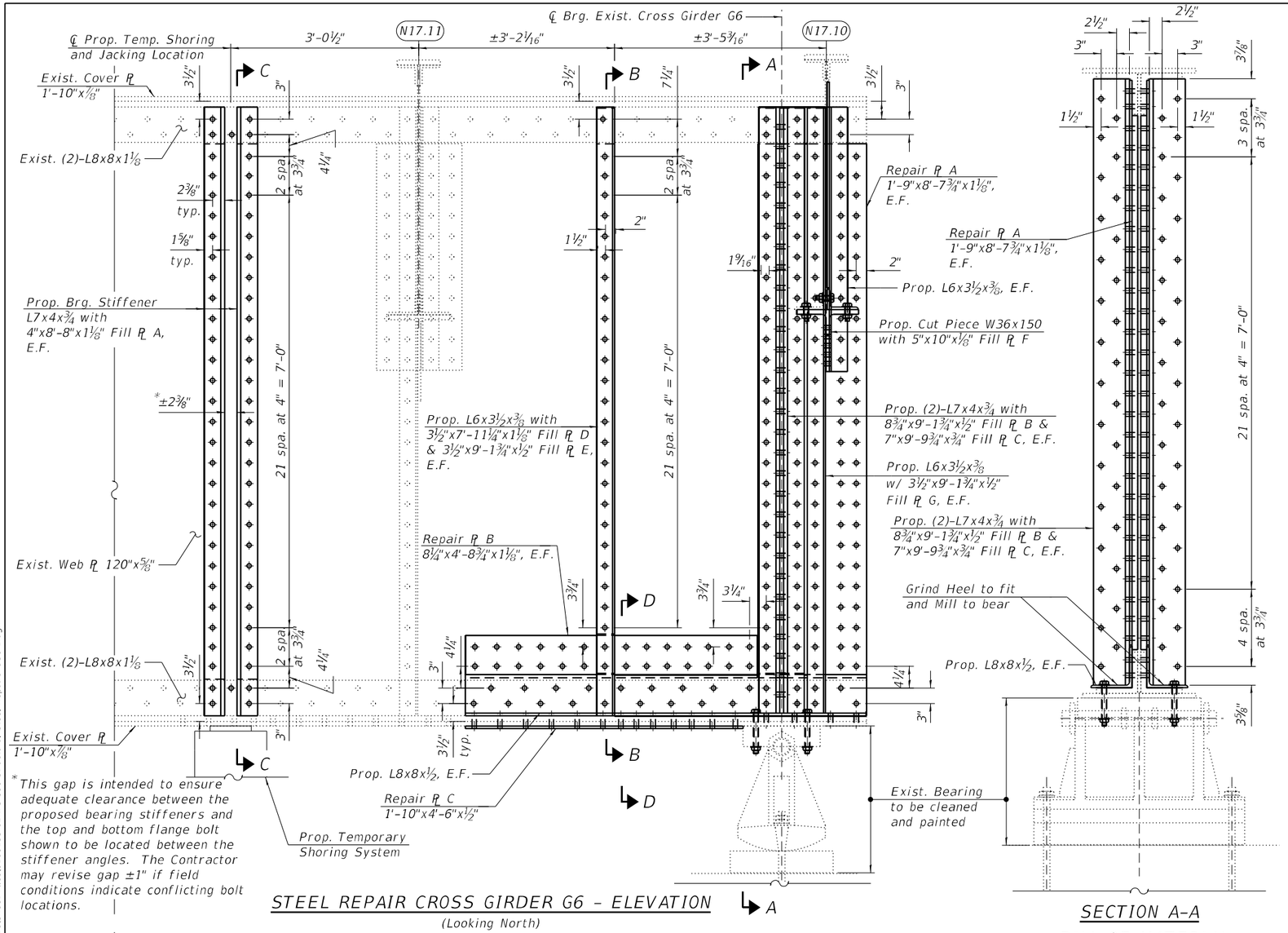

*This gap is intended to ensure adequate clearance between the proposed bearing stiffeners and the top and bottom flange bolt shown to be located between the stiffener angles. The Contractor may revise gap ±1" if field conditions indicate conflicting bolt locations.

STEEL REPAIR CROSS GIRDER G6 - ELEVATION

(Looking North)

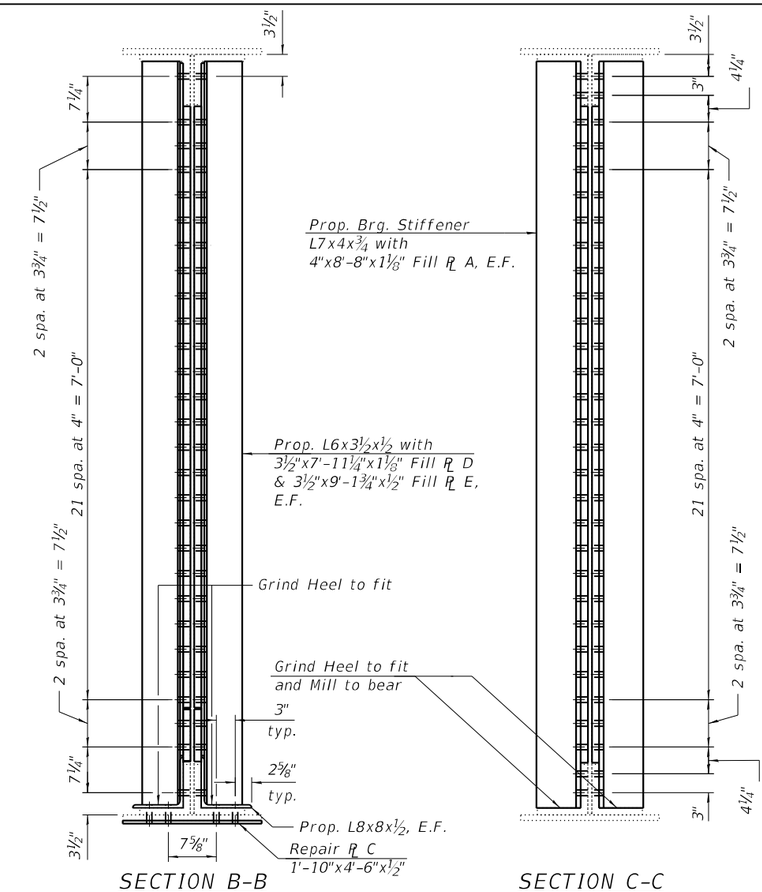

SECTION B-B

SECTION C-C

SECTION A-A

SUGGESTED CONSTRUCTION SEQUENCE FOR GIRDER REPAIR:

1. Remove existing intermediate transverse stiffeners at the proposed jacking/temporary shoring location indicated in the "Steel Repair Cross Girder G6 - Elevation" and clean/paint newly exposed faces of girder web according to the Special Provision for "Cleaning and Painting Contact Surface Areas of Existing Steel Structures".

2. Install proposed Fill Plates A and bearing stiffeners at the prop. jacking/temp. shoring location indicated in the "Steel Repair Cross Girder G6 - Elevation" and erect prop. Temporary Shoring tower. See Special Provision for "Temporary Shoring."

3. Jack girder to relieve pressure at existing bearing. The jack capacities for lifting should be based on maximum expected load present during the lift derived from the reactions shown in the Beam Reaction Table included with the plans. The jack capacity provided should be between 50% and 100% greater than the maximum expected load.

4. Remove existing intermediate transverse stiffeners, stringer connection elements, and bearing stiffeners within the limits of repair area. Clean/paint newly exposed faces of Girder G6 according to the Special Provision for "Cleaning and Painting Contact Surface Areas of Existing Steel Structures".

5. Construct templates for location of existing rivets, botls and fabrication of repair and fill plates

6. Install proposed Fill Plates, Repair Plates, Brg. Stiffeners, Intermediate Transverse Stiffeners, connection plates and bearing connection bolts for Girder G6.

7. Remove Temporary Shoring Tower.

BILL OF MATERIAL

ITEM	UNIT	QUANTITY
Structural Steel Repair	Pound	6,920

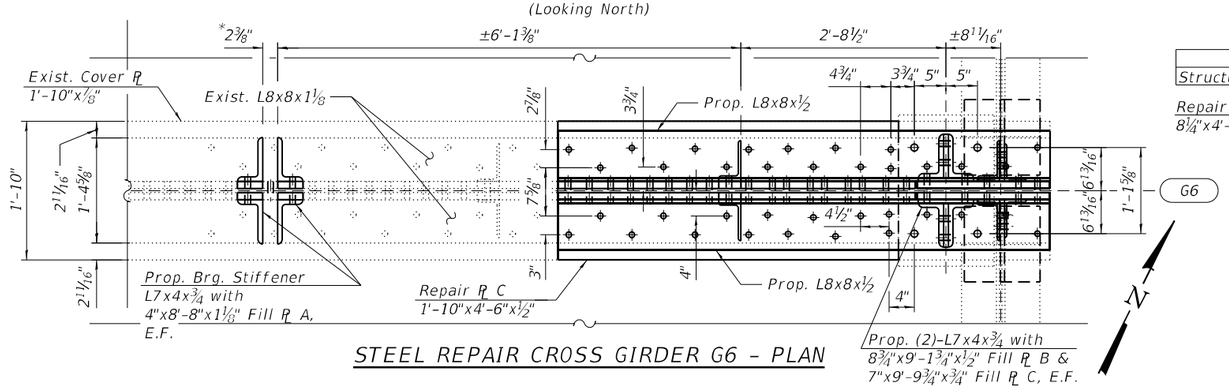

STEEL REPAIR CROSS GIRDER G6 - PLAN

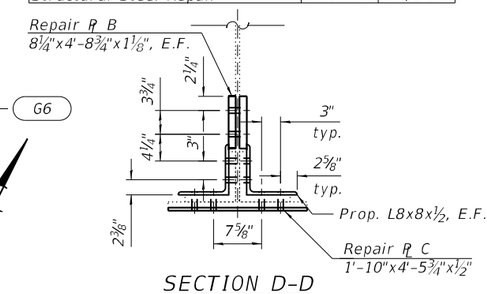

SECTION D-D

NOTE:

1. For Fill and Repair Plate details, see Sheet S03A-110.

USER NAME =	DESIGNED - JJS, EN	REVISED -	
	CHECKED - MI	REVISED -	
PLOT SCALE =	DRAWN - JJS, EN	REVISED -	
PLOT DATE =	DATE - 4/29/2024	REVISED -	

HBM ENGINEERING GROUP, LLC

STATE OF ILLINOIS
DEPARTMENT OF TRANSPORTATION

STRUCTURAL STEEL REPAIRS AT G6 (SHT. 1 OF 2)
STRUCTURE NO. 016-0133 (NB)

SHEET S03A-109 OF S03A-148 SHEETS

F.A.I. RTE.	SECTION	COUNTY	TOTAL SHEETS	SHEET NO.
90/94	2020-005-BR	COOK	908	437
		CONTRACT NO. 62K73		
		ILLINOIS	FED. AID PROJECT	

MODEL: Default
FILE NAME: P:\2004-823 PTB 195-014 HBM\WO#7 I-90 Various Overlays\Ashland Ave\Sheet Files\0160133-62K73-S90-Structural Steel Repairs CG6-1.dgn
7/2/2024 1:15:22 PM

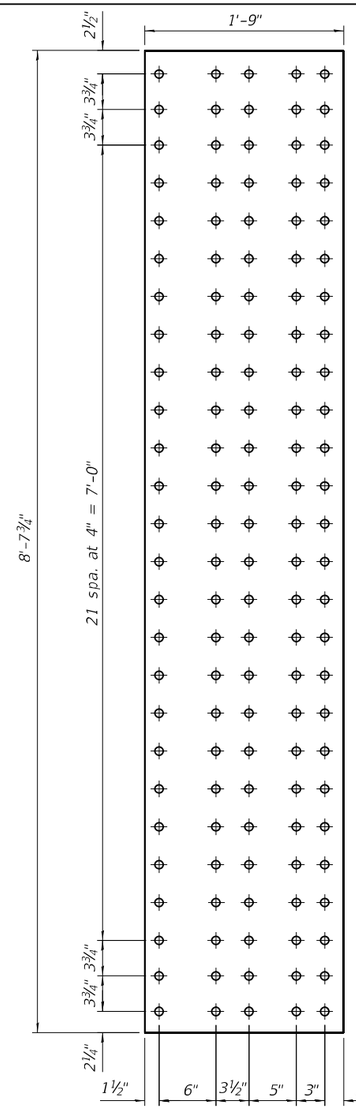

REPAIR PLATE A

(1'-9"x8'-7¾"x1⅛" PL)

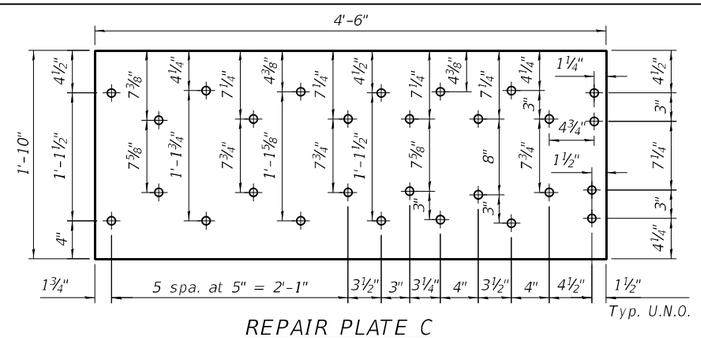

REPAIR PLATE C

(1'-10"x4'-6"x½" PL)

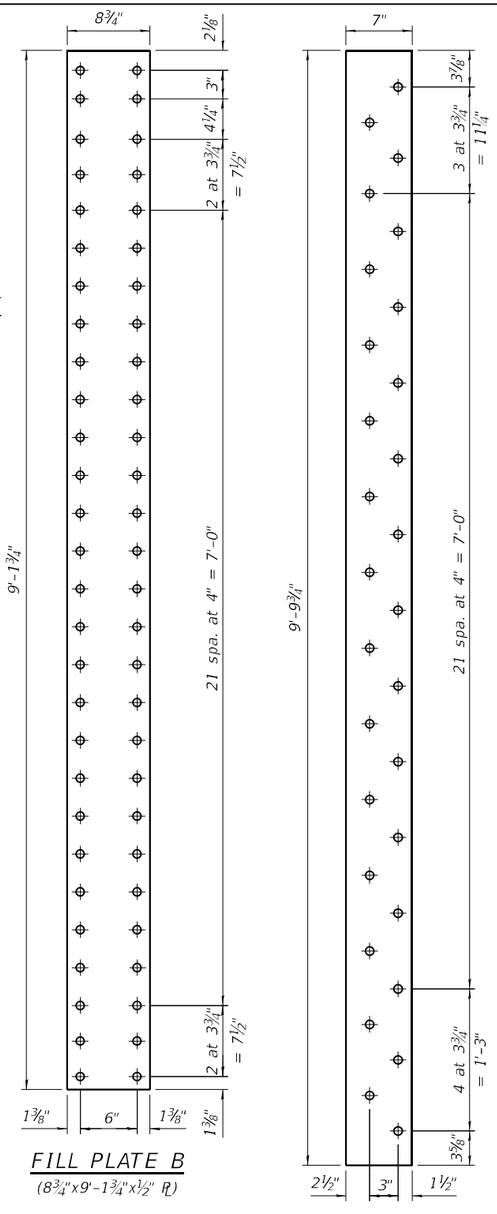

FILL PLATE B

(8¾"x9'-1¾"x½" PL)

FILL PLATE C

(7"x9'-9¾"x¾" PL)

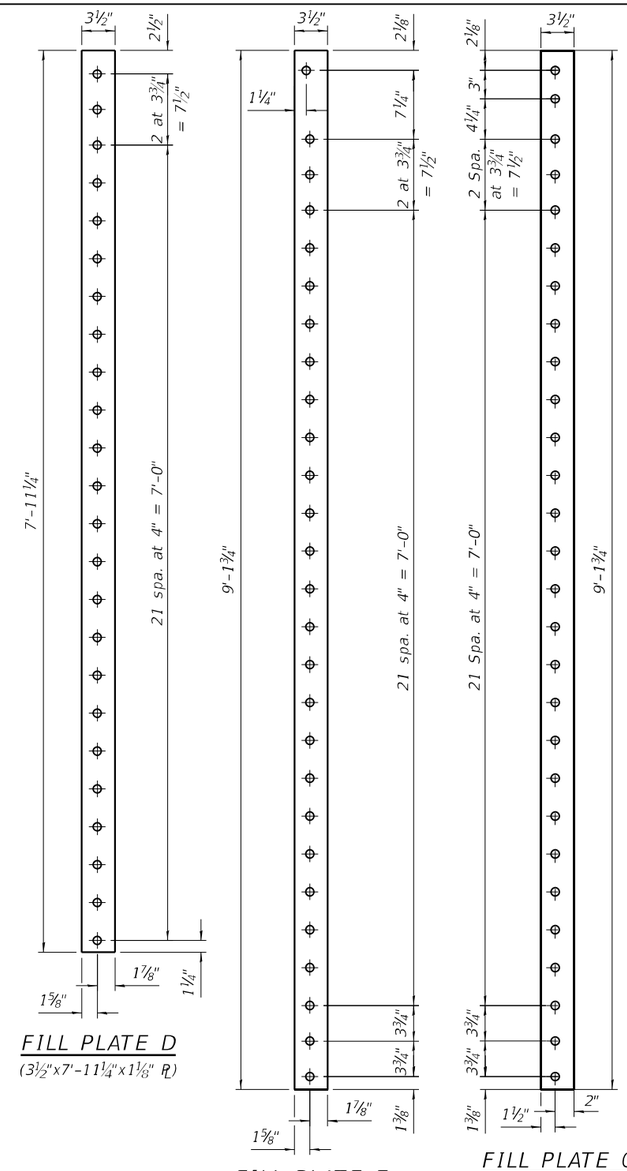

FILL PLATE D

(3½"x7'-11¼"x1⅛" PL)

FILL PLATE E

(3½"x9'-1¾"x½" PL)

FILL PLATE G

(3½"x9'-1¾"x½" PL)

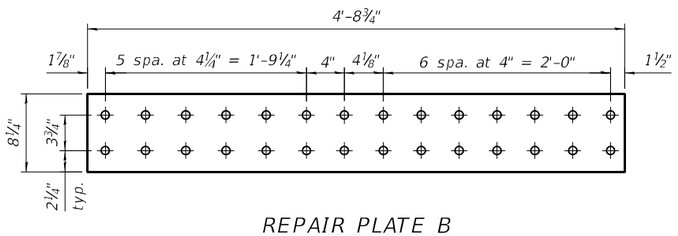

REPAIR PLATE B

(8¼"x4'-8¾"x1⅛" PL)

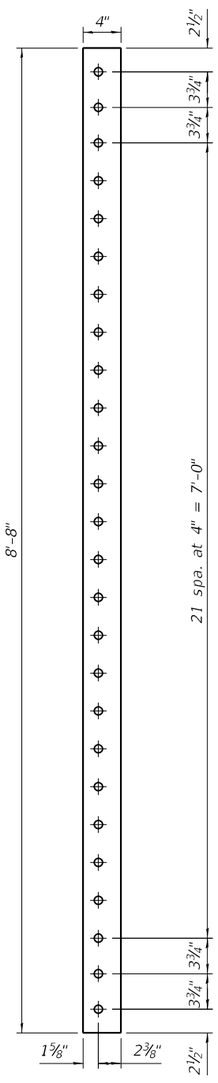

FILL PLATE A

(4"x8'-8"x1⅛" PL)

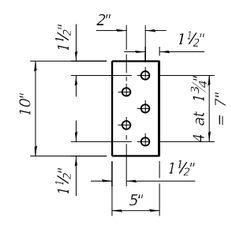

FILL PLATE F

(5"x10"x⅛" PL)

NOTE:

1. For Bill of Material, see Sheet S03A-109.

MODEL: Default
FILE NAME: P:\2004-825 PTB195-014 HBM\WO#7 I-90 Various Overlays\Ashland Ave\Sheet Files\0160133-62K73-S91-Structural Steel Repairs CG6-2.dgn
7/2/2024 3:38:46 PM

HBM ENGINEERING GROUP, LLC

USER NAME =	DESIGNED - JJS, EN	REVISED -	
	CHECKED - MI	REVISED -	
PLOT SCALE =	DRAWN - JJS, EN	REVISED -	
PLOT DATE =	DATE - 4/29/2024	REVISED -	

STATE OF ILLINOIS
DEPARTMENT OF TRANSPORTATION

STRUCTURAL STEEL REPAIRS AT G6 (SHT. 2 OF 2)
STRUCTURE NO. 016-0133 (NB)

SHEET S03A-110 OF S03A-148 SHEETS

F.A.I. RTE.	SECTION	COUNTY	TOTAL SHEETS	SHEET NO.
90/94	2020-005-BR	COOK	908	438
		CONTRACT NO. 62K73		
		ILLINOIS	FED. AID PROJECT	

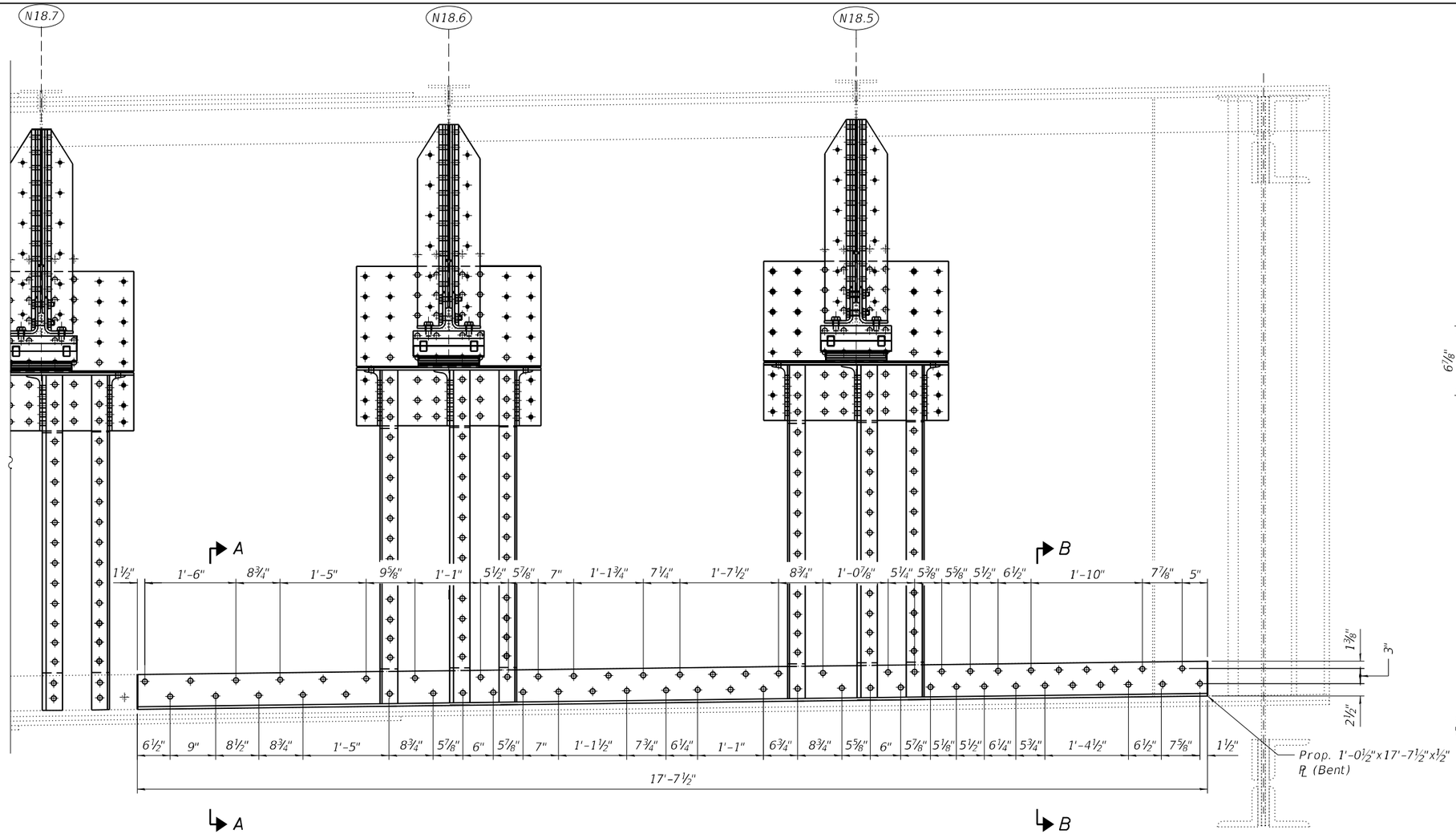

GIRDER G7 - ELEVATION

(Looking North)

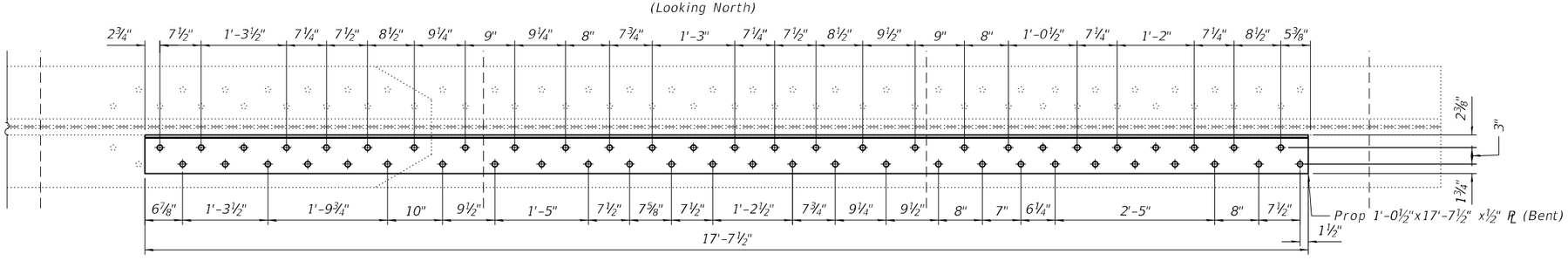

GIRDER G7 - BOTTOM FLANGE PLAN

N

BILL OF MATERIAL

ITEM	UNIT	QUANTITY
Structural Steel Repair	Pound	500

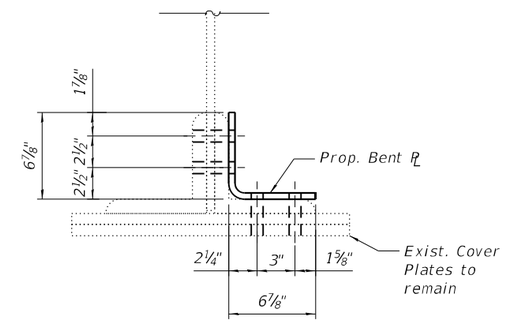

SECTION A-A

(Looking East)

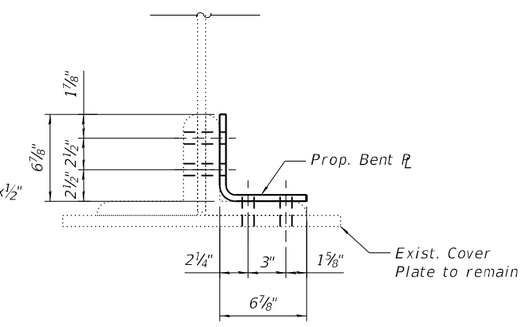

SECTION B-B

(Looking East)

NOTES:

1. For N18.5 thru N18.7 repairs and associated Suggested Construction Sequence, see Sheets S03A-088 thru S03A-091.
2. All bolts in Girder G7 shall be 1" diameter in 1 1/16" holes.

MODEL: Default
FILE NAME: P:\2004-825 PTB195-014 HBM\WO#7 I-90 Various Overlays\Ashland Ave\Sheet Files\0160133-62K73-S92A-Structural Steel Repairs CG7-1.dgn

HBM ENGINEERING GROUP, LLC

USER NAME =	DESIGNED - LAB	REVISED -
	CHECKED - MI	REVISED -
PLOT SCALE =	DRAWN - LAB	REVISED -
PLOT DATE =	DATE - 4/29/2024	REVISED -

STATE OF ILLINOIS
DEPARTMENT OF TRANSPORTATION

STRUCTURAL STEEL REPAIRS AT G7
STRUCTURE NO. 016-0133 (NB)

SHEET S03A-111 OF S03A-148 SHEETS

F.A.I. RTE.	SECTION	COUNTY	TOTAL SHEETS	SHEET NO.
90/94	2020-005-BR	COOK	908	439
		CONTRACT NO. 62K73		
		ILLINOIS FED. AID PROJECT		

4/30/2024 3:22:53 PM

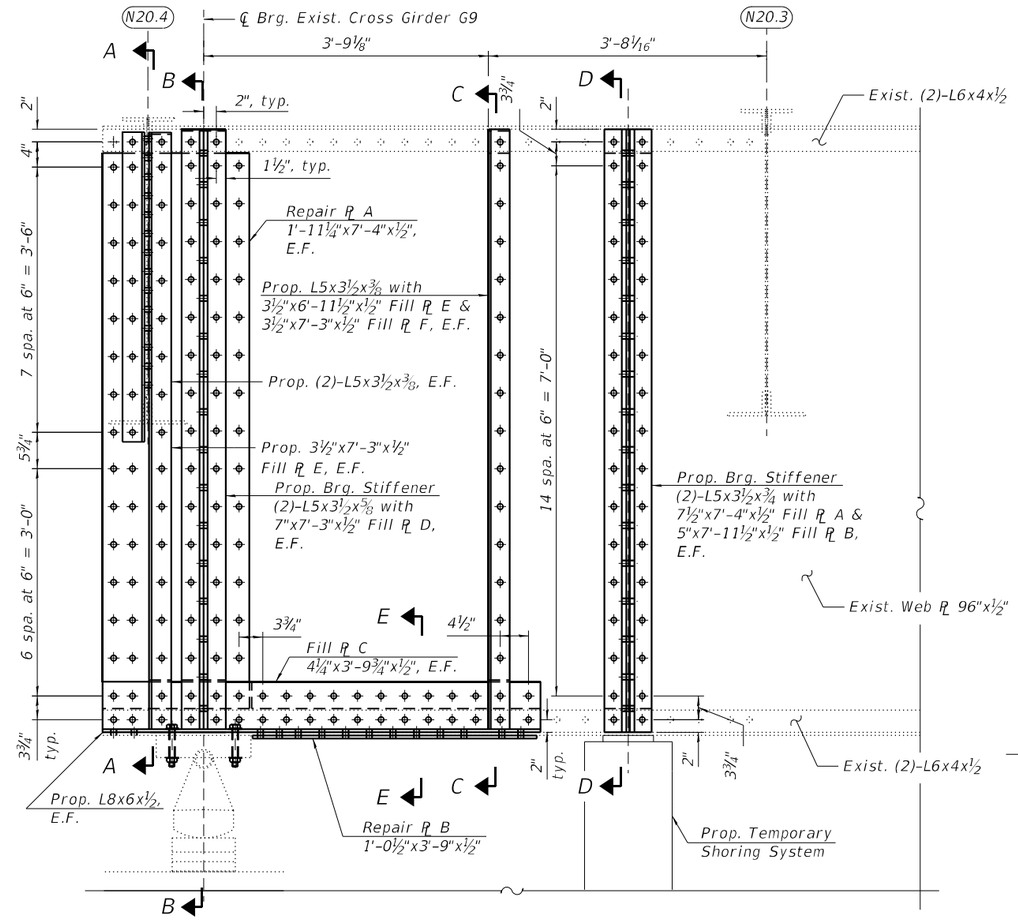

STEEL REPAIR CROSS GIRDER G9 – ELEVATION

(Looking North)

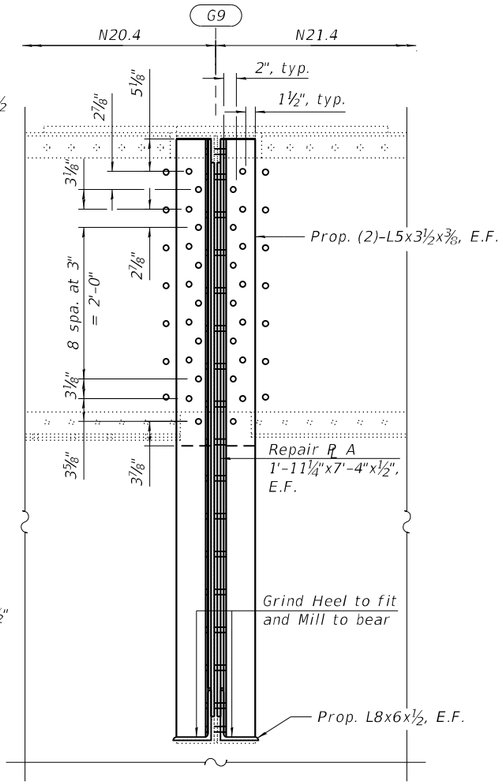

SECTION A-A

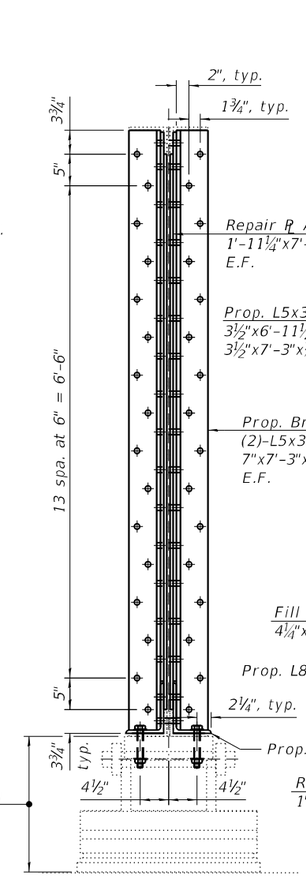

SECTION B-B

SECTION C-C

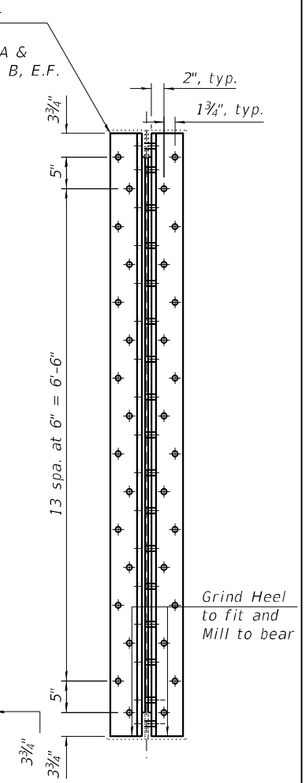

SECTION D-D

BILL OF MATERIAL

ITEM	UNIT	QUANTITY
Structural Steel Repair	Pound	3,380

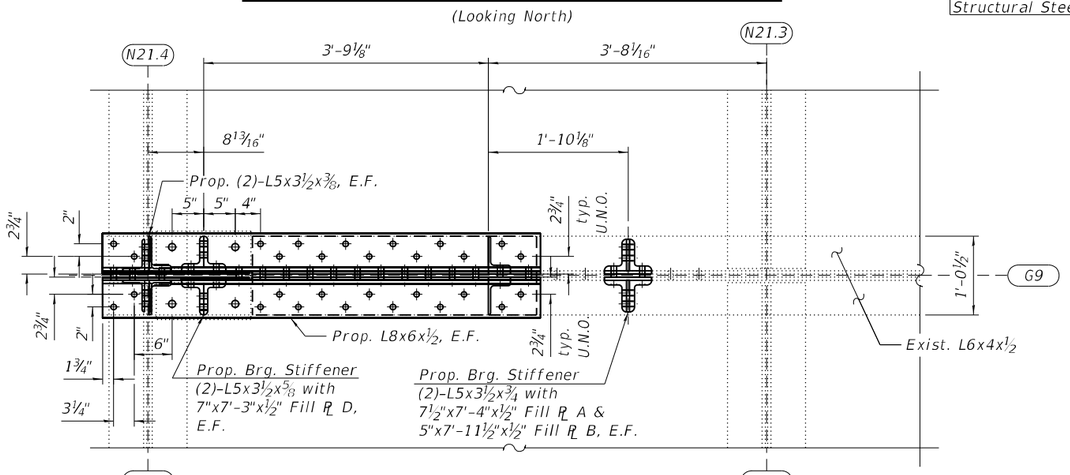

STEEL REPAIR CROSS GIRDER G9 – PLAN

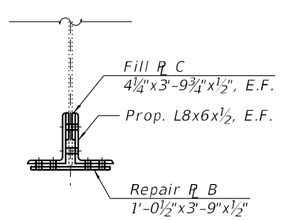

SECTION E-E

SUGGESTED CONSTRUCTION SEQUENCE FOR GIRDER REPAIR:

1. Clean/paint faces of girder web and flanges at the proposed jacking/temp. shoring location indicated in the "Steel Repair Cross Girder G9 – Elevation" according to the Special Provision for "Cleaning and Painting Contact Surface Areas of Existing Steel Structures".
2. Install proposed Fill Plate A, Fill Plate B and bearing stiffeners at the prop. jacking/temp. shoring location indicated in the "Steel Repair Cross Girder G9 – Elevation" and erect prop. Temporary Shoring tower. See Special Provision for "Temporary Shoring."
3. Jack girder to relieve pressure at existing bearing. The jack capacities for lifting should be based on maximum expected load present during the lift derived from the reactions shown in the Beam Reaction Table included with the plans. The jack capacity provided should be between 50% and 100% greater than the maximum expected load.
4. Remove existing intermediate transverse stiffeners, stringer connection elements, and bearing stiffeners within the limits of repair area. Clean/paint newly exposed faces of Girder G9 according to the Special Provision for "Cleaning and Painting Contact Surface Areas of Existing Steel Structures".
5. Construct templates for location of existing rivets, bolts and fabrication of fill and repair plates.
6. Install proposed Fill Plates, Repair Plates, Brg. Stiffeners, Intermediate Transverse Stiffeners, connection plates and bearing connection bolts for Girder G9.
7. Remove Temporary Shoring Tower.

NOTE:

1. For Fill and Repair Plate details, see Sheet S03A-113.

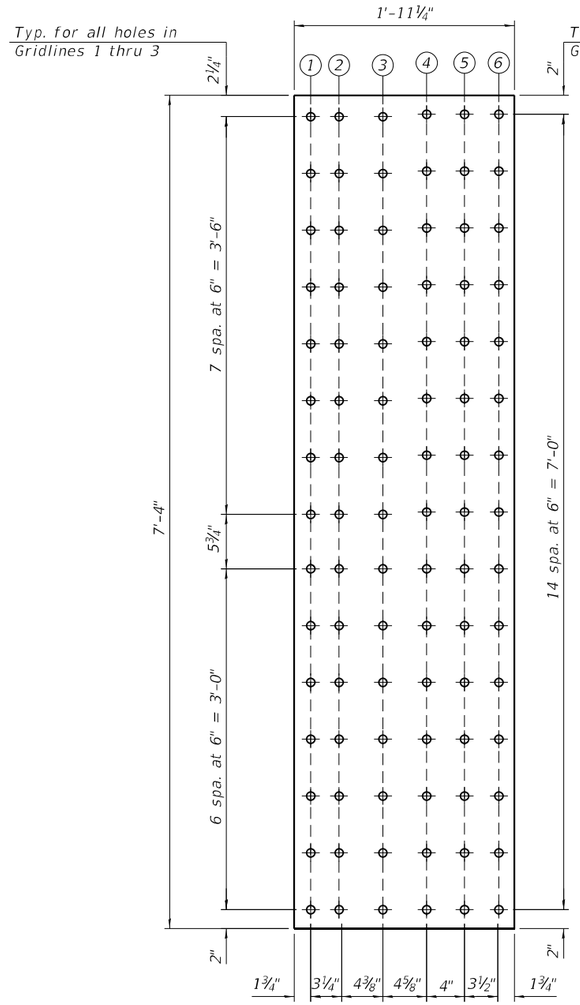

REPAIR PLATE A

(1'-11¼"x7'-4"x½" PL)

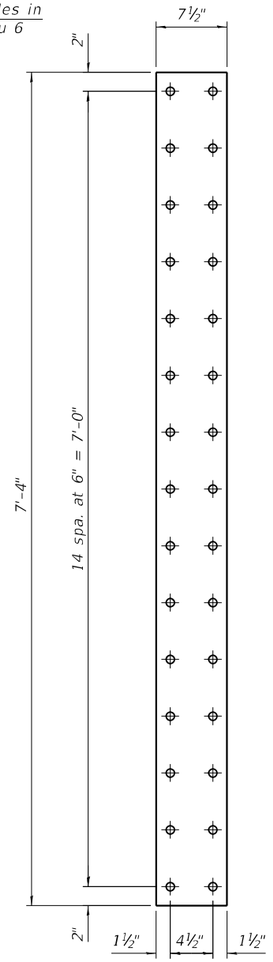

FILL PLATE A

(7½"x7'-4"x½" PL)

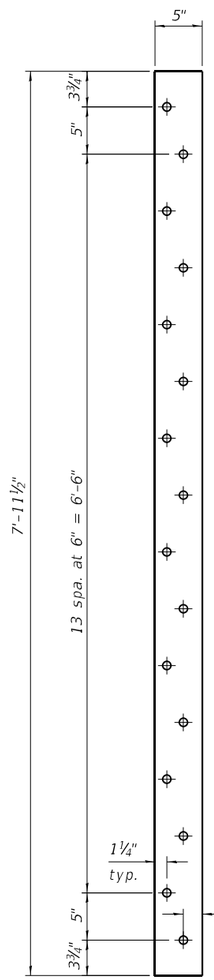

FILL PLATE B

(5"x7'-11½"x½" PL)

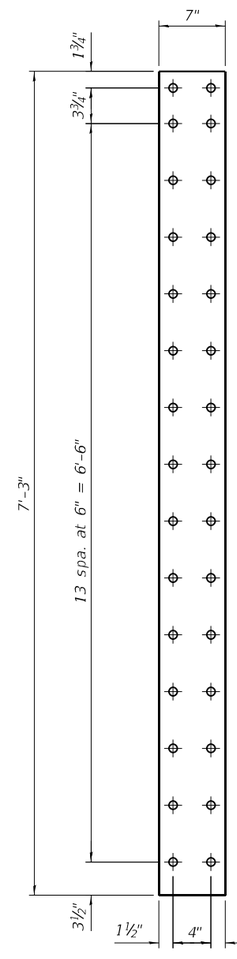

FILL PLATE D

(7"x7'-3"x½" PL)

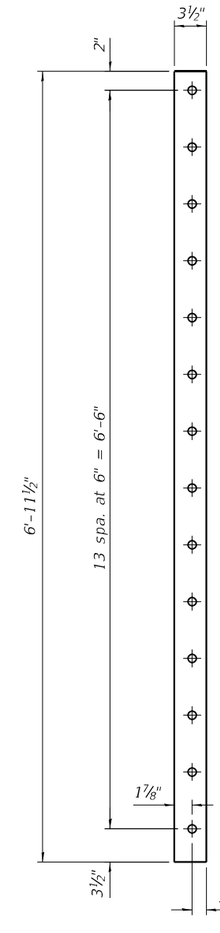

FILL PLATE E

(3½"x6'-11½"x½" PL)

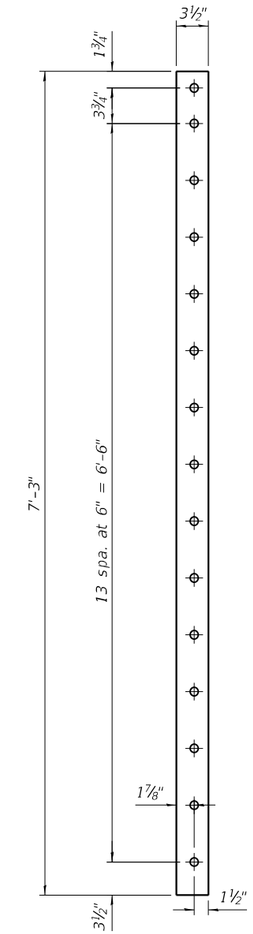

FILL PLATE F

(3½"x7'-3"x½" PL)

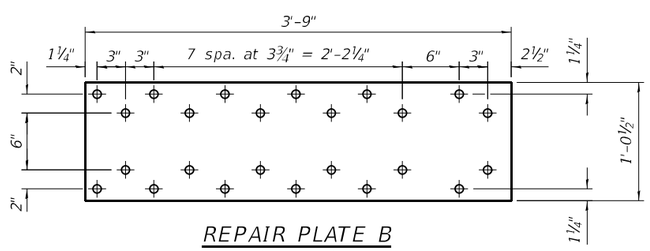

REPAIR PLATE B

(1'-0½"x3'-9"x½" PL)

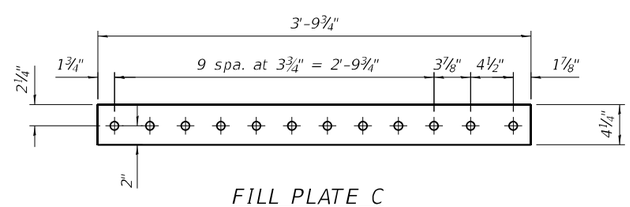

FILL PLATE C

(4¼"x3'-9¾"x½" PL)

NOTE:

1. For Bill of Material, see Sheet S03A-113.

MODEL: Default
FILE NAME: P:\2004-825 PTB195-014 HBM\WO#7 I-90 Various Overlays\Ashland Ave\Sheet Files\0160133-62K73-S03A-Structural Steel Repairs CG9-2.dgn

4/30/2024 3:23:01 PM

HBM ENGINEERING GROUP, LLC

USER NAME =	DESIGNED - JJS	REVISED -	
	CHECKED - MI	REVISED -	
PLOT SCALE =	DRAWN - JJS	REVISED -	
PLOT DATE =	DATE - 4/29/2024	REVISED -	

STATE OF ILLINOIS
DEPARTMENT OF TRANSPORTATION

STRUCTURAL STEEL REPAIRS AT G9 (SHT. 2 OF 2)
STRUCTURE NO. 016-0133 (NB)

SHEET S03A-113 OF S03A-148 SHEETS

F.A.I. RTE.	SECTION	COUNTY	TOTAL SHEETS	SHEET NO.
90/94	2020-005-BR	COOK	908	441
		CONTRACT NO. 62K73		
		ILLINOIS	FED. AID PROJECT	

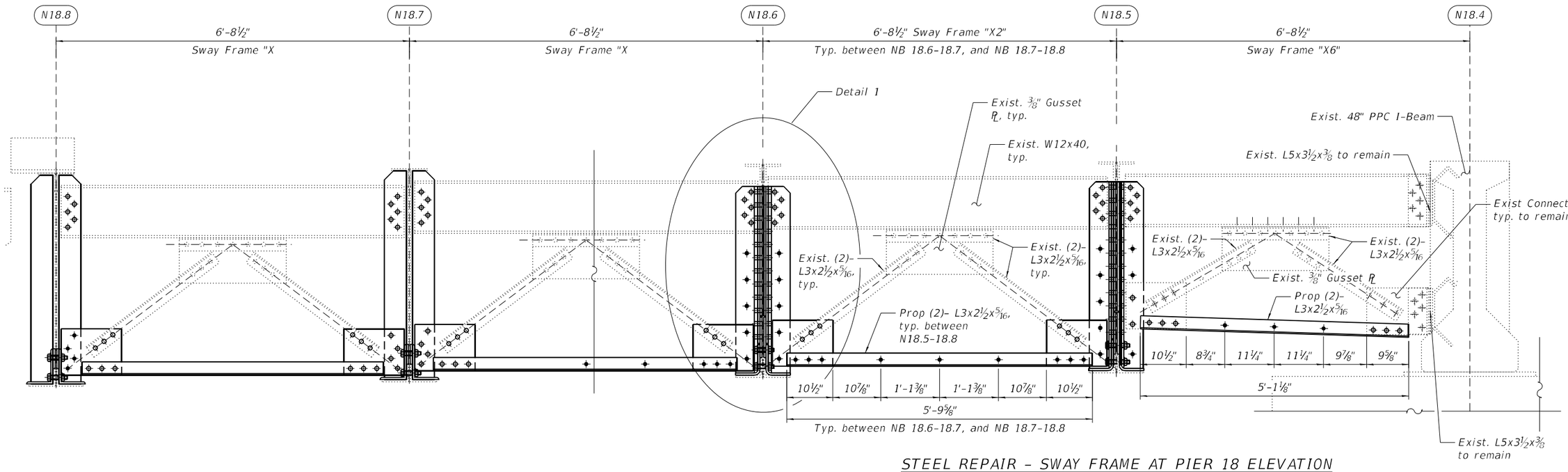

STEEL REPAIR - SWAY FRAME AT PIER 18 ELEVATION

(Looking North)

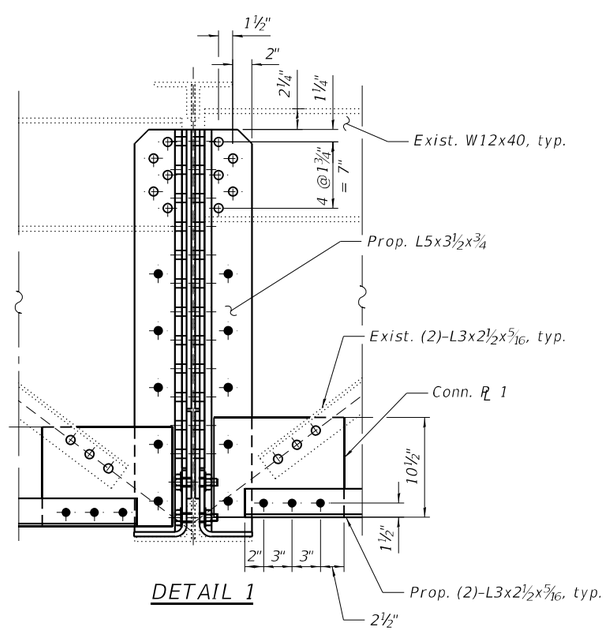

DETAIL 1

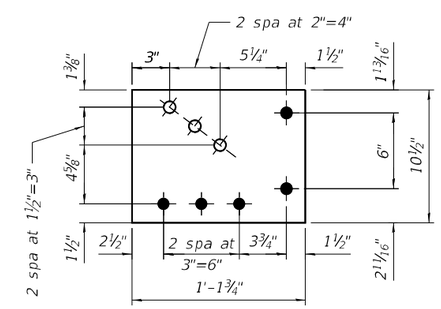

CONNECTION PL 1

(1'-1¾"x10½"x½")

* Field drill holes in new steel using existing steel as a template

** Cope W12x40 top and bottom flange

BILL OF MATERIAL

ITEM	UNIT	QUANTITY
Structural Steel Repair	Pound	470

NOTES:

1. For Beam end repairs at N18.5 thru N18.8, see Sheets S03A-088 thru S03A-093.

LEGEND

- Field drill holes in new steel using existing steel as a template
- Shop drill holes in new steel. Use new steel as template to field drill holes in existing steel.

MODEL: Default
FILE NAME: P:\2004825 PTB195-014 HBM\WO#7 I-90 Various Overlays\Ashland Ave\Sheet Files\0160133-62K73-S93-Structural Steel Repairs 12.dgn

HBM ENGINEERING GROUP, LLC

USER NAME =	DESIGNED - LAB	REVISED -
	CHECKED - MI	REVISED -
PLOT SCALE =	DRAWN - LAB	REVISED -
PLOT DATE =	DATE - 4/29/2024	REVISED -

STATE OF ILLINOIS
DEPARTMENT OF TRANSPORTATION

STRUCTURAL STEEL REPAIRS AT SWAY FRAME (PIER 18)
STRUCTURE NO. 016-0133 (NB)

SHEET S03A-114 OF S03A-148 SHEETS

F.A.I. RTE.	SECTION	COUNTY	TOTAL SHEETS	SHEET NO.
90/94	2020-005-BR	COOK	908	442

CONTRACT NO. 62K73

ILLINOIS FED. AID PROJECT

4/30/2024 3:23:07 PM

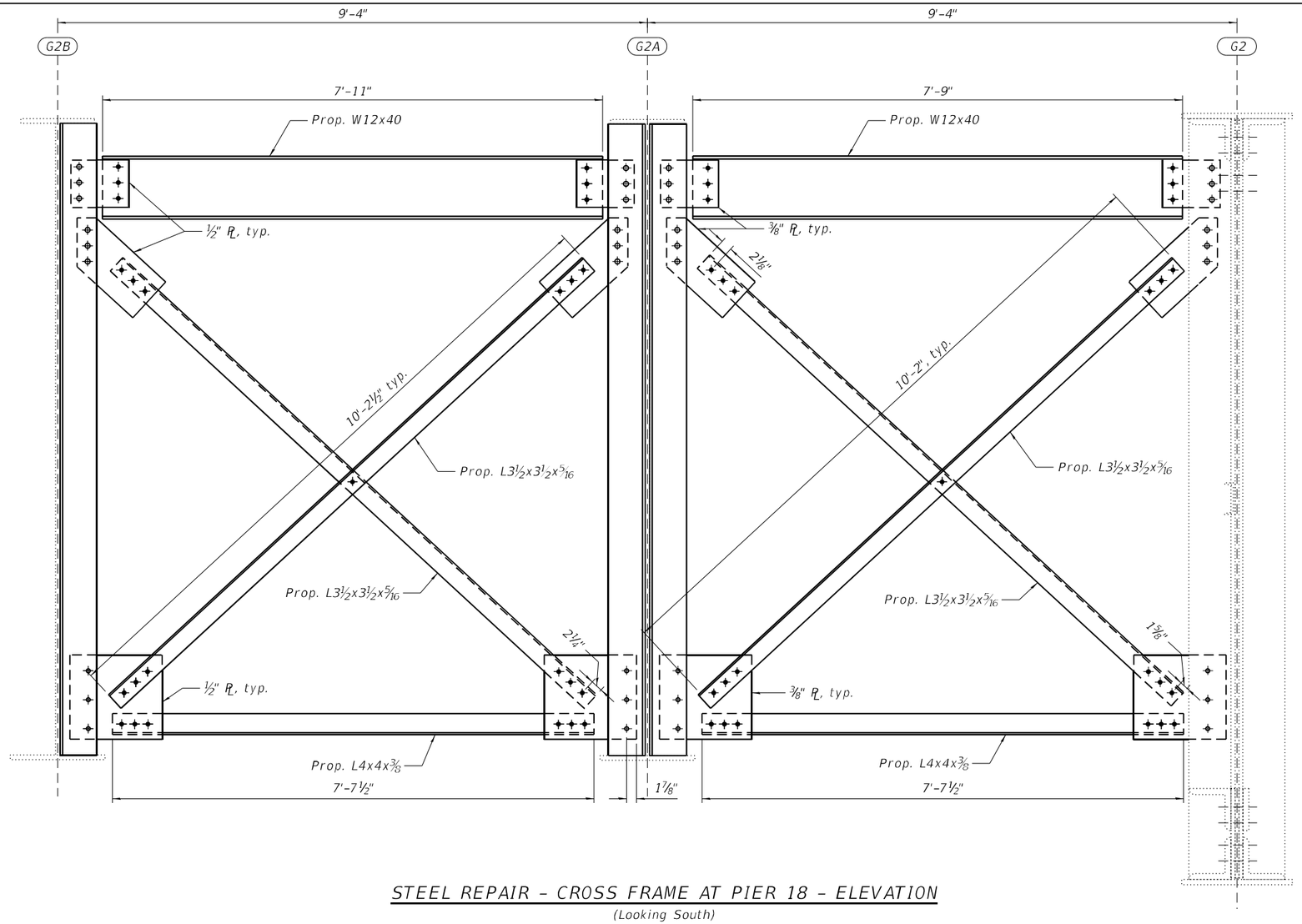

STEEL REPAIR - CROSS FRAME AT PIER 18 - ELEVATION

(Looking South)

* 2⅛" at G2A West Face
** 2¼" at G2A East Face; 1⅝" at G2 East Face
*** 1⅞" at G2A East Face

NOTE:

1. For Girder G2, G2A and G2B repairs, see Sheets S03A-107 and S03A-108.

BILL OF MATERIAL

ITEM	UNIT	QUANTITY
Structural Steel Repair	Pound	1,500

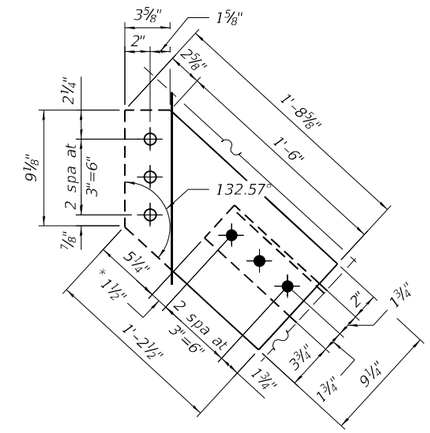

TOP ANGLE CONNECTION PLATE

(9¼"x1'-8⅝"x½" PL)

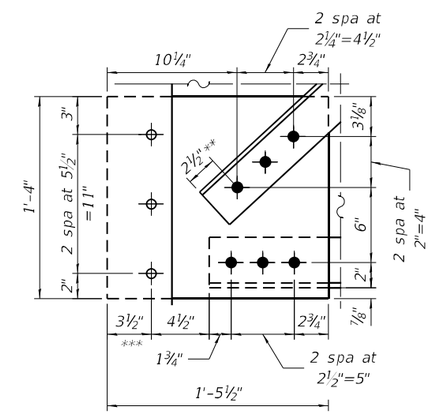

BOTTOM ANGLE CONNECTION PLATE

(1'-4"x1'-5½"x½" PL)

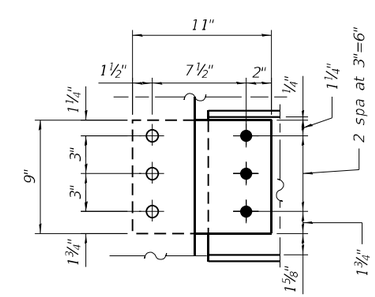

W12x40 CONNECTION PLATE

(1'-4"x1'-5½"x½" PL)

LEGEND

- Field drill holes in new steel using existing steel as a template
- Shop drill holes in new steel. Use new steel as template to field drill holes in existing steel.

MODEL: Default
FILE NAME: P:\2004-825 PTB195-014 HBMWO#7 I-90 Various Overlays\Ashland Ave\Sheet Files\0160133-62K73-S94-Structural Steel Repairs 13.dgn
4/30/2024 3:23:12 PM

HBM ENGINEERING GROUP, LLC

USER NAME =	DESIGNED - LAB	REVISED -
	CHECKED - MI	REVISED -
PLOT SCALE =	DRAWN - LAB	REVISED -
PLOT DATE =	DATE - 4/29/2024	REVISED -

STATE OF ILLINOIS
DEPARTMENT OF TRANSPORTATION

STRUCTURAL STEEL REPAIRS AT CROSS-FRAME (PIER 18)
STRUCTURE NO. 016-0133 (NB)

SHEET S03A-115 OF S03A-148 SHEETS

F.A.I. RTE.	SECTION	COUNTY	TOTAL SHEETS	SHEET NO.
90/94	2020-005-BR	COOK	908	443
		CONTRACT NO. 62K73		
		ILLINOIS FED. AID PROJECT		

ROUTE NO.	SECTION	COUNTY	TOTAL SHEETS	SHEET NO.
FAI 2	05053-1H	COOK	136	36
STA.		TO STA.		
FED. ROAD DIST. NO. 4	ILLINOIS		PROJECT	I-90-2(61)

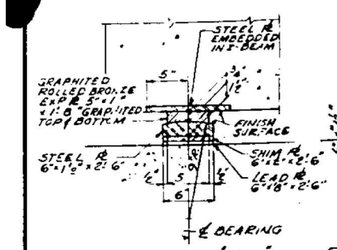

SECTION "W-W"

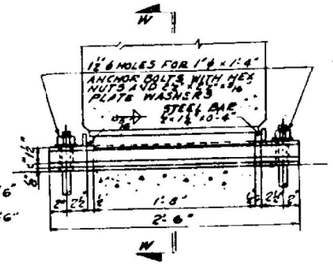

EXPANSION BEARING "B1"

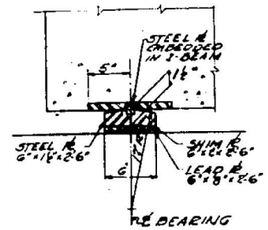

SECTION "X-X"

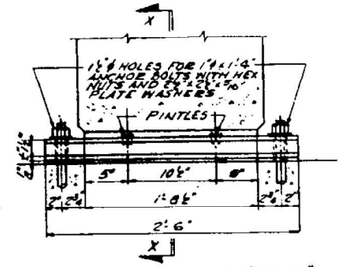

FIXED BEARING "B2"

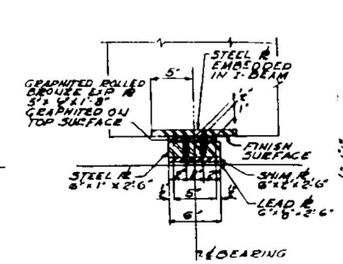

SECTION "Y-Y"

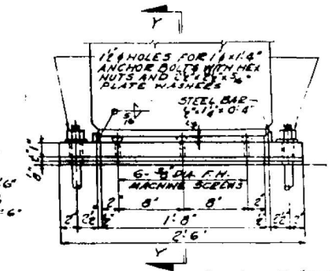

EXPANSION BEARING "B3"

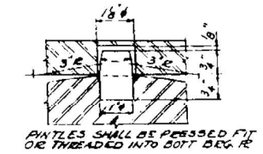

PINTLES SHALL BE PRESSED FIT OR THREADED INTO BOTT. BRG. ℄

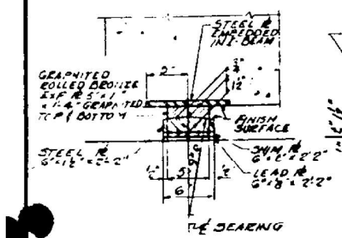

SECTION U-U

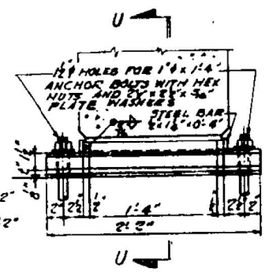

EXPANSION BEARING "B5"

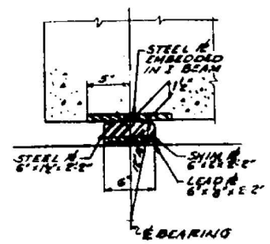

SECTION V-V

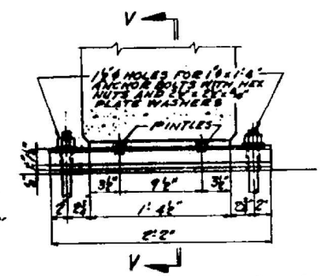

FIXED BEARING "B6"

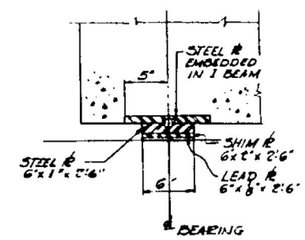

SECTION Z-Z

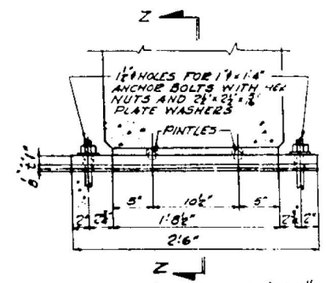

FIXED BEARING "B4"

NOTE!
SHIMPLATES TO BE USED ONLY WHEN REQUIRED. SEE FRAMING PLANS FOR LOCATION AND THICKNESS OF SHIMPLATES.

SUPPLEMENTARY I-BEAM DATA

MARK	BRG. TYPE NO.	BRG. TYPE SO.	END OVERHANG NORTH	END OVERHANG SOUTH	END BLOCK LGTH NORTH	END BLOCK LGTH SOUTH	LOCATION OF ADJ. BOLTS NORTH	LOCATION OF ADJ. BOLTS SOUTH	REMARKS
CB2A	B1	B2							
CB2B, CB2C	B2	B1							
CB3A	B1	B2							
CB3B	B2	B1							
CB5A, CB5B	B1	B2							
CB5C	B1	B2							
CB5D, CB5E	B2	B1							
CB5F	B2	B1							
CB7			13 1/2"	10"	3'-4 1/2"	3'-1"			
CB8							3"	3"	
CB9							3"	3"	
CB10							3"	3"	
CB11							3"	3"	
CB12							3"	3"	
CB13							3"	3"	
CB14							3"	3"	
CB15							3"	3"	
CB31			13 1/2"	10"	3'-4"	3'-0 1/2"			
CB32			10"	13 1/2"	3'-0 1/2"	3'-4"			
CB33			10"	13 1/2"	3'-2"	3'-2 1/2"			
CB34							3"	3"	
CB36F, CB36G							3"	3"	
CB36H							3"	3"	
CB60			10"	2'-2 1/2"	3'-4 1/2"	5'-4 1/2"			
CB61			2'-0 1/2"	10"	5'-4 1/2"	3'-4 1/2"			
CB70D, CB70E							3"	3"	
CB81			15"	10"	3'-4 1/2"	2'-11 1/2"			
CB82			15"	10"	3'-6"	3'-1"			
CB100			16 1/2"	13"	3'-8"	3'-4 1/2"			
CB127			16 1/2"	16"	3'-9 1/2"	3'-8"			
CB128			10"	16 1/2"	3'-4 1/2"	3'-8"			
CB145			10"	16 1/2"	3'-0 1/2"	3'-7"			

NOTE!
ALL DIMENSIONS OR DETAILS NOT SHOWN ARE SAME AS SHOWN IN CONCRETE T-BEAM SCHEDULE FOR BEAM OF SAME NUMBER

SCALE OF TRACING
1 1/2" = 1'-0"
0 3" 6" 9" 1' 2' 3'

ALFRED BENESCH & ASSOCIATES
CONSULTING ENGINEERS
CHICAGO, ILLINOIS

CITY OF CHICAGO
DEPARTMENT OF PUBLIC WORKS
BUREAU OF ENGINEERING
NORTHWEST ROUTE SUPERHIGHWAY
GRADE SEPARATION
WABANSIA AVE. TO CORTLAND ST.
SECTION 0806.3-1H
BEARING DETAILS
SHEET NO. 36 OF 136 SHEETS DATE:

FOR INFORMATION ONLY

NOTE:
1. For bearing point notes, see Sheet S03A-058.

MODEL: Default
FILE NAME: P:\2004-825 PTB195-014 HBM\WO#7 I-90 Various Overlays\Ashland Ave\Sheet Files\0160133-62K73-S95-Paint Bearings1.dgn
4/30/2024 3:23:13 PM

HBM ENGINEERING GROUP, LLC

USER NAME =	DESIGNED - LAB	REVISED -
	CHECKED - MI	REVISED -
PLOT SCALE =	DRAWN - LAB	REVISED -
PLOT DATE =	DATE - 4/29/2024	REVISED -

STATE OF ILLINOIS
DEPARTMENT OF TRANSPORTATION

CLEANING AND PAINTING EXISTING BEARINGS (SHEET 1 OF 6)
STRUCTURE NO. 016-0133 (NB)
SHEET S03A-116 OF S03A-148 SHEETS

F.A.I. RTE.	SECTION	COUNTY	TOTAL SHEETS	SHEET NO.
90/94	2020-005-BR	COOK	908	444
		CONTRACT NO. 62K73		
		ILLINOIS	FED. AID PROJECT	

ROUTE NO	SECTION	COUNTY	TOTAL SHEETS	SHEET NO
F.A.I. 94	1976-135 BR	COOK	FEDERAL AID PROJECT NO	
FED. ROAD DIST. NO. 7	ILLINOIS			

SHEET NO. 5 OF 26 SHEETS

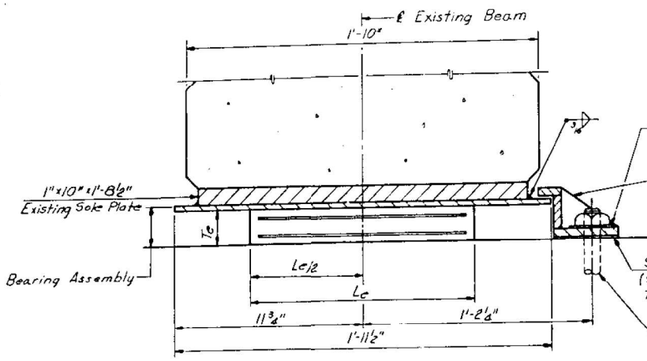

BEARINGS UNDER 48" PPC. I-BEAMS

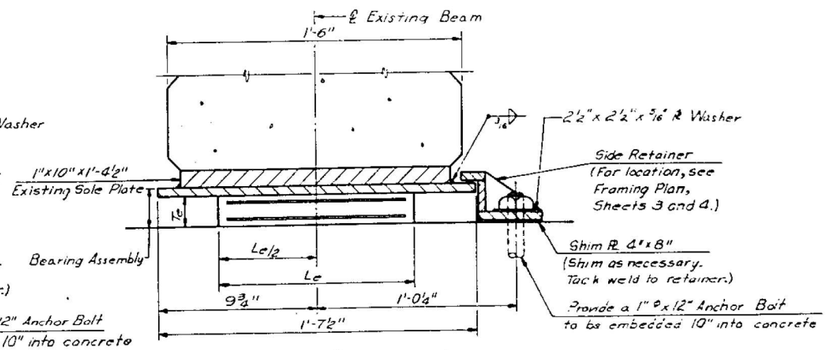

BEARINGS UNDER 36" PPC. I-BEAMS

SECTION A-A

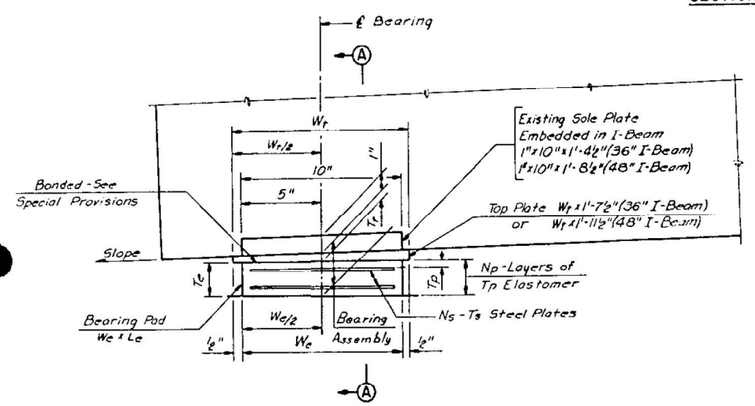

SIDE VIEW

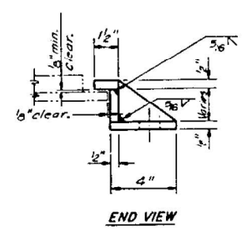

END VIEW

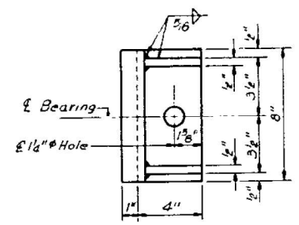

PLAN VIEW

SIDE RETAINER

Note:
Cost of side retainers, complete and in place, including anchor bolts, nuts and washers shall be incidental to Furnishing and Installing Elastomeric Bearings, Type I.

TABLE OF DIMENSIONS - TYPE I
ELASTOMERIC EXPANSION BEARINGS

We	Le	Series	Tp	Np	Ts	Ns	Te
7"	12"	a	3/8"	3	3/32"	2	1 3/8"
8"	15"	a	3/8"	4	1/8"	3	1 7/8"
9"	12"	a	3/8"	3	3/32"	2	1 3/8"
9"	12"	b	3/8"	4	3/32"	3	1 13/16"
10"	14"	a	3/8"	3	1/8"	2	1 3/8"
10"	14"	b	3/8"	4	1/8"	3	1 7/8"
10"	14"	c	3/8"	4	1/8"	3	2 1/8"
10"	14"	d	3/8"	5	1/8"	4	2 3/8"
10"	14"	e	3/8"	6	1/8"	5	2 5/8"

Tp denotes thickness of each elastomeric layer.
Np denotes number of elastomeric layers.
Ts denotes thickness of each steel plate.
Ns denotes number of steel plates.

Notes:
Work this sheet with sheet no. 6.
All existing anchor bolts shall be cut at concrete surface.
Top plate shall be placed such that the bottom of the plate is level.
The replacement bearings shown on this sheet are Type I Elastomeric Bearings.

STATE OF ILLINOIS
DEPARTMENT OF TRANSPORTATION

ELASTOMERIC EXPANSION
REPLACEMENT BEARINGS
UNDER CONCRETE I-BEAMS

JOHN F. KENNEDY EXPRESSWAY
W. WABANSIA AVENUE TO
W. CORTLAND STREET

NO.	DATE	REVISION	BY

HOWARD, NEEDLES, TAMMEN, & BERGENDOFF
CONSULTING ENGINEERS CHICAGO
HNTB
MADE P.C.A. DATE 1-14-77 CHECKED Rel DATE 3-15-77

FOR INFORMATION ONLY

NOTE:
1. For bearing point notes, see Sheet S03A-058.

HBM ENGINEERING GROUP, LLC

USER NAME =	DESIGNED - LAB	REVISED -
	CHECKED - MI	REVISED -
PLOT SCALE =	DRAWN - LAB	REVISED -
PLOT DATE =	DATE - 4/29/2024	REVISED -

STATE OF ILLINOIS
DEPARTMENT OF TRANSPORTATION

CLEANING AND PAINTING EXISTING BEARINGS (SHEET 2 OF 6)
STRUCTURE NO. 016-0133 (NB)
SHEET S03A-117 OF S03A-148 SHEETS

F.A.I. RTE.	SECTION	COUNTY	TOTAL SHEETS	SHEET NO.
90/94	2020-005-BR	COOK	908	445
		CONTRACT NO. 62K73		
		ILLINOIS	FED. AID PROJECT	

MODEL: Default
FILE NAME: P:\2004-825 PTB 195-014 HBM\WO#7 I-90 Various Overlays\Ashland Ave\Sheet Files\0160133-62K73-S96-Paint Bearings2.dgn
4/30/2024 3:23:22 PM

ROUTE NO.	SECTION	COUNTY	TOTAL SHEETS	SHEET NO.
F.A.I. 94	1976-135 BR	COOK	FEDERAL AID PROJECT NO	
FED. ROAD DIST. NO. 7	ILLINOIS			

SHEET NO 6 OF 26 SHEETS

PIER	BEAM	W_B	L_B	SERIES	TOP PLATE Tt	TOP PLATE Wt	TOP PLATE SLOPE	NO. REQ'D.	REMARKS
1(S)	1-32,34,36,37	10"	14"	b	1/2"	11"	2.5%	35	②
	33,35	10"	14"	d	3/8"	11"	2.5%	2	
1(N)	1-35	10"	14"	c	1"	11"	3.6%	35	①
3(S)	1-29, 31-33	10"	14"	b	1/2"	11"	2.1%	31	②
	29	10"	14"	d	1 1/8"	11"	2.1%	1	
	30	10"	14"	d	1 11/16"	11"	2.1%	1	
3(N)	1-28, 30-32	10"	14"	c	7/8"	11"	2.0%	31	①
	29	10"	14"	d	1 3/8"	11"	2.0%	1	
5(S)	1-3, 6-32	10"	14"	b	1/2"	11"	1.6%	30	②
	4	10"	14"	c	3/8"	11"	1.6%	1	①
	5	10"	14"	d	1 1/8"	11"	1.6%	1	
5(N)	1,5,8-15, 17-24,27-31	10"	14"	b	1/2"	11"	2.2%	23	②
	3,6,26	10"	14"	c	1/2"	11"	2.2%	5	①
	2	10"	14"	c	3/8"	11"	2.2%	1	①
	4	10"	14"	d	1 1/8"	11"	2.2%	1	
	16	10"	14"	c	7/8"	11"	2.2%	1	①
7(S)	1-31	10"	14"	b	1/2"	11"	0.0%	31	②
7(N)	1-5,8-15, 17-24,27-31	10"	14"	b	1/2"	11"	1.3%	26	②
	16	10"	14"	c	3/8"	11"	1.3%	1	①
	6,7,25,26	10"	14"	c	3/4"	11"	1.3%	4	①
9(S)	17-21,23,24	9"	12"	a	3/4"	10"	0.0%	7	
	22	9"	12"	a	5/8"	10"	0.0%	1	
10(S)	1	9"	12"	a	3/4"	10"	0.0%	1	
	2	9"	12"	a	5/8"	10"	0.0%	1	①
	3-12, 19-25	10"	14"	c	1/4"	11"	0.0%	17	
	13-16	10"	14"	c	1/4"	11"	0.0%	4	①
	17,18	10"	14"	a	1/4"	11"	0.0%	2	①

N1.4-N1.10, N1.13-N1.17
N2.4-N2.10, N2.-13-N2.17
N3.4-N3.9, N3.12-N3.16
N4.4-N4.9, N4.12-N4.16
N5.4-N5.6, N5.9, N5.12-N5.16
N5.7
N5.8
N6.4, N6.8, N6.11-N6.15
N6.6
N6.5
N6.7
N7.4-N7.8, N7.11-N7.15
N8.4-N8.8, N8.11-N8.15
N10.4
N10.5
N10.6, N10.9-N10.12

PIER	BEAM	W_B	L_B	SERIES	TOP PLATE Tt	TOP PLATE Wt	TOP PLATE SLOPE	NO. REQ'D.	REMARKS
10(N)	1-36	9"	12"	b	5/8"	10"	0.0%	36	
12(S)	1-7	10"	14"	c	1/2"	11"	0.0%	7	
	8,9	9"	12"	a	5/8"	10"	0.0%	2	①
13(S)	1,4,6,9	9"	12"	a	1/2"	10"	0.0%	4	
	2,8	9"	12"	a	1 1/4"	10"	0.0%	2	
	3,7,21-23	9"	12"	a	5/8"	10"	0.0%	5	
	19,20	9"	12"	a	3/4"	10"	0.0%	2	①
	10	10"	14"	c	1/2"	11"	0.0%	1	①
	11-18	10"	14"	c	1/2"	11"	0.0%	8	
13(N)	1-21	10"	14"	b	1/2"	11"	0.0%	21	②
15(S)	1-4,6-15	10"	14"	b	1/2"	11"	1.6%	15	②
	5	10"	14"	c	3/8"	11"	1.6%	1	
15(N)	1-10	10"	14"	b	1/2"	11"	0.8%	10	②
16(N)	1,2,4-6, W.Fascia	10"	14"	b	1/2"	11"	1.2%	6	②
	3	10"	14"	c	3/8"	11"	1.1%	1	①
18(S)	1-6	10"	14"	b	1/2"	11"	2.8%	6	
	E.Fascia	8"	15"	a	1/2"	9"	2.5%	1	
19(S)	4,5,8,9,13	10"	14"	b	1/2"	11"	3.2%	5	②
	1-3,6,7, 10,11,14	10"	14"	c	3/8"	11"	3.2%	8	
	12	10"	14"	c	3/4"	11"	3.2%	1	
19(N)	3,6-17	10"	14"	b	1/2"	11"	2.7%	13	
	1,5	10"	14"	b	1"	11"	2.7%	2	
	2,4	10"	14"	b	1 1/4"	11"	2.7%	2	

N11.5-N11.10, N11.13-N11.18
N12.4-N12.7, N12.10
N12.11, N12.12
N13.4, N13.9
N13.5, N13.11
N13.6, N13.10
N14.4-N14.7, N14.10-N14.13
N15.4-N15.7, N15.10-N15.13
N16.4-N16.7, N16.10-N16.13
N17.4-N17.5, N17.7-N17.8
N17.6
N18.4

PIER	BEAM	W_B	L_B	SERIES	TOP PLATE Tt	TOP PLATE Wt	TOP PLATE SLOPE	NO. REQ'D.	REMARKS
21(S)	2,3-20,22	10"	14"	b	5/8"	11"	3.5%	20	
	1	10"	14"	b	1"	11"	3.6%	1	
	21	10"	14"	b	1/2"	11"	3.6%	1	
21(N)	1-3,6-8,11-20	10"	14"	b	1/2"	11"	2.7%	24	
	4,5	10"	14"	b	5/8"	11"	2.7%	2	
	9,10	10"	14"	b	1/2"	11"	2.7%	2	②
22(N)	11-16	7"	12"	a	1 1/4"	8"	3.3%	6	
	17-20	9"	12"	b	5/8"	10"	2.9%	4	
	21-23	10"	14"	b	1/2"	11"	2.7%	3	
	24-28	10"	14"	b	1/2"	11"	2.6%	5	②
24(S)	1,5	10"	14"	c	3/8"	11"	3.7%	2	①
	2	10"	14"	c	5/8"	11"	3.7%	1	①
	3,9,13,17	10"	14"	c	1"	11"	3.8%	4	①
	4,10,16	10"	14"	d	3/8"	11"	3.4%	3	
	6	10"	14"	d	5/8"	11"	3.8%	1	
	7,8,11,12, 14,15,18	10"	14"	b	1/2"	11"	3.5%	7	②
	19	10"	14"	c	3/8"	11"	3.5%		①
	20-23,26,27, 29,30,33,35, 38,39,41-43	10"	14"	c	1/2"	11"	3.4%	15	②③
	24,25	10"	14"	c	1"	11"	3.8%	2	②
	28	10"	14"	e	5/8"	11"	3.7%	1	②
	31	10"	14"	e	1"	11"	3.6%	1	
	32,34,36,44	10"	14"	c	3/8"	11"	3.7%	4	②
	37	10"	14"	e	5/8"	11"	3.6%	1	
	40	10"	14"	c	1/2"	11"	3.6%	1	
24(N)	1-7	9"	12"	b	1/2"	11"	2.4%	7	
	8-11	10"	14"	b	5/8"	11"	2.3%	4	
	12-16	10"	14"	b	1/2"	11"	2.2%	5	
	17,22,24-26	10"	14"	b	1/2"	11"	2.0%	9	
	23	10"	14"	b	1 3/8"	11"	2.0%	1	
	27	10"	14"	b	1 1/4"	11"	1.6%	1	
	28	10"	14"	b	1/2"	11"	2.5%	1	
	29	10"	14"	b	1 1/8"	11"	2.6%	1	
	30	10"	14"	b	7/8"	11"	2.7%		
	31-32	10"	14"	b	1/2"	11"	3.0%	2	

N21.6-N21.9
N23.1-N23.3, N23.7-N23.8
N23.4
N23.9-N23.10
N24.3, N24.7
N24.4
N24.5, N24.15
N24.6, N24.18
N24.8
N24.9-N24.10, N24.13-N24.14, N24.16-N24.17
N25.2-N25.4, N25.7-N25.8
N25.11-N25.12
N25.13-N25.14

Remarks:

① The air temperature at time of setting the elastomeric bearings shall be between 110°F and -10°F.
② The air temperature at time of setting the elastomeric bearings shall be between 90°F and 10°F.
③ Grind the existing concrete bearing seat by 1/4".

Notes:

It shall be the responsibility of the Contractor to verify all dimensions and conditions existing in the field prior to installation and ordering of materials.

Remove the existing bearing device including base plate, shim plates and lead plate from the beams shown in the charts at the locations shown in the charts prior to installation of new elastomeric bearings unless noted otherwise.

Work this sheet with sheet No.5.

All of the beams shown in the charts are 48" PPC I-Beams except those which are supported by Pier 10(N). These are 36" PPC I-Beams

All of the beams shown in the charts require a Type I Elastomeric Bearing

HOWARD, NEEDLES, TAMMEN, & BERGENDOFF CONSULTING ENGINEERS CHICAGO | HNTB
MADE P.G.A. DATE 1.19.77 CHECKED G.L. DATE 3-15-77

NO.	DATE	REVISION	BY

STATE OF ILLINOIS
DEPARTMENT OF TRANSPORTATION

SCHEDULE FOR REPLACEMENT BEARINGS UNDER CONCRETE I-BEAMS

JOHN F. KENNEDY EXPRESSWAY
W. WABANSIA AVENUE TO
W. CORTLAND STREET

FOR INFORMATION ONLY

NOTE:
1. For bearing point notes, see Sheet S03A-058.

MODEL: Default
FILE NAME: P:\2004-823 PTB195-014 HBM\WO#7 I-90 Various Overlays\Ashland Ave\Sheet Files\0160133-62K73-S97-Paint Bearings3.dgn
4/30/2024 3:23:31 PM

HBM ENGINEERING GROUP, LLC

USER NAME =	DESIGNED - LAB	REVISED -
	CHECKED - MI	REVISED -
PLOT SCALE =	DRAWN - LAB	REVISED -
PLOT DATE =	DATE - 4/29/2024	REVISED -

STATE OF ILLINOIS
DEPARTMENT OF TRANSPORTATION

CLEANING AND PAINTING EXISTING BEARINGS (SHEET 3 OF 6)
STRUCTURE NO. 016-0133 (NB)

SHEET S03A-118 OF S03A-148 SHEETS

F.A.I. RTE.	SECTION	COUNTY	TOTAL SHEETS	SHEET NO.
90/94	2020-005-BR	COOK	908	446
		CONTRACT NO. 62K73		
	ILLINOIS	FED. AID PROJECT		

STATE OF ILLINOIS
DEPARTMENT OF TRANSPORTATION

ROUTE NO.	SEC.	COUNTY	TOTAL SHEETS	SHEET NO.
	*		434	305
F. HW. A. SEC. 4	ILLINOIS	FED. AID PROJECT		

SHEET NO. 44 SHEETS

* 1990-073BY SHEET NO. C227 OF C317

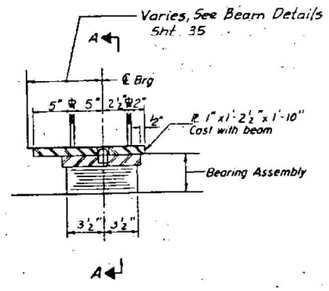

SECTION AT PIER

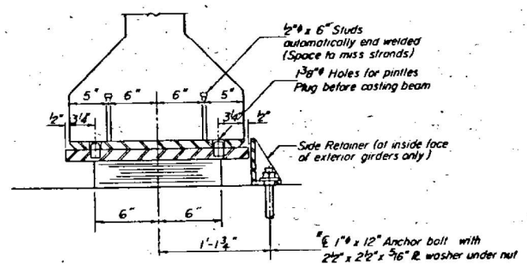

SECTION A-A

TYPE I ELASTOMERIC EXP BRG.
(Size 7-a, See Beam Schedules Sht. 37 & 38 for location)
(8 Required)

*Note. After beams have been erected holes at expansion bearings shall be drilled and anchor bolts grouted in place. See Sheet #B2 for anchor bolt installation.

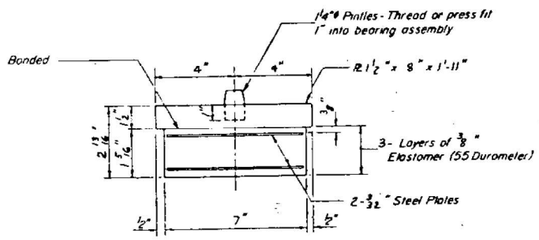

BEARING ASSEMBLY

Note: Shim plates shall not be placed under bearing assembly.

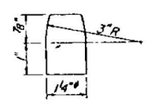

PINTLE

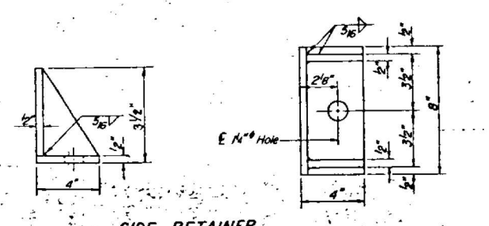

SIDE RETAINER

Equivalent rolled angle with stiffeners will be allowed in lieu of welded plates. (3 Req'd)

BILL OF MATERIAL

Item	Unit	Total
Install Elastomeric Bearing Assembly, Type I (7"x12")	Each	8

FOR ERECTION ONLY - COST INCIDENTAL TO "ERECTING STRUCTURAL STEEL"

STANLEY CONSULTANTS

PI-2E-1 12-31-85

BEARING DETAILS

SECTION
F.A.I. ROUTE 90/94 OVER ASHLAND AVENUE
COOK COUNTY
STATION 409+49

FOR INFORMATION ONLY

NOTE:
1. For bearing point notes, see Sheet S03A-058

HBM ENGINEERING GROUP, LLC

USER NAME =	DESIGNED - LAB	REVISED -
	CHECKED - MI	REVISED -
PLOT SCALE =	DRAWN - LAB	REVISED -
PLOT DATE =	DATE - 4/29/2024	REVISED -

STATE OF ILLINOIS
DEPARTMENT OF TRANSPORTATION

CLEANING AND PAINTING EXISTING BEARINGS (SHEET 4 OF 6)
STRUCTURE NO. 016-0133 (NB)
SHEET S03A-119 OF S03A-148 SHEETS

F.A.I. RTE.	SECTION	COUNTY	TOTAL SHEETS	SHEET NO.
90/94	2020-005-BR	COOK	908	447
		CONTRACT NO. 62K73		
		ILLINOIS	FED. AID PROJECT	

MODEL: Default
FILE NAME: P:\2004-825 PTB195-014 HBM\WO#7 I-90 Various Overlays\Ashland Ave\Sheet Files\0160133-62K73-S98-Paint Bearings4.dgn
4/30/2024 3:23:39 PM

STATE OF ILLINOIS
DEPARTMENT OF TRANSPORTATION

DISTRICT NO.	SECTION	COUNTY	TOTAL SHEETS	SHEET NO.
1	1		434	306

SHEET NO. 45 SHEETS

* 1990-073BY SHEET NO. C22B OF C317

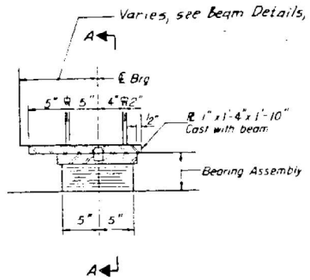

SECTION AT PIERS

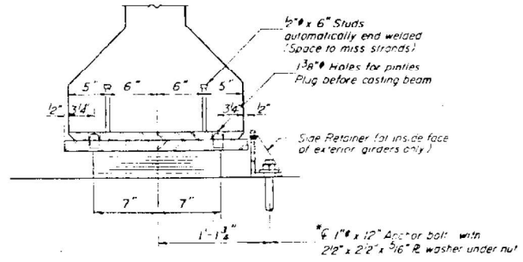

SECTION A-A

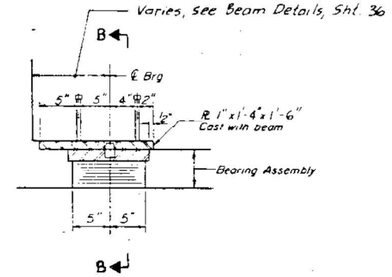

SECTION AT PIER NO. 10

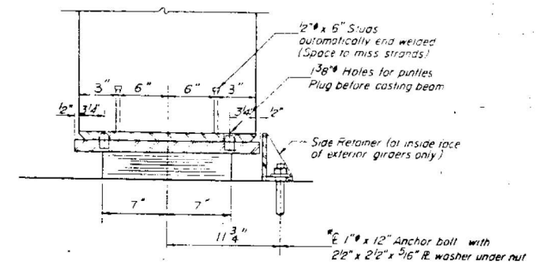

SECTION B-B

TYPE I ELASTOMERIC EXP. BRG.

(Size 10-a, 10-b & 10-c, see Beam Schedules Sht. 31 & 38 for location.)

*Note: After beams have been erected holes at expansion bearings shall be drilled and anchor bolts grouted in place. See Sheet #82 for anchor bolt installation.

*Note: After beams have been erected holes at expansion bearings shall be drilled and anchor bolts grouted in place. See sheet #82 for anchor bolt installation.

TYPE I ELASTOMERIC EXP. BRG.

(Size 10-aa ; Span 11 South End For 18" x 30" Prestressed Beams) (8 Required)

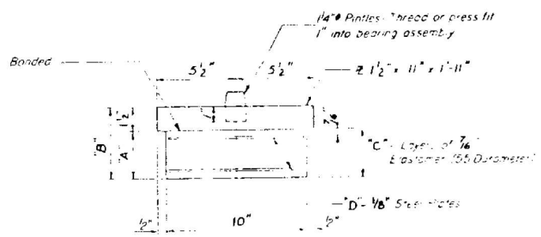

BEARING ASSEMBLY

Note: Shim plates shall not be placed under bearing assembly.

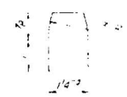

PINTLE

TABLE OF VARIABLES						
Bearing Size	A	B	C	D	E	No Req'd
10-a	2 11/16"	4 3/16"	5	4	5"	57
10-b	3 1/16"	4 3/4"	6	5	5 1/4"	17
10-c	3 9/16"	5 5/16"	7	6	6"	13

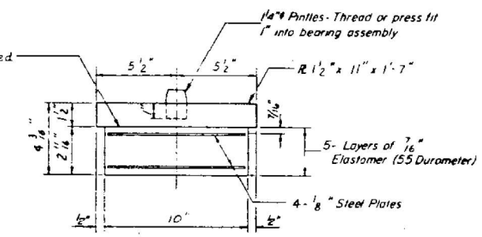

BEARING ASSEMBLY

Note: Shim plates shall not be placed under bearing assembly.

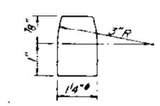

PINTLE

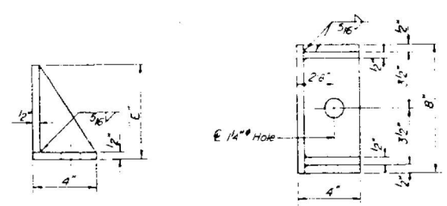

SIDE RETAINER

Equivalent rolled angle with stiffeners will be allowed in lieu of welded plates. (35 Req'd.)

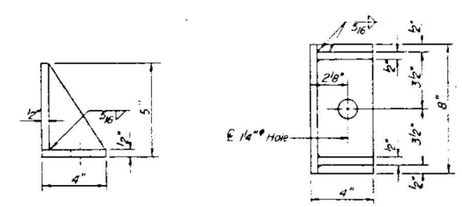

SIDE RETAINER

Equivalent rolled angle with stiffeners will be allowed in lieu of welded plates. (2 Req'd.)

BILL OF MATERIAL

Item	Unit	Total
Install Elastomeric Bearing Assembly, Type I (10" x 14")	Each	95

FOR ERECTION ONLY - COST INCIDENTAL TO "ERECTING STRUCTURAL STEEL"

BEARING DETAILS

SECTION
F.A.I. ROUTE 90/94 OVER ASHLAND AVENUE
COOK COUNTY
STATION 409+49

STANLEY CONSULTANTS

PI-2E-1 12-31-84

FOR INFORMATION ONLY

NOTE:
1. For bearing point notes, see Sheet S03A-058.

HBM ENGINEERING GROUP, LLC

USER NAME =	DESIGNED - LAB	REVISED -
	CHECKED - MI	REVISED -
PLOT SCALE =	DRAWN - LAB	REVISED -
PLOT DATE =	DATE - 4/29/2024	REVISED -

STATE OF ILLINOIS
DEPARTMENT OF TRANSPORTATION

CLEANING AND PAINTING EXISTING BEARINGS (SHEET 5 OF 6)
STRUCTURE NO. 016-0133 (NB)

SHEET S03A-120 OF S03A-148 SHEETS

F.A.I. RTE.	SECTION	COUNTY	TOTAL SHEETS	SHEET NO.
90/94	2020-005-BR	COOK	908	448

CONTRACT NO. 62K73

ILLINOIS | FED. AID PROJECT

MODEL: Default
FILE NAME: P:\2004-825 PTB 195-014 HBM\WO#7 I-90 Various Overlays\Ashland Ave\Sheet Files\0160133-62K73-S99-Paint Bearings5.dgn
4/30/2024 3:23:49 PM

STATE OF ILLINOIS
DEPARTMENT OF TRANSPORTATION

				434	307

SHEET NO. 46 / SHEETS

* 1990-0738Y

SHEET NO. C229 OF C317

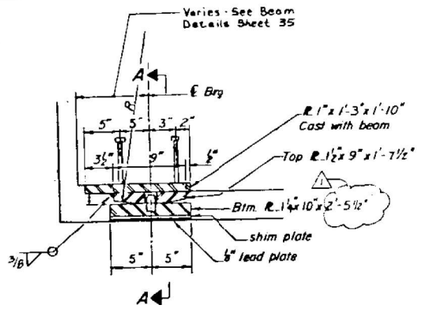

SECTION AT ABUT. OR PIER

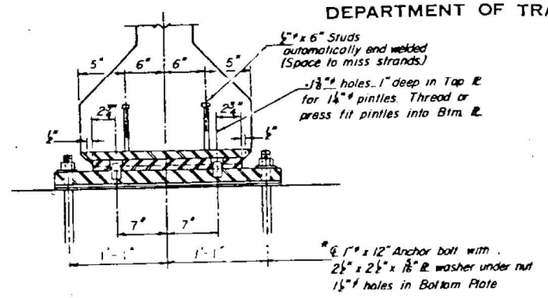

SECTION A-A

* ANCHOR BOLTS SHALL BE DRILLED AND GROUTED IN PLACE AFTER BEAMS HAVE BEEN ERECTED.

See Sheet #82 for anchor bolt installation

FIXED BEARING
(See Beam Schedules, Sht. 37 & 38 for location)
(95 Required)

FIXED 1985 BEARING

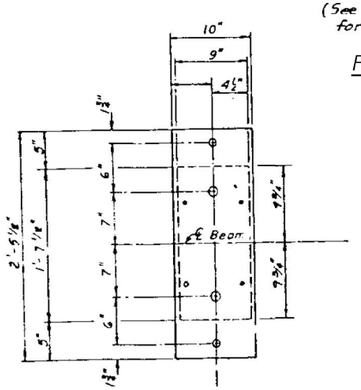

PLAN OF
TOP & BOTTOM PLATES

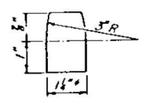

PINTLE
(Typ. Both Bearings)

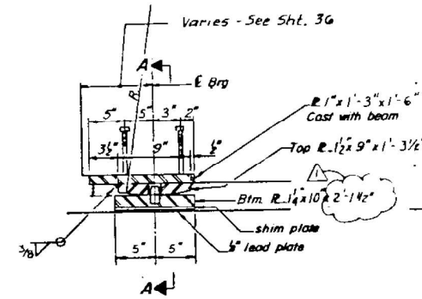

SECTION AT PIER #11

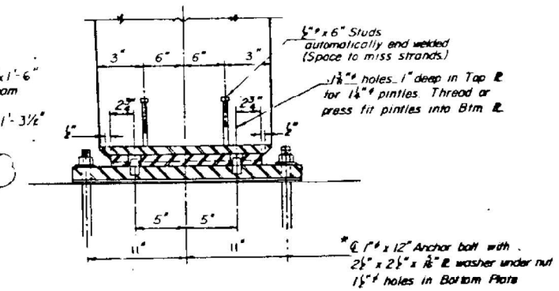

SECTION A-A

*ANCHOR BOLTS SHALL BE DRILLED AND GROUTED IN PLACE AFTER BEAMS HAVE BEEN ERECTED.

See Sheet #82 for anchor bolt installation

FIXED BEARING
(Span 11 North End For 18" x 30" Prestressed Beams)
(8 Required)

FIXED SP 11 N. END BEARING

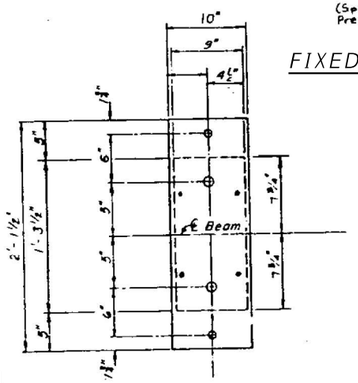

PLAN OF
TOP & BOTTOM PLATES

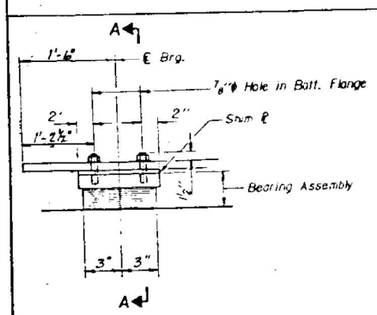

ELEVATION AT PIER

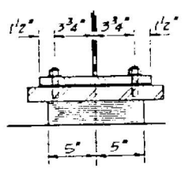

SECTION A-A

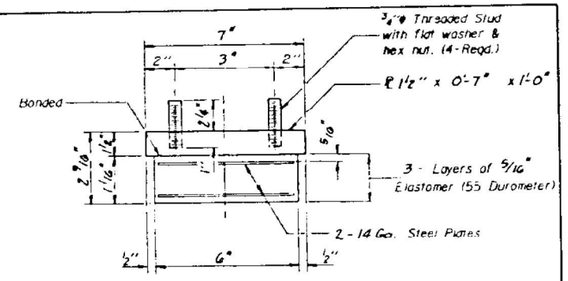

BEARING ASSEMBLY

Note: Shim plates shall not be placed under Bearing Assembly.

TYPE I ELASTOMERIC EXP. BRG.
(BEAM NO. N231 AT PIER 23)
(1 Required)

Item	Unit	Total
Install Elastomeric Bearing Assembly Type I (6" x 10")	Each	1

STANLEY CONSULTANTS

PI-2FB 12-31-85

FOR ERECTION ONLY - COST INCIDENTAL TO "ERECTING STRUCTURAL STEEL"

Rev. 11-26-90

BEARING DETAILS
SECTION:
F.A.I. ROUTE 90/94 OVER ASHLAND AVENUE
COOK COUNTY
STATION 400+48

FOR INFORMATION ONLY

NOTE:
1. For bearing point notes, see Sheet S03A-058.

HBM ENGINEERING GROUP, LLC

USER NAME =	DESIGNED - LAB	REVISED -	
	CHECKED - MI	REVISED -	
PLOT SCALE =	DRAWN - LAB	REVISED -	
PLOT DATE =	DATE - 4/29/2024	REVISED -	

STATE OF ILLINOIS
DEPARTMENT OF TRANSPORTATION

CLEANING AND PAINTING EXISTING BEARINGS (SHEET 6 OF 6)
STRUCTURE NO. 016-0133 (NB)

SHEET S03A-121 OF S03A-148 SHEETS

F.A.I. RTE.	SECTION	COUNTY	TOTAL SHEETS	SHEET NO.
90/94	2020-005-BR	COOK	908	449

CONTRACT NO. 62K73

ILLINOIS | FED. AID PROJECT

MODEL: Default
FILE NAME: P:\2004-825 PTB 195-014 HBM\WO#7 I-90 Various Overlays\Ashland Ave\Sheet Files\016013-62K73-S100-Paint Bearings6.dgn
4/30/2024 3:24:00 PM

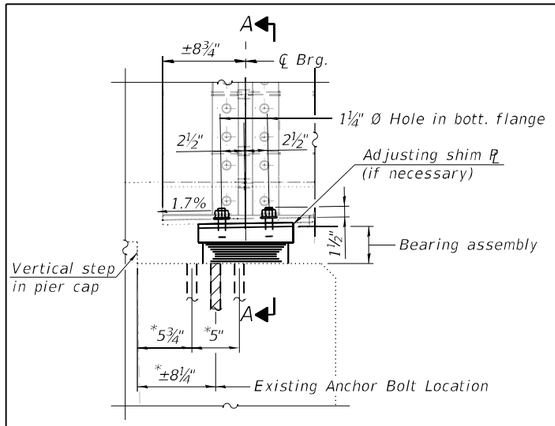

ELEVATION AT CONCRETE PIER CAP

(HS Bolts in stringer, other than those in bearing stiffener, not shown for clarity)

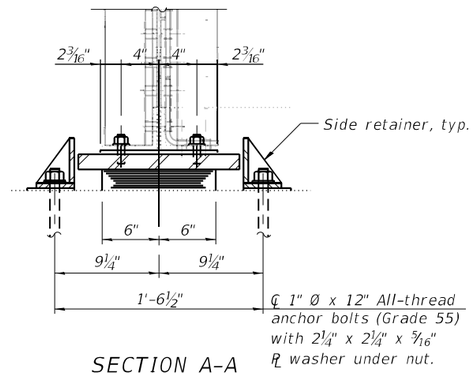

SECTION A-A

TYPE I ELASTOMERIC EXP. BRG.

(N17.10 at Pier 16)

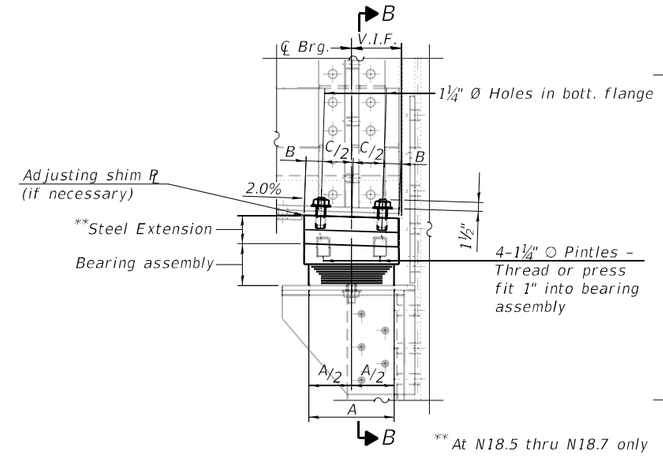

ELEVATION AT STEEL CROSS-GIRDER

(HS Bolts in stringer, other than those in bearing stiffener, not shown for clarity)

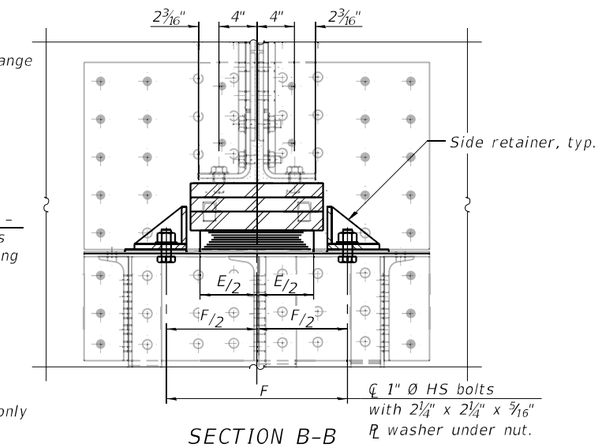

SECTION B-B

TYPE I ELASTOMERIC EXP. BRG.

(N18.5 thru N18.9 and N18.13 at Pier 18)

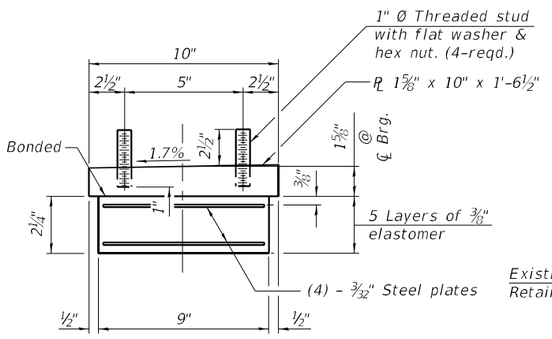

BEARING ASSEMBLY

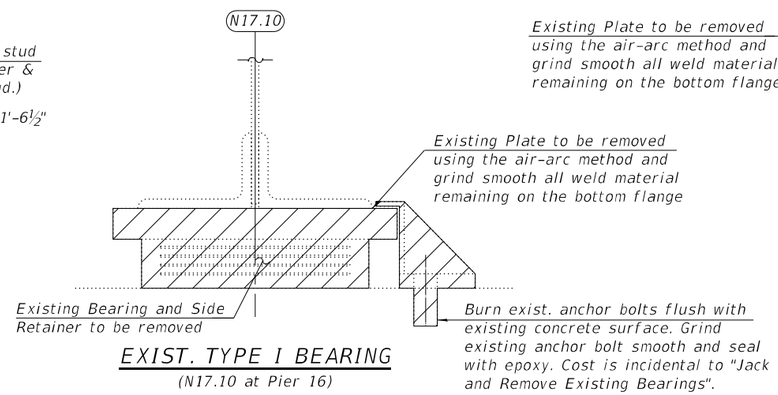

EXIST. TYPE I BEARING

(N17.10 at Pier 16)

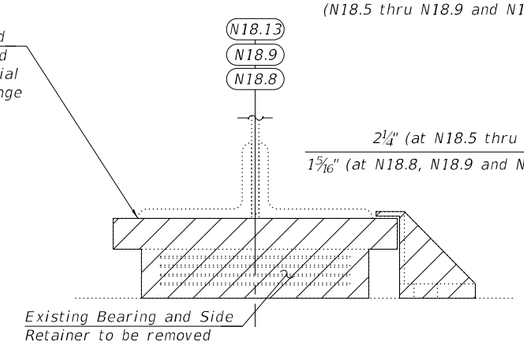

EXIST. TYPE I BEARING

(N18.8, N18.9 and N18.13 at Pier 18)

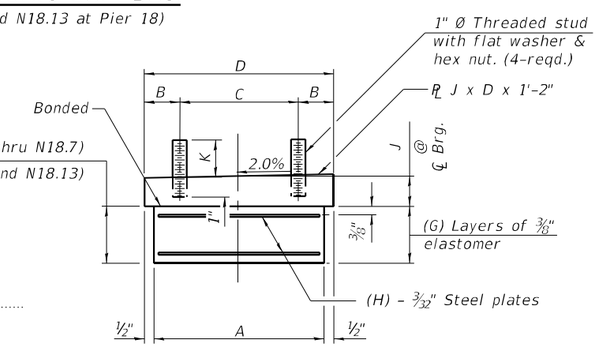

BEARING ASSEMBLY

Note:
Shim plates shall not be placed under bearing assembly.

* The proposed anchor bolts have been located based on the 8¼" distance from ℄ existing anchor bolt to vertical step near ℄ pier (as measured in the field). The Contractor shall locate the existing pier cap main reinforcement using non-destructive methods and confirm acceptability of proposed anchor bolt locations as presented in the plans or propose an alternate location for approval by the Engineer. Such measurements and approvals shall be obtained prior to fabrication of the bearing side retainers.

NOTES:

1. Anchor bolts shall be ASTM F1554 all-thread (or an Engineer-approved alternate material) of the grade(s) and diameter(s) specified. The corresponding grade of AASHTO M314 anchor bolts may be used in lieu of ASTM F1554.
2. Drilled and set anchor bolts shall be installed according to Article 521.06 of the Standard Specifications.
3. Side retainers and other steel members required for the elastomeric bearing assembly shall be included in the cost of Elastomeric Bearing Assembly, Type I.
4. The structural steel plates of the Bearing Assembly shall conform to the requirements of AASHTO M270 Grade 50.
5. Two ⅛ in. adjusting shims shall be provided for each bearing in addition to all other plates or shims and placed as shown on bearing details.
6. Shim plates shall not be placed under bearing assembly.

BEARING DATA TABLE

	Location	
	N18.5 thru N18.7	N18.8, N18.9 and N18.13
A	9"	7"
B	1¾"	1¾"
C	6½"	4½"
D	10"	8"
E	12"	12"
F	18½"	18½"
G	5	3
H	4	2
J	2"	1⅝"
K	5¾"	4¼"

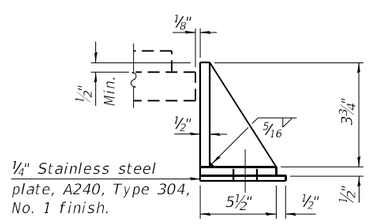

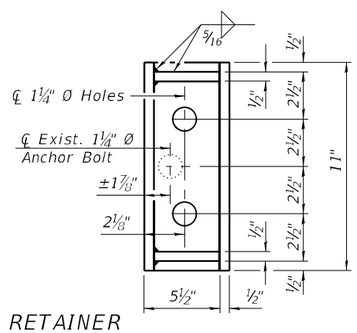

SIDE RETAINER

(N17.10 at Pier 16)

Equivalent rolled angle with stiffeners will be allowed in lieu of welded plates.

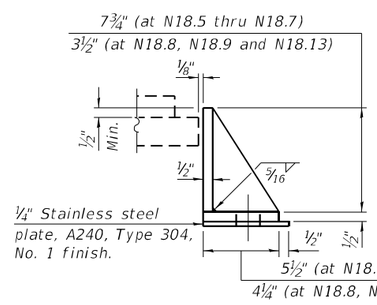

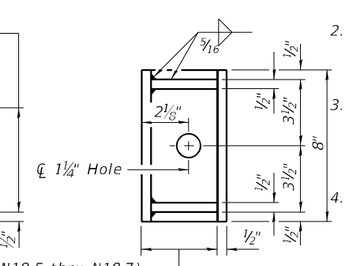

SIDE RETAINER

(N18.5 thru N18.9 and N18.13 at Pier 18)

Equivalent rolled angle with stiffeners will be allowed in lieu of welded plates.

BILL OF MATERIAL

ITEM	UNIT	QUANTITY
Elastomeric Bearing Assembly, Type I	Each	13
Anchor Bolts, 1"	Each	4
Removal Of Existing Bearings	Each	12
Jack And Remove Existing Bearings	Each	1

MODEL: Default
FILE NAME: P:\2004-825 PTB 195-014 HBM\WO#7 I-90 Various Overlays\Ashland Ave\Sheet Files\0160133-62K73-S101a-Elastomeric Bearing (Type I).dgn
4/30/2024 3:24:14 PM

HBM ENGINEERING GROUP, LLC

USER NAME =	DESIGNED - JJS	REVISED -	
	CHECKED - MI	REVISED -	
PLOT SCALE =	DRAWN - JJS	REVISED -	
PLOT DATE =	DATE - 4/29/2024	REVISED -	

STATE OF ILLINOIS
DEPARTMENT OF TRANSPORTATION

ELASTOMERIC BEARING DETAILS (SHEET 1 OF 2)
STRUCTURE NO. 016-0133 (NB)

SHEET S03A-122 OF S03A-148 SHEETS

F.A.I. RTE.	SECTION	COUNTY	TOTAL SHEETS	SHEET NO.
90/94	2020-005-BR	COOK	908	450

CONTRACT NO. 62K73

ILLINOIS | FED. AID PROJECT

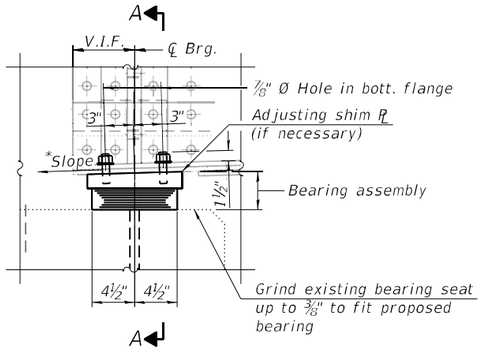

ELEVATION AT ABUT.

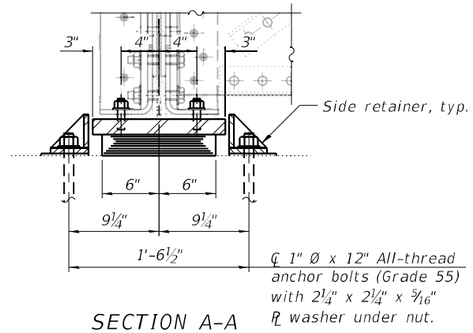

SECTION A-A

*Slope shall be as follows:
2.8% at N20.5
2.9% at N21.1 thru N21.4

TYPE I ELASTOMERIC EXP. BRG.
(N20.5 at Pier 20)
(N21.1 thru N21.4 at Pier 21)

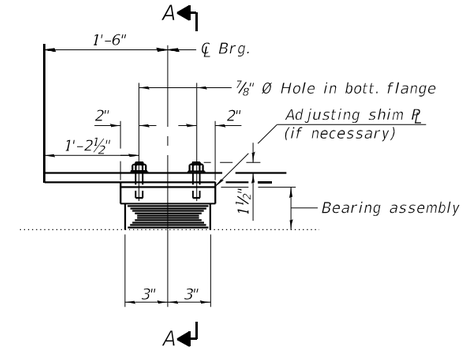

ELEVATION AT ABUT.

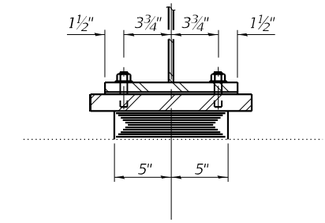

SECTION A-A

TYPE I ELASTOMERIC EXP. BRG.
(N23.1 at Pier 23)

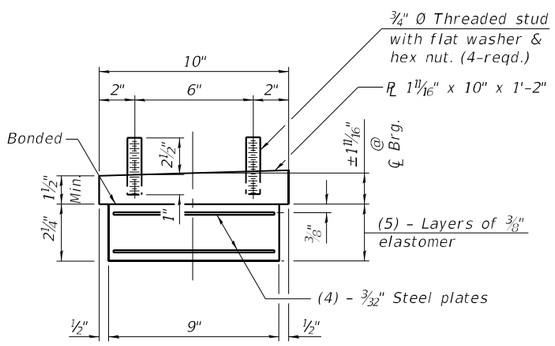

BEARING ASSEMBLY
(N20.5 at Pier 20)
(N21.1 thru N21.4 at Pier 21)

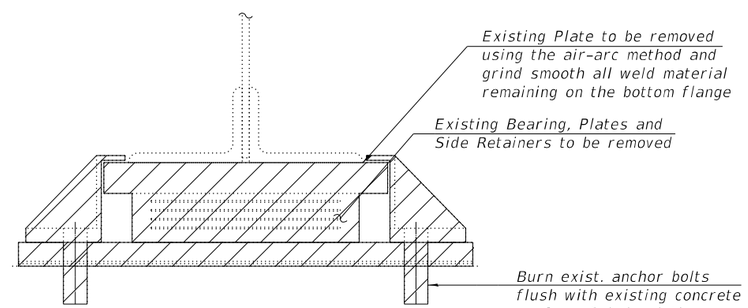

EXIST. TYPE III BEARING
(N20.5 at Pier 20)
(N21.1 thru N21.4 at Pier 21)

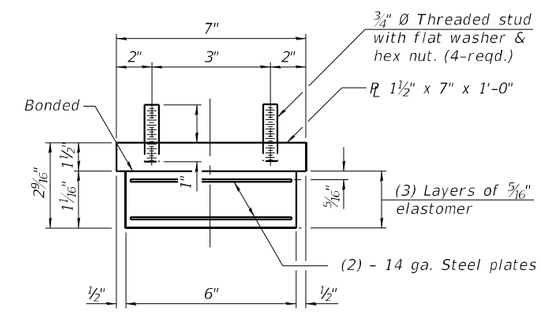

BEARING ASSEMBLY
(N23.1 at Pier 23)

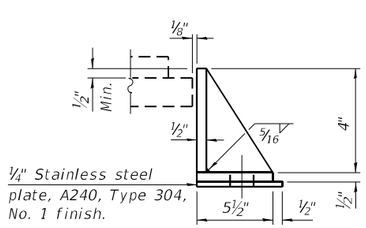

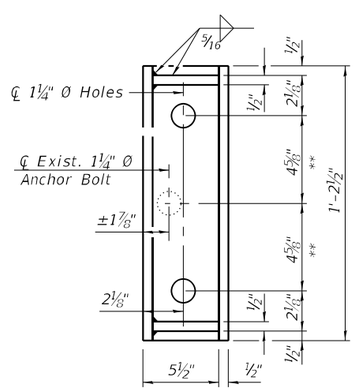

SIDE RETAINER
(N20.5 at Pier 20)
(N21.1 thru N21.4 at Pier 21)

Equivalent rolled angle with stiffeners
will be allowed in lieu of welded plates.

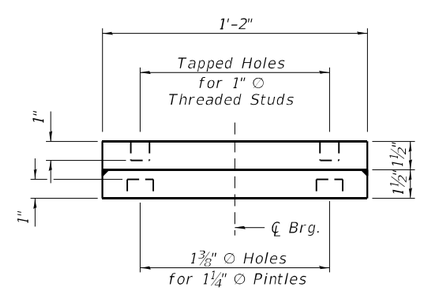

ELEVATION STEEL EXTENSION
(R18.5 thru R18.7)

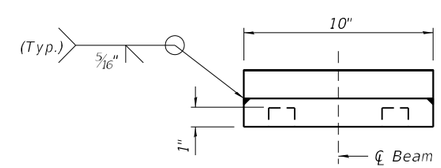

END VIEW STEEL EXTENSION
(R18.5 thru R18.7)

** The proposed anchor bolts have been located to miss existing pier cap main reinforcement per information obtained from existing plans. The Contractor shall locate the existing pier cap main reinforcement using non-destructive methods and confirm acceptability of proposed anchor bolt locations as presented in the plans or propose an alternate location for approval by the Engineer. Such measurements and approvals shall be obtained prior to fabrication of the bearing side retainers.

NOTES:

1. Anchor bolts shall be ASTM F1554 all-thread (or an Engineer-approved alternate material) of the grade(s) and diameter(s) specified. The corresponding grade of AASHTO M314 anchor bolts may be used in lieu of ASTM F1554.
2. Drilled and set anchor bolts shall be installed according to Article 521.06 of the Standard Specifications.
3. Side retainers and other steel members required for the elastomeric bearing assembly shall be included in the cost of Elastomeric Bearing Assembly, Type I.
4. The structural steel plates of the Bearing Assembly shall conform to the requirements of AASHTO M270 Grade 50.
5. Two ⅛ in. adjusting shims shall be provided for each bearing in addition to all other plates or shims and placed as shown on bearing details.
6. Shim plates shall not be placed under bearing assembly.
7. For Bill of Material, see Sheet S03A-122.

BILL OF MATERIAL

ITEM	UNIT	QUANTITY
Anchor Bolts, 1"	Each	36
Concrete Sealer	Sq Ft	412
Epoxy Crack Injection	Foot	7
Structural Repair Of Concrete (Depth Equal To Or Less Than 5 Inches)	Sq Ft	7
Structural Repair Of Concrete (Depth Greater Than 5 Inches)	Sq Ft	36
Temporary Shoring And Cribbing	Each	2

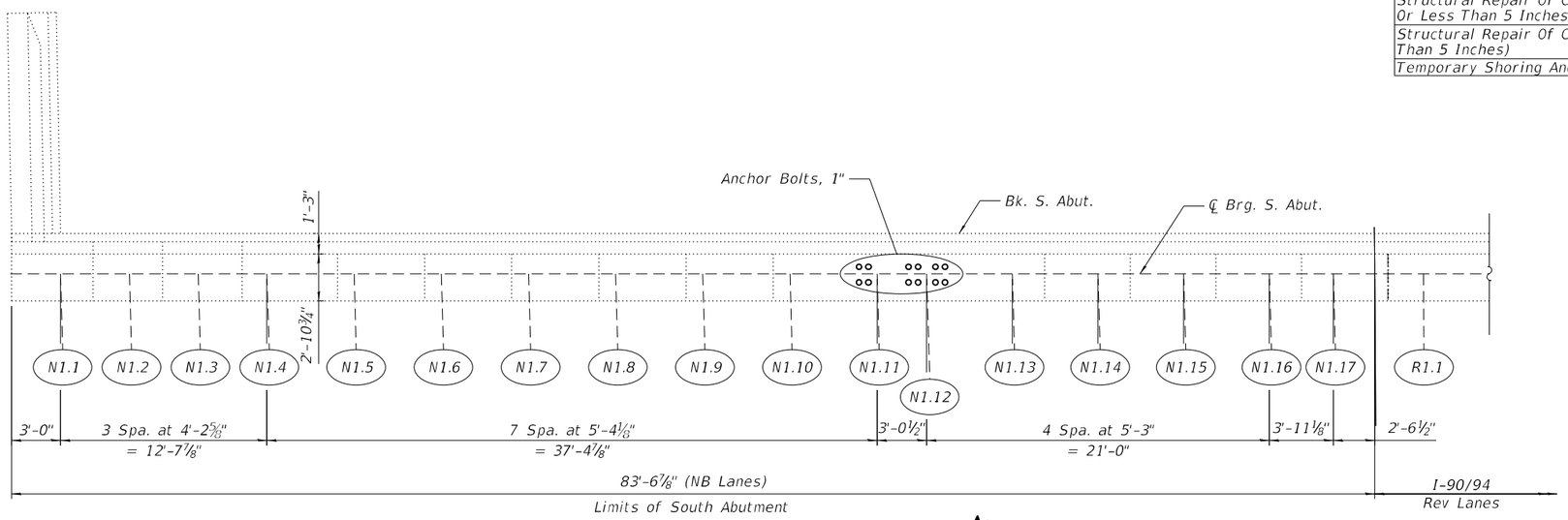

SOUTH ABUTMENT PLAN

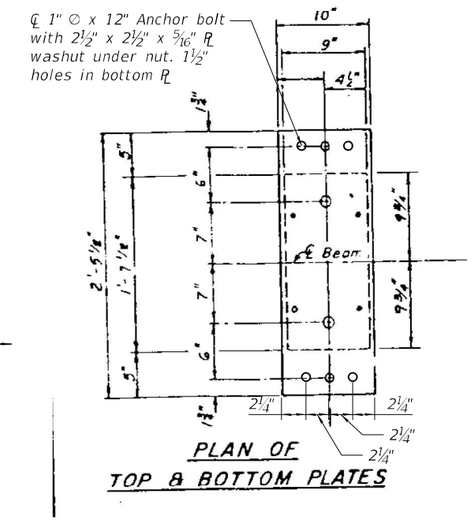

ANCHOR BOLTS

(West Side N1.11
Both Sides N1.12)

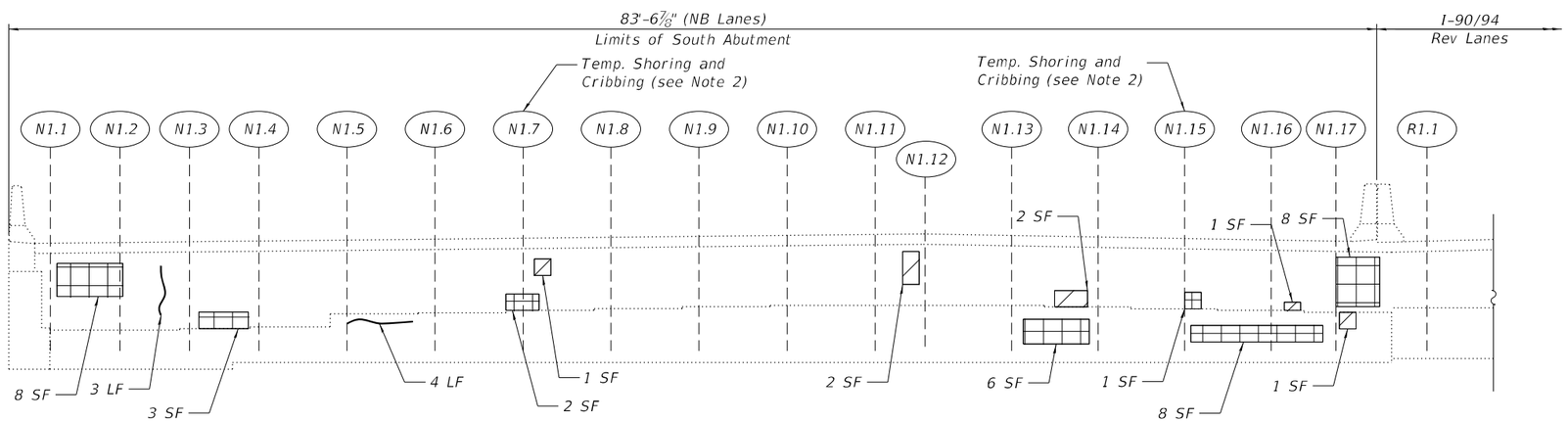

SOUTH ABUTMENT ELEVATION

(Looking South)

SUMMARY OF REACTIONS		
		South Abutment, N1.7 & N1.15
R DL	(k)	62.9
R LL	(k)	66.9
R IM	(k)	35.8
R Total	(k)	165.6

LEGEND

- Structural Repair of Concrete (Depth Equal to or Less than 5 inches)
- Structural Repair of Concrete (Depth Greater than 5 inches)
- Epoxy Crack Injection (Width > 0.06")
- SF — Square Foot
- LF — Linear Foot

NOTES:

1. Quantities and limits shown are estimated for bidding purposes only. The actual areas to be repaired, and the type(s) of repairs to be used, will be determined by the Engineer in the field at the time of construction.
2. Temporary shoring and cribbing shall be installed prior to the start of the structural repair of concrete and shall be removed after completing the structural repair of concrete.
3. For Slope Wall repairs, see Sheet S03A-146.
4. For additional Fixed Bearing details, see Sheet S03A-121.
5. Cost of drilling anchor bolts included with Anchor Bolts, 1".
6. Concrete Sealer is to be applied to the abutment seats and the bottom 2 feet of the abutment backwall.

BILL OF MATERIAL

ITEM	UNIT	QUANTITY
Concrete Sealer	Sq Ft	512
Epoxy Crack Injection	Foot	23
Structural Repair Of Concrete (Depth Equal To Or Less Than 5 Inches)	Sq Ft	92

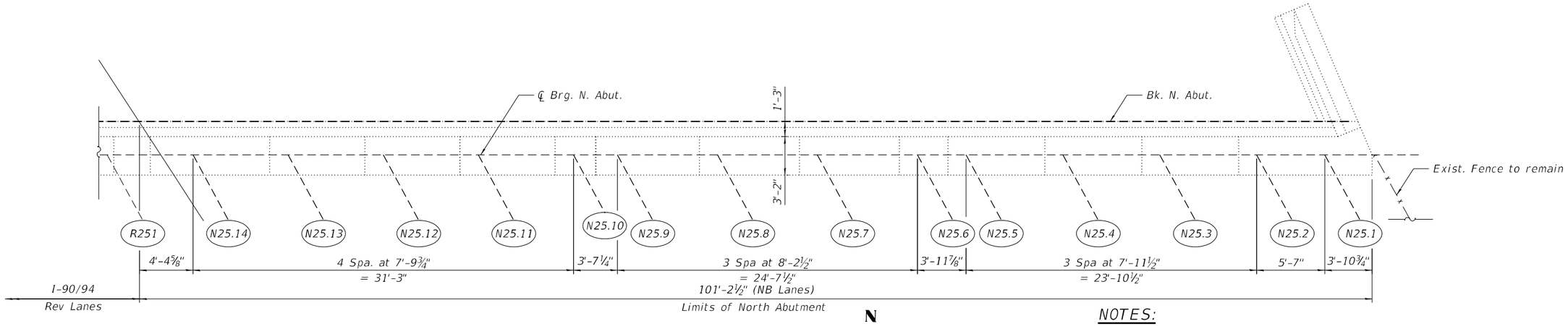

NORTH ABUTMENT PLAN

N

NOTES:

1. Quantities and limits show are estimated for bidding purposes only. The actual areas to be repaired, and the type(s) of repairs to be used, will be determined by the Engineer in the field at the time of construction.
2. For Slope Wall repairs, see Sheet S03A-147.
3. The cost of replacing the missing anchor bolts at the East and West face of Beams N25.5 and N25.6 will not be paid separately and shall be included with the Structural Repair of Concrete (Depth Equal To or Less Than 5 Inches).
4. Concrete Sealer is to be applied to the abutment seats and the bottom 2 feet of the abutment backwall.

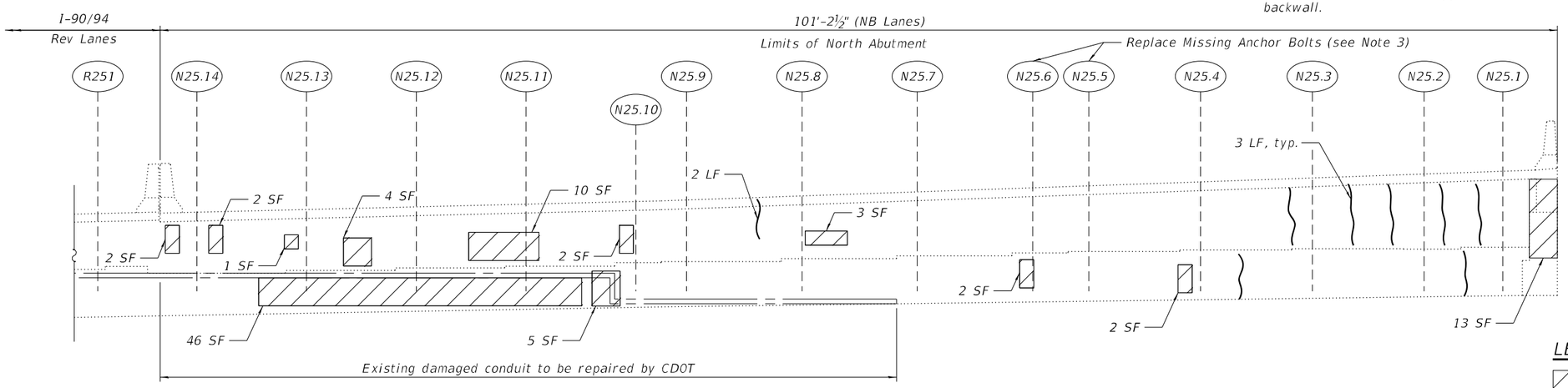

NORTH ABUTMENT ELEVATION

(Looking North)

LEGEND

Structural Repair of Concrete (Depth Equal to or Less than 5 inches)

Epoxy Crack Injection (Width > 0.06")

SF Square Foot

LF Linear Foot

MODEL: Default
FILE NAME: P:\2004-823 PTB195-014 HBM\WO#7 I-90 Various Overlays\Ashland Ave\Sheet Files\0160133-62K73-S102-North Abutment Repairs.dgn

HBM ENGINEERING GROUP, LLC	USER NAME =	DESIGNED - LAB, FL	REVISED -	STATE OF ILLINOIS DEPARTMENT OF TRANSPORTATION	NORTH ABUTMENT REPAIRS STRUCTURE NO. 016-0133 (NB)
		CHECKED - MI	REVISED -		
	PLOT SCALE =	DRAWN - LAB, FL	REVISED -		
	PLOT DATE =	DATE - 4/29/2024	REVISED -		SHEET S03A-125 OF S03A-148 SHEETS

F.A.I. RTE.	SECTION	COUNTY	TOTAL SHEETS	SHEET NO.
90/94	2020-005-BR	COOK	908	453
		CONTRACT NO. 62K73		
	ILLINOIS	FED. AID PROJECT		

4/30/2024 3:24:30 PM

BILL OF MATERIAL

ITEM	UNIT	QUANTITY
Concrete Sealer	Sq Ft	369
Structural Repair Of Concrete (Depth Equal To Or Less Than 5 Inches)	Sq Ft	10

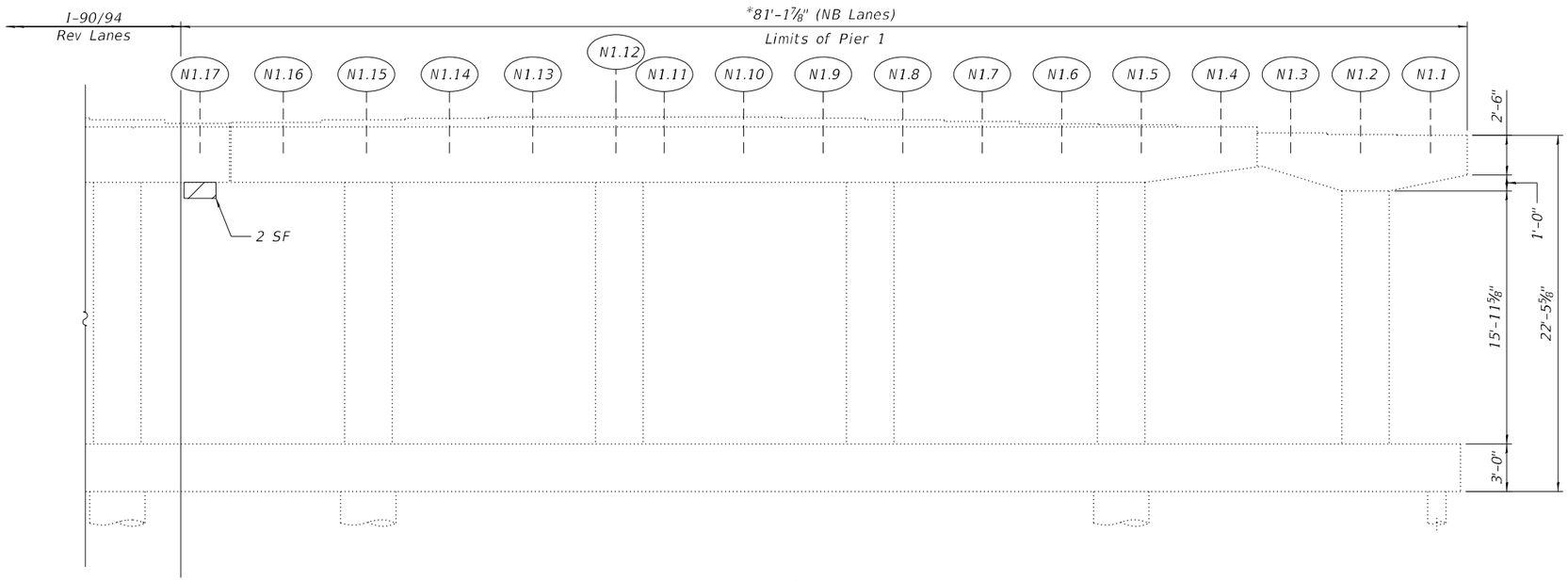

PIER 1 ELEVATION

(Looking North)

*Length measured perpendicular to the centerline of the NB lanes

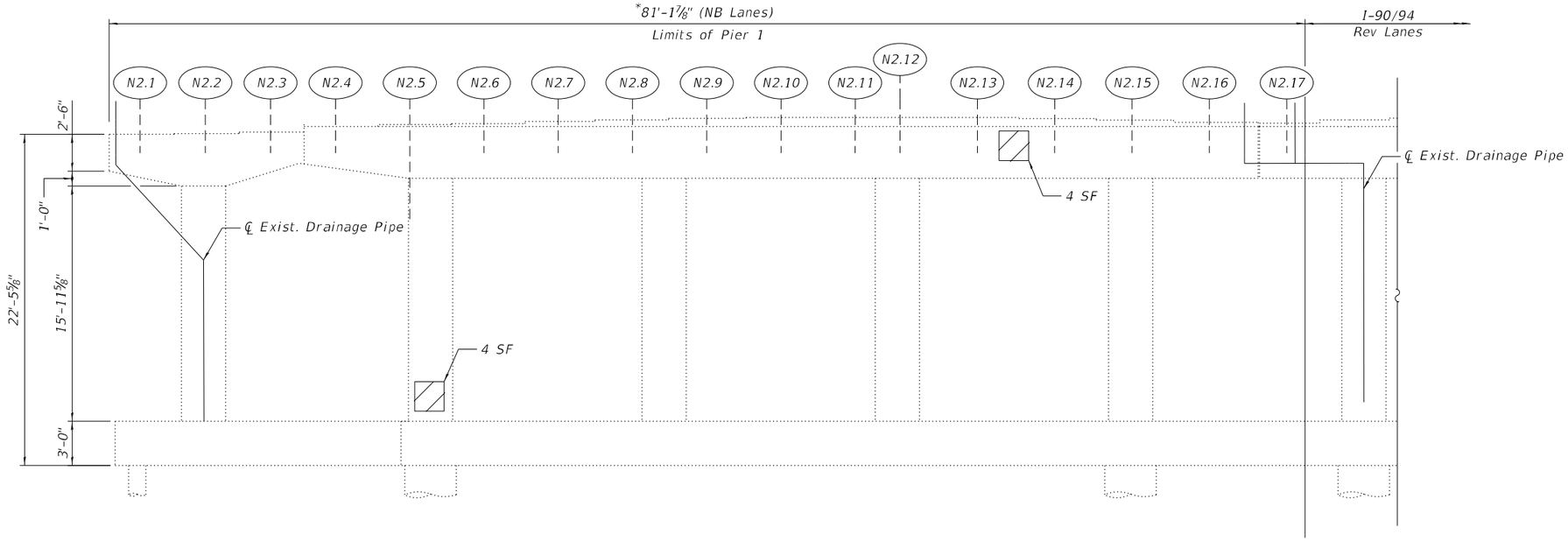

PIER 1 ELEVATION

(Looking South)

NOTES:

1. Quantities and limits shown are estimated for bidding purpose only. The actual areas to be repaired and the type(s) of repairs to be used will be determined by the engineer in the field at the time of construction.

2. Concrete Sealer is to be applied to the top of the pier cap.

PIER 1 - EAST END

(Looking South)

LEGEND

Structural Repair of Concrete (Depth Equal to or Less than 5 inches)

SF Square Foot

MODEL: Default
FILE NAME: P:\2004-823 PTB195-014 HBM\WO#7 I-90 Various Overlays\Ashland Ave\Sheet Files\0160133-62K73-S103-Pier 1 Repairs.dgn
4/30/2024 3:24:35 PM

HBM ENGINEERING GROUP, LLC

USER NAME =	DESIGNED - LAB, AMS	REVISED -	
	CHECKED - MI	REVISED -	
PLOT SCALE =	DRAWN - LAB, AMS	REVISED -	
PLOT DATE =	DATE - 4/29/2024	REVISED -	

STATE OF ILLINOIS
DEPARTMENT OF TRANSPORTATION

PIER 1 REPAIRS
STRUCTURE NO. 016-0133 (NB)

SHEET S03A-126 OF S03A-148 SHEETS

F.A.I. RTE.	SECTION	COUNTY	TOTAL SHEETS	SHEET NO.
90/94	2020-005-BR	COOK	908	454

CONTRACT NO. 62K73

ILLINOIS FED. AID PROJECT

BILL OF MATERIAL

ITEM	UNIT	QUANTITY
Concrete Sealer	Sq Ft	284
Epoxy Crack Injection	Foot	3
Bridge Drainage System Repair	Foot	2
Structural Repair Of Concrete (Depth Equal To Or Less Than 5 Inches)	Sq Ft	10

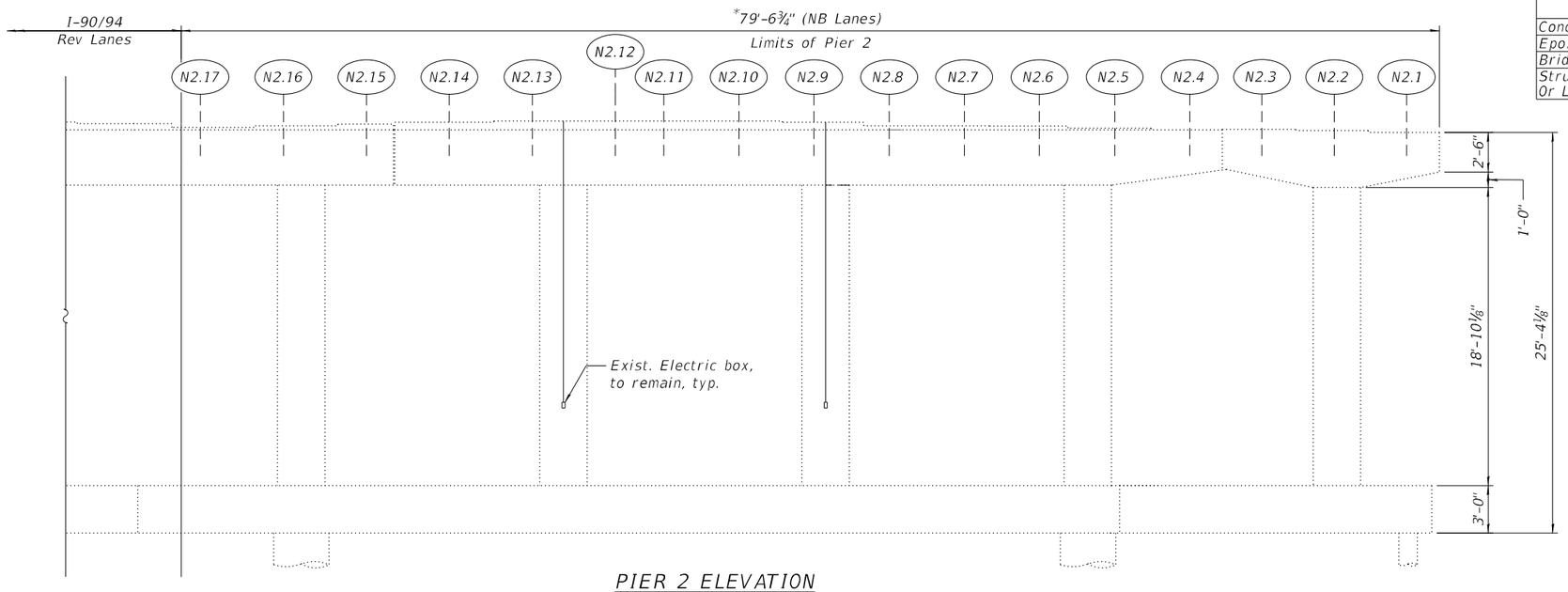

PIER 2 ELEVATION

(Looking North)

*Length measured perpendicular to the centerline of the NB lanes

PIER 2

(Looking North)

PIER 2 - EAST END

(Looking South)

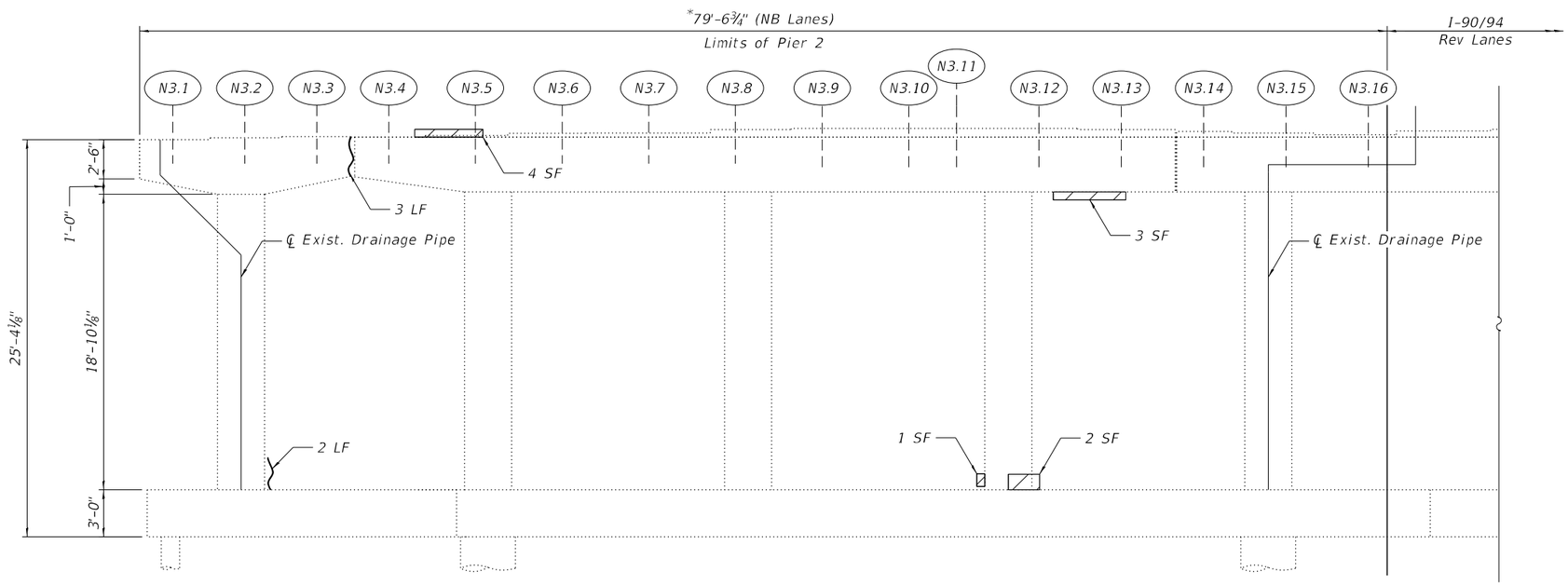

PIER 2 ELEVATION

(Looking South)

PIER 2 - WEST END

(Looking South)

NOTES:

1. Quantities and limits shown are estimated for bidding purpose only. The actual areas to be repaired and the type(s) of repairs to be used will be determined by the engineer in the field at the time of construction.
2. Concrete Sealer is to be applied to the top of the pier cap.

LEGEND

Structural Repair of Concrete (Depth Equal to or Less than 5 inches)

Epoxy Crack Injection (Width > 0.06")

SF Square Foot

LF Linear Foot

MODEL: Default
FILE NAME: P:\2004-825 PTB 195-014 HBM\WO#7 I-90 Various Overlays\Ashland Ave\Sheet Files\0160133-62K73-S104-Pier 2 Repairs.dgn
4/30/2024 3:24:40 PM

HBM ENGINEERING GROUP, LLC

USER NAME =	DESIGNED - LAB, AMS	REVISED -	
	CHECKED - MI	REVISED -	
PLOT SCALE =	DRAWN - LAB, AMS	REVISED -	
PLOT DATE =	DATE - 4/29/2024	REVISED -	

STATE OF ILLINOIS
DEPARTMENT OF TRANSPORTATION

PIER 2 REPAIRS
STRUCTURE NO. 016-0133 (NB)

SHEET S03A-127 OF S03A-148 SHEETS

F.A.I. RTE.	SECTION	COUNTY	TOTAL SHEETS	SHEET NO.
90/94	2020-005-BR	COOK	908	455

CONTRACT NO. 62K73

ILLINOIS | FED. AID PROJECT

BILL OF MATERIAL

ITEM	UNIT	QUANTITY
Concrete Sealer	Sq Ft	277
Bridge Drainage System Repair	Foot	5
Structural Repair Of Concrete (Depth Equal To Or Less Than 5 Inches)	Sq Ft	131

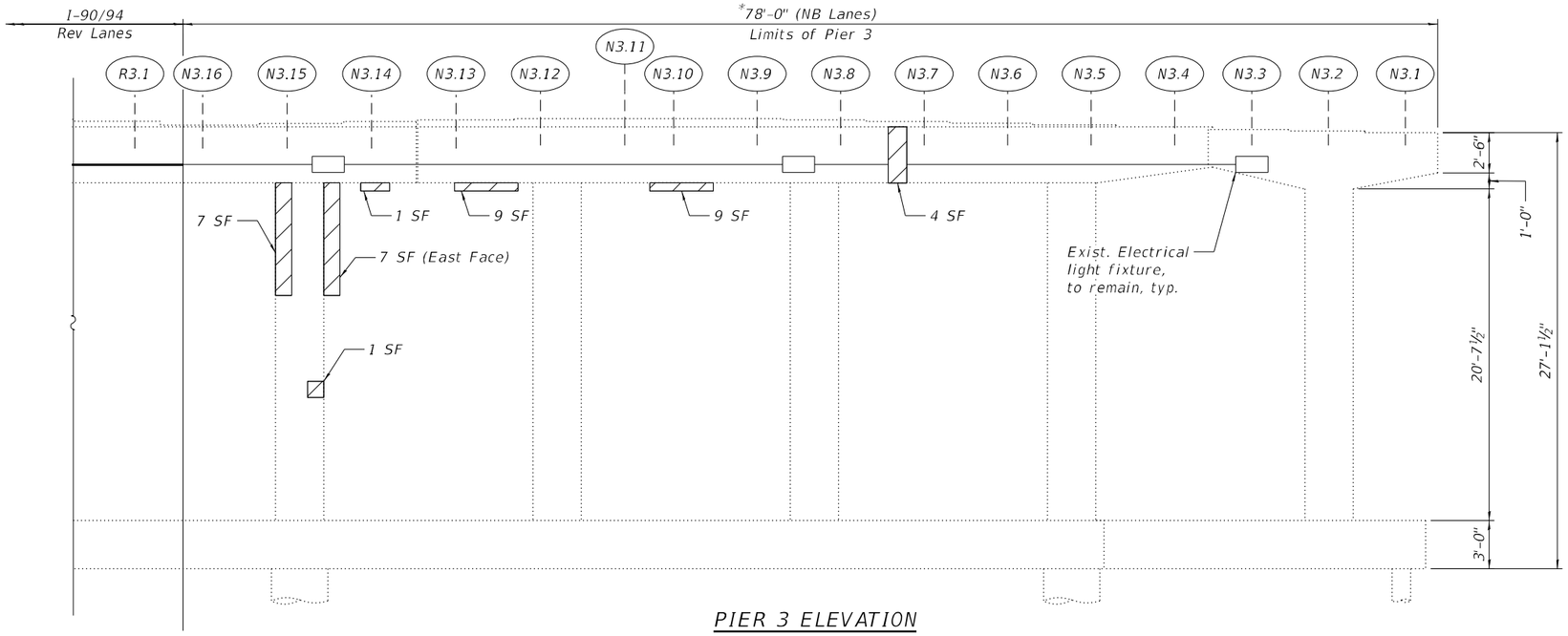

PIER 3 ELEVATION

(Looking North)

*Length measured perpendicular to the centerline of the NB lanes

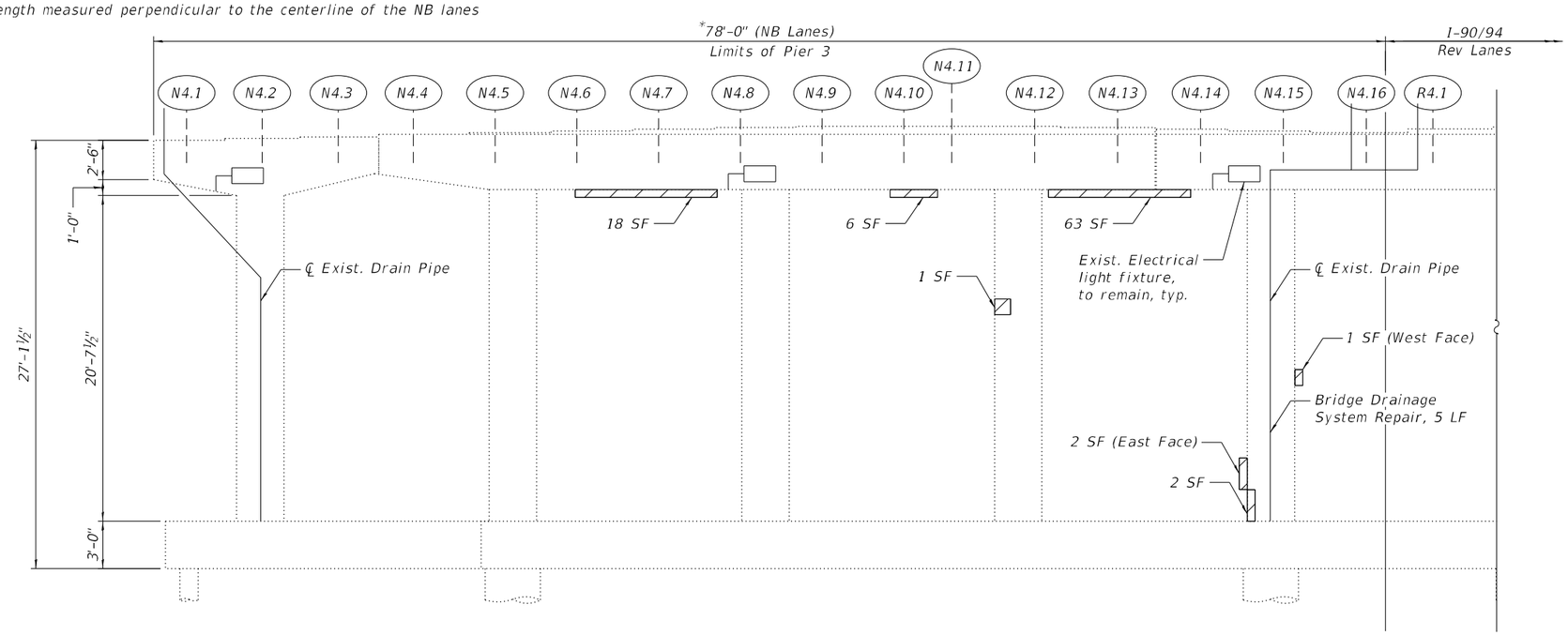

PIER 3 ELEVATION

(Looking South)

PIER 3

(Looking North)

PIER 3 - EAST END

(Looking South)

PIER 3 - WEST END

(Looking South)

NOTES:

1. Quantities and limits shown are estimated for bidding purpose only. The actual areas to be repaired and the type(s) of repairs to be used will be determined by the engineer in the field at the time of construction.

2. Concrete Sealer is to be applied to the top of the pier cap.

LEGEND

Structural Repair of Concrete (Depth Equal to or Less than 5 inches)

SF Square Foot

HBM ENGINEERING GROUP, LLC

USER NAME =	DESIGNED - LAB, AMS	REVISED -	
	CHECKED - MI	REVISED -	
PLOT SCALE =	DRAWN - LAB, AMS	REVISED -	
PLOT DATE =	DATE - 4/29/2024	REVISED -	

STATE OF ILLINOIS
DEPARTMENT OF TRANSPORTATION

PIER 3 REPAIRS
STRUCTURE NO. 016-0133 (NB)

SHEET S03A-128 OF S03A-148 SHEETS

F.A.I. RTE.	SECTION	COUNTY	TOTAL SHEETS	SHEET NO.
90/94	2020-005-BR	COOK	908	456
		CONTRACT NO. 62K73		
		ILLINOIS	FED. AID PROJECT	

MODEL: Default
FILE NAME: P:\2004-825 PTB195-014 HBM\WO#7 I-90 Various Overlays\Ashland Ave\Sheet Files\0160133-62K73-S105-Pier 3 Repairs.dgn
4/30/2024 3:24:45 PM

BILL OF MATERIAL

ITEM	UNIT	QUANTITY
Structural Repair Of Concrete (Depth Equal To Or Less Than 5 Inches)	Sq Ft	93

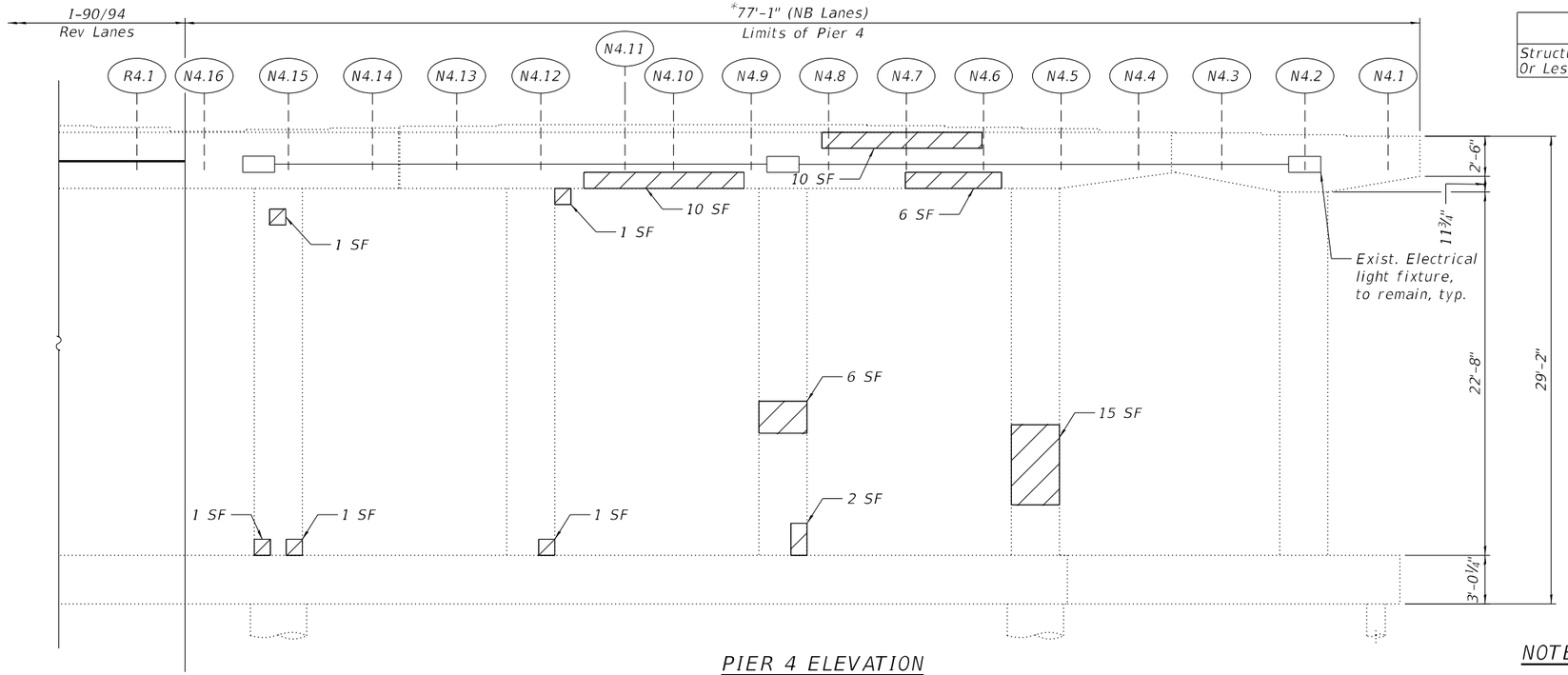

PIER 4 ELEVATION

(Looking North)

PIER 4

(Looking North)

NOTE:

1. Quantities and limits shown are estimated for bidding purpose only. The actual areas to be repaired and the type(s) of repairs to be used will be determined by the engineer in the field at the time of construction.

*Length measured perpendicular to the centerline of the NB lanes

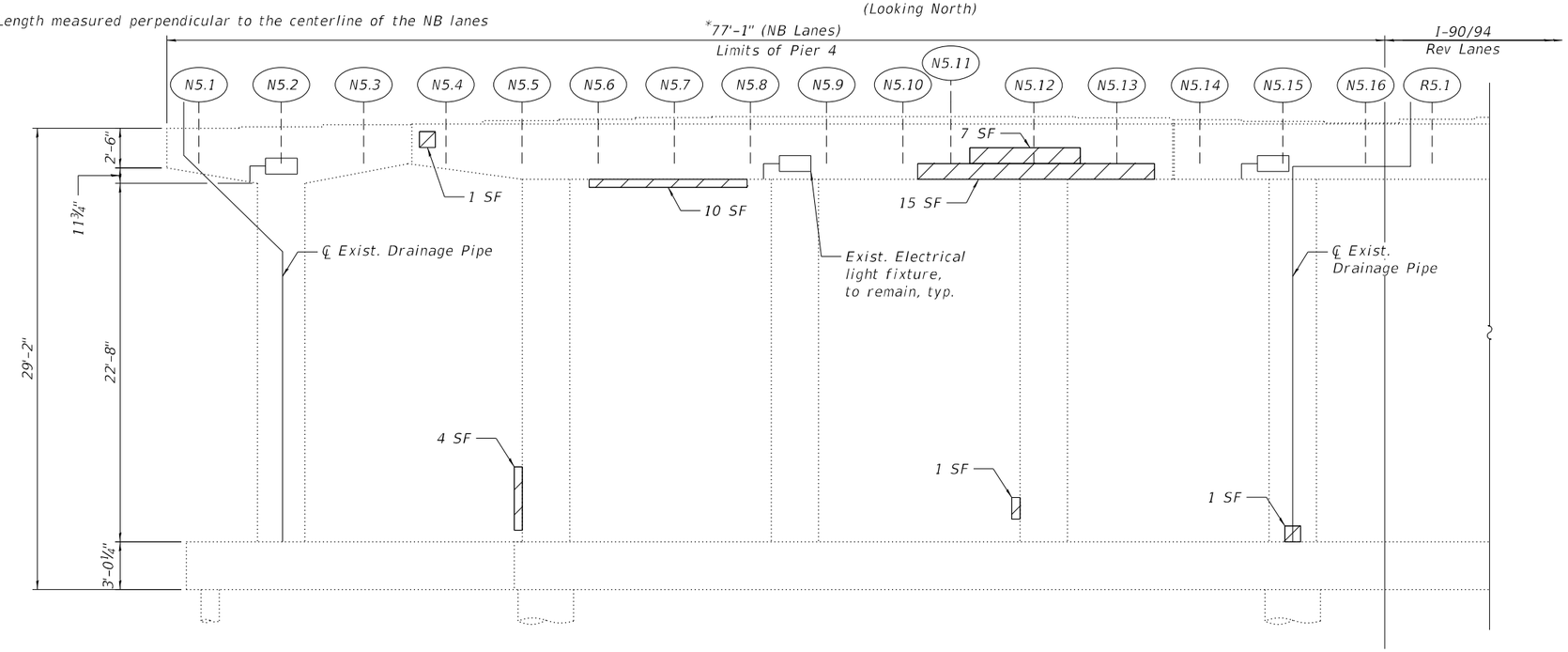

PIER 4 ELEVATION

(Looking South)

PIER 4

(Looking South)

LEGEND

Structural Repair of Concrete (Depth Equal to or Less than 5 inches)

SF Square Foot

USER NAME =	DESIGNED - LAB, AMS	REVISED -	
	CHECKED - MI	REVISED -	
PLOT SCALE =	DRAWN - LAB, AMS	REVISED -	
PLOT DATE =	DATE - 4/29/2024	REVISED -	

HBM ENGINEERING GROUP, LLC

STATE OF ILLINOIS
DEPARTMENT OF TRANSPORTATION

PIER 4 REPAIRS
STRUCTURE NO. 016-0133 (NB)

SHEET S03A-129 OF S03A-148 SHEETS

F.A.I. RTE.	SECTION	COUNTY	TOTAL SHEETS	SHEET NO.
90/94	2020-005-BR	COOK	908	457

CONTRACT NO. 62K73

ILLINOIS FED. AID PROJECT

MODEL: Default
FILE NAME: P:\2004-825 PTB 195-014 HBM\WO#7 I-90 Various Overlays\Ashland Ave\Sheet Files\0160133-62K73-S106-Pier 4 Repairs.dgn
4/30/2024 3:24:51 PM

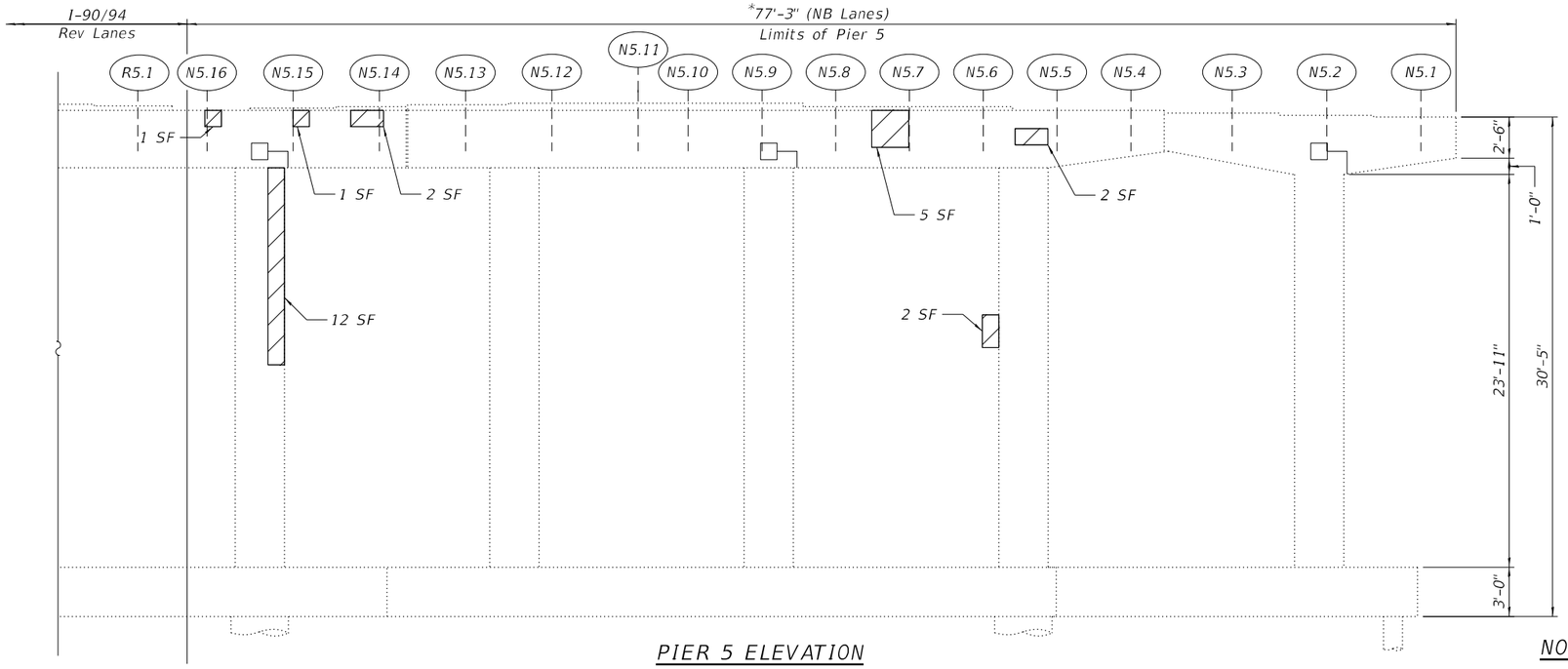

PIER 5 ELEVATION

(Looking North)

*Length measured perpendicular to the centerline of the NB lanes

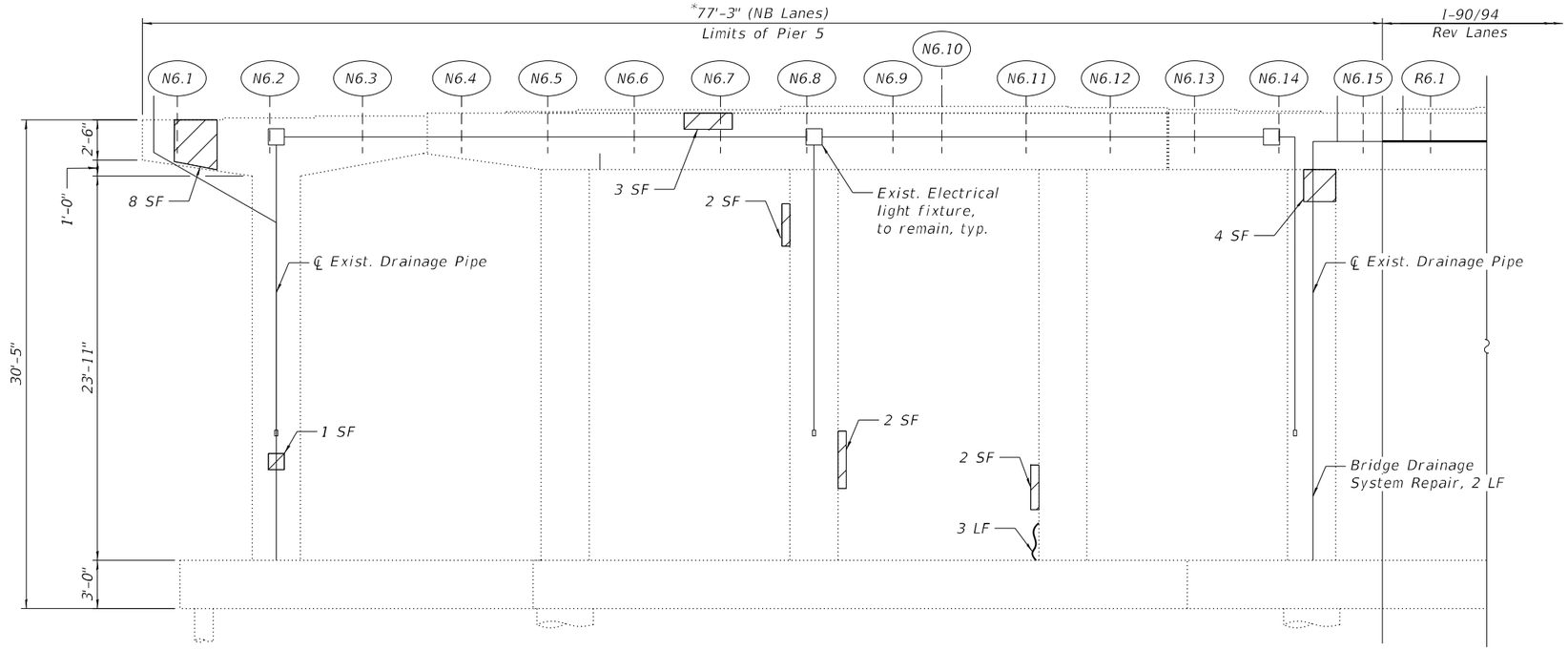

PIER 5 ELEVATION

(Looking South)

BILL OF MATERIAL

ITEM	UNIT	QUANTITY
Concrete Sealer	Sq Ft	273
Epoxy Crack Injection	Foot	3
Bridge Drainage System Repair	Foot	2
Structural Repair Of Concrete (Depth Equal To Or Less Than 5 Inches)	Sq Ft	47

PIER 5

(Looking Northeast)

NOTES:

1. Quantities and limits shown are estimated for bidding purpose only. The actual areas to be repaired and the type(s) of repairs to be used will be determined by the engineer in the field at the time of construction.
2. Concrete Sealer is to be applied to the top of the pier cap.

PIER 5

(Looking Southwest)

LEGEND

	Structural Repair of Concrete (Depth Equal to or Less than 5 inches)
	Epoxy Crack Injection (Width > 0.06")
SF	Square Foot
LF	Linear Foot

MODEL: Default
FILE NAME: P:\2004-823 PTB 195-014 HBM\WO#7 I-90 Various Overlays\Ashland Ave\Sheet Files\0160133-62K73-S107-Pier 5 Repairs.dgn
4/30/2024 3:24:56 PM

HBM ENGINEERING GROUP, LLC

USER NAME =	DESIGNED - LAB, AMS	REVISED -	
	CHECKED - MI	REVISED -	
PLOT SCALE =	DRAWN - LAB, AMS	REVISED -	
PLOT DATE =	DATE - 4/29/2024	REVISED -	

STATE OF ILLINOIS
DEPARTMENT OF TRANSPORTATION

PIER 5 REPAIRS
STRUCTURE NO. 016-0133 (NB)

SHEET S03A-130 OF S03A-148 SHEETS

F.A.I. RTE.	SECTION	COUNTY	TOTAL SHEETS	SHEET NO.
90/94	2020-005-BR	COOK	908	458

CONTRACT NO. 62K73

ILLINOIS | FED. AID PROJECT

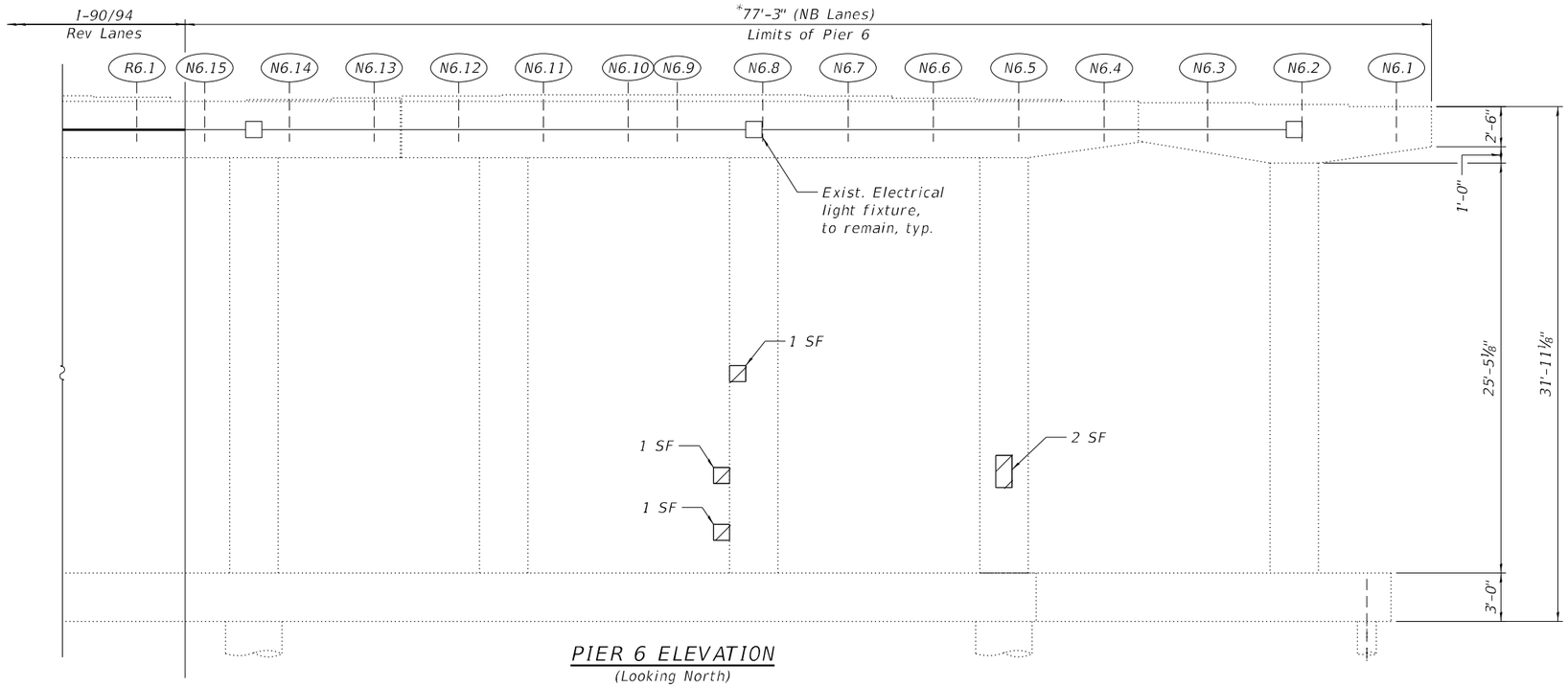

PIER 6 ELEVATION

(Looking North)

*Length is measured perpendicular to the centerline of the NB lanes.

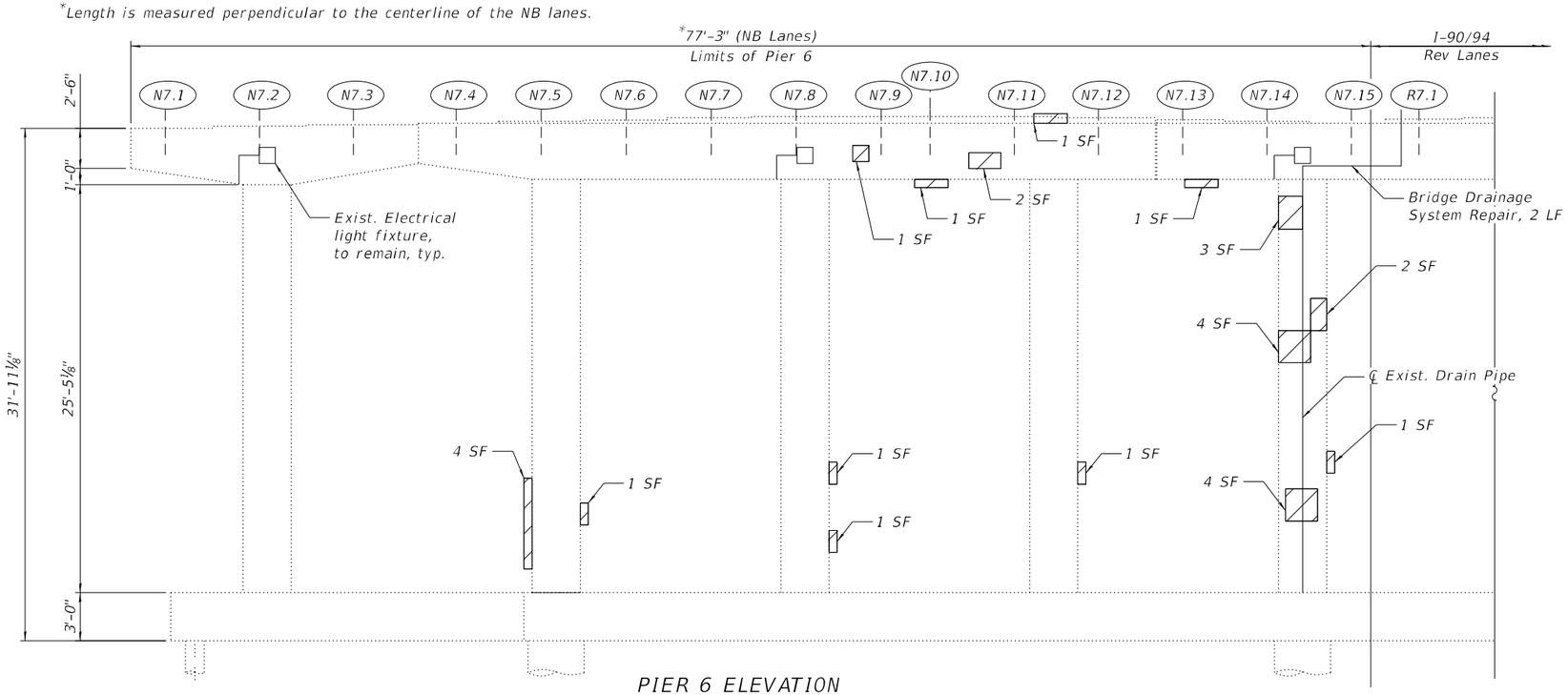

PIER 6 ELEVATION

(Looking South)

BILL OF MATERIAL

ITEM	UNIT	QUANTITY
Bridge Drainage System Repair	Foot	2
Structural Repair Of Concrete (Depth Equal To Or Less Than 5 Inches)	Sq Ft	33

PIER 6

(Looking Northeast)

NOTE:

1. Quantities and limits shown are estimated for bidding purpose only. The actual areas to be repaired and the type(s) of repairs to be used will be determined by the engineer in the field at the time of construction.

PIER 6 - WEST END

(Looking South)

LEGEND

Structural Repair of Concrete (Depth Equal to or Less than 5 inches)

SF Square Foot

MODEL: Default
FILE NAME: P:\2004-825 PTB 195-014 HBM\WO#7 I-90 Various Overlays\Ashland Ave\Sheet Files\0160133-62K73-S108-Pier 6 Repairs.dgn
4/30/2024 3:25:02 PM

HBM ENGINEERING GROUP, LLC

USER NAME =	DESIGNED - LAB, AMS	REVISED -
	CHECKED - MI	REVISED -
PLOT SCALE =	DRAWN - LAB, AMS	REVISED -
PLOT DATE =	DATE - 4/29/2024	REVISED -

STATE OF ILLINOIS
DEPARTMENT OF TRANSPORTATION

PIER 6 REPAIRS
STRUCTURE NO. 016-0133 (NB)

SHEET S03A-131 OF S03A-148 SHEETS

F.A.I. RTE.	SECTION	COUNTY	TOTAL SHEETS	SHEET NO.
90/94	2020-005-BR	COOK	908	459

CONTRACT NO. 62K73

ILLINOIS FED. AID PROJECT

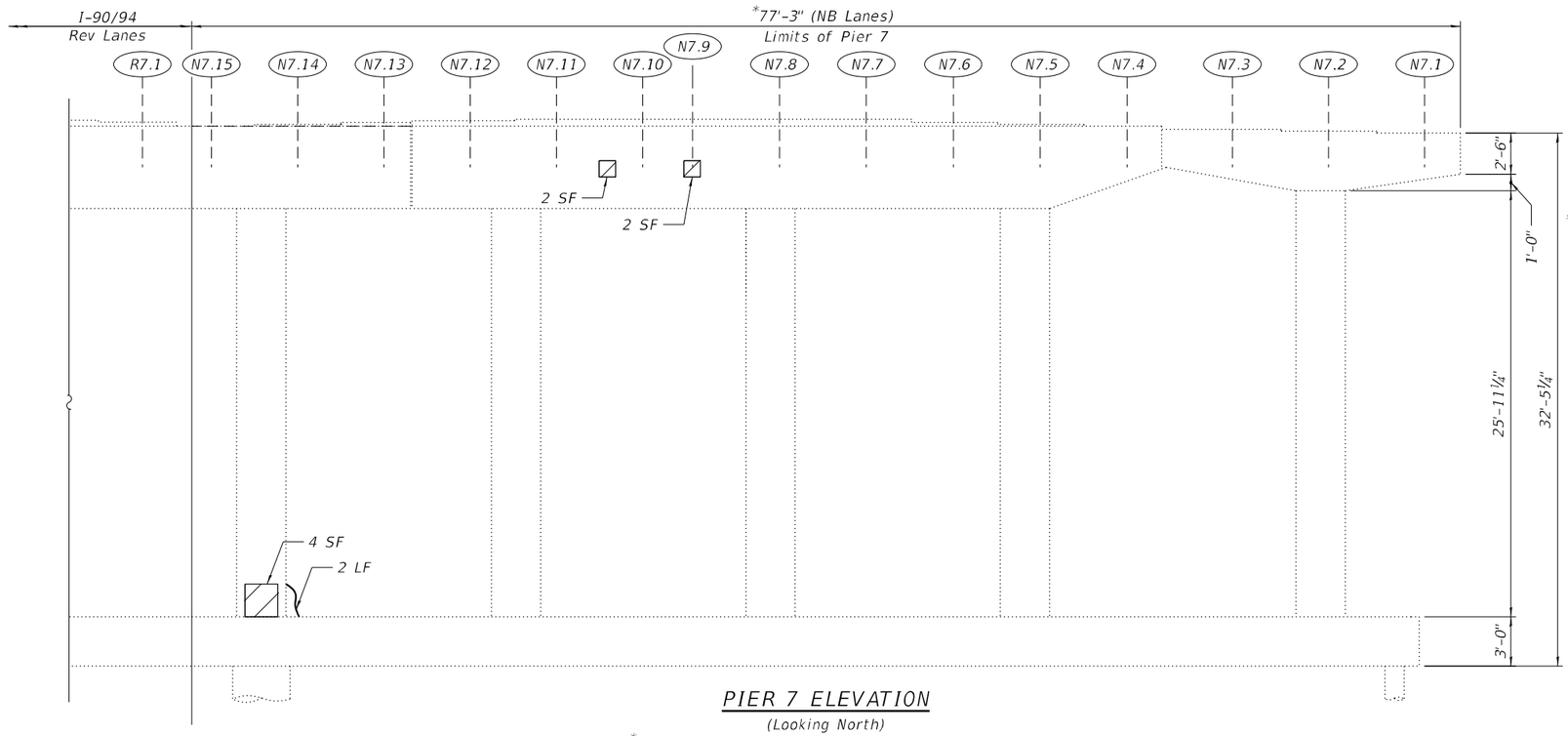

PIER 7 ELEVATION

(Looking North)

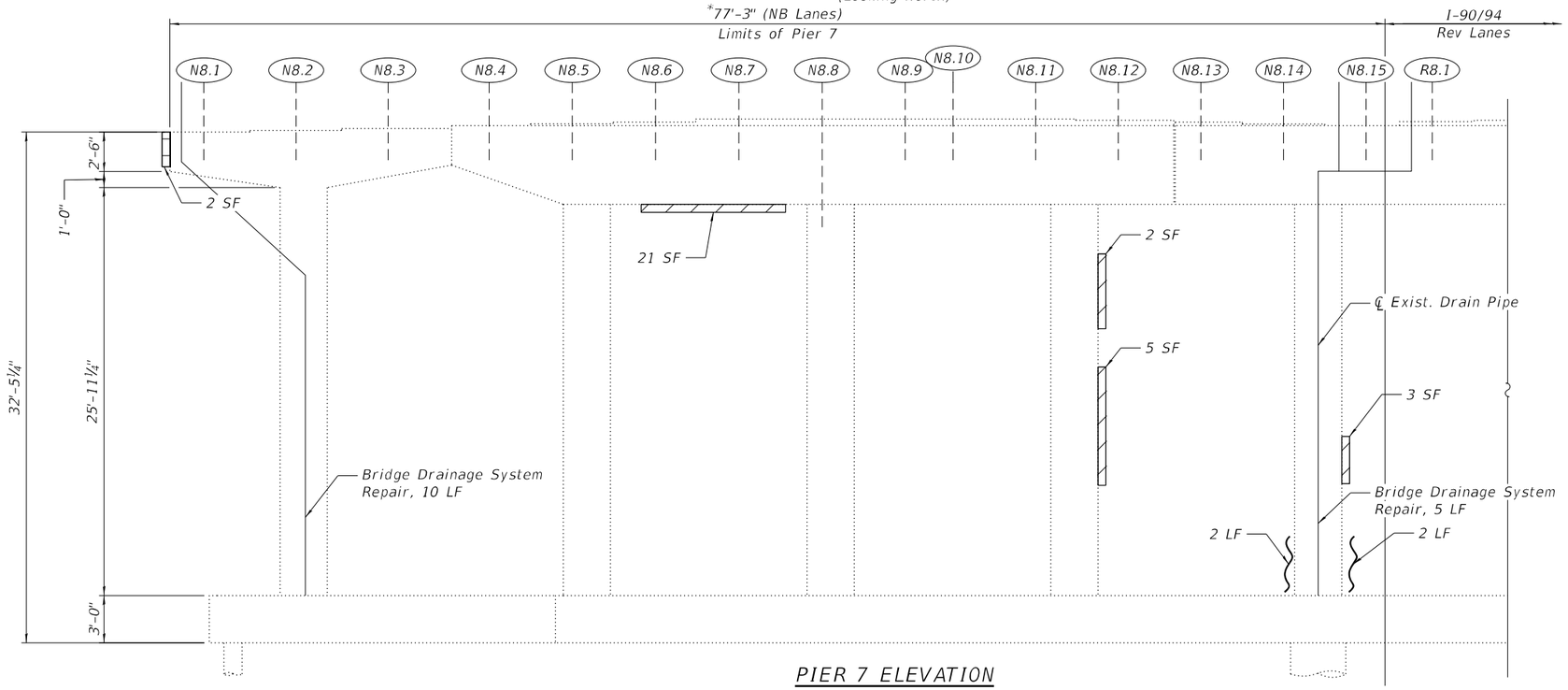

PIER 7 ELEVATION

(Looking South)

BILL OF MATERIAL

ITEM	UNIT	QUANTITY
Concrete Sealer	Sq Ft	273
Epoxy Crack Injection	Foot	6
Bridge Drainage System Repair	Foot	15
Structural Repair Of Concrete (Depth Equal To Or Less Than 5 Inches)	Sq Ft	39
Structural Repair Of Concrete (Depth Greater Than 5 Inches)	Sq Ft	2

*Length is measured perpendicular to the centerline of the NB lanes.

PIER 7 - EAST END

(Looking Southwest)

NOTES:

1. Quantities and limits shown are estimated for bidding purpose only. The actual areas to be repaired and the type(s) of repairs to be used will be determined by the engineer in the field at the time of construction.
2. Concrete Sealer is to be applied to the top of the pier cap.

PIER 7 - WEST END

(Looking South)

LEGEND

- Structural Repair of Concrete (Depth Equal to or Less than 5 inches)
- Structural Repair of Concrete (Depth Greater than 5 inches)
- Epoxy Crack Injection (Width > 0.06")
- SF — Square Foot
- LF — Linear Foot

MODEL: Default
FILE NAME: P:\2004825 PTB195-014 HBM\WO#7 I-90 Various Overlays\Ashland Ave\Sheet Files\0160133-62K73-S109-Pier 7 Repairs.dgn
4/30/2024 3:25:07 PM

HBM ENGINEERING GROUP, LLC

USER NAME =	DESIGNED - LAB, AMS	REVISED -	
	CHECKED - MI	REVISED -	
PLOT SCALE =	DRAWN - LAB, AMS	REVISED -	
PLOT DATE =	DATE - 4/29/2024	REVISED -	

STATE OF ILLINOIS
DEPARTMENT OF TRANSPORTATION

PIER 7 REPAIRS
STRUCTURE NO. 016-0133 (NB)

SHEET S03A-132 OF S03A-148 SHEETS

F.A.I. RTE.	SECTION	COUNTY	TOTAL SHEETS	SHEET NO.
90/94	2020-005-BR	COOK	908	460

CONTRACT NO. 62K73

ILLINOIS FED. AID PROJECT

BILL OF MATERIAL

ITEM	UNIT	QUANTITY
Concrete Sealer	Sq Ft	273
Structural Repair Of Concrete (Depth Equal To Or Less Than 5 Inches)	Sq Ft	7

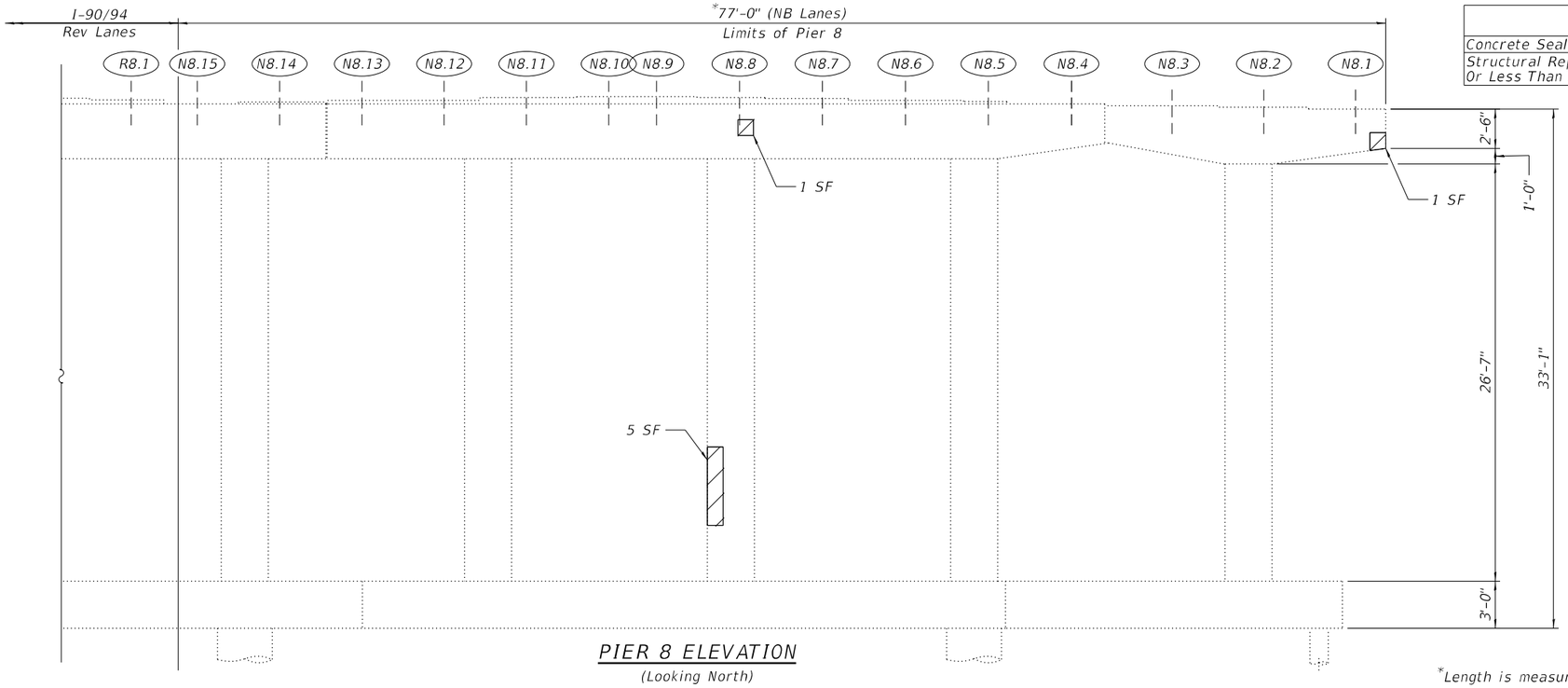

PIER 8 ELEVATION
(Looking North)

*Length is measured perpendicular to the centerline of the NB lanes.

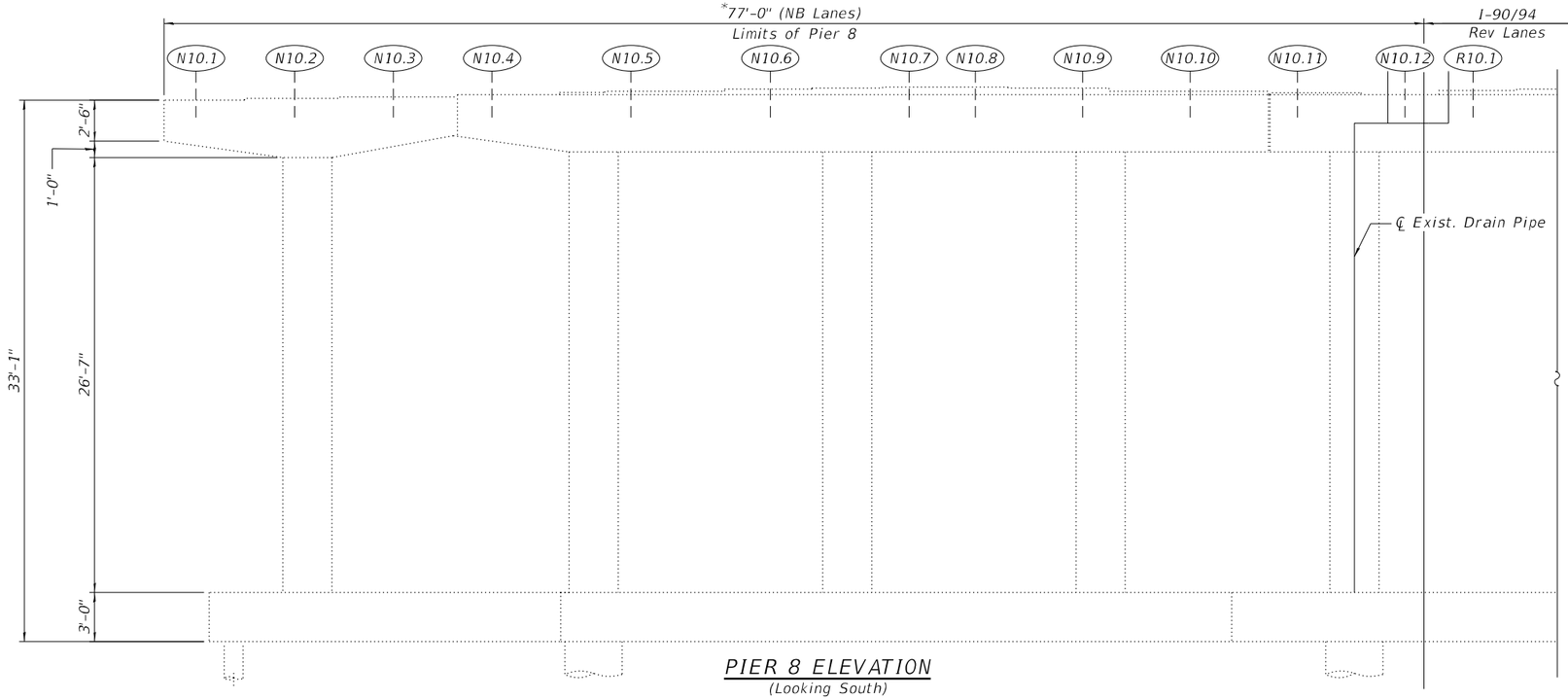

PIER 8 ELEVATION
(Looking South)

NOTES:

1. Quantities and limits shown are estimated for bidding purpose only. The actual areas to be repaired and the type(s) of repairs to be used will be determined by the engineer in the field at the time of construction.

2. Concrete Sealer is to be applied to the top of the pier cap.

PIER 8 - WEST END
(Looking Southwest)

LEGEND

Structural Repair of Concrete (Depth Equal to or Less than 5 inches)

SF — Square Foot

MODEL: Default
FILE NAME: P:\2004-825 PTB195-014 HBM\WO#7 I-90 Various Overlays\Ashland Ave\Sheet Files\0160133-62K73-S110-Pier 8 Repairs.dgn
4/30/2024 3:25:13 PM

HBM ENGINEERING GROUP, LLC

USER NAME =	DESIGNED - LAB, AMS	REVISED -	
	CHECKED - MI	REVISED -	
PLOT SCALE =	DRAWN - LAB, AMS	REVISED -	
PLOT DATE =	DATE - 4/29/2024	REVISED -	

STATE OF ILLINOIS
DEPARTMENT OF TRANSPORTATION

PIER 8 REPAIRS
STRUCTURE NO. 016-0133 (NB)

SHEET S03A-133 OF S03A-148 SHEETS

F.A.I. RTE.	SECTION	COUNTY	TOTAL SHEETS	SHEET NO.
90/94	2020-005-BR	COOK	908	461

CONTRACT NO. 62K73

ILLINOIS | FED. AID PROJECT

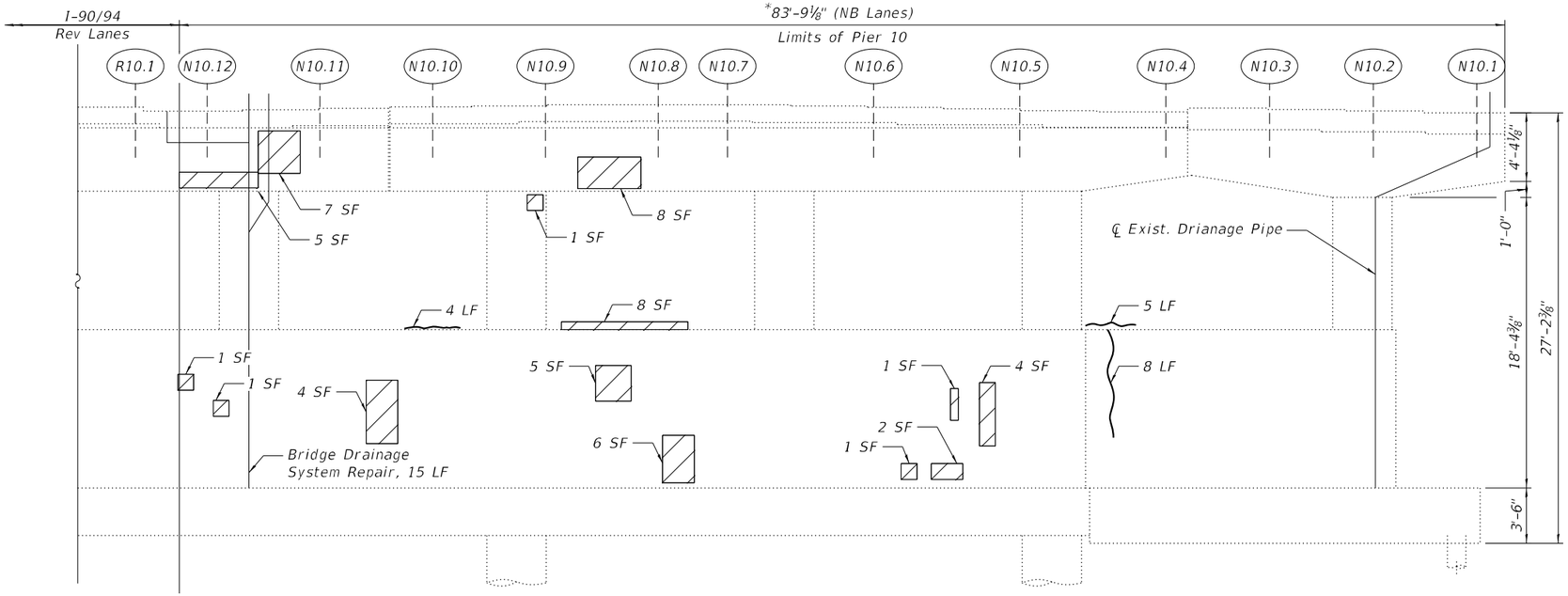

*Length measured perpendicular to the centerline of the NB lanes

PIER 10 ELEVATION
(Looking North)

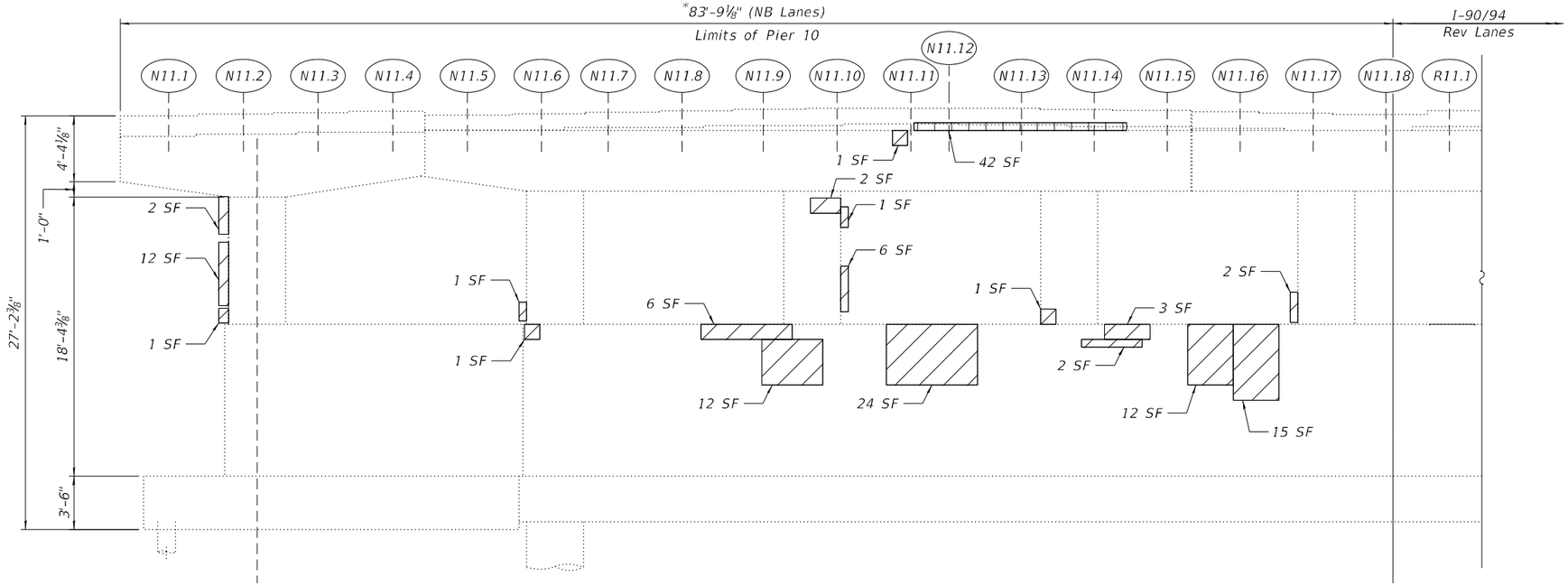

PIER 10 ELEVATION
(Looking South)

BILL OF MATERIAL

ITEM	UNIT	QUANTITY
Concrete Sealer	Sq Ft	383
Epoxy Crack Injection	Foot	17
Bridge Drainage System Repair	Foot	15
Structural Repair Of Concrete (Depth Equal To Or Less Than 5 Inches)	Sq Ft	158
Structural Repair Of Concrete (Depth Greater Than 5 Inches)	Sq Ft	42

PIER 10- WEST END
(Looking North)

NOTES:

1. Quantities and limits shown are estimated for bidding purpose only. The actual areas to be repaired and the type(s) of repairs to be used will be determined by the engineer in the field at the time of construction.
2. Concrete Sealer is to be applied to the top of the pier cap.

PIER 10 - EAST END
(Looking North)

LEGEND

Epoxy Crack Injection (Width > 0.06")

Structural Repair of Concrete (Depth Equal to or Less than 5 inches)

Structural Repair of Concrete (Depth Greater than 5 inches)

SF Square Foot

LF Linear Foot

MODEL: Default
FILE NAME: P:\2004-825 PTB 195-014 HBM\WO#7 I-90 Various Overlays\Ashland Ave\Sheet Files\0160133-62K73-S111-Pier 10 Repairs.dgn
4/30/2024 3:25:18 PM

HBM ENGINEERING GROUP, LLC

USER NAME =	DESIGNED - LAB, AMS	REVISED -	
	CHECKED - MI	REVISED -	
PLOT SCALE =	DRAWN - LAB, AMS	REVISED -	
PLOT DATE =	DATE - 4/29/2024	REVISED -	

STATE OF ILLINOIS
DEPARTMENT OF TRANSPORTATION

PIER 10 REPAIRS
STRUCTURE NO. 016-0133 (NB)

SHEET S03A-134 OF S03A-148 SHEETS

F.A.I. RTE.	SECTION	COUNTY	TOTAL SHEETS	SHEET NO.
90/94	2020-005-BR	COOK	908	462

CONTRACT NO. 62K73

ILLINOIS | FED. AID PROJECT

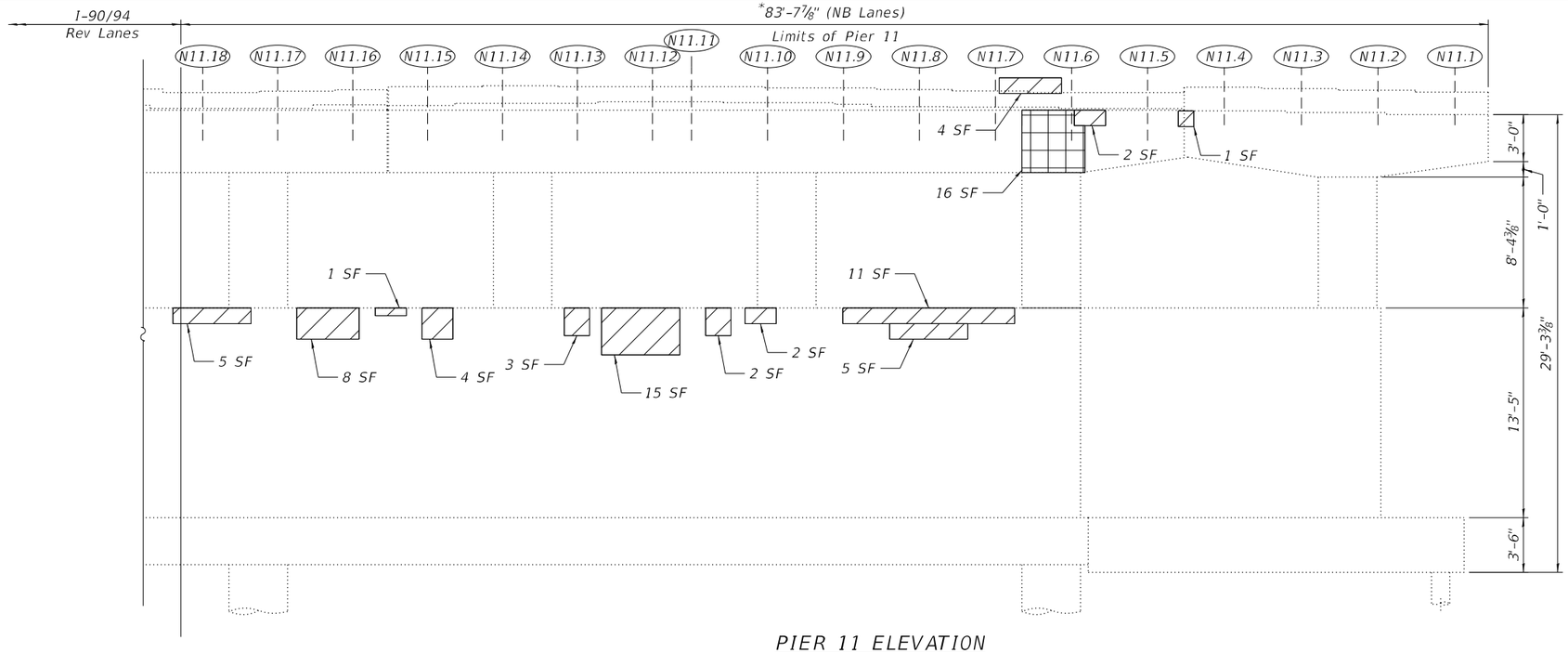

PIER 11 ELEVATION

(Looking North)

*Length measured perpendicular to the centerline of the NB lanes

BILL OF MATERIAL

ITEM	UNIT	QUANTITY
Concrete Sealer	Sq Ft	383
Epoxy Crack Injection	Foot	3
Structural Repair Of Concrete (Depth Equal To Or Less Than 5 Inches)	Sq Ft	171
Structural Repair Of Concrete (Depth Greater Than 5 Inches)	Sq Ft	16

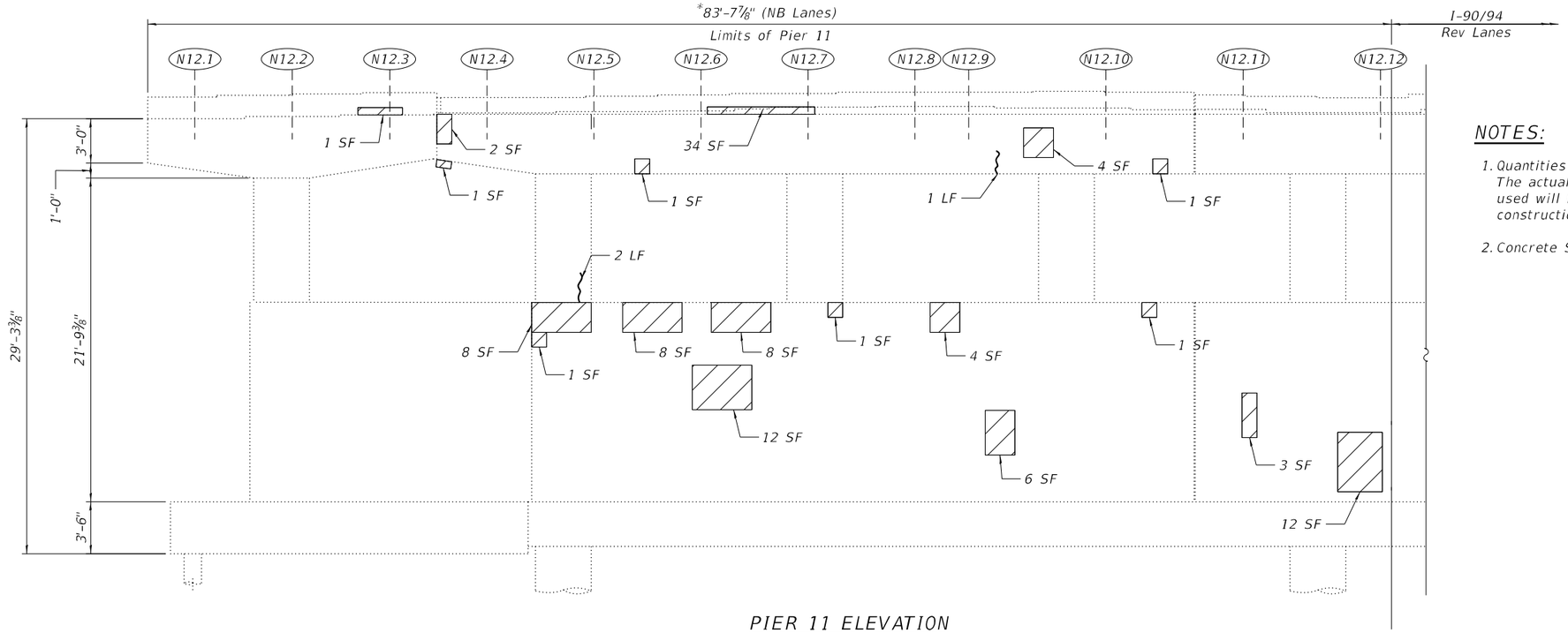

PIER 11 ELEVATION

(Looking South)

NOTES:

1. Quantities and limits shown are estimated for bidding purpose only. The actual areas to be repaired and the type(s) of repairs to be used will be determined by the engineer in the field at the time of construction.
2. Concrete Sealer is to be applied to the top of the pier cap.

LEGEND

- Structural Repair of Concrete (Depth Equal to or Less than 5 inches)
- Structural Repair of Concrete (Depth Greater than 5 inches)
- Epoxy Crack Injection (Width > 0.06")
- SF — Square Foot
- LF — Linear Foot

MODEL: Default
FILE NAME: P:\2004-825 PTB195-014 HBM\WO#7 I-90 Various Overlays\Ashland Ave\Sheet Files\016013-62K73-S112-Pier 11 Repairs.dgn

HBM ENGINEERING GROUP, LLC

USER NAME =	DESIGNED - LAB, AMS	REVISED -
	CHECKED - MI	REVISED -
PLOT SCALE =	DRAWN - LAB, AMS	REVISED -
PLOT DATE =	DATE - 4/29/2024	REVISED -

STATE OF ILLINOIS
DEPARTMENT OF TRANSPORTATION

PIER 11 REPAIRS
STRUCTURE NO. 016-0133 (NB)

SHEET S03A-135 OF S03A-148 SHEETS

F.A.I. RTE.	SECTION	COUNTY	TOTAL SHEETS	SHEET NO.
90/94	2020-005-BR	COOK	908	463

CONTRACT NO. 62K73

ILLINOIS FED. AID PROJECT

4/30/2024 3:25:24 PM

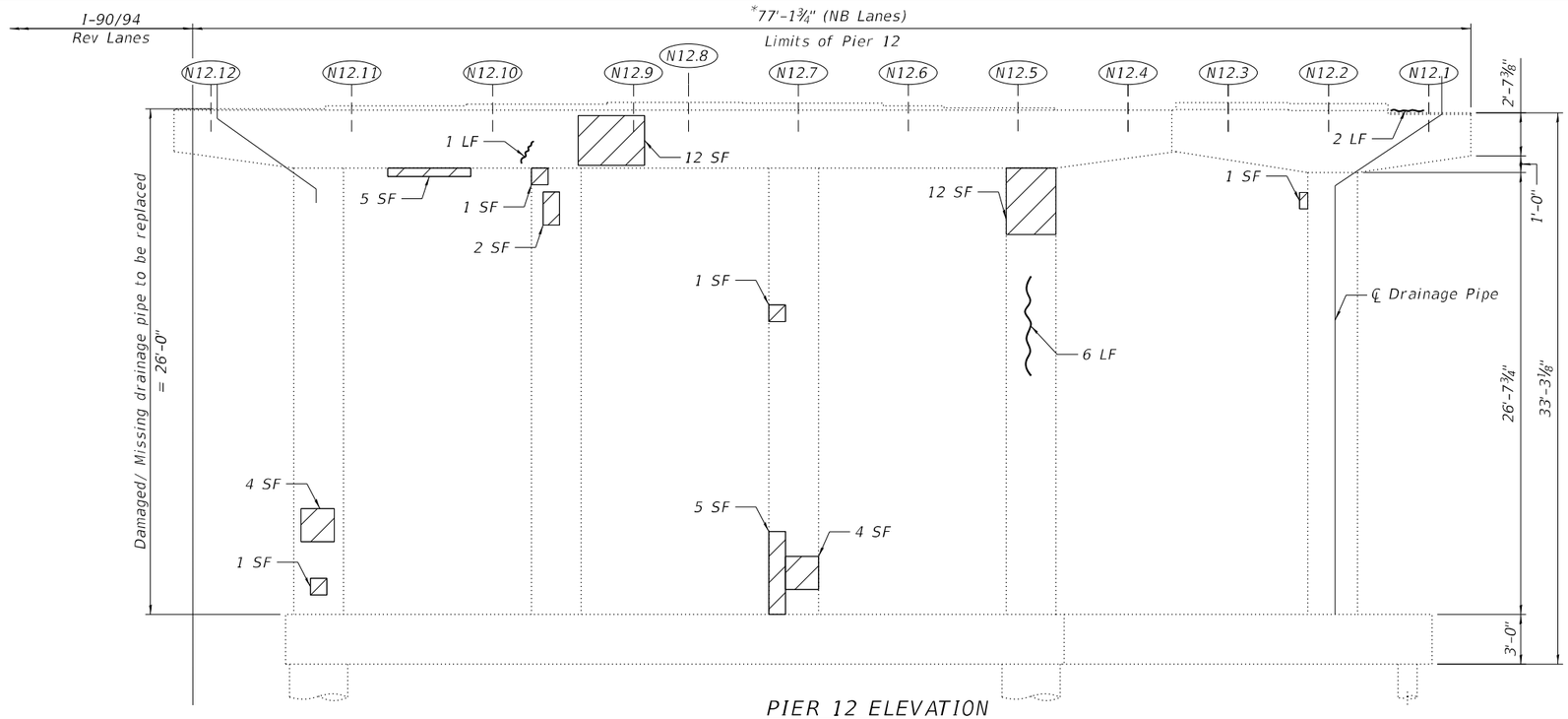

PIER 12 ELEVATION

(Looking North)

*Length measured perpendicular to the centerline of the NB lanes

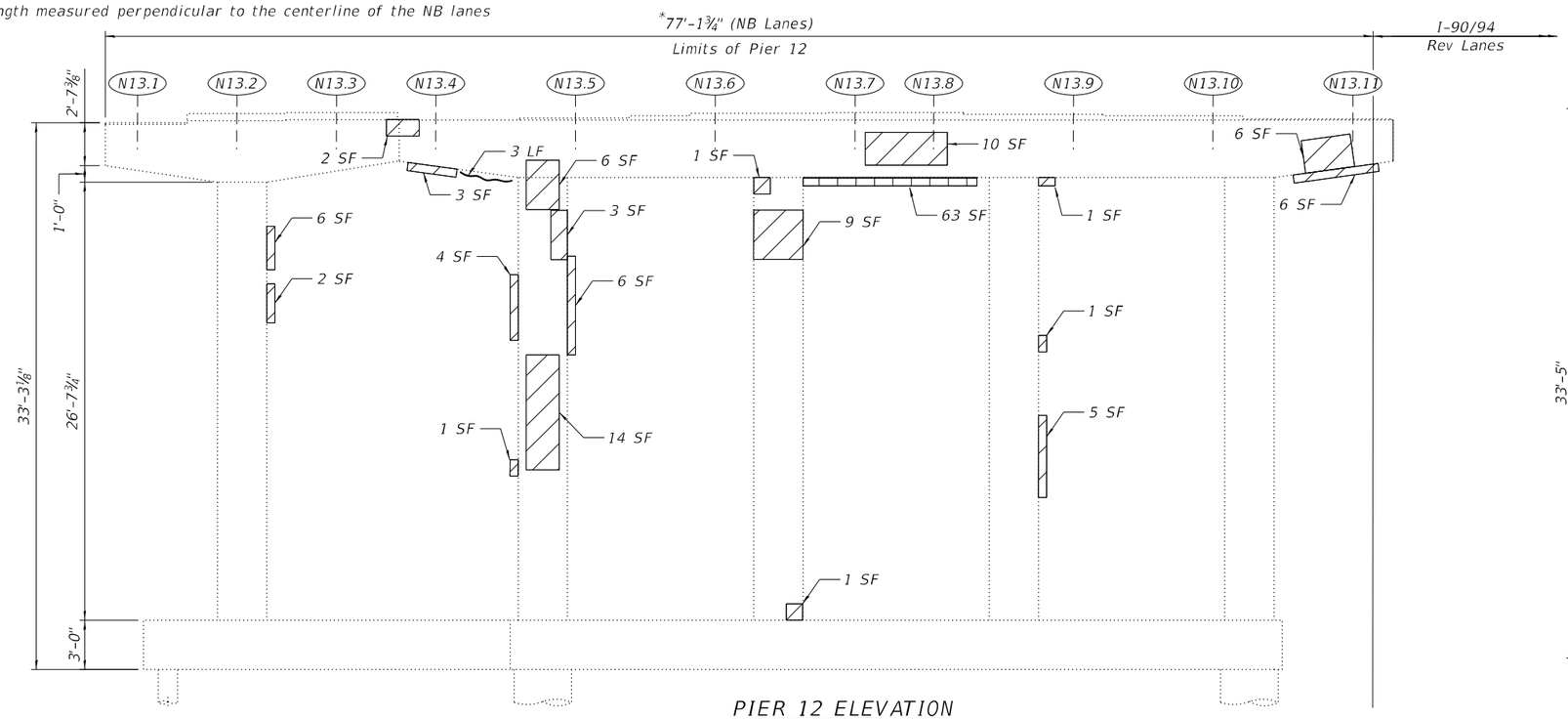

PIER 12 ELEVATION

(Looking South)

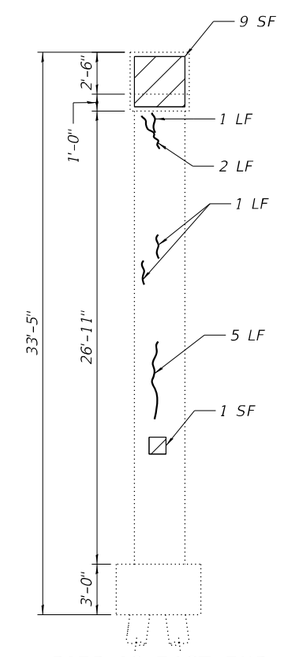

PIER 12 EAST END

(Looking West)

BILL OF MATERIAL

ITEM	UNIT	QUANTITY
Concrete Sealer	Sq Ft	273
Epoxy Crack Injection	Foot	22
Bridge Drainage System Repair	Foot	26
Structural Repair Of Concrete (Depth Equal To Or Less Than 5 Inches)	Sq Ft	144
Structural Repair Of Concrete (Depth Greater Than 5 Inches)	Sq Ft	63

PIER 12 - WEST END

(Looking North)

NOTES:

1. Quantities and limits shown are estimated for bidding purpose only. The actual areas to be repaired and the type(s) of repairs to be used will be determined by the engineer in the field at the time of construction.

2. Concrete Sealer is to be applied to the top of the pier cap.

PIER 12 - EAST END

(Looking North)

LEGEND

- Structural Repair of Concrete (Depth Equal to or Less than 5 inches)
- Structural Repair of Concrete (Depth Greater than 5 inches)
- Epoxy Crack Injection (Width > 0.06")
- SF Square Foot
- LF Linear Foot

MODEL: Default
FILE NAME: P:\2004-825 PTB195-014 HBM\WO#7 I-90 Various Overlays\Ashland Ave\Sheet Files\0160133-62K73-S113-Pier 12 Repairs.dgn
4/30/2024 3:25:29 PM

HBM ENGINEERING GROUP, LLC

USER NAME =	DESIGNED - LAB, AMS	REVISED -	
	CHECKED - MI	REVISED -	
PLOT SCALE =	DRAWN - LAB, AMS	REVISED -	
PLOT DATE =	DATE - 4/29/2024	REVISED -	

STATE OF ILLINOIS
DEPARTMENT OF TRANSPORTATION

PIER 12 REPAIRS
STRUCTURE NO. 016-0133 (NB)

SHEET S03A-136 OF S03A-148 SHEETS

F.A.I. RTE.	SECTION	COUNTY	TOTAL SHEETS	SHEET NO.
90/94	2020-005-BR	COOK	908	464
		CONTRACT NO. 62K73		
	ILLINOIS	FED. AID PROJECT		

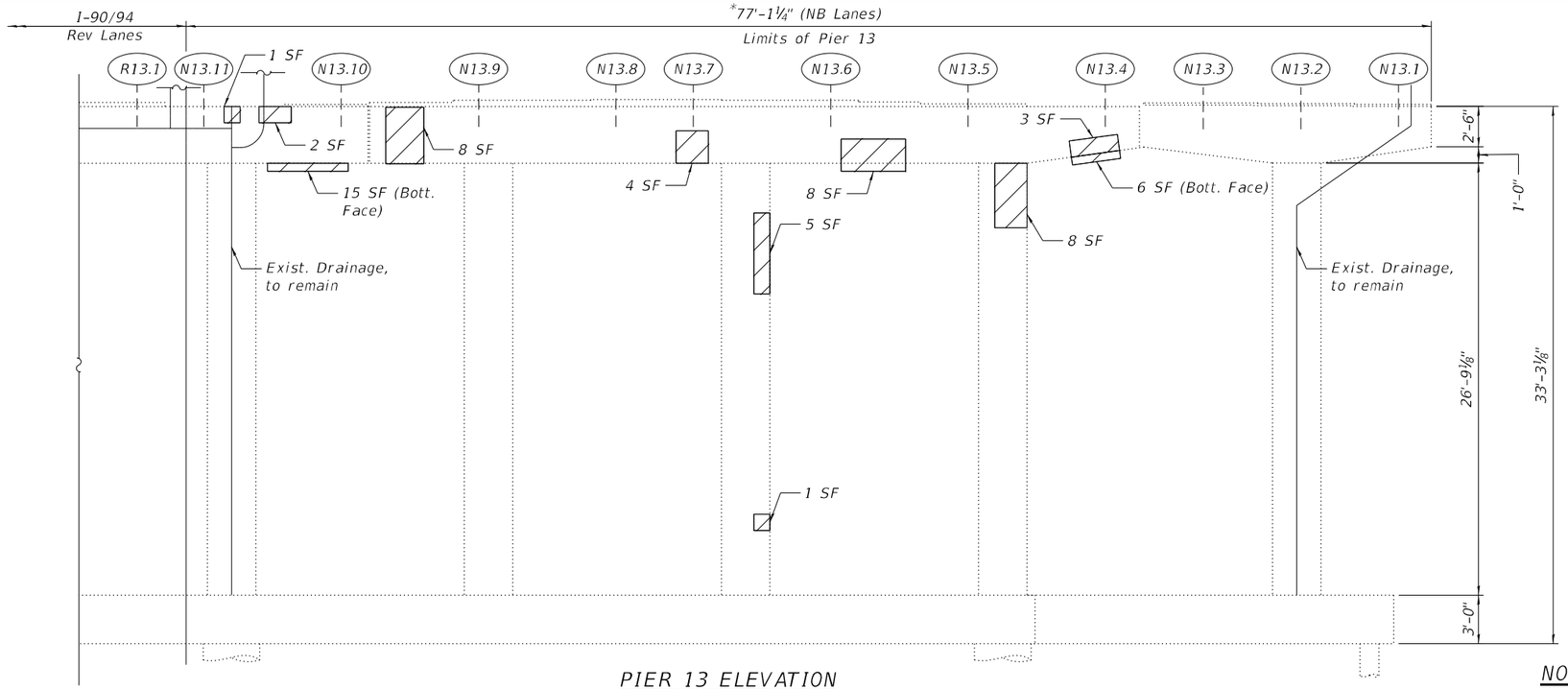

PIER 13 ELEVATION

(Looking North)

BILL OF MATERIAL

ITEM	UNIT	QUANTITY
Concrete Sealer	Sq Ft	281
Epoxy Crack Injection	Foot	1
Structural Repair Of Concrete (Depth Equal To Or Less Than 5 Inches)	Sq Ft	121
Structural Repair Of Concrete (Depth Greater Than 5 Inches)	Sq Ft	6

*Length is measured perpendicular to the centerline of the NB lanes.

PIER 12 - WEST END

(Looking North)

NOTES:

1. Quantities and limits shown are estimated for bidding purpose only. The actual areas to be repaired and the type(s) of repairs to be used will be determined by the engineer in the field at the time of construction.
2. Concrete Sealer is to be applied to top of the pier cap.

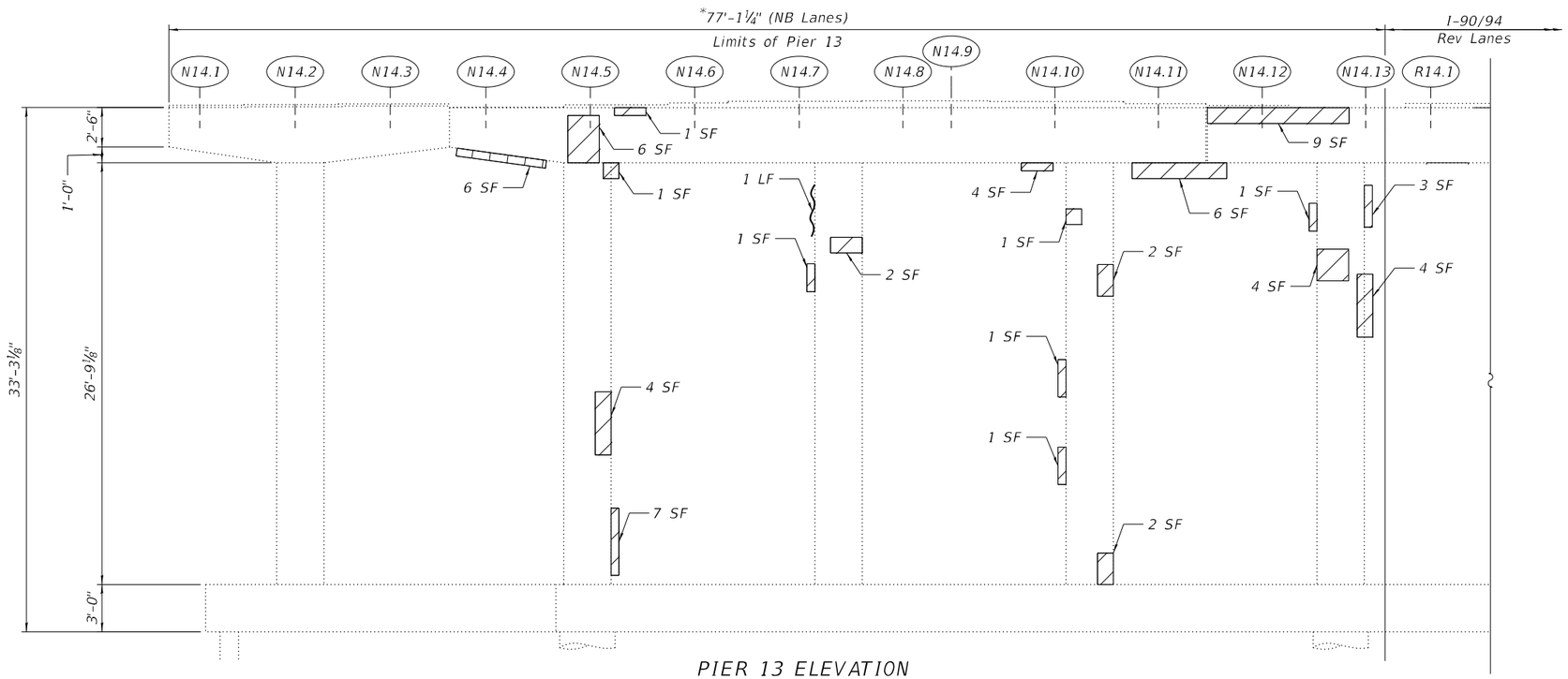

PIER 13 ELEVATION

(Looking South)

PIER 13 - EAST END

(Looking Northeast)

LEGEND

- Structural Repair of Concrete (Depth Equal to or Less than 5 inches)
- Structural Repair of Concrete (Depth Greater than 5 inches)
- Epoxy Crack Injection (Width > 0.06")
- SF — Square Foot
- LF — Linear Foot

MODEL: Default
FILE NAME: P:\2004-823 PTB195-014 HBM\WO#7 I-90 Various Overlays\Ashland Ave\Sheet Files\0160133-62K73-S114-Pier 13 Repairs.dgn
4/30/2024 3:25:34 PM

HBM ENGINEERING GROUP, LLC

USER NAME =	DESIGNED - LAB, AMS	REVISED -	
	CHECKED - MI	REVISED -	
PLOT SCALE =	DRAWN - LAB, AMS	REVISED -	
PLOT DATE =	DATE - 4/29/2024	REVISED -	

STATE OF ILLINOIS
DEPARTMENT OF TRANSPORTATION

PIER 13 REPAIRS
STRUCTURE NO. 016-0133 (NB)

SHEET S03A-137 OF S03A-148 SHEETS

F.A.I. RTE.	SECTION	COUNTY	TOTAL SHEETS	SHEET NO.
90/94	2020-005-BR	COOK	908	465

CONTRACT NO. 62K73

ILLINOIS | FED. AID PROJECT

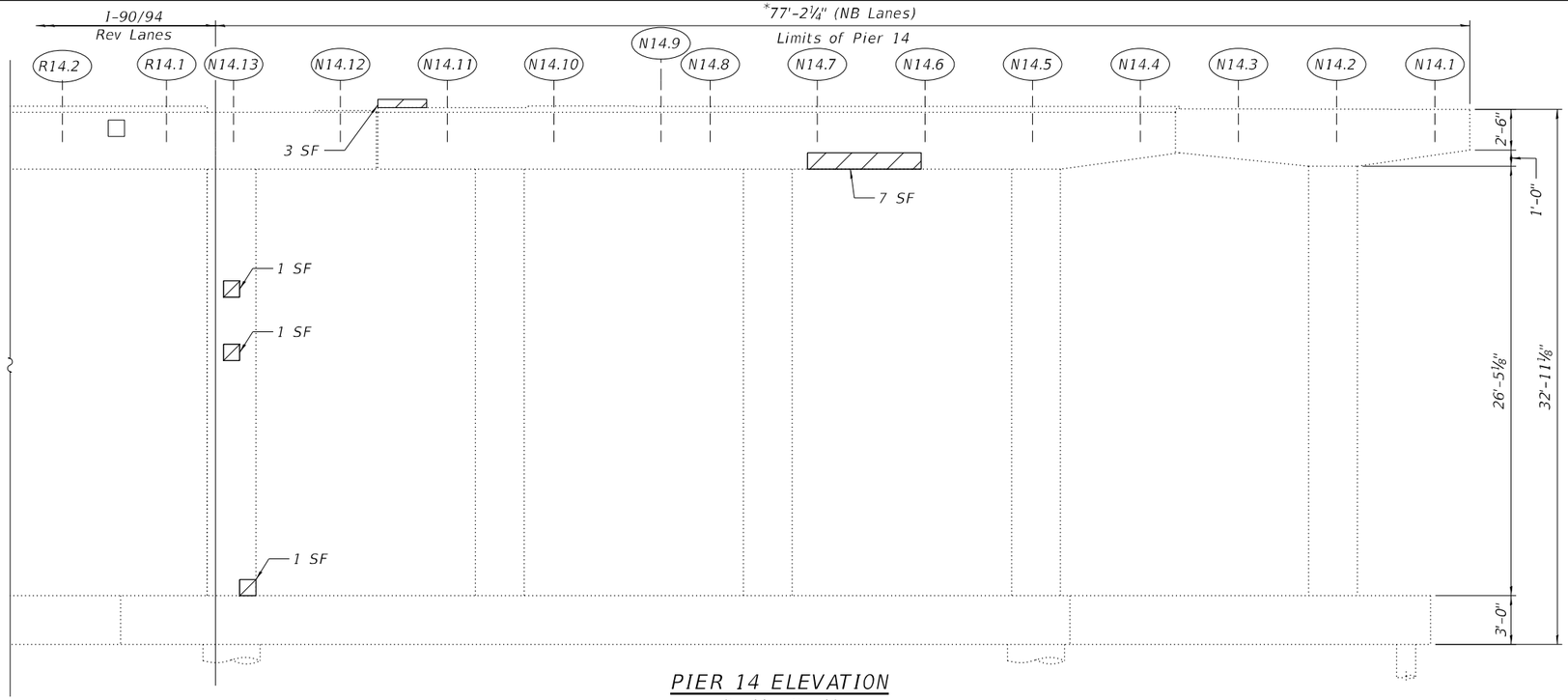

PIER 14 ELEVATION
(Looking North)

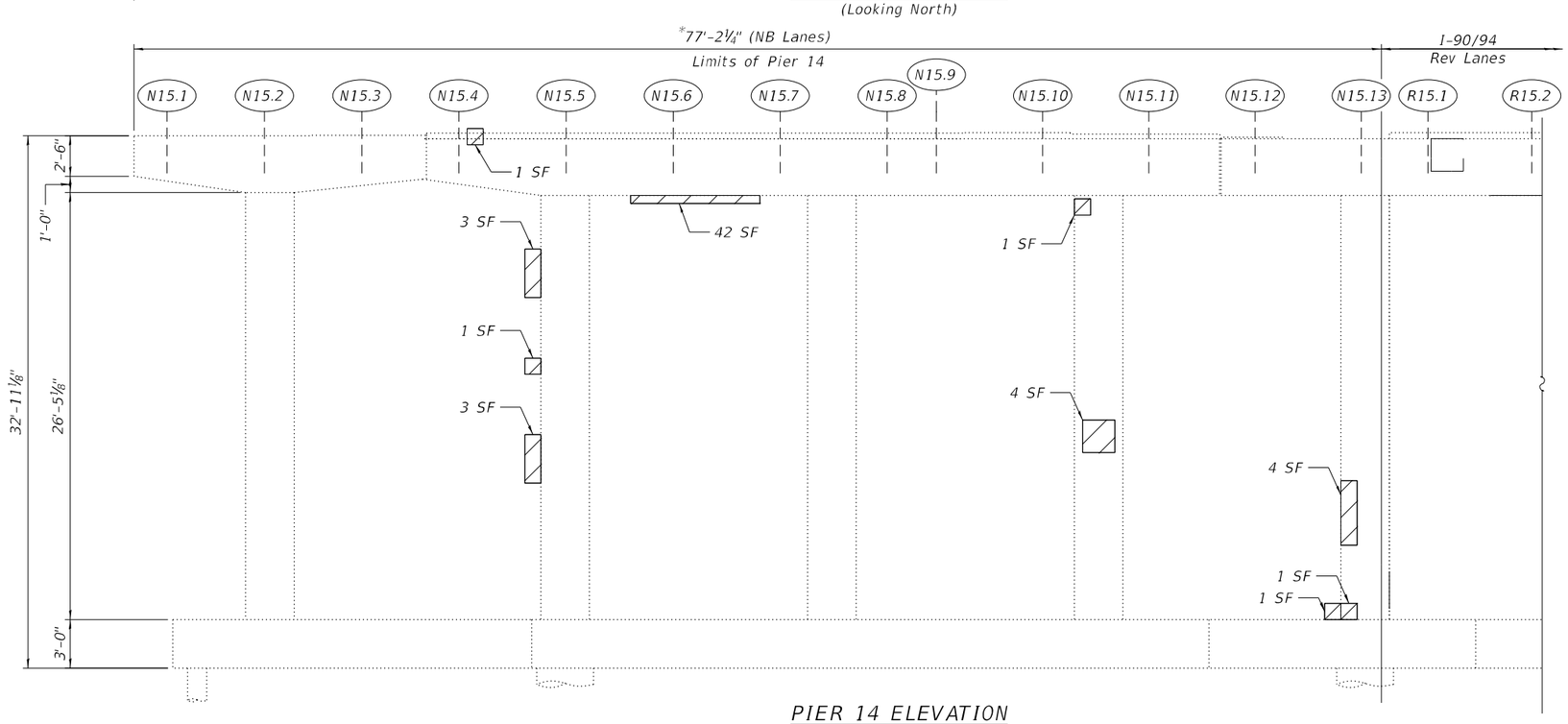

PIER 14 ELEVATION
(Looking South)

BILL OF MATERIAL

ITEM	UNIT	QUANTITY
Structural Repair Of Concrete (Depth Equal To Or Less Than 5 Inches)	Sq Ft	74

NOTE:

1. Quantities and limits shown are estimated for bidding purpose only. The actual areas to be repaired and the type(s) of repairs to be used will be determined by the engineer in the field at the time of construction.

*Length is measured perpendicular to the centerline of the NB lanes.

LEGEND

Structural Repair of Concrete (Depth Equal to or Less than 5 inches)

SF Square Foot

HBM ENGINEERING GROUP, LLC

USER NAME =	DESIGNED - LAB, AMS	REVISED -
	CHECKED - MI	REVISED -
PLOT SCALE =	DRAWN - LAB, AMS	REVISED -
PLOT DATE =	DATE - 4/29/2024	REVISED -

STATE OF ILLINOIS
DEPARTMENT OF TRANSPORTATION

PIER 14 REPAIRS
STRUCTURE NO. 016-0133 (NB)

SHEET S03A-138 OF S03A-148 SHEETS

F.A.I. RTE.	SECTION	COUNTY	TOTAL SHEETS	SHEET NO.
90/94	2020-005-BR	COOK	908	466

CONTRACT NO. 62K73

ILLINOIS | FED. AID PROJECT

MODEL: Default
FILE NAME: P:\2004-825 PTB195-014 HBM\WO#7 I-90 Various Overlays\Ashland Ave\Sheet Files\0160133-62K73-S115-Pier 14 Repairs.dgn
4/30/2024 3:25:40 PM

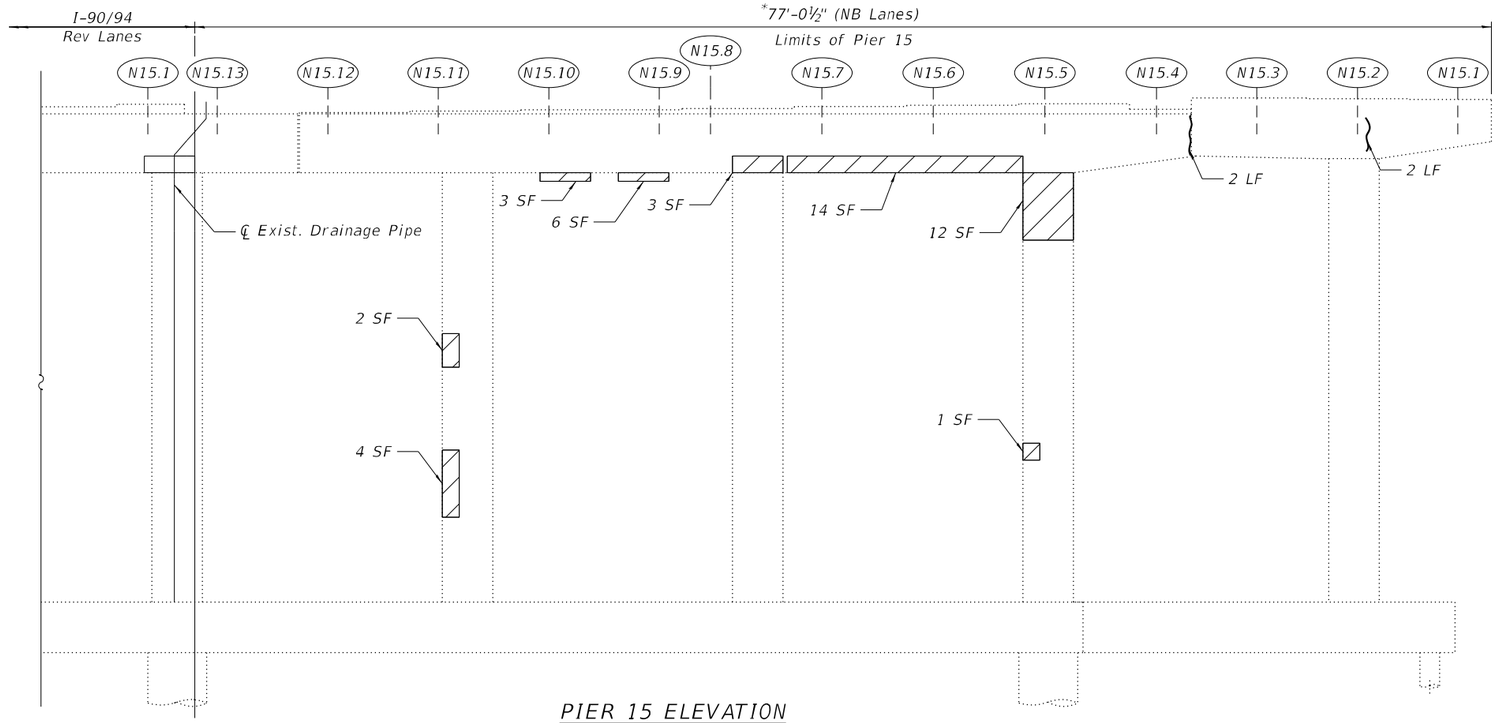

PIER 15 ELEVATION

(Looking North)

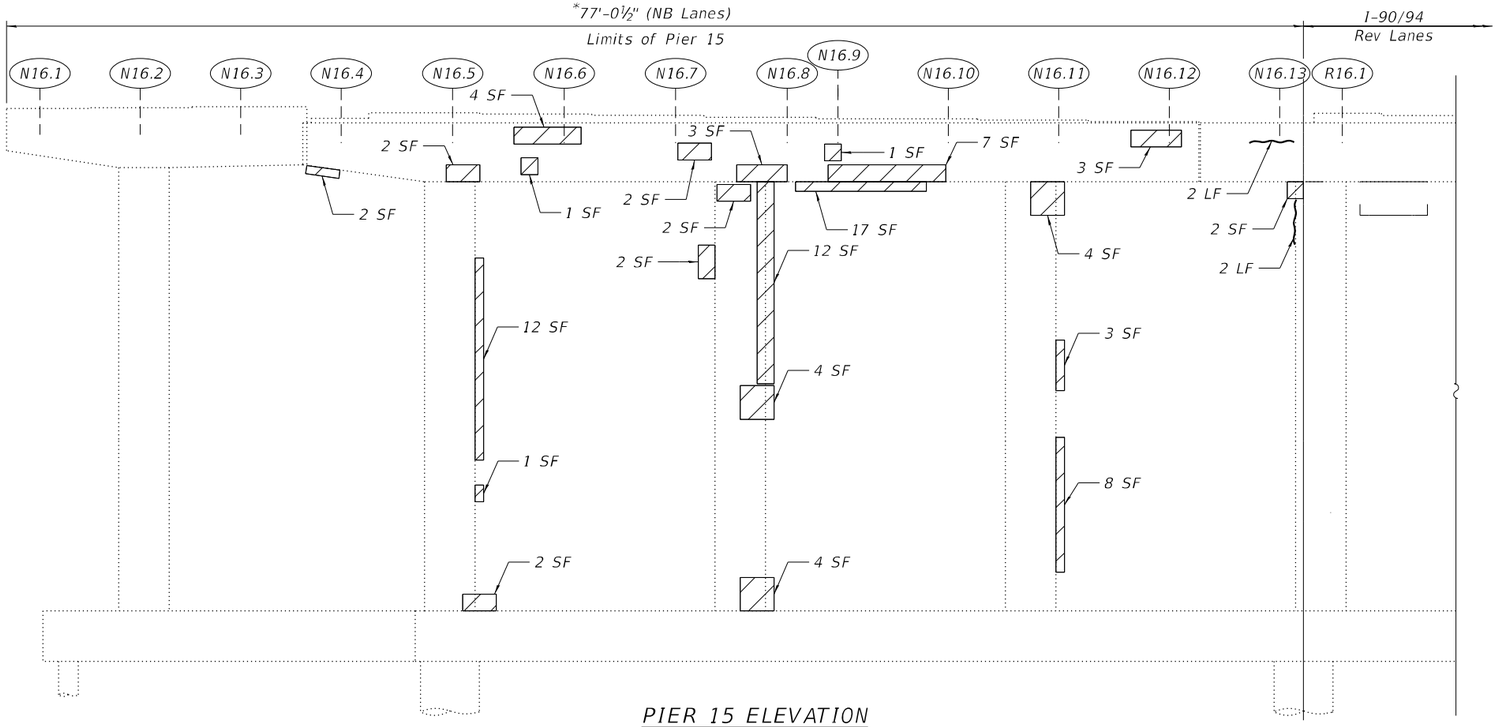

PIER 15 ELEVATION

(Looking South)

BILL OF MATERIAL

ITEM	UNIT	QUANTITY
Concrete Sealer	Sq Ft	273
Epoxy Crack Injection	Foot	8
Structural Repair Of Concrete (Depth Equal To Or Less Than 5 Inches)	Sq Ft	143

PIER 15 - WEST END

(Looking North)

NOTES:

1. Quantities and limits shown are estimated for bidding purpose only. The actual areas to be repaired and the type(s) of repairs to be used will be determined by the engineer in the field at the time of construction.

2. Concrete Sealers is to be applied to the top of the pier cap.

*Length is measured perpendicular to the centerline of the NB lanes.

LEGEND

Structural Repair of Concrete (Depth Equal to or Less than 5 inches)

Epoxy Crack Injection (Width > 0.06")

SF Square Foot

LF Linear Foot

MODEL: Default
FILE NAME: P:\2004-825 PTB195-014 HBM\WO#7 I-90 Various Overlays\Ashland Ave\Sheet Files\0160133-62K73-S116-Pier 15 Repairs.dgn
4/30/2024 3:25:45 PM

HBM ENGINEERING GROUP, LLC	USER NAME =	DESIGNED - LAB, AMS	REVISED -
		CHECKED - MI	REVISED -
	PLOT SCALE =	DRAWN - LAB, AMS	REVISED -
	PLOT DATE =	DATE - 4/29/2024	REVISED -

STATE OF ILLINOIS
DEPARTMENT OF TRANSPORTATION

PIER 15 REPAIRS
STRUCTURE NO. 016-0133 (NB)

SHEET S03A-139 OF S03A-148 SHEETS

F.A.I. RTE.	SECTION	COUNTY	TOTAL SHEETS	SHEET NO.
90/94	2020-005-BR	COOK	908	467
		CONTRACT NO. 62K73		
		ILLINOIS FED. AID PROJECT		

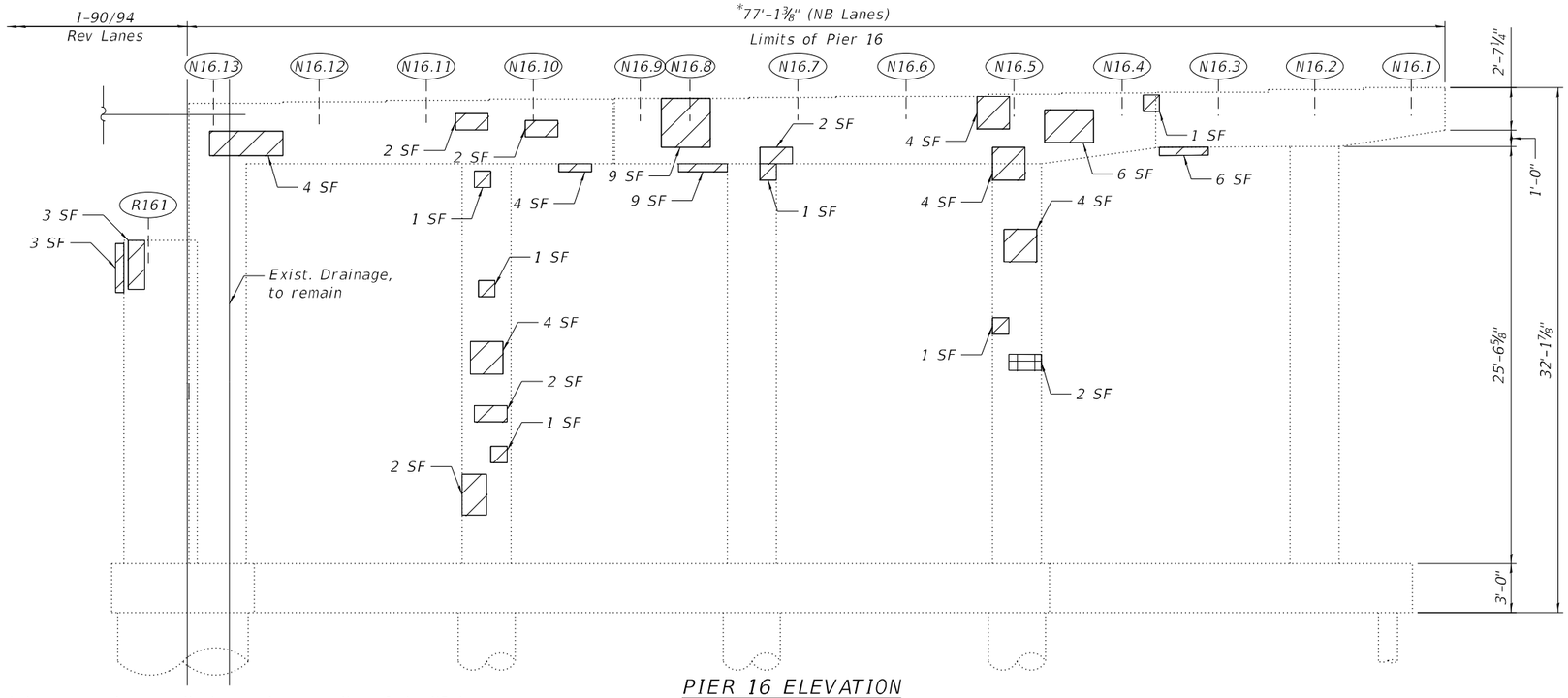

*Length is measured perpendicular to the centerline of the NB lanes.

PIER 16 ELEVATION

(Looking North)

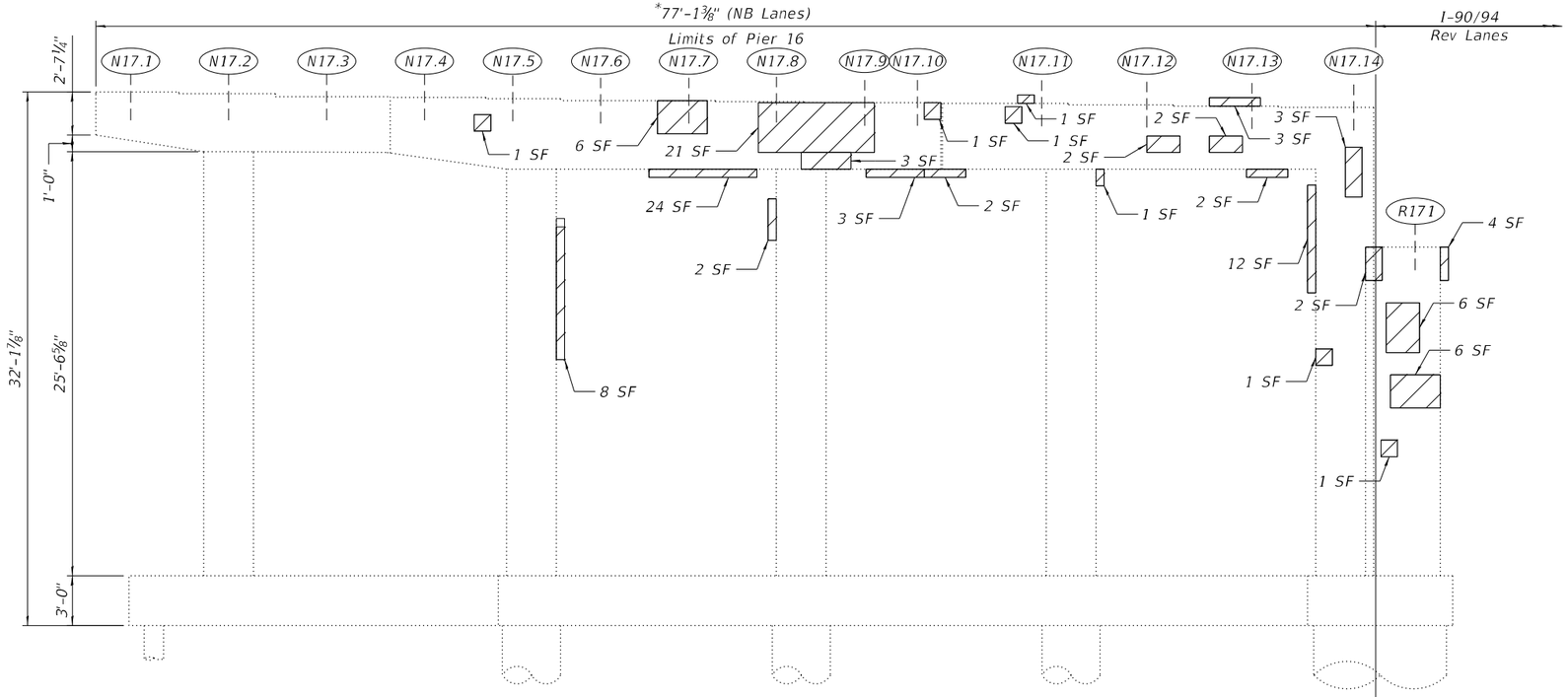

PIER 16 ELEVATION

(Looking South)

BILL OF MATERIAL

ITEM	UNIT	QUANTITY
Concrete Sealer	Sq Ft	273
Structural Repair Of Concrete (Depth Equal To Or Less Than 5 Inches)	Sq Ft	194
Structural Repair Of Concrete (Depth Greater Than 5 Inches)	Sq Ft	2

PIER 16 - WEST END

(Looking North)

NOTES:

1. Quantities and limits shown are estimated for bidding purpose only. The actual areas to be repaired and the type(s) of repairs to be used will be determined by the engineer in the field at the time of construction.

2. Concrete Sealer is to be applied to the top of the pier cap.

LEGEND

Structural Repair of Concrete (Depth Equal to or Less than 5 inches)

Structural Repair of Concrete (Depth Greater than 5 inches)

SF — Square Foot

MODEL: Default
FILE NAME: P:\2004825 PTB195-014 HBM\WO#7 I-90 Various Overlays\Ashland Ave\Sheet Files\0160133-62K73-S117-Pier 16 Repairs.dgn

HBM ENGINEERING GROUP, LLC

USER NAME =	DESIGNED - LAB, AMS	REVISED -	
	CHECKED - MI	REVISED -	
PLOT SCALE =	DRAWN - LAB, AMS	REVISED -	
PLOT DATE =	DATE - 4/29/2024	REVISED -	

STATE OF ILLINOIS
DEPARTMENT OF TRANSPORTATION

PIER 16 REPAIRS
STRUCTURE NO. 016-0133 (NB)

SHEET S03A-140 OF S03A-148 SHEETS

F.A.I. RTE.	SECTION	COUNTY	TOTAL SHEETS	SHEET NO.
90/94	2020-005-BR	COOK	908	468
		CONTRACT NO. 62K73		
		ILLINOIS	FED. AID PROJECT	

4/30/2024 3:25:50 PM

NOTES:

1. Quantities and limits shown are estimated for bidding purpose only. The actual areas to be repaired and the type(s) of repairs to be used will be determined by the engineer in the field at the time of construction.
2. Concrete sealer is to be applied to the top of the pier cap.

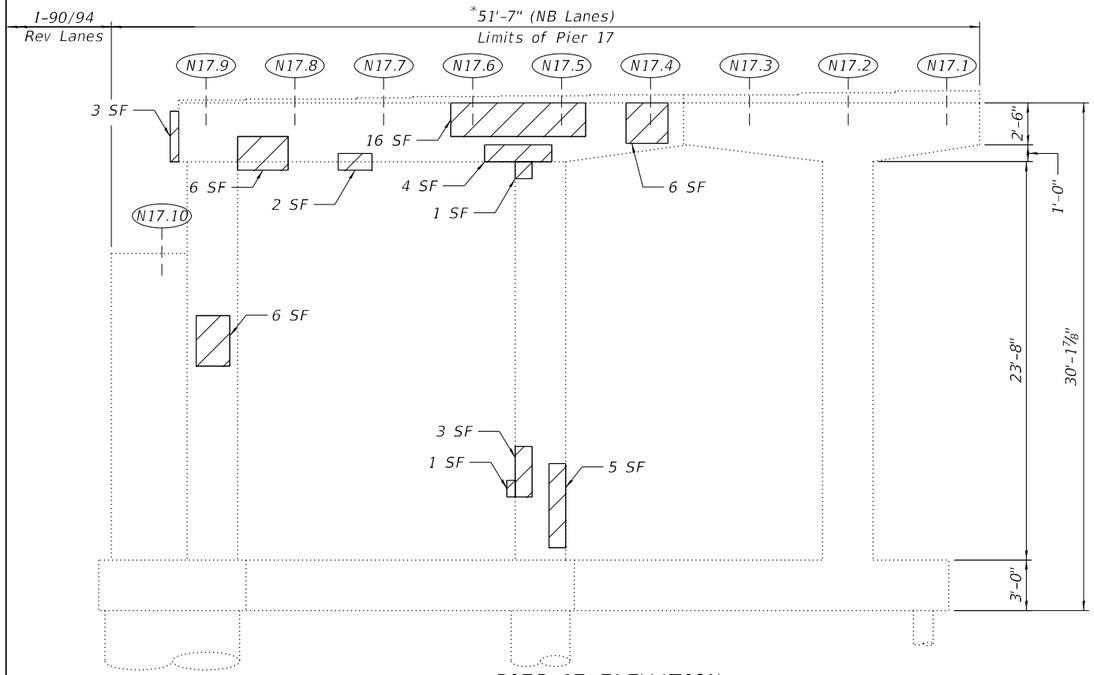

PIER 17 ELEVATION
(Looking North)

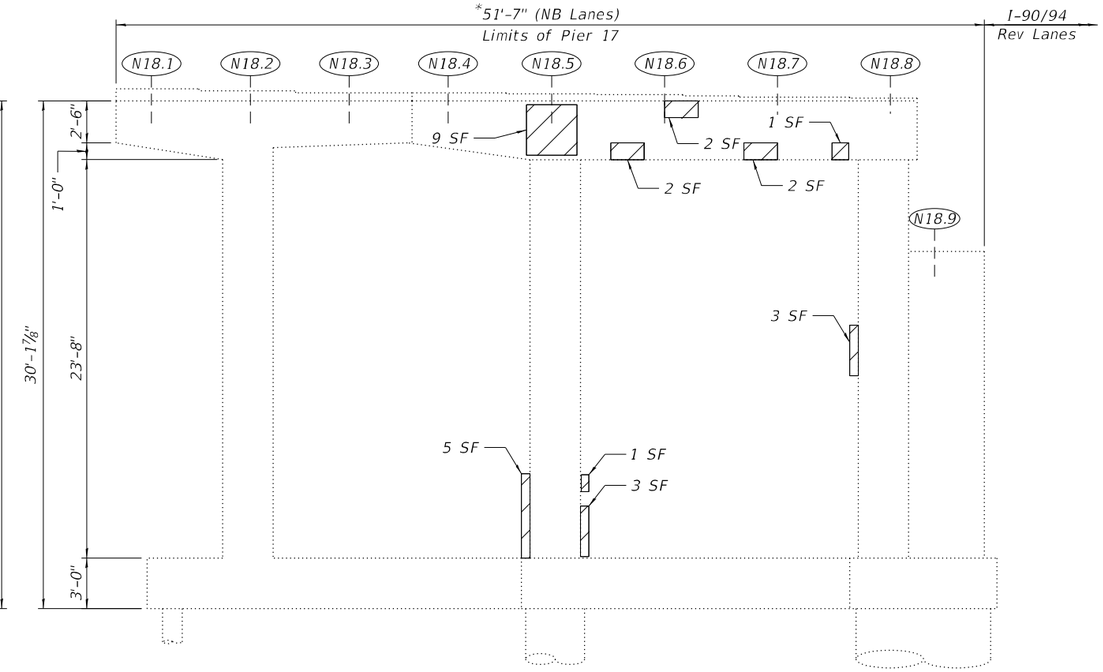

PIER 17 ELEVATION
(Looking South)

*Length is measured perpendicular to the centerline of the NB lanes.

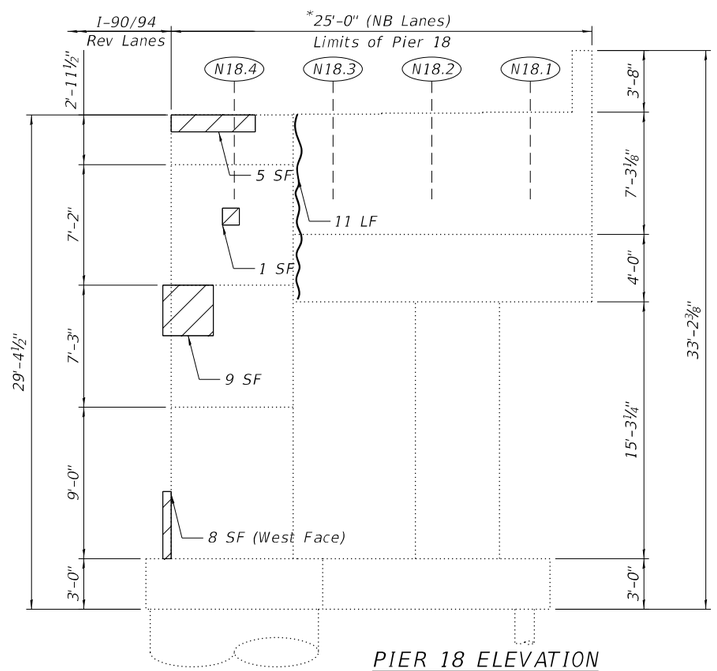

PIER 18 ELEVATION
(Looking North)

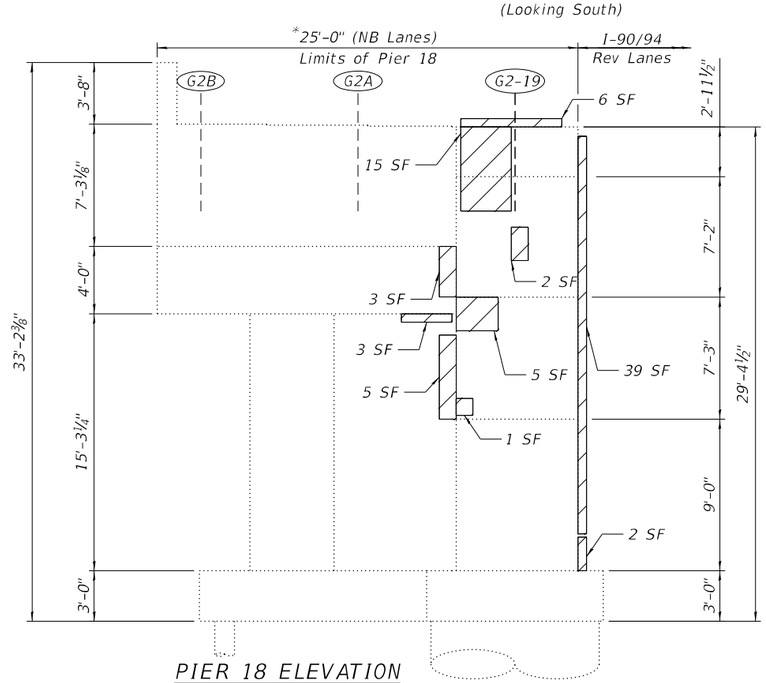

PIER 18 ELEVATION
(Looking South)

PIER 17 BILL OF MATERIAL

ITEM	UNIT	QUANTITY
Concrete Sealer	Sq Ft	175
Structural Repair Of Concrete (Depth Equal To Or Less Than 5 Inches)	Sq Ft	81

PIER 18 BILL OF MATERIAL

ITEM	UNIT	QUANTITY
Concrete Sealer	Sq Ft	180
Epoxy Crack Injection	Foot	11
Structural Repair Of Concrete (Depth Equal To Or Less Than 5 Inches)	Sq Ft	104

LEGEND

Structural Repair of Concrete (Depth Equal to or Less than 5 inches)

Epoxy Crack Injection (Width > 0.06")

SF Square Foot

LF Linear Foot

MODEL: Default
FILE NAME: P:\2004-825 PTB.195-014 HBM\WO#7 I-90 Various Overlays\Ashland Ave\Sheet Files\0160133-62K73-S118-Pier 17-18 Repairs.dgn
4/30/2024 3:25:58 PM

HBM ENGINEERING GROUP, LLC

USER NAME =	DESIGNED - LAB, AMS	REVISED -	
	CHECKED - MI	REVISED -	
PLOT SCALE =	DRAWN - LAB, AMS	REVISED -	
PLOT DATE =	DATE - 4/29/2024	REVISED -	

STATE OF ILLINOIS
DEPARTMENT OF TRANSPORTATION

PIER 17 AND PIER 18 REPAIRS
STRUCTURE NO. 016-0133 (NB)

SHEET S03A-141 OF S03A-148 SHEETS

F.A.I. RTE.	SECTION	COUNTY	TOTAL SHEETS	SHEET NO.
90/94	2020-005-BR	COOK	908	469

CONTRACT NO. 62K73

ILLINOIS FED. AID PROJECT

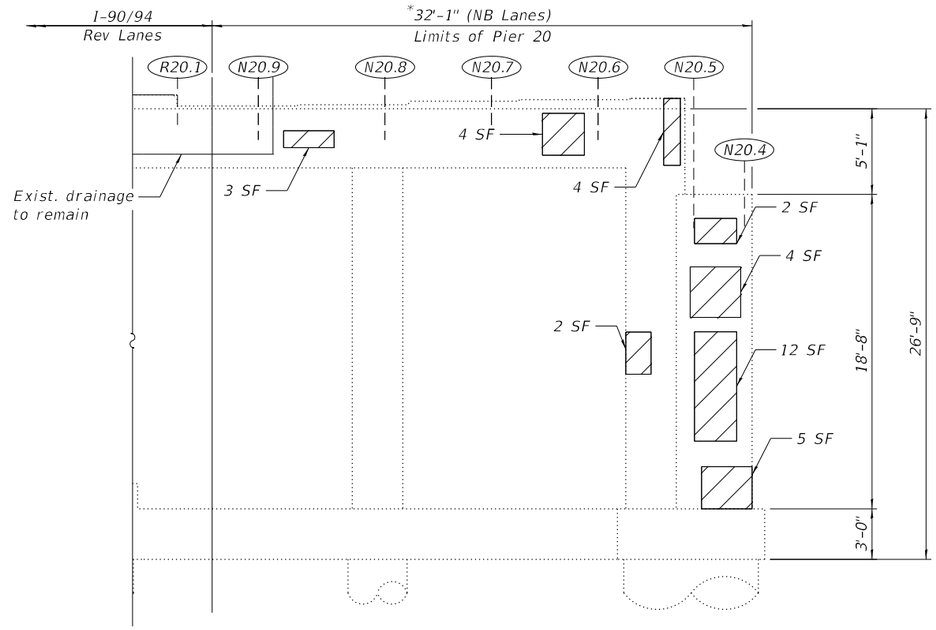

*Length is measured perpendicular to the centerline of the NB lanes.

PIER 20 ELEVATION

(Looking North)

BILL OF MATERIAL

ITEM	UNIT	QUANTITY
Concrete Sealer	Sq Ft	105
Structural Repair Of Concrete (Depth Equal To Or Less Than 5 Inches)	Sq Ft	130

PIER 20

(Looking North)

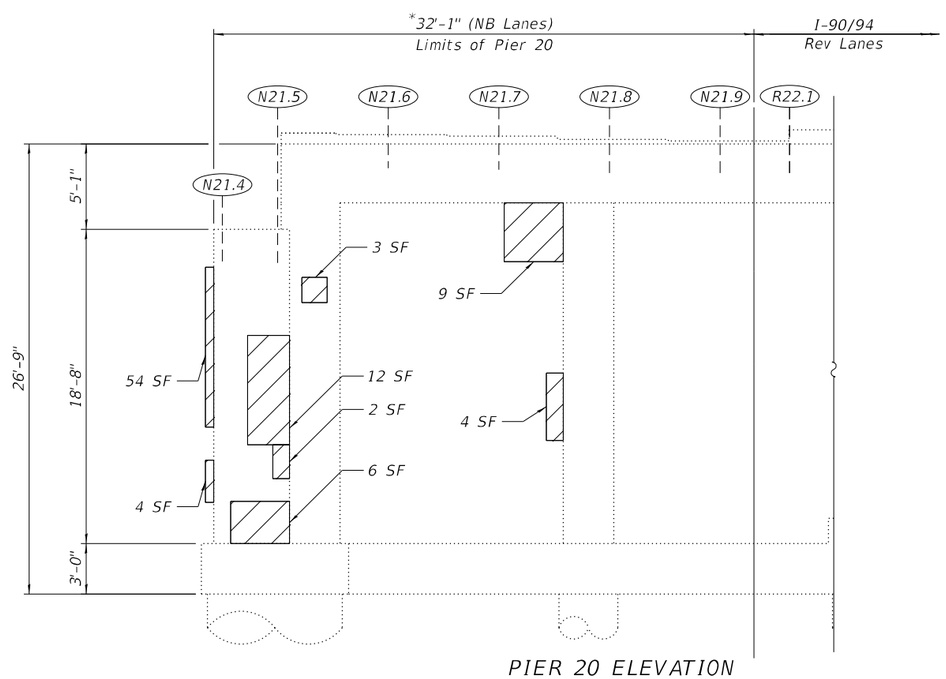

PIER 20 ELEVATION

(Looking South)

NOTES:

1. Quantities and limits shown are estimated for bidding purpose only. The actual areas to be repaired and the type(s) of repairs to be used will be determined by the engineer in the field at the time of construction.
2. Concrete Sealer is to be applied to the top of the pier cap.

LEGEND

Structural Repair of Concrete (Depth Equal to or Less than 5 inches)

SF Square Foot

MODEL: Default
FILE NAME: P:\2004-825 PTB195-014 HBM\WO#7 I-90 Various Overlays\Ashland Ave\Sheet Files\0160133-62K73-S119-Pier 20 Repairs.dgn

HBM ENGINEERING GROUP, LLC

USER NAME =	DESIGNED - LAB, AMS	REVISED -	
	CHECKED - MI	REVISED -	
PLOT SCALE =	DRAWN - LAB, AMS	REVISED -	
PLOT DATE =	DATE - 4/29/2024	REVISED -	

STATE OF ILLINOIS
DEPARTMENT OF TRANSPORTATION

PIER 20 REPAIRS
STRUCTURE NO. 016-0133 (NB)

SHEET S03A-142 OF S03A-148 SHEETS

F.A.I. RTE.	SECTION	COUNTY	TOTAL SHEETS	SHEET NO.
90/94	2020-005-BR	COOK	908	470
		CONTRACT NO. 62K73		
	ILLINOIS	FED. AID PROJECT		

4/30/2024 3:26:03 PM

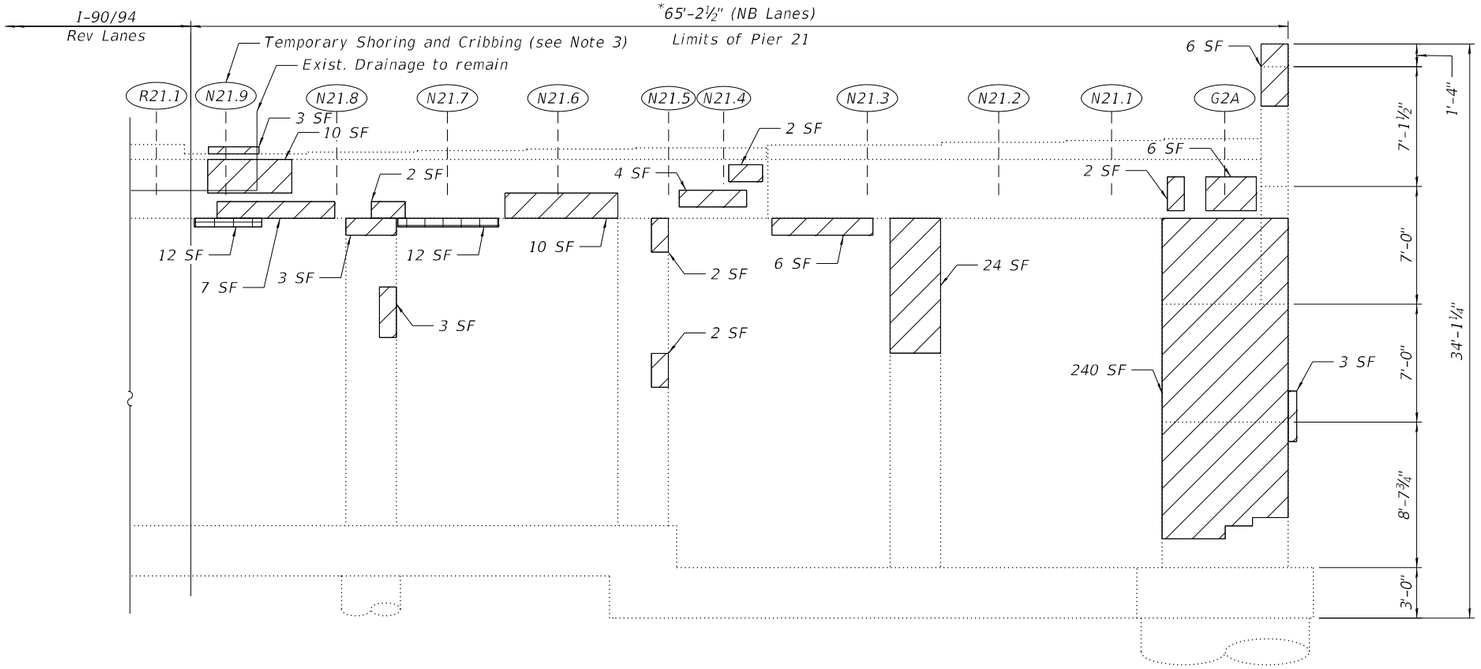

PIER 21 ELEVATION

(Looking North)

*Length measured perpendicular to the centerline of the NB lanes.

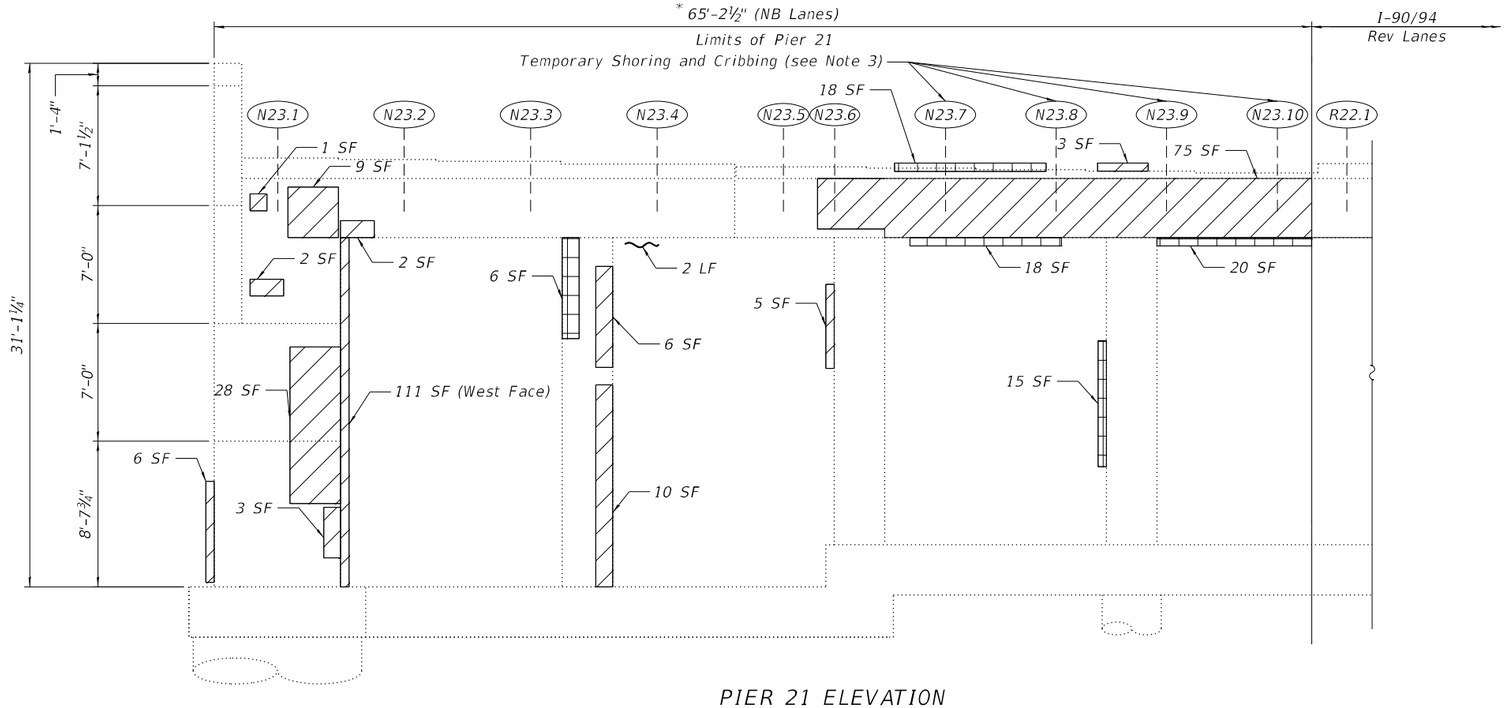

PIER 21 ELEVATION

(Looking South)

BILL OF MATERIAL

ITEM	UNIT	QUANTITY
Concrete Sealer	Sq Ft	231
Epoxy Crack Injection	Foot	2
Structural Repair Of Concrete (Depth Equal To Or Less Than 5 Inches)	Sq Ft	596
Structural Repair Of Concrete (Depth Greater Than 5 Inches)	Sq Ft	101
Temporary Shoring And Cribbing	Each	5

PIER 21

(Looking North)

NOTES:

1. Quantities and limits shown are estimated for bidding purpose only. The actual areas to be repaired and the type(s) of repairs to be used will be determined by the engineer in the field at the time of construction.
2. Concrete Sealer is to be applied to the top of the pier cap.
3. Temporary shoring and cribbing shall be installed prior to the start of the structural repair of concrete and shall be removed after completing the structural repair of concrete.

SUMMARY OF REACTIONS		Pier 21, Spans 21 & 23
R DL	(k)	32.7
R LL	(k)	49.6
R IM	(k)	13.5
R Total	(k)	95.8

LEGEND

- Structural Repair of Concrete (Depth Equal to or Less than 5 inches)
- Structural Repair of Concrete (Depth Greater than 5 inches)
- Epoxy Crack Injection (Width > 0.06")
- SF — Square Foot
- LF — Linear Foot

MODEL: Default
FILE NAME: P:\2004-825 PTB195-014 HBM\WO#7 I-90 Various Overlays\Ashland Ave\Sheet Files\0160133-62K73-S120-Pier 21 Repairs.dgn
4/30/2024 3:26:09 PM

HBM ENGINEERING GROUP, LLC

USER NAME =	DESIGNED - LAB, AMS	REVISED -
	CHECKED - MI	REVISED -
PLOT SCALE =	DRAWN - LAB, AMS	REVISED -
PLOT DATE =	DATE - 4/29/2024	REVISED -

STATE OF ILLINOIS
DEPARTMENT OF TRANSPORTATION

PIER 21 REPAIRS
STRUCTURE NO. 016-0133 (NB)
SHEET S03A-143 OF S03A-148 SHEETS

F.A.I. RTE.	SECTION	COUNTY	TOTAL SHEETS	SHEET NO.
90/94	2020-005-BR	COOK	908	471

CONTRACT NO. 62K73
ILLINOIS FED. AID PROJECT

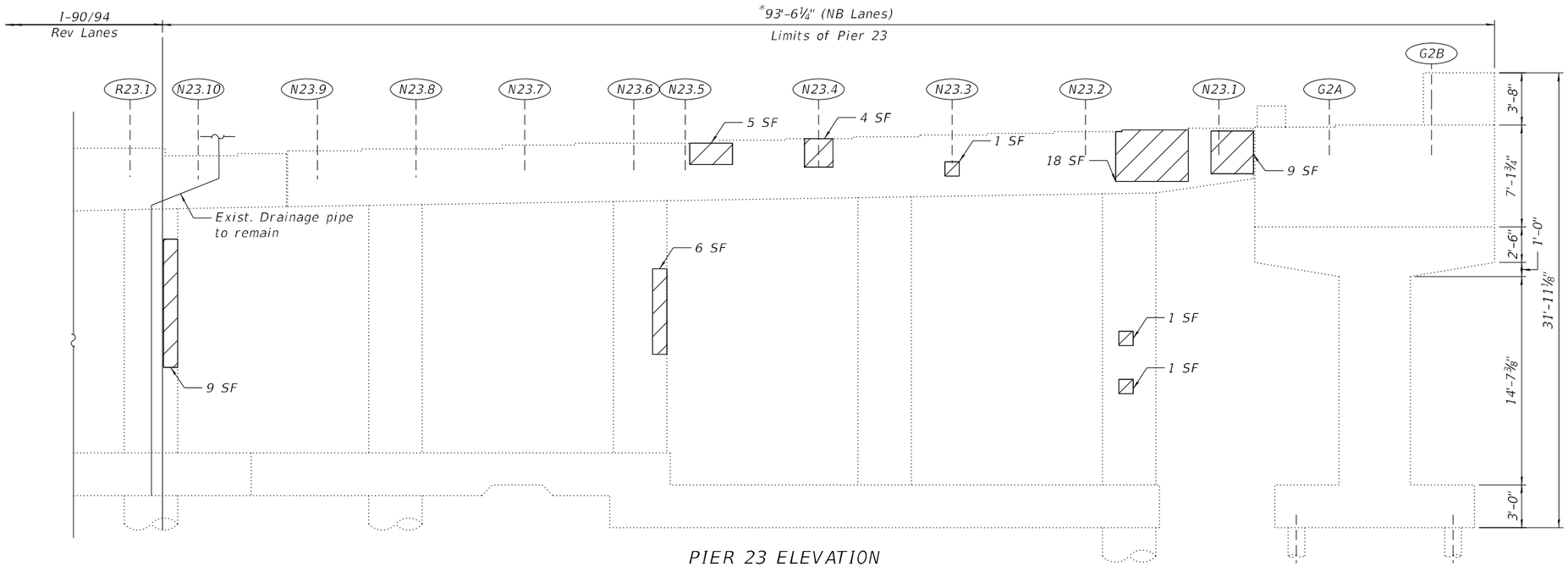

PIER 23 ELEVATION

(Looking North)

*Length measured perpendicular to the centerline of the NB lanes.

BILL OF MATERIAL

ITEM	UNIT	QUANTITY
Concrete Sealer	Sq Ft	440
Epoxy Crack Injection	Foot	13
Structural Repair Of Concrete (Depth Equal To Or Less Than 5 Inches)	Sq Ft	86
Temporary Shoring And Cribbing	Each	2

NOTES:

1. Quantities and limits shown are estimated for bidding purpose only. The actual areas to be repaired and the type(s) of repairs to be used will be determined by the engineer in the field at the time of construction.
2. Temporary shoring and cribbing shall be installed prior to the start of the structural repair of concrete and shall be removed after completing the structural repair of concrete.
3. The cost of Replacing the Nuts at the East and West face of Beams N24.1 and N24.2 will not be paid separately and shall be included with the Structural Repair of Concrete (Depth Equal To or Less Than 5 Inches).
4. Concrete Sealer is to be applied to the top of the pier cap.
5. Reactions provided are for the maximum girder spacing and length within the span indicated. Contractor shall verify loading at each shoring location. Cost included in pay item 'Temporary Shoring and Cribbing.'

SUMMARY OF REACTIONS		
		Pier 23, Span 24
R DL	(k)	70.4
R LL	(k)	37.6
R IM	(k)	9.1
R Total	(k)	117.1

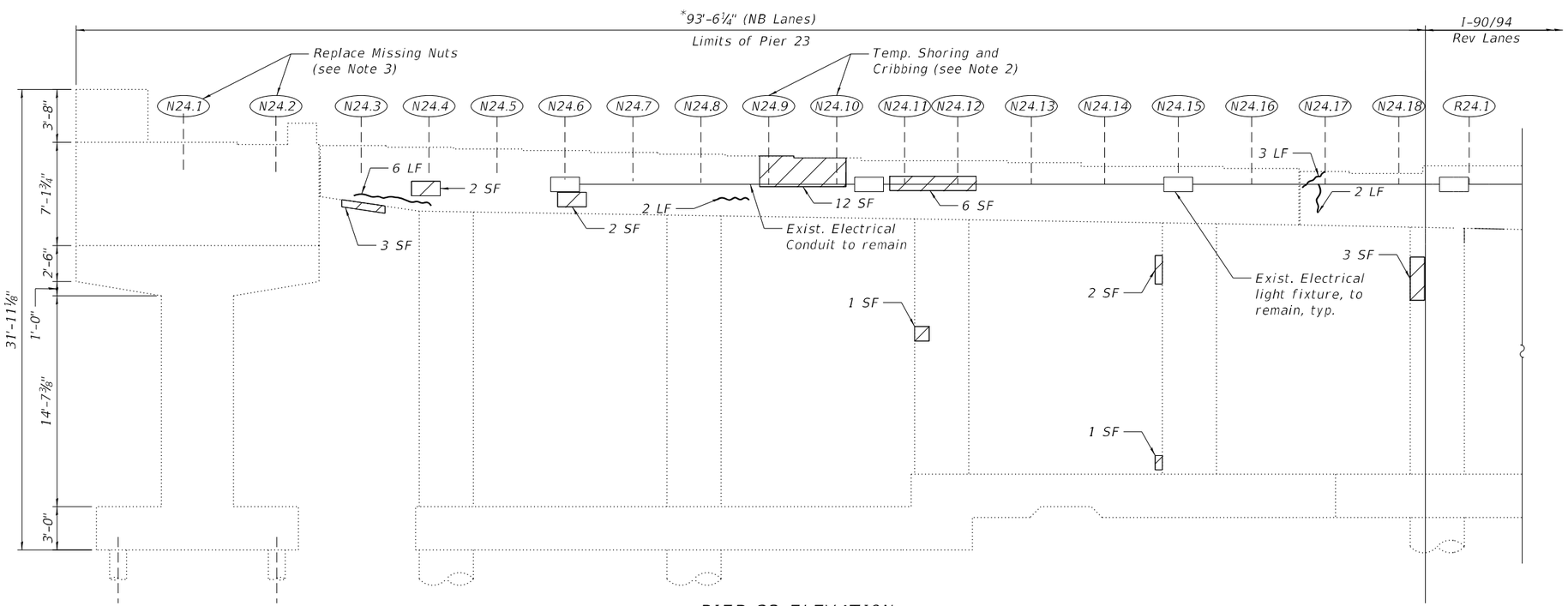

PIER 23 ELEVATION

(Looking South)

PIER 23 - WEST END

(Looking North)

LEGEND

Structural Repair of Concrete (Depth Equal to or Less than 5 inches)

Epoxy Crack Injection (Width > 0.06")

SF Square Foot

LF Linear Foot

MODEL: Default
FILE NAME: P:\2004-825 PTB 195-014 HBM\WO#7 I-90 Various Overlays\Ashland Ave\Sheet Files\0160133-62K73-S121-Pier 23 Repairs.dgn
4/30/2024 3:26:14 PM

HBM ENGINEERING GROUP, LLC

USER NAME =	DESIGNED - LAB, AMS	REVISED -	
	CHECKED - MI	REVISED -	
PLOT SCALE =	DRAWN - LAB, AMS	REVISED -	
PLOT DATE =	DATE - 4/29/2024	REVISED -	

STATE OF ILLINOIS
DEPARTMENT OF TRANSPORTATION

PIER 23 REPAIRS
STRUCTURE NO. 016-0133 (NB)

SHEET S03A-144 OF S03A-148 SHEETS

F.A.I. RTE.	SECTION	COUNTY	TOTAL SHEETS	SHEET NO.
90/94	2020-005-BR	COOK	908	472
		CONTRACT NO. 62K73		
		ILLINOIS	FED. AID PROJECT	

BILL OF MATERIAL

ITEM	UNIT	QUANTITY
Concrete Sealer	Sq Ft	475
Epoxy Crack Injection	Foot	7
Structural Repair Of Concrete (Depth Equal To Or Less Than 5 Inches)	Sq Ft	228

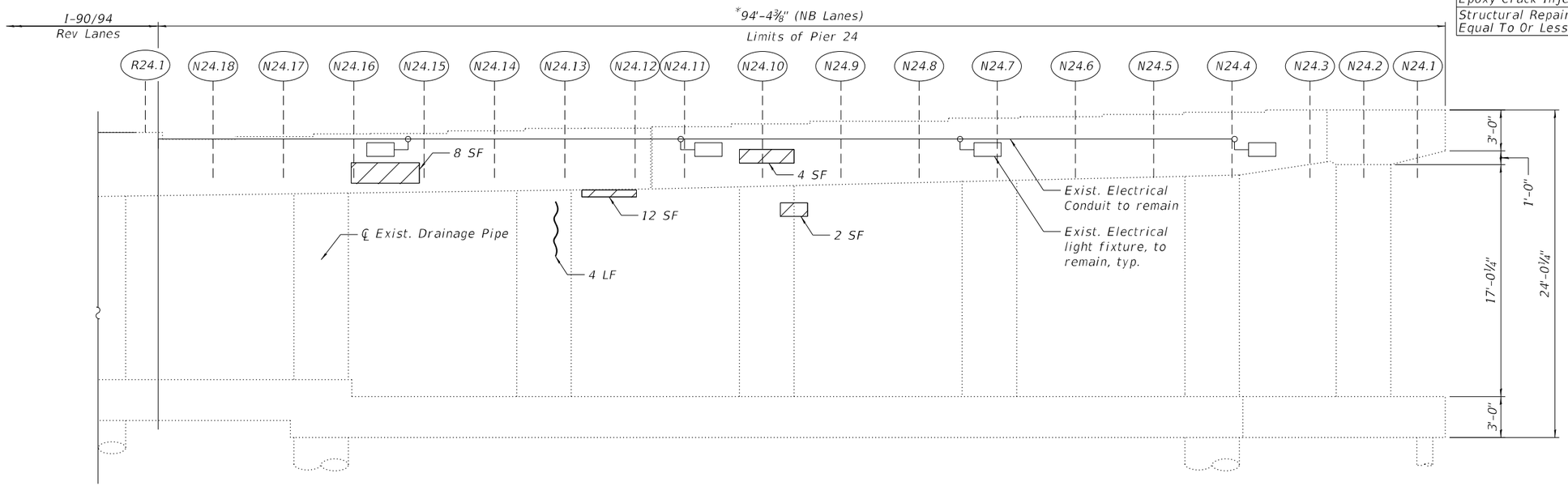

PIER 24 ELEVATION

(Looking North)

*Length measured perpendicular to the centerline of the NB lanes

PIER 24 - WEST END

(Looking North)

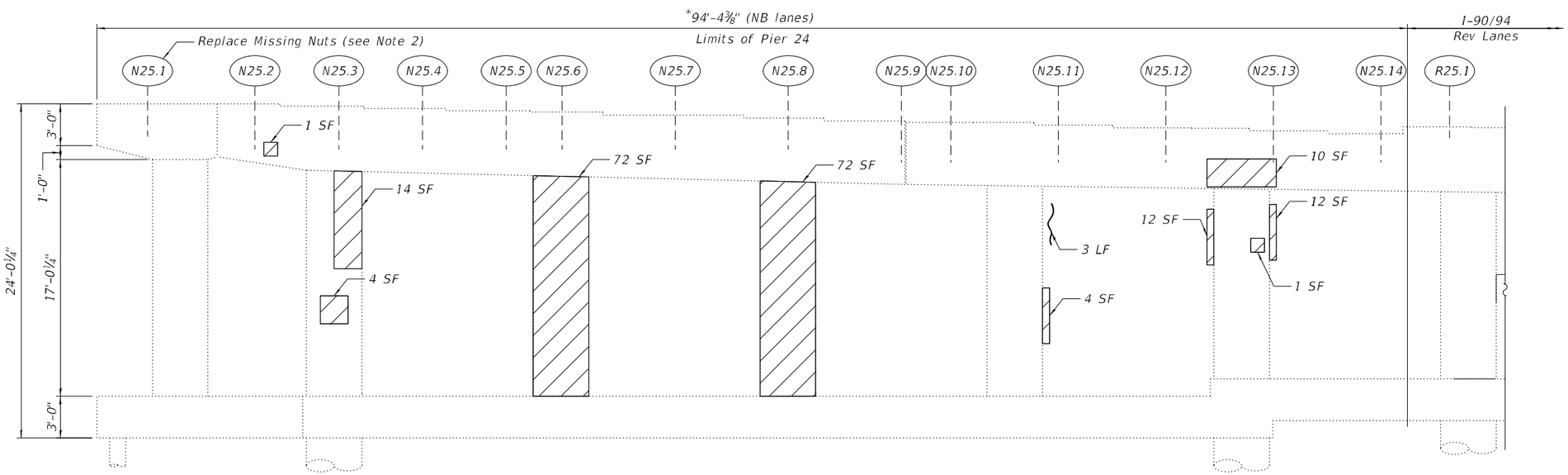

PIER 24 ELEVATION

(Looking South)

NOTES:

1. Quantities and limits shown are estimated for bidding purpose only. The actual areas to be repaired and the type(s) of repairs to be used will be determined by the engineer in the field at the time of construction.
2. The cost of Replacing the Nuts at the East and West face of Beam N25.1 will not be paid separately and shall be included with the Structural Repair of Concrete (Depth Equal To or Less Than 5 Inches).
3. Concrete Sealer is to be applid to the top of the pier cap.

LEGEND

Structural Repair of Concrete (Depth Equal to or Less than 5 inches)

Epoxy Crack Injection (Width > 0.06")

SF Square Foot

LF Linear Foot

MODEL: Default
FILE NAME: P:\2004-825 PTB195-014 HBM\WO#7 I-90 Various Overlays\Ashland Ave\Sheet Files\0160133-62K73-S122-Pier 24 Repairs.dgn

HBM ENGINEERING GROUP, LLC

USER NAME =	DESIGNED - LAB, AMS	REVISED -	
	CHECKED - MI	REVISED -	
PLOT SCALE =	DRAWN - LAB, AMS	REVISED -	
PLOT DATE =	DATE - 4/29/2024	REVISED -	

STATE OF ILLINOIS
DEPARTMENT OF TRANSPORTATION

PIER 24 REPAIRS
STRUCTURE NO. 016-0133 (NB)

SHEET S03A-145 OF S03A-148 SHEETS

F.A.I. RTE.	SECTION	COUNTY	TOTAL SHEETS	SHEET NO.
90/94	2020-005-BR	COOK	908	473

CONTRACT NO. 62K73

ILLINOIS | FED. AID PROJECT

4/30/2024 3:26:20 PM

BILL OF MATERIAL

ITEM	UNIT	QUANTITY
Porous Granular Embankment	Cu Yd	1
Slope Wall Removal	Sq Yd	1
Slope Wall 4 Inch	Sq Yd	1

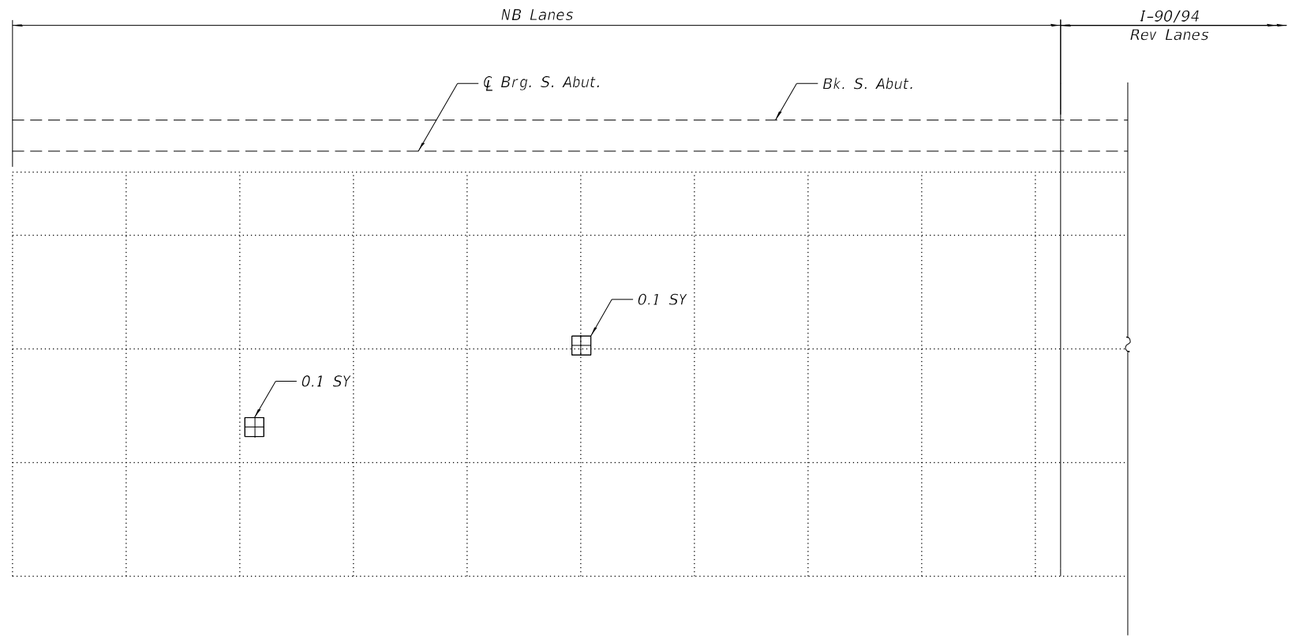

SOUTH SLOPE WALL

N

NOTES:

1. Quantities and limits shown are estimated for bidding purposes only. The actual areas to be repaired, and the type(s) of repairs to be used, will be determined by the Engineer in the field at the time of construction.

2. Slope wall shall be reinforced with welded wire fabric, 6 in. x 6 in. - W4.0 x W4.0, weighing 58 lbs. per 100 sq. ft.

LEGEND

Porous Granular Embankment, Slope Wall Removal and Slope Wall 4"

SY Square Yard

MODEL: Default
FILE NAME: P:\2004-825 PTB195-014 HBM\WO#7 I-90 Various Overlays\Ashland Ave\Sheet Files\0160133-62K73-S123-South Abutment Slope Wall Repairs.dgn
4/30/2024 3:26:25 PM

HBM ENGINEERING GROUP, LLC

USER NAME =	DESIGNED - LAB, FL	REVISED -	
	CHECKED - MI	REVISED -	
PLOT SCALE =	DRAWN - LAB, FL	REVISED -	
PLOT DATE =	DATE - 4/29/2024	REVISED -	

STATE OF ILLINOIS
DEPARTMENT OF TRANSPORTATION

SOUTH SLOPE WALL REPAIRS
STRUCTURE NO. 016-0133 (NB)

SHEET S03A-146 OF S03A-148 SHEETS

F.A.I. RTE.	SECTION	COUNTY	TOTAL SHEETS	SHEET NO.
90/94	2020-005-BR	COOK	908	474
		CONTRACT NO. 62K73		
		ILLINOIS	FED. AID PROJECT	

BILL OF MATERIAL

ITEM	UNIT	QUANTITY
Porous Granular Embankment	Cu Yd	11
Slope Wall Removal	Sq Yd	33
Slope Wall 4 Inch	Sq Yd	33
Chain Link Fence, 6'	Foot	17
Slope Wall Crack Sealing	Foot	42

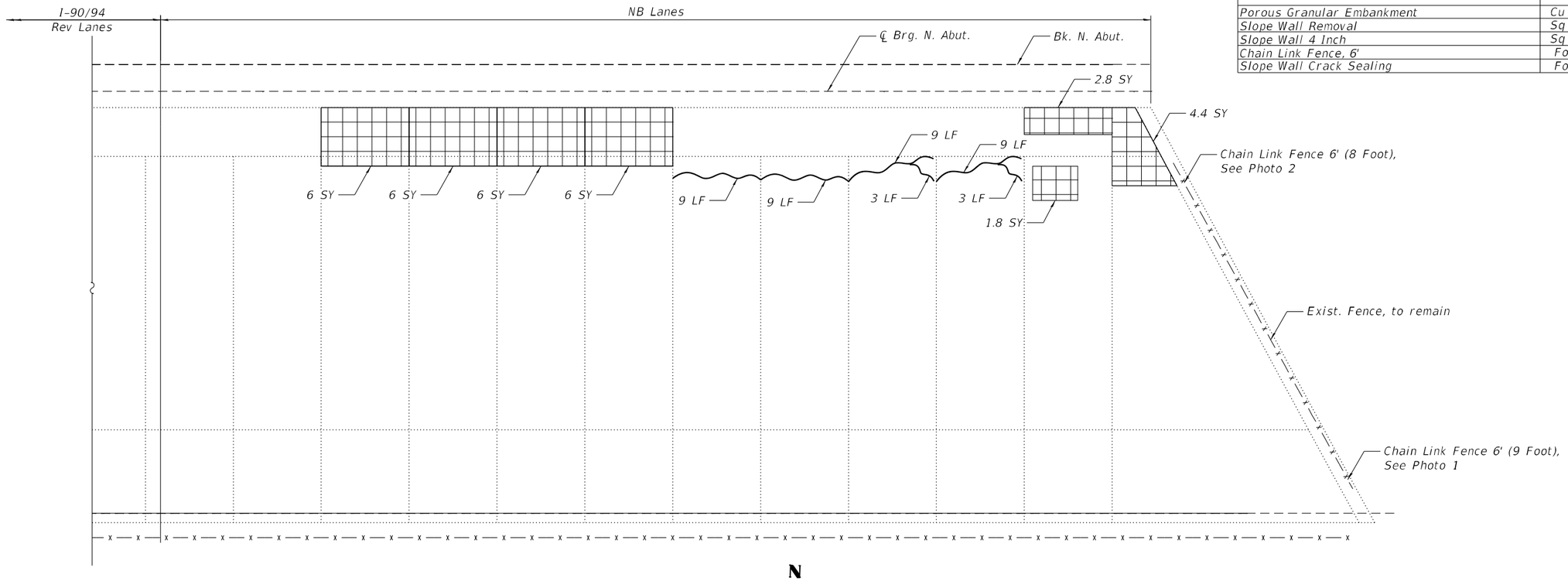

NORTH SLOPE WALL

N

PHOTO 1

PHOTO 2

NOTES:

1. Quantities and limits shown are estimated for bidding purposes only. The actual areas to be repaired, and the type(s) of repairs to be used, will be determined by the Engineer in the field at the time of construction.

2. Slope wall shall be reinforced with welded wire fabric, 6 in. x 6 in. - W4.0 x W4.0, weighing 58 lbs. per 100 sq. ft.

LEGEND

Porous Granular Embankment, Slope Wall Removal and Slope Wall 4"

Slope Wall Crack Sealing

SY Square Yard

LF Linear Foot

MODEL: Default
FILE NAME: P:\2004-825 PTB195-014 HBM\WO#7 I-90 Various Overlays\Ashland Ave\Sheet Files\0160133-62K73-S124-North Abutment Slope Wall Repairs.dgn

4/30/2024 3:26:30 PM

HBM ENGINEERING GROUP, LLC

USER NAME =	DESIGNED - LAB, AMS	REVISED -	
	CHECKED - MI	REVISED -	
PLOT SCALE =	DRAWN - LAB, AMS	REVISED -	
PLOT DATE =	DATE - 4/29/2024	REVISED -	

STATE OF ILLINOIS
DEPARTMENT OF TRANSPORTATION

NORTH SLOPE WALL REPAIRS
STRUCTURE NO. 016-0133 (NB)

SHEET S03A-147 OF S03A-148 SHEETS

F.A.I. RTE.	SECTION	COUNTY	TOTAL SHEETS	SHEET NO.
90/94	2020-005-BR	COOK	908	475
		CONTRACT NO. 62K73		
		ILLINOIS	FED. AID PROJECT	

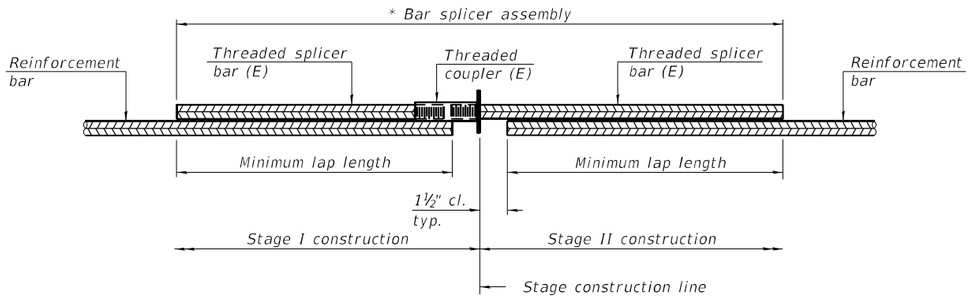

STANDARD BAR SPLICER ASSEMBLY PLAN

(All components shall be provided from one supplier)

Threaded splicer bar length = min. lap length + 1½" + thread length

* Epoxy not required on Bar Splicer Assembly components used in conjunction with black bars.

Location	Bar Size	No. assemblies required	Minimum lap length
Pier 1	#7	4	4'-2"
Pier 2	#7	4	4'-2"
Pier 3	#7	4	4'-2"
Pier 5	#7	4	4'-2"
Pier 7	#7	4	4'-2"
Pier 10	#5	4	3'-6"
Pier 11	#6	4	4'-0"
Pier 12	#7	4	4'-2"
Pier 13	#7	4	4'-2"
Pier 15	#7	4	4'-2"
Pier 16	#7	4	4'-2"
Pier 17	#7	4	4'-2"
Pier 18	#7	4	4'-2"
Pier 21	#7	4	4'-2"
Pier 23	#6	4	4'-0"
Pier 24	#6	4	4'-0"

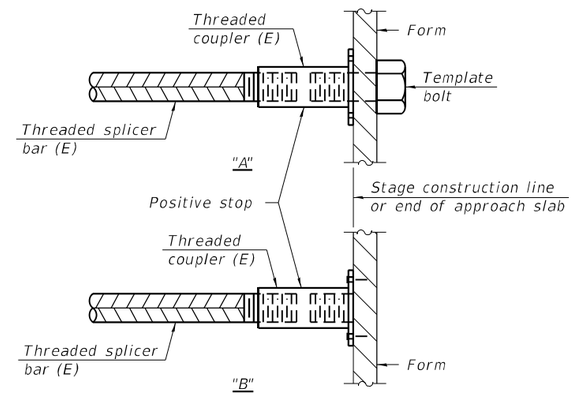

INSTALLATION AND SETTING METHODS

"A" : Set bar splicer assembly by means of a template bolt.
"B" : Set bar splicer assembly by nailing to wood forms or cementing to steel forms.
(E) : Indicates epoxy coating.

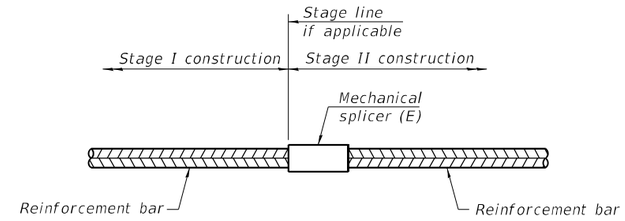

STANDARD MECHANICAL SPLICER

Location	Bar size	No. assemblies required

Notes:
Splicer bars shall be deformed with threaded ends and have a minimum 60 ksi yield strength.
All reinforcement shall be lapped and tied to the splicer bars.
Bar splicer assemblies shall be epoxy coated according to the requirements for reinforcement bars. See Section 508 of the Standard Specifications.
See approved list of bar splicer assemblies and mechanical splicers for alternatives.

BSD-1 1-1-2020

MODEL: Default
FILE NAME: P:\2004-825 PTB195-014 HBM\WO#7 I-90 Various Overlays\Ashland Ave\Sheet Files\0160133-62K73-S125-Bar Splicer Assembly Details.dgn
4/30/2024 3:26:36 PM

HBM ENGINEERING GROUP, LLC

USER NAME =	DESIGNED - LAB, FL	REVISED -	
	CHECKED - MI	REVISED -	
PLOT SCALE =	DRAWN - LAB, FL	REVISED -	
PLOT DATE =	DATE - 4/29/2024	REVISED -	

STATE OF ILLINOIS
DEPARTMENT OF TRANSPORTATION

BAR SPLICER ASSEMBLY AND MECHANICAL SPLICER DETAILS
STRUCTURE NO. 016-0133 (NB)

SHEET S03A-148 OF S03A-148 SHEETS

F.A.I. RTE.	SECTION	COUNTY	TOTAL SHEETS	SHEET NO.
90/94	2020-005-BR	COOK	908	476
		CONTRACT NO. 62K73		
		ILLINOIS	FED. AID PROJECT	

Existing Structure: The Reversible Lanes for S.N. 016-0133 was originally built in 1959 and reconstructed in 1991. The structure has a back-to-back abutment length of 1546'-4⅜" and an out-to-out deck width of 36'-11". The superstructure consists of a 7½" thick reinforced concrete deck supported on PPC I-beams and various built-up steel beams. The substructure consists of reinforced concrete abutments on piles and multi-column piers on caissons.

No salvage.

NOTES:

1. All stations are to the ℄ I-90/94 Rev Roadway and taken from existing plans.
2. No Future Wearing Surface is allowed.

DESIGN SPECIFICATION

2002 AASHTO Standard Specifications for Highway Bridges, 17th Edition

RECONSTRUCTION 2013

2002 AASHTO Standard Specifications for Highway Bridges

RECONSTRUCTION 1991

1989 AASHTO Standard Specifications for Highway Bridges with 1990 & 1991 Interim Specifications

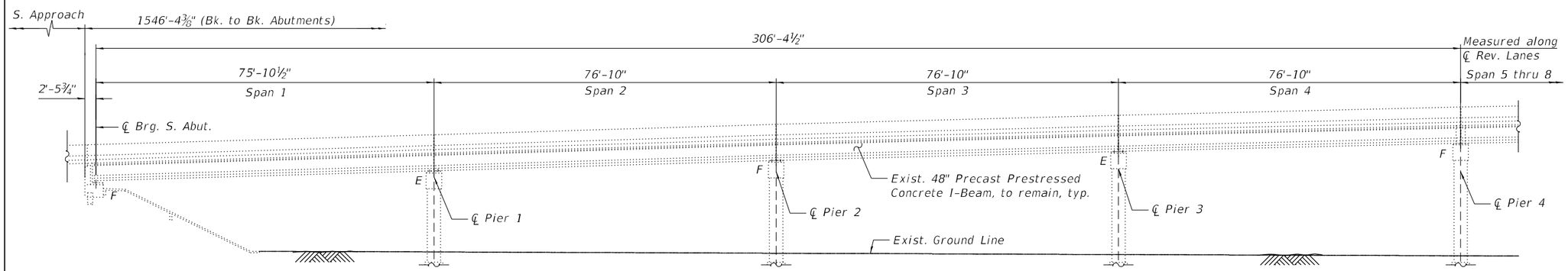

ELEVATION

(Looking West)

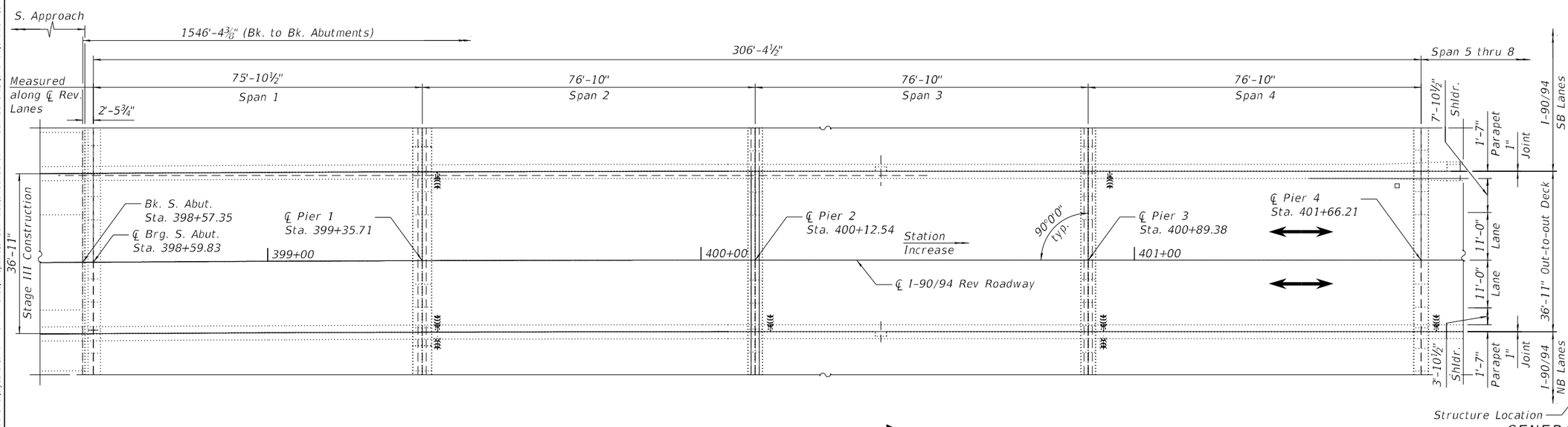

PLAN

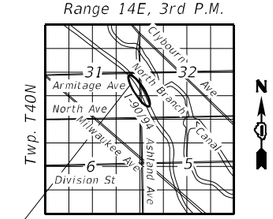

LOCATION SKETCH

STATE OF ILLINOIS
MOUSSA A. ISSA
081-005738
CHICAGO, ILLINOIS
LICENSED STRUCTURAL ENGINEER

Signed Moussa A. Issa
Dr. Moussa A. Issa, S.E. Il. Lic. No. 081-005738
Expires 11-30-2024
Date 04/29/2024 For Sheets S03B-01 thru S03B-40

GENERAL PLAN AND ELEVATION
REV I-90/94 OVER RR-UP & ASHLAND AVE
F.A.I. ROUTE 90/94
SECTION 2020-005-BR
COOK COUNTY
STATION 398+59.83
S.N. 016-0133 (REV)

HBM ENGINEERING GROUP, LLC

USER NAME =	DESIGNED - JMI	REVISED -	
	CHECKED - MI	REVISED -	
PLOT SCALE =	DRAWN - JMI	REVISED -	
PLOT DATE =	DATE - 4/29/2024	REVISED -	

STATE OF ILLINOIS
DEPARTMENT OF TRANSPORTATION

GENERAL PLAN AND ELEVATION (SHEET 1 OF 5)
STRUCTURE NO. 016-0133 (REV)
SHEET S03B-01 OF S03B-40 SHEETS

F.A.I. RTE.	SECTION	COUNTY	TOTAL SHEETS	SHEET NO.
90/94	2020-005-BR	COOK	908	477
		CONTRACT NO. 62K73		
		ILLINOIS	FED. AID PROJECT	

MODEL: Default
FILE NAME: P:\2004-825 PTB 195-014 HBM\WO#7 I-90 Various Overlays\Ashland Ave REV Steel Repairs\Sheet Files\0160133-62K74-S01-GeneralPlanandElevation (Sheet 1 of 5).dgn
4/30/2024 10:20:47 AM

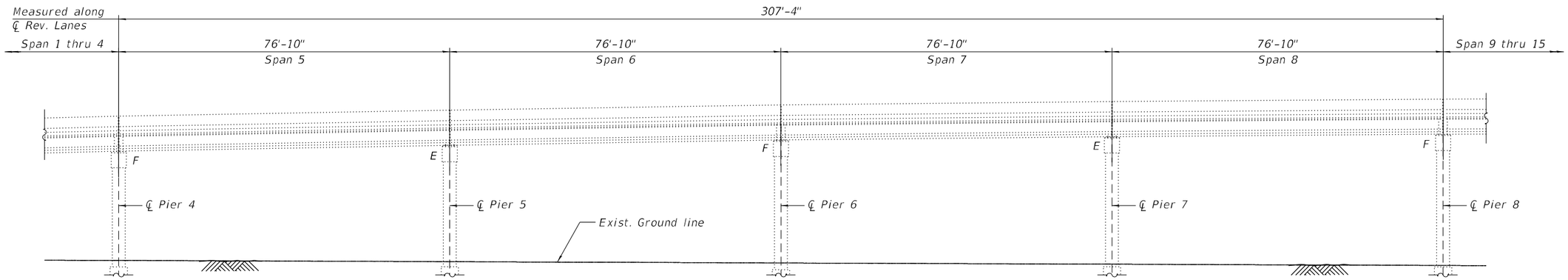

ELEVATION

(Looking West)

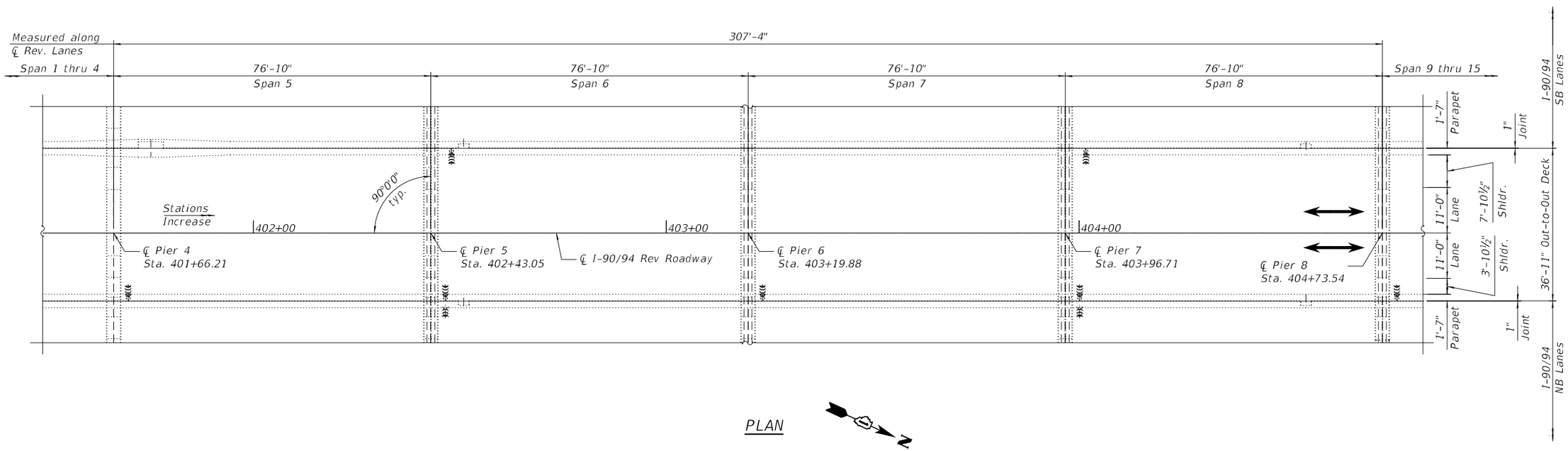

PLAN

N

MODEL: Default
FILE NAME: P:\2004-825 PTB 195-014 HBM\WO#7 I-90 Various Overlays\Ashland Ave REV Steel Repairs\Sheet Files\0160133-62K74-S02-GeneralPlanandElevation (Sheet 2 of 5).dgn

4/30/2024 10:20:48 AM

HBM ENGINEERING GROUP, LLC	USER NAME =	DESIGNED - JMI	REVISED -
		CHECKED - MI	REVISED -
	PLOT SCALE =	DRAWN - JMI	REVISED -
	PLOT DATE =	DATE - 4/29/2024	REVISED -

STATE OF ILLINOIS
DEPARTMENT OF TRANSPORTATION

GENERAL PLAN AND ELEVATION (SHEET 2 OF 5)
STRUCTURE NO. 016-0133 (REV)

SHEET S03B-02 OF S03B-40 SHEETS

F.A.I. RTE.	SECTION	COUNTY	TOTAL SHEETS	SHEET NO.
90/94	2020-005-BR	COOK	908	478
		CONTRACT NO. 62K73		
		ILLINOIS	FED. AID PROJECT	

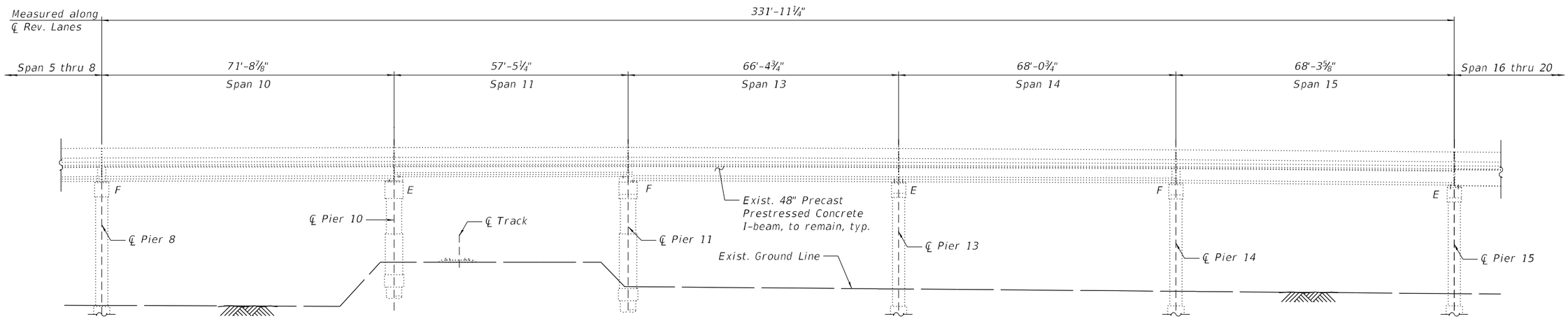

ELEVATION

(Looking West)

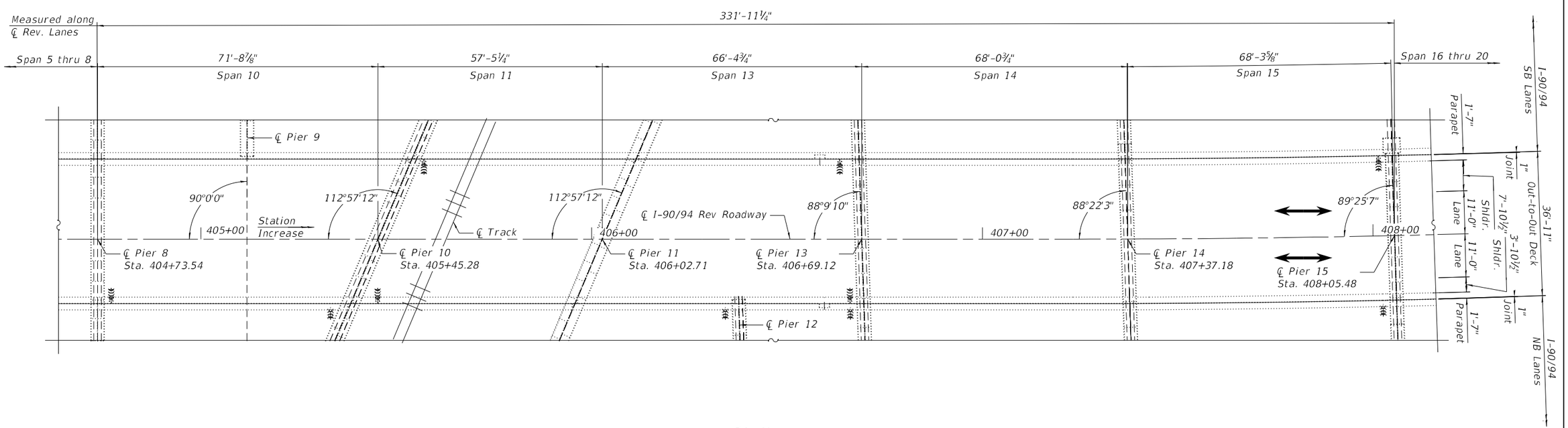

PLAN

N

HBM ENGINEERING GROUP, LLC	USER NAME =	DESIGNED - JMI	REVISED -	STATE OF ILLINOIS DEPARTMENT OF TRANSPORTATION	GENERAL PLAN AND ELEVATION (SHEET 3 OF 5) STRUCTURE NO. 016-0133 (REV)
		CHECKED - MI	REVISED -		
	PLOT SCALE =	DRAWN - JMI	REVISED -		
	PLOT DATE =	DATE - 4/29/2024	REVISED -		SHEET S03B-03 OF S03B-40 SHEETS

F.A.I. RTE.	SECTION	COUNTY	TOTAL SHEETS	SHEET NO.
90/94	2020-005-BR	COOK	908	479
		CONTRACT NO. 62K73		
		ILLINOIS	FED. AID PROJECT	

MODEL: Default
FILE NAME: P:\2004-825 PTB195-014 HBM\WO#7 I-90 Various Overlays\Ashland Ave REV Steel Repairs\Sheet Files\0160133-62K74-S03-GeneralPlanandElevation (Sheet 3 of 5).dgn
4/30/2024 10:20:49 AM

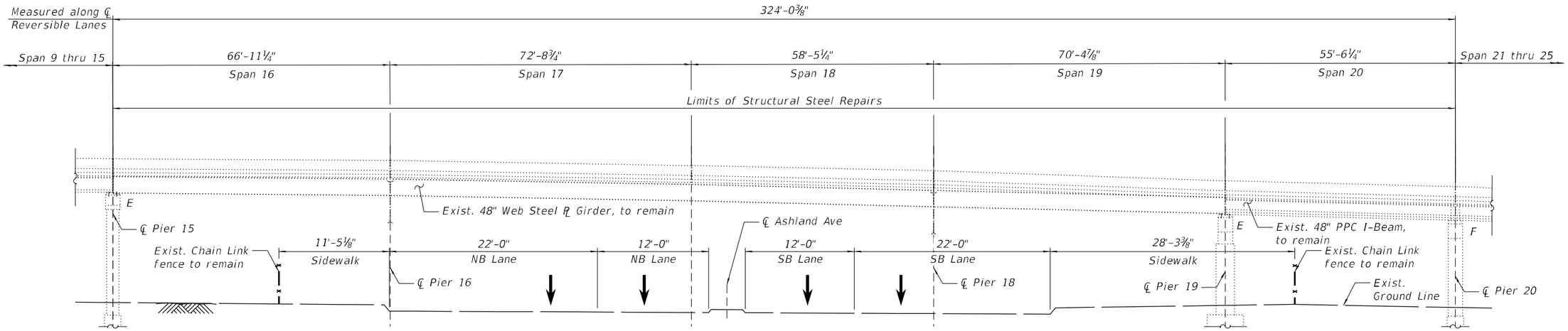

ELEVATION
(Looking West)

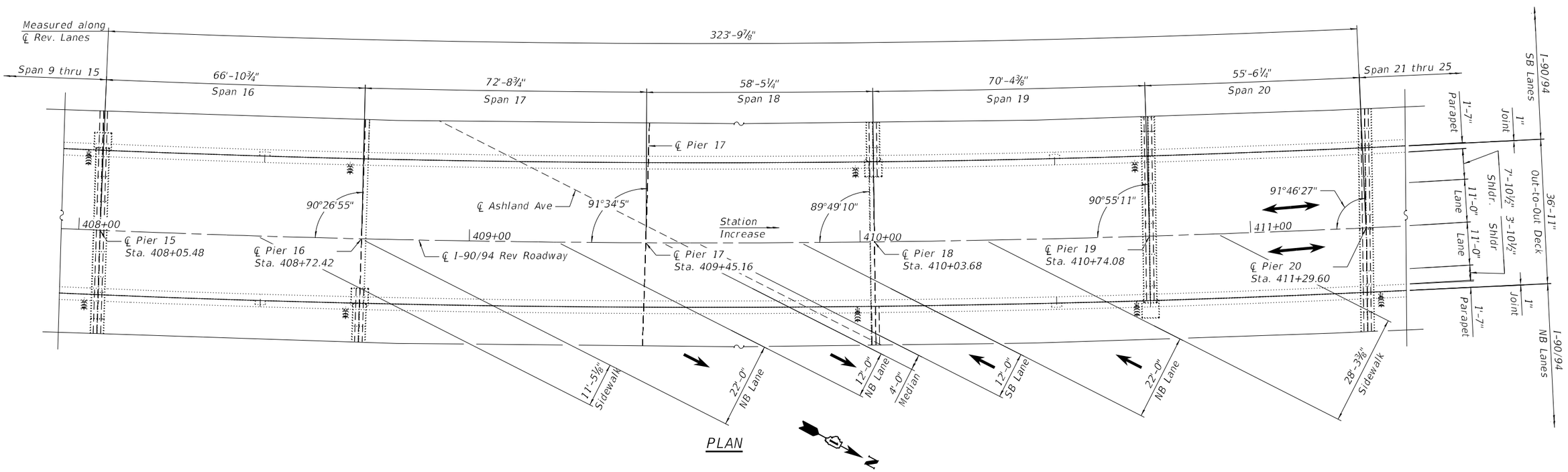

PLAN

MODEL: Default
FILE NAME: P:\2004-825 PTB195-014 HBM\WO#7 I-90 Various Overlays\Ashland Ave REV Steel Repairs\Sheet Files\0160133-62K74-S04-GeneralPlanandElevation (Sheet 4 of 5).dgn
4/30/2024 10:20:51 AM

HBM ENGINEERING GROUP, LLC	USER NAME =	DESIGNED - JMI	REVISED -
		CHECKED - MI	REVISED -
	PLOT SCALE =	DRAWN - JMI	REVISED -
	PLOT DATE =	DATE - 4/29/2024	REVISED -

STATE OF ILLINOIS
DEPARTMENT OF TRANSPORTATION

GENERAL PLAN AND ELEVATION (SHEET 4 OF 5)
STRUCTURE NO. 016-0133 (REV)

SHEET S03B-04 OF S03B-40 SHEETS

F.A.I. RTE.	SECTION	COUNTY	TOTAL SHEETS	SHEET NO.
90/94	2020-005-BR	COOK	908	480
		CONTRACT NO. 62K73		
		ILLINOIS	FED. AID PROJECT	

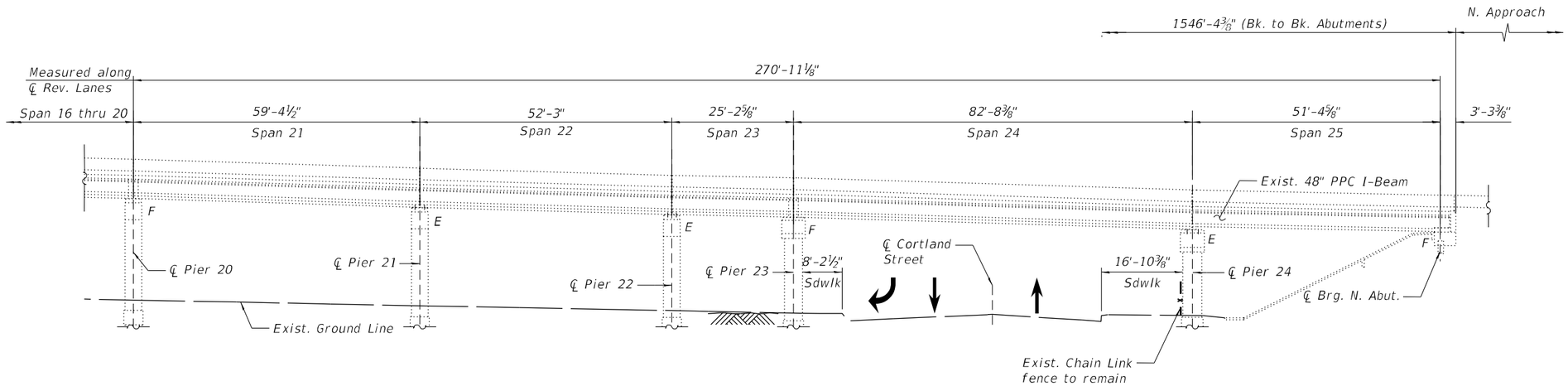

ELEVATION
(Looking West)

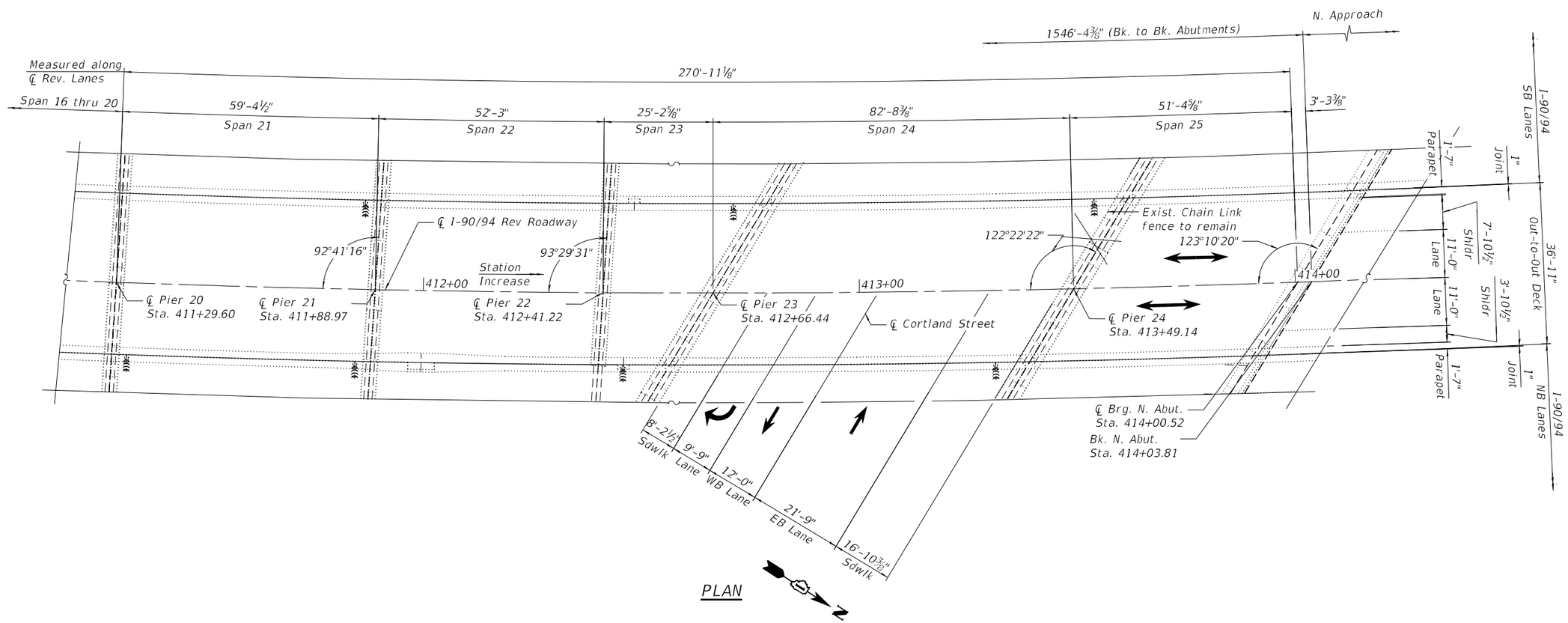

PLAN

MODEL: Default
FILE NAME: P:\2004-825 PTB 195-014 HBM\WO#7 I-90 Various Overlays\Ashland Ave REV Steel Repairs\Sheet Files\0160133-62K74-S05-GeneralPlanandElevation (Sheet 5 of 5).dgn
4/30/2024 10:20:52 AM

HBM ENGINEERING GROUP, LLC	USER NAME =	DESIGNED - JMI	REVISED -
		CHECKED - MI	REVISED -
	PLOT SCALE =	DRAWN - JMI	REVISED -
	PLOT DATE =	DATE - 4/29/2024	REVISED -

STATE OF ILLINOIS
DEPARTMENT OF TRANSPORTATION

GENERAL PLAN AND ELEVATION (SHEET 5 OF 5)
STRUCTURE NO. 016-0133 (REV)

SHEET S03B-05 OF S03B-40 SHEETS

F.A.I. RTE.	SECTION	COUNTY	TOTAL SHEETS	SHEET NO.
90/94	2020-005-BR	COOK	908	481
		CONTRACT NO. 62K73		
		ILLINOIS	FED. AID PROJECT	

GENERAL NOTES

1. The existing structural steel coating contains lead. The Contractor shall take appropriate precautions to deal with the presence of lead on this project.

2. Adjacent I-90/94 NB and SB bridges are not shown throughout the plans for clarity.

3. The Contractor shall take the necessary precautions for the protection of passing vehicles, bicycles and pedestrians from falling objects and/or materials until completion of work.

4. The Contractor is responsible to remove, support and reinstall all existing electrical conduits interfering with the work. See special provision "Protection and Maintenance of Existing Underpass Luminaires".

5. All new structural steel shall be hot-dip galvanized. See Special Provisions for "Hot Dip Galvanizing for Structural Steel." Cost included with Structural Steel Repair.

6. The Contractor shall contact Chandra Libby, the Director of City of Chicago Department of Family Support Services (DFSS) at 312-746-5443 or Chandra.Libby@cityofchicago.org to coordinate the relocation of persons and their personal belongings under the bridges.

7. No field welding is permitted except as specified in the contract documents.

8. Plan dimensions and details relative to the existing structure have been taken from existing plans and are subject to nominal construction variations. The Contractor shall field verify existing dimensions and details affecting new construction and make necessary approved adjustments prior to construction or ordering of materials. Such variations shall not be cause for additional compensation for a change in scope of the work, however, the Contractor will be paid for the quantity actually furnished at the unit price bid for the work.

9. Existing structural steel that will be in contact with new structural steel shall be cleaned and painted prior to erection as required by the Special Provision "Cleaning and Painting Contact Surface Areas of Existing Steel Structures".

10. Fasteners shall be ASTM F 3125 Grade A325 Type 1. Fasteners shall be hot dip galvanized. See Special Provision for "Hot Dip Galvanizing for Structural Steel." Bolts $\frac{3}{4}$ in. diameter, holes $\frac{13}{16}$ in. diameter, unless otherwise noted.

11. All structural steel shall conform to AASHTO Classification M-270 Gr. 36 unless otherwise noted.

12. Elements of this structure may require removal and re-installation due to the proposed repairs. Such removal and re-installation shall not be paid separately and shall be included in the cost of Structural Steel Repair.

INDEX OF SHEETS

S03B-01 General Plan And Elevation (Sheet 1 of 5)
S03B-02 General Plan And Elevation (Sheet 2 of 5)
S03B-03 General Plan And Elevation (Sheet 3 of 5)
S03B-04 General Plan And Elevation (Sheet 4 of 5)
S03B-05 General Plan And Elevation (Sheet 5 of 5)
S03B-06 General Notes, Index of Sheets & TBOM
S03B-07 Framing Plan (Sheet 1 of 7)
S03B-08 Framing Plan (Sheet 2 of 7)
S03B-09 Framing Plan (Sheet 3 of 7)
S03B-10 Framing Plan (Sheet 4 of 7)
S03B-11 Framing Plan (Sheet 5 of 7)
S03B-12 Framing Plan (Sheet 6 of 7)
S03B-13 Framing Plan (Sheet 7 of 7)
S03B-14 Structural Steel Repairs at R16.6 (Sht. 1 of 2)
S03B-15 Structural Steel Repairs at R16.6 (Sht. 2 of 2)
S03B-16 Structural Steel Repairs at R17.1 (Sht. 1 of 2)
S03B-17 Structural Steel Repairs at R17.1 (Sht. 2 of 2)
S03B-18 Structural Steel Repairs at R17.4 (Sht. 1 of 3)
S03B-19 Structural Steel Repairs at R17.4 (Sht. 2 of 3)
S03B-20 Structural Steel Repairs at R17.4 (Sht. 3 of 3)
S03B-21 Structural Steel Repairs at R17.5 (Sht. 1 of 3)
S03B-22 Structural Steel Repairs at R17.5 (Sht. 2 of 3)
S03B-23 Structural Steel Repairs at R17.5 (Sht. 3 of 3)
S03B-24 Structural Steel Repairs at R17.6 (Sht. 1 of 2)
S03B-25 Structural Steel Repairs at R17.6 (Sht. 2 of 2)
S03B-26 Structural Steel Repairs at R18.1 (Sht. 1 of 2)
S03B-27 Structural Steel Repairs at R18.1 (Sht. 2 of 2)
S03B-28 Structural Steel Repairs at R18.4 (Sht. 1 of 2)
S03B-29 Structural Steel Repairs at R18.4 (Sht. 2 of 2)
S03B-30 Structural Steel Repairs at R18.6 (Sht. 1 of 2)
S03B-31 Structural Steel Repairs at R18.6 (Sht. 2 of 2)
S03B-32 Structural Steel Repairs at R19.6 South End (Sht. 1 of 4)
S03B-33 Structural Steel Repairs at R19.6 South End (Sht. 2 of 4)
S03B-34 Structural Steel Repairs at R19.6 South End (Sht. 3 of 4)
S03B-35 Structural Steel Repairs at R19.6 South End (Sht. 4 of 4)
S03B-36 Structural Steel Repairs at R19.6 North End (Sht. 1 of 2)
S03B-37 Structural Steel Repairs at R19.6 North End (Sht. 2 of 2)
S03B-38 Structural Steel Repairs at Sway Frames (Pier 19)
S03B-39 Elastomeric Bearing Details (Sht. 1 of 2)
S03B-40 Elastomeric Bearing Details (Sht. 2 of 2)

TOTAL BILL OF MATERIAL

ITEM	UNIT	SUPER	SUB	TOTAL
Furnishing And Erecting Structural Steel	Pound	770		770
Elastomeric Bearing Assembly, Type I	Each	9	-	9
Anchor Bolts, 1"	Each	8	-	8
Protect And Maintain Existing Underpass Luminaire	L Sum	0.04	-	0.04
Structural Steel Repair	Pound	26,320	-	26,320
Removal Of Existing Bearings	Each	9	-	9
Temporary Shoring And Cribbing	Each	11	-	11

SCOPE OF WORK

1. Perform Structural steel beam end repairs and remove existing members, furnish and install new members as shown in the plans.

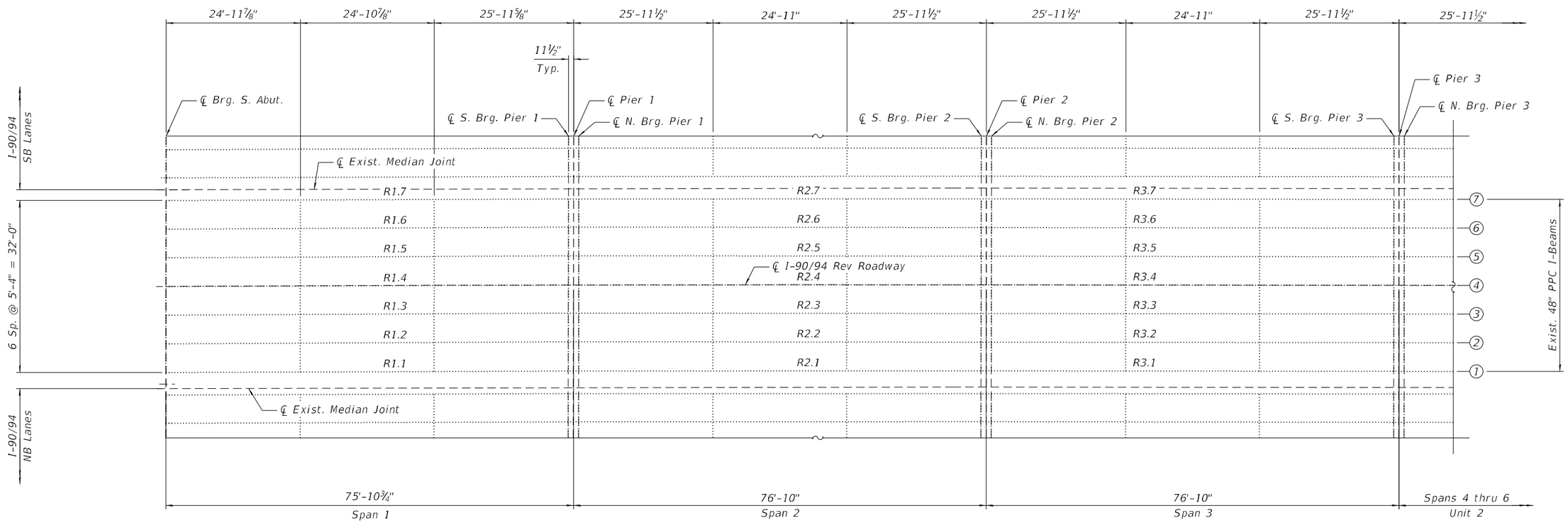

FRAMING PLAN - UNIT 1

MODEL: Default
FILE NAME: P:\2004-825 PTB195-014 HBM\WO#7 I-90 Various Overlays\Ashland Ave REV Steel Repairs\Sheet Files\0160133-62K74-S07-FramingPlans 1.dgn

HBM ENGINEERING GROUP, LLC	USER NAME =	DESIGNED - LAB, CP	REVISED -	STATE OF ILLINOIS DEPARTMENT OF TRANSPORTATION	FRAMING PLAN (SHEET 1 OF 7) STRUCTURE NO. 016-0133 (REV)
		CHECKED - MI	REVISED -		
	PLOT SCALE =	DRAWN - LAB, CP	REVISED -		SHEET S03B-07 OF S03B-40 SHEETS
	PLOT DATE =	DATE - 4/29/2024	REVISED -		

F.A.I. RTE.	SECTION	COUNTY	TOTAL SHEETS	SHEET NO.
90/94	2020-005-BR	COOK	908	483
		CONTRACT NO. 62K73		
		ILLINOIS	FED. AID PROJECT	

4/30/2024 10:21:00 AM

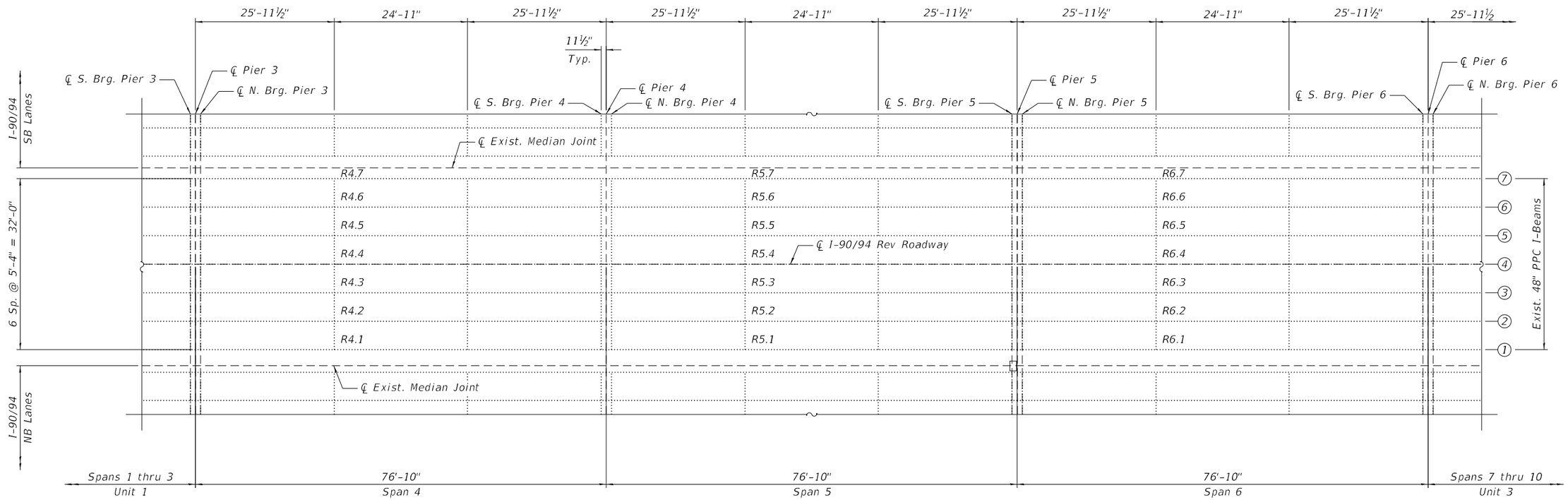

FRAMING PLAN - UNIT 2

N

MODEL: Default
FILE NAME: P:\2004-825 PTB195-014 HBM\WO#7 I-90 Various Overlays\Ashland Ave REV Steel Repairs\Sheet Files\0160133-62K74-S08-FramingPlans 2.dgn
4/30/2024 10:21:01 AM

HBM ENGINEERING GROUP, LLC	USER NAME =	DESIGNED - LAB, CP	REVISED -
		CHECKED - MI	REVISED -
	PLOT SCALE =	DRAWN - LAB, CP	REVISED -
	PLOT DATE =	DATE - 4/29/2024	REVISED -

STATE OF ILLINOIS
DEPARTMENT OF TRANSPORTATION

FRAMING PLAN (SHEET 2 OF 7)
STRUCTURE NO. 016-0133 (REV)

SHEET S03B-08 OF S03B-40 SHEETS

F.A.I. RTE.	SECTION	COUNTY	TOTAL SHEETS	SHEET NO.
90/94	2020-005-BR	COOK	908	484
		CONTRACT NO. 62K73		
	ILLINOIS	FED. AID PROJECT		

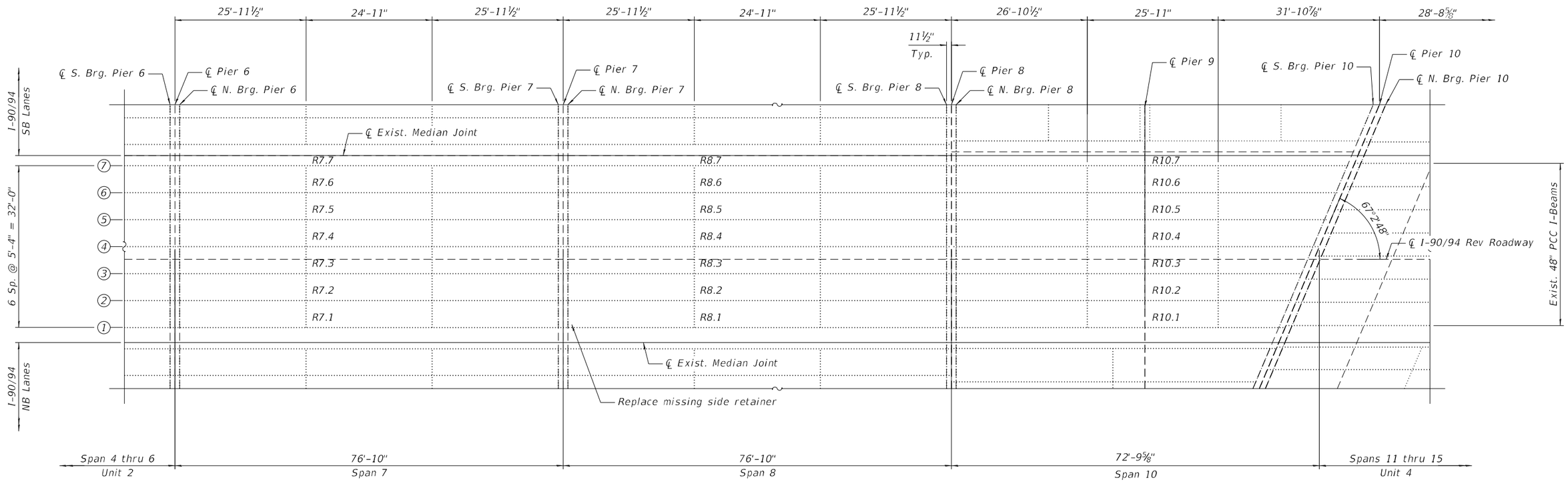

FRAMING PLAN - UNIT 3

MODEL: Default
FILE NAME: P:\2004-825 PTB195-014 HBM\WO#7 I-90 Various Overlays\Ashland Ave REV Steel Repairs\Sheet Files\0160133-62K74-S09-FramingPlans 3.dgn
4/30/2024 10:21:02 AM

HBM ENGINEERING GROUP, LLC	USER NAME =	DESIGNED - LAB, CP	REVISED -	STATE OF ILLINOIS DEPARTMENT OF TRANSPORTATION	FRAMING PLAN (SHEET 3 OF 7) STRUCTURE NO. 016-0133 (REV)
		CHECKED - MI	REVISED -		
	PLOT SCALE =	DRAWN - LAB, CP	REVISED -		
	PLOT DATE =	DATE - 4/29/2024	REVISED -		SHEET S03B-09 OF S03B-40 SHEETS

F.A.I. RTE.	SECTION	COUNTY	TOTAL SHEETS	SHEET NO.
90/94	2020-005-BR	COOK	908	485
		CONTRACT NO. 62K73		
		ILLINOIS	FED. AID PROJECT	

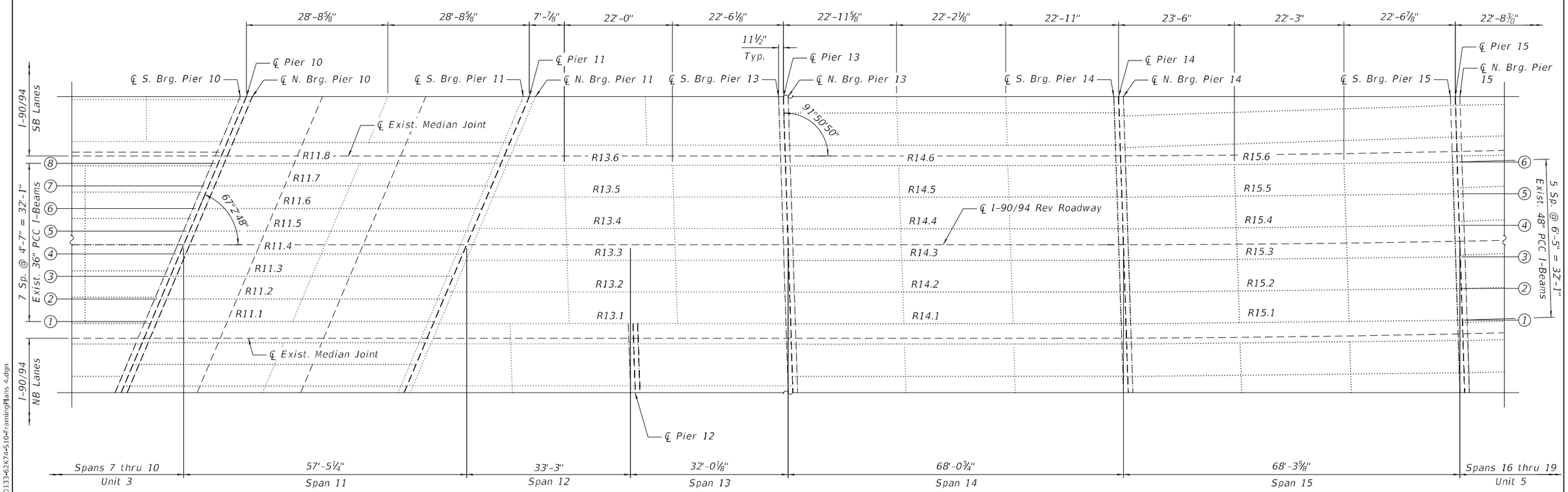

FRAMING PLAN - UNIT 4

MODEL: Default
FILE NAME: P:\2004-825 PTB195-014 HBM\WO#7 I-90 Various Overlays\Ashland Ave REV Steel Repairs\Sheet Files\0160133-62K74-510-FramingPlans 4.dgn

4/30/2024 10:21:04 AM

HBM ENGINEERING GROUP, LLC	USER NAME =	DESIGNED - LAB, CP	REVISED -	STATE OF ILLINOIS DEPARTMENT OF TRANSPORTATION	FRAMING PLAN (SHEET 4 OF 7) STRUCTURE NO. 016-0133 (REV)
		CHECKED - MI	REVISED -		
	PLOT SCALE =	DRAWN - LAB, CP	REVISED -		
	PLOT DATE =	DATE - 4/29/2024	REVISED -		SHEET S03B-10 OF S03B-40 SHEETS

F.A.I. RTE.	SECTION	COUNTY	TOTAL SHEETS	SHEET NO.
90/94	2020-005-BR	COOK	908	486
		CONTRACT NO. 62K73		
		ILLINOIS	FED. AID PROJECT	

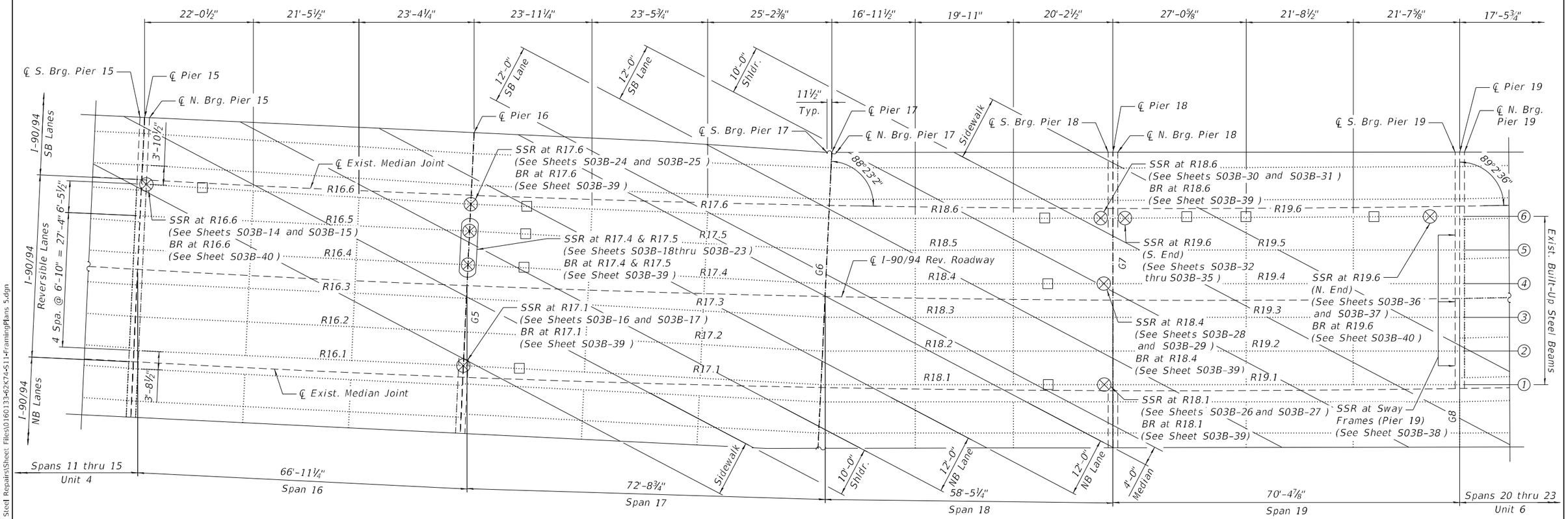

FRAMING PLAN - UNIT 5

BEAM REACTION TABLE

LOADS		R16.1	R16.5 R16.4 R16.3 R16.2	R16.6	R17.6 R17.1	R17.5 R17.4 R17.3 R17.2	R18.1	R18.2	R18.3	R18.4	R18.5	R18.6	R19.6	R19.5 R19.4 R19.3 R19.2	R19.1
RDL	k	35.7	39.8	29.5	35.9	43.5	26.9	35.0	35.0	35.0	35.0	29.4	36.7	41.9	32.6
RLL	k	36.5	43.1	36.5	37.5	43.6	36.2	42.3	42.3	42.3	42.3	36.1	37.3	43.5	37.3
IMP	k	9.6	11.3	9.6	9.5	11.1	9.8	11.5	11.5	11.5	11.5	9.9	9.6	11.2	9.6
R TOTAL	k	81.8	94.2	75.6	82.9	98.2	72.9	88.8	88.8	88.8	88.8	75.4	83.6	96.6	79.5

LEGEND:

SSR Structural Steel Repair

MSR Miscellaneous Steel Repair

BR Bearing Replacement

⊗ Location of Structural Steel Repair or Bearing Replacement

□ Location of Temporary Shoring Tower

HBM ENGINEERING GROUP, LLC

USER NAME =	DESIGNED - LAB, CP	REVISED -
	CHECKED - MI	REVISED -
PLOT SCALE =	DRAWN - LAB, CP	REVISED -
PLOT DATE =	DATE - 4/29/2024	REVISED -

STATE OF ILLINOIS
DEPARTMENT OF TRANSPORTATION

FRAMING PLAN (SHEET 5 OF 7)
STRUCTURE NO. 016-0133 (REV)

SHEET S03B-11 OF S03B-40 SHEETS

F.A.I. RTE.	SECTION	COUNTY	TOTAL SHEETS	SHEET NO.
90/94	2020-005-BR	COOK	908	487
		CONTRACT NO. 62K73		
		ILLINOIS	FED. AID PROJECT	

MODEL: Default
FILE NAME: P:\2004-825 PTB195-014 HBN\WO#7 I-90 Various Overlays\Ashland Ave REV Steel Repairs\Sheet Files\0160133-62K74-S11-FramingPlans 5.dgn
4/30/2024 10:21:05 AM

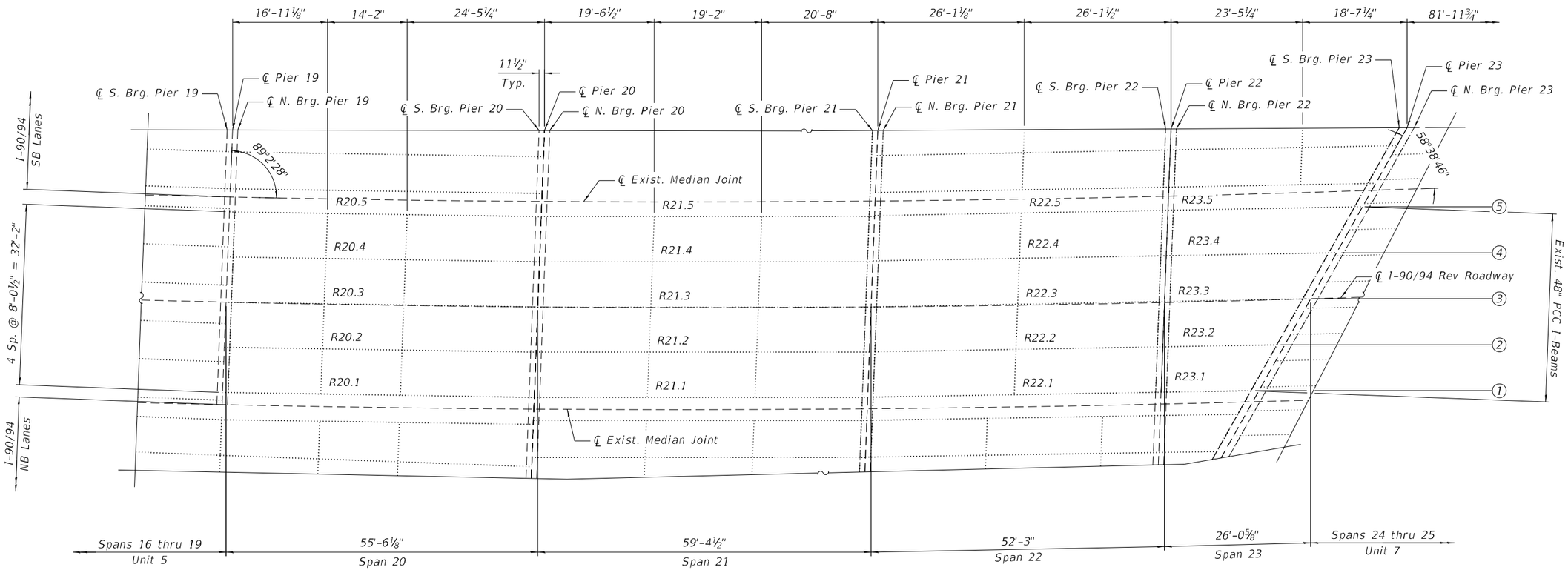

FRAMING PLAN - UNIT 6

LEGEND:

SSR	Structural Steel Repair
MSR	Miscellaneous Steel Repair
BR	Bearing Replacement
⊗	Location of Structural Steel Repair or Bearing Replacement

MODEL: Default
FILE NAME: P:\2004-823 PTB195-014 HBM\WO#7 I-90 Various Overlays\Ashland Ave REV Steel Repairs\Sheet Files\0160133-62K74-S12-FramingPlans 6.dgn
4/30/2024 10:21:06 AM

HBM ENGINEERING GROUP, LLC

USER NAME =	DESIGNED - LAB, CP	REVISED -	
	CHECKED - MI	REVISED -	
PLOT SCALE =	DRAWN - LAB, CP	REVISED -	
PLOT DATE =	DATE - 4/29/2024	REVISED -	

STATE OF ILLINOIS
DEPARTMENT OF TRANSPORTATION

FRAMING PLAN (SHEET 6 OF 7)
STRUCTURE NO. 016-0133 (REV)
SHEET S03B-12 OF S03B-40 SHEETS

F.A.I. RTE.	SECTION	COUNTY	TOTAL SHEETS	SHEET NO.
90/94	2020-005-BR	COOK	908	488
		CONTRACT NO. 62K73		
	ILLINOIS	FED. AID PROJECT		

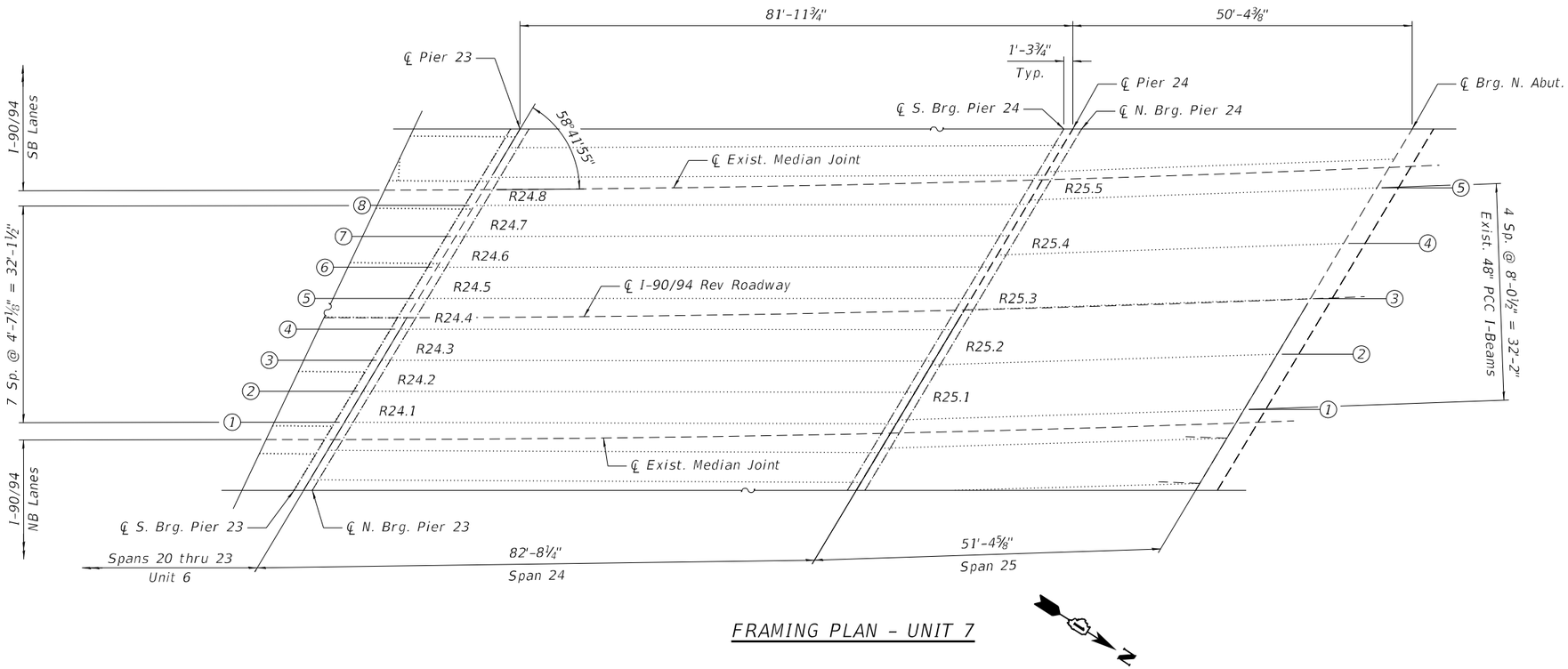

FRAMING PLAN - UNIT 7

LEGEND:

SSR	Structural Steel Repair
MSR	Miscellaneous Steel Repair
BR	Bearing Replacement
⊗	Location of Structural Steel Repair or Bearing Replacement

MODEL: Default
FILE NAME: P:\2004-825 PTB195-014 HBM\WO#7 I-90 Various Overlays\Ashland Ave REV Steel Repairs\Sheet Files\0160133-62K74-S13-FramingPlans 7.dgn
4/30/2024 10:21:07 AM

HBM ENGINEERING GROUP, LLC

USER NAME =	DESIGNED - LAB, CP	REVISED -	
	CHECKED - MI	REVISED -	
PLOT SCALE =	DRAWN - LAB, CP	REVISED -	
PLOT DATE =	DATE - 4/29/2024	REVISED -	

STATE OF ILLINOIS
DEPARTMENT OF TRANSPORTATION

FRAMING PLAN (SHEET 7 OF 7)
STRUCTURE NO. 016-0133 (REV)
SHEET S03B-13 OF S03B-40 SHEETS

F.A.I. RTE.	SECTION	COUNTY	TOTAL SHEETS	SHEET NO.
90/94	2020-005-BR	COOK	908	489
		CONTRACT NO. 62K73		
	ILLINOIS	FED. AID PROJECT		

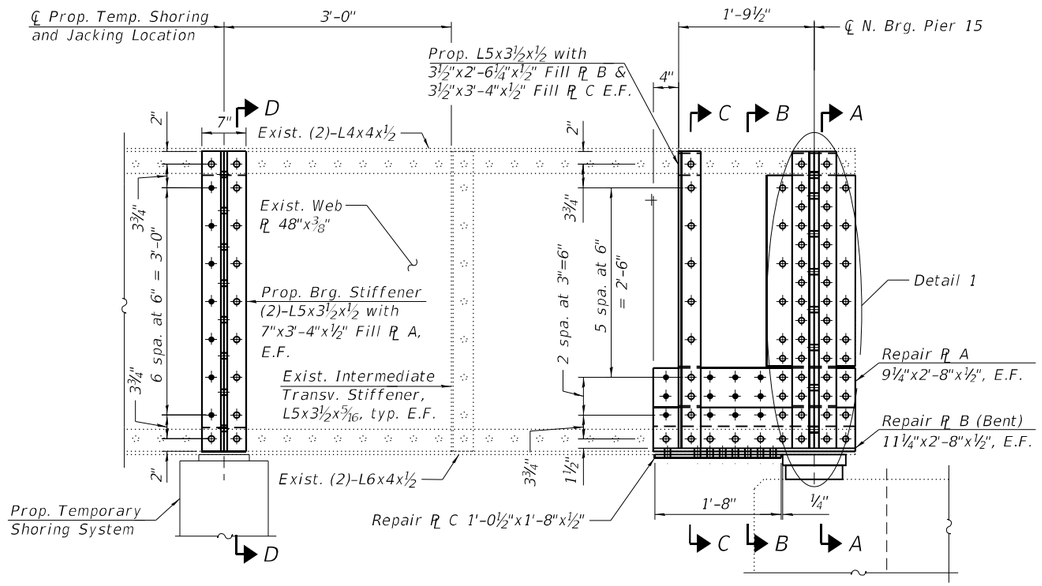

STEEL REPAIR R16.6 - ELEVATION

(Looking East)

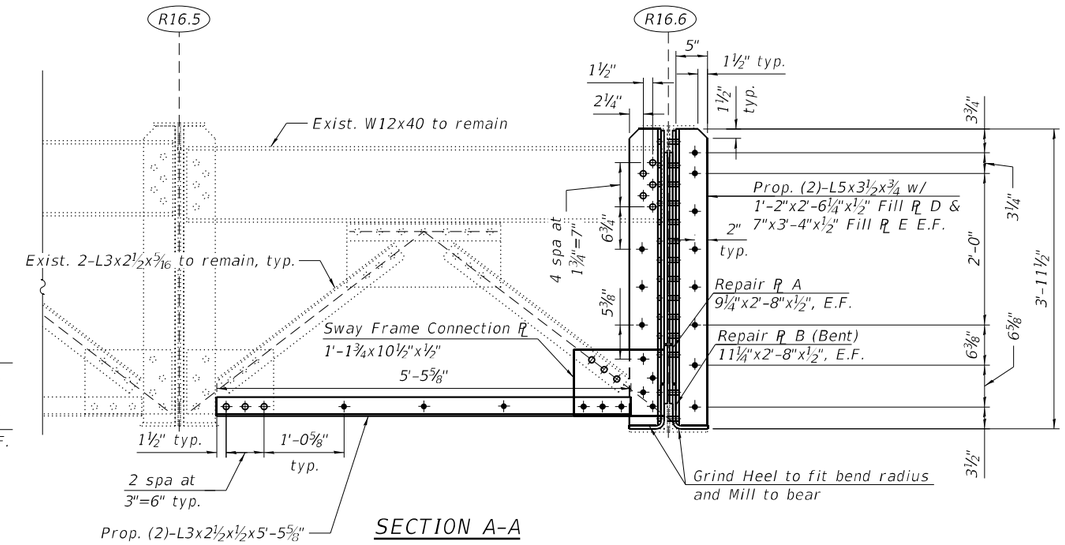

SECTION A-A

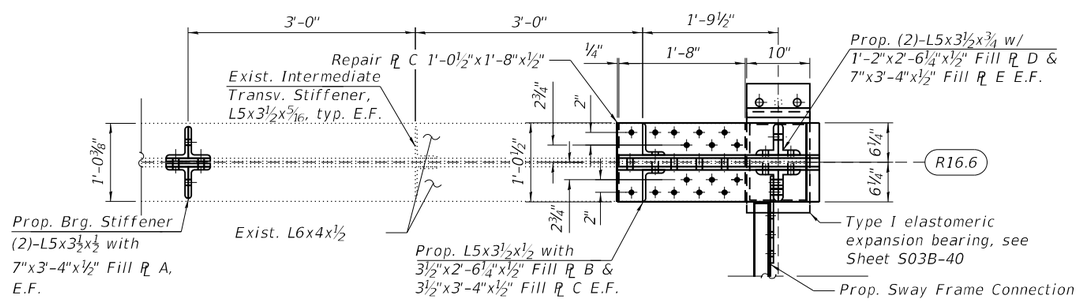

STEEL REPAIR R16.6 - PLAN

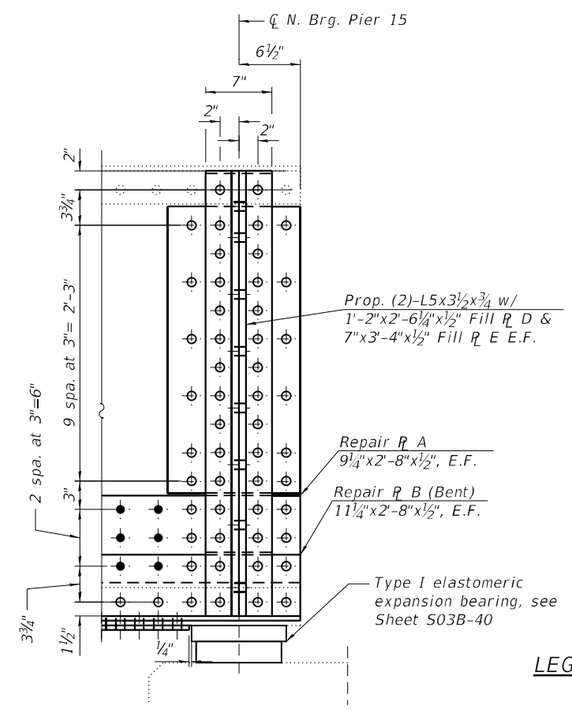

DETAIL 1

SUGGESTED CONSTRUCTION SEQUENCE FOR STRINGER R16.6 REPAIR:

1. Remove existing intermediate transverse stiffeners at the proposed jacking/temp. shoring location indicated in the "Steel Repair R16.6 - Elevation" and clean/paint newly exposed faces of stringer web according to the Special Provision for "Cleaning and Painting Contact Surface Areas of Existing Steel Structures".

2. Install proposed Fill Plate A and bearing stiffeners at the prop. jacking/temp. shoring location indicated in the "Steel Repair R16.6 - Elevation" and erect prop. Temporary Shoring tower. See Special Provision for "Temporary Shoring."

3. Jack stringer to relieve pressure at existing bearing. The jack capacities for lifting should be based on maximum expected load present during the lift derived from the reactions shown in the Beam Reaction Table included with the plans. The jack capacity provided should be between 50% and 100% greater than the maximum expected load.

4. Remove existing intermediate transverse stiffeners, stringer bearing stiffeners and elastomeric bearing within the limits of repair area. Clean/paint newly exposed faces of stringer according to the Special Provision for "Cleaning and Painting Contact Surface Areas of Existing Steel Structures".

5. Construct templates for location of existing rivets, bolts and fabrication of fill and repair plates.

6. Install proposed Fill Plates, Repair Plates, Intermediate Transverse Stiffeners, Elastomeric Bearing, and Bearing Stiffeners at end of Stringer R16.6 as indicated in the Plans.

7. Remove Temporary Shoring Tower.

BILL OF MATERIAL

ITEM	UNIT	QUANTITY
Structural Steel Repair	Pound	1,450

LEGEND

- ○ Field drill holes in new steel using existing steel as a template
- • Shop drill holes in new steel. Use new steel as template to field drill holes in existing steel.

NOTE:

1. For Sections B-B, C-C and D-D and Fill/Repair/Connection Plate details, see Sheet S03B-15.

MODEL: Default
FILE NAME: P:\2004-825 PTB195-014 HBM\WO#7 I-90 Various Overlays\Ashland Ave REV Steel Repairs\Sheet Files\0160133-62K74-S14-StructuralSteelRepairs 16.6-1.dgn
4/30/2024 10:21:14 AM

HBM ENGINEERING GROUP, LLC

USER NAME =	DESIGNED - LAB	REVISED -
	CHECKED - MI	REVISED -
PLOT SCALE =	DRAWN - LAB	REVISED -
PLOT DATE =	DATE - 4/29/2024	REVISED -

STATE OF ILLINOIS
DEPARTMENT OF TRANSPORTATION

STRUCTURAL STEEL REPAIRS AT R16.6 (SHT. 1 OF 2)
STRUCTURE NO. 016-0133 (REV)

SHEET S03B-14 OF S03B-40 SHEETS

F.A.I. RTE.	SECTION	COUNTY	TOTAL SHEETS	SHEET NO.
90/94	2020-005-BR	COOK	908	490

CONTRACT NO. 62K73

ILLINOIS | FED. AID PROJECT

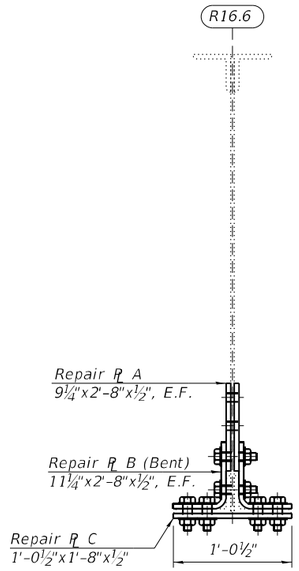

SECTION B-B

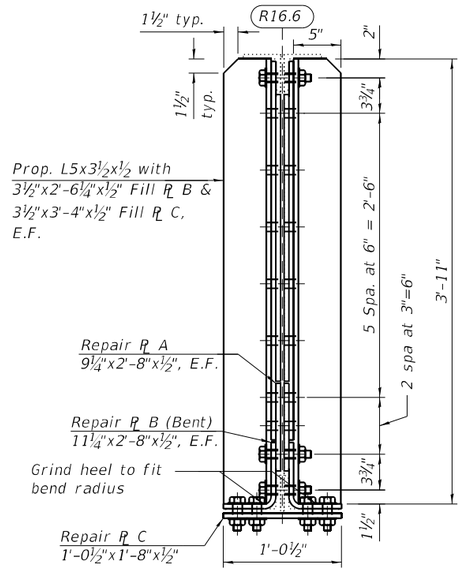

SECTION C-C

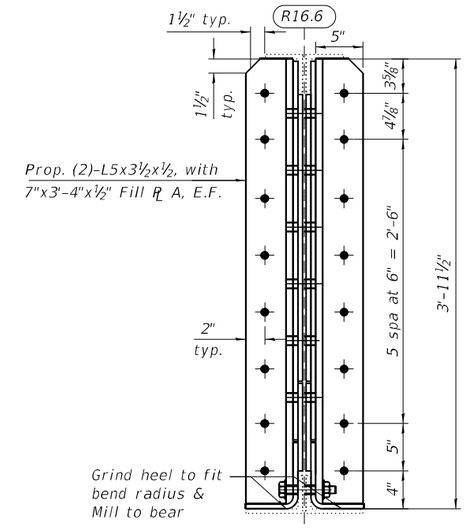

SECTION D-D

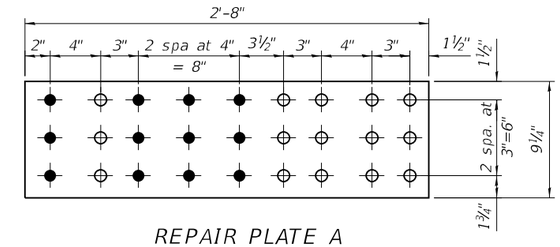

REPAIR PLATE A

(9¼"x2'-8"x½" PL)

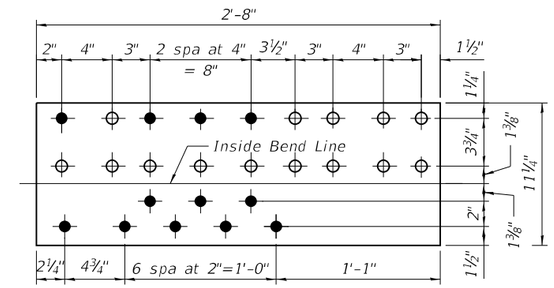

REPAIR PLATE B

(11¼"x2'-8"x½" PL)

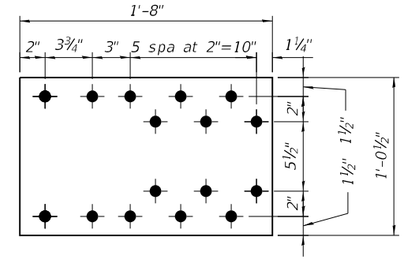

REPAIR PLATE C

(1'-0½"x1'-8"x½" PL)

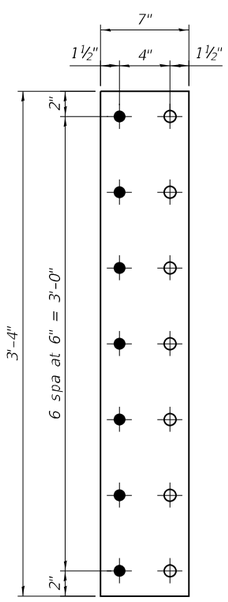

FILL PLATE A

(7"x3'-4"x½" PL)

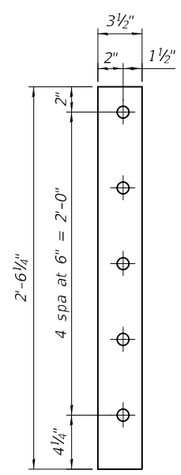

FILL PLATE B

(3½"x2'-6¼"x½" PL)

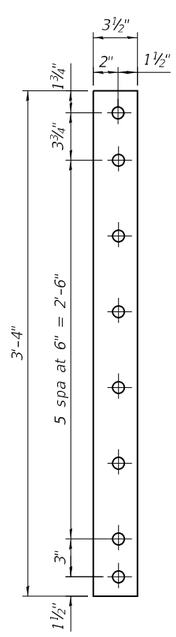

FILL PLATE C

(3½"x3'-4"x½" PL)

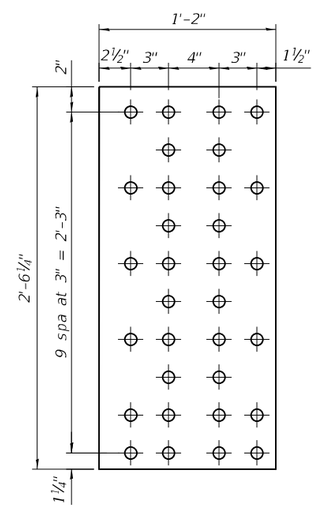

FILL PLATE D

(1'-2"x2'-6¼"x½" PL)

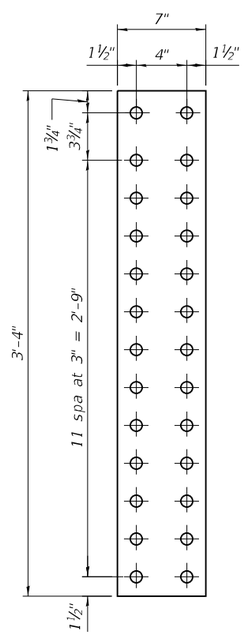

FILL PLATE E

(7"x3'-4"x½" PL)

NOTE:

1. For Bill of Material, see Sheet S03B-14.

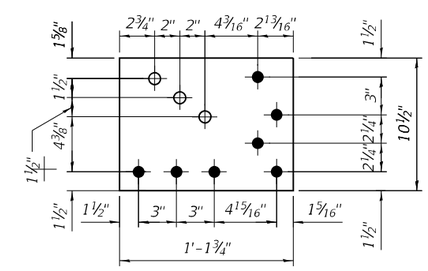

SWAY FRAME CONNECTION PLATE

(1'-1¾"x10½"x½" PL)

MODEL: Default
FILE NAME: P:\2004-825 PTB195-014 HBM\WO#7 I-90 Various Overlays\Ashland Ave REV Steel Repairs\Sheet Files\0160133-62K74-S15-StructuralSteelRepairs 16.6-2.dgn
4/30/2024 10:21:16 AM

HBM ENGINEERING GROUP, LLC

USER NAME =	DESIGNED - LAB	REVISED -
	CHECKED - MI	REVISED -
PLOT SCALE =	DRAWN - LAB	REVISED -
PLOT DATE =	DATE - 4/29/2024	REVISED -

STATE OF ILLINOIS
DEPARTMENT OF TRANSPORTATION

STRUCTURAL STEEL REPAIRS AT R16.6 (SHT. 2 OF 2)
STRUCTURE NO. 016-0133 (REV)

SHEET S03B-15 OF S03B-40 SHEETS

F.A.I. RTE.	SECTION	COUNTY	TOTAL SHEETS	SHEET NO.
90/94	2020-005-BR	COOK	908	491
		CONTRACT NO. 62K73		
		ILLINOIS	FED. AID PROJECT	

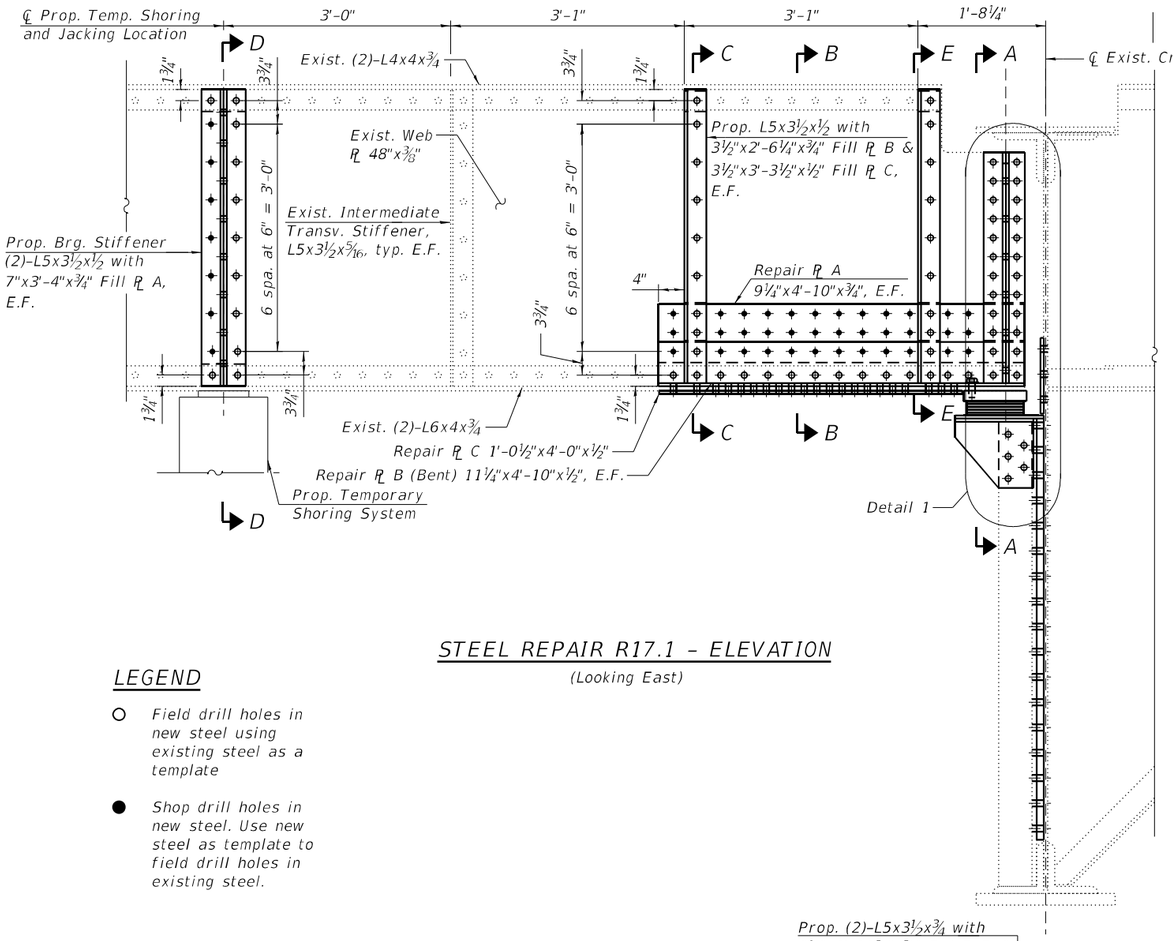

STEEL REPAIR R17.1 - ELEVATION

(Looking East)

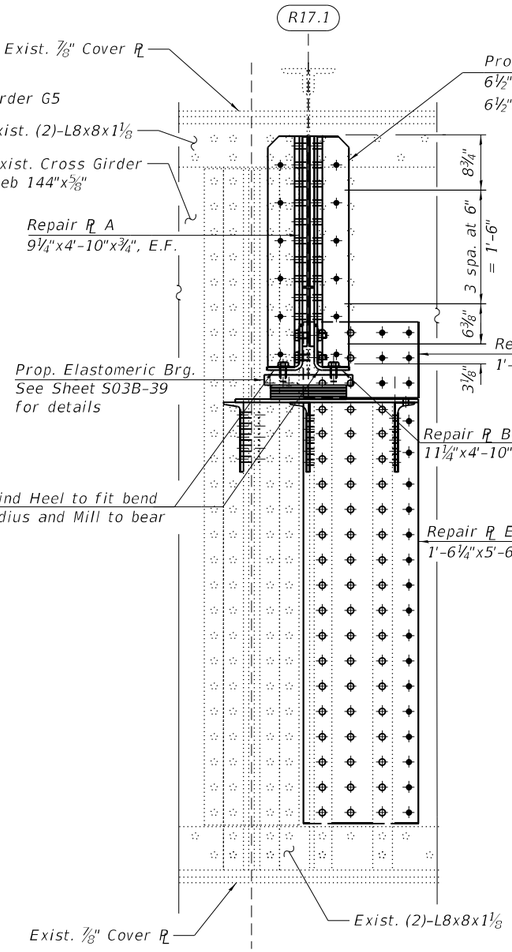

SECTION A-A

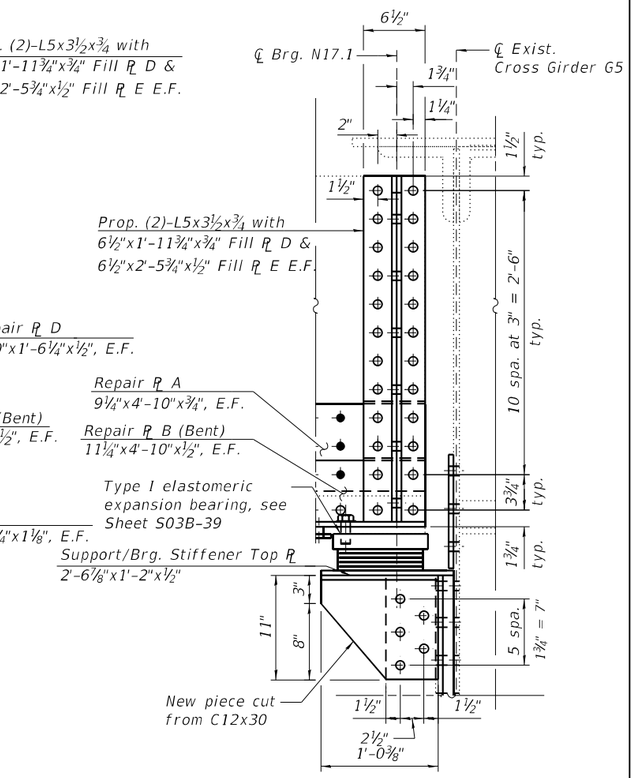

DETAIL 1

BILL OF MATERIAL

ITEM	UNIT	QUANTITY
Structural Steel Repair	Pound	2,780

*Contractor may cut existing stiffener at top of existing diaphragm. Cost included with Structural Steel Repair.

LEGEND

- ○ Field drill holes in new steel using existing steel as a template
- ● Shop drill holes in new steel. Use new steel as template to field drill holes in existing steel.

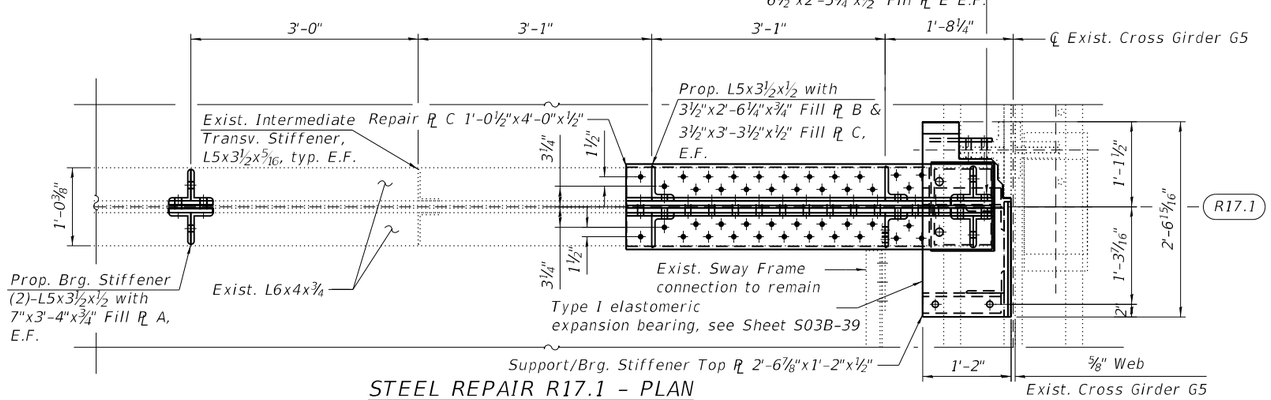

STEEL REPAIR R17.1 - PLAN

(R17.1 shown, R17.6 similar)

SUGGESTED CONSTRUCTION SEQUENCE FOR STRINGER REPAIR:

1. Remove existing intermediate transverse stiffeners at the proposed jacking/temp. shoring location indicated in the "Steel Repair R17.1 - Elevation" and clean/paint newly exposed faces of stringer web according to the Special Provision for "Cleaning and Painting Contact Surface Areas of Existing Steel Structures".
2. Install proposed Fill Plate A and bearing stiffeners at the prop. jacking/temp. shoring location indicated in the "Steel Repair R17.1 - Elevation" and erect prop. Temporary Shoring tower. See Special Provision for "Temporary Shoring."
3. Jack stringer to relieve pressure at existing bearing. The jack capacities for lifting should be based on maximum expected load present during the lift derived from the reactions shown in the Beam Reaction Table included with the plans. The jack capacity provided should be between 50% and 100% greater than the maximum expected load.
4. Remove existing intermediate transverse stiffeners, cross frame gusset plates, stringer bearing stiffeners, and elastomeric bearing within the limits of repair area. Clean/paint newly exposed faces of stringer and Girder G5 according to the Special Provision for "Cleaning and Painting Contact Surface Areas of Existing Steel Structures".
5. Construct templates for location of existing rivets, bolts and fabrication of fill and repair plates.
6. Install proposed Fill Plates, Repair Plates, Intermediate Transverse Stiffeners, Elastomeric Bearing and Bearing Stiffeners at end of Stringer R17.1 as indicated in the Plans.
7. Remove Temporary Shoring Tower.

NOTE:

1. For Sections B-B, C-C, D-D and E-E, Fill and Repair Plate details, see Sheet S03B-17.

MODEL: Default
FILE NAME: P:\2004-823 PTB195-014 HBM\WO#7 I-90 Various Overlays\Ashland Ave REV Steel Repairs\Sheet Files\0160133-62K74-S16-StructuralSteelRepairs 17.1-1.dgn
4/30/2024 10:21:23 AM

HBM ENGINEERING GROUP, LLC

USER NAME =	DESIGNED - LAB, EN	REVISED -
	CHECKED - MI	REVISED -
PLOT SCALE =	DRAWN - EN	REVISED -
PLOT DATE =	DATE - 4/29/2024	REVISED -

STATE OF ILLINOIS
DEPARTMENT OF TRANSPORTATION

STRUCTURAL STEEL REPAIRS AT R17.1 (SHT. 1 OF 2)
STRUCTURE NO. 016-0133 (REV)

SHEET S03B-16 OF S03B-40 SHEETS

F.A.I. RTE.	SECTION	COUNTY	TOTAL SHEETS	SHEET NO.
90/94	2020-005-BR	COOK	908	492
		CONTRACT NO. 62K73		
	ILLINOIS	FED. AID PROJECT		

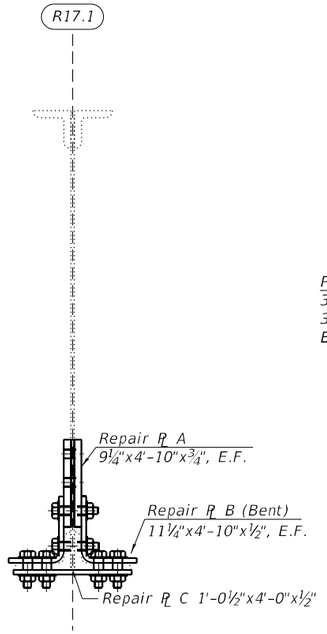

SECTION B-B

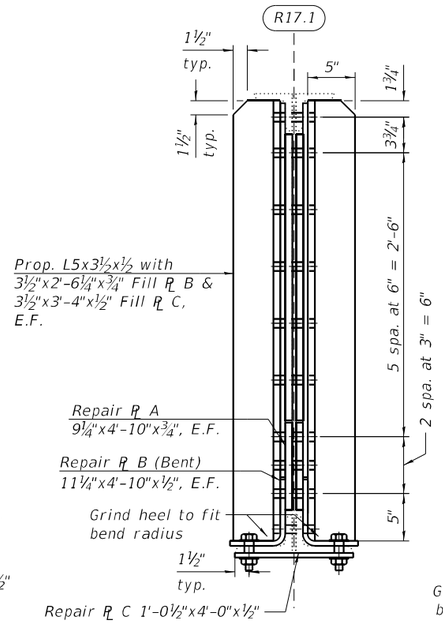

SECTION C-C

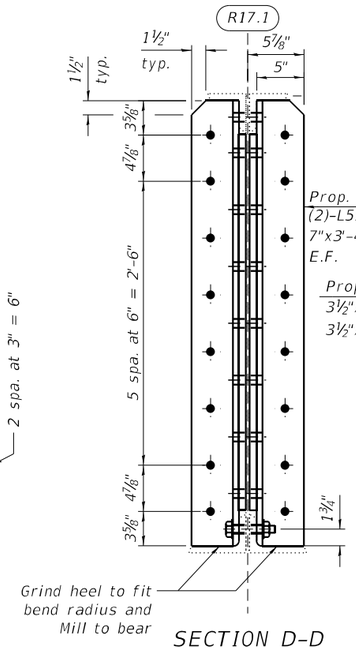

SECTION D-D

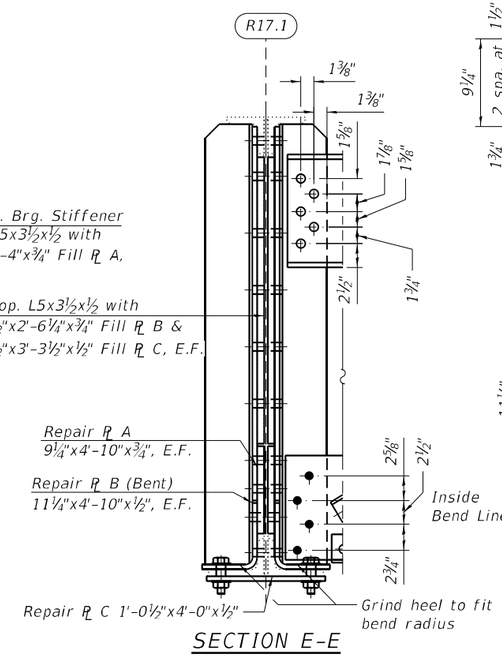

SECTION E-E

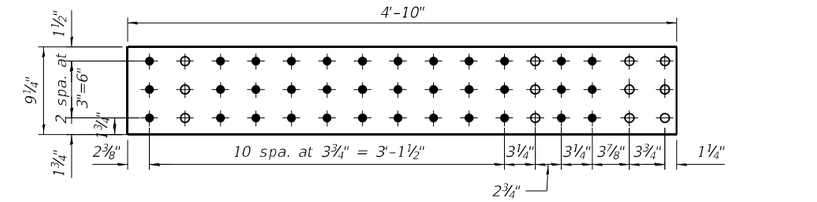

REPAIR PLATE A

(9¼"x4'-10"x¾" PL)

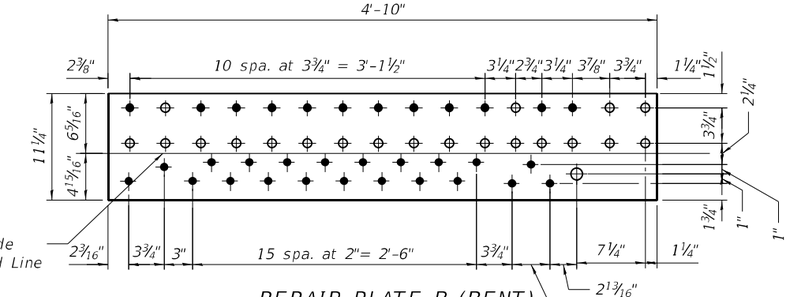

REPAIR PLATE B (BENT)

(Unfolded View)
(11¼"x4'-10"x½" PL)

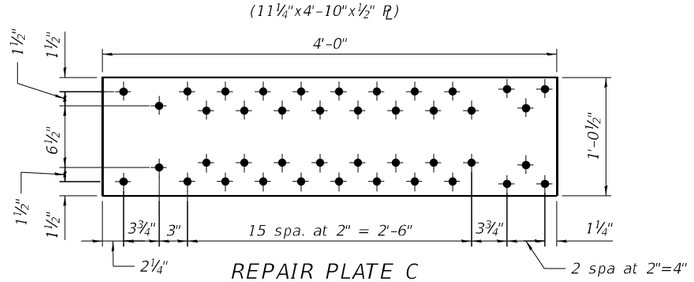

REPAIR PLATE C

(1'-0½"x4'-0"x½" PL)

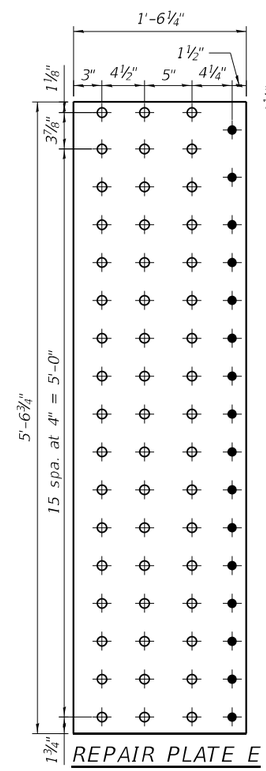

REPAIR PLATE E

(5'-6¾"x1'-6¼"x1⅛" PL)

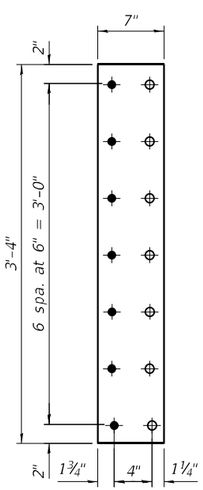

FILL PLATE A

(7"x3'-4"x¾" PL)

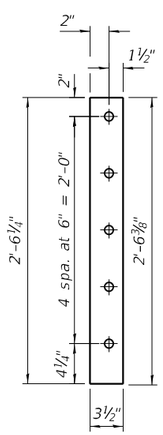

FILL PLATE B

(3½"x2'-6¼"x¾" PL)

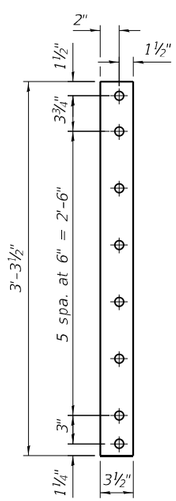

FILL PLATE C

(3½"x3'-3½"x½" PL)

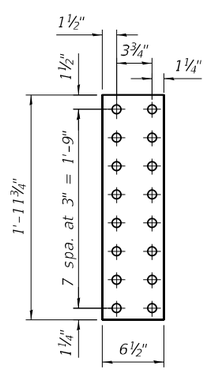

FILL PLATE D

(6½"x1'-11¾"x¾" PL)

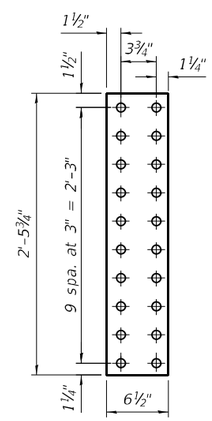

FILL PLATE E

(6½"x2'-5¾"x½" PL)

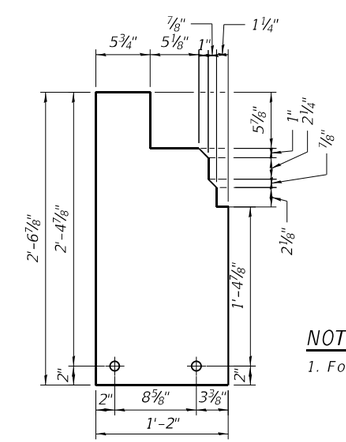

SUPPORT/BRG. STIFFENER TOP PLATE

(2'-6⅞"x1'-2"x½" PL)

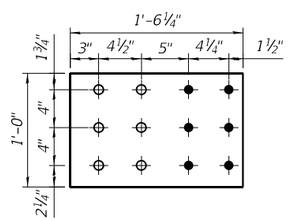

REPAIR PLATE D

(1'-0"x1'-6¼"x½" PL)

NOTE:

1. For Bill of Material, see Sheet S03B-16.

FILE NAME:

HBM ENGINEERING GROUP, LLC

USER NAME =	DESIGNED - LAB, EN	REVISED -	
	CHECKED - MI	REVISED -	
PLOT SCALE =	DRAWN - EN	REVISED -	
PLOT DATE =	DATE - 4/29/2024	REVISED -	

STATE OF ILLINOIS
DEPARTMENT OF TRANSPORTATION

STRUCTURAL STEEL REPAIRS AT R17.1 (SHT. 2 OF 2)
STRUCTURE NO. 016-0133 (REV)

SHEET S03B-17 OF S03B-40 SHEETS

F.A.I. RTE.	SECTION	COUNTY	TOTAL SHEETS	SHEET NO.
90/94	2020-005-BR	COOK	908	493
		CONTRACT NO. 62K73		
		ILLINOIS	FED. AID PROJECT	

4/30/2024 10:21:26 AM

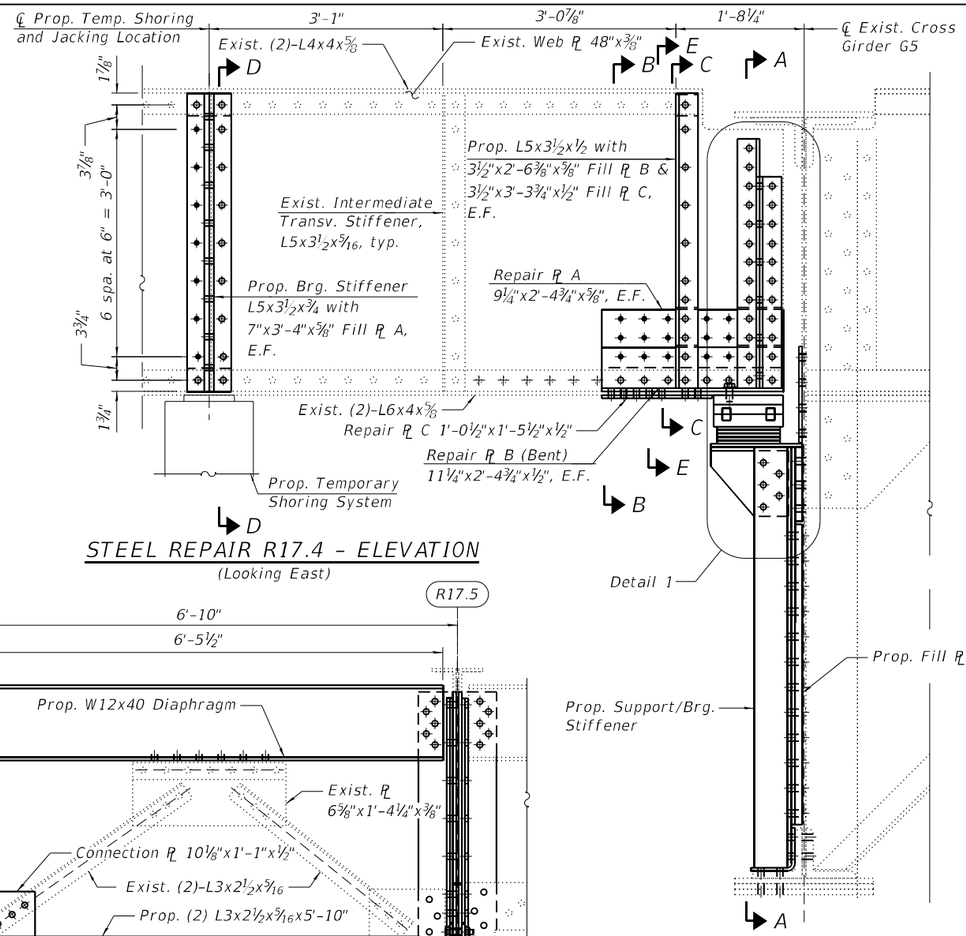

STEEL REPAIR R17.4 - ELEVATION

(Looking East)

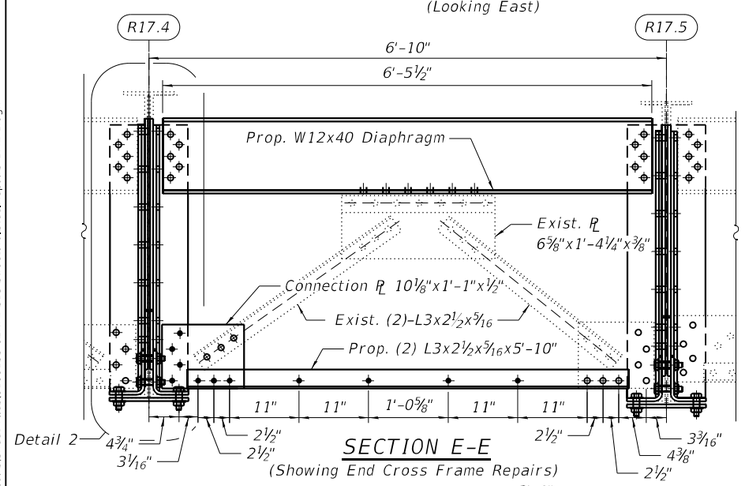

SECTION E-E

(Showing End Cross Frame Repairs)

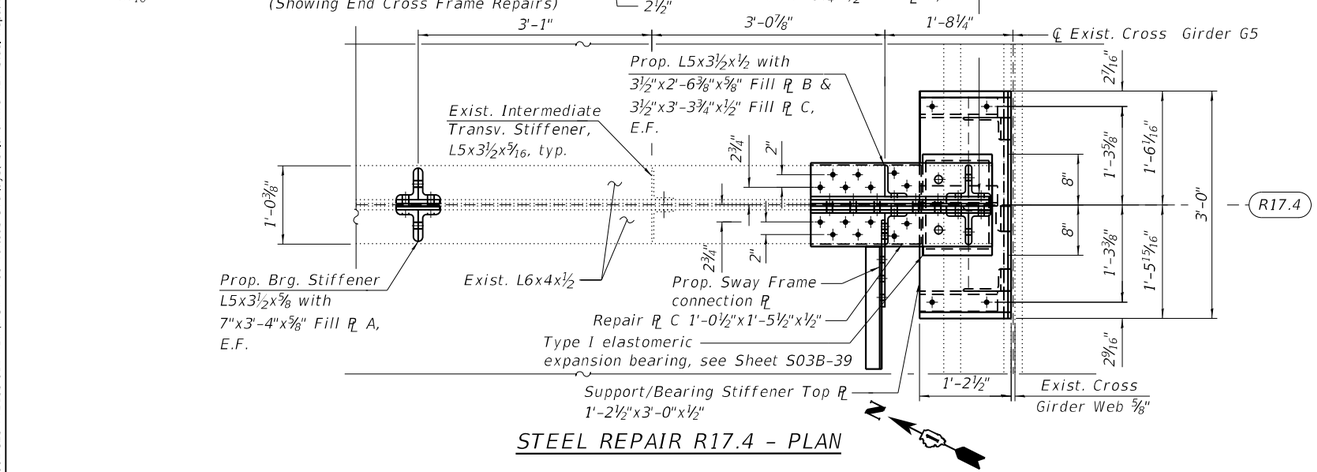

STEEL REPAIR R17.4 - PLAN

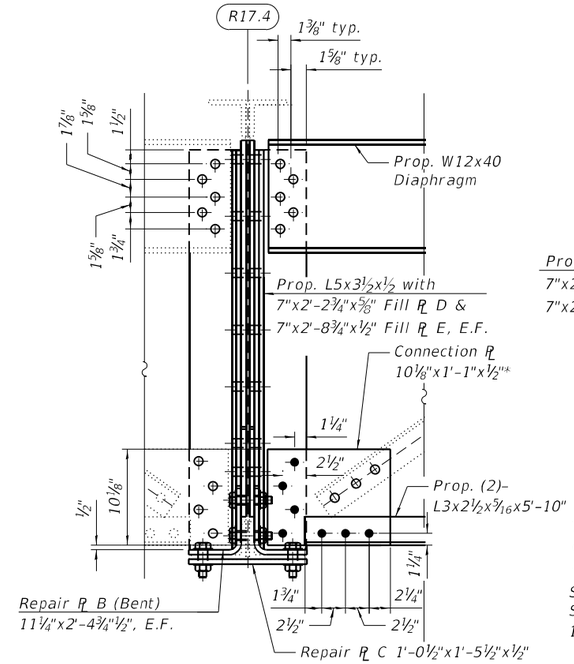

DETAIL 2

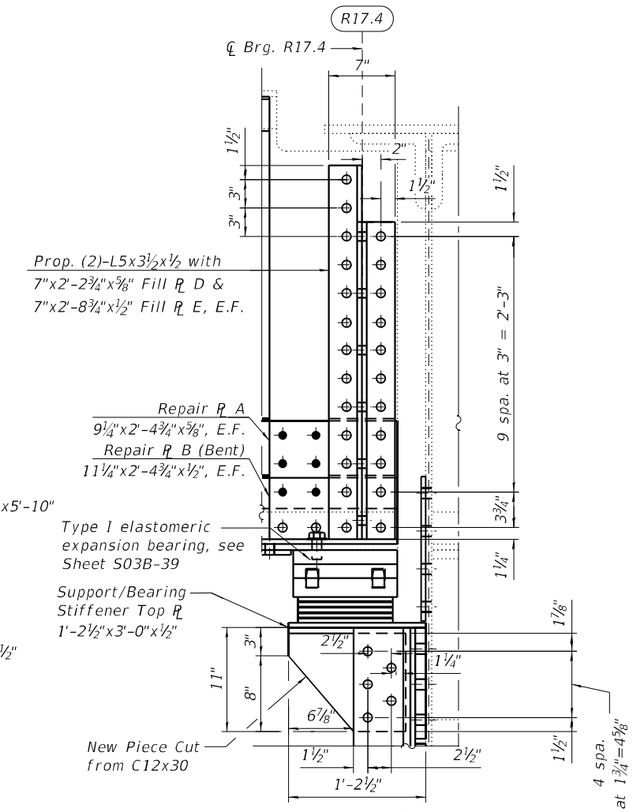

DETAIL 1

LEGEND

- ○ Field drill holes in new steel using existing steel as a template
- ● Shop drill holes in new steel. Use new steel as template to field drill holes in existing steel.

NOTES:

1. For Sections A-A thru D-D, Detail 3, and Repair Plate D. see Sheet S03B-19.
2. For remaining repair plates, and all fill and connection plate details, see Sheet S03B-20.

BILL OF MATERIAL

ITEM	UNIT	QUANTITY
Structural Steel Repair	Pound	3,130

*Contractor may cut existing stiffener at top of existing diaphragm. Cost included with Structural Steel Repair.

Includes quantities for bottom PL D at the girder and R17.4-R17.5 Sway Frame PL and angles.

SUGGESTED CONSTRUCTION SEQUENCE FOR STRINGER REPAIR:

1. Remove existing intermediate transverse stiffeners at the proposed jacking/temp. shoring location indicated in the "Steel Repair R17.4 - Elevation" and clean/paint newly exposed faces of stringer web according to the Special Provision for "Cleaning and Painting Contact Surface Areas of Existing Steel Structures".
2. Install proposed Fill Plate A and bearing stiffeners at the prop. jacking/temp. shoring location indicated in the "Steel Repair R17.4 - Elevation" and erect prop. Temporary Shoring tower. See Special Provision for "Temporary Shoring."
3. Jack stringer to relieve pressure at existing bearing. The jack capacities for lifting should be based on maximum expected load present during the lift derived from the reactions shown in the Beam Reaction Table included with the plans. The jack capacity provided should be between 50% and 100% greater than the maximum expected load.
4. Remove existing intermediate transverse stiffeners, cross frame gusset plates, stringer bearing stiffeners, elastomeric bearing, support bracket and associated support/bearing stiffeners within the limits of repair area. Clean/paint newly exposed faces of stringer and Girder G5 according to the Special Provision for "Cleaning and Painting Contact Surface Areas of Existing Steel Structures".
5. Construct templates for location of existing rivets, bolts and fabrication of fill and repair plates.
6. Install proposed Repair Plate at Girder G5 bottom flange, south face. Install proposed Fill Plates, Repair Plates, Support/Brg. Stiffeners and elastomeric bearing at the connection of Stringer R17.4 to Girder G5.
7. Install proposed Fill Plates, Repair Plates, Intermediate Transverse Stiffeners and Bearing Stiffeners at end of Stringer R17.4 as indicated in the Plans.
8. Remove Temporary Shoring Tower.

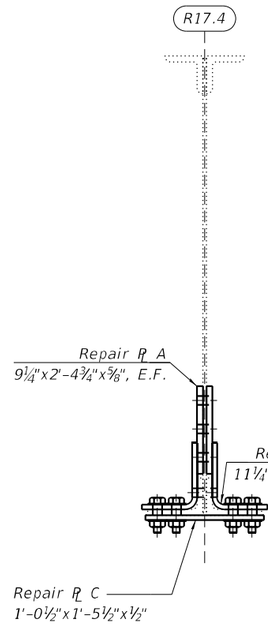

SECTION B-B

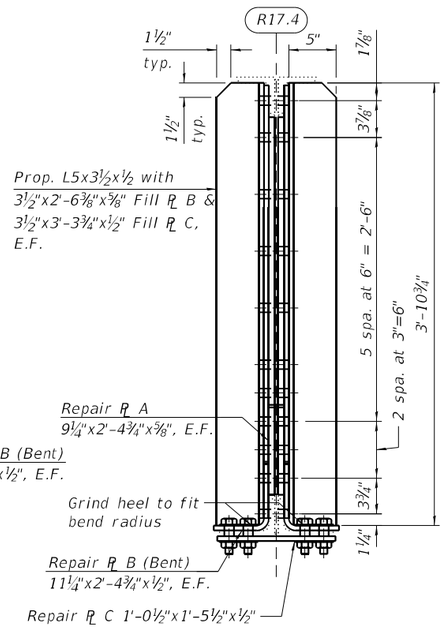

SECTION C-C

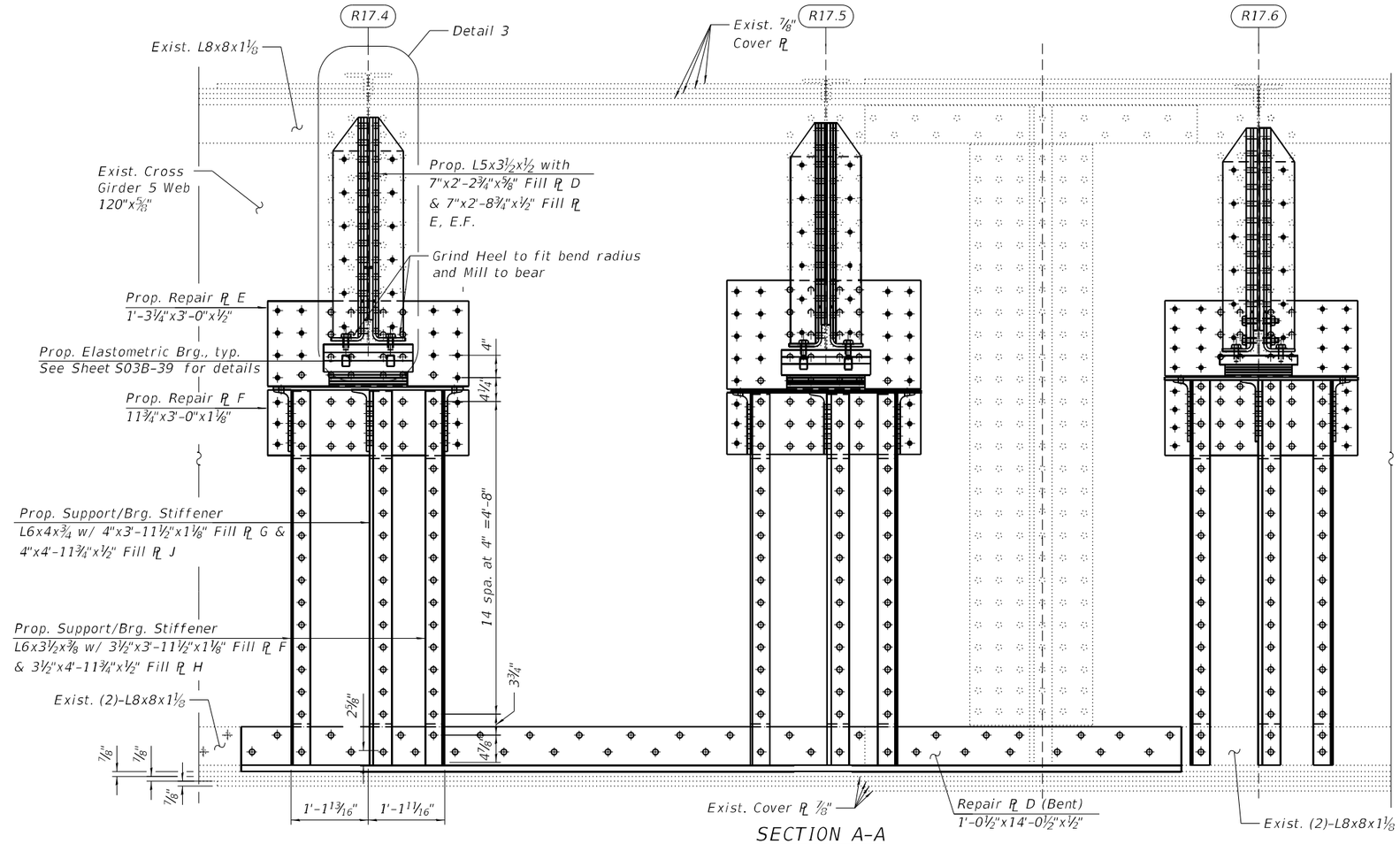

SECTION A-A

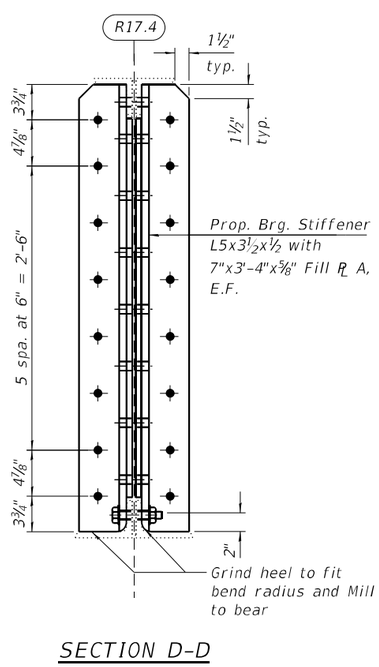

SECTION D-D

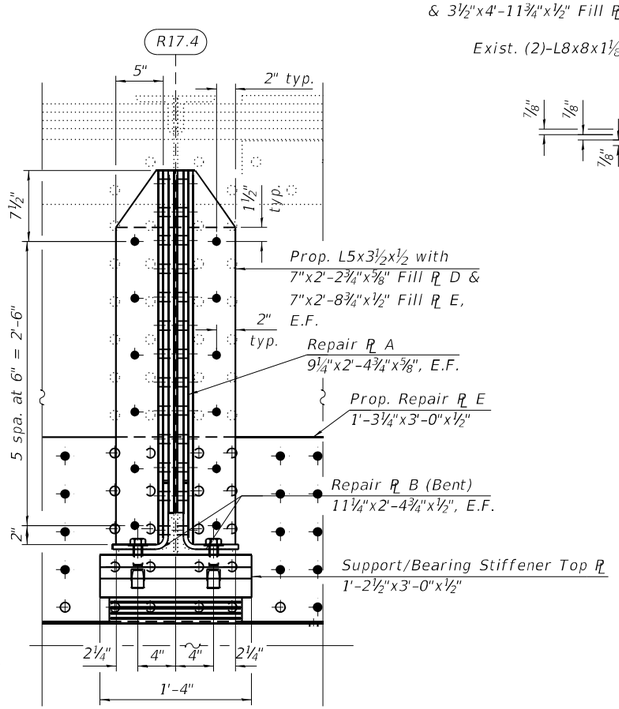

DETAIL 3

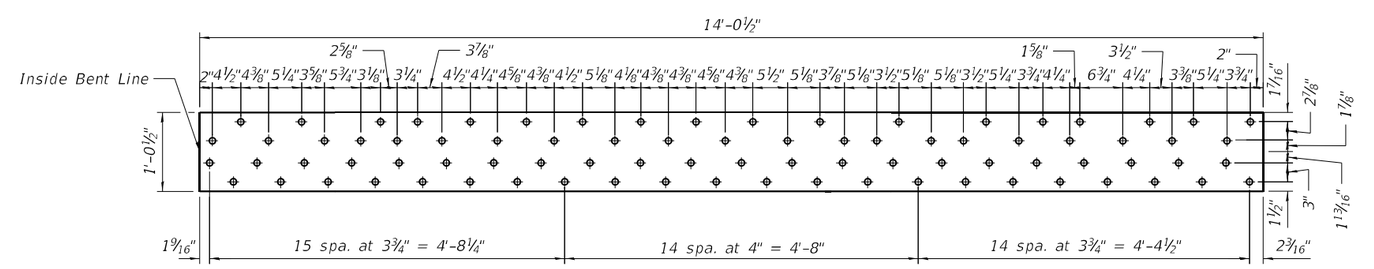

REPAIR PLATE D (BENT)

(1'-0½"x14'-0½"x½" PL)

NOTES:

1. For Fill/Repair Plates details, and Connection/Support Brg. Stiffener Top Plate Details, see Sheet S03B-20.

2. For Bill of Material, see Sheet S03B-18.

*For Connection PL bolt spacing, see Sheet S03B-20.

MODEL: Default
FILE NAME: P:\2004-823 PTB 195-014 HBM\WO#7 I-90 Various Overlays\Ashland Ave REV Steel Repairs\Sheet Files\0160133-62K74-S19-StructuralSteelRepairs 17.4-2.dgn
7/2/2024 1:18:38 PM

HBM ENGINEERING GROUP, LLC

USER NAME =	DESIGNED - LAB	REVISED -	
	CHECKED - MI	REVISED -	
PLOT SCALE =	DRAWN - LAB, EN	REVISED -	
PLOT DATE =	DATE - 4/29/2024	REVISED -	

STATE OF ILLINOIS
DEPARTMENT OF TRANSPORTATION

STRUCTURAL STEEL REPAIRS AT R17.4 (SHT. 2 OF 3)
STRUCTURE NO. 016-0133 (REV)

SHEET S03B-19 OF S03B-40 SHEETS

F.A.I. RTE.	SECTION	COUNTY	TOTAL SHEETS	SHEET NO.
90/94	2020-005-BR	COOK	908	495
		CONTRACT NO. 62K73		
		ILLINOIS	FED. AID PROJECT	

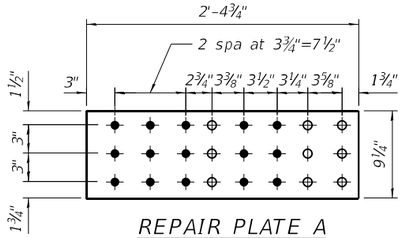

REPAIR PLATE A

(9¼"x2'-4¾"x⅝" PL)

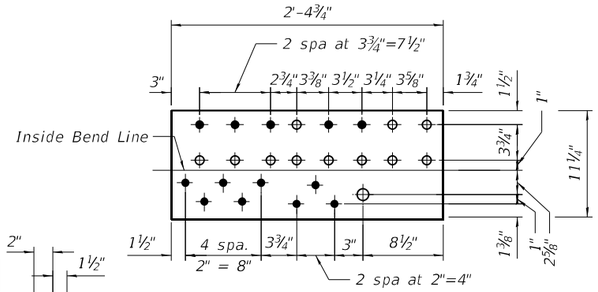

REPAIR PLATE B (BENT)

(11¼"x2'-4¾"x½" PL)

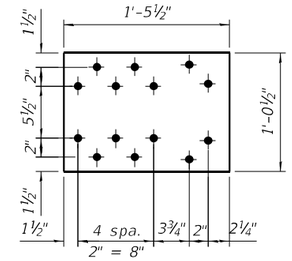

REPAIR PLATE C

(1'-0½"x1'-5½"x½" PL)

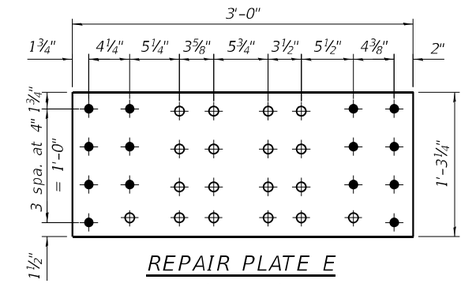

REPAIR PLATE E

(1'-3¼"x3'-0"x½" PL)

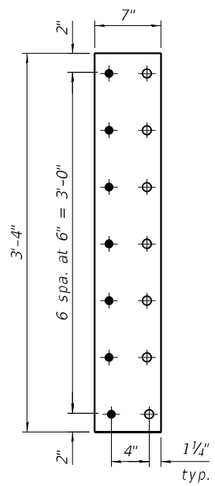

FILL PLATE A

(7"x3'-4"x⅝" PL)

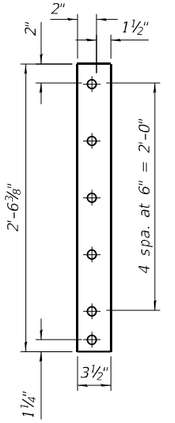

FILL PLATE B

(3½"x2'-6⅞"x⅝" PL)

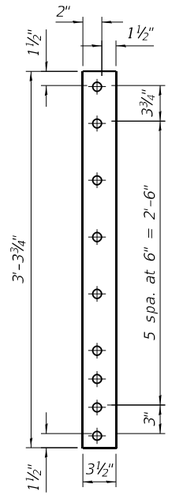

FILL PLATE C

(3½"x3'-3¾"x½" PL)

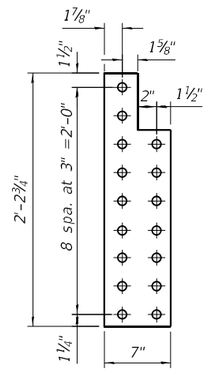

FILL PLATE D

(7"x2'-2¾"x⅜" PL)

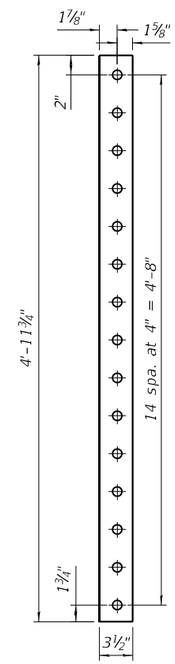

FILL PLATE H

(3½"x4'-11¾"x½" PL)

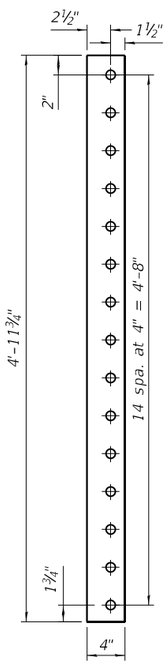

FILL PLATE J

(4"x4'-11¾"x½" PL)

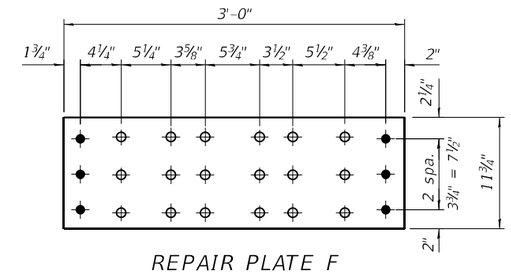

REPAIR PLATE F

(11¾"x3'-0"x1⅛" PL)

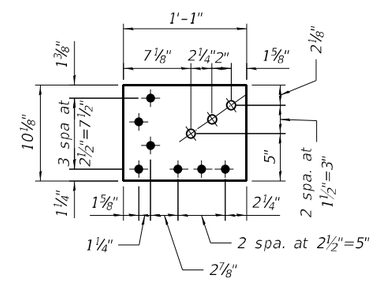

CONNECTION PLATE

(10⅛"x1'-1"x½" PL)

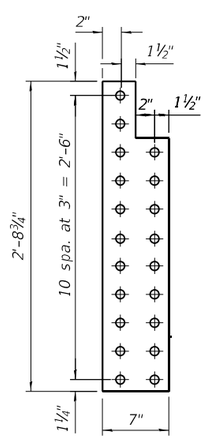

FILL PLATE E

(7"x2'-8¾"x½" PL)

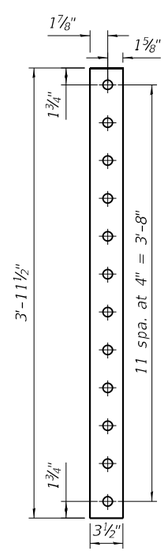

FILL PLATE F

(3½"x3'-11½"x1⅛" PL)

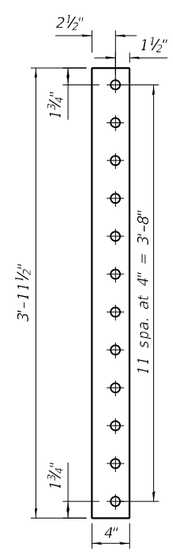

FILL PLATE G

(4"x3'-11½"x1⅛" PL)

NOTE:

1. For Bill of Material, see Sheet S03B-18.

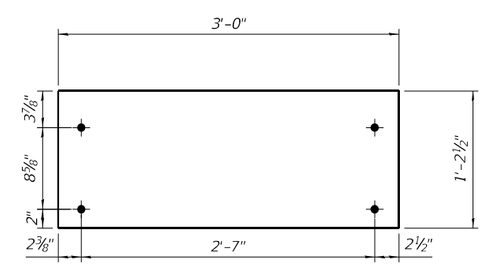

SUPPORT/BRG. STIFFENER TOP PLATE

(1'-2½"x3'-0"x½" PL)

MODEL: Default
FILE NAME: P:\2004-823 PTB195-014 HBM\WO#7 I-90 Various Overlays\Ashland Ave REV Steel Repairs\Sheet Files\0160133-62K74-S20A-StructuralSteelRepairs 17.4-3.dgn
4/30/2024 10:21:38 AM

HBM ENGINEERING GROUP, LLC

USER NAME =	DESIGNED - LAB	REVISED -	
	CHECKED - MI	REVISED -	
PLOT SCALE =	DRAWN - LAB, EN	REVISED -	
PLOT DATE =	DATE - 4/29/2024	REVISED -	

STATE OF ILLINOIS
DEPARTMENT OF TRANSPORTATION

STRUCTURAL STEEL REPAIRS AT R17.4 (SHT. 3 OF 3)
STRUCTURE NO. 016-0133 (REV)

SHEET S03B-20 OF S03B-40 SHEETS

F.A.I. RTE.	SECTION	COUNTY	TOTAL SHEETS	SHEET NO.
90/94	2020-005-BR	COOK	908	496
		CONTRACT NO. 62K73		
	ILLINOIS	FED. AID PROJECT		

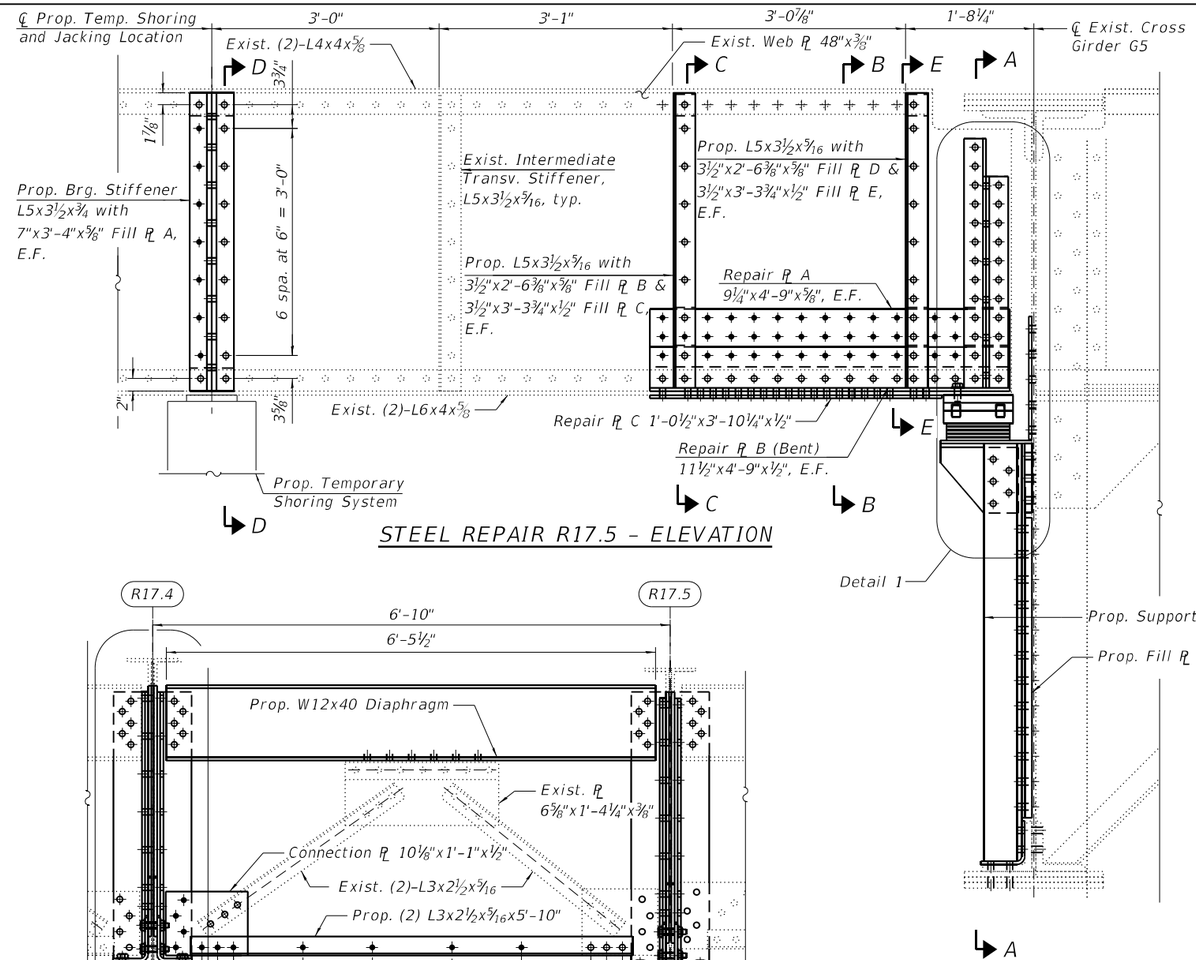

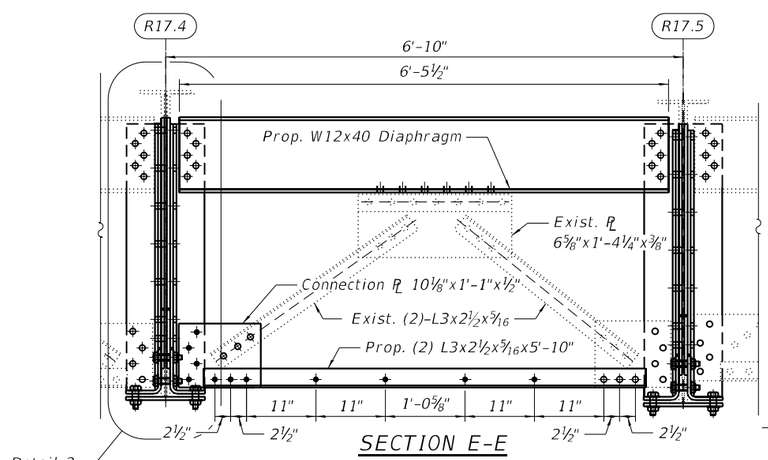

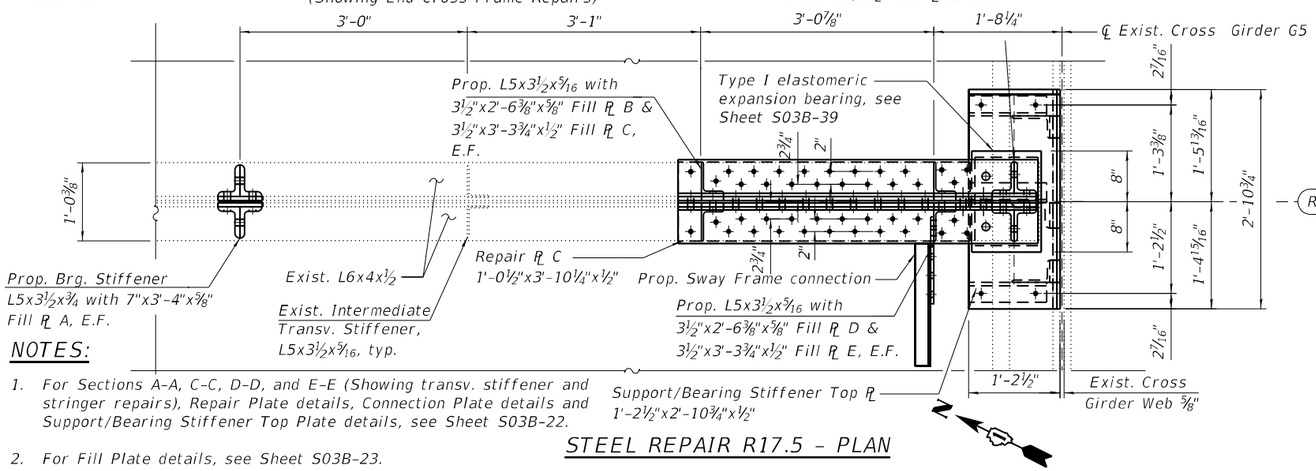

NOTES:

1. For Sections A-A, C-C, D-D, and E-E (Showing transv. stiffener and stringer repairs), Repair Plate details, Connection Plate details and Support/Bearing Stiffener Top Plate details, see Sheet S03B-22.
2. For Fill Plate details, see Sheet S03B-23.

LEGEND

- ○ Field drill holes in new steel using existing steel as a template
- ● Shop drill holes in new steel. Use new steel as template to field drill holes in existing steel.

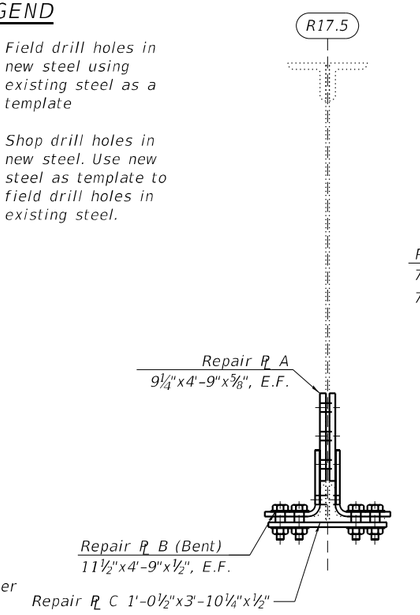

SECTION B-B

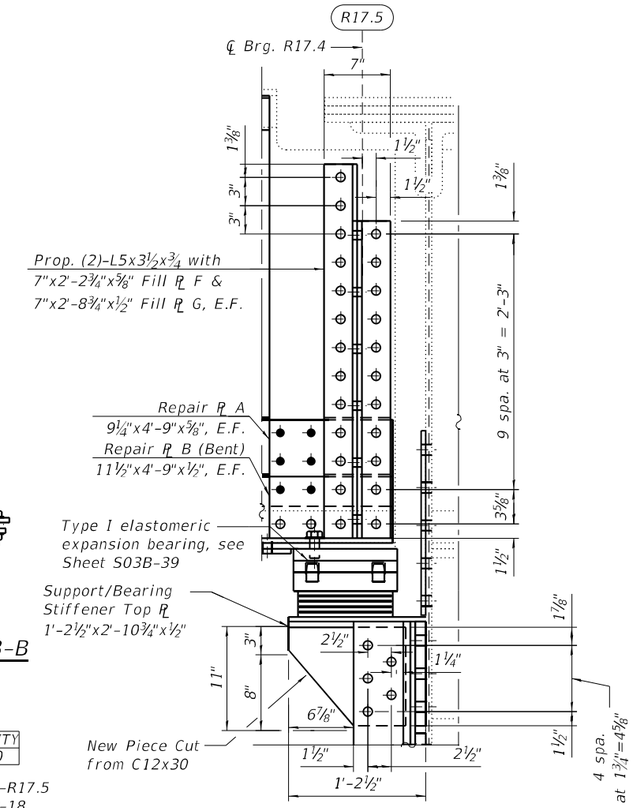

DETAIL 1

BILL OF MATERIAL

ITEM	UNIT	QUANTITY
Structural Steel Repair	Pound	2,710

Quantities for bottom PL D at the girder and R17.4-R17.5 Sway Frame PL and angles included on Sheet S03B-18.

*Contractor may cut existing stiffener at top of existing diaphragm. Cost included with Structural Steel Repair.

SUGGESTED CONSTRUCTION SEQUENCE FOR STRINGER REPAIR:

1. Remove existing intermediate transverse stiffeners at the proposed jacking/temp. shoring location indicated in the "Steel Repair R17.5 - Elevation" and clean/paint newly exposed faces of stringer web according to the Special Provision for "Cleaning and Painting Contact Surface Areas of Existing Steel Structures".
2. Install proposed Fill Plate A and bearing stiffeners at the prop. jacking/temp. shoring location indicated in the "Steel Repair R17.5 - Elevation" and erect prop. Temporary Shoring tower. See Special Provision for "Temporary Shoring."
3. Jack stringer to relieve pressure at existing bearing. The jack capacities for lifting should be based on maximum expected load present during the lift derived from the reactions shown in the Beam Reaction Table included with the plans. The jack capacity provided should be between 50% and 100% greater than the maximum expected load.
4. Remove existing intermediate transverse stiffeners, cross frame gusset plates, stringer bearing stiffeners, elastomeric bearing, support bracket and associated support/bearing stiffeners within the limits of repair area. Clean/paint newly exposed faces of stringer and Girder G5 according to the Special Provision for "Cleaning and Painting Contact Surface Areas of Existing Steel Structures".
5. Construct templates for location of existing rivets, bolts and fabrication of fill and repair plates.
6. Install proposed Repair Plate at Girder G5 bottom flange, south face. Install proposed Fill Plates, Repair Plates, Support/Brg. Stiffeners and elastomeric bearing at the connection of Stringer R17.5 to Girder G5.
7. Install proposed Fill Plates, Repair Plates, Intermediate Transverse Stiffeners and Bearing Stiffeners at end of Stringer R17.5 as indicated in the Plans.
8. Install Cross Frame between R17.4 & R17.5.
9. Remove Temporary Shoring Tower.

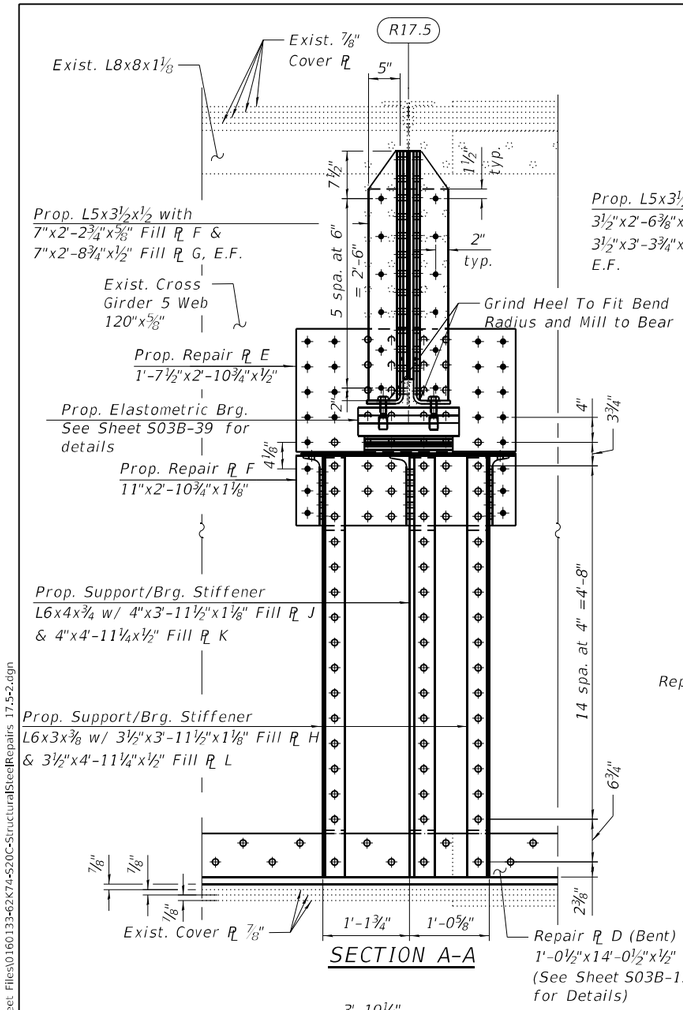

SECTION A-A

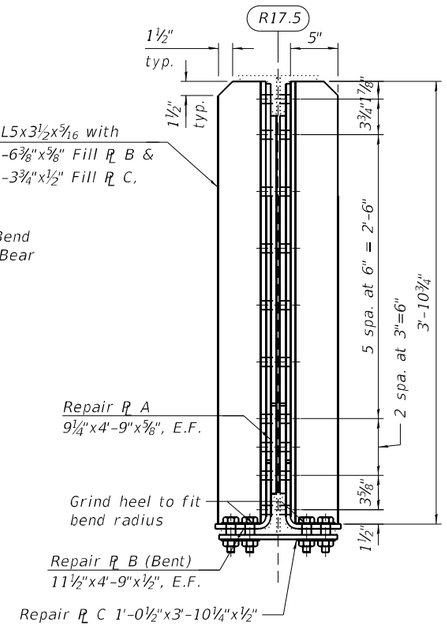

SECTION C-C

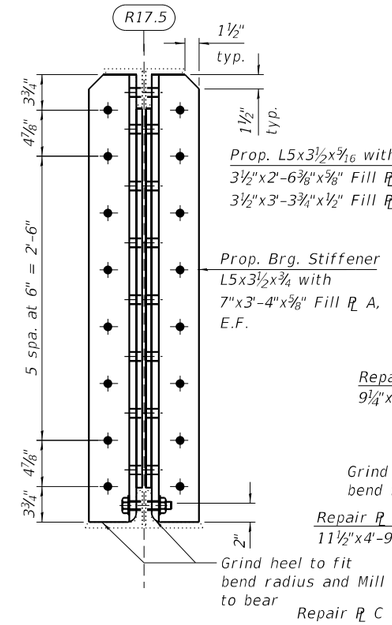

SECTION D-D

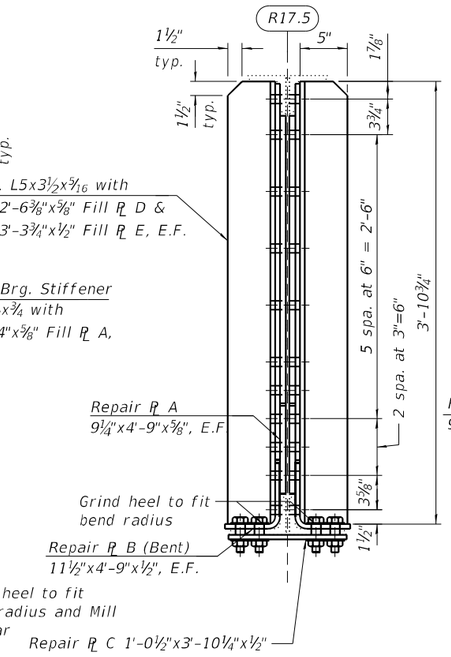

SECTION E-E

(Showing transv. stiffener and stringer repairs)

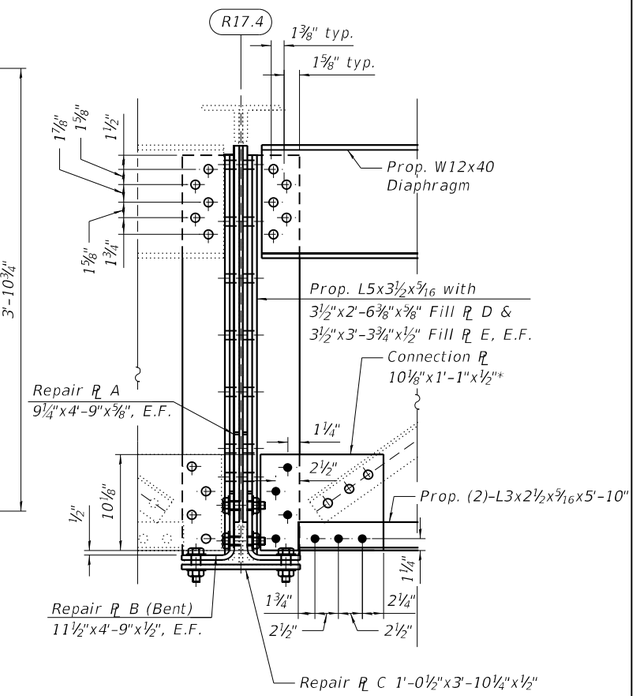

DETAIL 2

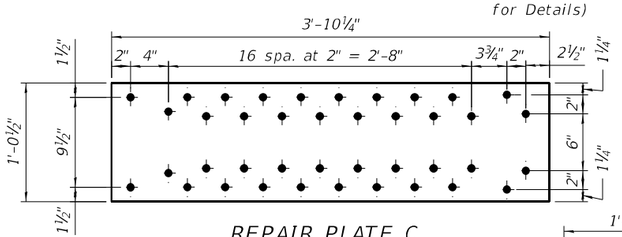

REPAIR PLATE C

(1'-0½"x3'-10¼"x½" PL)

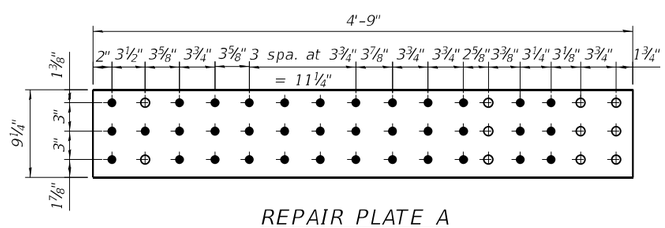

REPAIR PLATE A

(9¼"x4'-9"x⅝" PL)

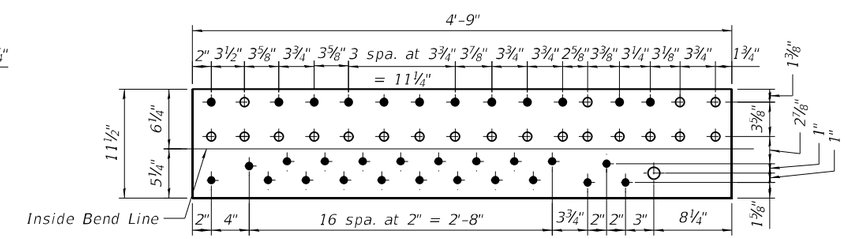

REPAIR PLATE B (Bent)

(11½"x4'-9"x½" PL)

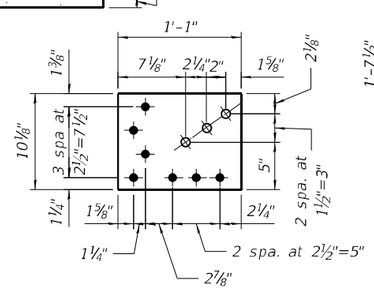

CONNECTION PLATE

(10⅛"x1'-1"x½" PL)

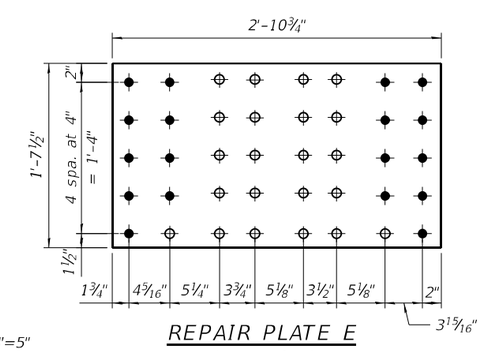

REPAIR PLATE E

(1'-7½"x2'-10¾"x½" PL)

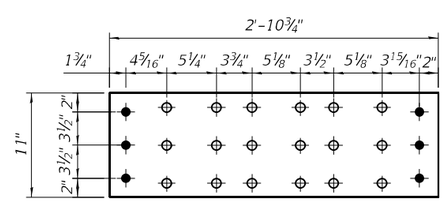

REPAIR PLATE F

(11"x2'-10¾"x1⅛")

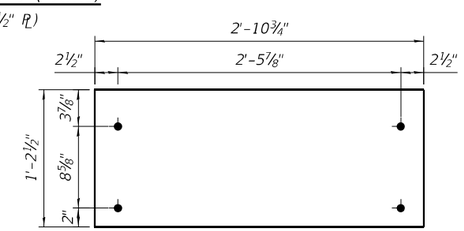

SUPPORT/BRG. STIFFENER TOP PLATE

(1'-2½"x2'-10¾"x½" PL)

NOTE:

1. For Bill of Material, see Sheet S03B-21.

HBM ENGINEERING GROUP, LLC	USER NAME =	DESIGNED - LAB, JJS	REVISED -	STATE OF ILLINOIS DEPARTMENT OF TRANSPORTATION	STRUCTURAL STEEL REPAIRS AT R17.5 (SHT. 2 OF 3) STRUCTURE NO. 016-0133 (REV)
		CHECKED - MI	REVISED -		
	PLOT SCALE =	DRAWN - LAB, EN	REVISED -		
	PLOT DATE =	DATE - 4/29/2024	REVISED -		SHEET S03B-22 OF S03B-40 SHEETS

F.A.I. RTE.	SECTION	COUNTY	TOTAL SHEETS	SHEET NO.
90/94	2020-005-BR	COOK	908	498
		CONTRACT NO. 62K73		
		ILLINOIS	FED. AID PROJECT	

MODEL: Default
FILE NAME: P:\2004-825 PTB 195-014 HBM\WO#7 I-90 Various Overlays\Ashland Ave REV Steel Repairs\Sheet Files\0160133-62K74-520C-StructuralSteelRepairs 17.5-2.dgn
7/2/2024 1:18:43 PM

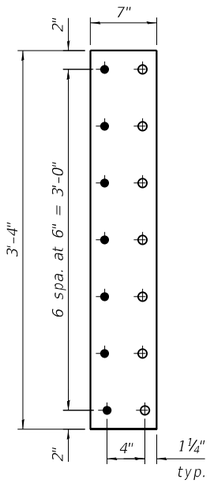

FILL PLATE A

(7"x3'-4"x⅝" PL)

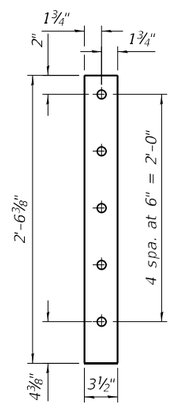

FILL PLATE B

(3½"x2'-6⅜"x⅝" PL)

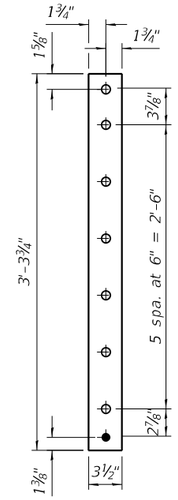

FILL PLATE C

(3½"x3'-3¾"x½" PL)

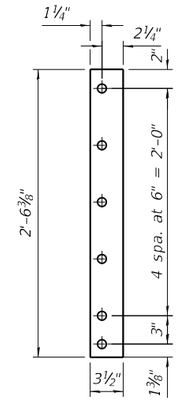

FILL PLATE D

(3½"x2'-6⅜"x⅝" PL)

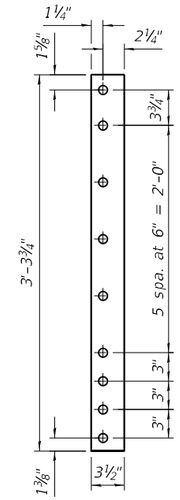

FILL PLATE E

(3½"x3'-3¾"x½" PL)

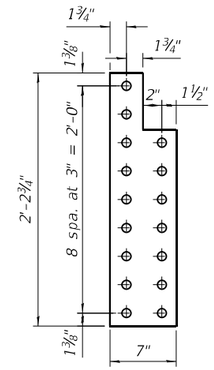

FILL PLATE F

(7"x2'-2¾"x⅝" PL)

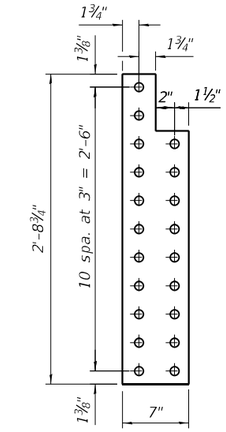

FILL PLATE G

(7"x2'-8¾"x½" PL)

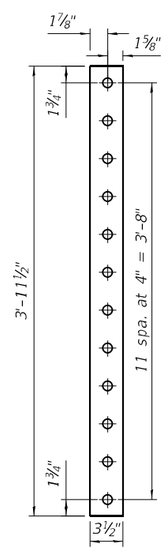

FILL PLATE H

(3½"x3'-11½"x1⅛")

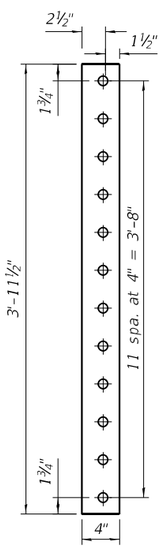

FILL PLATE J

(4"x3'-11½"x1⅛" PL)

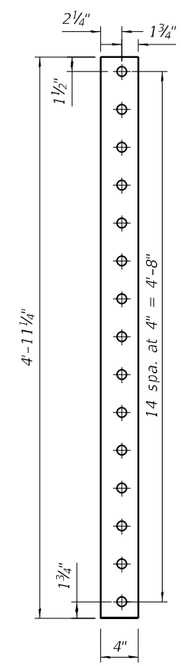

FILL PLATE K

(4"x4'-11¼"x½" PL)

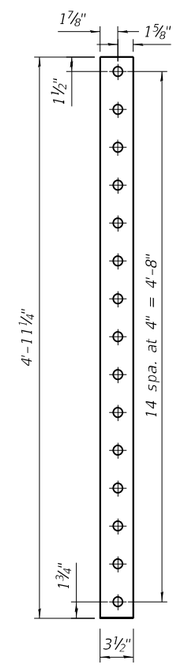

FILL PLATE L

(3½"x4'-11¼"x½" PL)

NOTE:

1. For Bill of Material, see Sheet S03B-21.

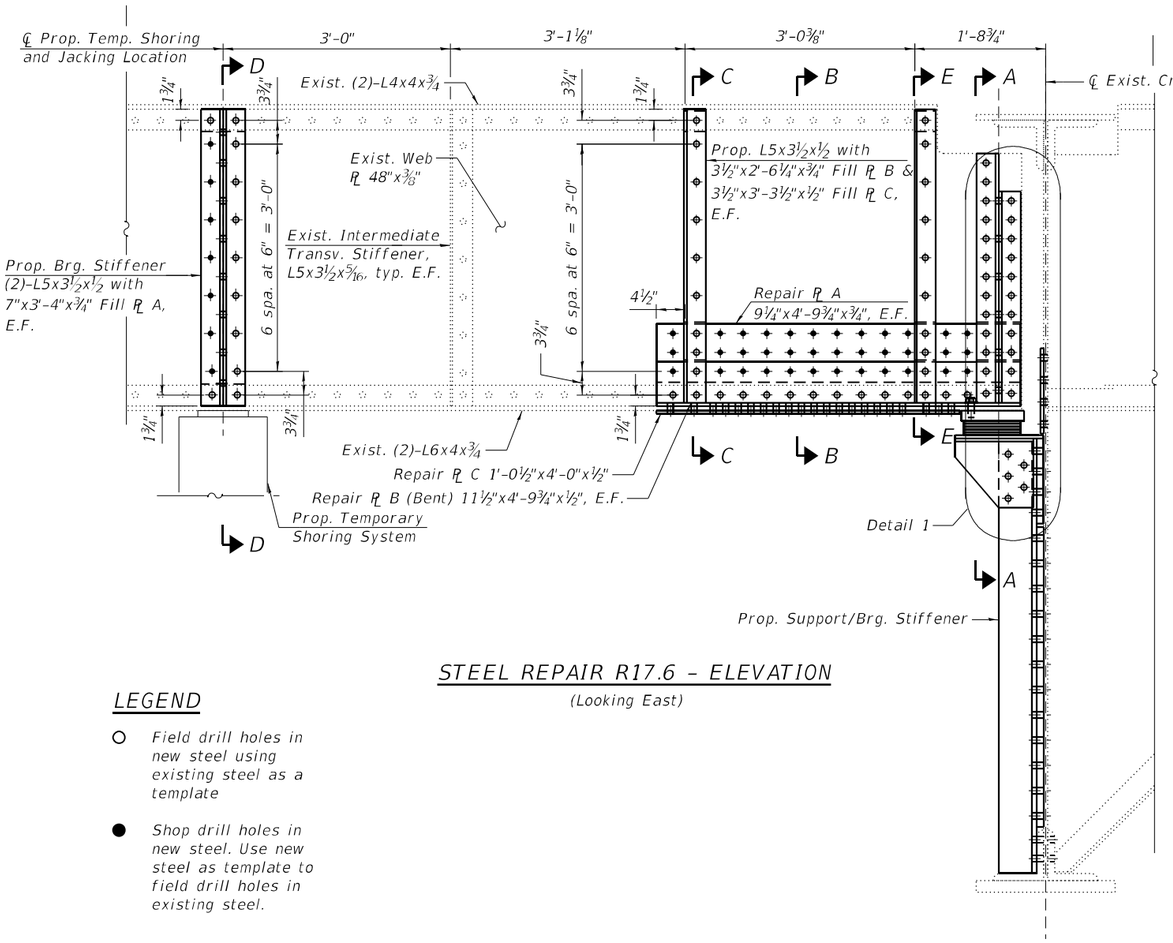

STEEL REPAIR R17.6 - ELEVATION

(Looking East)

LEGEND

- ○ Field drill holes in new steel using existing steel as a template
- ● Shop drill holes in new steel. Use new steel as template to field drill holes in existing steel.

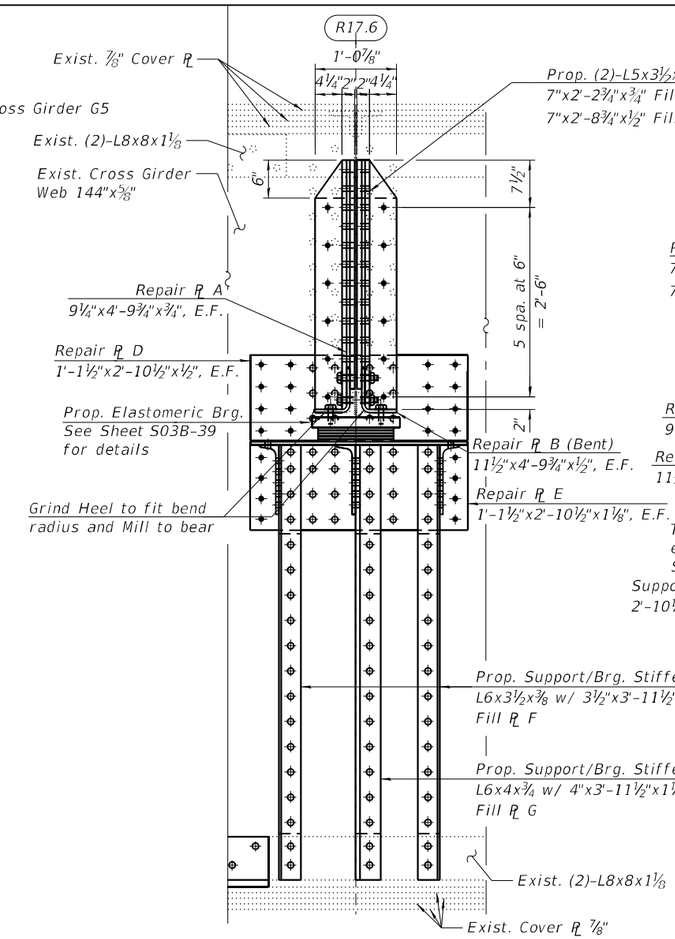

SECTION A-A

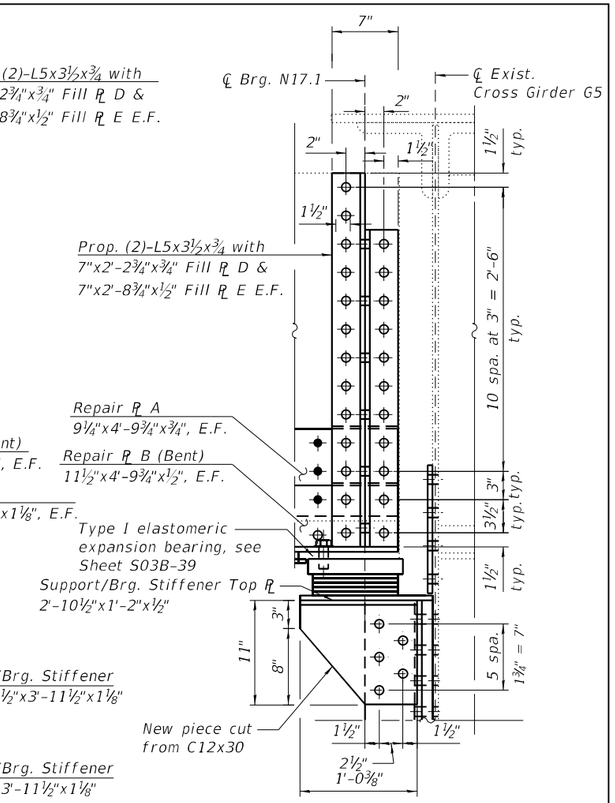

DETAIL 1

BILL OF MATERIAL

ITEM	UNIT	QUANTITY
Structural Steel Repair	Pound	2,320

*Contractor may cut existing stiffener at top of existing diaphragm. Cost included with Structural Steel Repair.

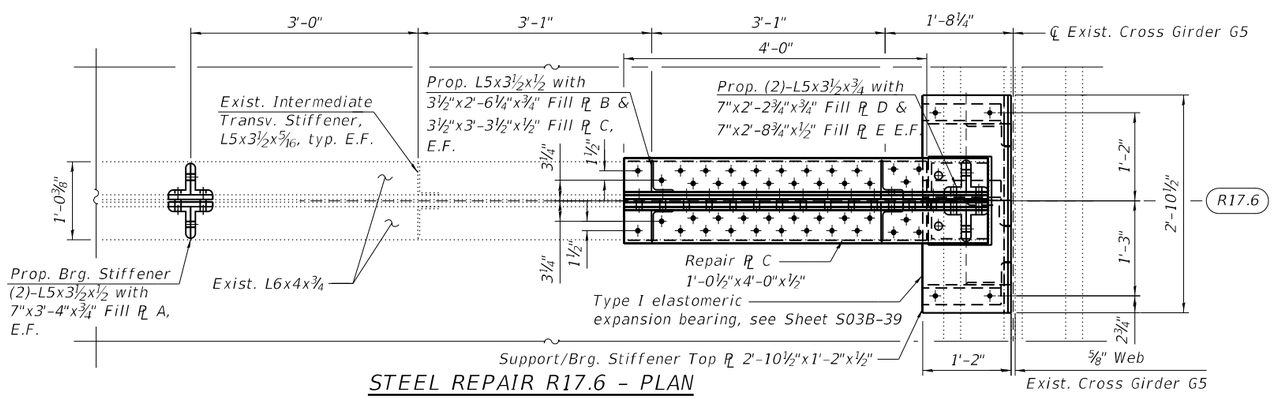

STEEL REPAIR R17.6 - PLAN

SUGGESTED CONSTRUCTION SEQUENCE FOR STRINGER REPAIR:

1. Remove existing intermediate transverse stiffeners at the proposed jacking/temp. shoring location indicated in the "Steel Repair R17.6 - Elevation" and clean/paint newly exposed faces of stringer web according to the Special Provision for "Cleaning and Painting Contact Surface Areas of Existing Steel Structures".
2. Install proposed Fill Plate A and bearing stiffeners at the prop. jacking/temp. shoring location indicated in the "Steel Repair R17.6 - Elevation" and erect prop. Temporary Shoring tower. See Special Provision for "Temporary Shoring."
3. Jack stringer to relieve pressure at existing bearing. The jack capacities for lifting should be based on maximum expected load present during the lift derived from the reactions shown in the Beam Reaction Table included with the plans. The jack capacity provided should be between 50% and 100% greater than the maximum expected load.
4. Remove existing intermediate transverse stiffeners, cross frame gusset plates, stringer bearing stiffeners, and elastomeric bearing within the limits of repair area. Clean/paint newly exposed faces of stringer and Girder G5 according to the Special Provision for "Cleaning and Painting Contact Surface Areas of Existing Steel Structures".
5. Construct templates for location of existing rivets, bolts and fabrication of fill and repair plates.
6. Install proposed Fill Plates, Repair Plates, Intermediate Transverse Stiffeners, Elastomeric Bearings and Bearing Stiffeners at end of Stringer R17.6 as indicated in the Plans.
7. Remove Temporary Shoring Tower.

NOTE:

1. For Sections B-B, C-C, D-D and E-E, and Fill/Repair/Support Brg. Stiffener Top Plate details, see Sheet S03B-25.