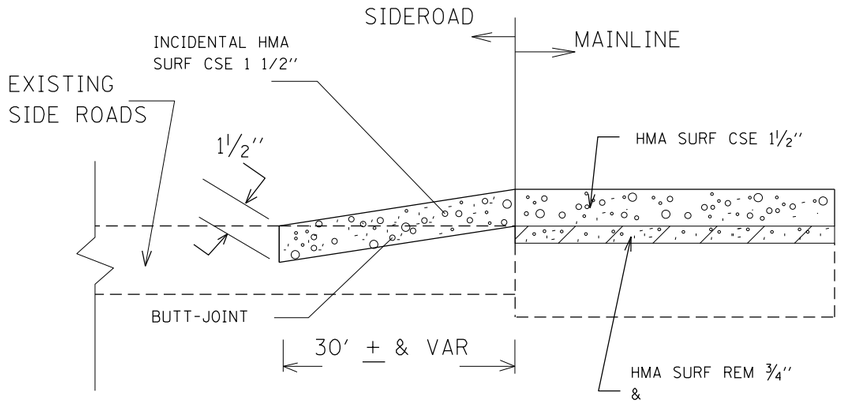


CASE 1

TREATMENT FOR CONCRETE OR BITUMINOUS SIDEROADS WITHOUT MAINLINE GUTTER

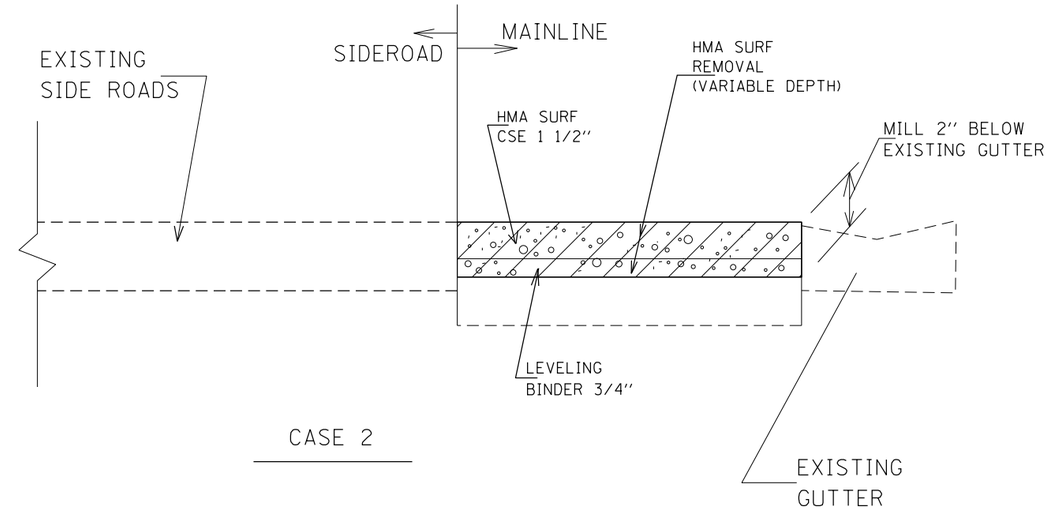


CASE 2

NO TREATMENT FOR SIDEROADS ENTRANCE OR DRIVEWAY WITH MAINELINE GUTTER

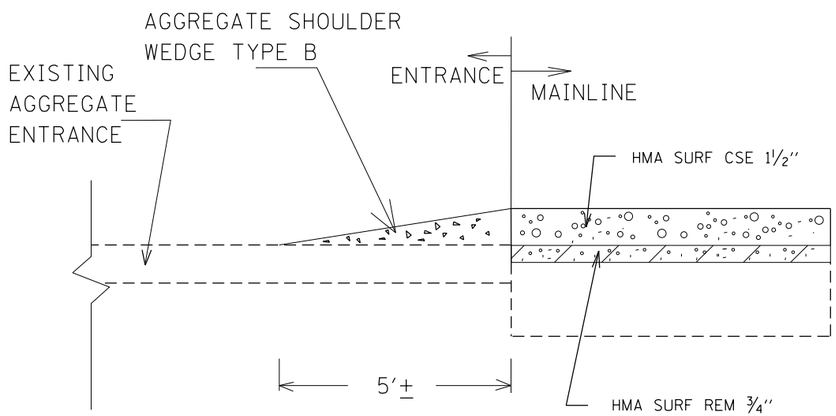


CASE 3

TREATMENT FOR EARTH OR AGGREGATE ENTRANCES AND DRIVEWAYS WITHOUT MAINLINE COMB. CONC. CURB & GUTTER

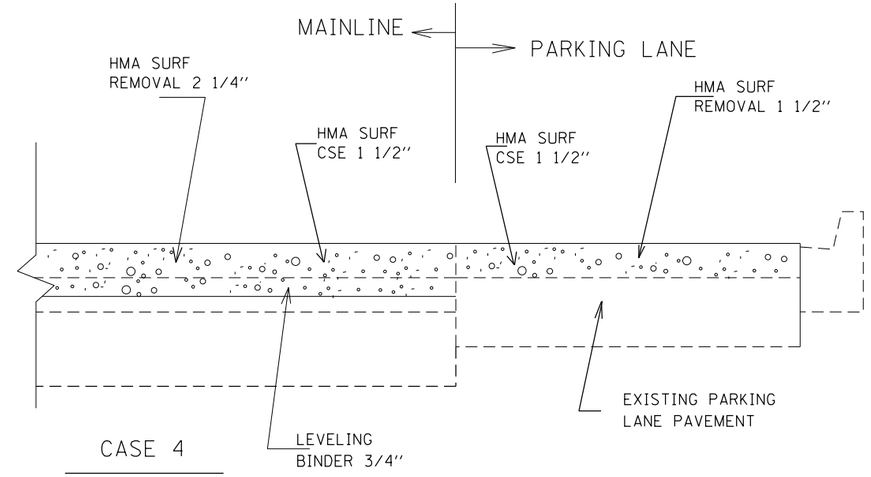


CASE 4

PARKING LANE TREATMENT IN THE TOWN OF BRIMFIELD (BOTH SIDES)

| | | | | | | | | | | |
|---|---|---|---|---|---|---|---|---|---|---|
| FILE NAME = | USER NAME = | DESIGNED - | REVISED - | STATE OF ILLINOIS DEPARTMENT OF TRANSPORTATION | SIDEROAD, ENTRANCE & DRIVEWAY TREATMENT | F.A. RTE. FAS 2402 | SECTION (110,111,112,113)RS-3; | COUNTY | TOTAL SHEETS | SHEET NO. |
| | | DRAWN - | REVISED - | | | U.S. 150 | 114RS-4;112C-2 | PEORIA | 76 | 43 |
| | PLOT SCALE = | CHECKED - | REVISED - | | SCALE: SHEET NO. OF SHEETS STA. TO STA. | FED AID PROJECT | | CONTRACT NO. 68614 | | |
| | PLOT DATE = 3/20/2013 | DATE - | REVISED - | | | | | | | |