F.A.P. RTE.	SECTION	COUNTY	TOTAL SHEETS	SHEET NO.
307	13ON-3 (1)	DUPAGE	141	52
STA.		TO STA.		
FED. ROAD DIST. NO.	ILLINOIS	FED. AID PROJECT		

60R46

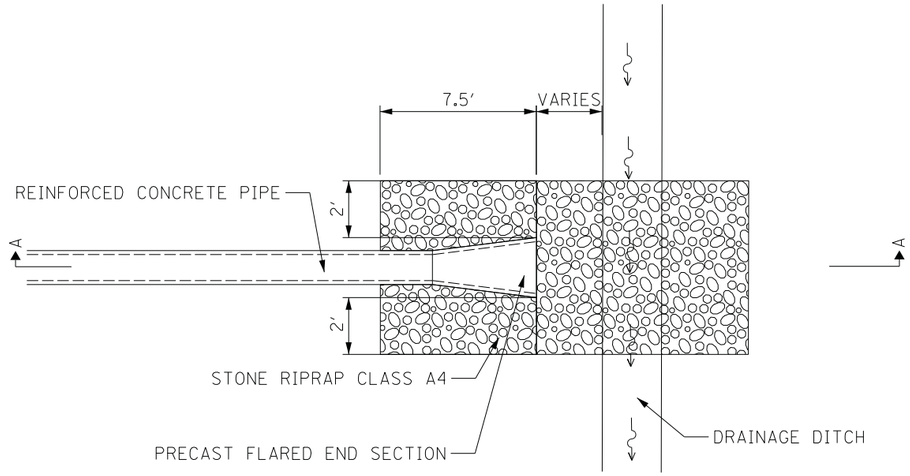

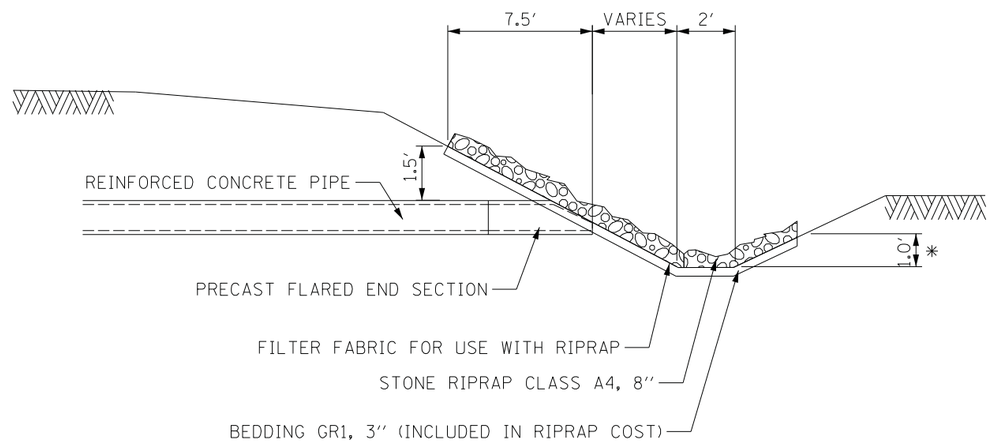

SECTION A-A

STONE RIPRAP PROTECTION DETAIL

* WHEN DITCH IS LESS THAN 1' PLACE RIP RAP TO TOP OF BACKSLOPE

DRND-1

NOTE:

1. SEE STANDARD 542301 FOR DIMENSIONS OF FLARED END SECTIONS

AECOM

REVISIONS	
NAME	DATE

ILLINOIS DEPARTMENT OF TRANSPORTATION
F.A.P. ROUTE 307 (ILLINOIS ROUTE 64)

DRAINAGE DETAILS - RIPRAP DETAIL

SCALE: NONE
DRAWN BY: KNO
DATE: FEBRUARY 1, 2013
CHECKED BY: EEY