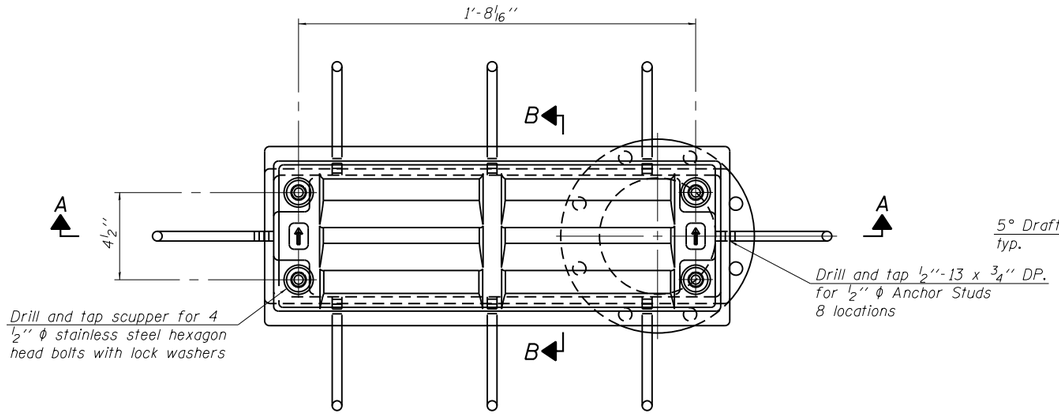

PLAN

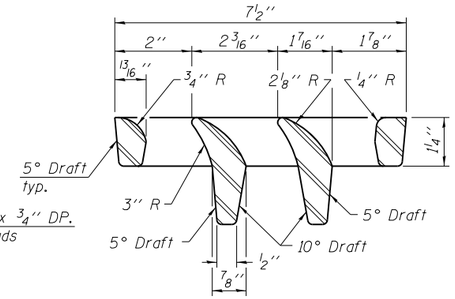

VANE GRATE DETAIL

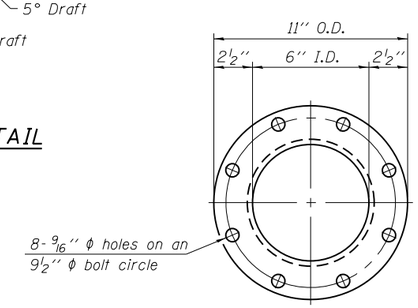

Notes:

All cast iron parts shall be gray iron conforming to the requirements of AASHTO M 105, Class 35B.

Bolts, anchor studs, washers and nuts shall conform to the requirements of ASTM A 307 and shall be galvanized according to AASHTO M 232.

Downspouts located on the exterior side of a painted steel fascia beam shall be painted with the finish coat specified for the exterior side of the fascia beam.

As an alternate, bolts, anchor studs, washers and nuts may be stainless steel according to Article 1006.29(d) of the Standard Specifications.

Structural steel weldments of equal sections and of the same configuration may be substituted for the cast iron scupper frame. Fillet or full penetration welds shall be used for the weldments. Details shall be submitted to the Engineer for approval. Structural steel weldments shall not be substituted for the cast iron scupper grate. Structural steel frames and downspouts shall be galvanized according to AASHTO M111.

The Contractor shall take appropriate measures to assure that Protective Coat is not applied to the scupper.

Cost of the Grate, Frame, Downspout, Anchor Studs, Bolts, Washers and Nuts including complete installation of the scupper shall be paid for at the contract unit price each for Drainage Scuppers, DS-12.

Alternate fiberglass downspout conforming to ASTM D 2996 with a short-time rupture strength hoop tensile stress of 30,000 psi min. may be used in lieu of the cast iron or steel equivalent.

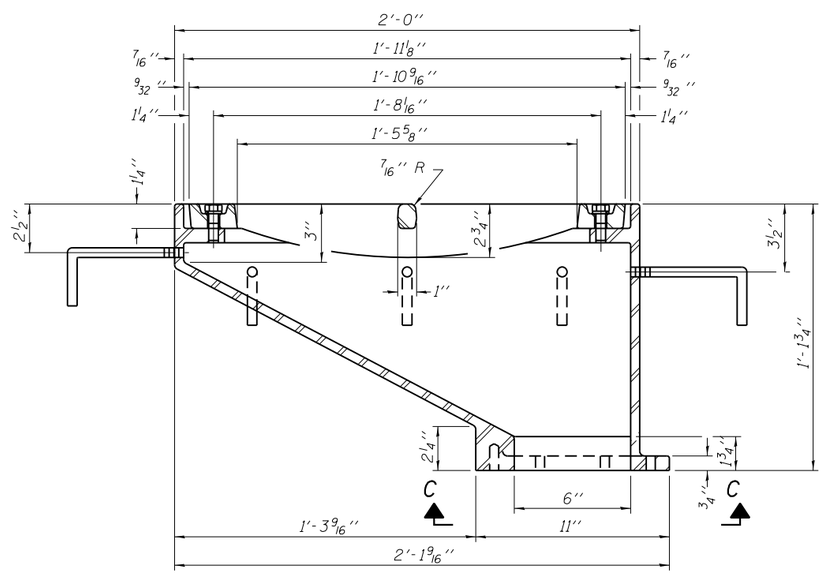

SECTION A-A

See sheet S15 & S16 of 50 for scupper location relative to parapet.

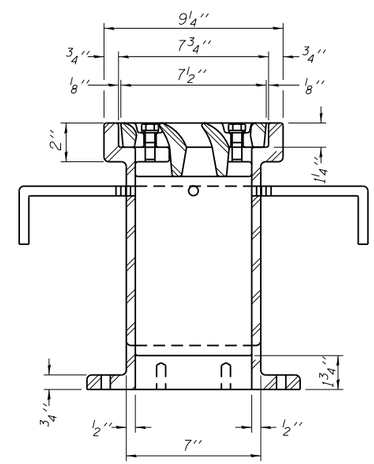

SECTION B-B

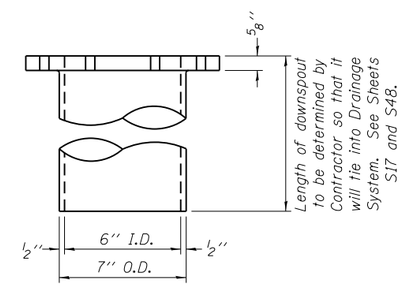

DOWNSPOUT

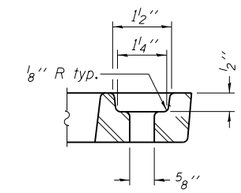

BOLT HOLE DETAIL

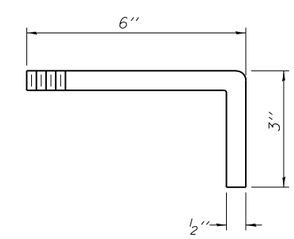

ANCHOR STUD DETAIL

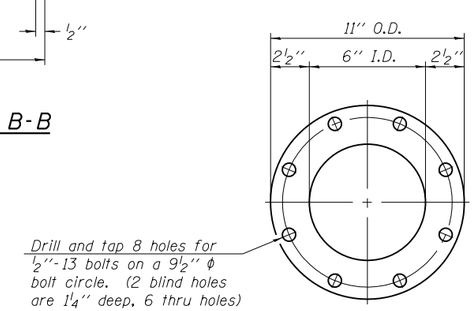

VIEW C-C

BILL OF MATERIAL

ITEM	UNIT	QUANTITY
Drainage Scuppers, DS-12	Each	4

DS-12 7-1-10

H:\Jobs2011\2013022\CAD\Structural\dgn\016-1149_Final\00\D160J15-s25-scupper.dgn
5/20/2013 11:24:08 AM

GRÄEF
8501 W. Higgins Road; Suite 280
Chicago, Illinois 60631; (773) 399-0112

USER NAME =	DESIGNED - J.Z.	REVISED -
	CHECKED - J.A.Z.	REVISED -
PLOT SCALE =	DRAWN - E.E.J.	REVISED -
PLOT DATE =	DATE - 5/17/2013	REVISED -

STATE OF ILLINOIS
DEPARTMENT OF TRANSPORTATION

DRAINAGE SCUPPER, DS-12
STRUCTURE NO. 016-1149

SHEET NO. S25 OF 50 SHEETS

F.A.I. RTE.	SECTION	COUNTY	TOTAL SHEETS	SHEET NO.
94	1920-B	COOK	137	84
		CONTRACT NO. 60J15		
		ILLINOIS FED. AID PROJECT		