08-01-2025 LETTING ITEM 089

F.A.I. RTE.	SECTION	COUNTY	TOTAL SHEETS	SHEET NO.
72	(74-68VB)B	PIATT	93	1
	ILLINOIS	CONTRACT NO. 70024		

STATE OF ILLINOIS
DEPARTMENT OF TRANSPORTATION

FOR INDEX OF SHEETS, SEE SHEET NO. 2
FOR SUMMARY OF QUANTITIES, SEE SHEET NO. 3 THROUGH 8

PROPOSED HIGHWAY PLANS

F.A.I. ROUTE 72 (I-72)
SECTION (74-68VB)B
PROJECT NO. BR-YU1P(807)
BRIDGE SUPERSTRUCTURE REPLACEMENT
PIATT COUNTY

CURRENT TRAFFIC DATA FOR F.A.I. 72
2020 ADT = 6,400 (EB), 6,100 (WB)
P.U. % 77.4 (EB), 75.8 (WB)
S.U. % 2.3 (EB), 2.9 (WB)
M.U. % 20.3 (EB), 21.3 (WB)

DESIGN DESIGNATION
N/A

C-95-050-18
OVER NORFOLK SOUTHERN RAILWAY COMPANY
NORTH OF MONTICELLO
NORFOLK SOUTHERN MILEPOST (C-144.08)
DIVISION (MIDWEST)

P-95-015-18

LOCATION OF SECTION INDICATED THUS: -

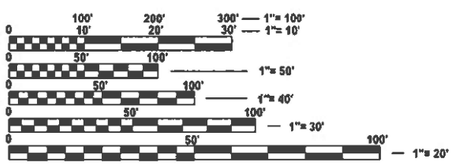

FULL SIZE PLANS HAVE BEEN PREPARED USING STANDARD ENGINEERING SCALES. REDUCED SIZED PLANS WILL NOT CONFORM TO STANDARD SCALES. IN MAKING MEASUREMENTS ON REDUCED PLANS, THE ABOVE SCALES MAY BE USED.

J.U.L.I.E.
JOINT UTILITY LOCATION INFORMATION FOR EXCAVATION
1-800-892-0123
OR 811

MONTICELLO TOWNSHIP

END SECTION
EB STA 1439+19.99

STA 1438+70.61
PR SUPERSTRUCTURE REPLACEMENT
SN 074-0069 EB OVER NSRR
226'-6" BK-BK ABUT.
SN 074-0070 WB OVER NSRR
226'-6" BK-BK ABUT.

BEGIN SECTION
EB STA 1436+93.49

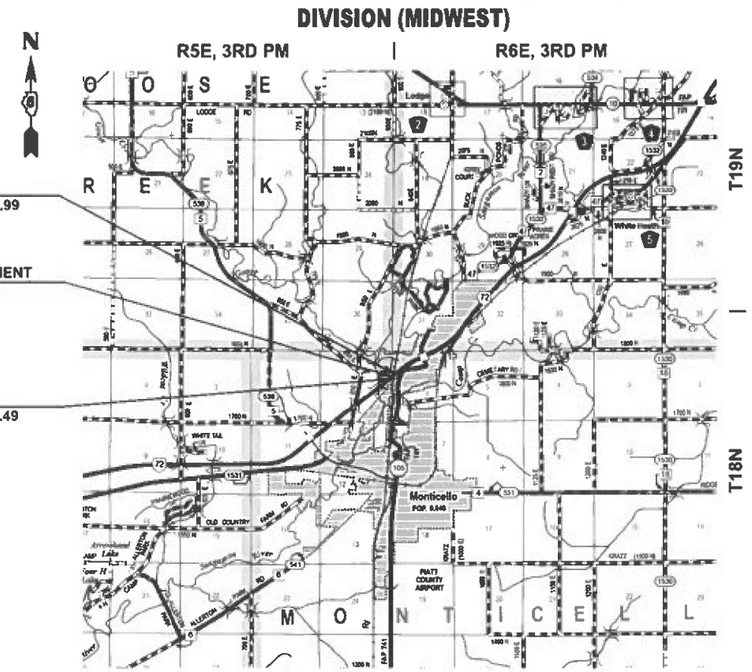

GROSS LENGTH = 226.50 FT = 0.043 MI
NET LENGTH = 226.50 FT = 0.043 MI

KIMBERLY S. CUMMINS
56816
REGISTERED PROFESSIONAL ENGINEER OF ILLINOIS

Kimberly S. Cummins 6/18/25
ILLINOIS PROFESSIONAL NO. 56816
(Expires 11/30/25)

PROJECT ENGINEER: RYAN T. CARROLL, P.E.
PHONE NUMBER: (217) 465-4181

CONTRACT NO. 70024

CEC Cummins Engineering Corporation
ENGINEERS & SURVEYORS

STATE OF ILLINOIS
DEPARTMENT OF TRANSPORTATION

SUBMITTED 6/26 2025
Kenneth A. Garrett
REGIONAL ENGINEER
June 27 2025
ENGINEER OF DESIGN AND ENVIRONMENT
June 27 2025
DIRECTOR OF HIGHWAYS PROJECT IMPLEMENTATION

PRINTED BY THE AUTHORITY OF THE STATE OF ILLINOIS

INDEX OF SHEETS

HIGHWAY STANDARDS

STANDARD NO.	DESCRIPTION
000001-08	STANDARD SYMBOLS, ABBREVIATIONS AND PATTERNS
001001-02	AREAS OF REINFORCEMENT BARS
001006	DECIMAL OF AN INCH AND OF A FOOT
280001-07	TEMPORARY EROSION CONTROL SYSTEMS
420401-13	PAVEMENT CONNECTOR (PCC) FOR BRIDGE APPROACH SLAB
601001-05	PIPE UNDERDRAINS
606001-08	CONCRETE CURB TYPE B AND COMBINATION CONCRETE CURB AND GUTTER
610001-09	SHOULDER INLET WITH CURB
630001-13	STEEL PLATE BEAM GUARDRAIL
630301-09	SHOULDER WIDENING FOR TYPE 1 (SPECIAL) GUARDRAIL TERMINALS
631031-18	TRAFFIC BARRIER TERMINAL, TYPE 6
642001-03	SHOULDER RUMBLE STRIPS, 16 IN.
667101-02	PERMANENT SURVEY MARKERS
701101-05	OFF-RD OPERATIONS, MULTILANE, 15' (4.5 M) TO 24" (600 MM) FROM PAVEMENT EDGE
701106-02	OFF-RD OPERATIONS, MULTILANE, MORE THAN 15' (4.5 M) AWAY
701400-12	APPROACH TO LANE CLOSURE, FREEWAY/EXPRESSWAY
701401-13	LANE CLOSURE, FREEWAY/EXPRESSWAY
701402-12	LANE CLOSURE, FREEWAY/EXPRESSWAY, WITH BARRIER
701406-13	LANE CLOSURE, FREEWAY/EXPRESSWAY, DAY OPERATIONS ONLY
701426-09	LANE CLOSURE, MULTILANE, INTERMITTENT OR MOVING OPER., FOR SPEEDS ≥ 45 MPH
701901-10	TRAFFIC CONTROL DEVICES
704001-08	TEMPORARY CONCRETE BARRIER
725001-01	OBJECT AND TERMINAL MARKERS
780001-05	TYPICAL PAVEMENT MARKINGS
781001-04	TYPICAL APPLICATIONS RAISED REFLECTIVE PAVEMENT MARKERS
782001-01	CURB REFLECTORS
782006-01	GUARDRAIL AND BARRIER WALL REFLECTOR MOUNTING DETAILS

GENERAL NOTES

G.N.-100B

MICROSTATION AND GEOPAK FILES OF THIS PROJECT WILL BE MADE AVAILABLE TO THE CONTRACTOR AFTER CONTRACT AWARD. IF THERE IS A CONFLICT BETWEEN THE ELECTRONIC FILES AND THE PRINTED CONTRACT PLANS AND DOCUMENTS, THE PRINTED CONTRACT PLANS AND DOCUMENTS SHALL TAKE PRECEDENCE OVER THE ELECTRONIC FILES. THE CONTRACTOR SHALL ACCEPT ALL RISK ASSOCIATED WITH USING THE ELECTRONIC FILES AND SHALL HOLD THE DEPARTMENT HARMLESS FOR ANY ERRORS OR OMISSIONS IN THE ELECTRONIC FILES AND THE DATA CONTAINED THEREIN. ERRORS OR DELAYS RESULTING FROM THE USE OF THE ELECTRONIC FILES BY THE CONTRACTOR SHALL NOT RESULT IN AN EXTENSION OF TIME FOR ANY INTERIM OR FINAL COMPLETION DATE OR SHALL NOT BE CONSIDERED CAUSE FOR ADDITIONAL COMPENSATION. THE CONTRACTOR SHALL NOT USE, SHARE, OR DISTRIBUTE THESE ELECTRONIC FILES EXCEPT FOR THE PURPOSE OF CONSTRUCTING THIS CONTRACT. ANY CLAIMS BY THIRD PARTIES DUE TO USE OR ERRORS SHALL BE THE SOLE RESPONSIBILITY OF THE CONTRACTOR. THE CONTRACTOR SHALL INCLUDE THIS DISCLAIMER WITH THE TRANSFER OF THESE ELECTRONIC FILES TO ANY OTHER PARTIES AND SHALL INCLUDE APPROPRIATE LANGUAGE BINDING THEM TO SIMILAR RESPONSIBILITIES.

G.N. 105.09A

ALL ELEVATIONS SHOWN IN THE PLANS ARE BASED ON NORTH AMERICAN VERTICAL DATUM OF 1988. (NAVD 88)

G.N. 107.12

THE NAME, ADDRESS AND TELEPHONE NUMBER OF THE LOCAL RAILROAD CONTACT IS:

MR. JAKE WATSON
SENIOR ENGINEER PUBLIC IMPROVEMENTS
NORFOLK SOUTHERN CORPORATION
650 W. PEACHTREE STREET, NW, BOX 45
ATLANTA, GA 30309
(470) 463-6778 (O)
JACOB.WATSON@NSCORP.COM

G.N. 406H

MIXTURE REQUIREMENTS

THE FOLLOWING MIXTURE REQUIREMENTS ARE APPLICABLE FOR THIS PROJECT:

LOCATION	I-72	I-72	I-72	I-72
MIXTURE USE	BRIDGE DECK WEARING SURFACE (PRE-STAGE C & PRE-STAGE D 1-1/2")	MAINLINE & SHOULDER SURFACE (PRE-STAGE A, PRE-STAGE B, STAGE 1, & STAGE 2 1-1/2")	MAINLINE & SHOULDER BINDER (PRE-STAGE A, PRE-STAGE B, STAGE 1, & STAGE 2 TOP LIFT)	MAINLINE & SHOULDER BINDER (PRE-STAGE A, PRE-STAGE B, STAGE 1, & STAGE 2 BOTTOM LIFTS)
AC/PG	SBS PG 64-22	SBS PG 70-22	SBS PG 70-22	PG 64-22
DESIGN AIR VOIDS	4.0% @ NDES=70	4.0% @ NDES=90	4.0% @ NDES=90	4.0% @ NDES=90
MIX COMP (GRADATION)	IL 9.5	IL 9.5	IL 19.0	IL 19.0
FRICTION AGGREGATE	MIX D	MIX E	N.A.	N.A.
MIXTURE WEIGHT	112	112	112	112
QUALITY MANAGEMENT PROGRAM	QC/QA	QC/QA	QC/QA	QC/QA
SUBLOT SIZE	3000	3000	3000	3000
MATERIAL TRANSFER DEVICE (REQUIRED?)	NO	NO	NO	NO

G.N. 703A

SHORT TERM PAVEMENT MARKING SHALL BE APPLIED TO THE PAVEMENT AFTER ANY OF THE FOLLOWING: COLD MILLING AND/OR PLACING BITUMINOUS MATERIALS (TACK COAT), LEVELING BINDER (MACHINE METHOD), BINDER AND SURFACE COURSES. SHORT TERM PAVEMENT MARKING PLACED ON THE SURFACE SHALL COINCIDE WITH THE FINAL PAVEMENT STRIPING. SHORT TERM PAVEMENT MARKING PLACED PRIOR TO THE SURFACE SHALL COINCIDE WITH THE EXISTING PAVEMENT MARKINGS. USE 4 FEET PER 40 FEET (OR 10% PER STATION).

G.N. 781

THE FINAL PAVEMENT MARKINGS SHALL BE IN PLACE PRIOR TO PLACING THE RAISED REFLECTIVE PAVEMENT MARKERS.

ALL WORK TO BE PERFORMED ON, OVER, UNDER, OR ADJACENT TO THE RAILROAD RIGHT-OF-WAY SHALL COMPLY WITH THE NORFOLK SOUTHERN RAILWAY COMPANY ("RAILROAD", "NSR" OR "NS") PUBLIC PROJECTS MANUAL (APPENDIX E, SPECIAL PROVISIONS FOR THE PROTECTION OF RAILWAY INTERESTS, AND APPENDIX H1, OVERHEAD GRADE SEPARATION DESIGN CRITERIA). WHEN IN CONFLICT WITH OTHER PROJECT SPECIFICATIONS, THE MOST STRINGENT ONE SHALL APPLY.

"ONE CALL" SERVICES DO NOT LOCATE BURIED RAILROAD SIGNAL AND COMMUNICATION LINES. THE CONTRACTOR SHALL CONTACT THE RAILROAD'S REPRESENTATIVE 2 DAYS IN ADVANCE OF WORK AT THOSE PLACES WHERE EXCAVATION, PILE DRIVING, OR HEAVY LOADS MAY DAMAGE THE RAILROAD'S UNDERGROUND FACILITIES. UPON REQUEST FROM THE CONTRACTOR OR SPONSOR, RAILROAD FORCES WILL LOCATE AND PAINT MARK OR FLAG THE RAILROAD'S UNDERGROUND FACILITIES. THE CONTRACTOR SHALL AVOID EXCAVATION OR OTHER DISTURBANCE OF THESE FACILITIES. IF DISTURBANCE OR EXCAVATION IS REQUIRED NEAR A BURIED RAILROAD FACILITY, THE CONTRACTOR SHALL COORDINATE WITH THE RAILROAD TO HAVE THE FACILITY POTHOLED MANUALLY WITH CAREFUL HAND EXCAVATION. THE FACILITY SHALL BE PROTECTED BY THE CONTRACTOR DURING THE COURSE OF THE DISTURBANCE UNDER THE SUPERVISION AND DIRECTION OF THE RAILROADS REPRESENTATIVES.

THE RAILROAD WILL BE PROVIDED AS-BUILT DRAWINGS SHOWING THE ACTUAL CLEARANCES AS CONSTRUCTED. DEPTH, SIZE, AND LOCATION OF ALL FOUNDATION COMPONENTS SHALL BE SHOWN ON THE DRAWINGS.

TO PROTECT BALLAST FROM CONTAMINATION, THE RAILROAD ENGINEER OR HIS REPRESENTATIVE MAY REQUIRE CONTRACTOR TO INSTALL BALLAST PROTECTION CONSISTING OF FILTER FABRIC AND/OR PLYWOOD UNDER THE AREA OF WORK.

COMMITMENTS

NONE

SUMMARY OF QUANTITIES

LOCATION OF WORK: FAI 72 URBAN INTERSTATE SN 074-0069 (EB) & SN 074-0070 (WB) PIATT COUNTY

FUNDING BREAKOUT: 90% FEDERAL 10% STATE

CONSTRUCTION TYPE CODE: 0013

CODE NO.	ITEM	UNIT	TOTAL QUANTITY
25000200	SEEDING, CLASS 2	ACRE	0.50
25000400	NITROGEN FERTILIZER NUTRIENT	POUND	45
25000500	PHOSPHORUS FERTILIZER NUTRIENT	POUND	45
25000600	POTASSIUM FERTILIZER NUTRIENT	POUND	45
25100115	MULCH, METHOD 2	ACRE	0.50
28000250	TEMPORARY EROSION CONTROL SEEDING	POUND	50
31200100	STABILIZED SUBBASE 4"	SQ YD	756
40600370	LONGITUDINAL JOINT SEALANT	FOOT	1,982
40600290	BITUMINOUS MATERIALS (TACK COAT)	POUND	3,332
40600982	HOT-MIX ASPHALT SURFACE REMOVAL - BUTT JOINT	SQ YD	533
40603090	HOT-MIX ASPHALT BINDER COURSE, IL-19.0, N90	TON	152
40604062	HOT-MIX ASPHALT SURFACE COURSE, IL-9.5, MIX "D", N70	TON	105
40604074	HOT-MIX ASPHALT SURFACE COURSE, IL-9.5, MIX "E", N90	TON	127
42000080	PAVEMENT CONNECTOR (PCC) FOR BRIDGE APPROACH SLAB	SQ YD	838

SUMMARY OF QUANTITIES

LOCATION OF WORK: FAI 72 URBAN INTERSTATE SN 074-0069 (EB) & SN 074-0070 (WB) PIATT COUNTY

FUNDING BREAKOUT: 90% FEDERAL 10% STATE

CONSTRUCTION TYPE CODE: 0013

CODE NO.	ITEM	UNIT	TOTAL QUANTITY
42001300	PROTECTIVE COAT	SQ YD	838
44000100	PAVEMENT REMOVAL	SQ YD	243
44000155	HOT-MIX ASPHALT SURFACE REMOVAL, 1 1/2"	SQ YD	1,667
44000300	CURB REMOVAL	FOOT	1,022
44004250	PAVED SHOULDER REMOVAL	SQ YD	4,042
48101200	AGGREGATE SHOULDERS, TYPE B	TON	86
48203100	HOT-MIX ASPHALT SHOULDERS	TON	2,277
50101700	REMOVAL OF EXISTING SUPERSTRUCTURES NO. 1	EACH	1
50101800	REMOVAL OF EXISTING SUPERSTRUCTURES NO. 2	EACH	1
50102400	CONCRETE REMOVAL	CU YD	109.6
50104650	SLOPE WALL REMOVAL	SQ YD	261
50157300	PROTECTIVE SHIELD	SQ YD	794
50200100	STRUCTURE EXCAVATION	CU YD	623
50300100	FLOOR DRAINS	EACH	18

SUMMARY OF QUANTITIES

LOCATION OF WORK: FAI 72 URBAN INTERSTATE SN 074-0069 (EB) & SN 074-0070 (WB) PIATT COUNTY

FUNDING BREAKOUT: 90% FEDERAL 10% STATE

CONSTRUCTION TYPE CODE: 0013

CODE NO.	ITEM	UNIT	TOTAL QUANTITY
50300225	CONCRETE STRUCTURES	CU YD	100.9
50300255	CONCRETE SUPERSTRUCTURE	CU YD	758.4
50300300	PROTECTIVE COAT	SQ YD	2,992
50301350	CONCRETE SUPERSTRUCTURE (APPROACH SLAB)	CU YD	238.0
50500105	FURNISHING AND ERECTING STRUCTURAL STEEL	L SUM	1
50500405	FURNISHING AND ERECTING STRUCTURAL STEEL	POUND	4,204
50500505	STUD SHEAR CONNECTORS	EACH	13,140
50800205	REINFORCEMENT BARS, EPOXY COATED	POUND	281,040
50800515	BAR SPLICERS	EACH	2,216
51100100	SLOPE WALL 4 INCH	SQ YD	261
51500100	NAME PLATES	EACH	2
52000110	PREFORMED JOINT STRIP SEAL	FOOT	112
52100010	ELASTOMERIC BEARING ASSEMBLY, TYPE I	EACH	36
52100520	ANCHOR BOLTS, 1"	EACH	48

SUMMARY OF QUANTITIES

LOCATION OF WORK: FAI 72 URBAN INTERSTATE SN 074-0069 (EB) & SN 074-0070 (WB) PIATT COUNTY

FUNDING BREAKOUT: 90% FEDERAL 10% STATE

CONSTRUCTION TYPE CODE: 0013

	CODE NO.	ITEM	UNIT	TOTAL QUANTITY
	52100530	ANCHOR BOLTS, 1 1/4"	EACH	48
	52200010	TEMPORARY SHEET PILING	SQ FT	1,545
	54213447	END SECTIONS 12"	EACH	4
	58600101	GRANULAR BACKFILL FOR STRUCTURES	CU YD	623
	58700300	CONCRETE SEALER	SQ FT	1,806
	59100100	GEOCOMPOSITE WALL DRAIN	SQ YD	228
	60100945	PIPE DRAINS 12"	FOOT	140
	60108501	PIPE UNDERDRAINS, TYPE 3	FOOT	3,880
	60146304	PIPE UNDERDRAINS FOR STRUCTURES 4"	FOOT	340
	60600605	CONCRETE CURB, TYPE B	FOOT	989
	61000115	TYPE E INLET BOX, STANDARD 610001	EACH	7
*	63000001	STEEL PLATE BEAM GUARDRAIL, TYPE A, 6 FOOT POSTS	FOOT	1,237.5
*	63100085	TRAFFIC BARRIER TERMINAL, TYPE 6	EACH	5
*	63100167	TRAFFIC BARRIER TERMINAL, TYPE 1 (SPECIAL) TANGENT	EACH	3

*= SPECIALTY ITEM

SUMMARY OF QUANTITIES

LOCATION OF WORK: FAI 72 URBAN INTERSTATE SN 074-0069 (EB) & SN 074-0070 (WB) PIATT COUNTY

FUNDING BREAKOUT: 90% FEDERAL 10% STATE

CONSTRUCTION TYPE CODE: 0013

CODE NO.	ITEM	UNIT	TOTAL QUANTITY
63200310	GUARDRAIL REMOVAL	FOOT	1,363
63300575	REMOVE AND REERECT RAIL ELEMENT OF EXISTING GUARDRAIL	FOOT	2,206
64200116	SHOULDER RUMBLE STRIPS, 16 INCH	FOOT	3,346
67000500	ENGINEER'S FIELD OFFICE, TYPE B	CAL MO	15
67100100	MOBILIZATION	L SUM	1
70100205	TRAFFIC CONTROL AND PROTECTION, STANDARD 701401	EACH	8
70100207	TRAFFIC CONTROL AND PROTECTION, STANDARD 701402	EACH	8
70100700	TRAFFIC CONTROL AND PROTECTION, STANDARD 701406	L SUM	1
70103815	TRAFFIC CONTROL SURVEILLANCE	CAL DA	35
70107005	PAVEMENT MARKING BLACKOUT TAPE, 5"	FOOT	13,899
70300100	SHORT TERM PAVEMENT MARKING	FOOT	184
70300150	SHORT TERM PAVEMENT MARKING REMOVAL	SQ FT	7,465
70307120	TEMPORARY PAVEMENT MARKING - LINE 4" - TYPE IV TAPE	FOOT	13,519
70400100	TEMPORARY CONCRETE BARRIER	FOOT	1,775.0
70400125	PINNING TEMPORARY CONCRETE BARRIER	EACH	198

SUMMARY OF QUANTITIES

LOCATION OF WORK: FAI 72 URBAN INTERSTATE SN 074-0069 (EB) & SN 074-0070 (WB) PIATT COUNTY

FUNDING BREAKOUT: 90% FEDERAL 10% STATE

CONSTRUCTION TYPE CODE: 0013

	CODE NO.	ITEM	UNIT	TOTAL QUANTITY
	70400200	RELOCATE TEMPORARY CONCRETE BARRIER	FOOT	3,600.0
	70600250	IMPACT ATTENUATORS, TEMPORARY (NON- REDIRECTIVE), TEST LEVEL 3	EACH	2
	70600350	IMPACT ATTENUATORS, RELOCATE (NON- REDIRECTIVE), TEST LEVEL 3	EACH	6
*	72501000	TERMINAL MARKER - DIRECT APPLIED	EACH	3
*	78008310	POLYUREA PAVEMENT MARKING TYPE II - LINE 4"	FOOT	2,813
*	78011025	GROOVING FOR RECESSED PAVEMENT MARKING 5"	FOOT	2,813
*	78100100	RAISED REFLECTIVE PAVEMENT MARKER	EACH	12
*	78200005	GUARDRAIL REFLECTORS, TYPE A	EACH	24
	78300200	RAISED REFLECTIVE PAVEMENT MARKER REMOVAL	EACH	12
	X5030250	BRIDGE DECK GROOVING (LONGITUDINAL)	SQ YD	1,528
	X5051204	STRUCTURAL STEEL REMOVAL	POUND	4,204
	X5051206	STRUCTURAL STEEL REPAIR	POUND	1,552
	X5080530	BAR TERMINATORS	EACH	484
	X6013700	PIPE UNDERDRAIN REMOVAL (SPECIAL)	FOOT	3,880

*= SPECIALTY ITEM

SUMMARY OF QUANTITIES

LOCATION OF WORK: FAI 72 URBAN INTERSTATE SN 074-0069 (EB) & SN 074-0070 (WB) PIATT COUNTY

FUNDING BREAKOUT: 90% FEDERAL 10% STATE

CONSTRUCTION TYPE CODE: 0013

	CODE NO.	ITEM	UNIT	TOTAL QUANTITY
	X6050065	REMOVING INLETS (SPECIAL)	EACH	7
	X6640108	FENCE REMOVAL AND REINSTALLATION	FOOT	200
	X7200201	WIDTH RESTRICTION SIGNING	L SUM	1
	Z0004552	APPROACH SLAB REMOVAL	SQ YD	580
	Z0004556	HOT-MIX ASPHALT SURFACE REMOVAL (DECK)	SQ YD	948
	Z0012754	STRUCTURAL REPAIR OF CONCRETE (DEPTH EQUAL TO OR LESS THAN 5 INCHES)	SQ FT	247
	Z0012755	STRUCTURAL REPAIR OF CONCRETE (DEPTH GREATER THAN 5 INCHES)	SQ FT	38
	Z0013798	CONSTRUCTION LAYOUT	L SUM	1
	Z0016002	DECK SLAB REPAIR (FULL DEPTH, TYPE II)	SQ YD	225
	Z0016200	DECK SLAB REPAIR (PARTIAL)	SQ YD	74
	Z0029090	DIAMOND GRINDING (BRIDGE SECTION)	SQ YD	2,268
*	Z0038700	PERMANENT BENCH MARKS	EACH	2
	Z0048665	RAILROAD PROTECTIVE LIABILITY INSURANCE	L SUM	1
Ø	Z0076600	TRAINEES	HOUR	3,000
*	Z0054404	ROCK FILL - EMBANKMENT	CU YD	174
Ø	Z0076604	TRAINEES - TRAINING PROGRAM GRADUATE	HOUR	3,000

Ø 0042 *= SPECIALTY ITEM

MODEL: Summary of Quantities [Sheet]
FILE NAME: H:\Support\IDOT CONNECT\Con curvation\WorkSpaces\IDOTCAD CONNECT\WorkSets\2564.4 Piatt Bridge Replacement\CADD Data\CAD Sheets\D570024-sht-SOQ.dgn

CEC Cummins Engineering Corporation
ENGINEERS & SURVEYORS

JOB = 2564.4	DESIGNED - CDS	REVISED -	STATE OF ILLINOIS DEPARTMENT OF TRANSPORTATION
FILE NAME = D570024-sht-SOQ.dgn	DRAWN - CDS	REVISED -	
PLOT SCALE = $SCALE$	CHECKED - CGF	REVISED -	
PLOT DATE = 3/12/2025	DATE - 1/09/2025	REVISED -	

SUMMARY OF QUANTITIES

SCALE: SHEET OF SHEETS STA. TO STA.

F.A.I. RTE.	SECTION	COUNTY	TOTAL SHEETS	SHEET NO.
72	(74-68VB)B	PIATT	93	9

CONTRACT NO. 70024

ILLINOIS FED. AID PROJECT

REV. 5/7/25 REV. 4/23/25

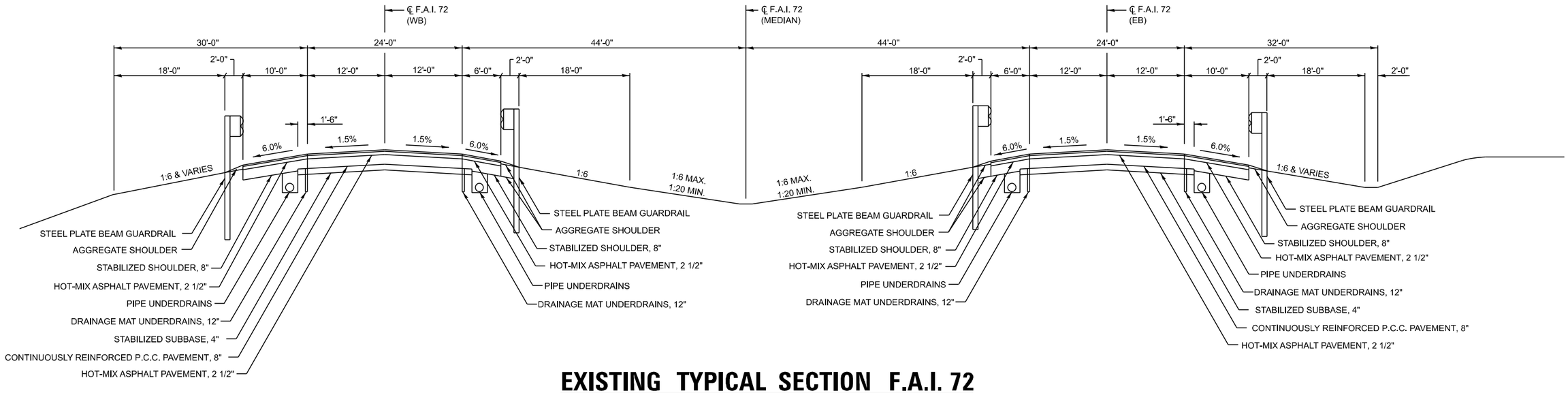

EXISTING TYPICAL SECTION F.A.I. 72

EB STA 1439+19.99 TO STA 1442+35.00
WB STA 1440+47.73 TO STA 1443+15.00

OMISSIONS (STATIONED ALONG MEDIAN CENTERLINE)
SN 074-0069
EB STA 1436+93.49 TO STA 1439+19.99
SN 074-0070
WB STA 1438+21.23 TO STA 1440+47.73

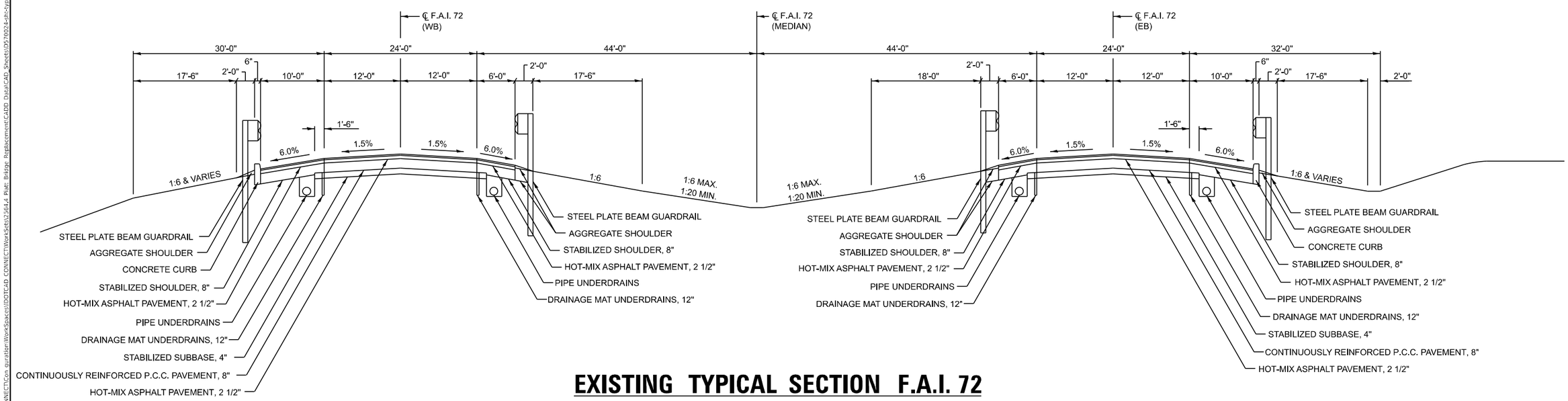

EXISTING TYPICAL SECTION F.A.I. 72

EB STA 1433+65.00 TO STA 1436+93.49
WB STA 1435+35.00 TO STA 1438+21.23

MODEL: Typical [Sheet]
FILE NAME: H:\Support\IDOT_CONNECT\Con guration\WorkSpaces\IDOTC4D CONNECT\WorkSets\2564.4 Piatt Bridge Replacement\CADD Data\CAD Sheets\D570024-sht-typical.dgn

CEC Cummins Engineering Corporation ENGINEERS & SURVEYORS	JOB = 2564.4	DESIGNED - CDS	REVISED -	STATE OF ILLINOIS DEPARTMENT OF TRANSPORTATION	TYPICAL SECTIONS			F.A.I. RTE.	SECTION	COUNTY	TOTAL SHEETS / SHEET NO.
	FILE NAME = D570024-sht-typical.dgn	DRAWN - CDS	REVISED -					72	(74-68VB)B	PIATT	93 / 10
	PLOT SCALE = $SCALES	CHECKED - CGF	REVISED -							CONTRACT NO. 70024	
	PLOT DATE = 3/12/2025	DATE - 2/11/2025	REVISED -		SCALE:	SHEET OF SHEETS	STA. TO STA.		ILLINOIS	FED. AID PROJECT	

1. SHOULDER RUMBLE STRIPS, 16 INCH
2. POLYUREA PAVEMENT MARKING TYPE II - LINE 4"
   GROOVING FOR RECESSED PAVEMENT MARKING 5"
3. LONGITUDINAL JOINT SEALANT
   (PLACE AT SHOULDER - FULL WIDTH DURING STAGE 1 AND STAGE 2)
   (PLACE AT CENTERLINE - HALF WIDTH DURING STAGE 1 AND STAGE 2)

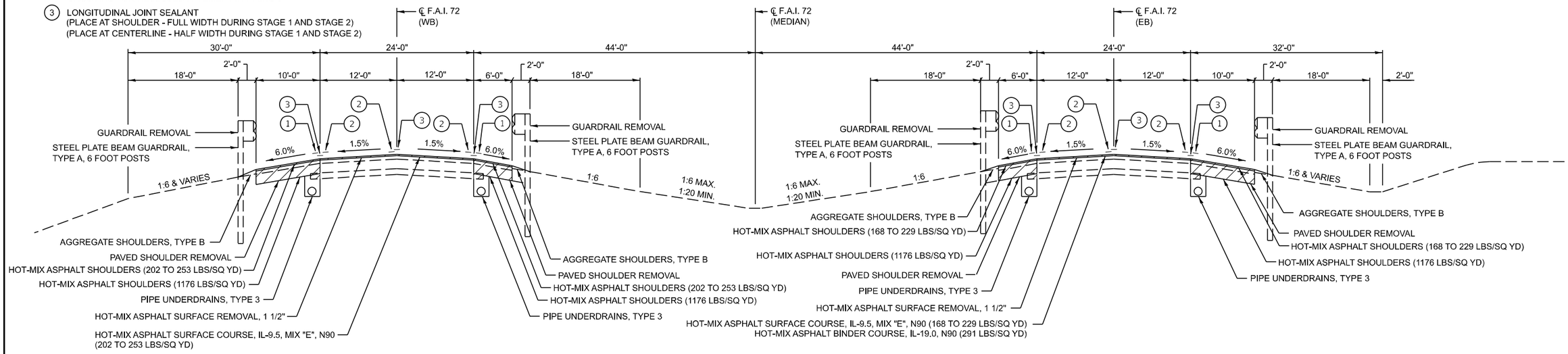

PROPOSED TYPICAL SECTION F.A.I. 72

EB STA 1439+19.99 TO STA 1441+35.00
WB STA 1440+47.73 TO STA 1442+15.00

NOTE:
1. ALL STATIONING IS MEASURED ALONG THE MEDIAN CENTERLINE
2. EXISTING MAT UNDERDRAINS AND PIPE UNDERDRAINS SHALL BE REMOVED. THIS WORK WILL BE PAID FOR WITH PIPE UNDERDRAIN REMOVAL (SPECIAL)

OMISSIONS (STATIONED ALONG MEDIAN CENTERLINE)

PAVEMENT CONNECTOR (PCC) FOR APPROACH SLAB
EB STA 1436+15.47 TO STA 1436+65.01
EB STA 1439+48.47 TO STA 1439+92.97
WB STA 1437+47.77 TO STA 1437+92.75
WB STA 1440+76.21 TO STA 1441+24.91

BRIDGE APPROACH PAVEMENT
EB STA 1436+65.01 TO STA 1436+95.01
EB STA 1439+18.48 TO STA 1439+48.48
WB STA 1437+92.75 TO STA 1438+22.75
WB STA 1440+46.21 TO STA 1440+76.21

SN 074-0069
EB STA 1436+93.49 TO STA 1439+19.99
SN 074-0070
WB STA 1438+21.23 TO STA 1440+47.73

1. SHOULDER RUMBLE STRIPS, 16 INCH
2. POLYUREA PAVEMENT MARKING TYPE II - LINE 4"
   GROOVING FOR RECESSED PAVEMENT MARKING 5"
3. LONGITUDINAL JOINT SEALANT

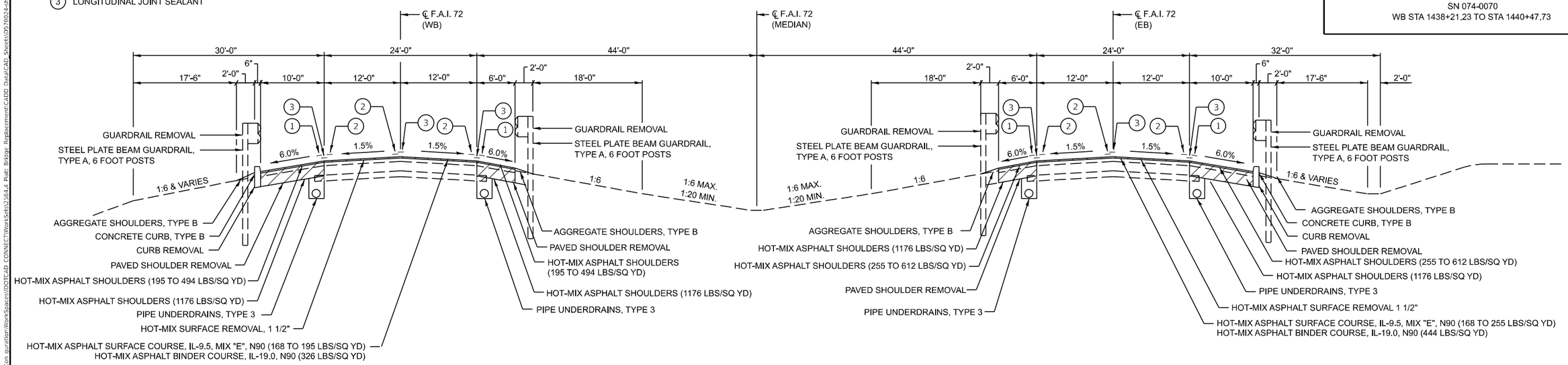

PROPOSED TYPICAL SECTION F.A.I. 72

EB STA 1434+65.00 TO STA 1436+93.49
WB STA 1436+35.00 TO STA 1438+21.23

NOTE:
1. ALL STATIONING IS MEASURED ALONG THE MEDIAN CENTERLINE
2. EXISTING MAT UNDERDRAINS AND PIPE UNDERDRAINS SHALL BE REMOVED. THIS WORK WILL BE PAID FOR WITH PIPE UNDERDRAIN REMOVAL (SPECIAL)

MODEL: Typical 2 [Sheet]
FILE NAME: H:\Support\IDOT_CONNECT\Con guration\WorkSpaces\IDOTC4D CONNECT\WorkSets\2564.4 Piatt Bridge Replacement\CADD Data\CAD Sheets\D570024-sht-typical.dgn

CEC Cummins Engineering Corporation — ENGINEERS & SURVEYORS	JOB = 2564.4	DESIGNED - CDS	REVISED -	STATE OF ILLINOIS DEPARTMENT OF TRANSPORTATION	TYPICAL SECTIONS
	FILE NAME = D570024-sht-typical.dgn	DRAWN - CDS	REVISED -		
	PLOT SCALE = $SCALES	CHECKED - CGF	REVISED -		SCALE: SHEET OF SHEETS STA. TO STA.
	PLOT DATE = 3/12/2025	DATE - 2/11/2025	REVISED -		

F.A.I. RTE.	SECTION	COUNTY	TOTAL SHEETS	SHEET NO.
72	(74-68VB)B	PIATT	93	11
		CONTRACT NO. 70024		
	ILLINOIS	FED. AID PROJECT		

(1) SHOULDER RUMBLE STRIPS, 16 INCH

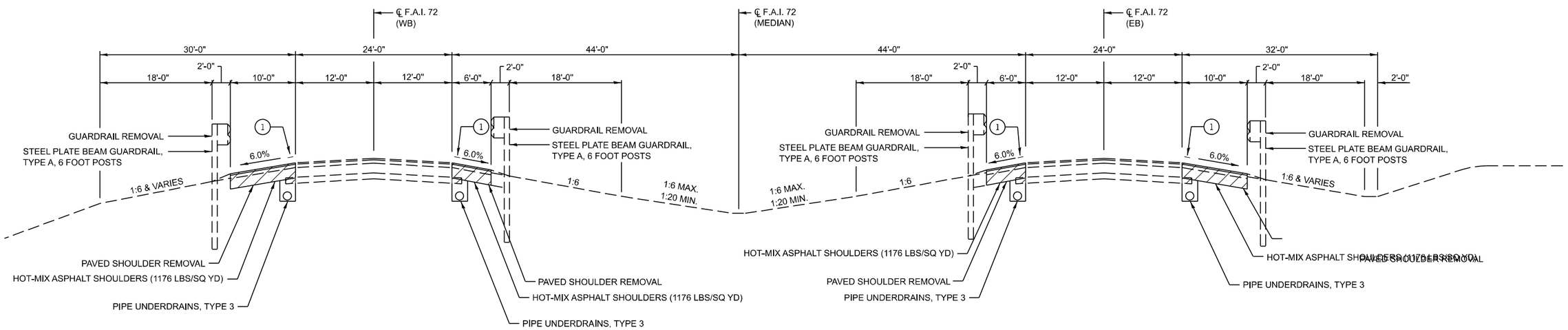

PROPOSED TYPICAL SECTION F.A.I. 72

EB LT STA 1431+25.00 TO STA 1434+65.00
EB LT STA 1441+35.00 TO STA 1443+40.00
EB RT STA 1430+42.00 TO STA 1434+65.00
EB RT STA 1441+35.00 TO STA 1443+40.00
WB LT STA 1434+27.50 TO STA 1436+35.00
WB LT STA 1442+15.00 TO STA 1446+52.00
WB RT STA 1434+27.50 TO STA 1436+35.00
WB RT STA 1442+15.00 TO STA 1445+45.00

NOTE:
1. ALL STATIONING IS MEASURED ALONG THE MEDIAN CENTERLINE
2. EXISTING MAT UNDERDRAINS AND PIPE UNDERDRAINS SHALL BE REMOVED. THIS WORK WILL BE PAID FOR WITH PIPE UNDERDRAIN REMOVAL (SPECIAL)

MODEL: Typical 3 (Sheet)
FILE NAME: H:\Support\IDOT_CONNECT\Con guration\WorkSpaces\IDOT-CAD CONNECT\WorkSets\2564.4 Plat Bridge Replacement\CADD Data\CAD Sheet\D570024-sht-typical.dgn

CEC Cummins Engineering Corporation — ENGINEERS & SURVEYORS	JOB = 2564.4	DESIGNED - CDS	REVISED -	STATE OF ILLINOIS DEPARTMENT OF TRANSPORTATION	TYPICAL SECTIONS
	FILE NAME = D570024-sht-typical.dgn	DRAWN - CDS	REVISED -		
	PLOT SCALE = 5SCALES	CHECKED - CGF	REVISED -		SCALE: SHEET OF SHEETS STA. TO STA.
	PLOT DATE = 3/12/2025	DATE - 2/21/2025	REVISED -		

F.A. RTE.	SECTION	COUNTY	TOTAL SHEETS	SHEET NO.
72	(74-68VB)B	PIATT	93	12
		CONTRACT NO. 70024		
	ILLINOIS	FED. AID PROJECT		

LOCATION	25000200	25000400	25000500	25000600	25100115
	SEEDING, CLASS 2	NITROGEN FERTILIZER NUTRIENT	PHOSPHORUS FERTILIZER NUTRIENT	POTASSIUM FERTILIZER NUTRIENT	MULCH, METHOD 2
	ACRE	POUND	POUND	POUND	ACRE
JOBSITE	0.50	45	45	45	0.50
TOTAL	0.50	45	45	45	0.50

LOCATION	28000250
	TEMPORARY EROSION CONTROL SEEDING
	POUND
JOBSITE	50
TOTAL	50

MAINLINE PAVING SCHEDULE

LOCATION		40600290	40600370	40603090		40604074	
		BITUMINOUS MATERIALS (TACK COAT)	LONGITUDINAL JOINT SEALANT	HOT-MIX ASPHALT BINDER COURSE, IL-19.0, N90		HOT-MIX ASPHALT SURFACE COURSE, IL-9.5, MIX "E", N90	
		POUND	FOOT	AVG DEPTH (INCH)	TON	DEPTH (INCH)	TON
I-74 (EB)							
STAGE 1							
STA. 1434+65.00	TO STA. 1434+95.00	24.1	30.0			2.28	6.8
STA. 1434+95.00	TO STA. 1436+15.47	145.3	120.5	3.96	47.7	1.50	18.1
STA. 1439+92.97	TO STA. 1441+05.00	134.5	112.0	2.60	29.0	1.50	16.7
STA. 1441+05.00	TO STA. 1441+35.00	24.0	30.0			2.04	6.1
STAGE 2							
STA. 1434+65.00	TO STA. 1434+95.00	12.2	30.0			2.28	3.5
STA. 1434+95.00	TO STA. 1436+15.47	73.4	120.5	3.96	24.1	1.50	9.1
STA. 1439+92.97	TO STA. 1441+05.00	68.3	112.0	2.60	14.7	1.50	8.5
STA. 1441+05.00	TO STA. 1441+35.00	12.2	30.0			2.04	3.1
I-74 (WB)							
STAGE 1							
STA. 1436+35.00	TO STA. 1436+65.00	24.0	30.0			1.74	5.2
STA. 1436+65.00	TO STA. 1437+47.77	99.3	82.8	2.91	24.0	1.50	12.4
STA. 1441+24.91	TO STA. 1441+85.00	48.1	60.1			2.26	13.5
STA. 1441+85.00	TO STA. 1442+15.00	24.0	30.0			1.80	5.4
STAGE 2							
STA. 1436+35.00	TO STA. 1436+65.00	12.2	30.0			1.74	2.6
STA. 1436+65.00	TO STA. 1437+47.77	50.4	82.8	2.91	12.2	1.50	6.3
STA. 1441+24.91	TO STA. 1441+85.00	24.4	60.1			2.26	6.9
STA. 1441+85.00	TO STA. 1442+15.00	12.2	30.0			1.80	2.7
TOTAL		788.6	990.7		151.7		126.9
USE		789*	991*		152		127

* SEE SHOULDER PAVING SCHEDULE FOR ADDITIONAL QUANTITY

SHOULDER PAVING SCHEDULE

LOCATION		40600290	40600370	48203100		
		BITUMINOUS MATERIALS (TACK COAT)	LONGITUDINAL JOINT SEALANT	HOT-MIX ASPHALT SHOULDERS		
		POUND	FOOT	HMA BINDER COURSE AVG DEPTH (INCH)	HMA SURFACE COURSE AVG DEPTH (INCH)	TON
I-74 (EB)						
PRE-STAGE A						
RT STA. 1430+42.00	TO STA. 1436+74.65	316.3		9	1.50	413.3
RT STA. 1438+99.41	TO STA. 1443+40.00	220.3		9	1.50	287.9
PRE-STAGE B						
LT STA. 1431+25.00	TO STA. 1437+11.14	175.8		9	1.50	229.8
LT STA. 1439+36.16	TO STA. 1443+40.00	121.2		9	1.50	158.3
STAGE 1						
LT STA. 1434+65.00	TO STA. 1434+95.00	9.0	30.0		2.28	2.6
LT STA. 1434+95.00	TO STA. 1436+15.47	54.2	120.5	3.96	1.50	24.6
LT STA. 1439+92.97	TO STA. 1441+05.00	50.4	112.0	2.60	1.50	17.1
LT STA. 1441+05.00	TO STA. 1441+35.00	9.0	30.0		2.04	2.3
STAGE 2						
RT STA. 1434+65.00	TO STA. 1434+95.00	15.0	30.0		2.28	4.3
RT STA. 1434+95.00	TO STA. 1436+15.47	90.4	120.5	3.96	1.50	40.9
RT STA. 1439+92.97	TO STA. 1441+05.00	84.0	112.0	2.60	1.50	28.6
RT STA. 1441+05.00	TO STA. 1441+35.00	15.0	30.0		2.04	3.8
I-74 (WB)						
PRE-STAGE A						
LT STA. 1434+27.50	TO STA. 1438+41.42	207.0		9	1.50	270.4
LT STA. 1440+65.98	TO STA. 1446+52.00	293.0		9	1.50	382.9
PRE-STAGE B						
RT STA. 1434+27.50	TO STA. 1438+04.79	113.2		9	1.50	147.9
RT STA. 1440+29.44	TO STA. 1445+45.00	154.7		9	1.50	202.1
STAGE 1						
RT STA. 1436+35.00	TO STA. 1436+65.00	9.0	30.0		1.74	1.9
RT STA. 1436+65.00	TO STA. 1437+47.77	37.2	82.8	2.91	1.50	13.6
RT STA. 1441+24.91	TO STA. 1441+85.00	18.0	60.1		2.26	5.1
RT STA. 1441+85.00	TO STA. 1442+15.00	9.0	30.0		1.80	2.0
STAGE 2						
LT STA. 1436+35.00	TO STA. 1436+65.00	15.0	30.0		1.74	3.2
LT STA. 1436+65.00	TO STA. 1437+47.77	62.1	82.8	2.91	1.50	22.7
LT STA. 1441+24.91	TO STA. 1441+85.00	30.0	60.1		2.26	8.4
LT STA. 1441+85.00	TO STA. 1442+15.00	15.0	30.0		1.80	3.4
TOTAL		2,123.8	990.7			2,277.1
USE		2124*	991*			2,277

* SEE MAINLINE PAVING SCHEDULE FOR ADDITIONAL QUANTITY

LOCATION		40600982 HOT-MIX ASPHALT SURFACE REMOVAL - BUTT JOINT	44000155 HOT-MIX ASPHALT SURFACE REMOVAL, 1 1/2"
		SQ YD	SQ YD
I-74 (EB)			
STAGE 1			
STA. 1434+65.00	TO STA. 1434+95.00	72.7	
STA. 1434+95.00	TO STA. 1436+15.47		291.8
STA. 1439+92.97	TO STA. 1441+05.00		270.0
STA. 1441+05.00	TO STA. 1441+35.00	72.3	
STAGE 2			
STA. 1434+65.00	TO STA. 1434+95.00	60.9	
STA. 1434+95.00	TO STA. 1436+15.47		244.6
STA. 1439+92.97	TO STA. 1441+05.00		227.2
STA. 1441+05.00	TO STA. 1441+35.00	60.8	
I-74 (WB)			
STAGE 1			
STA. 1436+35.00	TO STA. 1436+65.00	74.4	
STA. 1436+65.00	TO STA. 1437+47.77		205.2
STA. 1441+24.91	TO STA. 1441+85.00		147.8
STA. 1441+85.00	TO STA. 1442+15.00	73.8	
STAGE 2			
STA. 1436+35.00	TO STA. 1436+65.00	59.3	
STA. 1436+65.00	TO STA. 1437+47.77		163.5
STA. 1441+24.91	TO STA. 1441+85.00		116.1
STA. 1441+85.00	TO STA. 1442+15.00	58.0	
TOTAL		532.1	1,666.2
USE		533	1,667

LOCATION		31200100 STABILIZED SUBBASE 4"
		SQ YD
I-74 (EB)		
STAGE 1		
STA. 1436+15.47	TO STA. 1436+80.99	129.8
STA. 1439+48.43	TO STA. 1439+92.97	78.2
STAGE 2		
STA. 1436+15.47	TO STA. 1436+56.04	60.9
STA. 1439+27.93	TO STA. 1439+92.97	110.1
I-74 (WB)		
STAGE 1		
STA. 1437+47.77	TO STA. 1437+92.76	79.3
STA. 1440+60.23	TO STA. 1441+24.91	127.4
STAGE 2		
STA. 1437+47.77	TO STA. 1438+13.29	111.1
STA. 1440+85.18	TO STA. 1441+24.91	59.2
TOTAL		756.1
USE		756

LOCATION		44000100 PAVEMENT REMOVAL
		SQ YD
I-74 (EB)		
STAGE 1		
STA. 1436+15.47	TO STA. 1436+54.30	53.2
STA. 1439+43.88	TO STA. 1439+92.97	27.6
STAGE 2		
STA. 1436+15.47	TO STA. 1436+36.14	14.6
STA. 1439+59.40	TO STA. 1439+92.97	25.7
I-74 (WB)		
STAGE 1		
STA. 1437+47.77	TO STA. 1437+72.86	28.5
STA. 1440+86.70	TO STA. 1441+24.91	52.1
STAGE 2		
STA. 1437+47.77	TO STA. 1437+82.20	27.5
STA. 1441+05.08	TO STA. 1441+24.91	13.6
TOTAL		242.7
USE		243

LOCATION		42000080 PAVEMENT CONNECTOR (PCC) FOR BRIDGE APPROACH SLAB	42001300 PROTECTIVE COAT
		SQ YD	SQ YD
I-74 (EB)			
STAGE 1			
STA. 1436+15.47	TO STA. 1436+85.54	140.9	140.9
STA. 1439+43.88	TO STA. 1439+92.97	89.4	89.4
STAGE 2			
STA. 1436+15.47	TO STA. 1436+60.59	70.1	70.1
STA. 1439+23.38	TO STA. 1439+92.97	119.3	119.3
I-74 (WB)			
STAGE 1			
STA. 1437+47.77	TO STA. 1437+97.31	90.4	90.4
STA. 1440+55.68	TO STA. 1441+24.91	138.5	138.5
STAGE 2			
STA. 1437+47.77	TO STA. 1438+13.29	120.3	120.3
STA. 1440+80.63	TO STA. 1441+24.91	68.4	68.4
TOTAL		837.3	837.3
USE		838	838

LOCATION		48101200 AGGREGATE SHOULDERS, TYPE B	
		THICKNESS INCH	TON
I-74 (EB)			
STAGE 1			
LT STA. 1433+65.00	TO STA. 1436+99.00	3.75	17.64
LT STA. 1439+55.50	TO STA. 1441+35.00	3.75	8.35
STAGE 2			
RT STA. 1434+54.00	TO STA. 1436+53.40	3.75	9.46
RT STA. 1439+09.90	TO STA. 1441+35.00	3.75	10.53
I-74 (WB)			
STAGE 1			
RT STA. 1436+35.00	TO STA. 1437+85.70	3.75	6.99
RT STA. 1440+42.20	TO STA. 1443+63.10	3.75	17.02
STAGE 2			
LT STA. 1436+30.00	TO STA. 1438+31.30	3.75	9.56
LT STA. 1440+87.80	TO STA. 1442+15.00	3.75	5.87
TOTAL			85.41
USE			86

LOCATION		44000300 CURB REMOVAL
		FOOT
I-74 (EB)		
PRE-STAGE A		
RT STA. 1430+42.00	TO STA. 1436+56.68	615
I-74 (WB)		
PRE-STAGE A		
LT STA. 1434+27.50	TO STA. 1438+34.80	407
TOTAL		1,022

LOCATION		44004250 PAVED SHOULDER REMOVAL
		SQ YD
I-74 (EB)		
PRE-STAGE A		
RT STA. 1430+42.00	TO STA. 1436+74.65	699.4
RT STA. 1438+99.41	TO STA. 1443+40.00	487.0
PRE-STAGE B		
LT STA. 1431+25.00	TO STA. 1437+11.14	397.8
LT STA. 1439+36.16	TO STA. 1443+40.00	270.1
STAGE 1		
LT STA. 1436+15.47	TO STA. 1437+11.14	37.5
LT STA. 1439+36.16	TO STA. 1439+92.97	36.1
STAGE 2		
RT STA. 1436+15.47	TO STA. 1436+74.65	67.0
RT STA. 1438+99.41	TO STA. 1439+92.97	104.4
I-74 (WB)		
PRE-STAGE A		
LT STA. 1434+27.50	TO STA. 1438+41.42	437.5
LT STA. 1440+65.98	TO STA. 1446+52.00	620.3
PRE-STAGE B		
RT STA. 1434+27.50	TO STA. 1438+04.77	268.9
RT STA. 1440+29.44	TO STA. 1445+45.00	353.4
STAGE 1		
RT STA. 1437+47.77	TO STA. 1438+04.77	39.3
RT STA. 1440+29.44	TO STA. 1441+24.91	63.2
STAGE 2		
LT STA. 1437+47.77	TO STA. 1438+41.42	97.2
LT STA. 1440+65.98	TO STA. 1441+24.91	62.9
TOTAL		4,041.8
USE		4,042

LOCATION	54213447	60100945	X6050065	61000115
	END SECTIONS 12"	PIPE DRAINS 12"	REMOVING INLETS (SPECIAL)	TYPE E INLET BOX, STANDARD 610001
	EACH	FOOT	EACH	EACH
I-74 (EB)				
PRE-STAGE A				
RT STA. 1431+18.09			1	
RT STA. 1433+85.90			1	
RT STA. 1436+54.06			1	
PRE-STAGE B				
LT STA. 1436+99.66			1	
STAGE 2				
RT STA. 1433+85.90				1
RT STA. 1436+29.16	1	40		1
FINAL PHASE				
RT STA. 1431+18.09				1
LT STA. 1436+73.89	1	29		1
I-74 (WB)				
PRE-STAGE A				
LT STA. 1435+48.78			1	
LT STA. 1438+31.66			1	
PRE-STAGE B				
RT STA. 1437+86.19			1	
STAGE 2				
LT STA. 1438+06.25	1	30		1
FINAL PHASE				
LT STA. 1435+48.78				1
RT STA. 1437+60.75	1	41		1
TOTAL	4	140	7	7

LOCATION	60108500
	PIPE UNDERDRAINS, TYPE 3
	FOOT
I-74 (EB)	
PRE-STAGE A	
RT STA. 1430+42.00 TO STA. 1436+51.17	609.17
RT STA. 1439+06.30 TO STA. 1443+40.00	433.70
PRE-STAGE B	
LT STA. 1431+25.00 TO STA. 1436+96.79	571.79
LT STA. 1439+33.68 TO STA. 1443+40.00	406.32
I-74 (WB)	
PRE-STAGE A	
LT STA. 1434+27.50 TO STA. 1438+29.10	401.60
LT STA. 1440+61.42 TO STA. 1446+52.00	590.58
PRE-STAGE B	
RT STA. 1434+27.50 TO STA. 1437+83.48	355.98
RT STA. 1440+34.04 TO STA. 1445+45.00	510.96
TOTAL	3,880.10
USE	3,880

LOCATION	64200116
	SHOULDER RUMBLE STRIPS, 16 INCH
	FOOT
I-74 (EB)	
FINAL PHASE	
RT STA. 1430+42.00 TO STA. 1436+15.47	573.5
RT STA. 1439+92.97 TO STA. 1443+40.00	347.0
LT STA. 1431+25.00 TO STA. 1436+15.47	490.5
LT STA. 1439+92.97 TO STA. 1443+40.00	347.0
I-74 (WB)	
FINAL PHASE	
RT STA. 1434+27.50 TO STA. 1437+47.77	320.3
RT STA. 1441+24.91 TO STA. 1445+45.00	420.1
LT STA. 1434+27.50 TO STA. 1437+47.77	320.3
LT STA. 1441+24.91 TO STA. 1446+52.00	527.1
TOTAL	3,345.7
USE	3,346

LOCATION	60600605
	CONCRETE CURB, TYPE B
	FOOT
I-74 (EB)	
STAGE 2	
RT STA. 1433+50.00 TO STA. 1436+39.92	290
FINAL PHASE	
RT STA. 1430+42.00 TO STA. 1433+50.00	308
I-74 (WB)	
STAGE 2	
LT STA. 1434+27.50 TO STA. 1438+18.41	391
TOTAL	989

LOCATION	63000001	63100085	63100167	63200310	72501000	78200005
	STEEL PLATE BEAM GUARDRAIL, TYPE A, 6 FOOT POSTS	TRAFFIC BARRIER TERMINAL, TYPE 6	TRAFFIC BARRIER TERMINAL, TYPE 1 (SPECIAL) TANGENT	GUARDRAIL REMOVAL	TERMINAL MARKER - DIRECT APPLIED	GUARDRAIL REFLECTORS, TYPE A
	FOOT	EACH	EACH	FOOT	EACH	EACH
I-74 (EB)						
STAGE 1						
LT STA. 1434+12.12 TO STA. 1436+99.62	200.0	1	1	175.0	1	4
STAGE 2						
RT STA. 1434+54.00 TO STA. 1436+54.00	162.5	1		200.0		4
I-74 (WB)						
STAGE 1						
RT STA. 1440+41.59 TO STA. 1443+29.09	200.0	1	1	175.0	1	4
STAGE 2						
LT STA. 1436+30.94 TO STA. 1438+18.44	150.0	1		187.5		4
LT STA. 1440+87.21 TO STA. 1441+99.71	75.0	1		625.0		
FINAL PHASE						
LT STA. 1441+99.71 TO STA. 1446+99.71	450.0		1		1	8
TOTAL	1,237.5	5	3	1,362.5	3	24
USE	1,237.5	5	3	1,363	3	24

MODEL: Schedule [Sheet]
FILE NAME: H:\Support\IDOT_CONNECT\Con guration\WorkSpaces\IDOTCAD CONNECT\WorkSets\2564.4 Piatt Bridge Replacement\CADD Data\CAD Sheets\D570024-sht-schedule.dgn

CEC Cummins Engineering Corporation
ENGINEERS & SURVEYORS

JOB = 2564.4	DESIGNED - CDS	REVISED -	
FILE NAME = D570024-sht-schedule.dgn	DRAWN - CDS	REVISED -	
PLOT SCALE = $SCALE$	CHECKED - CGF	REVISED -	
PLOT DATE = 3/12/2025	DATE - 1/09/2025	REVISED -	

STATE OF ILLINOIS
DEPARTMENT OF TRANSPORTATION

SCHEDULE OF QUANTITIES

SCALE: SHEET OF SHEETS STA. TO STA.

F.A.I. RTE.	SECTION	COUNTY	TOTAL SHEETS	SHEET NO.
72	(74-68VB)B	PIATT	93	15

CONTRACT NO. 70024

ILLINOIS FED. AID PROJECT

LOCATION	70107005	70307120	70300100	70300150
	PAVEMENT MARKING BLACKOUT TAPE, 5"	TEMPORARY PAVEMENT MARKING - LINE 4" - TYPE IV TAPE	SHORT TERM PAVEMENT MARKING	SHORT TERM PAVEMENT MARKING REMOVAL
	FOOT	FOOT	FOOT	SQ FT
I-74 (EB)				
PRE-STAGE C				
WHITE SKIP DASH LANE LINE				
CL STA. 1433+75.00 TO STA. 1435+89.70	54			22
SOLID WHITE EDGE LINE				
RT STA. 1433+75.00 TO STA. 1440+37.00	662			276
SOLID YELLOW LANE SHIFT LINE				
LT STA. 1433+75.00 TO STA. 1440+37.00		662		221
SOLID WHITE LANE SHIFT LINE				
RT STA. 1433+75.00 TO STA. 1440+37.00		662		221
PRE-STAGE D				
WHITE SKIP DASH LANE LINE				
CL STA. 1434+08.00 TO STA. 1436+09.70	50			21
SOLID YELLOW EDGE LINE				
LT STA. 1434+08.00 TO STA. 1437+08.00	300			125
LT STA. 1439+32.00 TO STA. 1440+77.50	146			61
SOLID YELLOW LANE SHIFT LINE				
LT STA. 1434+08.00 TO STA. 1440+77.50		670		223
SOLID WHITE LANE SHIFT LINE				
RT STA. 1434+08.00 TO STA. 1440+77.50		670		223
STAGE 1				
WHITE SKIP DASH LANE LINE				
CL STA. 1431+42.00 TO STA. 1433+71.10	57			24
SOLID WHITE EDGE LINE				
RT STA. 1431+42.00 TO STA. 1442+40.00	1,098			458
SOLID YELLOW LANE SHIFT LINE				
LT STA. 1431+42.00 TO STA. 1442+40.00		1,098		366
SOLID WHITE LANE SHIFT LINE				
RT STA. 1431+42.00 TO STA. 1442+40.00		1,098		366
STAGE 2				
WHITE SKIP DASH LANE LINE				
CL STA. 1432+25.00 TO STA. 1434+04.10	45			19
SOLID YELLOW EDGE LINE				
LT STA. 1432+25.00 TO STA. 1442+40.00	1,015			423
SOLID YELLOW LANE SHIFT LINE				
LT STA. 1432+25.00 TO STA. 1442+40.00		1,015		338

LOCATION	70107005	70307120	70300100	70300150
	PAVEMENT MARKING BLACKOUT TAPE, 5"	TEMPORARY PAVEMENT MARKING - LINE 4" - TYPE IV TAPE	SHORT TERM PAVEMENT MARKING	SHORT TERM PAVEMENT MARKING REMOVAL
	FOOT	FOOT	FOOT	SQ FT
SOLID WHITE LANE SHIFT LINE				
RT STA. 1432+25.00 TO STA. 1442+40.00		1,015		338
FINAL PHASE				
WHITE EDGE LINE				
RT STA. 1434+65.00 TO STA. 1441+35.00			16	6
WHITE LANE LINE				
CL STA. 1434+65.00 TO STA. 1441+35.00			68	23
YELLOW EDGE LINE				
LT STA. 1434+65.00 TO STA. 1441+35.00			16	6
I-74 (WB)				
PRE-STAGE C				
WHITE SKIP DASH LANE LINE				
STA. 1441+58.80 TO STA. 1443+94.00	59			25
SOLID WHITE EDGE LINE				
STA. 1436+93.50 TO STA. 1443+94.00	701			292
SOLID YELLOW LANE SHIFT LINE				
RT STA. 1436+93.50 TO STA. 1443+94.00		701		234
SOLID WHITE LANE SHIFT LINE				
LT STA. 1436+93.50 TO STA. 1443+94.00		701		234
PRE-STAGE D				
WHITE SKIP DASH LANE LINE				
CL STA. 1441+28.10 TO STA. 1443+32.00	51			21
SOLID YELLOW EDGE LINE				
RT STA. 1436+65.00 TO STA. 1443+32.00	667			278
SOLID YELLOW LANE SHIFT LINE				
RT STA. 1436+65.00 TO STA. 1443+32.00		671		224
SOLID WHITE LANE SHIFT LINE				
LT STA. 1436+65.00 TO STA. 1443+32.00		671		224
STAGE 1				
WHITE SKIP DASH LANE LINE				
CL STA. 1443+17.00 TO STA. 1445+52.00	59			24
SOLID WHITE EDGE LINE				
LT STA. 1435+27.50 TO STA. 1445+52.00	1,025			427
SOLID YELLOW LANE SHIFT LINE				
RT STA. 1435+27.50 TO STA. 1445+52.00		1,025		342

MODEL: Schedule [Sheet]
FILE NAME: h:\Support\IDOT_CONNECT\Con puration\WorkSpaces\IDOTCAD CONNECT\WorkSets\2564.4 Piatt Bridge Replacement\CADD Data\CAD Sheets\D570024-sht-schedule.dgn

CEC Cummins Engineering Corporation
ENGINEERS & SURVEYORS

JOB = 2564.4	DESIGNED - CDS	REVISED -	
FILE NAME = D570024-sht-schedule.dgn	DRAWN - CDS	REVISED -	
PLOT SCALE = $SCALE$	CHECKED - CGF	REVISED -	
PLOT DATE = 3/12/2025	DATE - 1/09/2025	REVISED -	

STATE OF ILLINOIS
DEPARTMENT OF TRANSPORTATION

SCHEDULE OF QUANTITIES

SCALE: SHEET OF SHEETS STA. TO STA.

F.A.I. RTE.	SECTION	COUNTY	TOTAL SHEETS	SHEET NO.
72	(74-68VB)B	PIATT	93	16
		CONTRACT NO. 70024		
	ILLINOIS	FED. AID PROJECT		

LOCATION	70107005 PAVEMENT MARKING BLACKOUT TAPE, 5"	70307120 TEMPORARY PAVEMENT MARKING - LINE 4" - TYPE IV TAPE	70300100 SHORT TERM PAVEMENT MARKING	70300150 SHORT TERM PAVEMENT MARKING REMOVAL
	FOOT	FOOT	FOOT	SQ FT
SOLID WHITE LANE SHIFT LINE				
LT STA. 1435+27.50 TO STA. 1445+52.00		1,025		342
STAGE 2				
WHITE SKIP DASH LANE LINE				
CL STA. 1442+66.30 TO STA. 1444+45.00	45			19
SOLID YELLOW EDGE LINE				
RT STA. 1435+27.50 TO STA. 1444+45.00	918			382
SOLID YELLOW LANE SHIFT LINE				
RT STA. 1435+27.50 TO STA. 1444+45.00		918		306
SOLID WHITE LANE SHIFT LINE				
LT STA. 1435+27.50 TO STA. 1444+45.00		918		306
FINAL PHASE				
WHITE EDGE LINE				
LT STA. 1436+35.00 TO STA. 1442+15.00			12	4
WHITE LANE LINE				
CL STA. 1436+35.00 TO STA. 1442+15.00			60	20
YELLOW EDGE LINE				
RT STA. 1436+35.00 TO STA. 1442+15.00			12	4
TOTAL	13,899	13,519	184	7,465

LOCATION	63300575 REMOVE AND REERECT RAIL ELEMENT OF EXISTING GUARDRAIL
	FOOT
I-74 (EB)	
STAGE A	
RT STA. 1430+17.00 TO STA. 1436+63.32	647
STAGE B	
RT STA. 1434+52.33 TO STA. 1437+02.33	250
I-74 (WB)	
STAGE A	
LT STA. 1434+03.00 TO STA. 1438+34.73	432
LT STA. 1440+83.48 TO STA. 1447+10.13	627
STAGE B	
LT STA. 1440+37.67 TO STA. 1442+87.67	250
TOTAL	2,206

LOCATION		70400100 TEMPORARY CONCRETE BARRIER	70400125 PINNING TEMPORARY CONCRETE BARRIER	70400200 RELOCATE TEMPORARY CONCRETE BARRIER
		FOOT	EACH	FOOT
I-74 (EB)				
PRE-STAGE C				
STA. 1434+50.10 TO STA. 1436+62.00	1:12 TAPER	212.5		
STA. 1436+62.00 TO STA. 1439+37.00		275.0		
PRE-STAGE D				
STA. 1434+65.60 TO STA. 1436+40.00	1:12 TAPER			175.0
STA. 1436+40.00 TO STA. 1439+77.50				275.0
STA. 1436+65.00 TO STA. 1439+52.50				
STAGE 1				
STA. 1432+28.30 TO STA. 1434+40.00	1:12 TAPER			212.5
STA. 1434+40.00 TO STA. 1441+40.00		437.5		275.0
STA. 1435+90.00 TO STA. 1440+27.50			99	
STAGE 2				
STA. 1432+65.50 TO STA. 1434+40.00	1:12 TAPER			175.0
STA. 1434+40.00 TO STA. 1441+40.00				700.0
STA. 1435+90.00 TO STA. 1440+27.50				
I-74 (WB)				
PRE-STAGE C				
STA. 1437+93.50 TO STA. 1440+81.00		287.5		
STA. 1440+81.00 TO STA. 1442+92.90	1:12 TAPER	212.5		
PRE-STAGE D				
STA. 1437+65.00 TO STA. 1441+02.50		12.5		325.0
STA. 1437+90.00 TO STA. 1440+77.50				
STA. 1441+02.50 TO STA. 1442+76.90	1:12 TAPER			175.0
STAGE 1				
STA. 1436+27.50 TO STA. 1442+40.00		337.5		275.0
STA. 1437+15.00 TO STA. 1441+52.50			99	
STA. 1442+40.00 TO STA. 1444+64.40	1:12 TAPER			225.0
STAGE 2				
STA. 1436+27.50 TO STA. 1442+40.00				612.5
STA. 1437+15.00 TO STA. 1441+52.50				
STA. 1442+40.00 TO STA. 1444+14.40	1:12 TAPER			175.0
TOTAL		1,775.0	198	3,600.0

MODEL: Schedule [Sheet]
FILE NAME: H:\Support\DOT_CONNECT\Construction\WorkSpaces\IDOTCAD CONNECT\WorkSets\2564.4 Piatt Bridge Replacement\CADD Data\CAD Sheets\D570024-sht-schedule.dgn

CEC Cummins Engineering Corporation
ENGINEERS & SURVEYORS

JOB = 2564.4	DESIGNED - CDS	REVISED -	
FILE NAME = D570024-sht-schedule.dgn	DRAWN - CDS	REVISED -	
PLOT SCALE = $SCALE$	CHECKED - CGF	REVISED -	
PLOT DATE = 6/26/2025	DATE - 1/09/2025	REVISED -	

STATE OF ILLINOIS
DEPARTMENT OF TRANSPORTATION

SCHEDULE OF QUANTITIES

SCALE: SHEET OF SHEETS STA. TO STA.

F.A.I. RTE.	SECTION	COUNTY	TOTAL SHEETS	SHEET NO.
72	(74-68VB)B	PIATT	93	17
		CONTRACT NO. 70024		
	ILLINOIS	FED. AID PROJECT		

LOCATION	70600250	70600350
	IMPACT ATTENUATORS, TEMPORARY (NON-REDIRECTIVE), TEST LEVEL 3	IMPACT ATTENUATORS, RELOCATE (NON-REDIRECTIVE), TEST LEVEL 3
	EACH	EACH
I-74 (EB)		
PRE-STAGE C		
STA. 1434+50.10	1	
PRE-STAGE D		
STA. 1434+65.60		1
STAGE 1		
STA. 1432+28.30		1
STAGE 2		
STA. 1432+65.50		1
I-74 (WB)		
PRE-STAGE C	1	
STA. 1442+92.90		
PRE-STAGE D		
STA. 1442+76.90		1
STAGE 1		
STA. 1444+64.40		1
STAGE 2		
STA. 1444+14.40		1
TOTAL	2	6

LOCATION	X6640108
	FENCE REMOVAL AND REINSTALLATION
	FOOT
I-74 (EB)	
SN 074-0069 (SW CORNER)	50
SN 074-0069 (SE CORNER)	50
I-74 (WB)	
SN 074-0070 (NW CORNER)	50
SN 074-0070 (NE CORNER)	50
TOTAL	200

LOCATION	78008310		78011025	
	POLYUREA PAVEMENT MARKING TYPE II - LINE 4"		GROOVING FOR RECESSED PAVEMENT MARKING 5"	
	WHITE	YELLOW	WHITE	YELLOW
	FOOT	FOOT	FOOT	FOOT
I-74 (EB)				
FINAL PHASE				
SOLID WHITE EDGE LINE				
RT STA. 1434+65.00 TO STA 1441+35.00	670		670	
WHITE SKIP DASH LANE LINE				
STA. 1434+65.00 TO STA 1441+35.00	168		168	
SOLID YELLOW EDGE LINE				
LT STA. 1434+65.00 TO STA 1441+35.00		670		670
I-74 (WB)				
FINAL PHASE				
SOLID WHITE EDGE LINE				
LT STA. 1436+35.00 TO STA 1442+15.00	580		580	
WHITE SKIP DASH LANE LINE				
STA. 1436+35.00 TO STA 1442+15.00	145		145	
SOLID YELLOW EDGE LINE				
RT STA. 1436+35.00 TO STA 1442+15.00		580		580
TOTAL	1,563	1,250	1,563	1,250
USE	2,813		2,813	

LOCATION	78100100	78300200
	RAISED REFLECTIVE PAVEMENT MARKER	RAISED REFLECTIVE PAVEMENT MARKER REMOVAL
	EACH	EACH
I-74 (EB)		
STAGE 1		
STA. 1434+65.00 TO STA. 1436+93.49		3
STA. 1439+19.99 TO STA. 1441+35.00		3
FINAL PHASE		
STA. 1434+65.00 TO STA. 1436+93.49	3	
STA. 1439+19.99 TO STA. 1441+35.00	3	
I-74 (WB)		
STAGE 1		
STA. 1436+35.00 TO STA. 1438+21.23		3
STA. 1440+47.73 TO STA. 1442+15.00		3
FINAL PHASE		
STA. 1436+35.00 TO STA. 1438+21.23	3	
STA. 1440+47.73 TO STA. 1442+15.00	3	
TOTAL	12	12

LOCATION	X6013700
	PIPE UNDERDRAIN REMOVAL (SPECIAL)
	FOOT
I-74 (EB)	
PRE-STAGE A	
RT STA. 1430+42.00 TO STA. 1436+51.17	609.17
RT STA. 1439+06.30 TO STA. 1443+40.00	433.70
PRE-STAGE B	
LT STA. 1431+25.00 TO STA. 1436+96.79	571.79
LT STA. 1439+33.68 TO STA. 1443+40.00	406.32
I-74 (WB)	
PRE-STAGE A	
LT STA. 1434+27.50 TO STA. 1438+29.10	401.60
LT STA. 1440+61.42 TO STA. 1446+52.00	590.58
PRE-STAGE B	
RT STA. 1434+27.50 TO STA. 1437+83.48	355.98
RT STA. 1440+34.04 TO STA. 1445+45.00	510.96
TOTAL	3,880.10
USE	3,880

LOCATION	Z0038700
	PERMANENT BENCH MARKS
	EACH
I-74 (EB)	1
I-74 (WB)	1
TOTAL	2

LOCATION	Z0004552
	APPROACH SLAB REMOVAL
	SQ YD
I-74 (EB)	
STAGE 1	
STA. 1436+40.56 TO STA. 1436+94.25	95.8
STA. 1439+19.23 TO STA. 1439+72.92	95.3
STAGE 2	
STA. 1436+40.56 TO STA. 1436+94.25	49.0
STA. 1439+19.23 TO STA. 1439+72.92	49.6
I-74 (WB)	
STAGE 1	
STA. 1437+68.30 TO STA. 1438+21.99	96.0
STA. 1440+46.97 TO STA. 1441+24.91	97.4
STAGE 2	
STA. 1437+68.30 TO STA. 1438+21.99	49.7
STA. 1440+46.97 TO STA. 1441+24.91	47.4
TOTAL	580.1
USE	580

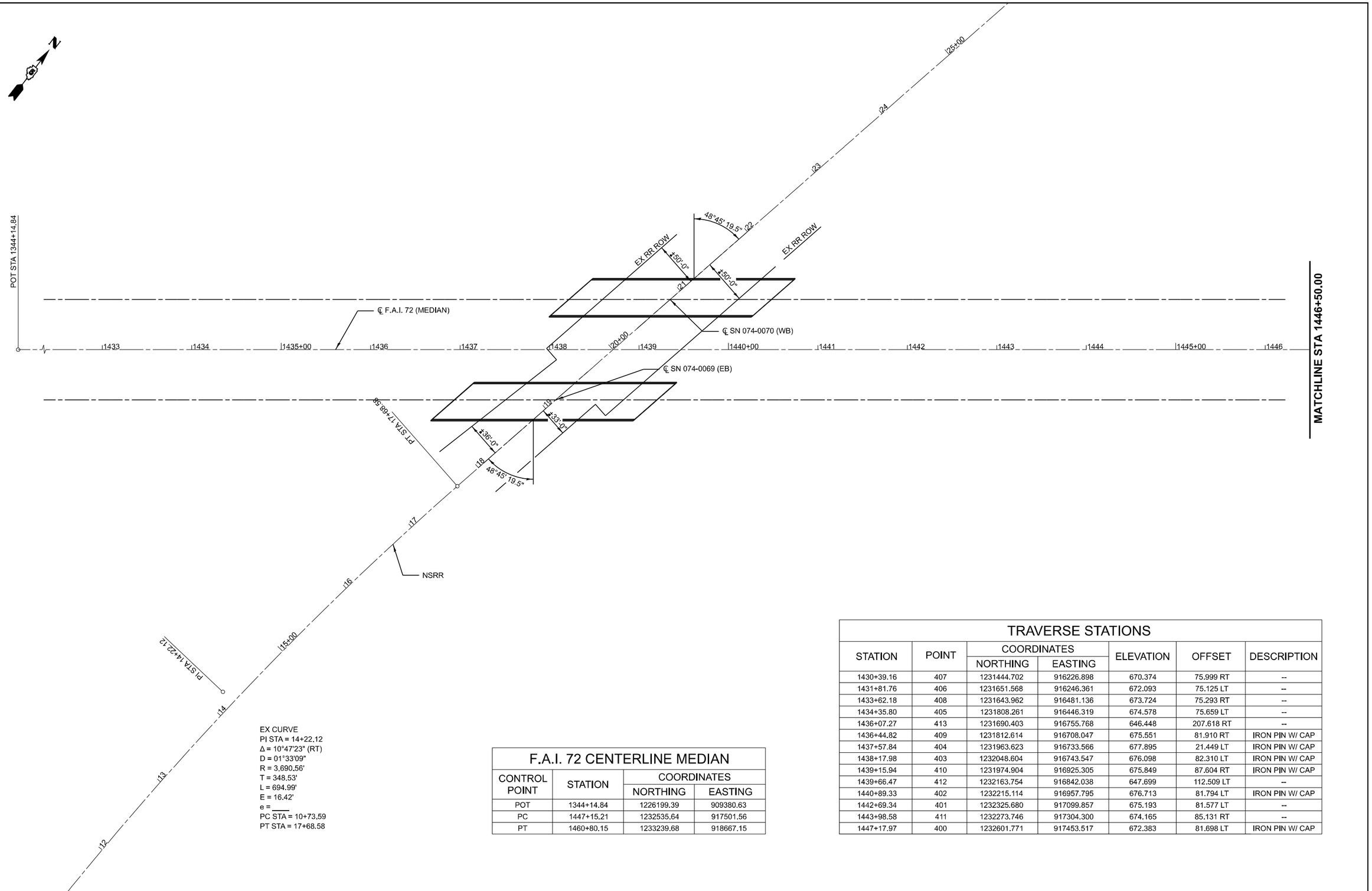

EX CURVE
PI STA = 14+22.12
Δ = 10°47'23" (RT)
D = 01°33'09"
R = 3,690.56'
T = 348.53'
L = 694.99'
E = 16.42'
e = ____
PC STA = 10+73.59
PT STA = 17+68.58

F.A.I. 72 CENTERLINE MEDIAN

CONTROL POINT	STATION	COORDINATES	
		NORTHING	EASTING
POT	1344+14.84	1226199.39	909380.63
PC	1447+15.21	1232535.64	917501.56
PT	1460+80.15	1233239.68	918667.15

TRAVERSE STATIONS

STATION	POINT	COORDINATES		ELEVATION	OFFSET	DESCRIPTION
		NORTHING	EASTING			
1430+39.16	407	1231444.702	916226.898	670.374	75.999 RT	--
1431+81.76	406	1231651.568	916246.361	672.093	75.125 LT	--
1433+62.18	408	1231643.962	916481.136	673.724	75.293 RT	--
1434+35.80	405	1231808.261	916446.319	674.578	75.659 LT	--
1436+07.27	413	1231690.403	916755.768	646.448	207.618 RT	--
1436+44.82	409	1231812.614	916708.047	675.551	81.910 RT	IRON PIN W/ CAP
1437+57.84	404	1231963.623	916733.566	677.895	21.449 LT	IRON PIN W/ CAP
1438+17.98	403	1232048.604	916743.547	676.098	82.310 LT	IRON PIN W/ CAP
1439+15.94	410	1231974.904	916925.305	675.849	87.604 RT	IRON PIN W/ CAP
1439+66.47	412	1232163.754	916842.038	647.699	112.509 LT	--
1440+89.33	402	1232215.114	916957.795	676.713	81.794 LT	IRON PIN W/ CAP
1442+69.34	401	1232325.680	917099.857	675.193	81.577 LT	--
1443+98.58	411	1232273.746	917304.300	674.165	85.131 RT	--
1447+17.97	400	1232601.771	917453.517	672.383	81.698 LT	IRON PIN W/ CAP

MODEL: ATB 1 [Sheet]
FILE NAME: H:\Support\IDOT_CONNECT\Configuration\WorkSpaces\IDOT\CAD CONNECT\WorkSets\2564.4 Piatt Bridge Replacement\CADD Data\CAD Sheets\D570024-sht-ATB.dgn

CEC Cummins Engineering Corporation
ENGINEERS & SURVEYORS

JOB = 2564.4	DESIGNED - CDS	REVISED -	
FILE NAME = D570024-sht-ATB.dgn	DRAWN - CDS	REVISED -	
PLOT SCALE = $SCALES	CHECKED - CGF	REVISED -	
PLOT DATE = 6/18/2025	DATE - 1/09/2025	REVISED -	

STATE OF ILLINOIS
DEPARTMENT OF TRANSPORTATION

ALIGNMENT, TIES, AND BENCHMARKS

SCALE: 1"=50' | SHEET OF SHEETS | STA. TO STA.

F.A.I. RTE.	SECTION	COUNTY	TOTAL SHEETS	SHEET NO.
72	(74-68VB)B	PIATT	93	19
		CONTRACT NO. 70024		
		ILLINOIS	FED. AID PROJECT	

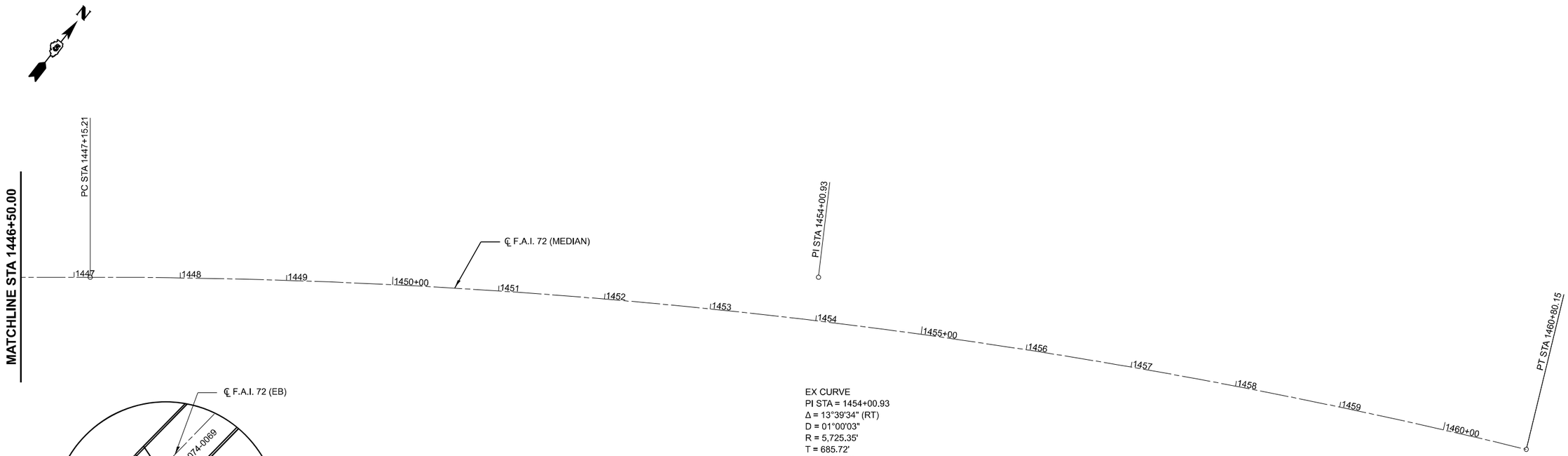

EX CURVE
PI STA = 1454+00.93
Δ = 13°39'34" (RT)
D = 01°00'03"
R = 5,725.35'
T = 685.72'
L = 1364.94'
E = 40.92'
e = ____
PC STA = 1447+15.21
PT STA = 1460+80.15

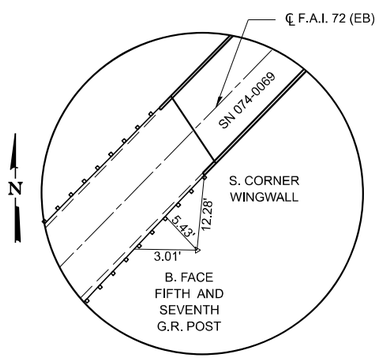

POINT 409
STA 1436+44.82
O/S 81.90' RT
IRON PIN W/ CAP

BM#2234 - CHISELED SQUARE TOP OF NW WINGWALL OF EB BRIDGE
STA. 1437+02.66, 37.32' RT
ELEV. 679.881

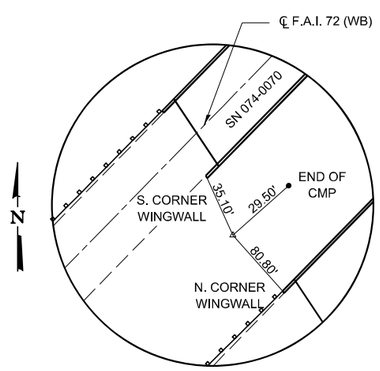

POINT 404
STA 1437+57.84
O/S 21.45' LT
IRON PIN W/ CAP

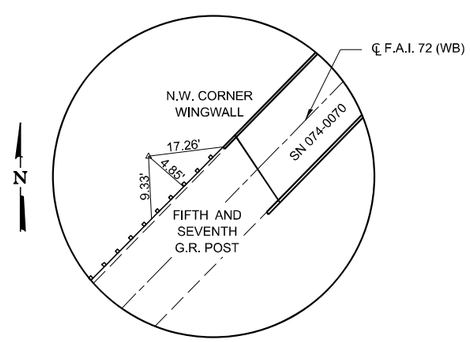

POINT 403
STA 1438+17.98
O/S 82.30' LT
IRON PIN W/ CAP

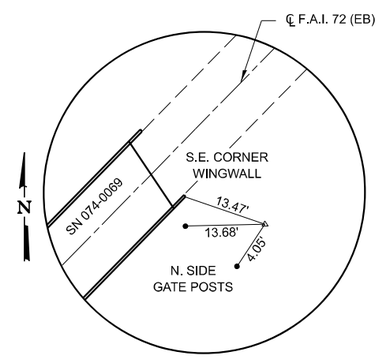

POINT 410
STA 1439+15.94
O/S 87.60' RT
IRON PIN W/ CAP

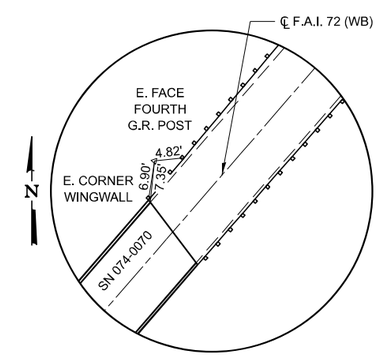

POINT 402
STA 1440+89.93
O/S 81.80' LT
IRON PIN W/ CAP

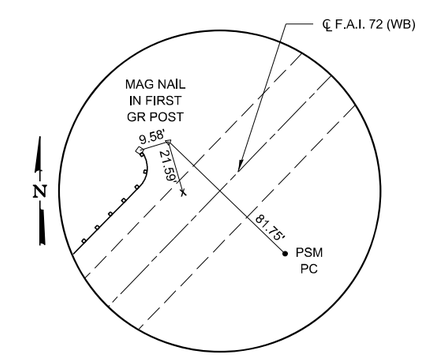

POINT 400
STA 1447+17.97
O/S 81.70' LT
IRON PIN W/ CAP

MODEL: ATB 2 [Sheet]
FILE NAME: H:\Support\DOT_CONNECT\Con guration\WorkSpaces\DOTCAD CONNECT\WorkSets\2364.4 Piatt Bridge Replacement\CADD Data\CAD_Sheets\D570024-sht-ATB.dgn

CEC Cummins Engineering Corporation ENGINEERS & SURVEYORS	JOB = 2564.4	DESIGNED - CDS	REVISED -	STATE OF ILLINOIS DEPARTMENT OF TRANSPORTATION	ALIGNMENT, TIES, AND BENCHMARKS
	FILE NAME = D570024-sht-ATB.dgn	DRAWN - CDS	REVISED -		
	PLOT SCALE = $SCALES	CHECKED - CGF	REVISED -		
	PLOT DATE = 3/12/2025	DATE - 1/09/2025	REVISED -		

SCALE: 1"=50' | SHEET OF SHEETS | STA. TO STA.

F.A.I. RTE.	SECTION	COUNTY	TOTAL SHEETS	SHEET NO.
72	(74-68VB)B	PIATT	93	20
		CONTRACT NO. 70024		
	ILLINOIS	FED. AID PROJECT		

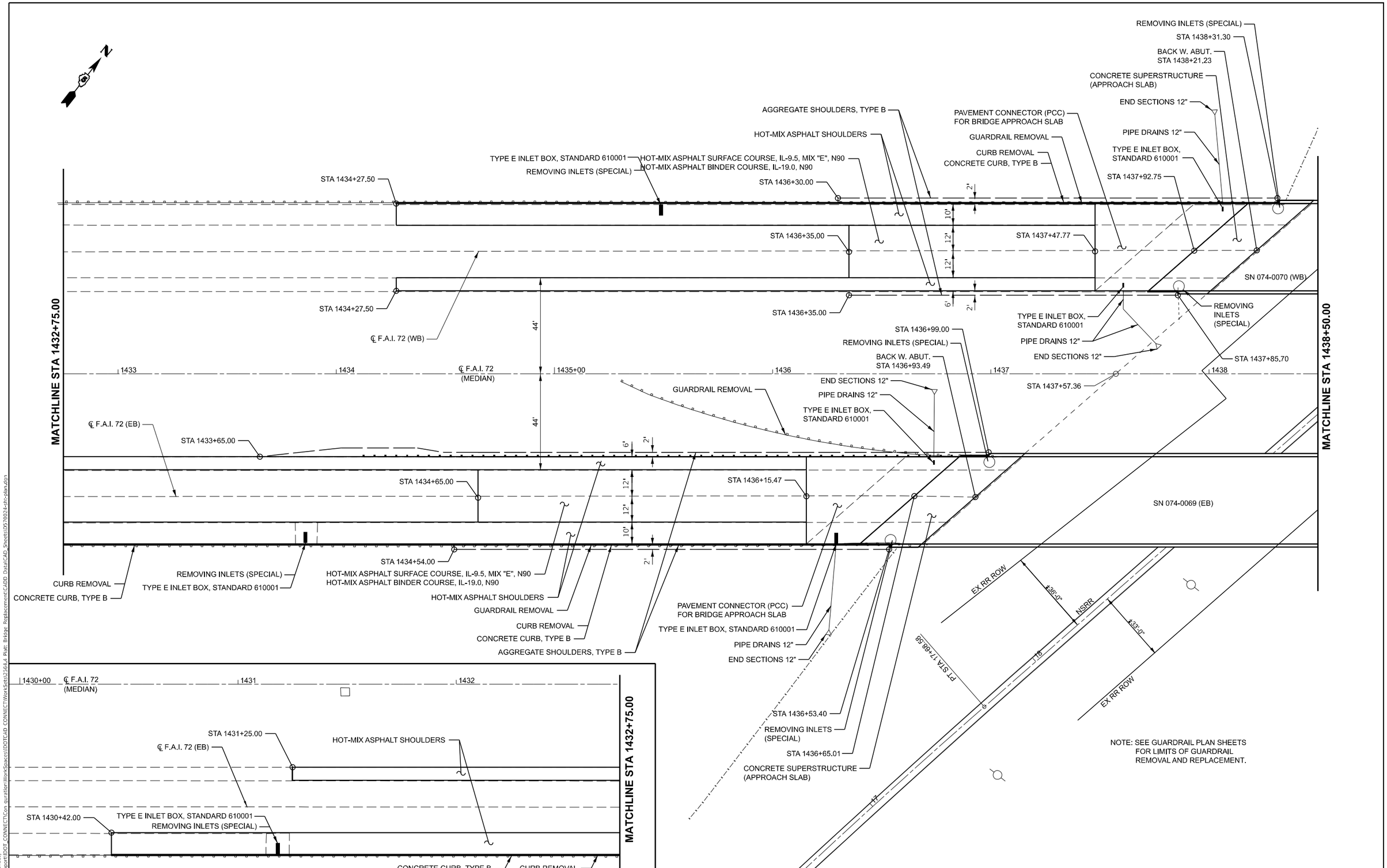

MODEL: Plans 1 [Sheet]
FILE NAME: H:\Support\DOT_CONNECT\Con guration\WorkSpaces\DOTCAD CONNECT\WorkSets\2564.4 Piatt Bridge Replacement\CADD Data\CAD Sheets\D570024-sht-plan.dgn

CEC Cummins Engineering Corporation — ENGINEERS & SURVEYORS	JOB = 2564.4	DESIGNED - CDS	REVISED -	STATE OF ILLINOIS DEPARTMENT OF TRANSPORTATION	PLAN
	FILE NAME = D570024-sht-plan.dgn	DRAWN - CDS	REVISED -		
	PLOT SCALE = $SCALES	CHECKED - CGF	REVISED -		
	PLOT DATE = 6/18/2025	DATE - 1/09/2025	REVISED -		

SCALE: 1"=20' | SHEET OF SHEETS | STA. 1431+00.00 TO STA. 1438+50.00

F.A.I. RTE.	SECTION	COUNTY	TOTAL SHEETS	SHEET NO.
72	(74-68VB)B	PIATT	93	21
		CONTRACT NO. 70024		
	ILLINOIS	FED. AID PROJECT		

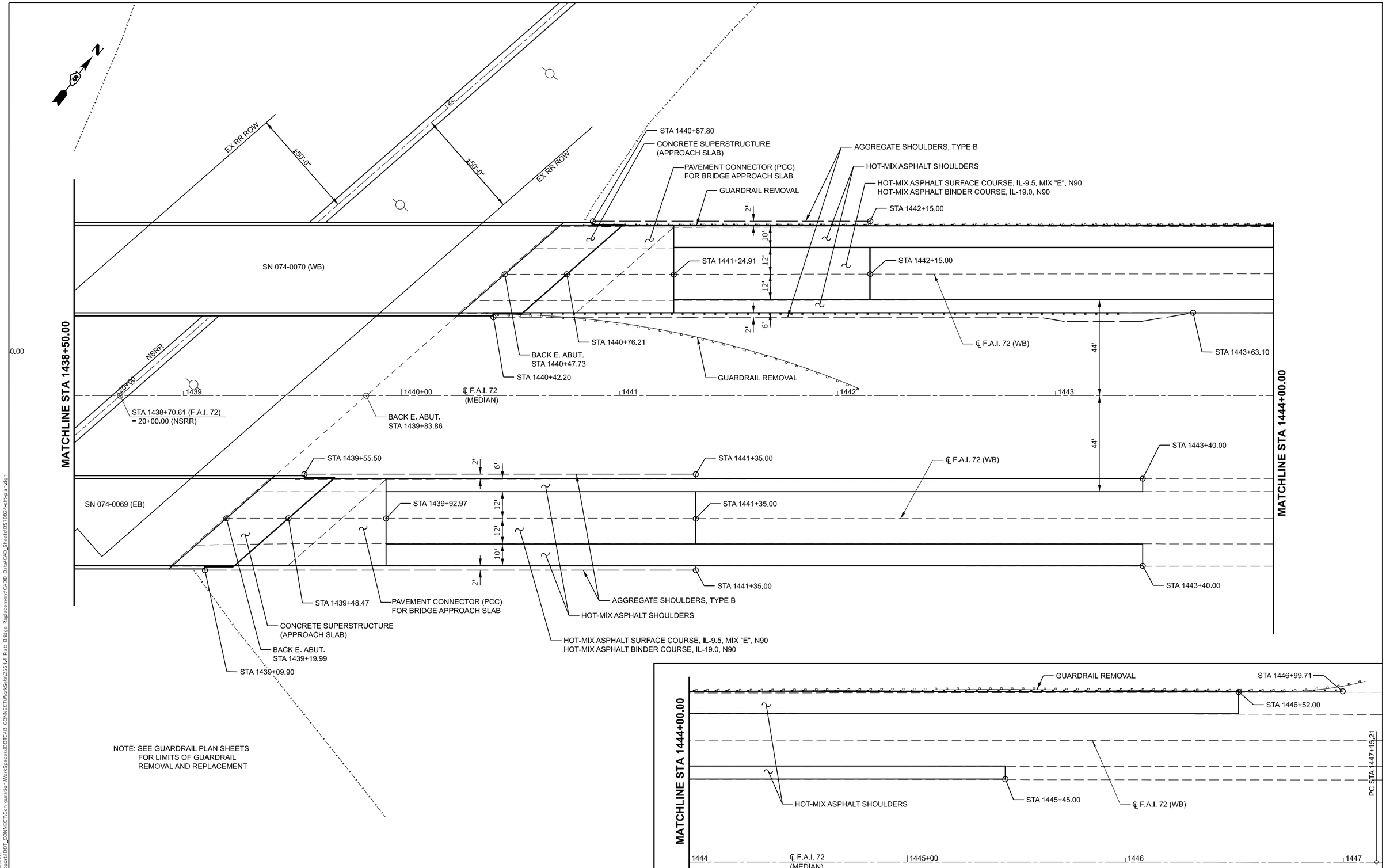

MODEL: Plans 2 (Sheet)
FILE NAME: H:\Support\IDOT_CONNECT\Configuration\WorkSpaces\IDOTCAD CONNECT\WorkSets\2564.4 Piatt Bridge Replacement\CADD Data\CAD Sheets\D570024-sht-plan.dgn

CEC Cummins Engineering Corporation — ENGINEERS & SURVEYORS	JOB = 2564.4	DESIGNED - CDS	REVISED -	STATE OF ILLINOIS DEPARTMENT OF TRANSPORTATION
	FILE NAME = D570024-sht-plan.dgn	DRAWN - CDS	REVISED -	
	PLOT SCALE = 5SCALES	CHECKED - CGF	REVISED -	
	PLOT DATE = 6/18/2025	DATE - 1/09/2025	REVISED -	

PLAN

SCALE: 1"=20' | SHEET OF SHEETS | STA. 1438+50.00 TO STA. 1444+50.00

F.A.I. RTE.	SECTION	COUNTY	TOTAL SHEETS	SHEET NO.
72	(74-68VB)B	PIATT	93	22

CONTRACT NO. 70024

ILLINOIS | FED. AID PROJECT

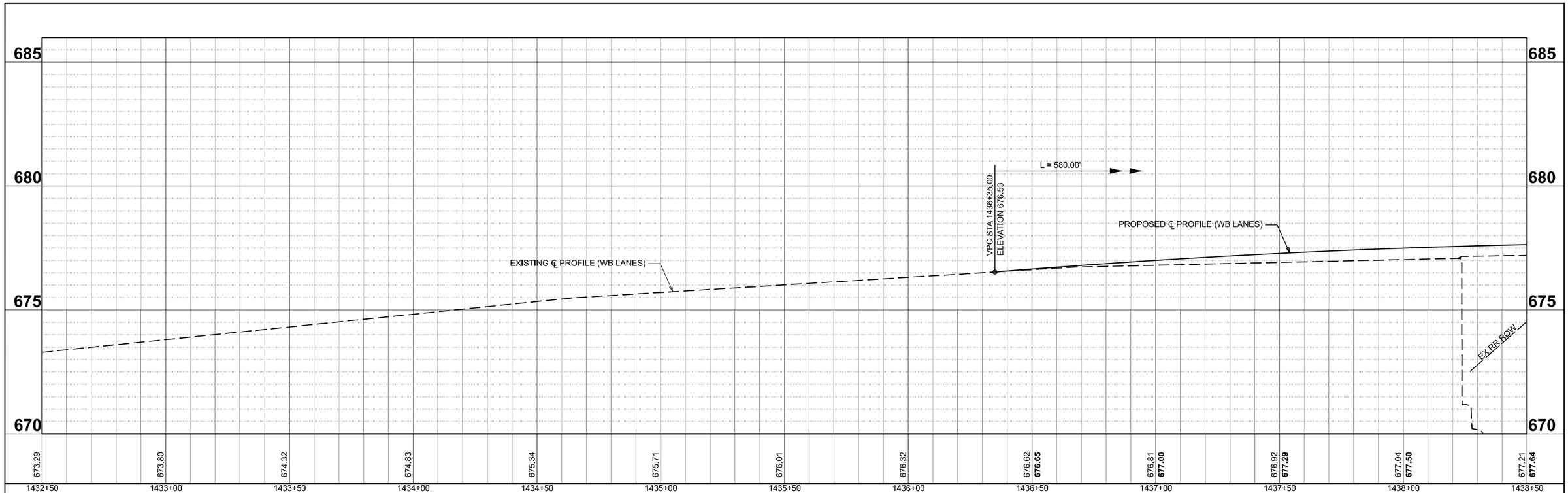

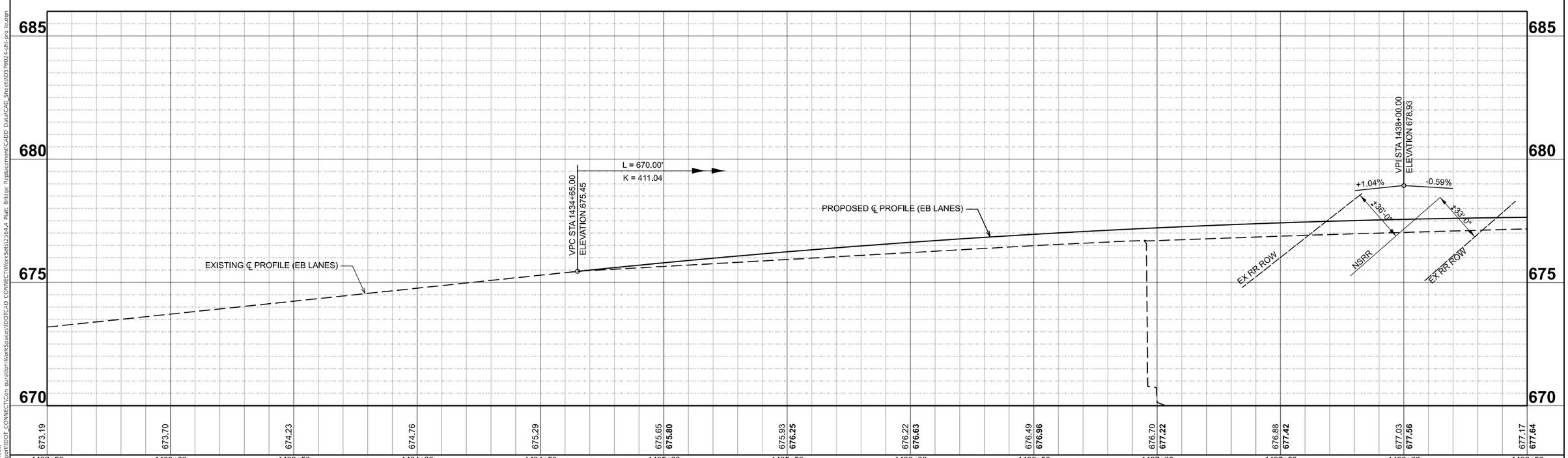

MODEL: Pro les [Sheet]
FILE NAME: H:\Support\IDOT_CONNECT\Con guration\WorkSpaces\IDOT\CAD CONNECT\WorkSets\2564.4 Piatt Bridge Replacement\CADD Data\CAD Sheets\D570024-sht-pro le.dgn

CEC Cummins Engineering Corporation
ENGINEERS & SURVEYORS

JOB = 2564.4	DESIGNED - CDS	REVISED -	
FILE NAME = D570024-sht-pro le.dgn	DRAWN - CDS	REVISED -	
PLOT SCALE = 5SCALES	CHECKED - CGF	REVISED -	
PLOT DATE = 6/18/2025	DATE - 1/09/2025	REVISED -	

STATE OF ILLINOIS
DEPARTMENT OF TRANSPORTATION

PROFILE

SCALE: 1"=20' | SHEET OF SHEETS | STA. 1432+50.00 TO STA. 1438+50.00

F.A.I. RTE.	SECTION	COUNTY	TOTAL SHEETS	SHEET NO.
72	(74-68VB)B	PIATT	93	23

CONTRACT NO. 70024

ILLINOIS | FED. AID PROJECT

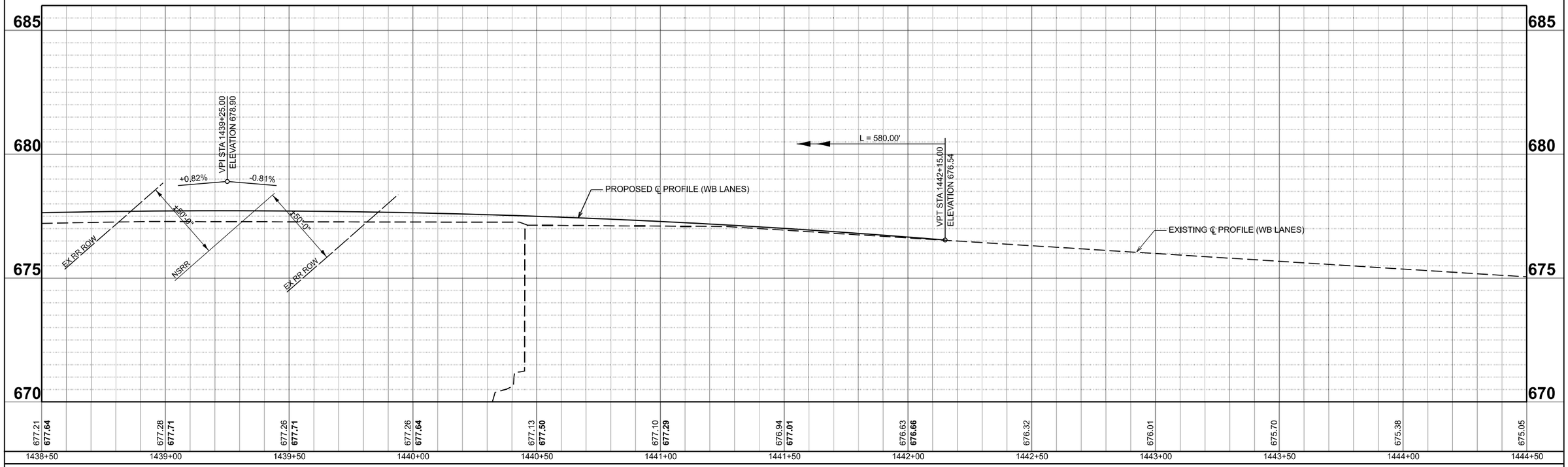

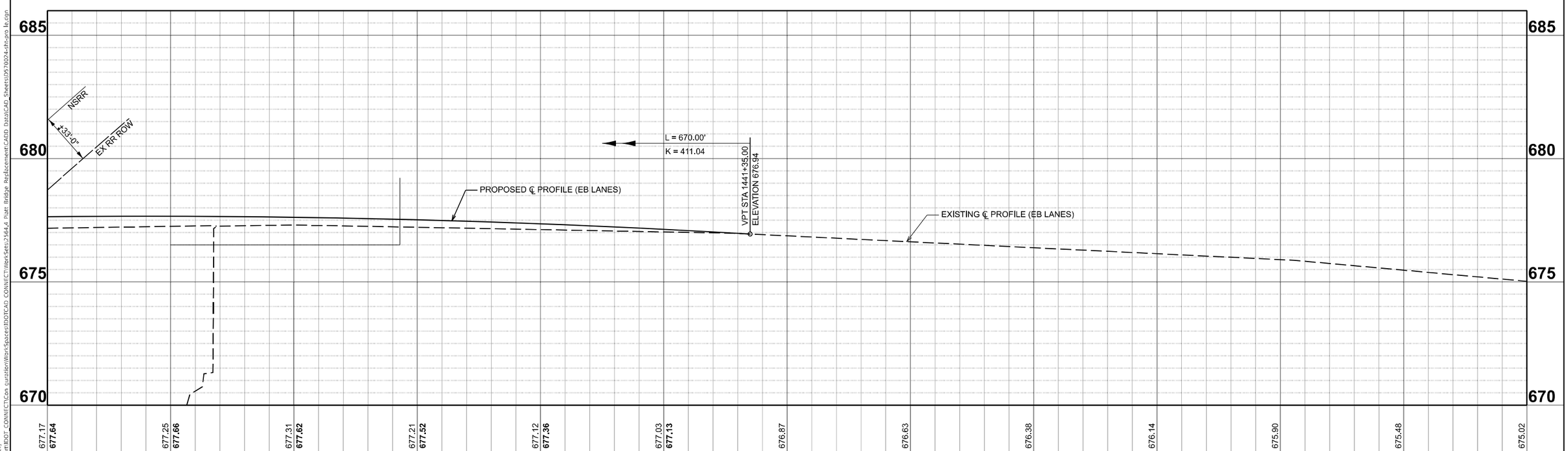

MODEL: Pro les [Sheet]
FILE NAME: H:\Support\DOT_CONNECT\Configuration\WorkSpaces\IDOTCAD_CONNECT\WorkSets\2564.4 Piatt Bridge Replacement\CADD Data\CAD Sheets\D570024-sht-pro le.dgn

CEC Cummins Engineering Corporation — ENGINEERS & SURVEYORS	JOB = 2564.4	DESIGNED - CDS	REVISED -	STATE OF ILLINOIS DEPARTMENT OF TRANSPORTATION	PROFILE
	FILE NAME = D570024-sht-pro le.dgn	DRAWN - CDS	REVISED -		
	PLOT SCALE = $SCALE$	CHECKED - CGF	REVISED -		
	PLOT DATE = 6/18/2025	DATE - 1/09/2025	REVISED -		SCALE: 1"=20' SHEET OF SHEETS STA. 1438+50.00 TO STA. 1444+50.00

F.A.I. RTE.	SECTION	COUNTY	TOTAL SHEETS	SHEET NO.
72	(74-68VB)B	PIATT	93	24

CONTRACT NO. 70024

ILLINOIS FED. AID PROJECT

LEGEND

WORK ZONE

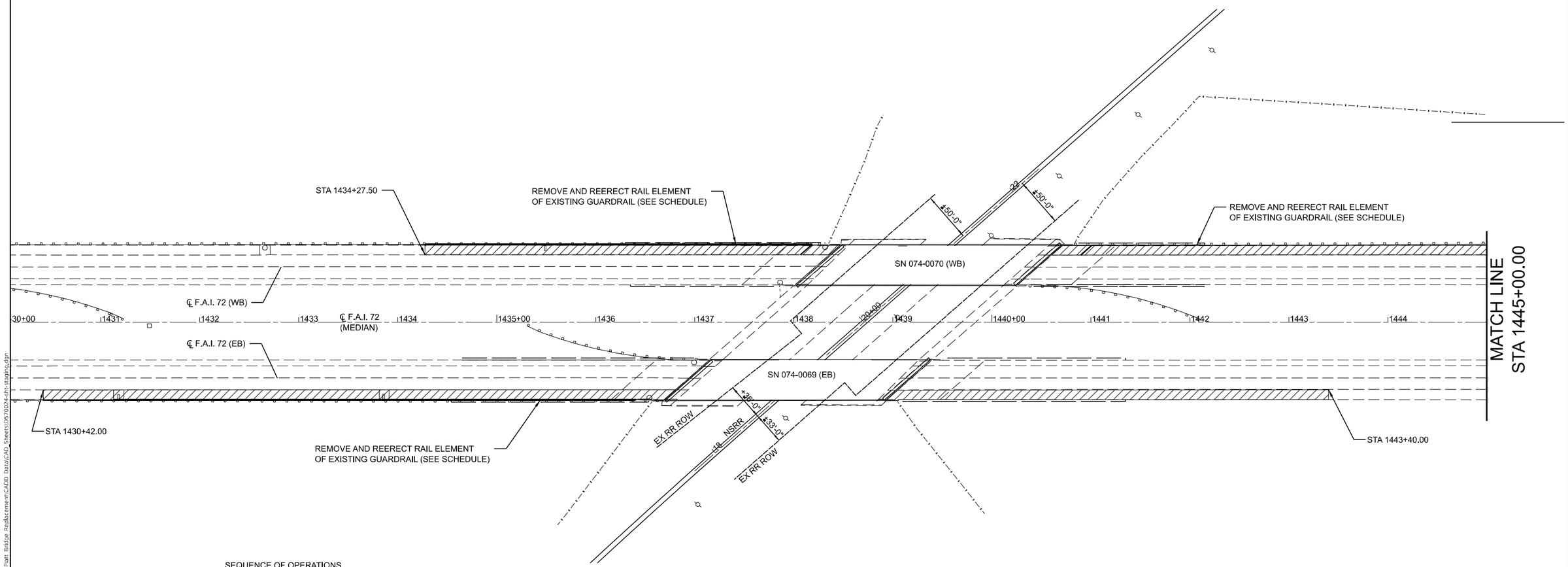

SEQUENCE OF OPERATIONS

PRE-STAGE A

1. INSTALL TRAFFIC CONTROL DEVICES PER HIGHWAY STANDARD 701400 AND 701401 FOR PRE-STAGE A TRAFFIC.
2. REMOVE RAIL ELEMENTS (SEE SCHEDULE FOR LOCATIONS).
3. REMOVE OUTSIDE SHOULDER (PAVED SHOULDER REMOVAL).
4. REMOVE INLETS (SEE SCHEDULE FOR LOCATIONS).
5. REMOVE CURB ALONG EXISTING SHOULDER TO ENSURE POSITIVE DRAINAGE DURING CONSTRUCTION (SEE SCHEDULE FOR LOCATIONS).
6. REMOVE MAT UNDERDRAINS AND PIPE UNDERDRAINS (PIPE UNDERDRAIN REMOVAL (SPECIAL)) AND CONSTRUCT PIPE UNDERDRAINS, TYPE 3. VOIDS LEFT FROM PIPE UNDERDRAIN REMOVAL (SPECIAL) SHALL BE FILLED WITH AGGREGATE MATERIAL AS REQUIRED BY THE STANDARD SPECIFICATIONS. THIS WORK WILL NOT BE PAID FOR SEPARATELY, BUT SHALL BE INCLUDED IN THE COST OF PIPE UNDERDRAINS, TYPE 3 AND NO ADDITIONAL COMPENSATION WILL BE ALLOWED.
7. CONSTRUCT OUTSIDE SHOULDER (HOT-MIX ASPHALT SURFACE COURSE, IL-9.5, MIX "E", N90 (1 1/2") AND HOT-MIX ASPHALT BINDER COURSE, IL-19.0, N90 (9")).
8. RE-ERECT GUARDRAIL RAIL ELEMENTS (SEE SCHEDULE FOR LOCATIONS).

MAINTENANCE OF TRAFFIC NOTES

1. PRE-STAGE A
   TRAFFIC CONTROL SHALL BE DONE IN ACCORDANCE WITH HIGHWAY STANDARD 701400 AND 701401 UTILIZING LANE CLOSURE WITH BARRELS.

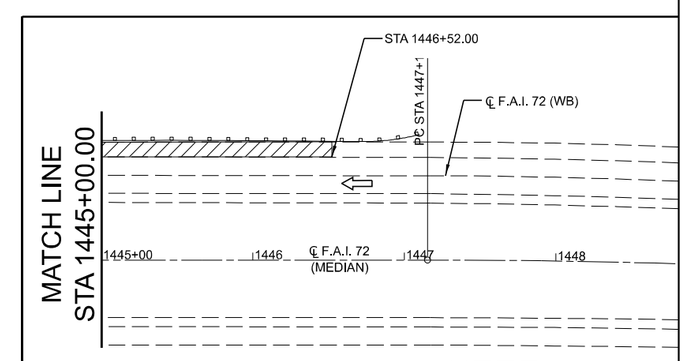

CEC Cummins Engineering Corporation ENGINEERS & SURVEYORS	JOB = 2564.4	DESIGNED - CGF	REVISED -	STATE OF ILLINOIS DEPARTMENT OF TRANSPORTATION	TRAFFIC CONTROL STAGING PLAN PRE-STAGE A	F.A. RTE.	SECTION	COUNTY	TOTAL SHEETS / SHEET NO.
	FILE NAME = D570024-sht-staging.dgn	DRAWN - CGF	REVISED -			72	(74-68VB)B	PIATT	93 / 25
	PLOT SCALE = $SCALE$	CHECKED - THF	REVISED -					CONTRACT NO. 70024	
	PLOT DATE = 6/18/2025	DATE - 2/12/2025	REVISED -		SCALE: 1"=50' SHEET OF SHEETS STA. TO STA.		ILLINOIS	FED. AID PROJECT	

MODEL: Pre-Stage A-B-C-D [Sheet]
FILE NAME: H:\Support\IDOT CONNECT\Construction\WorkSpaces\IDOTCAD CONNECT\WorkSets\2564.4 Piatt Bridge Replacement\CADD Data\CAD Sheets\D570024-sht-staging.dgn

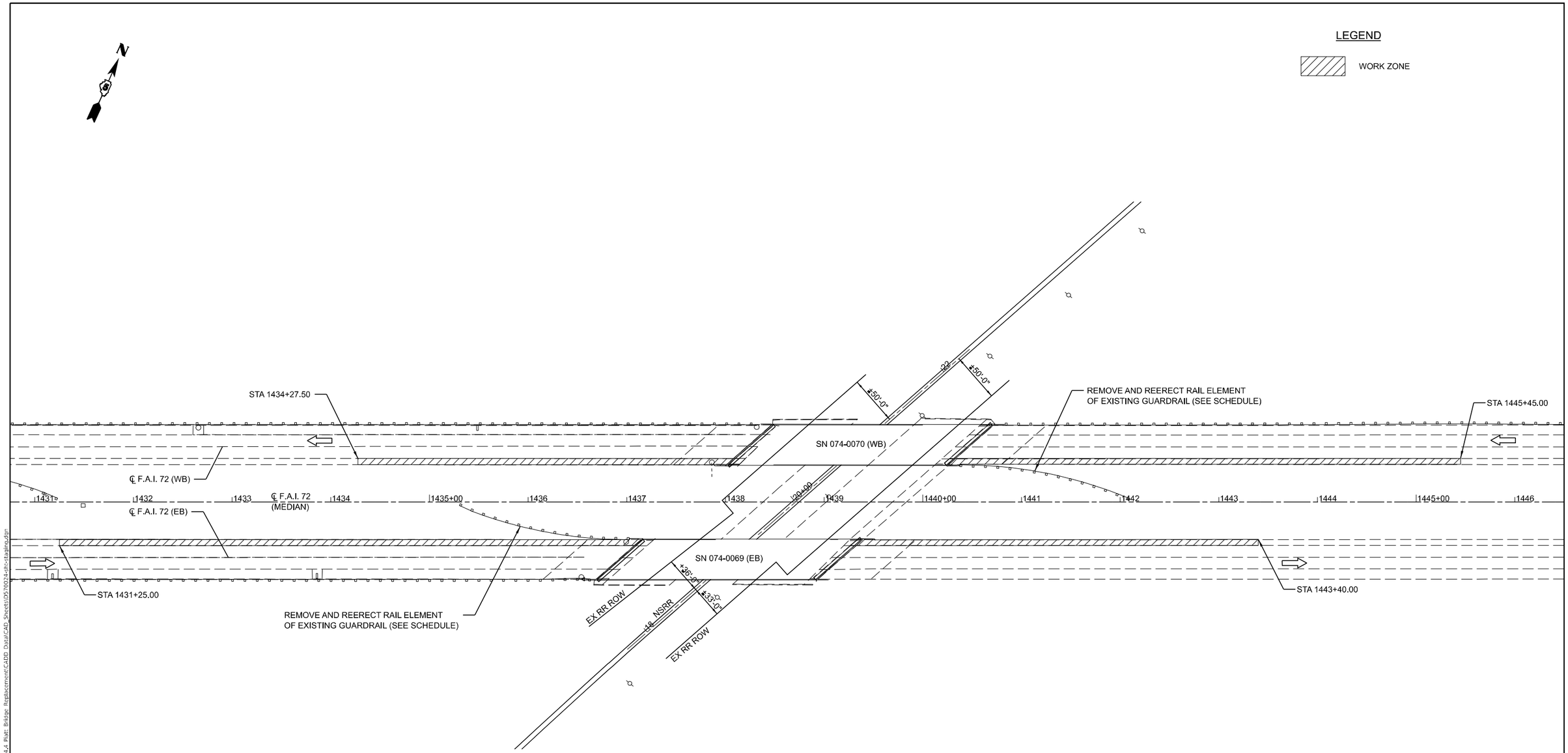

SEQUENCE OF OPERATIONS

PRE-STAGE B

1. INSTALL TRAFFIC CONTROL DEVICES PER HIGHWAY STANDARD 701400 AND 701401 FOR PRE-STAGE B TRAFFIC.

2. REMOVE RAIL ELEMENTS (SEE SCHEDULE FOR LOCATIONS).

3. REMOVE INSIDE SHOULDER (PAVED SHOULDER REMOVAL).

4. REMOVE MAT UNDERDRAINS AND PIPE UNDERDRAINS (PIPE UNDERDRAIN REMOVAL (SPECIAL)) AND CONSTRUCT PIPE UNDERDRAINS, TYPE 3. VOIDS LEFT FROM PIPE UNDERDRAIN REMOVAL (SPECIAL) SHALL BE FILLED WITH AGGREGATE MATERIAL AS REQUIRED BY THE STANDARD SPECIFICATIONS. THIS WORK WILL NOT BE PAID FOR SEPARATELY, BUT SHALL BE INCLUDED IN THE COST OF PIPE UNDERDRAINS, TYPE 3 AND NO ADDITIONAL COMPENSATION WILL BE ALLOWED.

5. CONSTRUCT OUTSIDE SHOULDER (HOT-MIX ASPHALT SURFACE COURSE, IL-9.5, MIX "E", N90 (1 1/2") AND HOT-MIX ASPHALT BINDER COURSE, IL-19.0, N90 (9")).

6. RE-ERECT GUARDRAIL RAIL ELEMENTS (SEE SCHEDULE FOR LOCATIONS).

MAINTENANCE OF TRAFFIC NOTES

PRE-STAGE B

1. TRAFFIC CONTROL SHALL BE DONE IN ACCORDANCE WITH HIGHWAY STANDARD 701400 AND 701401 UTILIZING LANE CLOSURE WITH BARRELS.

MODEL: Pre-Stage A-B-C-D [Sheet]
FILE NAME: H:\Support\IDOT_CONNECT\Construction\Work\Spaces\IDOTCAD CONNECT\Work\Sets\2564.4 Piatt Bridge Replacement\CADD Data\CAD_Sheets\D570024-sht-staging.dgn

CEC Cummins Engineering Corporation ENGINEERS & SURVEYORS	JOB = 2564.4	DESIGNED - CGF	REVISED -	STATE OF ILLINOIS DEPARTMENT OF TRANSPORTATION	TRAFFIC CONTROL STAGING PLAN PRE-STAGE B
	FILE NAME = D570024-sht-staging.dgn	DRAWN - CGF	REVISED -		
	PLOT SCALE = 55CALES	CHECKED - THF	REVISED -		
	PLOT DATE = 6/18/2025	DATE - 2/12/2025	REVISED -		SCALE: 1"=50' SHEET OF SHEETS STA. TO STA.

F.A. RTE.	SECTION	COUNTY	TOTAL SHEETS	SHEET NO.
72	(74-68VB)B	PIATT	93	26
		CONTRACT NO. 70024		
	ILLINOIS	FED. AID PROJECT		

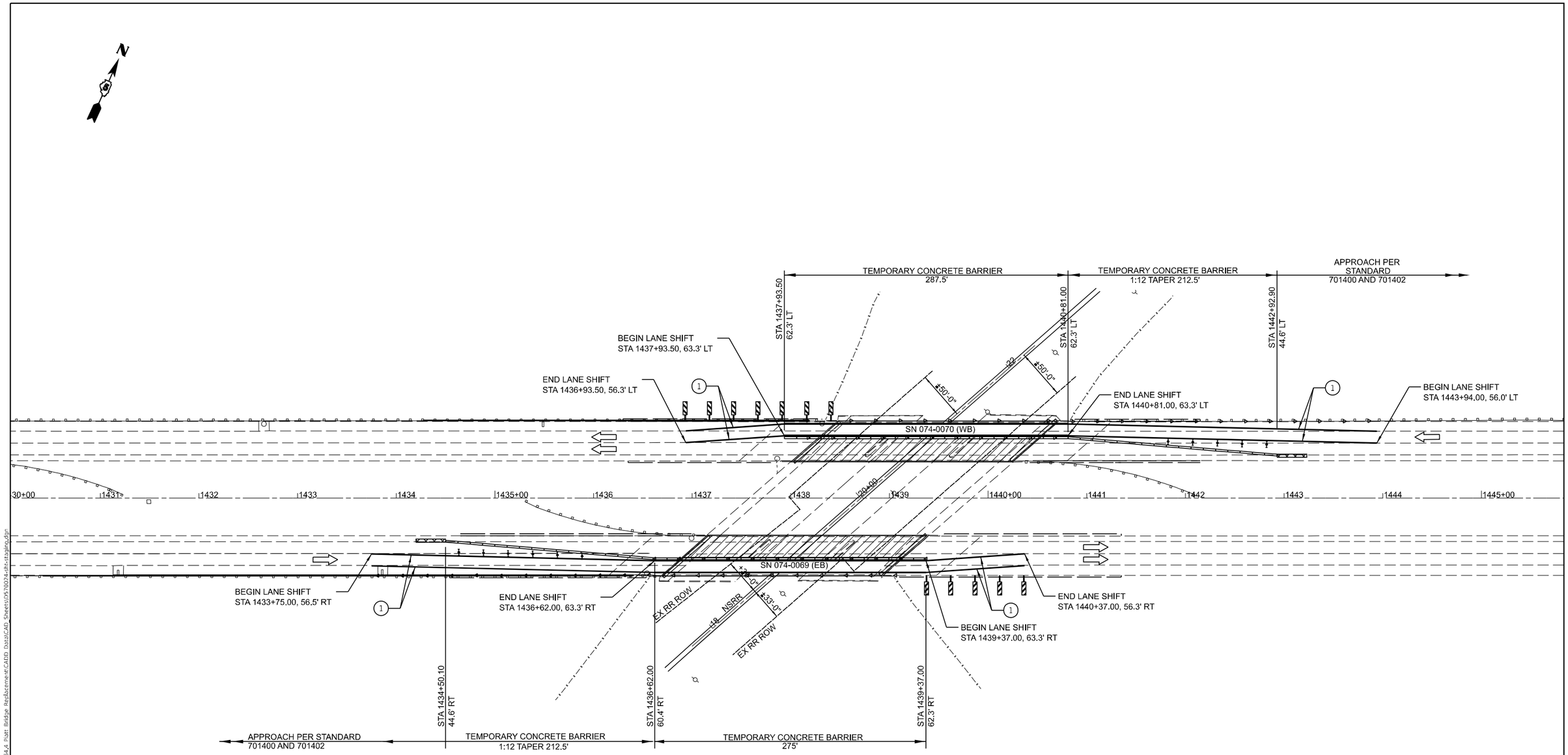

SEQUENCE OF OPERATIONS

PRE-STAGE C

1. INSTALL TEMPORARY CONCRETE BARRIER, TEMPORARY IMPACT ATTENUATORS, TEMPORARY PAVEMENT MARKINGS AND OTHER TRAFFIC CONTROL DEVICES AS SHOWN IN THE PLANS FOR PRE-STAGE C TRAFFIC.

2. REMOVE AND REPLACE HMA WEARING SURFACE ON MEDIAN SIDE OF EACH STRUCTURE.

MAINTENANCE OF TRAFFIC NOTES

PRE-STAGE C

1. SEE TRAFFIC CONTROL AND PROTECTION STANDARDS 701400, 701401, 701402, AND 704001 FOR DETAILS NOT SHOWN.

2. ALL WORK WITHOUT TEMPORARY CONCRETE BARRIER SHALL BE IN ACCORDANCE WITH TRAFFIC CONTROL AND PROTECTION STANDARD 701401.

3. EXISTING PAVEMENT MARKINGS THAT CONFLICT WITH THE TEMPORARY PAVEMENT MARKINGS SHALL BE COVERED WITH PAVEMENT MARKING BLACKOUT TAPE, 5".

4. OFFSETS TO TEMPORARY CONCRETE BARRIER ARE TO THE FACE OF THE BARRIER ADJACENT TO THE OPEN TRAFFIC.

MODEL: Pre-Stage A-B-C-D [Sheet]
FILE NAME: H:\Support\IDOT_CONNECT\Con guration\WorkSpaces\IDOTCAD CONNECT\WorkSets\2564.4 Piatt Bridge Replacement\CADD Data\CAD Sheets\D570024-sht-staging.dgn

CEC Cummins Engineering Corporation
ENGINEERS & SURVEYORS

JOB = 2564.4	DESIGNED - CGF	REVISED -	
FILE NAME = D570024-sht-staging.dgn	DRAWN - CGF	REVISED -	
PLOT SCALE = $SCALE$	CHECKED - THF	REVISED -	
PLOT DATE = 6/18/2025	DATE - 2/12/2025	REVISED -	

STATE OF ILLINOIS
DEPARTMENT OF TRANSPORTATION

TRAFFIC CONTROL STAGING PLAN
PRE-STAGE C

SCALE: 1"=50' | SHEET OF SHEETS | STA. TO STA.

F.A. RTE.	SECTION	COUNTY	TOTAL SHEETS	SHEET NO.
72	(74-68VB)B	PIATT	93	27
		CONTRACT NO. 70024		
	ILLINOIS	FED. AID PROJECT		

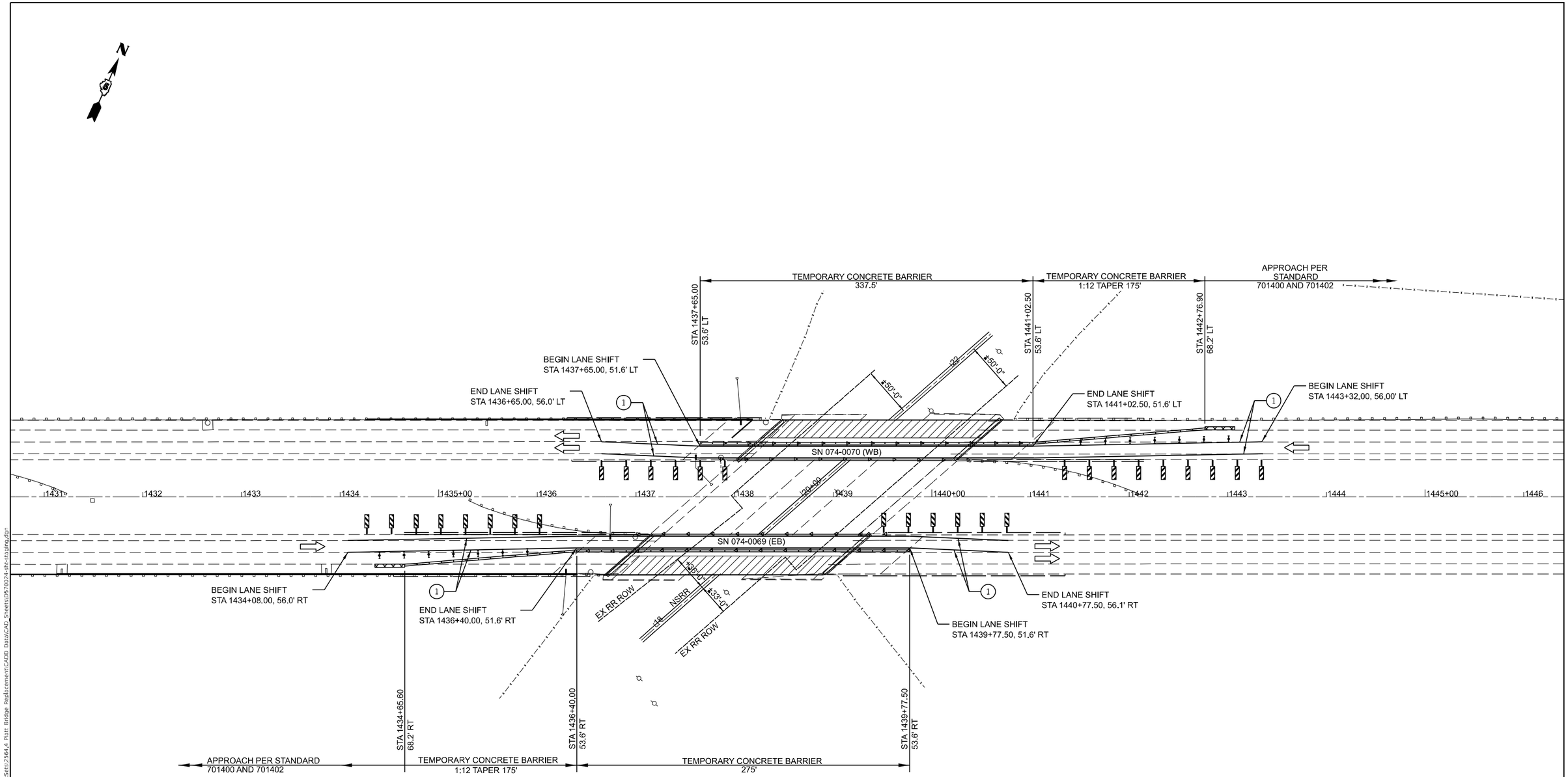

SEQUENCE OF OPERATIONS

PRE-STAGE D

1. INSTALL TEMPORARY CONCRETE BARRIER, TEMPORARY IMPACT ATTENUATORS, TEMPORARY PAVEMENT MARKINGS AND OTHER TRAFFIC CONTROL DEVICES AS SHOWN IN THE PLANS FOR PRE-STAGE D TRAFFIC.

2. REMOVE EXISTING HMA SURFACE, PERFORM FULL-DEPTH DECK PATCHING, REMOVE AND REPLACE EXPANSION JOINTS, PERFORM STEEL REPAIRS AND PLACE NEW HMA WEARING SURFACE ON OUTSIDE OF EACH STRUCTURE,

MAINTENANCE OF TRAFFIC NOTES

PRE-STAGE D

1. SEE TRAFFIC CONTROL AND PROTECTION STANDARDS 701400, 701401, 701402, AND 704001 FOR DETAILS NOT SHOWN.

2. ALL WORK WITHOUT TEMPORARY CONCRETE BARRIER SHALL BE IN ACCORDANCE WITH TRAFFIC CONTROL AND PROTECTION STANDARD 701401.

3. EXISTING PAVEMENT MARKINGS THAT CONFLICT WITH THE TEMPORARY PAVEMENT MARKINGS SHALL BE COVERED WITH PAVEMENT MARKING BLACKOUT TAPE, 5".

4. OFFSETS TO TEMPORARY CONCRETE BARRIER ARE TO THE FACE OF THE BARRIER ADJACENT TO THE OPEN TRAFFIC.

MODEL: Pre-Stage A-B-C-D [Sheet]
FILE NAME: H:\Support\IDOT_CONNECT\Configuration\WorkSpaces\IDOTCAD CONNECT\WorkSets\2564.4 Piatt Bridge Replacement\CADD Data\CAD Sheets\D570024-sht-staging.dgn

CEC Cummins Engineering Corporation ENGINEERS & SURVEYORS	JOB = 2564.4	DESIGNED - CGF	REVISED -	STATE OF ILLINOIS DEPARTMENT OF TRANSPORTATION	TRAFFIC CONTROL STAGING PLAN PRE-STAGE D	F.A. RTE.	SECTION	COUNTY	TOTAL SHEETS	SHEET NO.
	FILE NAME = D570024-sht-staging.dgn	DRAWN - CGF	REVISED -			72	(74-68VB)B	PIATT	93	28
	PLOT SCALE = $SCALE$	CHECKED - THF	REVISED -					CONTRACT NO. 70024		
	PLOT DATE = 6/18/2025	DATE - 2/12/2025	REVISED -		SCALE: 1"=50' SHEET OF SHEETS STA. TO STA.		ILLINOIS	FED. AID PROJECT		

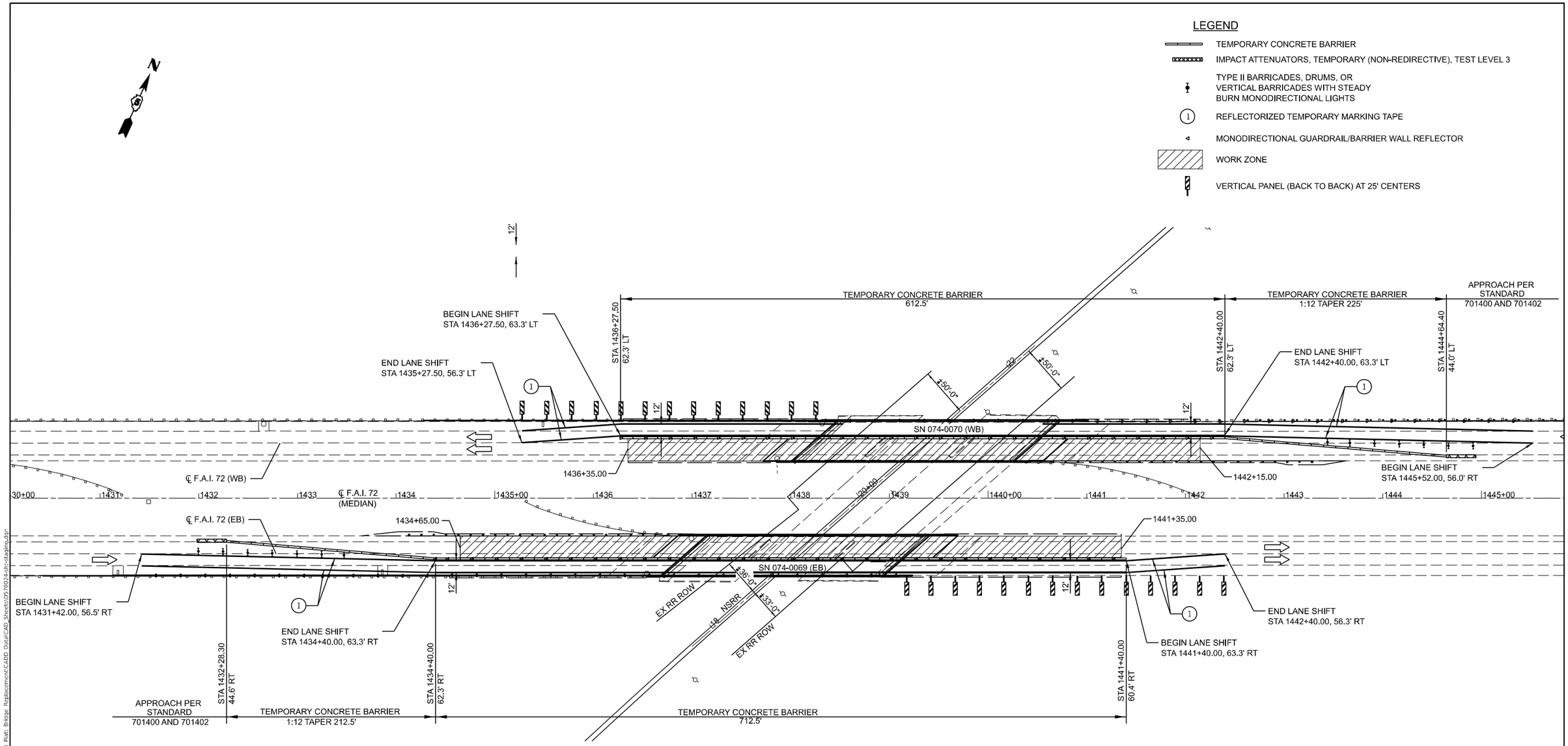

SEQUENCE OF OPERATIONS

STAGE 1

1. INSTALL TEMPORARY CONCRETE BARRIER, TEMPORARY IMPACT ATTENUATORS, TEMPORARY PAVEMENT MARKINGS AND OTHER TRAFFIC CONTROL DEVICES AS SHOWN IN THE PLANS FOR STAGE 1 TRAFFIC.
2. REMOVE STAGE 1 PORTION OF GUARDRAIL (MEDIAN).
3. REMOVE STAGE 1 PORTION OF THE EXISTING STRUCTURE AND PAVEMENT AND CONSTRUCT STAGE 1 PORTION OF THE PROPOSED DECK REPLACEMENT.
4. REMOVE HMA SHOULDERS FOR CONSTRUCTION OF PCC PAVEMENT CONNECTORS AND APPROACH SLABS (SEE SCHEDULE FOR LOCATIONS).
5. CONSTRUCT STAGE 1 PORTION OF ROADWAY ALONG THE OUTSIDE LANES INCLUDING HMA PAVEMENT, PAVEMENT CONNECTOR (PCC) FOR BRIDGE APPROACH SLAB, APPROACH SLABS, HMA SHOULDERS, AGGREGATE SHOULDERS, STEEL PLATE BEAM GUARDRAIL, AND TRAFFIC BARRIER TERMINALS.

MAINTENANCE OF TRAFFIC NOTES

1. SEE TRAFFIC CONTROL AND PROTECTION STANDARDS 701400, 701401, 701402, AND 704001 FOR DETAILS NOT SHOWN.
2. ALL WORK WITHOUT TEMPORARY CONCRETE BARRIER SHALL BE IN ACCORDANCE WITH TRAFFIC CONTROL AND PROTECTION STANDARD 701401.
3. EXISTING PAVEMENT MARKINGS THAT CONFLICT WITH THE TEMPORARY PAVEMENT MARKINGS SHALL BE COVERED WITH PAVEMENT MARKING BLACKOUT TAPE, 5".
4. OFFSETS TO TEMPORARY CONCRETE BARRIER ARE TO THE FACE OF THE BARRIER ADJACENT TO THE OPEN TRAFFIC LANE.
5. TEMPORARY CONCRETE BARRIER SHALL BE CONTINUOUSLY PINNED (SEE SCHEDULE FOR LOCATIONS)

MODEL: Stage 1 [Sheet]
FILE NAME: n:\Support\IDOT_CONNECT\Con guration\WorkSpaces\IDOT-CAD CONNECT\Work Sets\2564.4 Plat Bridge Replacement\CADD Data\CAD_Sheets\D570024-sht-staging.dgn

CEC Cummins Engineering Corporation ENGINEERS & SURVEYORS	JOB = 2564.4	DESIGNED - CDS	REVISED -	STATE OF ILLINOIS DEPARTMENT OF TRANSPORTATION	TRAFFIC CONTROL STAGING PLAN STAGE 1			F.A.I. RTE.	SECTION	COUNTY	TOTAL SHEETS / SHEET NO.
	FILE NAME = D570024-sht-staging.dgn	DRAWN - CDS	REVISED -					72	(74-68VB)B	PIATT	93 / 29
	PLOT SCALE = $SCALES	CHECKED - CGF	REVISED -							CONTRACT NO. 70024	
	PLOT DATE = 6/18/2025	DATE - 1/09/2025	REVISED -		SCALE: 1"=50'	SHEET OF SHEETS	STA. TO STA.		ILLINOIS	FED. AID PROJECT	

LEGEND

- TEMPORARY CONCRETE BARRIER
- IMPACT ATTENUATORS, TEMPORARY (NON-REDIRECTIVE), TEST LEVEL 3
- TYPE II BARRICADES, DRUMS, OR VERTICAL BARRICADES WITH STEADY BURN MONODIRECTIONAL LIGHTS
- (1) REFLECTORIZED TEMPORARY MARKING TAPE
- MONODIRECTIONAL GUARDRAIL/BARRIER WALL REFLECTOR
- WORK ZONE
- VERTICAL PANEL (BACK TO BACK) AT 25' CENTERS

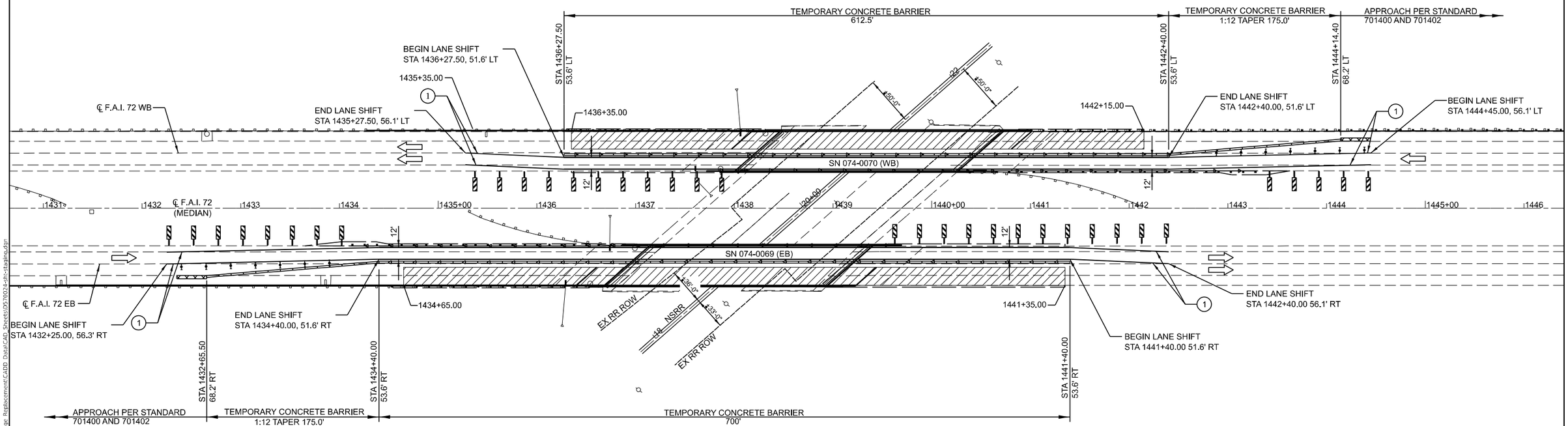

SEQUENCE OF OPERATIONS

STAGE 2

1. RELOCATE TEMPORARY CONCRETE BARRIER AND TEMPORARY IMPACT ATTENUATORS; INSTALL TEMPORARY PAVEMENT MARKINGS AND OTHER TRAFFIC CONTROL DEVICES AS SHOWN IN THE PLANS FOR STAGE 2 TRAFFIC.
2. REMOVE STAGE 2 PORTION OF GUARDRAIL (SEE SCHEDULE FOR LOCATIONS).
3. REMOVE AND REPLACE INLETS AND RECONNECT EXISTING PIPES (SEE SCHEDULE FOR STAGE 2 LOCATIONS).
4. REPLACE CURB ALONG PROPOSED SHOULDER TO ENSURE POSITIVE DRAINAGE (SEE SCHEDULE FOR STAGE 2 LOCATIONS).
5. REMOVE STAGE 2 PORTION OF THE EXISTING STRUCTURE AND PAVEMENT AND CONSTRUCT STAGE 2 PORTION OF THE PROPOSED DECK REPLACEMENT.
6. CONSTRUCT STAGE 2 PORTION OF ROADWAY ALONG THE OUTSIDE LANES INCLUDING HMA PAVEMENT, PAVEMENT CONNECTOR (PCC) FOR BRIDGE APPROACH SLAB, APPROACH SLABS, HMA SHOULDERS, AGGREGATE SHOULDERS, STEEL PLATE BEAM GUARDRAIL, AND TRAFFIC BARRIER TERMINALS.

FINAL PHASE

1. REMOVE STANDARD 701402 TRAFFIC CONTROL DEVICES, INSTALL SHORT-TERM PAVEMENT MARKINGS, AND INSTALL TRAFFIC CONTROL STANDARD 701401.
2. REPLACE INLETS UTILIZING HIGHWAY STANDARD 701401 AND RECONNECT EXISTING PIPES (SEE SCHEDULE FOR LOCATIONS).
3. INSTALL REMAINING GUARDRAIL (SEE SCHEDULE FOR LOCATIONS).
4. INSTALL REMAINING CONCRETE CURB (SEE SCHEDULE FOR LOCATIONS).
5. REMOVE TRAFFIC CONTROL DEVICES AND PLACE TRAFFIC IN PERMANENT LANES.
6. INSTALL PAVEMENT MARKINGS AND RAISED REFLECTIVE PAVEMENT MARKERS UTILIZING HIGHWAY STANDARD 701426.
7. INSTALL SHOULDER RUMBLE STRIPS ON ALL SHOULDERS (SEE SCHEDULE FOR LOCATIONS) UTILIZING HIGHWAY STANDARD 701426.

MAINTENANCE OF TRAFFIC NOTES

1. SEE TRAFFIC CONTROL AND PROTECTION STANDARDS 701400, 701401, 701402, AND 704001 FOR DETAILS NOT SHOWN.
2. ALL WORK WITHOUT TEMPORARY CONCRETE BARRIER SHALL BE IN ACCORDANCE WITH TRAFFIC CONTROL AND PROTECTION STANDARD 701401.
3. EXISTING PAVEMENT MARKINGS THAT CONFLICT WITH THE TEMPORARY PAVEMENT MARKINGS SHALL BE COVERED WITH PAVEMENT MARKING BLACKOUT TAPE, 5".
4. OFFSETS TO TEMPORARY CONCRETE BARRIER ARE TO THE FACE OF THE BARRIER ADJACENT TO THE OPEN TRAFFIC LANE.

MODEL: Stage 2 [Sheet]
FILE NAME: in:Support\IDOT_CONNECT\Con guration\WorkSpaces\IDOT-CAD CONNECT\WorkSets\2564.4 Plat: Bridge Replacement\CADD Data\CAD Sheets\D570024-sht-staging.dgn

CEC Cummins Engineering Corporation ENGINEERS & SURVEYORS	JOB = 2564.4	DESIGNED - CDS	REVISED -	STATE OF ILLINOIS DEPARTMENT OF TRANSPORTATION	TRAFFIC CONTROL STAGING PLAN STAGE 2	F.A.I. RTE.	SECTION	COUNTY	TOTAL SHEETS	SHEET NO.
	FILE NAME = D570024-sht-staging.dgn	DRAWN - CDS	REVISED -			72	(74-68VB)B	PIATT	93	30
	PLOT SCALE = 5SCALES	CHECKED - CGF	REVISED -					CONTRACT NO. 70024		
	PLOT DATE = 6/18/2025	DATE - 1/09/2025	REVISED -		SCALE: 1"=50' SHEET OF SHEETS STA. TO STA.		ILLINOIS	FED. AID PROJECT		

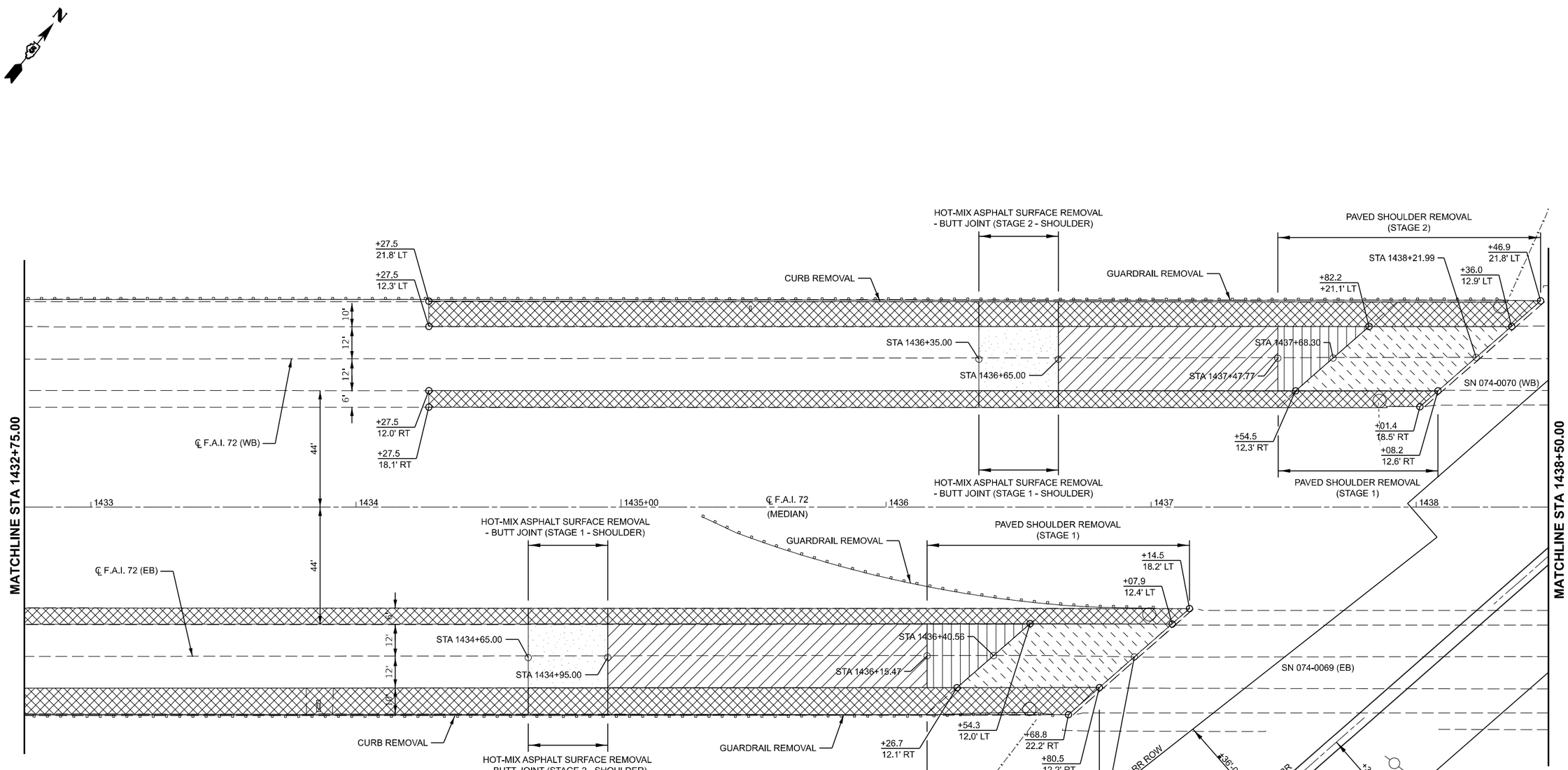

LEGEND

- APPROACH SLAB REMOVAL
- PAVED SHOULDER REMOVAL
- HOT-MIX ASPHALT SURFACE REMOVAL - BUTT JOINT
- HOT-MIX ASPHALT SURFACE REMOVAL, 1 1/2"
- PAVEMENT REMOVAL

NOTE: REMOVAL OFFSETS MEASURED ALONG EXISTING PAVEMENT LANE CENTERLINES

1. REMOVE OUTSIDE SHOULDER (PAVED SHOULDER REMOVAL) AND CONSTRUCT BASE COURSE (OPTION) (10½") (PRE-STAGE 1) PRIOR TO STARTING STAGE 1 CONSTRUCTION. A PORTION OF THE BASE COURSE (OPTION) CONSTRUCTED PRIOR TO STAGE 1 SHALL BE REMOVED IN STAGE 2 AND REPLACE PAVEMENT CONNECTOR (PCC) FOR BRIDGE APPROACH SLAB AND THE CONCRETE SUPERSTRUCTURE (APPROACH SLAB).

NOTE: REMOVAL OFFSETS MEASURED ALONG EXISTING PAVEMENT LANE CENTERLINES

MODEL: Removal Plans 1 [Sheet]
FILE NAME: H:\Support\IDOT_CONNECT\Con guration\WorkSpaces\IDOTcAD CONNECT\WorkSets\2564.4 Piatt Bridge Replacement\CADD Data\CAD Sheets\D570024-sht-removal.dgn

CEC Cummins Engineering Corporation — ENGINEERS & SURVEYORS	JOB = 2564.4	DESIGNED - CDS	REVISED -
	FILE NAME = D570024-sht-removal.dgn	DRAWN - CDS	REVISED -
	PLOT SCALE = 40.00000000 ' / in.	CHECKED - CGF	REVISED -
	PLOT DATE = 5/13/2024	DATE - 1/09/2025	REVISED -

STATE OF ILLINOIS
DEPARTMENT OF TRANSPORTATION

REMOVAL PLAN

SCALE: 1"=20' | SHEET OF SHEETS | STA. 1432+75.00 TO STA. 1438+50.00

F.A.I. RTE.	SECTION	COUNTY	TOTAL SHEETS	SHEET NO.
72	(74-68VB)B	PIATT	93	31

CONTRACT NO. 70024

ILLINOIS | FED. AID PROJECT

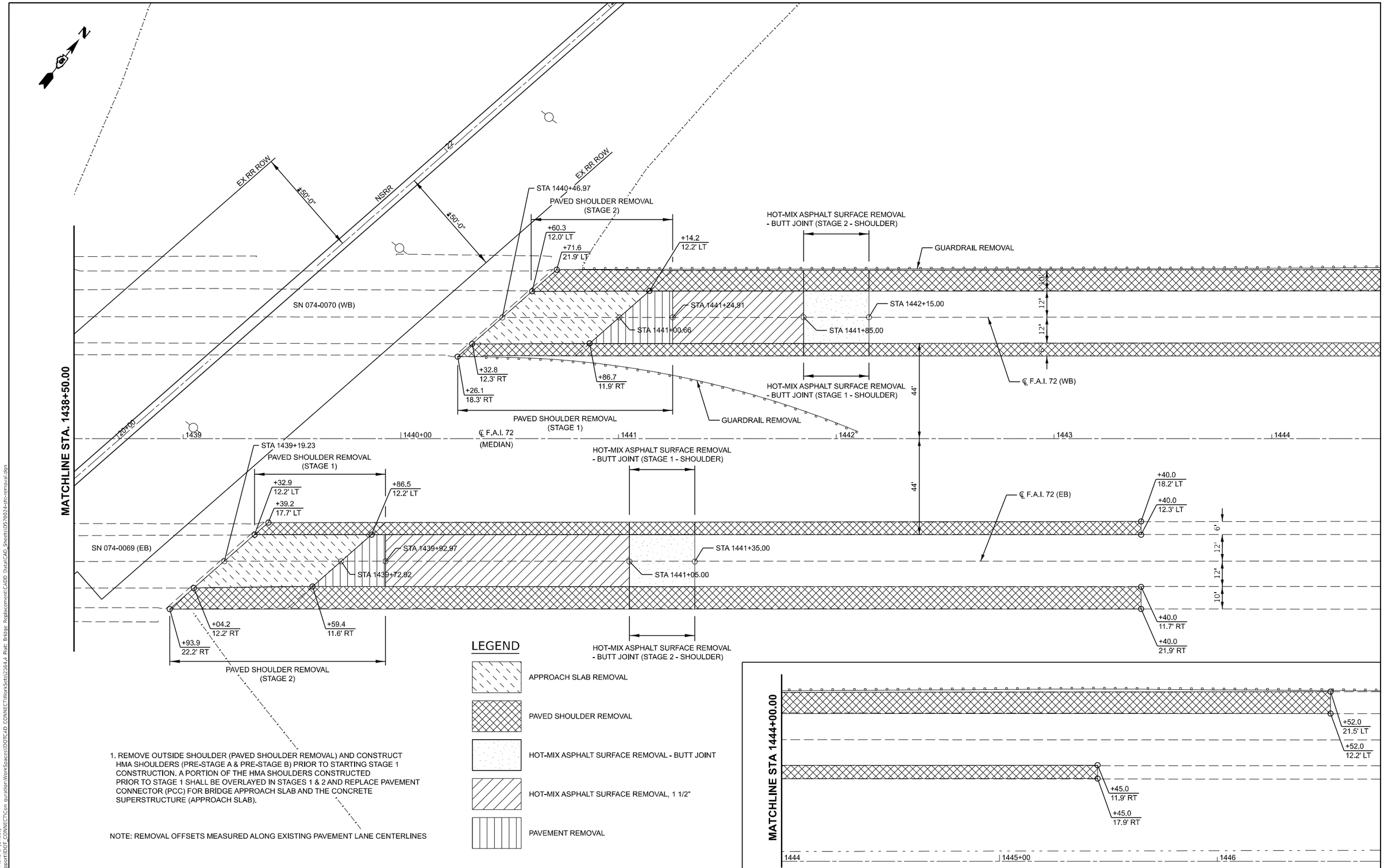

1. REMOVE OUTSIDE SHOULDER (PAVED SHOULDER REMOVAL) AND CONSTRUCT HMA SHOULDERS (PRE-STAGE A & PRE-STAGE B) PRIOR TO STARTING STAGE 1 CONSTRUCTION. A PORTION OF THE HMA SHOULDERS CONSTRUCTED PRIOR TO STAGE 1 SHALL BE OVERLAYED IN STAGES 1 & 2 AND REPLACE PAVEMENT CONNECTOR (PCC) FOR BRIDGE APPROACH SLAB AND THE CONCRETE SUPERSTRUCTURE (APPROACH SLAB).

NOTE: REMOVAL OFFSETS MEASURED ALONG EXISTING PAVEMENT LANE CENTERLINES

MODEL: Removal Plans 2 (Sheet)
FILE NAME: H:\Support\IDOT_CONNECT\Con guration\WorkSpaces\IDOTCAD CONNECT\WorkSets\2564.4 Plat- Bridge Replacement\CADD Data\CAD_Sheets\D570024-sht-removal.dgn

CEC Cummins Engineering Corporation — ENGINEERS & SURVEYORS	JOB = 2564.4	DESIGNED - CDS	REVISED -
	FILE NAME = D570024-sht-removal.dgn	DRAWN - CDS	REVISED -
	PLOT SCALE = 40.00000000 ' / in.	CHECKED - CGF	REVISED -
	PLOT DATE = 5/13/2024	DATE - 1/09/2025	REVISED -

STATE OF ILLINOIS
DEPARTMENT OF TRANSPORTATION

REMOVAL PLAN

SCALE: 1"=20' | SHEET OF SHEETS | STA. 1438+50.00 TO STA. 1444+50.00

F.A.I. RTE.	SECTION	COUNTY	TOTAL SHEETS	SHEET NO.
72	(74-68VB)B	PIATT	93	32

CONTRACT NO. 70024

ILLINOIS | FED. AID PROJECT

SEC 1, T18N, R5E, 3RD PM

LEGEND

A6	STEEL PLATE BEAM GUARDRAIL, TYPE A, 6 FOOT POSTS
1	TRAFFIC BARRIER TERMINAL, TYPE 1 (SPECIAL) TANGENT
6	TRAFFIC BARRIER TERMINAL, TYPE 6
LON	LENGTH OF NEED

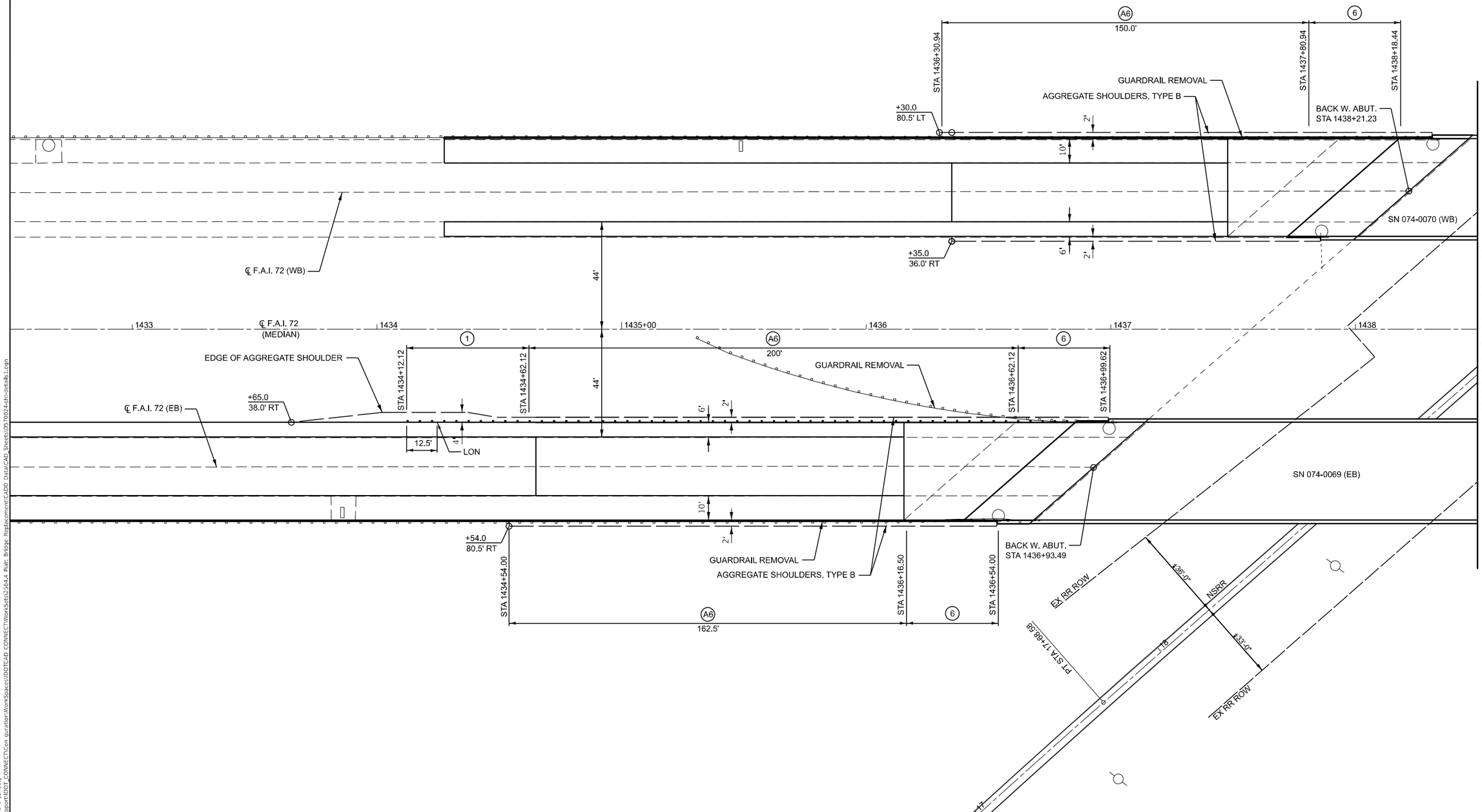

MODEL: GR Details 1 [Sheet]
FILE NAME: H:\Support\IDOT_CONNECT\Con guration\WorkSpaces\IDOT-CAD CONNECT\WorkSets\2564.4 Piatt Bridge Replacement\CADD Data\CAD Sheets\D570024-sht-details1.dgn

CEC Cummins Engineering Corporation — ENGINEERS & SURVEYORS	JOB = 2564.4	DESIGNED - CDS	REVISED -	STATE OF ILLINOIS DEPARTMENT OF TRANSPORTATION	GUARDRAIL PLAN
	FILE NAME = D570024-sht-details1.dgn	DRAWN - CDS	REVISED -		
	PLOT SCALE = $SCALES	CHECKED - CGF	REVISED -		
	PLOT DATE = 6/18/2025	DATE - 1/09/2025	REVISED -		SCALE: 1"=20' SHEET OF SHEETS STA. 1432+50.00 TO STA. 1438+50.00

F.A.I. RTE.	SECTION	COUNTY	TOTAL SHEETS	SHEET NO.
72	(74-68VB)B	PIATT	93	33
		CONTRACT NO. 70024		
	ILLINOIS	FED. AID PROJECT		

LEGEND

A6	STEEL PLATE BEAM GUARDRAIL, TYPE A, 6 FOOT POSTS
1	TRAFFIC BARRIER TERMINAL, TYPE 1 (SPECIAL) TANGENT
6	TRAFFIC BARRIER TERMINAL, TYPE 6
LON	LENGTH OF NEED

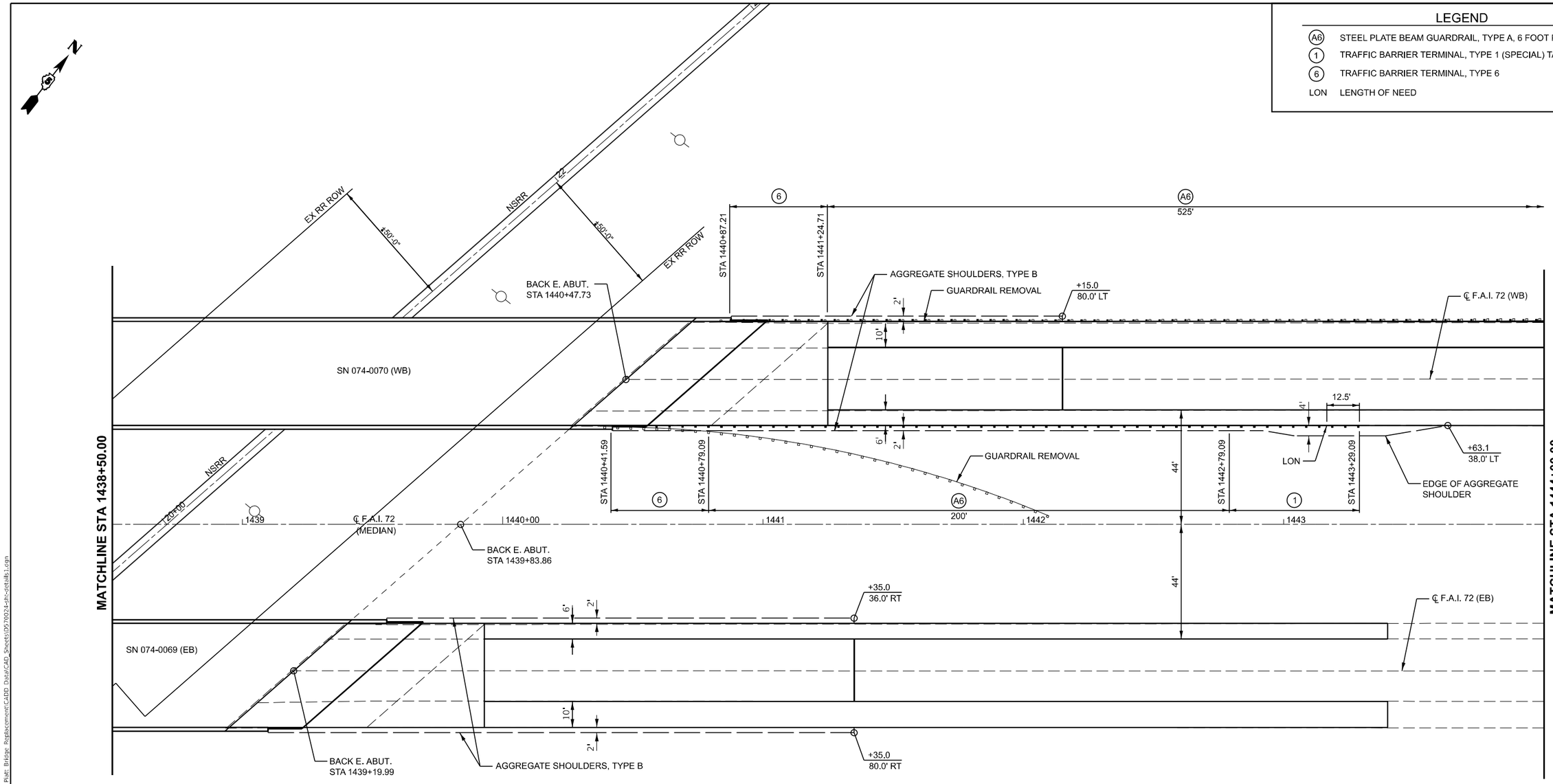

MODEL: GR Details 2 [Sheet]
FILE NAME: H:\Support\IDOT_CONNECT\Configuration\WorkSpaces\IDOT-CAD CONNECT\WorkSets\2564.4 Piatt Bridge Replacement\CADD Data\CAD_Sheets\D570024-sht-details1.dgn

CEC Cummins Engineering Corporation ENGINEERS & SURVEYORS	JOB = 2564.4	DESIGNED - CDS	REVISED -	STATE OF ILLINOIS DEPARTMENT OF TRANSPORTATION	GUARDRAIL PLAN			F.A.I. RTE.	SECTION	COUNTY	TOTAL SHEETS / SHEET NO.
	FILE NAME = D570024-sht-details1.dgn	DRAWN - CDS	REVISED -					72	(74-68VB)B	PIATT	93 / 34
	PLOT SCALE = $SCALES	CHECKED - CGF	REVISED -							CONTRACT NO. 70024	
	PLOT DATE = 6/18/2025	DATE - 1/09/2025	REVISED -		SCALE: 1"=20'	SHEET OF SHEETS	STA. 1438+50.00 TO STA. 1444+00.00			ILLINOIS FED. AID PROJECT	

LEGEND

A6	STEEL PLATE BEAM GUARDRAIL, TYPE A, 6 FOOT POSTS
1	TRAFFIC BARRIER TERMINAL, TYPE 1 (SPECIAL) TANGENT
6	TRAFFIC BARRIER TERMINAL, TYPE 6
LON	LENGTH OF NEED

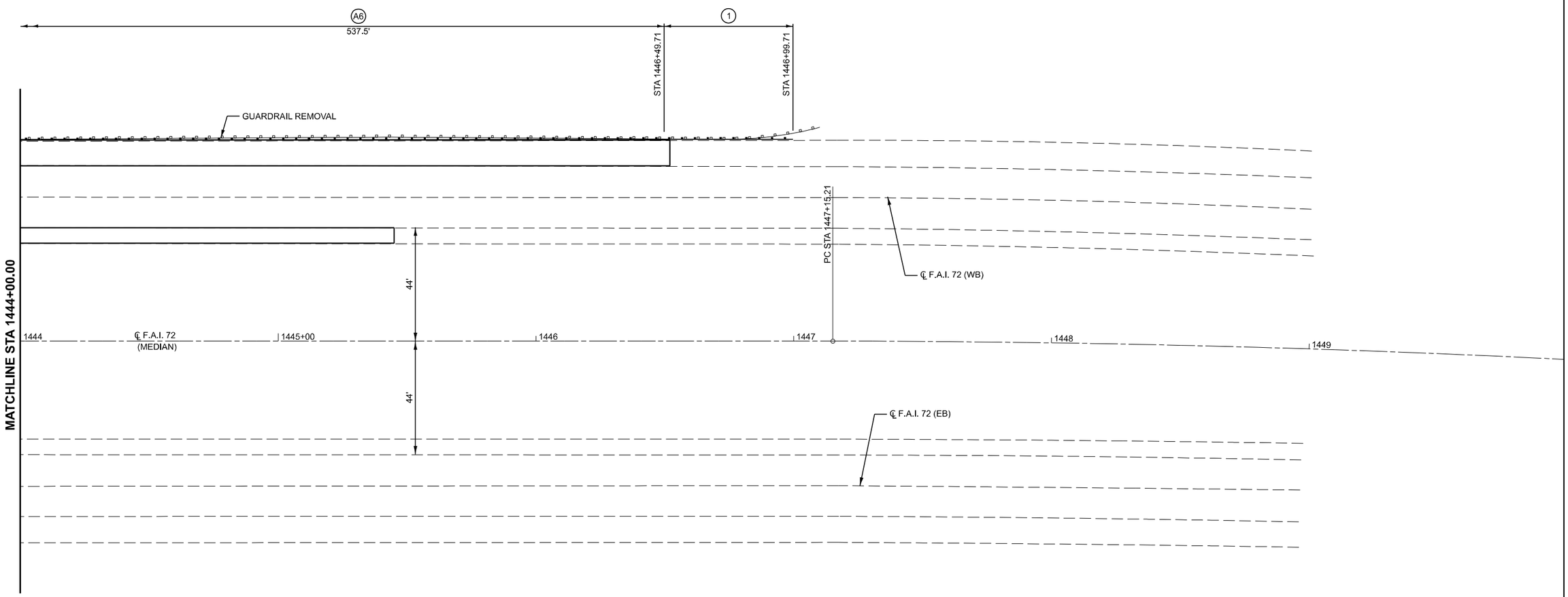

MODEL: GR Details 3 [Sheet]
FILE NAME: H:\Support\DOT_CONNECT\Con guration\WorkSpaces\DOTCAD CONNECT\WorkSets\2564.4 Piatt Bridge Replacement\CADD Data\CAD Sheets\D570024-sht-details1.dgn

CEC Cummins Engineering Corporation — ENGINEERS & SURVEYORS	JOB = 2564.4	DESIGNED - CDS	REVISED -	STATE OF ILLINOIS DEPARTMENT OF TRANSPORTATION	GUARDRAIL PLAN	F.A.I. RTE.	SECTION	COUNTY	TOTAL SHEETS	SHEET NO.
	FILE NAME = D570024-sht-details1.dgn	DRAWN - CDS	REVISED -			72	(74-68VB)B	PIATT	93	35
	PLOT SCALE = $SCALES	CHECKED - CGF	REVISED -					CONTRACT NO. 70024		
	PLOT DATE = 3/12/2025	DATE - 1/09/2025	REVISED -		SCALE: 1"=20' SHEET OF SHEETS STA. 1444+00.00 TO STA. 1450+00.00		ILLINOIS	FED. AID PROJECT		

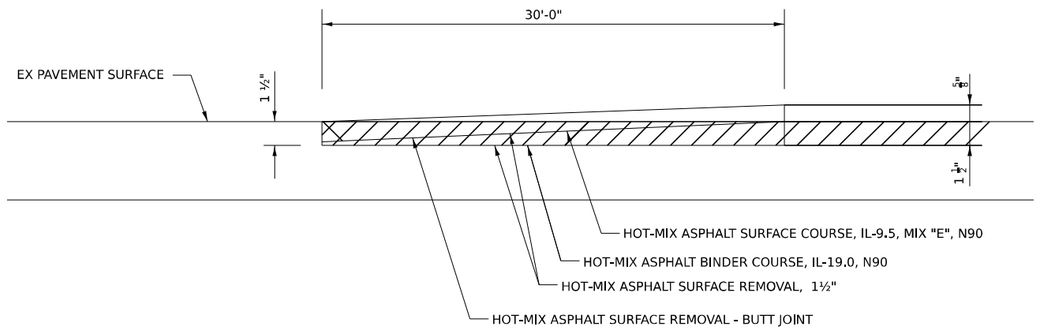

BUTT JOINT DETAIL
WB STA 1436+35.00 TO 1436+65.00

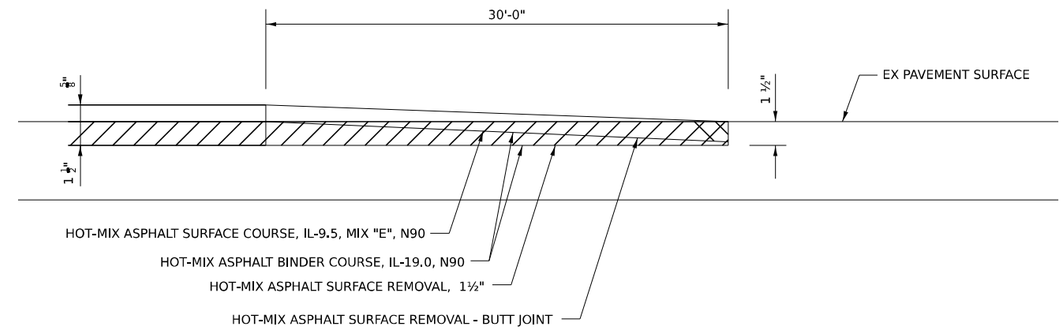

BUTT JOINT DETAIL
WB STA 1441+85.00 TO 1442+15.00

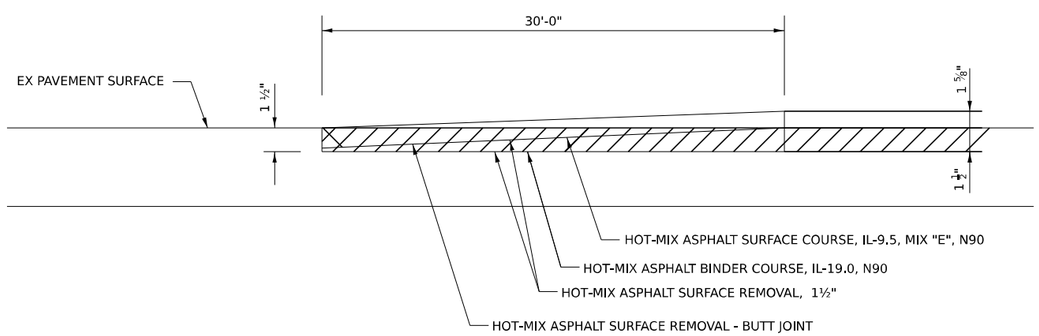

BUTT JOINT DETAIL
EB STA 1434+65.00 TO 1434+95.00

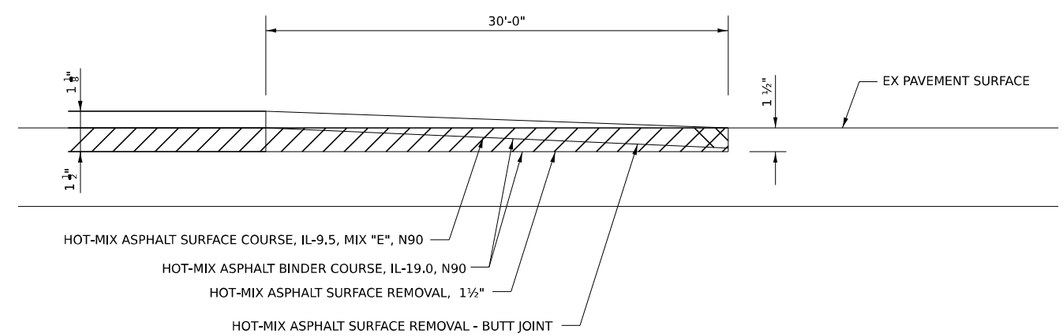

BUTT JOINT DETAIL
EB STA 1441+05.00 TO 1441+35.00

MODEL: Default
FILE NAME: H:\Support\IDOT_CONNECT\Configuration\WorkSpaces\IDOTCAD_CONNECT\WorkSets\2564.4 Piatt Bridge Replacement\CADD Data\CAD_Sheets\D570024-sht -details4.dgn

CEC Cummins Engineering Corporation — ENGINEERS & SURVEYORS	JOB = 2564.4	DESIGNED - CGF	REVISED -	STATE OF ILLINOIS DEPARTMENT OF TRANSPORTATION	BUTT JOINT DETAILS				F.A. RTE.	SECTION	COUNTY	TOTAL SHEETS	SHEET NO.
	FILE NAME = D570024-sht -details4.dgn	DRAWN - CGF	REVISED -						72	(74-68VB)B	PIATT	93	36
	PLOT SCALE = $SCALE$	CHECKED - CDS	REVISED -								CONTRACT NO. 70024		
	PLOT DATE = 3/12/2025	DATE - 2/18/2025	REVISED -		SCALE:	SHEET OF SHEETS	STA.	TO STA.		ILLINOIS	FED. AID PROJECT		

Benchmark: Chiseled square on top of NW wingwall on S.N. 074-0069 Sta. 1437+02.66, 37.32' Rt., Elev. 679.88

Existing Structures: S.N. 074-0069 and 074-0070 were originally constructed in 1975 as FAI-72, Section 74-68VB at Sta. 1438+70.61. The structures currently consist of three-span continuous plate girder superstructures with noncomposite concrete decks on concrete pile supported stub abutments and concrete pile supported multi-column piers. The clear deck width is 38'-6", face-to-face parapets is 40'-0"and out-to-out width is 42'-0". The structures are 226'-0" back-to-back of abutments and are skewed 48°45'19.5" left forward.

Traffic to be maintained using stage construction.

No salvage.

SCOPE OF WORK

1. Remove existing superstructure and approach slabs.
2. Remove portions of wingwalls and reconfigure abutments to semi-integral.
3. Construct new superstructure and approach slabs.
4. Repair existing piers as required.
5. Repair existing slopewall as required.

STA. 1438+70.61 RE-BUILT 20XX BY STATE OF ILLINOIS F.A.I. RT. 72 SEC (74-68VB)B LOADING HL-93 STR. NO. 074-0069	STA. 1438+70.61 RE-BUILT 20XX BY STATE OF ILLINOIS F.A.I. RT. 72 SEC (74-68VB)B LOADING HL-93 STR. NO. 074-0070

NAME PLATE

See Std. 515001

Existing Name Plates to be cleaned and relocated next to new Name Plates. Cost included with Name Plates.

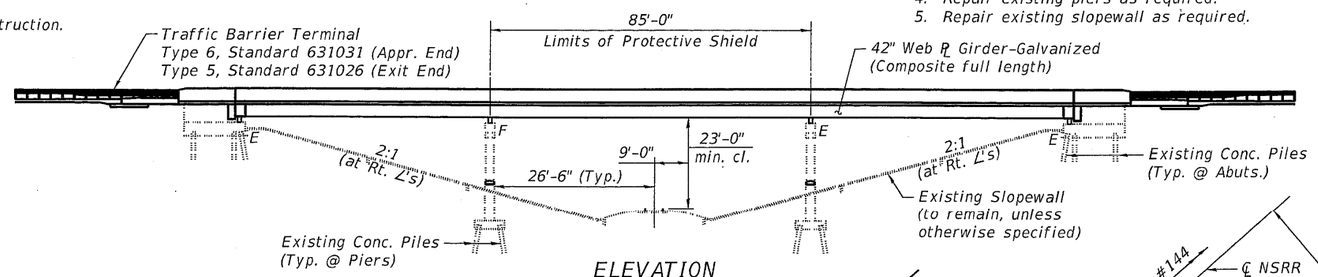

ELEVATION

DESIGN STRESSES

FIELD UNITS (New Construction)

f'c = 4,000 psi (Superstructure)
f'c = 3,500 psi (Substructure)
fy = 60,000 psi (Reinforcement)
fy = 50,000 psi (M270 Grade 50)

FIELD UNITS (Exist. Construction)

fc = 1,400 psi (Substructure)
fs = 20,000 psi (Reinforcement)

All structural steel shall be galvanized.

DESIGN SPECIFICATIONS

2020 AASHTO LRFD Bridge Design Specifications, 9th Edition
2006 Seismic Retrofitting Manual for Highway Structures: Part 1 Bridges (FHWA-HRT-06-032)

LOADING HL-93

Allow 50#/sq. ft. for future wearing surface.

SEISMIC DATA

Seismic Retrofit Category (SRC) = A
Design Spectral Acceleration at 1.0 sec (SD1) = 0.102g
Design Spectral Acceleration at 0.2 sec (SDS) = 0.192g
Soil Site Class = C
Performance Level = PL 1

Note: No freefall deck drains will be permitted in the span over the tracks or within 10 ft. of cross arms of a railroad pole line.

* Norfolk Southern Midwest Division MP C-144.08

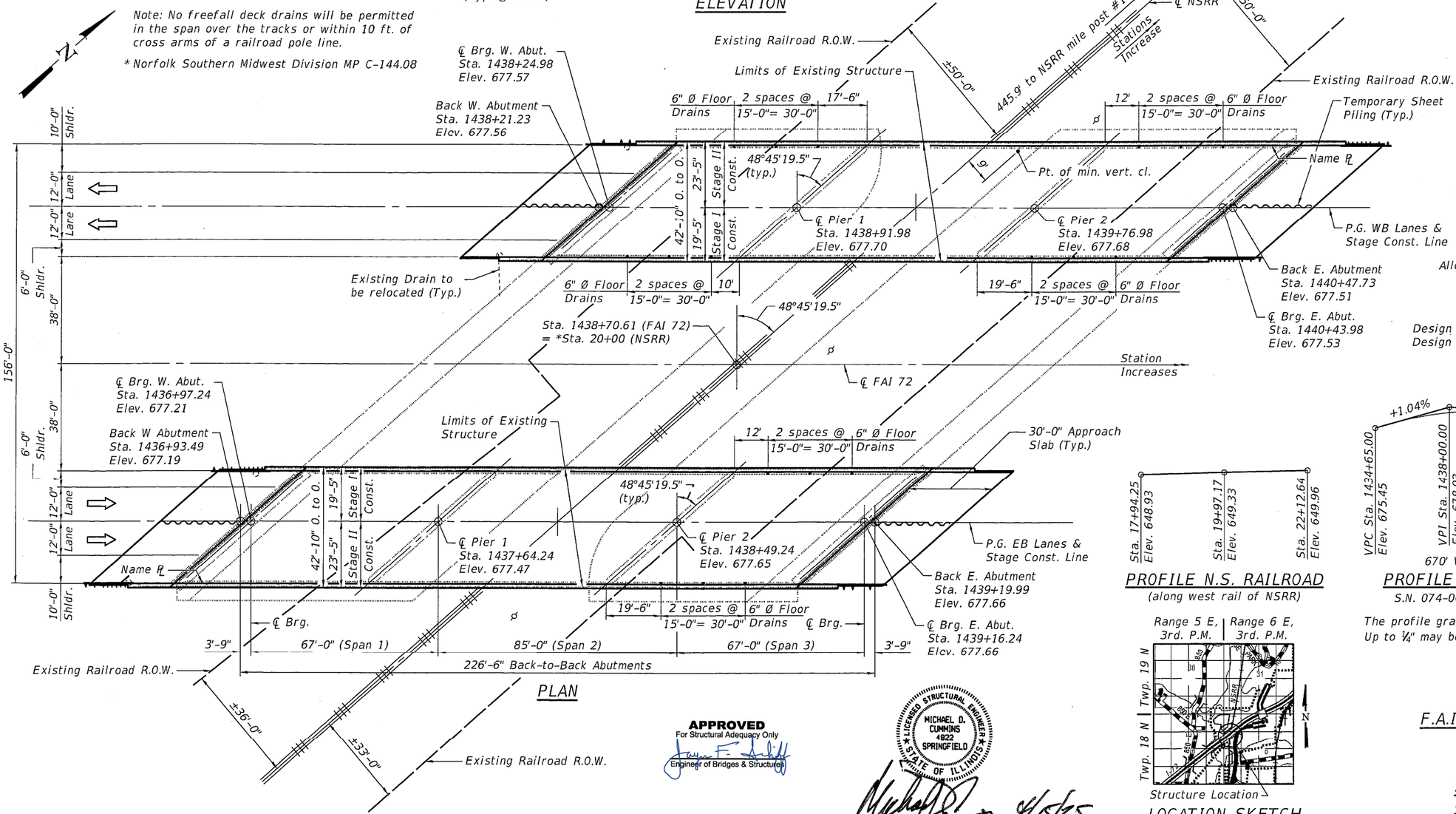

PLAN

PROFILE N.S. RAILROAD

(along west rail of NSRR)

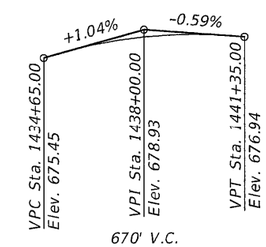

PROFILE GRADE

S.N. 074-0069 (EB)

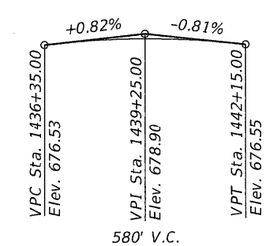

PROFILE GRADE

S.N. 074-0070 (WB)

The profile grade shows the final elevations after grinding. Up to ¼" may be ground off the bridge deck and approach slabs.

LOCATION SKETCH

APPROVED
For Structural Adequacy Only
Engineer of Bridges & Structures

LICENSED STRUCTURAL ENGINEER
MICHAEL D. CUMMINS
4822
SPRINGFIELD
STATE OF ILLINOIS

(Expires 11/30/26) 4/15/25

GENERAL PLAN & ELEVATION
I-72 OVER NSRR
F.A.I. ROUTE 72 - SECTION (74-68VB)B
PIATT COUNTY
STA 1438+70.61
STRUCTURE NO. 074-0069 (EB)
STRUCTURE NO. 074-0070 (WB)

| CEC Cummins Engineering Corporation
ENGINEERS & SURVEYORS | JOB = 2564.3
FILE = 0740069.0070-70024-001-GPE.dgn
DATE = 3/10/2025 | DESIGNED - AAN
CHECKED - MDC
DRAWN - TSH
CHECKED - MDC | REVISED -
REVISED -
REVISED -
REVISED - | STATE OF ILLINOIS
DEPARTMENT OF TRANSPORTATION | GENERAL PLAN
STRUCTURE NO. 074-0069 (EB) AND 074-0070 (WB)
SHEET NO. 1 OF 49 SHEETS |

F.A.I.	SECTION	COUNTY	TOTAL SHEETS	SHEET NO.
72	(74-68VB)B	PIATT	93	37
		CONTRACT NO. 70024		
	ILLINOIS FED. AID PROJECT			

GENERAL NOTES

1. Fasteners shall be ASTM F3125 Grade A325 Type 1. Fasteners shall be hot dip galvanized. See Special Provisions for "Hot Dip Galvanizing of Structural Steel". Bolts 7/8 in. diameter, holes 15/16 in. diameter, unless otherwise noted.
2. Calculated weight of Structural Steel = 413,350 Pounds. This quantity is for the pay item "Furnishing and Erecting Structural Steel" (L. Sum).
3. All structural steel shall be AASHTO M270 Grade 50 and shall be galvanized, unless otherwise noted. See Special Provisions for "Hot Dip Galvanizing for Structural Steel".
4. No field welding is permitted except as specified in the contract documents.
5. Reinforcement bars designated (E) shall be epoxy coated.
6. If the Contractor elects to use cantilever forming brackets on the exteroir beams or girders, the brackets shall be placed at the same locations as required for hardwood blocks in Article 503.06(b) of the Standard Specifications. If additional cantilever forming brackets are required, hardwood blocking shall be wedged between exterior and first interior beam at each of these additional bracket locations.
7. The concrete for bridge decks finished according to Article 503.16(a) of the Standard Specifications shall be placed and compacted parallel to the skew in uniform increments along centerline of the bridge. The machine used for finishing shall be set parallel to the skew for striking off and screeding the concrete.
8. Plan dimensions and details relative to the existing structure have been taken from existing plans are subject to nominal construction variations. The Contractor shall field verify existing dimensions and details affecting new construction and make necessary approved adjustments prior to construction or ordering of materials. Such variations shall not be cause for additional compensation for a change in scope of the work, however, the Contractor will be paid for the quantity actually furnished at the unit price bid for the work.
9. The existing structural steel coating contains lead. The Contractor shall take appropriate precautions to address the presence of lead on this project.
10. All drainage system componets shall extend to 2'-0" from the end of each wingwall except on outlet pipe shall extend until intersecting with the side slopes. the pipes shall drain into concrete headwalls. (See Article 601.05 of the Standard Specifications and Highway Standard 601101.)
11. The Railroad will be provided as-built drawings shoing the actual clearances as constructed. Depth, size, and location of all foundation components shall be shown on the drawings.
12. All work to be performed on, over, under or adjacent to the Railroad right-of-way shall comply with the Norfolk Southern Railway Company ("Railroad", "NSR" or "NS") Public Projects Manual (Appendix E, Special Provisions for the Protection of Railway Interests, and Appendix H1, Overhead Grade Separation Design Criteria). When in conflict with other project specifications, the most stringent one shall apply.
13. NSRR Contact Information:
    Jake Watson
    Senior Engineer Public Improvements
    Norfolk Southern Corporation
    650 Peachtree Street, NW, Box 45
    Atlanta, GA 30308
    470-463-6778 (O)
    jacob.watson@nscorp.com

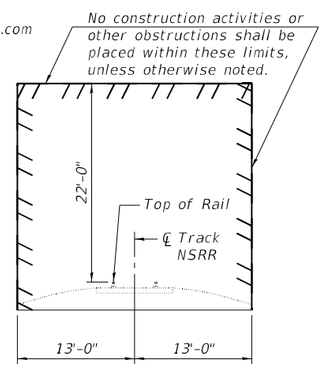

CONSTRUCTION CLEARANCE DIAGRAM

(Horiz. dim. @ Rt. ∠'s to ℄ track)
(2022 Norfolk Southern Public Improvements Manual)

TOTAL BILL OF MATERIAL

	ITEM	UNIT	SUPER	SUB	TOTAL
	Bituminous Materials (Tack Coat)	Pound	419		419
	Hot-Mix Ashpalt Surface Course, IL-9.5, Mix "D", N70	Ton	105		105
	Removal of Existing Superstructures No. 1	Each	1		1
	Removal of Existing Superstructures No. 2	Each	1		1
	Concrete Removal	Cu. Yd.	22.0	87.6	109.6
	Slope Wall Removal	Sq. Yd.		261	261
	Protective Shield	Sq. Yd.	794		794
	Structure Excavation	Cu. Yd.		623	623
	Floor Drains	Each	18		18
	Concrete Structures	Cu. Yd.		100.9	100.9
	Concrete Superstructure	Cu. Yd.	758.4		758.4
	Protective Coat	Sq. Yd.	2,992		2,992
	Concrete Superstructure (Approach Slab)	Cu. Yd.	238.0		238.0
	Furnishing and Erecting Structural Steel	L. Sum	1		1
*	Furnishing and Erecting Structural Steel	Pound	4,204		4,204
	Stud Shear Connectors	Each	13,140		13,140
	Reinforcement Bars, Epoxy Coated	Pound	271,560	9,480	281,040
	Bar Splicers	Each	1,768	448	2,216
	Slope Wall 4 Inch	Sq. Yd.		261	261
	Name Plates	Each	2		2
	Preformed Joint Strip Seal	Foot	112		112
	Elastomeric Bearing Assembly, Type 1	Each	36		36
	Anchor Bolts, 1"	Each	48		48
	Anchor Bolts, 1 1/4"	Each	48		48
	Temporary Sheet Piling	Sq. Ft.		1,545	1,545
	Granular Backfill for Structures	Cu. Yd.		623	623
	Concrete Sealer	Sq. Ft.		1,806	1,806
	Geocomposite Wall Drain	Sq. Yd.		228	228
	Pipe Underdrains for Structures, 4"	Foot		340	340
	Bridge Deck Grooving (Longitudinal)	Sq. Yd.	1,528		1,528
*	Structural Steel Removal	Pound	4,204		4,204
*	Structural Steel Repair	Pound	1,552		1,552
	Bar Terminators	Each	484		484
	HMA Surface Removal (Deck)	Sq. Yd.	948		948
	Structural Repair of Concrete (Depth Equal to or Less Than 5 Inches)	Sq. Ft.		247	247
	Structural Repair of Concrete (Depth Greater Than 5 Inches)	Sq. Ft.		38	38
	Deck Slab Repair (Full Depth, Type II)	Sq. Yd.	225		225
	Deck Slab Repair (Partial)	Sq. Yd.	74		74
	Diamond Grinding (Bridge Section)	Sq. Yd.	2,268		2,268
	Rock Fill - Embankment	Cu. Yd.		174	174

* Quantities have been separated for Pre-Stage steel repairs

INDEX OF SHEETS

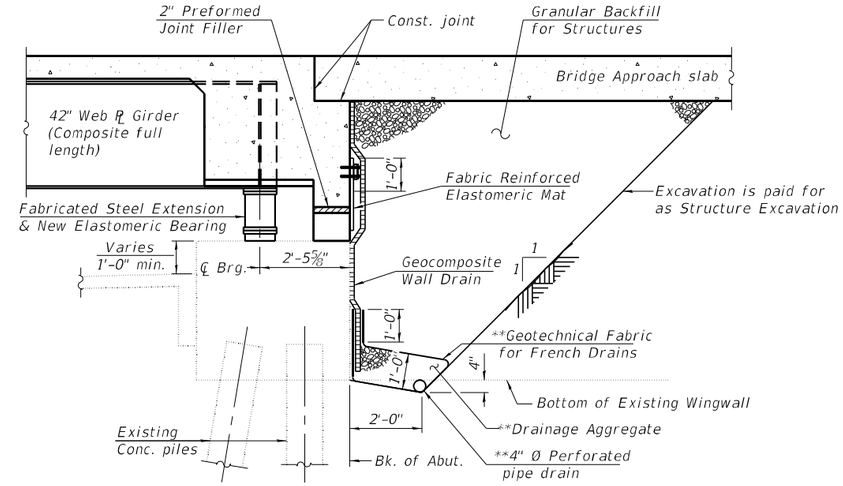

SECTION THRU SEMI-INTEGRAL ABUTMENT

(Horiz. dim. @ Rt. ∠'s)

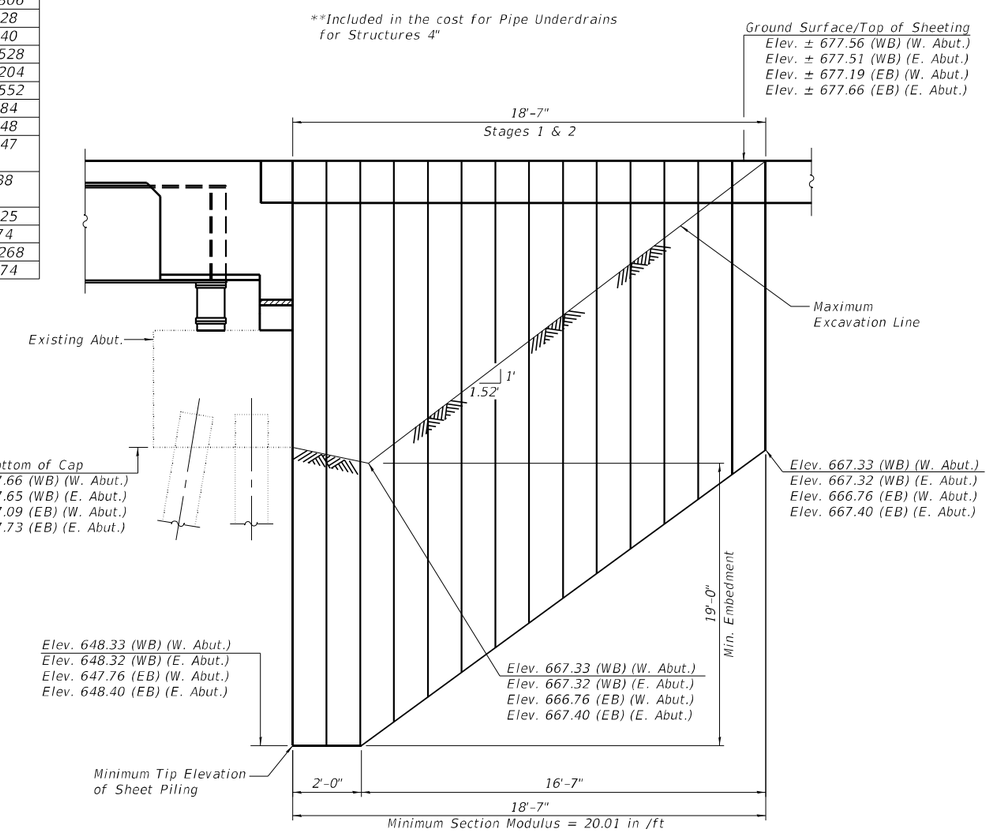

TEMPORARY SHEET PILING DETAILS

Notes:
If the Contractor chooses to alter the temporary cantilevered sheet piling design requirements shown on the plans, a design submittal including plan details and calculations will be required for review and acceptance by the Engineer.

Benchmark: Chiseled square on top of NW wingwall on S.N. 074-0069 Sta. 1437+02.66, 37.32' Rt., Elev. 679.88

Existing Structures: S.N. 074-0069 and 074-0070 were originally constructed in 1975 as FAI-72, Section 74-68VB at Sta. 1438+70.61. The structures currently consist of three-span continuous plate girder superstructures with noncomposite concrete decks on concrete pile supported stub abutments and concrete pile supported multi-column piers. The clear deck width is 38'-6", face-to-face parapets is 40'-0"and out-to-out width is 42'-0". The structures are 226'-0" back-to-back of abutments and are skewed 48°45'19.5" left forward.

Traffic to be maintained using stage construction.

No salvage.

SCOPE OF WORK

1. Remove existing superstructure and approach slabs.
2. Remove portions of wingwalls and reconfigure abutments to semi-integral.
3. Construct new superstructure and approach slabs.
4. Repair existing piers as required.
5. Repair existing slopewall as required.

STA. 1438+70.61 RE-BUILT 20XX BY STATE OF ILLINOIS F.A.I. RT. 72 SEC (74-68VB)B LOADING HL-93 STR. NO. 074-0069	STA. 1438+70.61 RE-BUILT 20XX BY STATE OF ILLINOIS F.A.I. RT. 72 SEC (74-68VB)B LOADING HL-93 STR. NO. 074-0070

NAME PLATE

See Std. 515001

Existing Name Plates to be cleaned and relocated next to new Name Plates. Cost included with Name Plates.

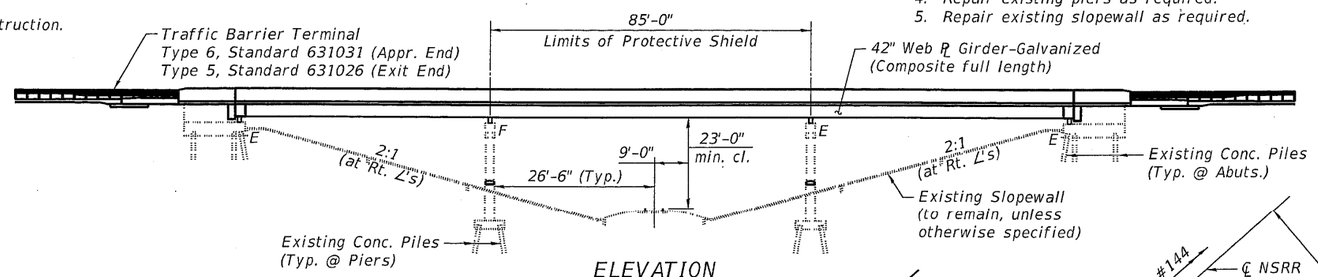

ELEVATION

DESIGN STRESSES

FIELD UNITS (New Construction)

f'c = 4,000 psi (Superstructure)
f'c = 3,500 psi (Substructure)
fy = 60,000 psi (Reinforcement)
fy = 50,000 psi (M270 Grade 50)

FIELD UNITS (Exist. Construction)

fc = 1,400 psi (Substructure)
fs = 20,000 psi (Reinforcement)

All structural steel shall be galvanized.

DESIGN SPECIFICATIONS

2020 AASHTO LRFD Bridge Design Specifications, 9th Edition
2006 Seismic Retrofitting Manual for Highway Structures: Part 1 Bridges (FHWA-HRT-06-032)

LOADING HL-93

Allow 50#/sq. ft. for future wearing surface.

SEISMIC DATA

Seismic Retrofit Category (SRC) = A
Design Spectral Acceleration at 1.0 sec (SD1) = 0.102g
Design Spectral Acceleration at 0.2 sec (SDS) = 0.192g
Soil Site Class = C
Performance Level = PL 1

Note: No freefall deck drains will be permitted in the span over the tracks or within 10 ft. of cross arms of a railroad pole line.

* Norfolk Southern Midwest Division MP C-144.08

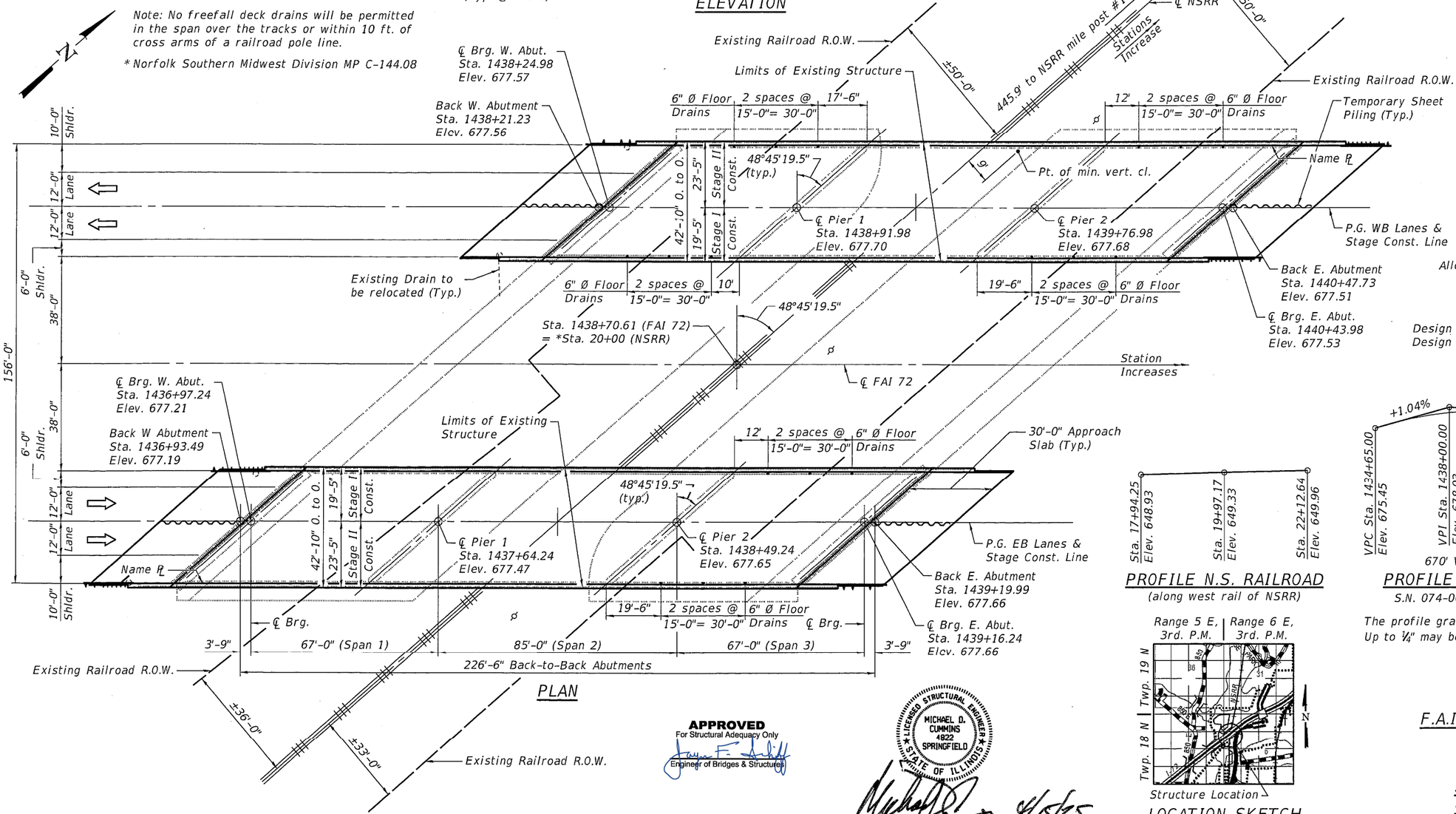

PLAN

PROFILE N.S. RAILROAD

(along west rail of NSRR)

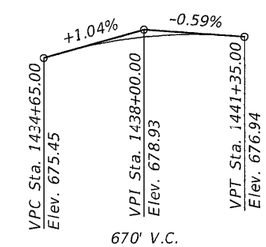

PROFILE GRADE

S.N. 074-0069 (EB)

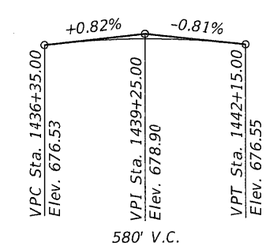

PROFILE GRADE

S.N. 074-0070 (WB)

The profile grade shows the final elevations after grinding. Up to ¼" may be ground off the bridge deck and approach slabs.

LOCATION SKETCH

APPROVED
For Structural Adequacy Only
Engineer of Bridges & Structures

LICENSED STRUCTURAL ENGINEER
MICHAEL D. CUMMINS
4822
SPRINGFIELD
STATE OF ILLINOIS

(Expires 11/30/26) 4/15/25

GENERAL PLAN & ELEVATION
I-72 OVER NSRR
F.A.I. ROUTE 72 - SECTION (74-68VB)B
PIATT COUNTY
STA 1438+70.61
STRUCTURE NO. 074-0069 (EB)
STRUCTURE NO. 074-0070 (WB)

| CEC Cummins Engineering Corporation
ENGINEERS & SURVEYORS | JOB = 2564.3
FILE = 0740069.0070-70024-001-GPE.dgn
DATE = 3/10/2025 | DESIGNED - AAN
CHECKED - MDC
DRAWN - TSH
CHECKED - MDC | REVISED -
REVISED -
REVISED -
REVISED - | STATE OF ILLINOIS
DEPARTMENT OF TRANSPORTATION | GENERAL PLAN
STRUCTURE NO. 074-0069 (EB) AND 074-0070 (WB)
SHEET NO. 1 OF 49 SHEETS |

F.A.I.	SECTION	COUNTY	TOTAL SHEETS	SHEET NO.
72	(74-68VB)B	PIATT	93	37
		CONTRACT NO. 70024		
	ILLINOIS FED. AID PROJECT			

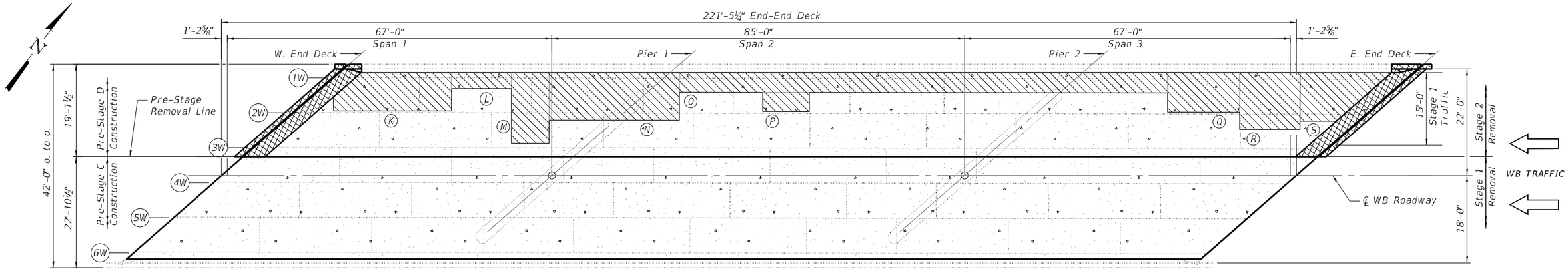

DECK PLAN
074-0070 (WB)

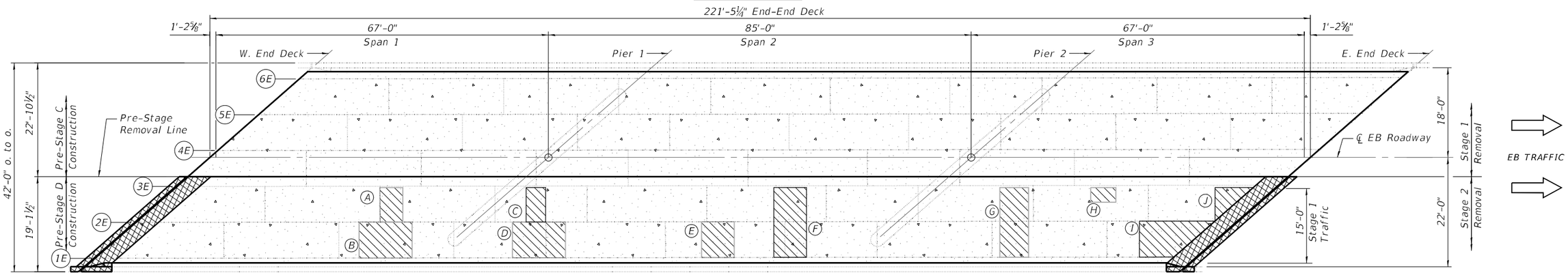

DECK PLAN
074-0069 (EB)

DECK SLAB REPAIR TABLE

Label	Size	Plan Qty. Deck Slab Repair (Partial Depth) Sq. Yd.	Plan Qty. Deck Slab Repair (FD, Type II) Sq. Yd.
A	4.6' x 7.2'		4
B	10.7' x 7.2'		9
C	3.9' x 7.2'		3
D	10.7' x 7.2'		9
E	6.5' x 7.2'		5
F	6.5' x 14.0'		10
G	5.7' x 14.0'		9
H	5.0' x 3.0'		2
I	11.6' x 7.2'		10
J	3.7' x 7.2'		3
K	24.0' x 7.2'		19
L	12.4' x 3.3'		5
M	7.8' x 15.0'		13
N	26.8' x 9.8'		29
O	100.0' x 4.0'		45
P	10.0' x 4.0'		5
Q	14.9' x 8.1'		14
R	12.4' x 11.7'		16
S	10.0' x 13.5'		15
	W.B. Deck Stage I	37	
	E.B. Deck Stage I	37	
	TOTAL	74	225

Notes:

Pre-Stage Removal & Construction Line for repairs = Stage Removal Line.

Deck survey performed on March 12, 2021. Locations and size shown in the plan view are approximate.

Longitudinal removal for Deck Slab Repair (Full-Depth, Type II) must be done in alternating sections of no more than 10 feet. Adjacent sections must not be removed until both of the following requirements are met:

1. At least 72 hours shall have elapsed from the end of the previous pour, and
2. The concrete shall have attained a minimum modulus of rupture of 675 psi or a minimum compressive strength of 4000 psi.

The Deck Slab Repair (Partial) Quantity has been estimated as 10% of the Stage 1 Traffic deck area.

Removal of existing HMA wearing surface shall be completed according the Special Provision for Deck Slab Repair.

LEGEND

- Deck Slab Repair (Full Depth)
- Concrete Removal and Concrete Superstructure
- HMA Surface Removal (Deck), HMA Surface Course and Bituminous Materials (Tack Coat)

BILL OF MATERIAL

ITEM	UNIT	TOTAL
Deck Slab Repair (Full Depth, Type II)	Sq. Yd.	225
Deck Slab Repair (Partial)	Sq. Yd.	74
HMA Surface Removal (Deck)	Sq. Yd.	948
Hot-Mix Asphalt Surface Course, IL-9.5, Mix "D", N70	Ton	105
Bituminous Materials (Tack Coat)	Pound	419

PRE-STAGE D CONSTRUCTION

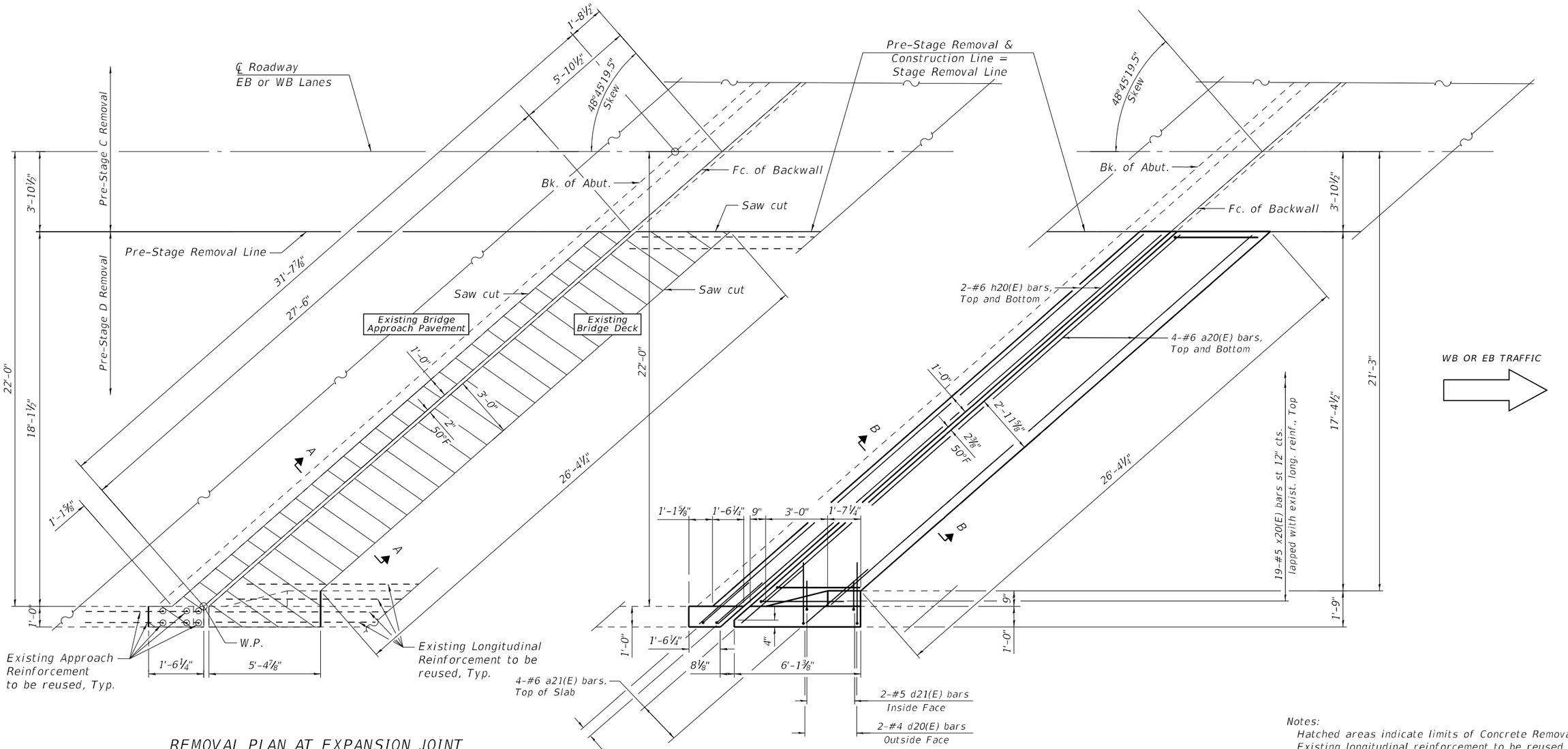

REMOVAL PLAN AT EXPANSION JOINT
WEST ABUTMENT (EB)
EAST ABUTMENT (WB)

PROPOSED PLAN AT EXPANSION JOINT
WEST ABUTMENT (EB)
EAST ABUTMENT (WB)

Notes:

Hatched areas indicate limits of Concrete Removal.

Existing longitudinal reinforcement to be reused shall be cleaned, straightened and incorporated into the new construction. Cost included with Concrete Removal.

Any reinforcement bars that are damaged during concrete removal shall be replaced with an approved bar splicer or anchorage system. Cost included with Concrete removal.

For Section A-A and B-B, see sheet 7 of 49. Dimensions are based on a Rolled Rail Strip Seal Joint. If the Contractor elects to use the Welded Rail Strip Seal Joint, deck dimensions may require adjustments to satisfy the details on Sheet 9 of 49.

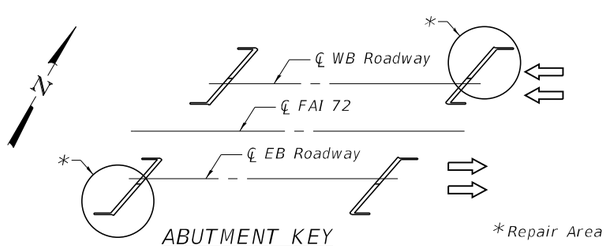

ABUTMENT KEY

*Repair Area

LEGEND

Concrete Removal

PRE-STAGE D CONSTRUCTION
PARTIAL DECK JOINT REPLACEMENTS
(SHEET 1 OF 5)

MODEL: Default
FILE NAME: 0740069_0070-70024-005_009-JointRepair.dgn

CEC Cummins Engineering Corporation — ENGINEERS & SURVEYORS	JOB = 2564.3	DESIGNED - AAN	REVISED -	STATE OF ILLINOIS DEPARTMENT OF TRANSPORTATION	PRE-STAGE DECK JOINT REPAIRS STRUCTURE NO. 074-0069 (EB) AND 074-0070 (WB)
	FILE NAME = 0740069_0070-70024-005_009-JointRepair.dgn	CHECKED - MDC	REVISED -		
	PLOT DATE = 4/8/2025	DRAWN - TSH	REVISED -		SHEET 5 OF 49 SHEETS
		CHECKED - MDC	REVISED -		

F.A.I. RTE.	SECTION	COUNTY	TOTAL SHEETS	SHEET NO.
72	(74-68VB)B	PIATT	93	41
		CONTRACT NO. 70024		
		ILLINOIS	FED. AID PROJECT	

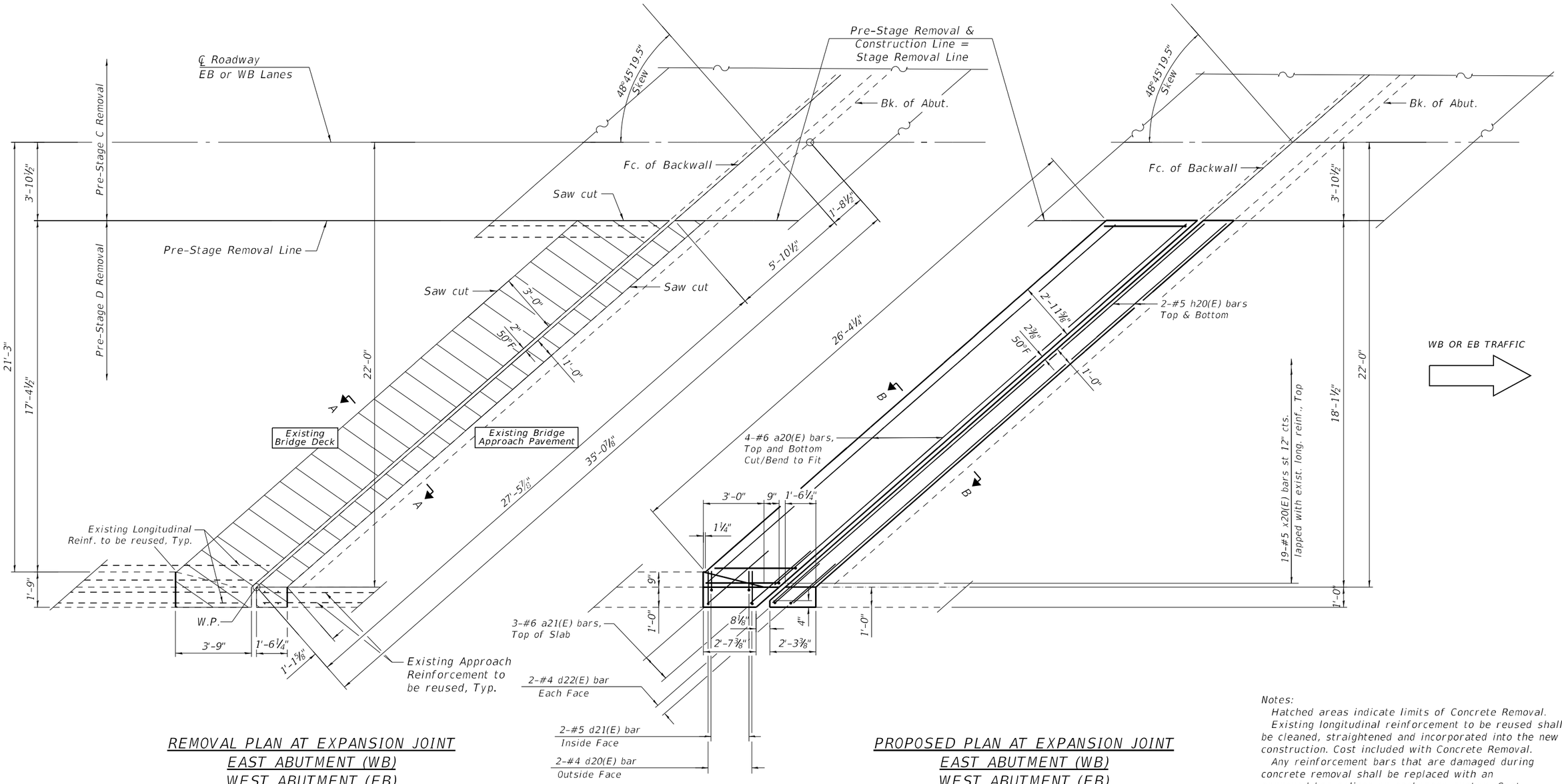

REMOVAL PLAN AT EXPANSION JOINT
EAST ABUTMENT (WB)
WEST ABUTMENT (EB)

PROPOSED PLAN AT EXPANSION JOINT
EAST ABUTMENT (WB)
WEST ABUTMENT (EB)

Notes:

Hatched areas indicate limits of Concrete Removal.

Existing longitudinal reinforcement to be reused shall be cleaned, straightened and incorporated into the new construction. Cost included with Concrete Removal.

Any reinforcement bars that are damaged during concrete removal shall be replaced with an approved bar splicer or anchorage system. Cost included with Concrete removal.

For Section A-A and B-B, see sheet 7 of 49.

Dimensions are based on a Rolled Rail Strip Seal Joint. If the Contractor elects to use the Welded Rail Strip Seal Joint, deck dimensions may require adjustments to satisfy the details on Sheet 9 of 49.

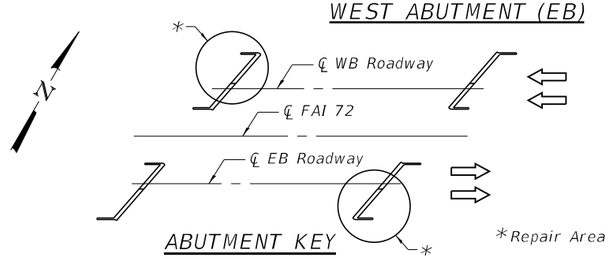

ABUTMENT KEY

LEGEND

Concrete Removal

PRE-STAGE D CONSTRUCTION
PARTIAL DECK JOINT REPLACEMENTS
(SHEET 2 OF 5)

MODEL: Default
FILE NAME: 0740069_0070-70024-005_009-JointRepair.dgn

CEC Cummins Engineering Corporation — ENGINEERS & SURVEYORS	JOB = 2564,3	DESIGNED - AAN	REVISED -	STATE OF ILLINOIS DEPARTMENT OF TRANSPORTATION	PRE-STAGE DECK JOINT REPAIRS STRUCTURE NO. 074-0069 (EB) AND 074-0070 (WB)
	FILE NAME = 0740069_0070-70024-005_009-JointRepair.dgn	CHECKED - MDC	REVISED -		
	PLOT DATE = 4/8/2025	DRAWN - TSH	REVISED -		SHEET 6 OF 49 SHEETS
		CHECKED - MDC	REVISED -		

F.A.I. RTE.	SECTION	COUNTY	TOTAL SHEETS	SHEET NO.
T2	(74-68VB)B	PIATT	93	42
		CONTRACT NO. 70024		
	ILLINOIS	FED. AID PROJECT		

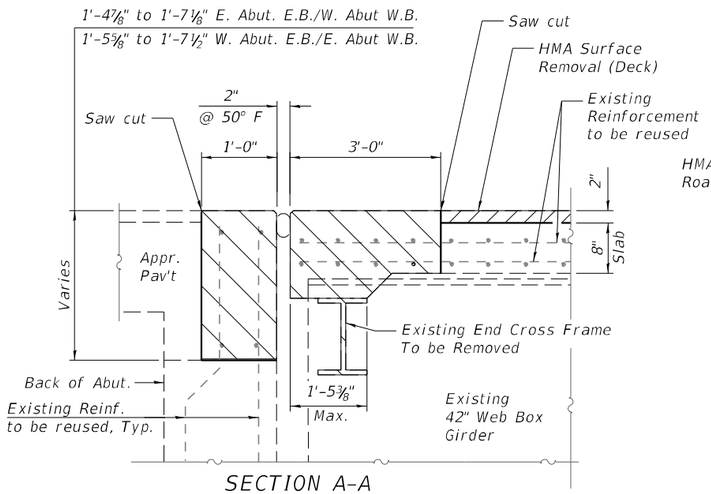

SECTION A-A

(Showing Removal)
(Horiz. Dim. at Rt. ℄s to end of deck)

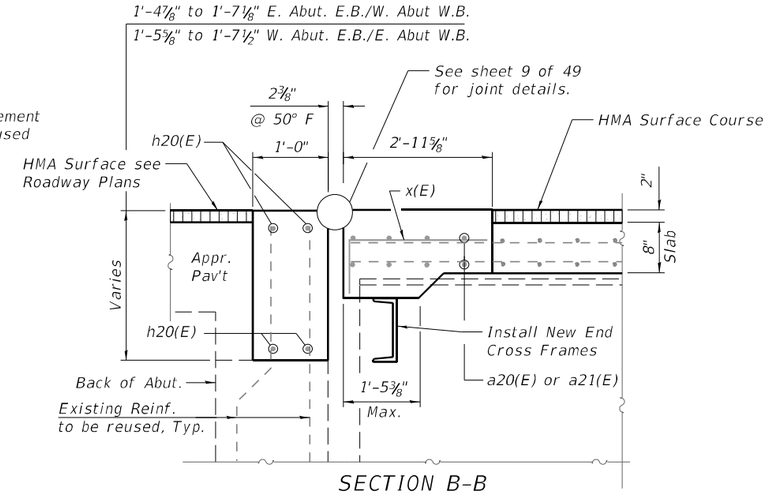

SECTION B-B

(Showing Proposed)
(Horiz. Dim. at Rt. ℄s to end of deck)

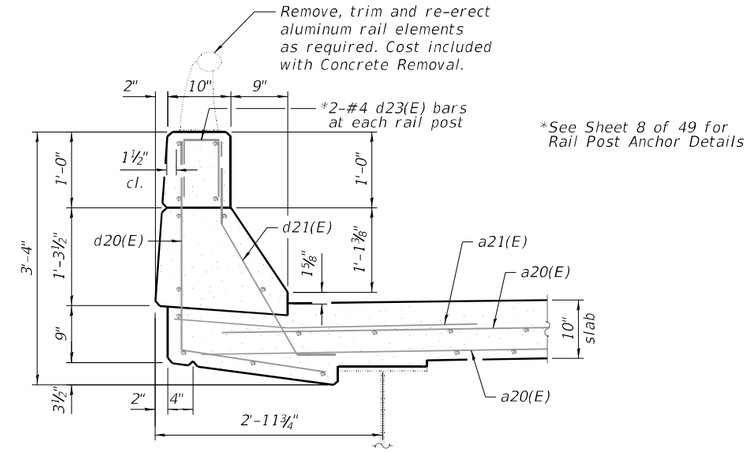

SECTION THRU DECK PARAPET

(Showing Proposed)

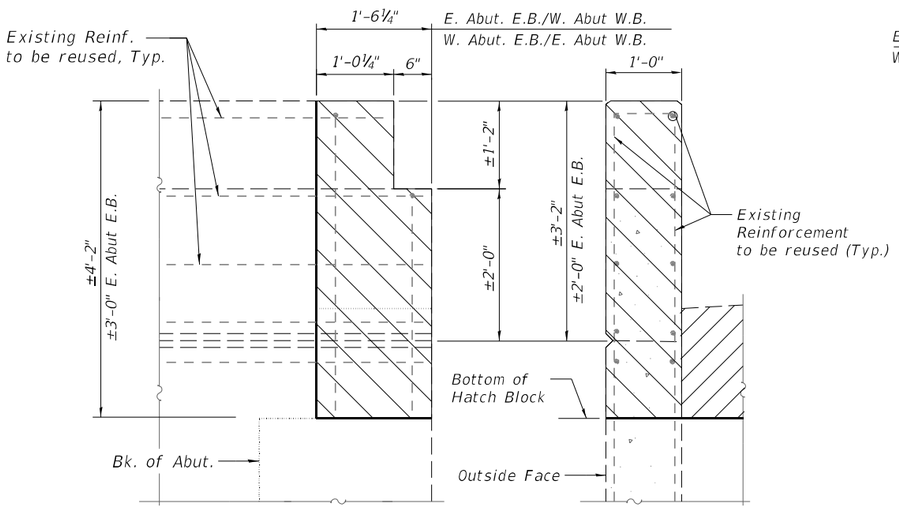

ELEVATION

SECTION THRU APPROACH PARAPET

(Typical at Four Corners, Except as shown)
(Showing Removal)

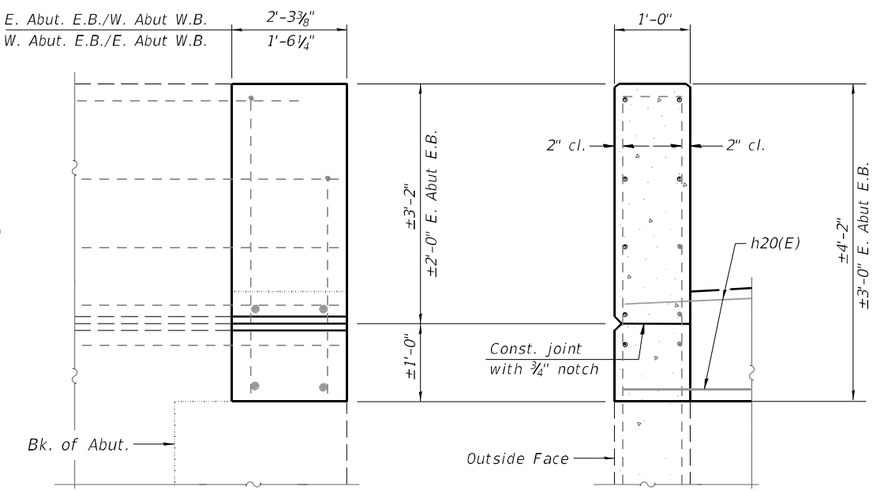

ELEVATION

SECTION THRU APPROACH PARAPET

(Typical at Four Corners, Except as shown)
(Showing Proposed)

SUPERSTRUCTURE REPAIRS BILL OF MATERIAL

Bar	No.	Size	Length	Shape
a20(E)	16	#6	27'-6"	
a21(E)	14	#6	4'-0"	
d20(E)	8	#4	4'-4"	
d21(E)	8	#5	3'-6"	
d22(E)	16	#5	3'-7"	
d23(E)	8	#4	2'-1"	
h20(E)	16	#6	28'-10"	
x20(E)	76	#5	4'-10"	
Reinforcement Bars, Epoxy Coated			Lbs.	1950
Concrete Removal			Cu. Yds.	22.0
Concrete Superstructure			Cu. Yds.	22.0

Notes:

Hatched areas indicate limits of Concrete Removal.

Existing longitudinal reinforcement to be reused shall be cleaned, straightened and incorporated into the new construction. Cost included with Concrete Removal.

Any reinforcement bars that are damaged during concrete removal shall be replaced with an approved bar splicer or anchorage system. Cost included with Concrete removal.

Dimensions are based on a Rolled Rail Strip Seal Joint. If the Contractor elects to use the Welded Rail Strip Seal Joint, deck dimensions may require adjustments to satisfy the details on Sheet 9 of 49.

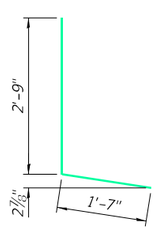

BAR d20(E)

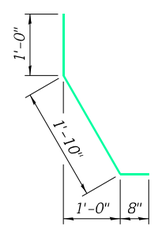

BAR d21(E)

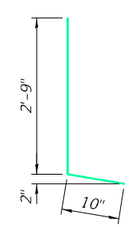

BAR d22(E)

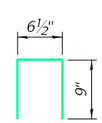

BAR d23(E)

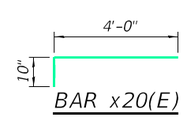

BAR x20(E)

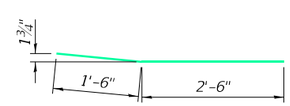

BAR a21(E)

LEGEND

- Concrete Removal
- HMA Surface Removal (Deck)
- HMA Surface Course

PRE-STAGE D CONSTRUCTION PARTIAL DECK JOINT REPLACEMENTS

(SHEET 3 OF 5)

MODEL: Default
FILE NAME: 0740069_0070-70024-005_009-JointRepair.dgn

CEC Cummins Engineering Corporation
ENGINEERS & SURVEYORS

JOB = 2564.3	DESIGNED - AAN	REVISED -	
FILE NAME = 0740069_0070-70024-005_009-JointRepair.DGN	CHECKED - MDC	REVISED -	
PLOT DATE = 4/8/2025	DRAWN - TSH	REVISED -	
	CHECKED - MDC	REVISED -	

STATE OF ILLINOIS
DEPARTMENT OF TRANSPORTATION

PRE-STAGE DECK JOINT REPAIRS
STRUCTURE NO. 074-0069 (EB) AND 074-0070 (WB)

SHEET 7 OF 49 SHEETS

F.A.I. RTE.	SECTION	COUNTY	TOTAL SHEETS	SHEET NO.
72	(74-68VB)B	PIATT	93	43

CONTRACT NO. 70024

ILLINOIS | FED. AID PROJECT

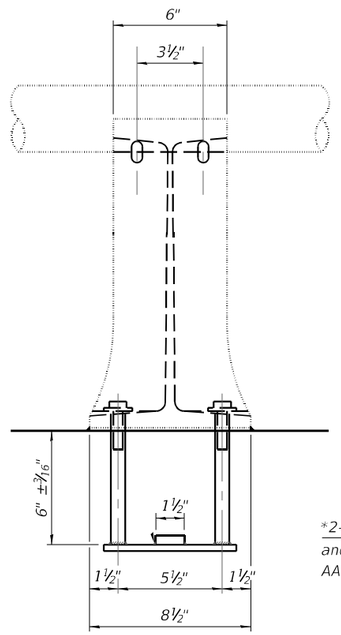

ELEVATION AT RAILPOST

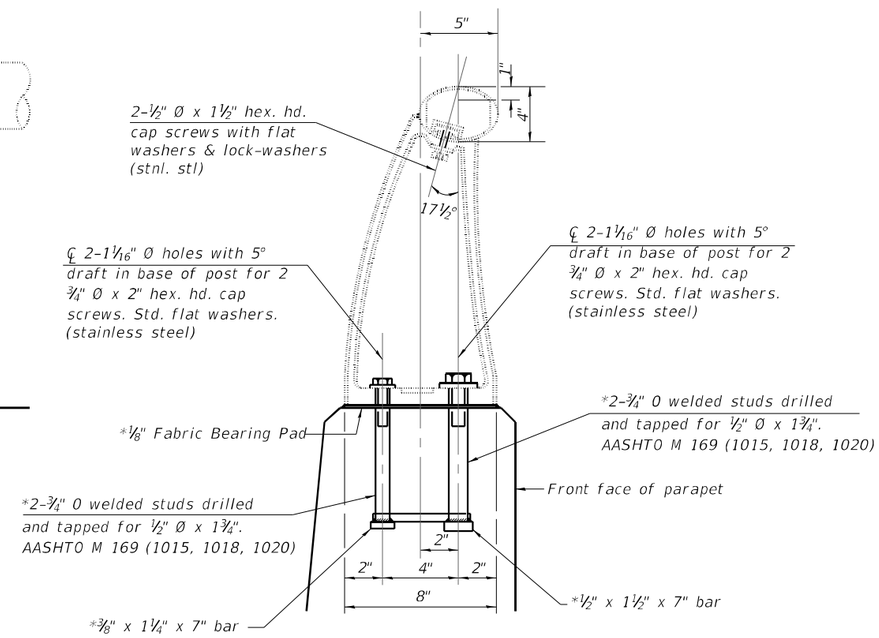

RAIL POST ANCHOR DETAILS

*New Rail Post anchorage devices will be required at each location where posts are connected to new construction. Cost included with Concrete Superstructure.

(1 Required - WB West End of Deck Parapet)
(1 Required - WB East End of Deck Parapet)
(1 Required - EB West End of Deck Parapet)
(1 Required - EB East End of Deck Parapet)

PRE-STAGE D CONSTRUCTION
RAIL POST ANCHOR DETAILS
(SHEET 4 OF 5)

MODEL: Default
FILE NAME: 0740069_0070-70024-005_009-JointRepair.dgn

CEC Cummins Engineering Corporation ENGINEERS & SURVEYORS	JOB = 2564.3	DESIGNED - AAN	REVISED -	STATE OF ILLINOIS DEPARTMENT OF TRANSPORTATION	PRE-STAGE DECK JOINT REPAIRS STRUCTURE NO. 074-0069 (EB) AND 074-0070 (WB)
	FILE NAME = 0740069_0070-70024-005_009-JointRepair.dgn	CHECKED - MDC	REVISED -		
	PLOT DATE = 4/8/2025	DRAWN - TSH	REVISED -		SHEET 8 OF 49 SHEETS
		CHECKED - MDC	REVISED -		

F.A.I. RTE.	SECTION	COUNTY	TOTAL SHEETS	SHEET NO.
72	(74-68VB)B	PIATT	93	44
		CONTRACT NO. 70024		
	ILLINOIS	FED. AID PROJECT		

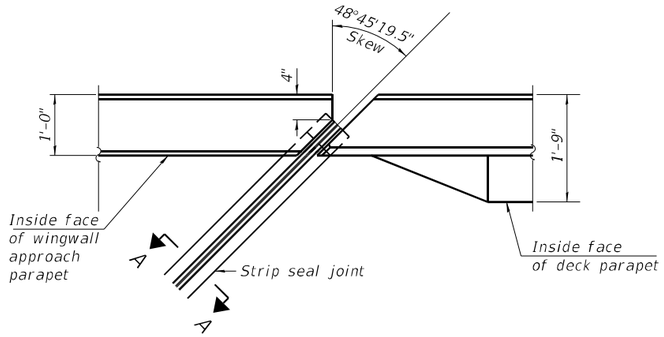

PLAN AT PARAPET

Point Block Detail at Parapet. See Sheet 5 & 6 for detail at slab.
Aluminum handrail not shown for clarity.

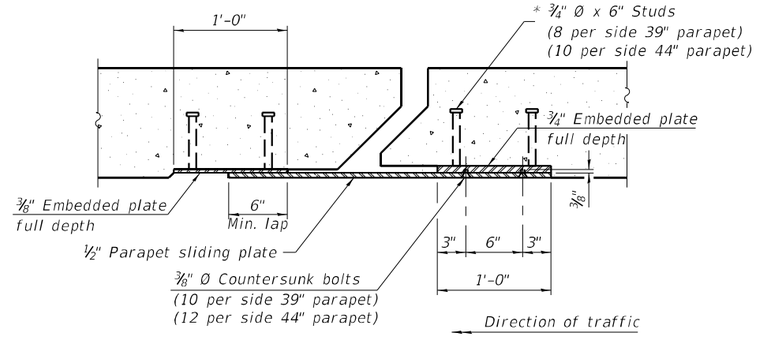

SECTION B-B

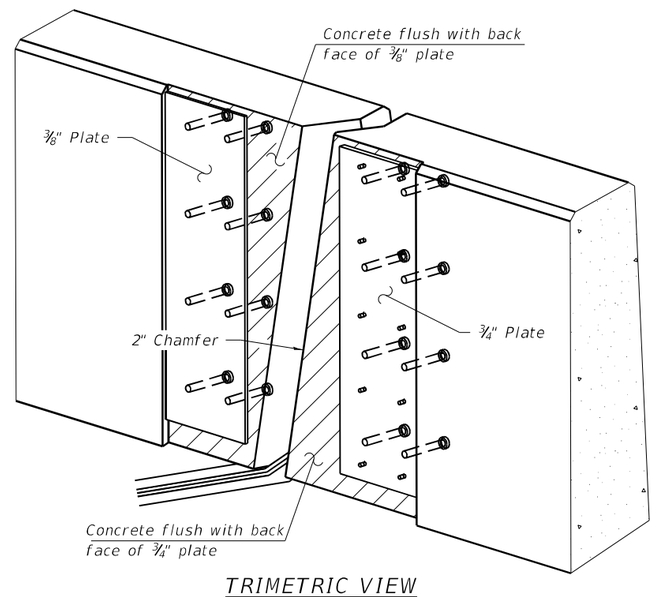

TRIMETRIC VIEW

(Showing embedded plates only)

*Granular or solid flux filled headed studs conforming to Article 1006.32 of the Std. Specs., automatically end welded.

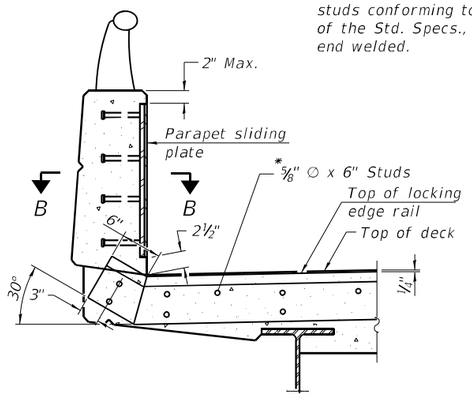

SECTION AT PARAPET

(Dim. @ Rt. ∡'s to parapet)

Notes:

The strip seal shall be made continuous and shall have a minimum thickness of ¼". The configuration of the strip seal shall match the configuration of the locking edge rails. Open or "webbed" strip seal gland configurations are not permitted. The gland shall be sized for a maximum rated movement of 4 inches.

The locking edge rails depicted are configured for typical applications and are conceptual only. The actual configuration of the locking edge rails and matching strip seal may vary from manufacturer to manufacturer provided they fit the application and meet the minimum anchorage shown. Flanged edge rails, however, will not be allowed. Locking edge rails may exceed the 4½" maximum depth provided the anchorage system is revised according to the manufacturer's recommendation.

The manufacturer's recommended installation methods shall be followed.

All steel components shall be galvanized after fabrication according to Article 520.03 of the Standard Specifications.

The Maximum space between locking edge rail segments shall be 3/16" and sealed with a suitable sealant; however, any rail joint within 10' measured perpendicular to the face of the curb or parapet shall be welded as shown in the locking edge rail splice detail.

Cost of parapet sliding plates, embedded plates, and anchorage studs included with Preformed Joint Strip Seal.

The concrete opening below the strip seal will vary based on the locking edge rail chosen by the Contractor. Deck and parapet lengths shown elsewhere in the plans are dimensioned to the concrete opening, not the joint opening, and are based on the rolled locking edge rail. If the Contractor elects to use a different locking edge rail, dimensional adjustments may be required. One exception to this would be the strip seal joint at the end of the precast bridge approach slab. For these cases the pavement connector length shall be adjusted, not the length of the bridge approach slab.

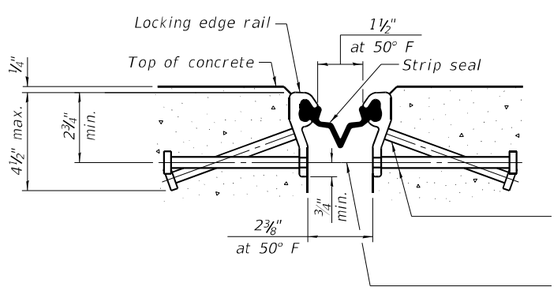

SHOWING ROLLED RAIL JOINT

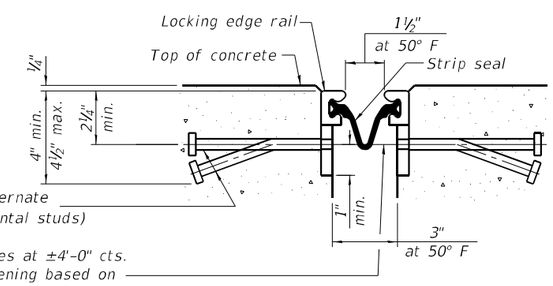

SHOWING WELDED RAIL JOINT

* ⅝" Ø x 6" studs @ 6" cts. (alternate angled/bent studs with horizontal studs)

⅜" ϕ threaded rods in 7/16" ϕ holes at ±4'-0" cts. for holding the proper joint opening based on the temperature during the deck pour. Place to miss studs. All rods shall be burned, or sawed off flush with the plates after concrete is set.

SECTION A-A

* Granular or solid flux filled headed studs conforming to Article 1006.32 of the Std. Specs., automatically end welded.

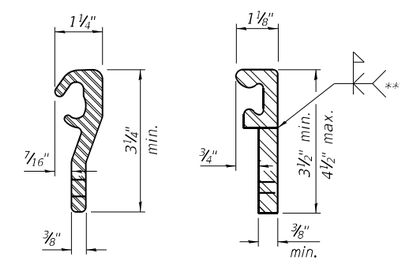

ROLLED (EXTRUDED) RAIL

WELDED RAIL

LOCKING EDGE RAILS

** Back gouge not required if complete joint penetration is verified by mock-up.

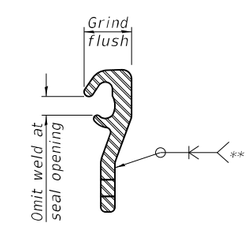

LOCKING EDGE RAIL SPLICE

The inside of the locking edge rail groove shall be free of weld residue. Rolled rail shown, welded rail similar.

BILL OF MATERIAL

Item	Unit	Total
Preformed Joint Strip Seal	Foot	112

PRE-STAGE D CONSTRUCTION PREFORMED STRIP SEAL

(SHEET 5 OF 5)

MODEL: Default
FILE NAME: 0740069_0070-70024-005_009-JointRepair.dgn

CEC Cummins Engineering Corporation
ENGINEERS & SURVEYORS

JOB = 2564.3	DESIGNED - AAN	REVISED -	
FILE NAME = 0740069_0070-70024-005_009-JointRepair.dgn	CHECKED - MDC	REVISED -	
PLOT DATE = 4/15/2025	DRAWN - TSH	REVISED -	
	CHECKED - MDC	REVISED -	

STATE OF ILLINOIS
DEPARTMENT OF TRANSPORTATION

PRE-STAGE DECK JOINT REPAIRS
STRUCTURE NO. 074-0069 (EB) AND 074-0070 (WB)

SHEET 9 OF 49 SHEETS

F.A.I. RTE.	SECTION	COUNTY	TOTAL SHEETS	SHEET NO.
T2	(74-68VB)B	PIATT	93	45
		CONTRACT NO. 70024		
	ILLINOIS	FED. AID PROJECT		

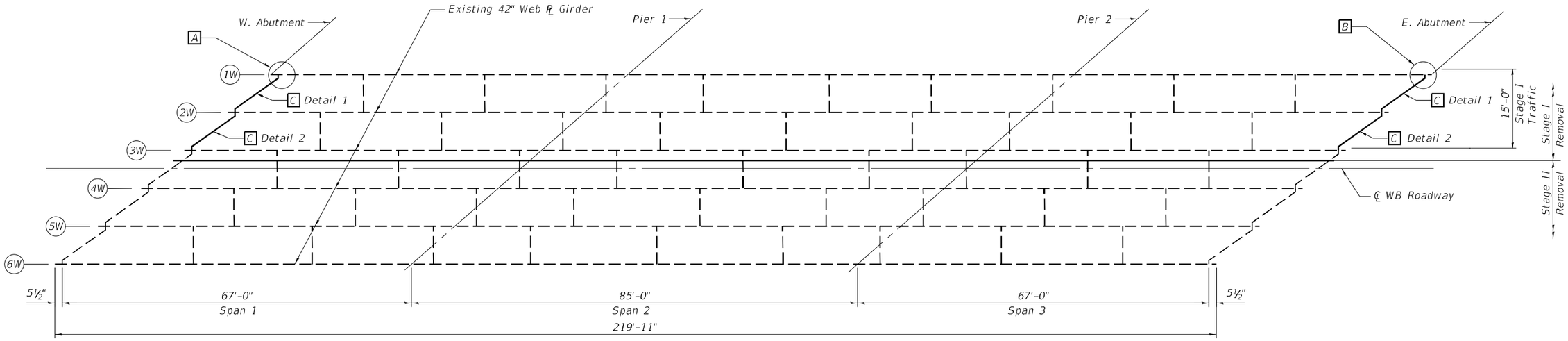

FRAMING PLAN
074-0070 (WB)

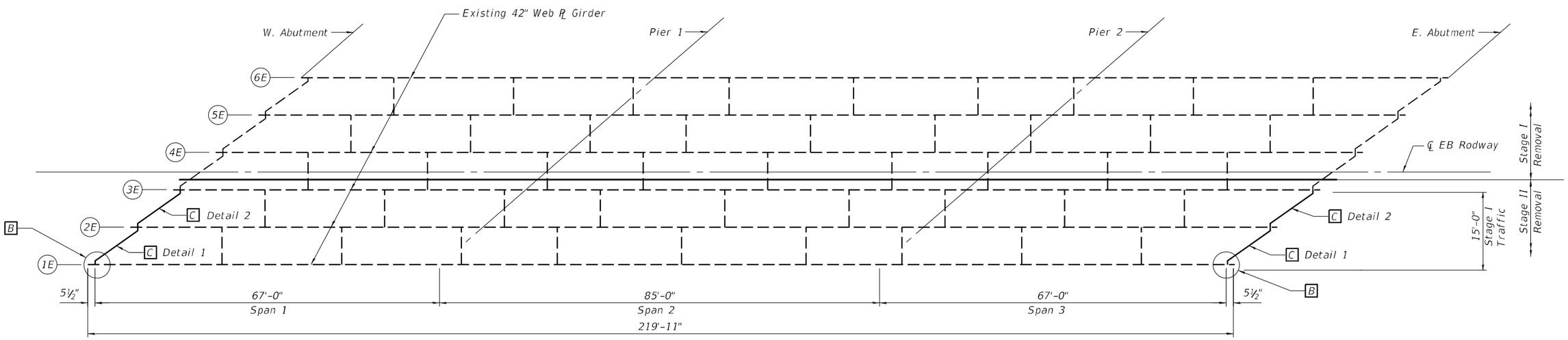

FRAMING PLAN
074-0069 (EB)

NOTES

All structural steel detailed on Sheets 10-13 of 49 shall conform to AASHTO M-270 Gr. 50.

All structural steel shall be shop painted with inorganic zinc rich primer per AASHTO M300, Type I. Cost included with Structural Steel Repairs or Furnishing and Erecting Structural Steel (Pound).

Fasteners shall be high strength bolts. Bolts ¾" ø, open holes 13/16" ø, unless otherwise noted.

Diaphragm connection holes shall be 15/16" ø holes for ¾" ø HS bolts. Two hardened washers shall be required at diaphragm connection PL's.

Existing structural steel that will be in contact with new structural steel shall be cleaned and painted prior to erection as required by the Special Provision "Cleaning and Painting Contact Surface Areas of Existing Steel Structures". Cleaning and painting of contact surfaces as detailed on Sheets 10-13 of 49 shall meet the requirements for Secondary Connections as specified in the Special Provision for "Cleaning and Painting Contact Surface Areas of Existing Steel Structures.

Cost of removal and re-installation of all members necessary to complete the work as detailed on the plans and as specified in the Special Provisions shall be included with Furnishing and Erecting Structural Steel.

Cost to remove existing wood blocking and cribbing is included with Structural Steel Repair.

LEGEND

A - Structural Steel Repair A

B - Structural Steel Repair B

C - Remove and replace end cross frame CF-1

BILL OF MATERIAL

ITEM	UNIT	TOTAL
Structural Steel Repair	Pound	1,552
Structural Steel Removal	Pound	4,204
Furnishing and Erecting Structural Steel	Pound	4,204

PRE-STAGE D CONSTRUCTION

(SHEET 1 OF 4)

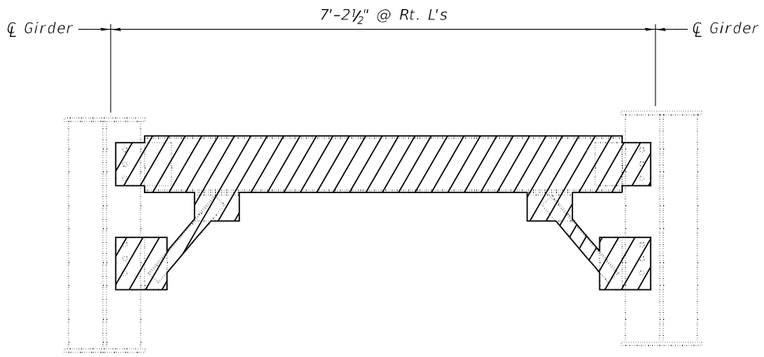

CROSS FRAME CF-1 (REMOVAL)

Hatched Area indicates limits of Structural Steel Removal.

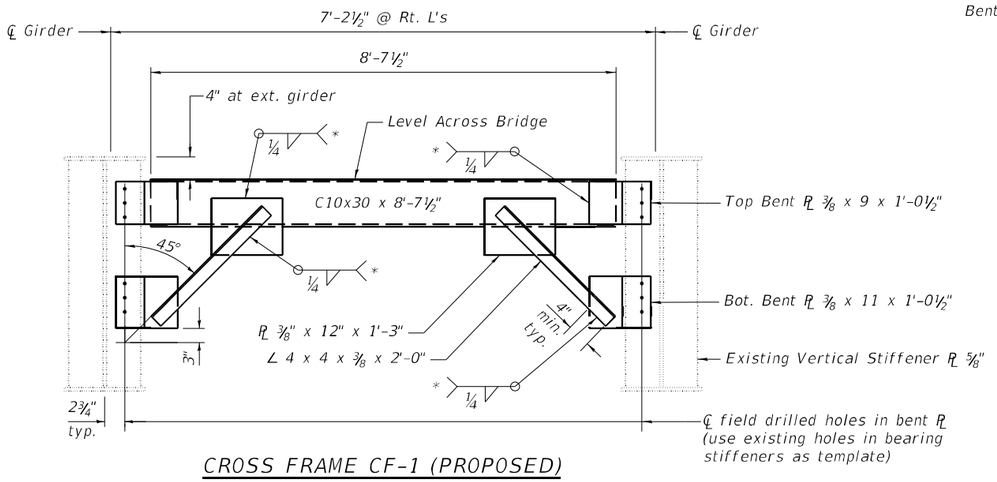

CROSS FRAME CF-1 (PROPOSED)

(Cost Included with Furnishing & Erecting Structural Steel)

Notes:
Two hardened washers required for each set of oversized holes.
Omit connection plates on exterior side of exterior girders.

* Fillet weld angles along 3 sides on one face of gusset plate.

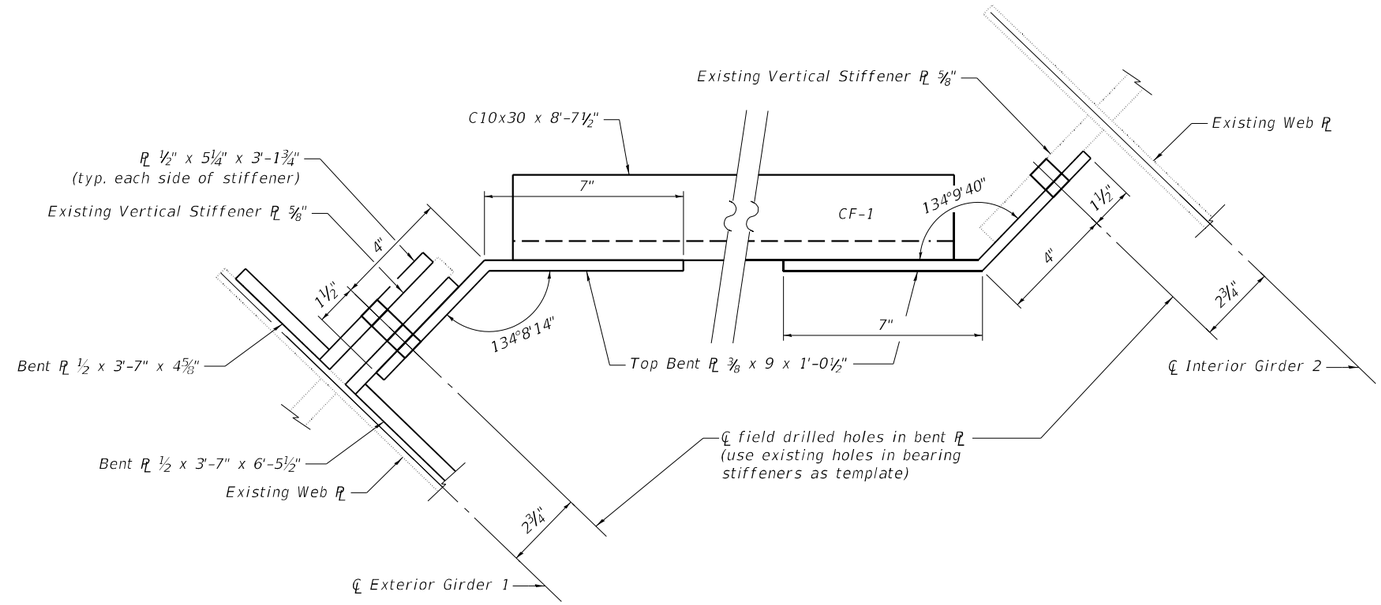

DETAIL 1

(W. Abut. EB/E. Abut. WB shown)
(W. Abut. WB/E. Abut. EB similar)

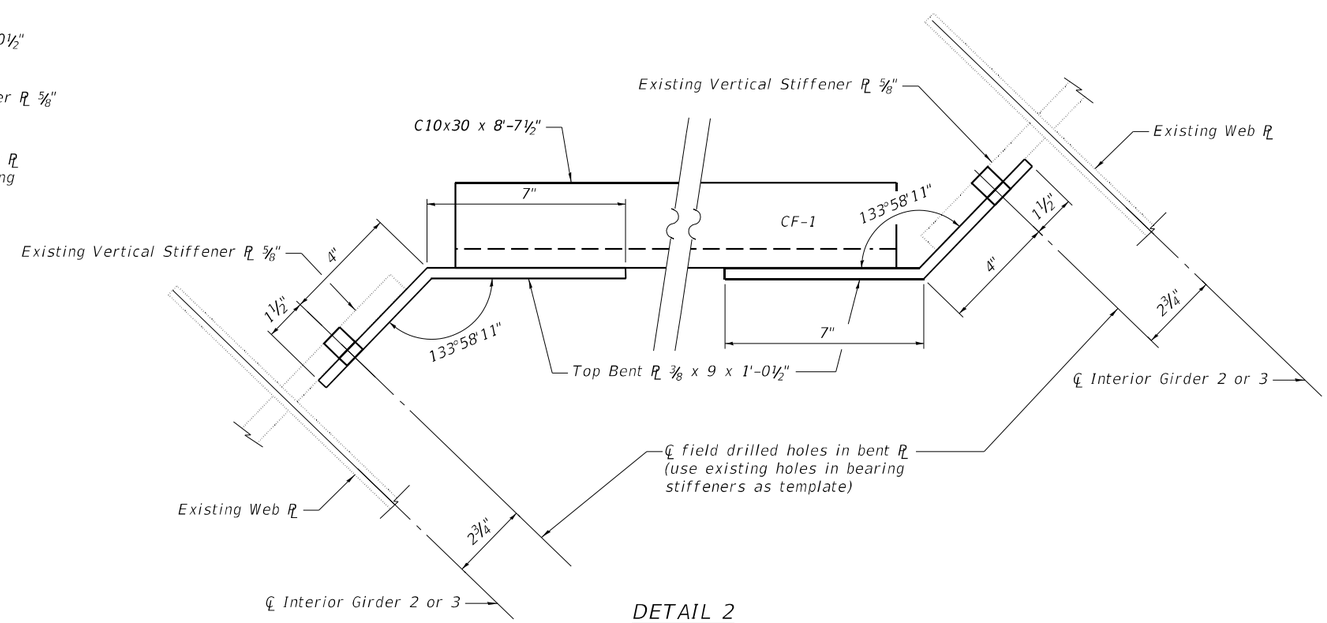

DETAIL 2

PRE-STAGE D CONSTRUCTION

(SHEET 2 OF 4)

CEC Cummins Engineering Corporation ENGINEERS & SURVEYORS	JOB = 2564.3	DESIGNED - AAN	REVISED -	STATE OF ILLINOIS DEPARTMENT OF TRANSPORTATION	PRE-STAGE STEEL REPAIRS – CROSS FRAME STRUCTURE NO. 074-0069 (EB) AND 074-0070 (WB)	F.A.I.	SECTION	COUNTY	TOTAL SHEETS / SHEET NO.
	FILE = 07400069_0070-70024-010.013-SteelRepairCF-1	CHECKED - MDC	REVISED -			72	(74-68VB)B	PIATT	93 / 47
	DATE = 4/15/2025	DRAWN - TSH	REVISED -					CONTRACT NO. 70024	
		CHECKED - MDC	REVISED -		SHEET NO. 11 OF 49 SHEETS		ILLINOIS FED. AID PROJECT		

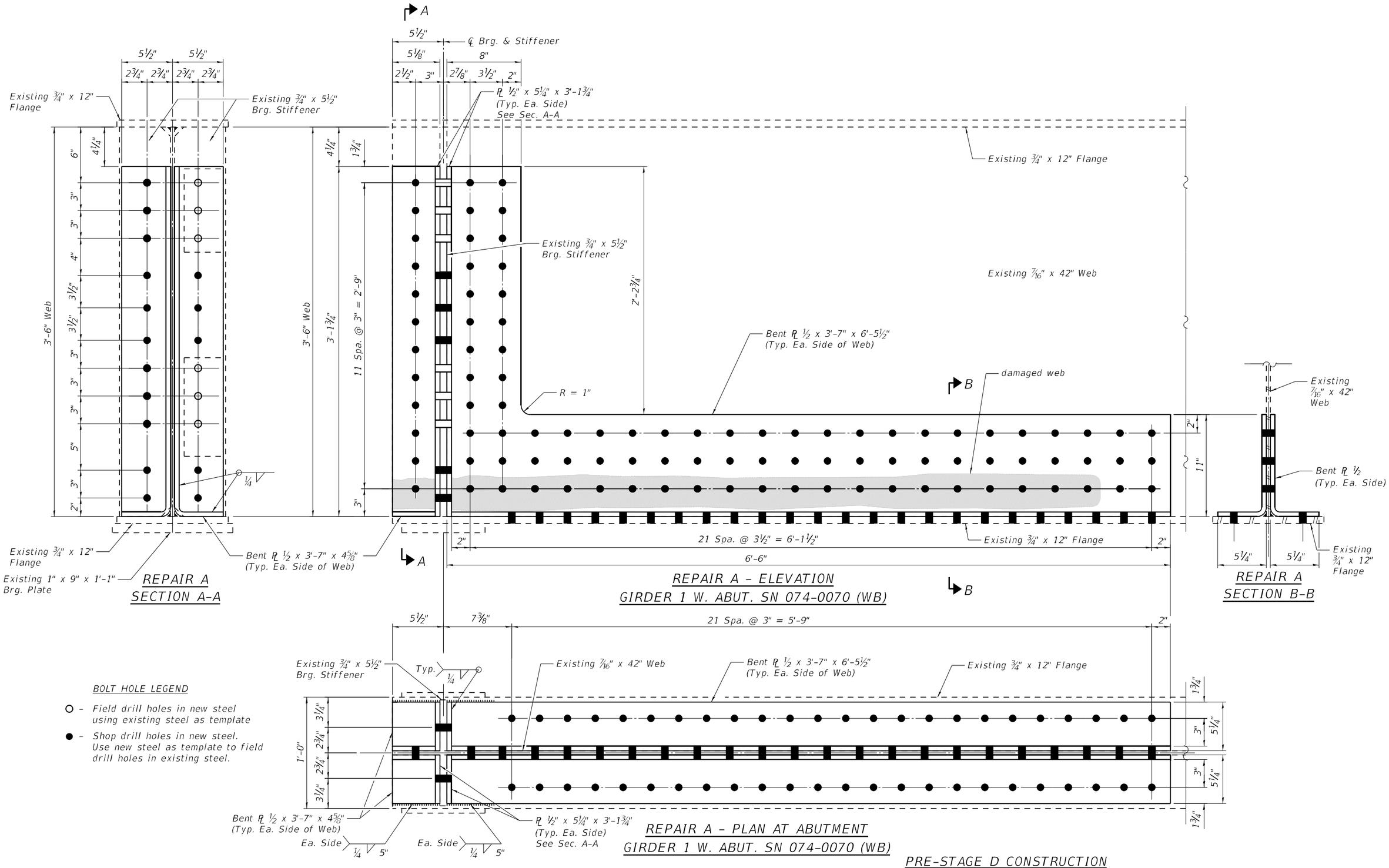

CEC Cummins Engineering Corporation ENGINEERS & SURVEYORS	JOB = 2564.3	DESIGNED - AAN	REVISED -	STATE OF ILLINOIS DEPARTMENT OF TRANSPORTATION	PRE-STAGE STEEL REPAIRS - DETAILS STRUCTURE NO. 074-0069 (EB) AND 074-0070 (WB)	F.A.I.	SECTION	COUNTY	TOTAL SHEETS	SHEET NO.
	FILE = 0740069.0070-70024-010.013-SteelRepairCHECK	CHECKED - MDC	REVISED -			72	(74-68VB)B	PIATT	93	48
	DATE = 4/14/2025	DRAWN - TSH	REVISED -					CONTRACT NO. 70024		
		CHECKED - MDC	REVISED -		SHEET NO. 12 OF 49 SHEETS			ILLINOIS FED. AID PROJECT		

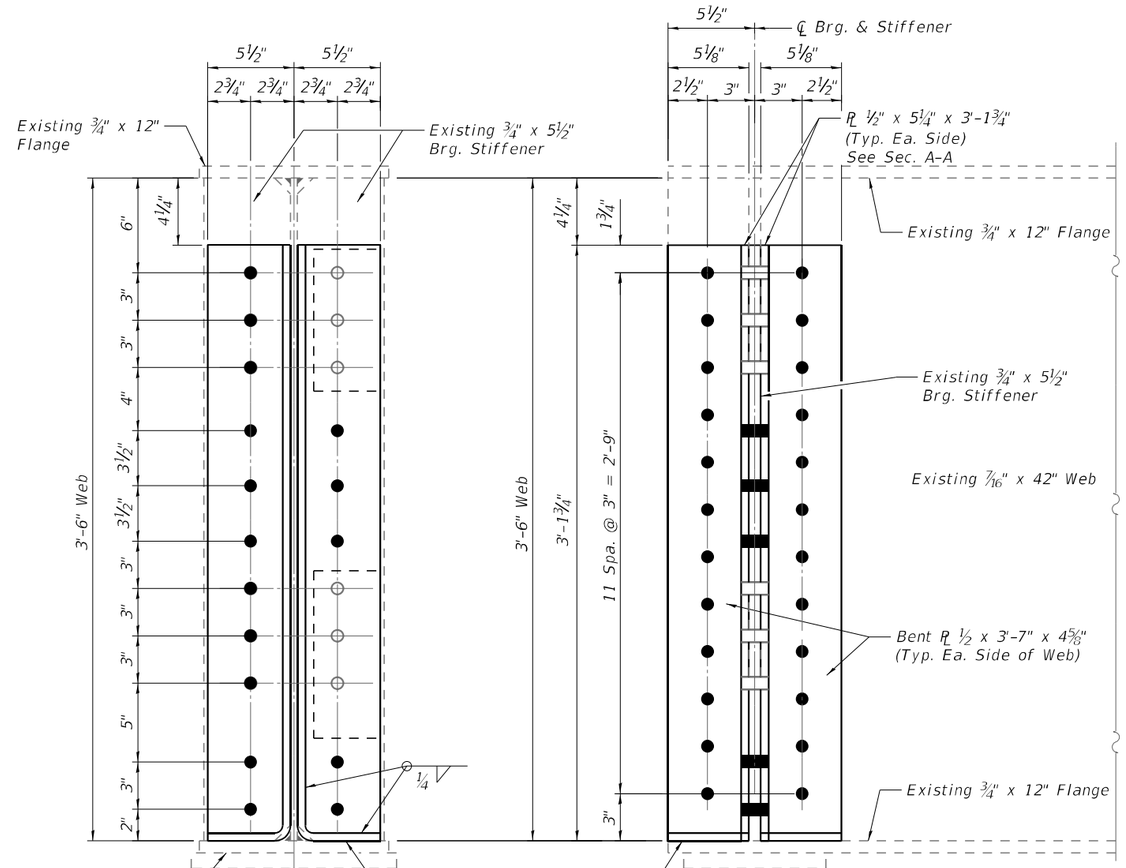

REPAIR B
SECTION C-C

REPAIR B - ELEVATION
GIRDER 1 E. ABUT. SN 074-0070 (WB)
GIRDER 1 W. ABUT. SN 074-0069 (EB)
GIRDER 1 E. ABUT. SN 074-0069 (EB)

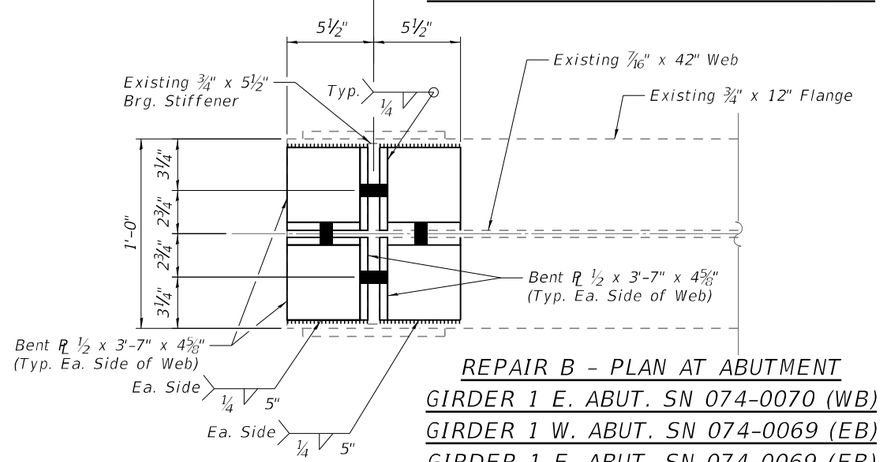

REPAIR B - PLAN AT ABUTMENT
GIRDER 1 E. ABUT. SN 074-0070 (WB)
GIRDER 1 W. ABUT. SN 074-0069 (EB)
GIRDER 1 E. ABUT. SN 074-0069 (EB)

BOLT HOLE LEGEND

○ - Field drill holes in new steel using existing steel as template

● - Shop drill holes in new steel. Use new steel as template to field drill holes in existing steel.

PRE-STAGE D CONSTRUCTION
(SHEET 4 OF 4)

CEC Cummins Engineering Corporation ENGINEERS & SURVEYORS	JOB = 2564.3	DESIGNED - AAN	REVISED -	STATE OF ILLINOIS DEPARTMENT OF TRANSPORTATION	PRE-STAGE STEEL REPAIRS - DETAILS STRUCTURE NO. 074-0069 (EB) AND 074-0070 (WB)	F.A.I.	SECTION	COUNTY	TOTAL SHEETS	SHEET NO.
	FILE = 0740069.0070-70024-010.013-SteelRepairCHECKED	CHECKED - MDC	REVISED -			72	(74-68VB)B	PIATT	93	49
	DATE = 4/8/2025	DRAWN - TSH	REVISED -			CONTRACT NO. 70024				
		CHECKED - MDC	REVISED -		SHEET NO. 13 OF 49 SHEETS	ILLINOIS FED. AID PROJECT				

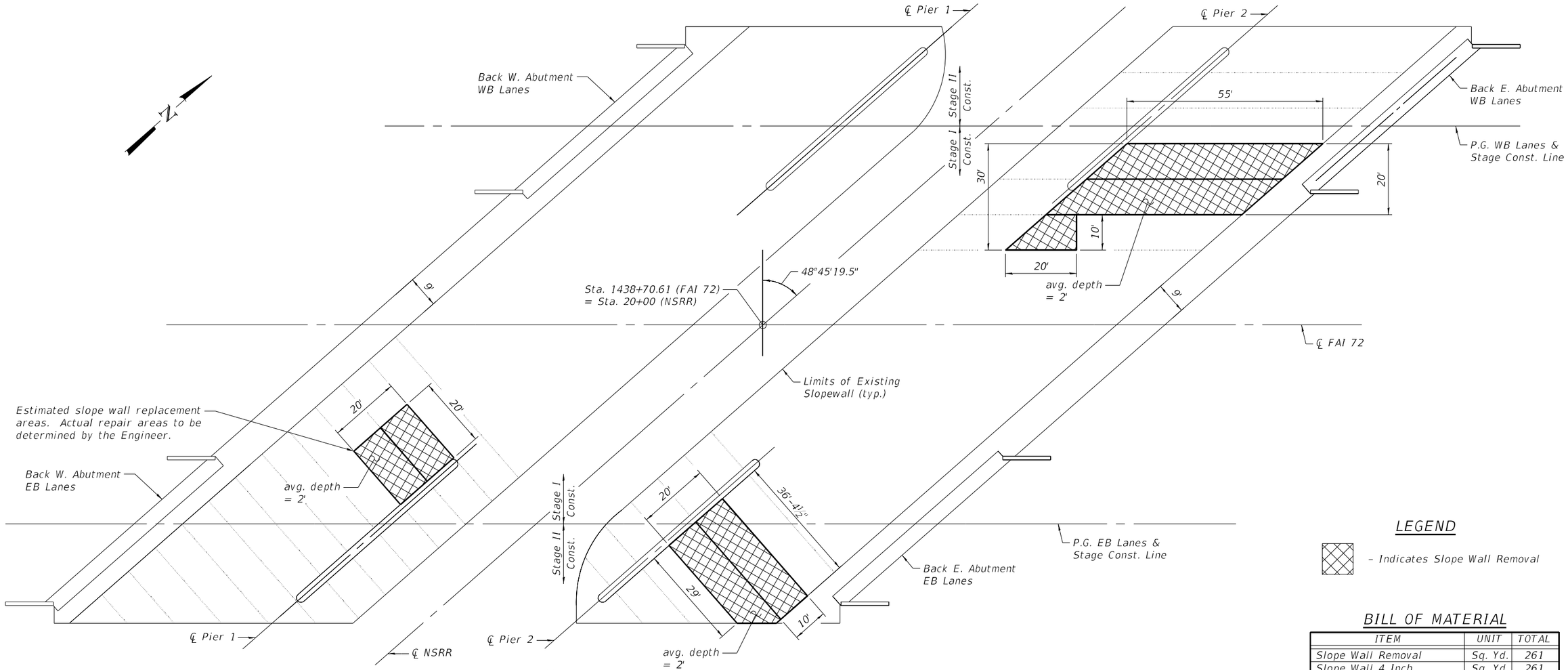

PLAN

LEGEND

- Indicates Slope Wall Removal

BILL OF MATERIAL

ITEM	UNIT	TOTAL
Slope Wall Removal	Sq. Yd.	261
Slope Wall 4 Inch	Sq. Yd.	261
Rock Fill - Embankment	Cu. Yd.	174

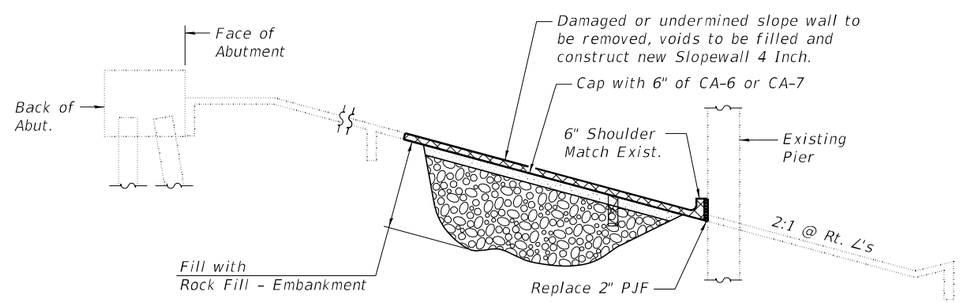

TYPICAL SECTION THRU EXISTING CONCRETE SLOPEWALL

Notes:

1. Existing damaged or undermined 4" concrete slopewall shall be removed.
2. Fill any voids and grade the slopewall with rock fill as shown herein and as directed by the Engineer.
3. A quantity of 174 Cu. Yds. has been estimated to fill voids in the existing slopewalls. The required quantity may vary and Resident Engineer shall adjust the quantity as required to suit the field conditions. Such variations shall not be cause for additional compensation for a change in scope of work, however, the Contractor will be paid for the quantity actually furnished at the unit price bid for work.
4. Slope wall shall be reinforced with welded wire fabric, 6x6-W4.0 x W4.0, weighing 58 lbs per 100 sq. ft.

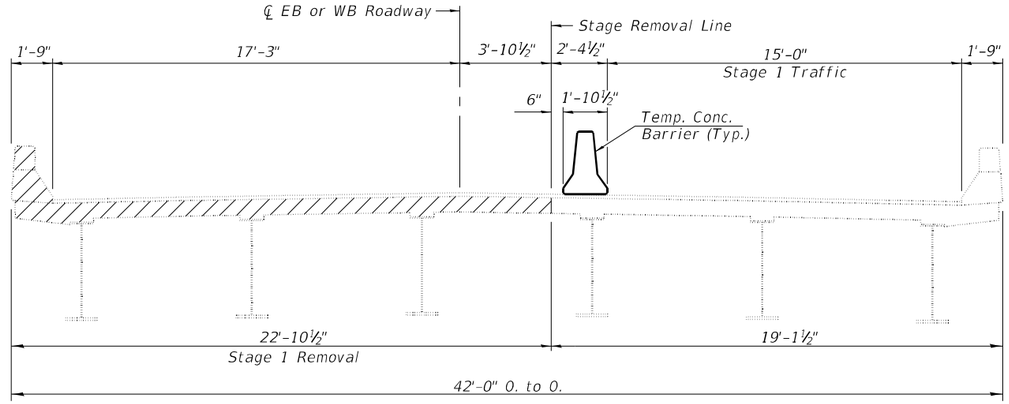

STAGE 1 REMOVAL

074-0069 (EB) (Looking East)
074-0070 (WB) (Looking West)

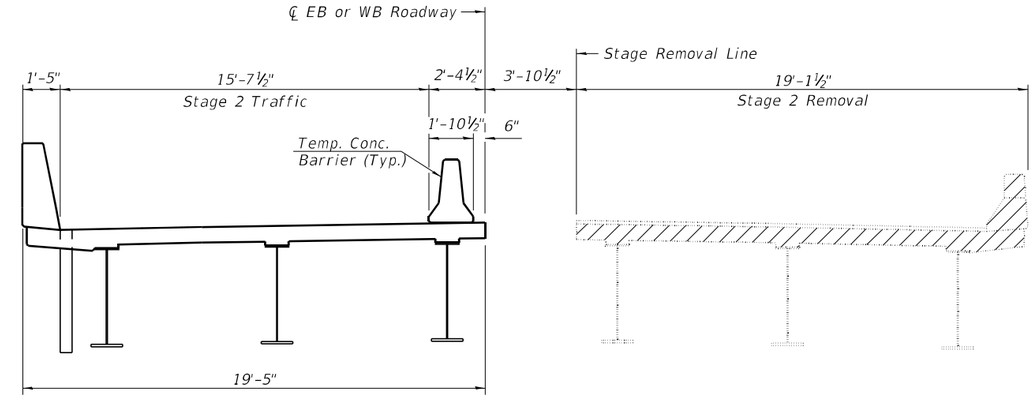

STAGE 2 REMOVAL

074-0069 (EB) (Looking East)
074-0070 (WB) (Looking West)

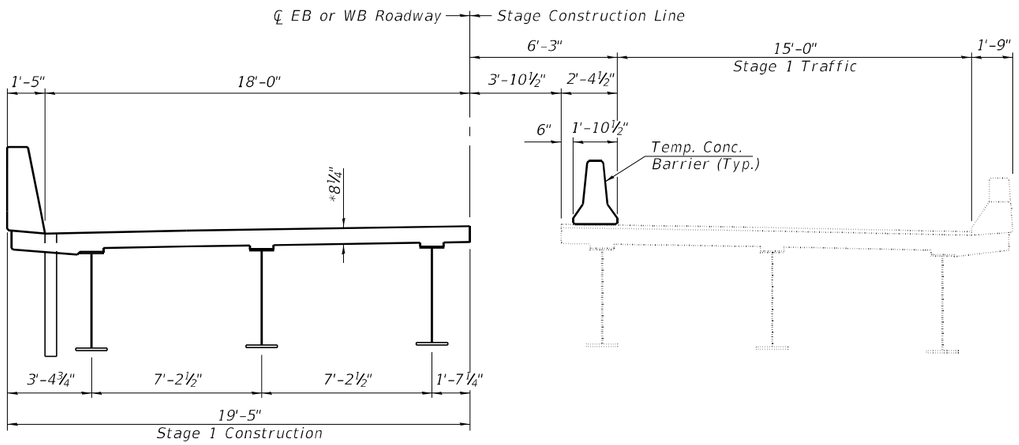

STAGE 1 CONSTRUCTION

074-0069 (EB) (Looking East)
074-0070 (WB) (Looking West)

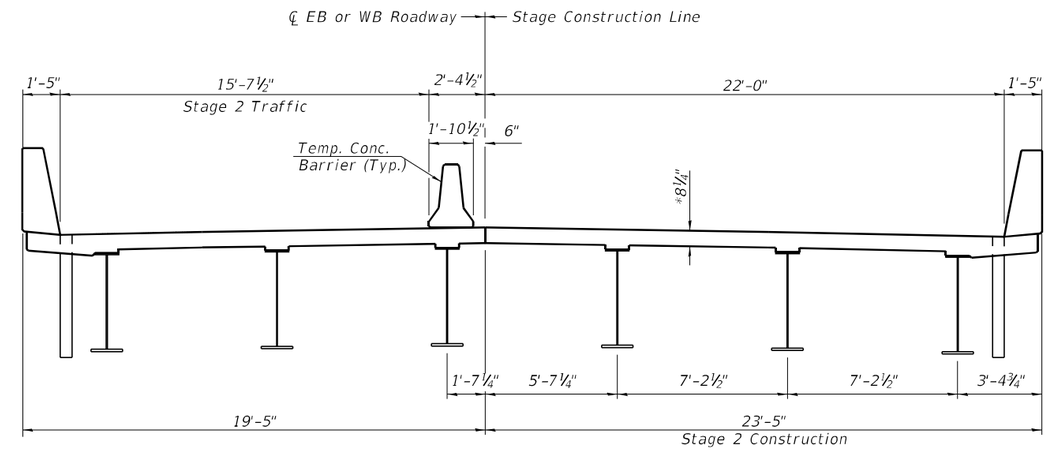

STAGE 2 CONSTRUCTION

074-0069 (EB) (Looking East)
074-0070 (WB) (Looking West)

* Prior to grinding

Hatched area indicatess Removal of Existing Superstructures No.1 or No.2.

For quantities of Temperary Concrete Barrier, see Roadway Plans.

For temporary Concrete Barrier Details, see sheet 16 of 49.

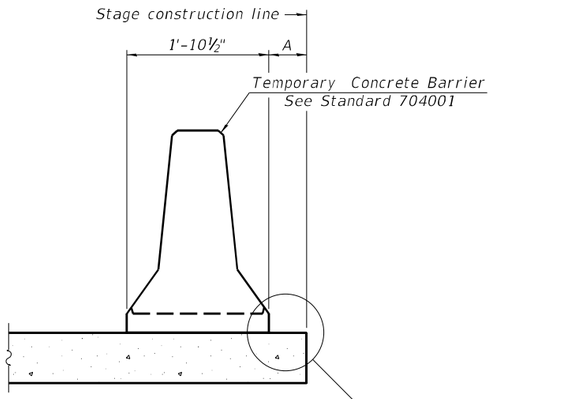

When "A" is 3'-1" or less, the temporary concrete barrier shall be restrained to the new slab according to Detail I, II or III. No restraint is required when "A" is greater than 3'-1".

NEW SLAB OR NEW DECK BEAM

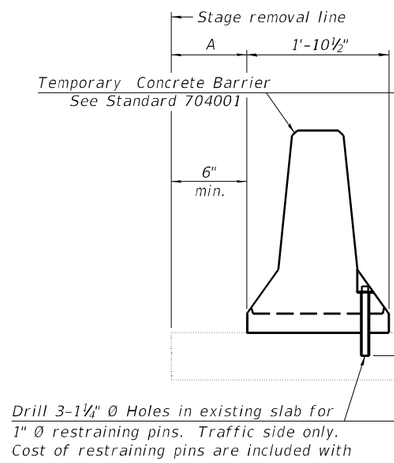

Drill 3-1¼" Ø Holes in existing slab for 1" Ø restraining pins. Traffic side only. Cost of restraining pins are included with Temporary Concrete Barrier. No restraint is required when "A" is greater than 3'-1".

EXISTING SLAB

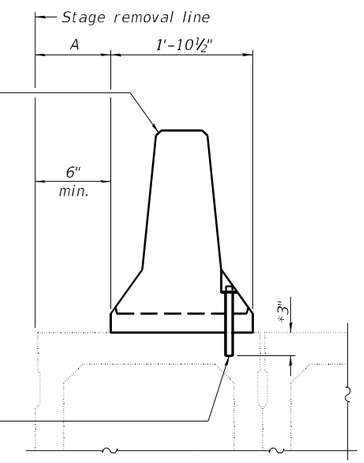

* When hot-mix asphalt wearing surface is present, embedment shall be 3" plus the wearing surface depth.

EXISTING DECK BEAM

SECTIONS THRU SLAB OR DECK BEAM

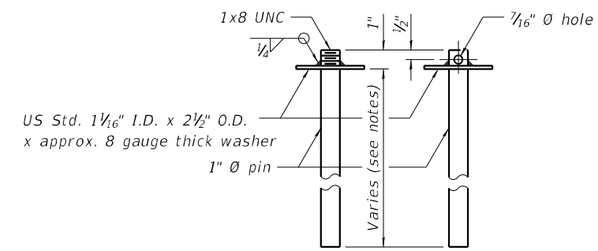

RESTRAINING PIN

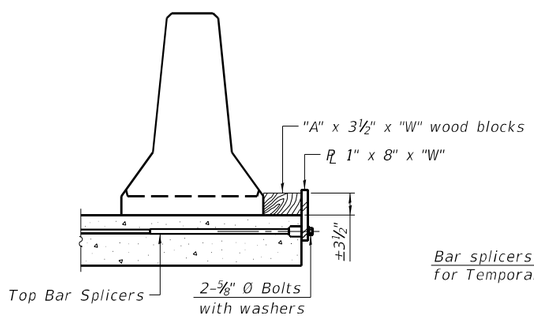

DETAIL I

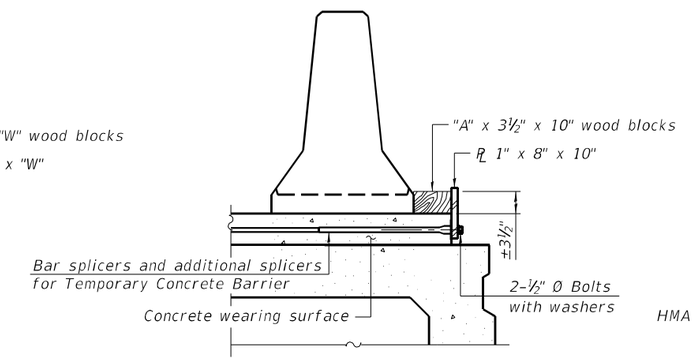

DETAIL II

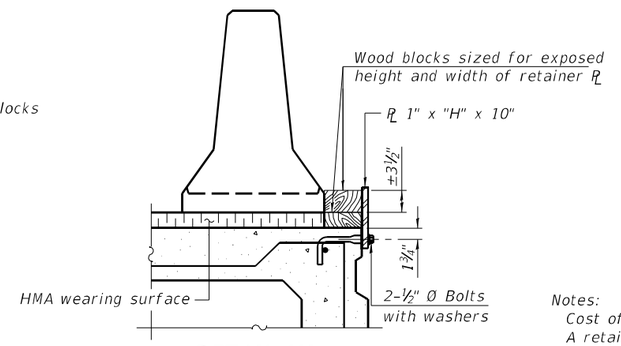

DETAIL III

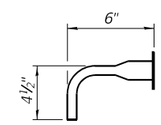

BAR SPLICER FOR #4 BAR - DETAIL III

Notes:

Cost of retainer assembly is included with Temporary Concrete Barrier.

A retainer assembly shall be located at the approximate ℄ of each temporary concrete barrier.

The retainer plate shall not be removed until the concrete on the adjacent stage is ready to be poured. For Detail III applications the retainer plate shall not be removed until just prior to placing the adjacent beam.

When the 'A' dimension is less than 1½", the wood block shall be omitted and the barrier shall be placed in direct contact with the steel retainer plate. For deck beam applications the minimum required 'A' distance is 6" to accommodate the shear key clamping device.

Detail I - Installation for a new bridge deck or bridge slab.

Detail II - Installation for a new deck beam with an initial concrete wearing surface. Additional bar splicers shall be provided at 6'-0" centers and paired with the bar splicers of the concrete wearing surface reinforcement to accommodate the installation of the retainer assemblies. The cost of the additional bar splicers is included with the concrete wearing surface.

Detail III - Installation for a new deck beam with no initial wearing surface or with an initial hot-mix asphalt (HMA) wearing surface present. The deck beam directly beneath the temporary concrete barrier shall be fabricated with bar splicer inserts in the side of the beam, as detailed, to accommodate the installation of the retainer assemblies. A pair of bar splicers, 6" apart, shall be placed at 6'-0" centers along the length of the beam. The cost of the bar splicers is included with the deck beam.

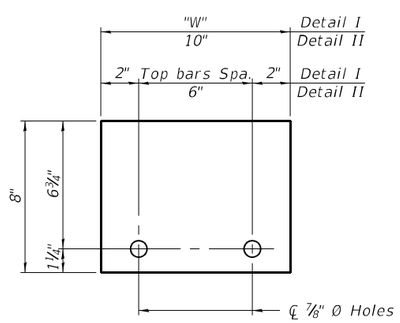

STEEL RETAINER PL 1" x 8" x "W"

(Detail I and II)

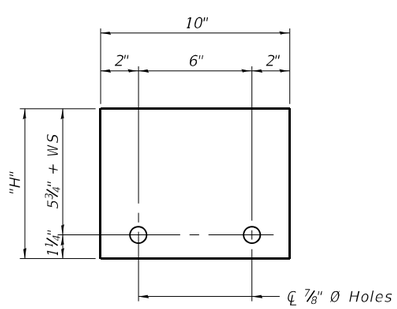

STEEL RETAINER PL 1" x "H" x 10"

(Detail III)

RAILING CRITERIA

NCHRP 350 Test Level	3
Railing Weight (plf)	440

R-27

10-12-2021

CEC Cummins Engineering Corporation — ENGINEERS & SURVEYORS	JOB = 2564.3	DESIGNED - AAN	REVISED -
	FILE = 0740069.0070-70024-016-Barrier.dgn	CHECKED - MDC	REVISED -
	DATE = 3/10/2025	DRAWN - CDS	REVISED -
		CHECKED - MDC	REVISED -

STATE OF ILLINOIS
DEPARTMENT OF TRANSPORTATION

TEMPORARY CONCRETE BARRIER
STRUCTURE NO. 074-0069 (EB) AND 074-0070 (WB)

SHEET NO. 16 OF 49 SHEETS

F.A.I.	SECTION	COUNTY	TOTAL SHEETS	SHEET NO.
72	(74-68VB)B	PIATT	93	52
		CONTRACT NO. 70024		
		ILLINOIS FED. AID PROJECT		

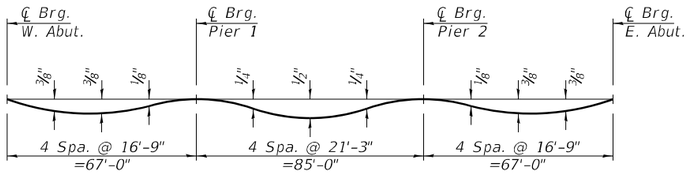

DEAD LOAD DEFLECTION DIAGRAM

(Includes weight of concrete only.)

Note:
The above deflections are not to be used in the field if the engineer is working from the grade elevations adjusted for dead load deflections and grinding as shown on sheets 18 thru 22 of 49.

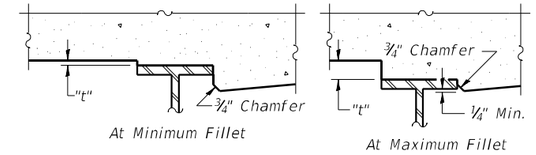

To determine "t": After all structural steel has been erected, elevations of the top flanges of the girders shall be taken at intervals shown below. These elevations subtracted from the "Theoretical Grade Elevations Adjusted for Dead Load Deflection and Grinding" shown on Sheets 18 thru 22 of 49, minus 8 1/4" deck thickness, equals the fillet heights "t" above top flange of girders.

The slab is to be ground after curing to achieve smoothness, but the slab is not to be ground to elevations below the "Theoretical Grade Elevations" shown on sheets 18 thru 22 of 49. For grinding the deck, see Special Provisions.

FILLET HEIGHTS

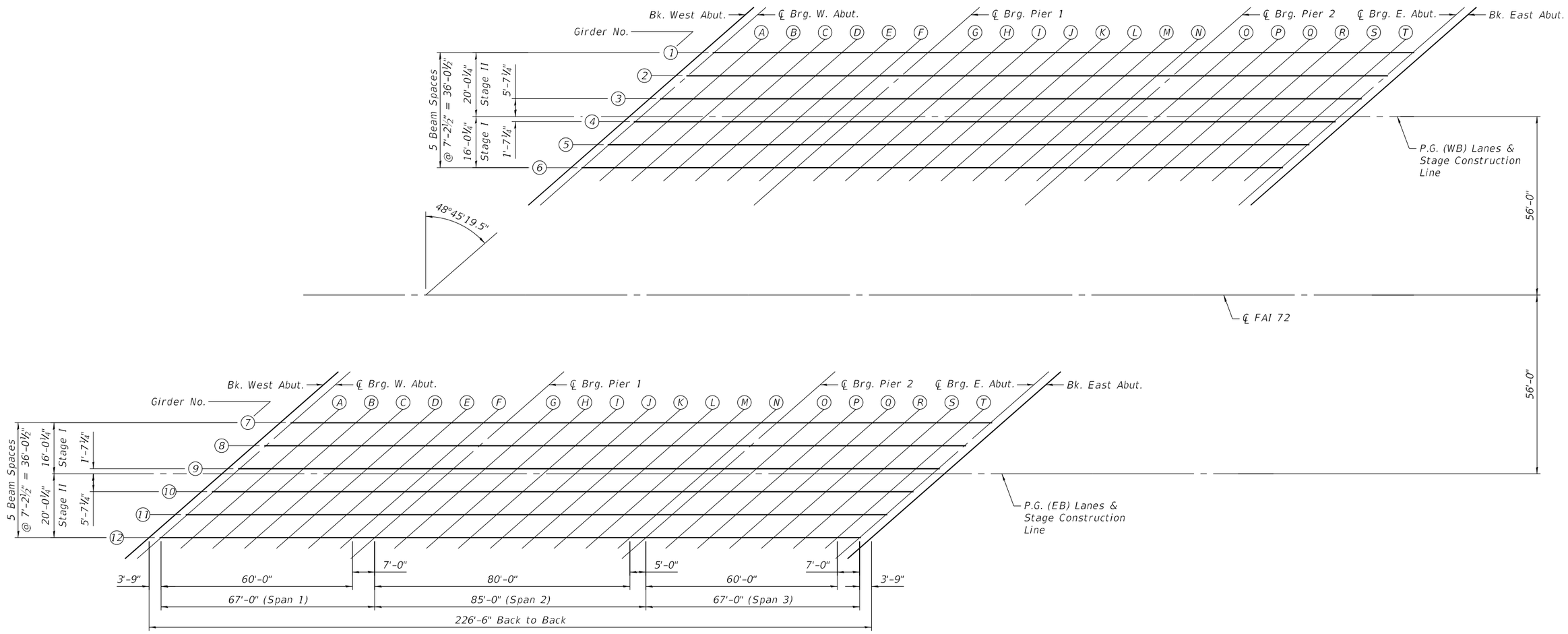

PLAN

CEC Cummins Engineering Corporation ENGINEERS & SURVEYORS	JOB = 2564.3	DESIGNED - AAN	REVISED -	STATE OF ILLINOIS DEPARTMENT OF TRANSPORTATION	TOP OF SLAB ELEVATIONS STRUCTURE NO. 074-0069 (EB) AND 074-0070 (WB)	F.A.I.	SECTION	COUNTY	TOTAL SHEETS / SHEET NO.
	FILE = 0740069.0070-70024-017.022-TOS.dgn	CHECKED - MDC	REVISED -			72	(74-68VB)B	PIATT	93 / 53
	DATE = 3/10/2025	DRAWN - CDS	REVISED -					CONTRACT NO. 70024	
		CHECKED - MDC	REVISED -		SHEET NO. 17 OF 49 SHEETS		ILLINOIS FED. AID PROJECT		

GIRDER 1 (WB)

Location	Station	Offset	Theoretical Grade Elevations	Theoretical Grade Elevations Adjusted For Dead Load Deflection and Grinding
Back W. Abutment	1438+44.07	-20.02	677.28	677.30
℄ Brg. W. Abutment	1438+47.82	-20.02	677.29	677.31
A	1438+57.82	-20.02	677.31	677.35
B	1438+67.82	-20.02	677.33	677.38
C	1438+77.82	-20.02	677.34	677.40
D	1438+87.82	-20.02	677.36	677.40
E	1438+97.82	-20.02	677.37	677.40
F	1439+07.82	-20.02	677.37	677.40
℄ Brg. Pier 1	1439+14.82	-20.02	677.38	677.40
G	1439+24.82	-20.02	677.38	677.40
H	1439+34.82	-20.02	677.38	677.42
I	1439+44.82	-20.02	677.37	677.43
J	1439+54.82	-20.02	677.37	677.43
K	1439+64.82	-20.02	677.36	677.42
L	1439+74.82	-20.02	677.35	677.40
M	1439+84.82	-20.02	677.33	677.36
N	1439+94.82	-20.02	677.31	677.33
℄ Brg. Pier 2	1439+99.82	-20.02	677.30	677.32
O	1440+09.82	-20.02	677.28	677.31
P	1440+19.82	-20.02	677.26	677.30
Q	1440+29.82	-20.02	677.23	677.28
R	1440+39.82	-20.02	677.20	677.25
S	1440+49.82	-20.02	677.17	677.21
T	1440+59.82	-20.02	677.13	677.16
℄ Brg. E. Abutment	1440+66.82	-20.02	677.10	677.12
Back E. Abutment	1440+70.57	-20.02	677.09	677.11

GIRDER 2 (WB)

Location	Station	Offset	Theoretical Grade Elevations	Theoretical Grade Elevations Adjusted For Dead Load Deflection and Grinding
Back W. Abutment	1438+38.84	-12.81	677.41	677.43
℄ Brg. W. Abutment	1438+39.59	-12.81	677.42	677.44
A	1438+49.59	-12.81	677.44	677.48
B	1438+59.59	-12.81	677.46	677.51
C	1438+69.59	-12.81	677.48	677.53
D	1438+79.59	-12.81	677.49	677.54
E	1438+89.59	-12.81	677.50	677.54
F	1438+99.59	-12.81	677.51	677.53
℄ Brg. Pier 1	1439+06.59	-12.81	677.52	677.54
G	1439+16.59	-12.81	677.52	677.55
H	1439+26.59	-12.81	677.52	677.56
I	1439+36.59	-12.81	677.52	677.58
J	1439+46.59	-12.81	677.52	677.58
K	1439+56.59	-12.81	677.51	677.57
L	1439+66.59	-12.81	677.50	677.55
M	1439+76.59	-12.81	677.49	677.52
N	1439+86.59	-12.81	677.47	677.49
℄ Brg. Pier 2	1439+91.59	-12.81	677.46	677.48
O	1440+01.59	-12.81	677.44	677.47
P	1440+11.59	-12.81	677.42	677.46
Q	1440+21.59	-12.81	677.40	677.45
R	1440+31.59	-12.81	677.37	677.42
S	1440+41.59	-12.81	677.34	677.39
T	1440+51.59	-12.81	677.30	677.34
℄ Brg. E. Abutment	1440+58.59	-12.81	677.28	677.30
Back E. Abutment	1440+62.34	-12.81	677.26	677.28

GIRDER 3 (WB)

Location	Station	Offset	Theoretical Grade Elevations	Theoretical Grade Elevations Adjusted For Dead Load Deflection and Grinding
Back W. Abutment	1438+27.62	-5.60	677.50	677.52
℄ Brg. W. Abutment	1438+31.37	-5.60	677.51	677.53
A	1438+41.37	-5.60	677.53	677.57
B	1438+51.37	-5.60	677.55	677.61
C	1438+61.37	-5.60	677.57	677.63
D	1438+71.37	-5.60	677.59	677.64
E	1438+81.37	-5.60	677.61	677.64
F	1438+91.37	-5.60	677.62	677.64
℄ Brg. Pier 1	1438+98.37	-5.60	677.62	677.64
G	1439+08.37	-5.60	677.63	677.66
H	1439+18.37	-5.60	677.63	677.68
I	1439+28.37	-5.60	677.63	677.69
J	1439+38.37	-5.60	677.63	677.70
K	1439+48.37	-5.60	677.63	677.69
L	1439+58.37	-5.60	677.62	677.67
M	1439+68.37	-5.60	677.61	677.64
N	1439+78.37	-5.60	677.60	677.62
℄ Brg. Pier 2	1439+83.37	-5.60	677.59	677.61
O	1439+93.37	-5.60	677.57	677.60
P	1440+03.37	-5.60	677.55	677.59
Q	1440+13.37	-5.60	677.53	677.58
R	1440+23.37	-5.60	677.50	677.56
S	1440+33.37	-5.60	677.47	677.52
T	1440+43.37	-5.60	677.44	677.48
℄ Brg. E. Abutment	1440+50.37	-5.60	677.42	677.44
Back E. Abutment	1440+54.12	-5.60	677.41	677.43

GIRDER 4 (WB)

Location	Station	Offset	Theoretical Grade Elevations	Theoretical Grade Elevations Adjusted For Dead Load Deflection and Grinding
Back W. Abutment	1438+19.41	1.60	677.53	677.55
℄ Brg. W. Abutment	1438+23.16	1.60	677.54	677.56
A	1438+33.16	1.60	677.57	677.61
B	1438+43.16	1.60	677.60	677.65
C	1438+53.16	1.60	677.62	677.67
D	1438+63.16	1.60	677.64	677.69
E	1438+73.16	1.60	677.65	677.69
F	1438+83.16	1.60	677.67	677.69
℄ Brg. Pier 1	1438+90.16	1.60	677.68	677.70
G	1439+00.16	1.60	677.68	677.71
H	1439+10.16	1.60	677.69	677.73
I	1439+20.16	1.60	677.69	677.75
J	1439+30.16	1.60	677.69	677.76
K	1439+40.16	1.60	677.69	677.75
L	1439+50.16	1.60	677.69	677.74
M	1439+60.16	1.60	677.68	677.71
N	1439+70.16	1.60	677.67	677.69
℄ Brg. Pier 2	1439+75.16	1.60	677.66	677.68
O	1439+85.16	1.60	677.65	677.67
P	1439+95.16	1.60	677.63	677.67
Q	1440+05.16	1.60	677.61	677.66
R	1440+15.16	1.60	677.58	677.64
S	1440+25.16	1.60	677.56	677.61
T	1440+35.16	1.60	677.53	677.56
℄ Brg. E. Abutment	1440+42.16	1.60	677.51	677.53
Back E. Abutment	1440+45.91	1.60	677.49	677.51

GIRDER 5 (WB)

Location	Station	Offset	Theoretical Grade Elevations	Theoretical Grade Elevations Adjusted For Dead Load Deflection and Grinding
Back W. Abutment	1438+11.19	8.81	677.40	677.42
℄ Brg. W. Abutment	1438+14.94	8.81	677.41	677.43
A	1438+24.94	8.81	677.44	677.48
B	1438+34.94	8.81	677.47	677.52
C	1438+44.94	8.81	677.49	677.55
D	1438+54.94	8.81	677.51	677.56
E	1438+64.94	8.81	677.53	677.57
F	1438+74.94	8.81	677.55	677.57
℄ Brg. Pier 1	1438+81.94	8.81	677.56	677.58
G	1438+91.94	8.81	677.57	677.60
H	1439+01.94	8.81	677.58	677.62
I	1439+11.94	8.81	677.58	677.64
J	1439+21.94	8.81	677.59	677.65
K	1439+31.94	8.81	677.59	677.65
L	1439+41.94	8.81	677.58	677.63
M	1439+51.94	8.81	677.58	677.61
N	1439+61.94	8.81	677.57	677.59
℄ Brg. Pier 2	1439+66.94	8.81	677.56	677.58
O	1439+76.94	8.81	677.55	677.58
P	1439+86.94	8.81	677.54	677.57
Q	1439+96.94	8.81	677.52	677.57
R	1440+06.94	8.81	677.50	677.55
S	1440+16.94	8.81	677.47	677.52
T	1440+26.94	8.81	677.45	677.48
℄ Brg. E. Abutment	1440+33.94	8.81	677.42	677.44
Back E. Abutment	1440+37.69	8.81	677.41	677.43

GIRDER 6 (WB)

Location	Station	Offset	Theoretical Grade Elevations	Theoretical Grade Elevations Adjusted For Dead Load Deflection and Grinding
Back W. Abutment	1438+02.96	16.02	677.24	677.26
℄ Brg. W. Abutment	1438+06.71	16.02	677.26	677.28
A	1438+16.71	16.02	677.29	677.33
B	1438+26.71	16.02	677.32	677.37
C	1438+36.71	16.02	677.34	677.40
D	1438+46.71	16.02	677.37	677.42
E	1438+56.71	16.02	677.39	677.42
F	1438+66.71	16.02	677.41	677.43
℄ Brg. Pier 1	1438+73.71	16.02	677.42	677.44
G	1438+83.71	16.02	677.43	677.46
H	1438+93.71	16.02	677.44	677.48
I	1439+03.71	16.02	677.45	677.51
J	1439+13.71	16.02	677.46	677.52
K	1439+23.71	16.02	677.46	677.52
L	1439+33.71	16.02	677.46	677.51
M	1439+43.71	16.02	677.45	677.49
N	1439+53.71	16.02	677.45	677.47
℄ Brg. Pier 2	1439+58.71	16.02	677.44	677.46
O	1439+68.71	16.02	677.43	677.46
P	1439+78.71	16.02	677.42	677.46
Q	1439+88.71	16.02	677.40	677.45
R	1439+98.71	16.02	677.39	677.44
S	1440+08.71	16.02	677.36	677.41
T	1440+18.71	16.02	677.34	677.37
℄ Brg. E. Abutment	1440+25.71	16.02	677.32	677.34
Back E. Abutment	1440+29.46	16.02	677.31	677.33

PROFILE GRADE (WB) LANES & STAGE CONSTRUCTION LINE

Location	Station	Offset	Theoretical Grade Elevations	Theoretical Grade Elevations Adjusted For Dead Load Deflection and Grinding
Back W. Abutment	1438+21.23	0.00	677.56	677.58
℄ Brg. W. Abutment	1438+24.98	0.00	677.57	677.59
A	1438+34.98	0.00	677.60	677.64
B	1438+44.98	0.00	677.62	677.68
C	1438+54.98	0.00	677.65	677.70
D	1438+64.98	0.00	677.66	677.71
E	1438+74.98	0.00	677.68	677.72
F	1438+84.98	0.00	677.69	677.72
℄ Brg. Pier 1	1438+91.98	0.00	677.70	677.72
G	1439+01.98	0.00	677.71	677.74
H	1439+11.98	0.00	677.72	677.76
I	1439+21.98	0.00	677.72	677.77
J	1439+31.98	0.00	677.72	677.78
K	1439+41.98	0.00	677.72	677.78
L	1439+51.98	0.00	677.71	677.76
M	1439+61.98	0.00	677.70	677.73
N	1439+71.98	0.00	677.69	677.71
℄ Brg. Pier 2	1439+76.98	0.00	677.68	677.70
O	1439+86.98	0.00	677.67	677.69
P	1439+96.98	0.00	677.65	677.69
Q	1440+06.98	0.00	677.63	677.68
R	1440+16.98	0.00	677.60	677.66
S	1440+26.98	0.00	677.58	677.63
T	1440+36.98	0.00	677.55	677.58
℄ Brg. E. Abutment	1440+43.98	0.00	677.53	677.55
Back E. Abutment	1440+47.73	0.00	677.51	677.53

PROFILE GRADE (EB) LANES & STAGE CONSTRUCTION LINE

Location	Station	Offset	Theoretical Grade Elevations	Theoretical Grade Elevations Adjusted For Dead Load Deflection and Grinding
Back W. Abutment	1436+93.49	0.00	677.19	677.21
℄ Brg. W. Abutment	1436+97.24	0.00	677.21	677.23
A	1437+07.24	0.00	677.25	677.29
B	1437+17.24	0.00	677.30	677.35
C	1437+27.24	0.00	677.34	677.39
D	1437+37.24	0.00	677.38	677.42
E	1437+47.24	0.00	677.41	677.45
F	1437+57.24	0.00	677.45	677.47
℄ Brg. Pier 1	1437+64.24	0.00	677.47	677.49
G	1437+74.24	0.00	677.50	677.53
H	1437+84.24	0.00	677.53	677.57
I	1437+94.24	0.00	677.55	677.61
J	1438+04.24	0.00	677.57	677.64
K	1438+14.24	0.00	677.59	677.66
L	1438+24.24	0.00	677.61	677.66
M	1438+34.24	0.00	677.63	677.66
N	1438+44.24	0.00	677.64	677.66
℄ Brg. Pier 2	1438+49.24	0.00	677.65	677.67
O	1438+59.24	0.00	677.66	677.68
P	1438+69.24	0.00	677.66	677.70
Q	1438+79.24	0.00	677.67	677.72
R	1438+89.24	0.00	677.67	677.72
S	1438+99.24	0.00	677.67	677.72
T	1439+09.24	0.00	677.67	677.70
℄ Brg. E. Abutment	1439+16.24	0.00	677.66	677.68
Back E. Abutment	1439+19.99	0.00	677.66	677.68

GIRDER 7 (EB)

Location	Station	Offset	Theoretical Grade Elevations	Theoretical Grade Elevations Adjusted For Dead Load Deflection and Grinding
Back W. Abutment	1437+11.77	-16.02	677.01	677.03
℄ Brg. W. Abutment	1437+15.52	-16.02	677.03	677.05
A	1437+25.52	-16.02	677.07	677.11
B	1437+35.52	-16.02	677.11	677.16
C	1437+45.52	-16.02	677.15	677.20
D	1437+55.52	-16.02	677.18	677.23
E	1437+65.52	-16.02	677.21	677.25
F	1437+75.52	-16.02	677.24	677.26
℄ Brg. Pier 1	1437+82.52	-16.02	677.26	677.28
G	1437+92.52	-16.02	677.29	677.31
H	1438+02.52	-16.02	677.31	677.35
I	1438+12.52	-16.02	677.33	677.39
J	1438+22.52	-16.02	677.35	677.41
K	1438+32.52	-16.02	677.36	677.43
L	1438+42.52	-16.02	677.38	677.43
M	1438+52.52	-16.02	677.39	677.42
N	1438+62.52	-16.02	677.40	677.42
℄ Brg. Pier 2	1438+67.52	-16.02	677.40	677.42
O	1438+77.52	-16.02	677.41	677.43
P	1438+87.52	-16.02	677.41	677.45
Q	1438+97.52	-16.02	677.41	677.46
R	1439+07.52	-16.02	677.41	677.46
S	1439+17.52	-16.02	677.40	677.45
T	1439+27.52	-16.02	677.39	677.43
℄ Brg. E. Abutment	1439+34.52	-16.02	677.39	677.41
Back E. Abutment	1439+38.27	-16.02	677.38	677.40

GIRDER 8 (EB)

Location	Station	Offset	Theoretical Grade Elevations	Theoretical Grade Elevations Adjusted For Dead Load Deflection and Grinding
Back W. Abutment	1437+03.54	-8.81	677.10	677.12
℄ Brg. W. Abutment	1437+07.29	-8.81	677.12	677.14
A	1437+17.29	-8.81	677.16	677.20
B	1437+27.29	-8.81	677.20	677.26
C	1437+37.29	-8.81	677.24	677.30
D	1437+47.29	-8.81	677.28	677.33
E	1437+57.29	-8.81	677.31	677.35
F	1437+67.29	-8.81	677.35	677.37
℄ Brg. Pier 1	1437+74.29	-8.81	677.37	677.39
G	1437+84.29	-8.81	677.39	677.42
H	1437+94.29	-8.81	677.42	677.46
I	1438+04.29	-8.81	677.44	677.50
J	1438+14.29	-8.81	677.46	677.53
K	1438+24.29	-8.81	677.48	677.54
L	1438+34.29	-8.81	677.50	677.55
M	1438+44.29	-8.81	677.51	677.54
N	1438+54.29	-8.81	677.52	677.54
℄ Brg. Pier 2	1438+59.29	-8.81	677.52	677.54
O	1438+69.29	-8.81	677.53	677.56
P	1438+79.29	-8.81	677.53	677.57
Q	1438+89.29	-8.81	677.54	677.59
R	1438+99.29	-8.81	677.54	677.59
S	1439+09.29	-8.81	677.53	677.58
T	1439+19.29	-8.81	677.53	677.56
℄ Brg. E. Abutment	1439+26.29	-8.81	677.52	677.54
Back E. Abutment	1439+30.04	-8.81	677.52	677.54

GIRDER 9 (EB)

Location	Station	Offset	Theoretical Grade Elevations	Theoretical Grade Elevations Adjusted For Dead Load Deflection and Grinding
Back W. Abutment	1436+95.32	-1.60	677.17	677.19
℄ Brg. W. Abutment	1436+99.07	-1.60	677.19	677.21
A	1437+09.07	-1.60	677.24	677.27
B	1437+19.07	-1.60	677.28	677.33
C	1437+29.07	-1.60	677.32	677.37
D	1437+39.07	-1.60	677.36	677.41
E	1437+49.07	-1.60	677.39	677.43
F	1437+59.07	-1.60	677.43	677.45
℄ Brg. Pier 1	1437+66.07	-1.60	677.45	677.47
G	1437+76.07	-1.60	677.48	677.51
H	1437+86.07	-1.60	677.51	677.55
I	1437+96.07	-1.60	677.53	677.59
J	1438+06.07	-1.60	677.55	677.62
K	1438+16.07	-1.60	677.57	677.63
L	1438+26.07	-1.60	677.59	677.64
M	1438+36.07	-1.60	677.61	677.64
N	1438+46.07	-1.60	677.62	677.64
℄ Brg. Pier 2	1438+51.07	-1.60	677.62	677.64
O	1438+61.07	-1.60	677.63	677.66
P	1438+71.07	-1.60	677.64	677.68
Q	1438+81.07	-1.60	677.64	677.69
R	1438+91.07	-1.60	677.64	677.70
S	1439+01.07	-1.60	677.64	677.69
T	1439+11.07	-1.60	677.64	677.67
℄ Brg. E. Abutment	1439+18.07	-1.60	677.64	677.66
Back E. Abutment	1439+21.82	-1.60	677.63	677.65

GIRDER 10 (EB)

Location	Station	Offset	Theoretical Grade Elevations	Theoretical Grade Elevations Adjusted For Dead Load Deflection and Grinding
Back W. Abutment	1436+87.11	5.60	677.07	677.09
℄ Brg. W. Abutment	1436+90.86	5.60	677.09	677.11
A	1437+00.86	5.60	677.14	677.18
B	1437+10.86	5.60	677.18	677.24
C	1437+20.86	5.60	677.23	677.28
D	1437+30.86	5.60	677.27	677.31
E	1437+40.86	5.60	677.31	677.34
F	1437+50.86	5.60	677.34	677.36
℄ Brg. Pier 1	1437+57.86	5.60	677.36	677.38
G	1437+67.86	5.60	677.40	677.42
H	1437+77.86	5.60	677.43	677.47
I	1437+87.86	5.60	677.45	677.51
J	1437+97.86	5.60	677.48	677.54
K	1438+07.86	5.60	677.50	677.56
L	1438+17.86	5.60	677.52	677.57
M	1438+27.86	5.60	677.53	677.57
N	1438+37.86	5.60	677.55	677.57
℄ Brg. Pier 2	1438+42.86	5.60	677.55	677.57
O	1438+52.86	5.60	677.57	677.59
P	1438+62.86	5.60	677.57	677.61
Q	1438+72.86	5.60	677.58	677.63
R	1438+82.86	5.60	677.58	677.64
S	1438+92.86	5.60	677.58	677.63
T	1439+02.86	5.60	677.58	677.62
℄ Brg. E. Abutment	1439+09.86	5.60	677.58	677.60
Back E. Abutment	1439+13.61	5.60	677.58	677.60

GIRDER 11 (EB)

Location	Station	Offset	Theoretical Grade Elevations	Theoretical Grade Elevations Adjusted For Dead Load Deflection and Grinding
Back W. Abutment	1436+78.88	12.81	676.92	676.94
℄ Brg. W. Abutment	1436+82.63	12.81	676.94	676.96
A	1436+92.63	12.81	676.99	677.03
B	1437+02.63	12.81	677.03	677.09
C	1437+12.63	12.81	677.08	677.13
D	1437+22.63	12.81	677.12	677.17
E	1437+32.63	12.81	677.16	677.20
F	1437+42.63	12.81	677.20	677.22
℄ Brg. Pier 1	1437+49.63	12.81	677.22	677.24
G	1437+59.63	12.81	677.26	677.28
H	1437+69.63	12.81	677.29	677.33
I	1437+79.63	12.81	677.32	677.37
J	1437+89.63	12.81	677.34	677.41
K	1437+99.63	12.81	677.37	677.43
L	1438+09.63	12.81	677.39	677.44
M	1438+19.63	12.81	677.41	677.44
N	1438+29.63	12.81	677.42	677.45
℄ Brg. Pier 2	1438+34.63	12.81	677.43	677.45
O	1438+44.63	12.81	677.44	677.47
P	1438+54.63	12.81	677.46	677.49
Q	1438+64.63	12.81	677.46	677.51
R	1438+74.63	12.81	677.47	677.52
S	1438+84.63	12.81	677.47	677.52
T	1438+94.63	12.81	677.47	677.51
℄ Brg. E. Abutment	1439+01.63	12.81	677.47	677.49
Back E. Abutment	1439+05.38	12.81	677.47	677.49

GIRDER 12 (EB)

Location	Station	Offset	Theoretical Grade Elevations	Theoretical Grade Elevations Adjusted For Dead Load Deflection and Grinding
Back W. Abutment	1436+70.66	20.02	676.73	676.75
℄ Brg. W. Abutment	1436+74.41	20.02	676.75	676.77
A	1436+84.41	20.02	676.80	676.84
B	1436+94.41	20.02	676.85	676.90
C	1437+04.41	20.02	676.90	676.95
D	1437+14.41	20.02	676.94	676.99
E	1437+24.41	20.02	676.98	677.02
F	1437+34.41	20.02	677.02	677.05
℄ Brg. Pier 1	1437+41.41	20.02	677.05	677.07
G	1437+51.41	20.02	677.09	677.11
H	1437+61.41	20.02	677.12	677.16
I	1437+71.41	20.02	677.15	677.21
J	1437+81.41	20.02	677.18	677.24
K	1437+91.41	20.02	677.20	677.27
L	1438+01.41	20.02	677.23	677.28
M	1438+11.41	20.02	677.25	677.28
N	1438+21.41	20.02	677.27	677.29
℄ Brg. Pier 2	1438+26.41	20.02	677.28	677.30
O	1438+36.41	20.02	677.29	677.32
P	1438+46.41	20.02	677.30	677.34
Q	1438+56.41	20.02	677.31	677.36
R	1438+66.41	20.02	677.32	677.37
S	1438+76.41	20.02	677.33	677.37
T	1438+86.41	20.02	677.33	677.36
℄ Brg. E. Abutment	1438+93.41	20.02	677.33	677.35
Back E. Abutment	1438+97.16	20.02	677.33	677.35

NORTH FACE OF PARAPET

Location	Station	Offset	Theoretical Grade Elevations	Theoretical Grade Elevations Adjusted For Grinding
W. End of W. Appr. Slab	1436+85.54	-18.00	676.85	676.87
A1	1436+95.54	-18.00	676.90	676.92
A2	1437+05.54	-18.00	676.94	676.96
E. End of W. Appr. Slab	1437+15.54	-18.00	676.99	677.01

NORTH EDGE OF LANE

Location	Station	Offset	Theoretical Grade Elevations	Theoretical Grade Elevations Adjusted For Grinding
W. End of W. Appr. Slab	1436+78.70	-12.00	676.93	676.95
A1	1436+88.70	-12.00	676.98	677.00
A2	1436+98.70	-12.00	677.03	677.05
E. End of W. Appr. Slab	1437+08.70	-12.00	677.08	677.10

PROFILE GRADE, ℄ ROADWAY & STAGE CONSTRUCTION LINE

Location	Station	Offset	Theoretical Grade Elevations	Theoretical Grade Elevations Adjusted For Grinding
W. End of W. Appr. Slab	1436+65.01	0.00	677.04	677.06
A1	1436+75.01	0.00	677.09	677.11
A2	1436+85.01	0.00	677.15	677.17
E. End of W. Appr. Slab	1436+95.01	0.00	677.20	677.22

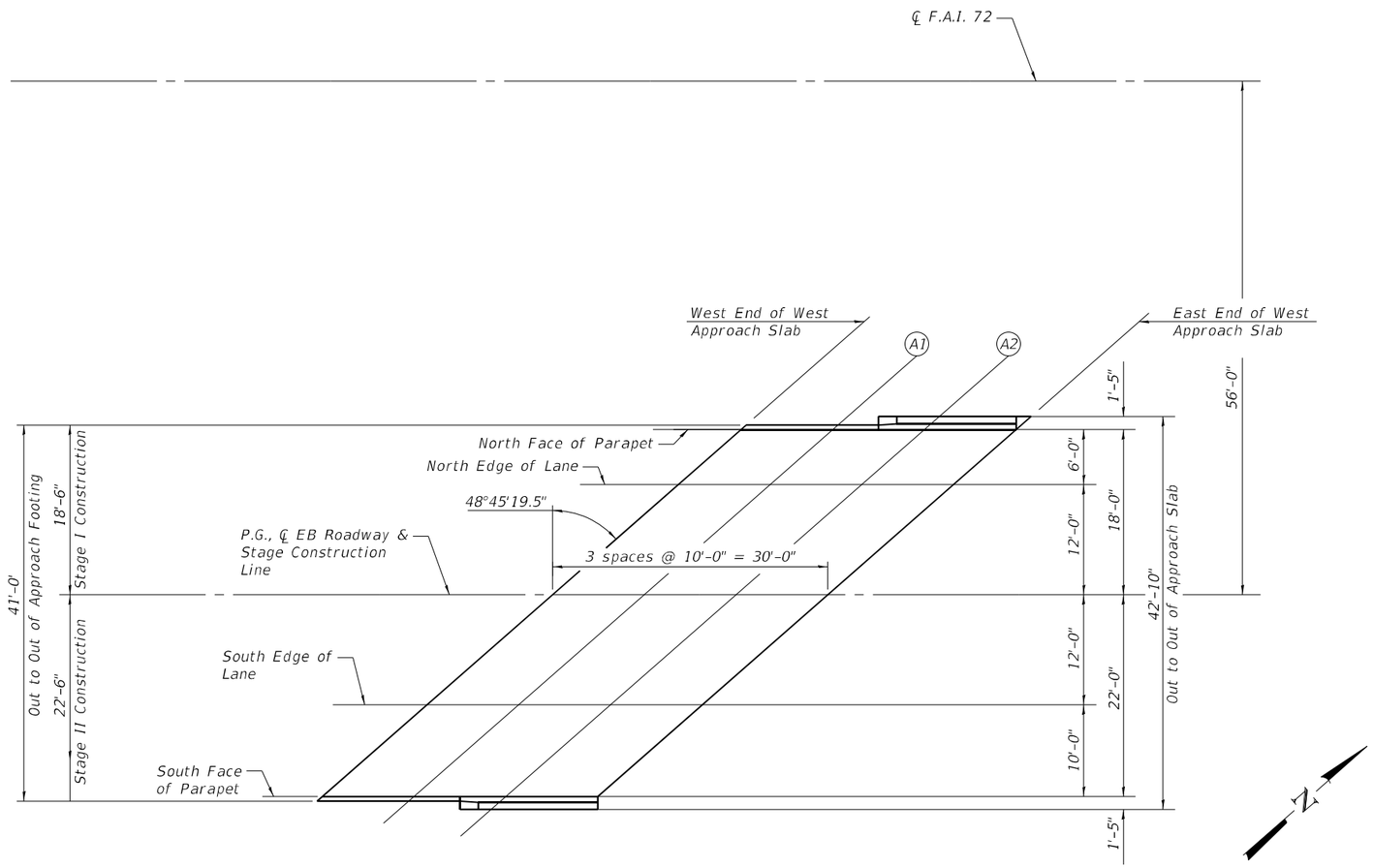

PLAN - WEST APPROACH SLAB

SOUTH EDGE OF LANE

Location	Station	Offset	Theoretical Grade Elevations	Theoretical Grade Elevations Adjusted For Grinding
W. End of W. Appr. Slab	1436+51.32	12.00	676.78	676.80
A1	1436+61.32	12.00	676.84	676.86
A2	1436+71.32	12.00	676.89	676.91
E. End of W. Appr. Slab	1436+81.32	12.00	676.95	676.97

SOUTH FACE OF PARAPET

Location	Station	Offset	Theoretical Grade Elevations	Theoretical Grade Elevations Adjusted For Grinding
W. End of W. Appr. Slab	1436+39.92	22.00	676.51	676.53
A1	1436+49.92	22.00	676.57	676.59
A2	1436+59.92	22.00	676.63	676.65
E. End of W. Appr. Slab	1436+69.92	22.00	676.69	676.71

E-AS1 2-17-2017

NORTH FACE OF PARAPET

Location	Station	Offset	Theoretical Grade Elevations	Theoretical Grade Elevations Adjusted For Grinding
W. End of E. Appr. Slab	1439+39.01	-18.00	677.34	677.36
A3	1439+49.01	-18.00	677.33	677.35
A4	1439+59.01	-18.00	677.32	677.34
E. End of E. Appr. Slab	1439+69.01	-18.00	677.30	677.32

NORTH EDGE OF LANE

Location	Station	Offset	Theoretical Grade Elevations	Theoretical Grade Elevations Adjusted For Grinding
W. End of E. Appr. Slab	1439+32.16	-12.00	677.47	677.49
A3	1439+42.16	-12.00	677.46	677.48
A4	1439+52.16	-12.00	677.45	677.47
E. End of E. Appr. Slab	1439+62.16	-12.00	677.43	677.45

PROFILE GRADE, ℄ EB ROADWAY & STAGE CONSTRUCTION LINE

Location	Station	Offset	Theoretical Grade Elevations	Theoretical Grade Elevations Adjusted For Grinding
W. End of E. Appr. Slab	1439+18.48	0.00	677.66	677.68
A3	1439+28.48	0.00	677.65	677.67
A4	1439+38.48	0.00	677.64	677.66
E. End of E. Appr. Slab	1439+48.48	0.00	677.63	677.65

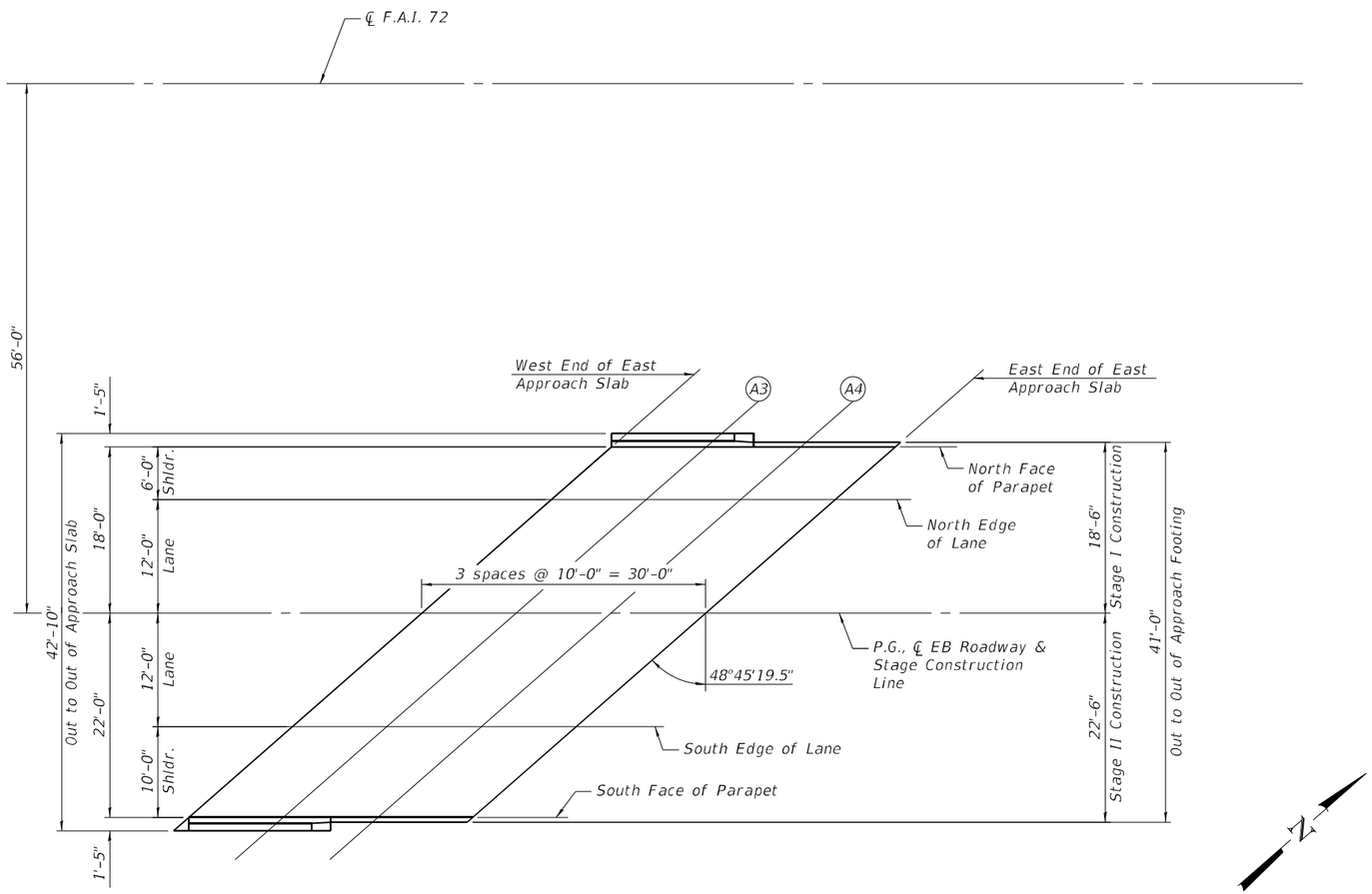

PLAN - EAST APPROACH SLAB

SOUTH EDGE OF LANE

Location	Station	Offset	Theoretical Grade Elevations	Theoretical Grade Elevations Adjusted For Grinding
W. End of E. Appr. Slab	1439+04.79	12.00	677.49	677.51
A3	1439+14.79	12.00	677.48	677.50
A4	1439+24.79	12.00	677.48	677.50
E. End of E. Appr. Slab	1439+34.79	12.00	677.47	677.49

SOUTH FACE OF PARAPET

Location	Station	Offset	Theoretical Grade Elevations	Theoretical Grade Elevations Adjusted For Grinding
W. End of E. Appr. Slab	1438+93.39	22.00	677.29	677.31
A3	1439+03.39	22.00	677.29	677.31
A4	1439+13.39	22.00	677.28	677.30
E. End of E. Appr. Slab	1439+23.39	22.00	677.28	677.30

E-AS1 2-17-2017

NORTH FACE OF PARAPET

Location	Station	Offset	Theoretical Grade Elevations	Theoretical Grade Elevations Adjusted For Grinding
W. End of W. Appr. Slab	1438+17.84	-22.00	677.17	677.19
A1	1438+27.84	-22.00	677.20	677.22
A2	1438+37.84	-22.00	677.23	677.25
E. End of W. Appr. Slab	1438+47.84	-22.00	677.25	677.27

NORTH EDGE OF LANE

Location	Station	Offset	Theoretical Grade Elevations	Theoretical Grade Elevations Adjusted For Grinding
W. End of W. Appr. Slab	1438+06.43	-12.00	677.34	677.36
A1	1438+16.43	-12.00	677.37	677.39
A2	1438+26.43	-12.00	677.40	677.42
E. End of W. Appr. Slab	1438+36.43	-12.00	677.42	677.44

PROFILE GRADE, ℄ ROADWAY & STAGE CONSTRUCTION LINE

Location	Station	Offset	Theoretical Grade Elevations	Theoretical Grade Elevations Adjusted For Grinding
W. End of W. Appr. Slab	1437+92.75	0.00	677.47	677.49
A1	1438+02.75	0.00	677.50	677.52
A2	1438+12.75	0.00	677.54	677.56
E. End of W. Appr. Slab	1438+22.75	0.00	677.57	677.59

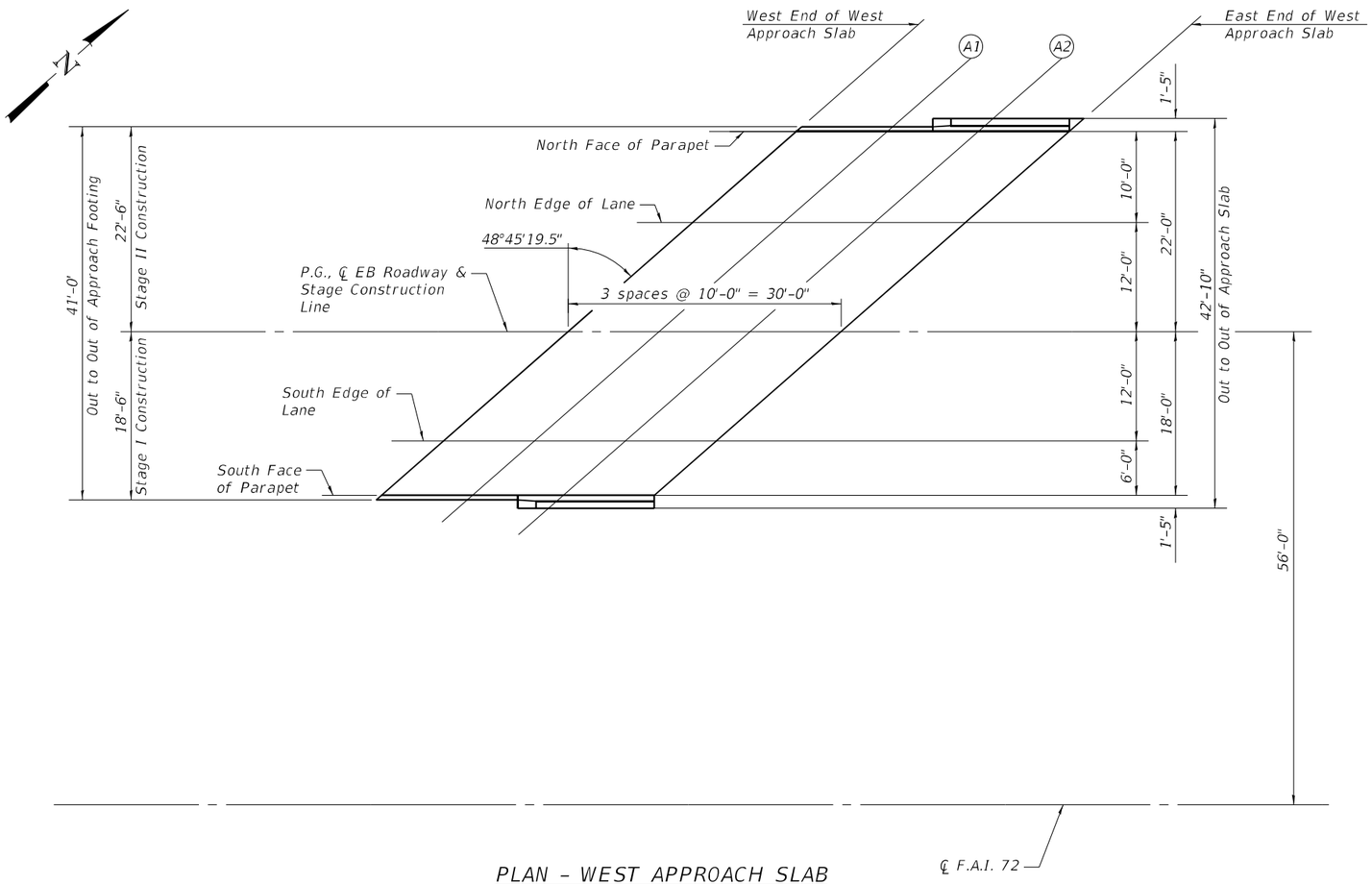

PLAN - WEST APPROACH SLAB

SOUTH EDGE OF LANE

Location	Station	Offset	Theoretical Grade Elevations	Theoretical Grade Elevations Adjusted For Grinding
W. End of W. Appr. Slab	1437+79.06	12.00	677.23	677.25
A1	1437+89.06	12.00	677.27	677.29
A2	1437+99.06	12.00	677.31	677.33
E. End of W. Appr. Slab	1438+09.06	12.00	677.34	677.36

SOUTH FACE OF PARAPET

Location	Station	Offset	Theoretical Grade Elevations	Theoretical Grade Elevations Adjusted For Grinding
W. End of W. Appr. Slab	1437+72.22	18.00	677.08	677.10
A1	1437+82.22	18.00	677.13	677.15
A2	1437+92.22	18.00	677.16	677.18
E. End of W. Appr. Slab	1438+02.22	18.00	677.20	677.22

E-AS1 2-17-2017

NORTH FACE OF PARAPET

Location	Station	Offset	Theoretical Grade Elevations	Theoretical Grade Elevations Adjusted For Grinding
W. End of E. Appr. Slab	1440+71.30	-22.00	677.05	677.07
A3	1440+81.30	-22.00	677.00	677.02
A4	1440+91.30	-22.00	676.96	676.98
E. End of E. Appr. Slab	1441+01.30	-22.00	676.91	676.93

NORTH EDGE OF LANE

Location	Station	Offset	Theoretical Grade Elevations	Theoretical Grade Elevations Adjusted For Grinding
W. End of E. Appr. Slab	1440+59.90	-12.00	677.29	677.31
A3	1440+69.90	-12.00	677.25	677.27
A4	1440+79.90	-12.00	677.21	677.23
E. End of E. Appr. Slab	1440+89.90	-12.00	677.16	677.18

PROFILE GRADE, ℄ EB ROADWAY & STAGE CONSTRUCTION LINE

Location	Station	Offset	Theoretical Grade Elevations	Theoretical Grade Elevations Adjusted For Grinding
W. End of E. Appr. Slab	1440+46.21	0.00	677.52	677.54
A3	1440+56.21	0.00	677.48	677.50
A4	1440+66.21	0.00	677.45	677.47
E. End of E. Appr. Slab	1440+76.21	0.00	677.41	677.43

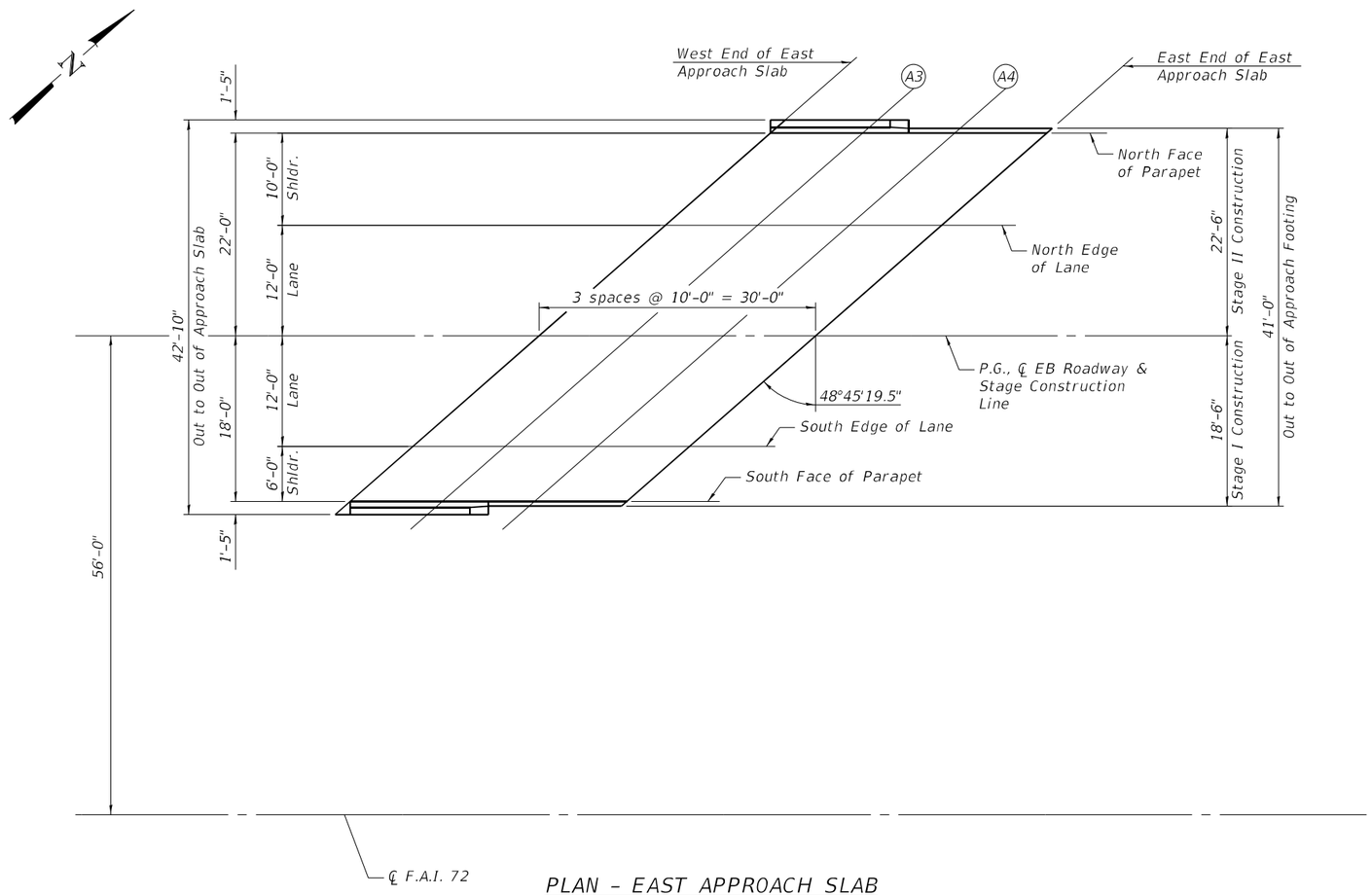

PLAN - EAST APPROACH SLAB

SOUTH EDGE OF LANE

Location	Station	Offset	Theoretical Grade Elevations	Theoretical Grade Elevations Adjusted For Grinding
W. End of E. Appr. Slab	1440+32.53	12.00	677.38	677.40
A3	1440+42.53	12.00	677.35	677.37
A4	1440+52.53	12.00	677.32	677.34
E. End of E. Appr. Slab	1440+62.53	12.00	677.28	677.30

SOUTH FACE OF PARAPET

Location	Station	Offset	Theoretical Grade Elevations	Theoretical Grade Elevations Adjusted For Grinding
W. End of E. Appr. Slab	1440+25.68	18.00	677.28	677.30
A3	1440+35.68	18.00	677.25	677.27
A4	1440+45.68	18.00	677.22	677.24
E. End of E. Appr. Slab	1440+55.68	18.00	677.19	677.21

E-AS1

2-17-2017

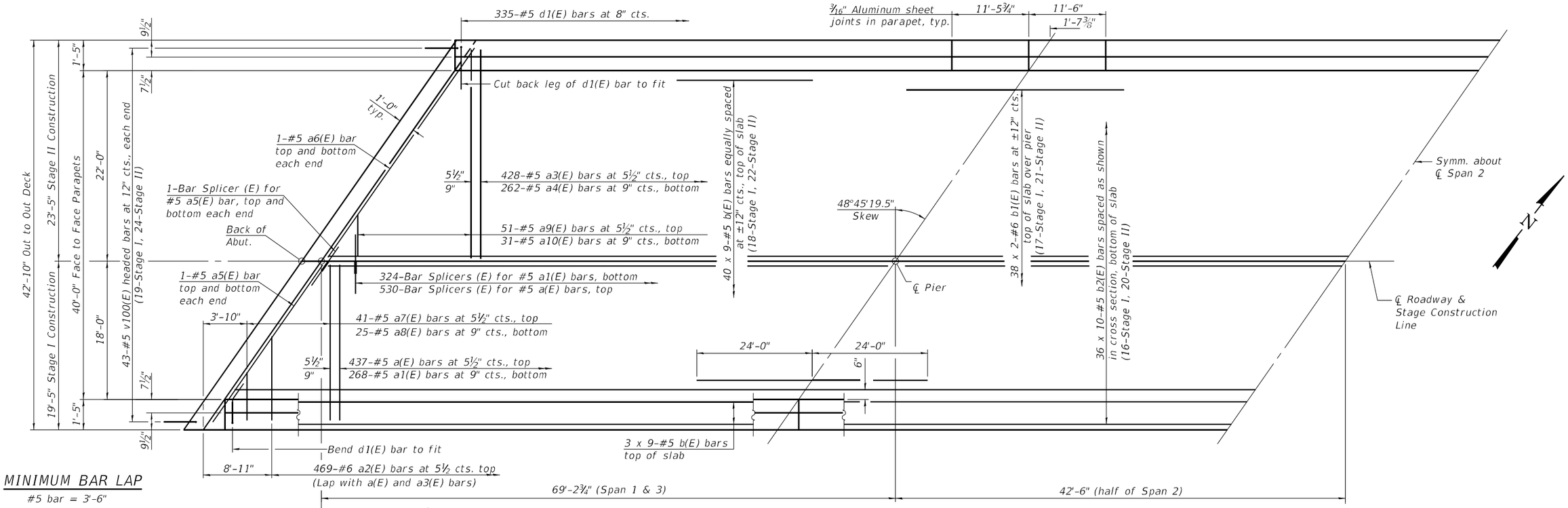

MINIMUM BAR LAP

#5 bar = 3'-6"

* See Field Cutting Diagram on sheet 28 of 49.

** Prior to grinding

PARTIAL PLAN

Notes:

See sheet 28 of 49 for superstructure details and Bill of Material.

Bars indicated thus 20 x 3-#5 etc. indicates 20 lines of bars with 3 lengths per line.

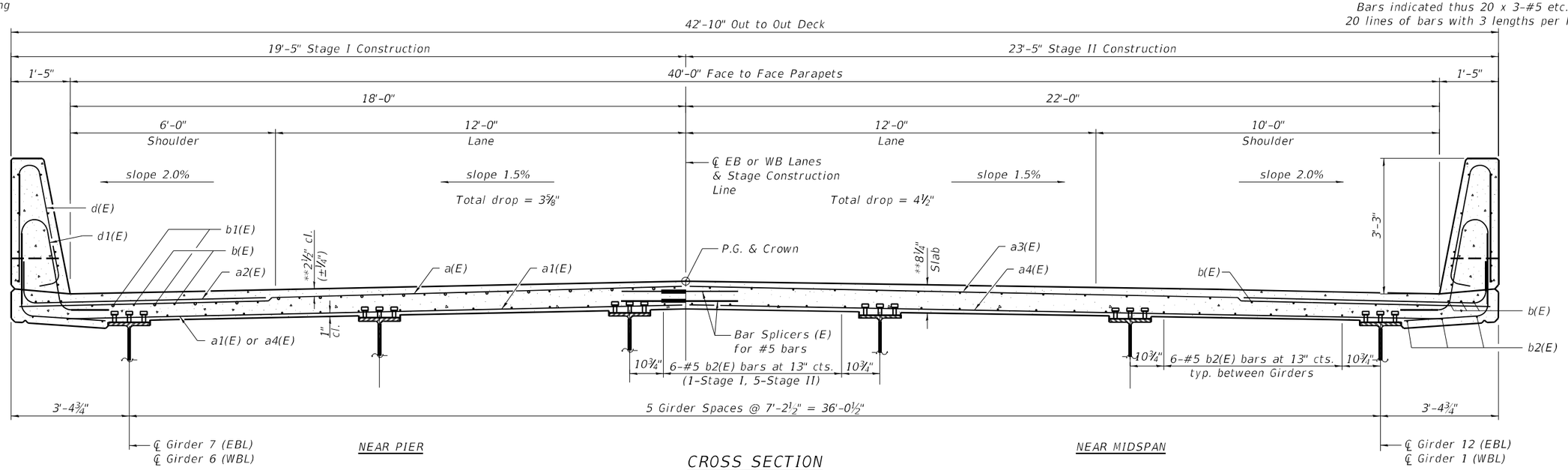

CROSS SECTION

(Looking East EBL)
(Looking West WBL)

SI-SB-2-L(>30°) 6-15-2019

CEC Cummins Engineering Corporation — ENGINEERS & SURVEYORS	JOB = 2564.3	DESIGNED - AAN	REVISED -	STATE OF ILLINOIS DEPARTMENT OF TRANSPORTATION	SUPERSTRUCTURE STRUCTURE NO. 074-0069 (EB) AND 074-0070 (WB)
	FILE = 0740069_0070-70024-027.028-Super.dgn	CHECKED - MDC	REVISED -		
	DATE = 3/10/2025	DRAWN - TSH	REVISED -		
		CHECKED - MDC	REVISED -		SHEET NO. 27 OF 49 SHEETS

F.A.I.	SECTION	COUNTY	TOTAL SHEETS	SHEET NO.
72	(74-68VB)B	PIATT	93	63
		CONTRACT NO. 70024		
	ILLINOIS FED. AID PROJECT			

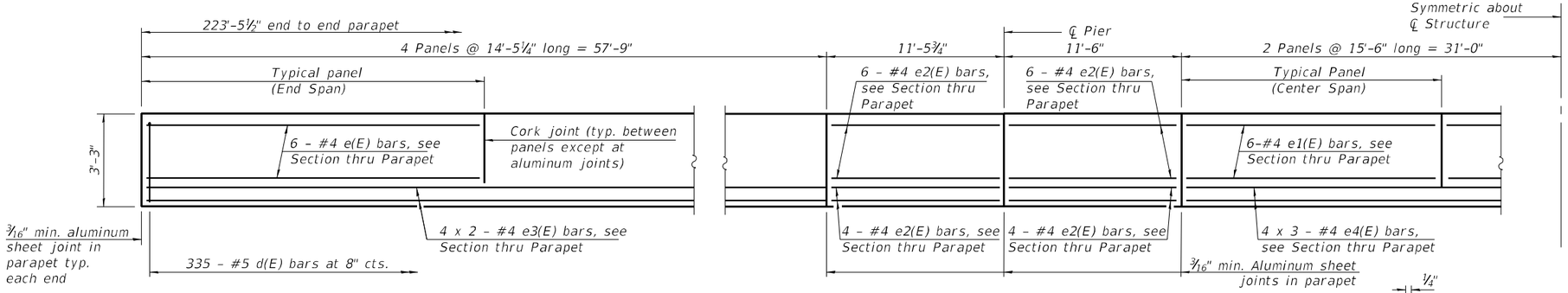

INSIDE ELEVATION OF PARAPET

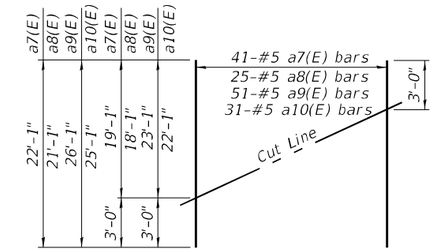

FIELD CUTTING DIAGRAM

Order a7(E) thru a10(E) bars full length. Cut as shown and use remainder of bars in opposite end of deck.

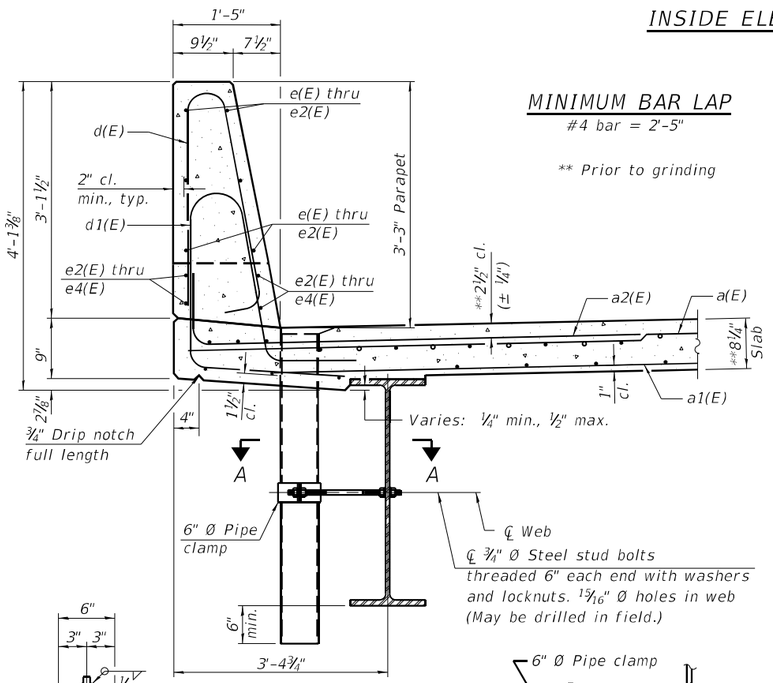

MINIMUM BAR LAP

#4 bar = 2'-5"

** Prior to grinding

SECTION THRU PARAPET

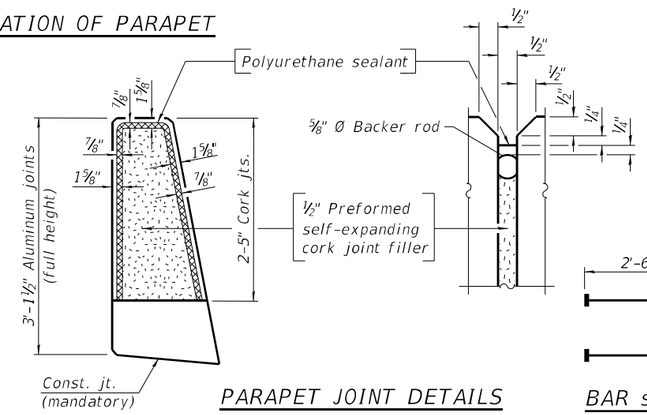

PARAPET JOINT DETAILS

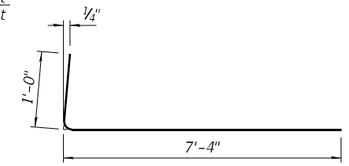

BAR a2(E)

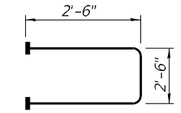

BAR s10(E)

(Headed. 312-#5 Bar Terminators)

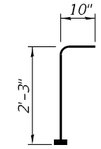

BAR v100(E)

(Headed. 172-#5 Bar Terminators)

Notes:

Fiberglass pipe shall conform to ASTM D2996, with short-time rupture strength hoop tensile stress of 30,000 p.s.i. minimum.

The top portion of aluminum floor drains shall be coated with 5 mils of either bitumen paint or epoxy paint to minimize reaction with wet concrete.

The clamping device shall be galvanized according to AASHTO M 232. Cost of clamping device included with Floor Drains.

The 3/16" min. aluminum sheet shall be ASTM B 209 alloy 3003-H14 and coated with 5 mils of either bitumen paint or epoxy paint to minimize reaction with wet concrete. Cost included with Concrete Superstructure.

The polyurethane sealant shall be according to Article 1050.04 of the Std. Spec. and the color shall be gray.

Exterior surfaces of floor drains below deck shall be pigmented or painted to match the color of the adjacent beam.

Bar Terminators paid for seperatly. See Total Bill of Material.

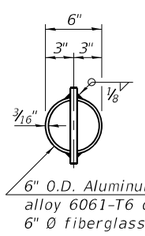

TOP PLAN

(Showing aluminum tube)

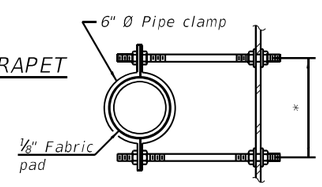

SECTION A-A

*Dimension as required by pipe clamp

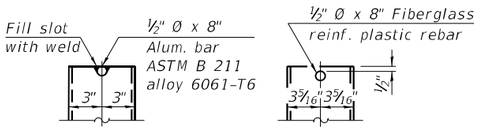

ALUMINUM TUBE

FIBERGLASS PIPE

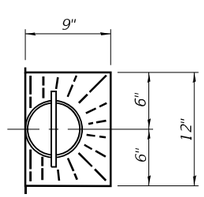

TOP PLAN

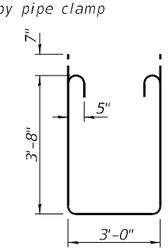

BAR s11(E)

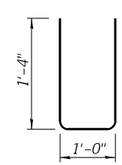

BAR s12(E)

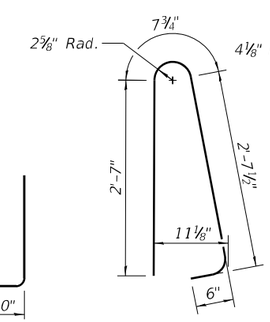

BAR d(E)

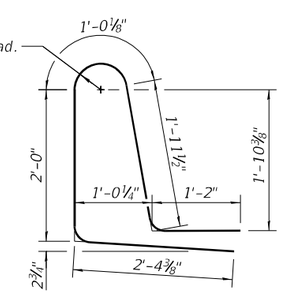

BAR d1(E)

S.N. 074-0069 (EB) BILL OF MATERIAL

Bar	No.	Size	Length	Shape
a(E)	437	#5	19'-1"	
a1(E)	268	#5	18'-0"	
a2(E)	938	#6	8'-4"	
a3(E)	428	#5	23'-1"	
a4(E)	262	#5	22'-0"	
a5(E)	4	#5	28'-6"	
a6(E)	4	#5	34'-6"	
a7(E)	41	#5	22'-1"	
a8(E)	25	#5	21'-1"	
a9(E)	51	#5	26'-1"	
a10(E)	31	#5	25'-1"	
b(E)	414	#5	28'-0"	
b1(E)	152	#6	26'-0"	
b2(E)	360	#5	25'-6"	
d(E)	670	#5	6'-5"	
d1(E)	670	#5	6'-8"	
e(E)	96	#4	14'-1"	
e1(E)	48	#4	15'-2"	
e2(E)	80	#4	11'-2"	
e3(E)	32	#4	30'-0"	
e4(E)	196	#4	22'-2"	
m10(E)	12	#6	26'-6"	
m11(E)	40	#6	10'-5"	
m12(E)	20	#6	2'-3"	
m13(E)	12	#6	32'-7"	
m14(E)	4	#4	26'-6"	
m15(E)	4	#4	32'-7"	
s10(E)	78	#5	7'-6"	
s11(E)	78	#5	11'-6"	
s12(E)	78	#4	3'-8"	
v100(E)	86	#5	3'-1"	
Reinforcement Bars, Epoxy Coated			Lbs.	91,810
Concrete Superstructure			Cu. Yds.	360.4

S.N. 074-0070 (WB) BILL OF MATERIAL

Bar	No.	Size	Length	Shape
a(E)	437	#5	19'-1"	
a1(E)	268	#5	18'-0"	
a2(E)	938	#6	8'-4"	
a3(E)	428	#5	23'-1"	
a4(E)	262	#5	22'-0"	
a5(E)	4	#5	28'-6"	
a6(E)	4	#5	34'-6"	
a7(E)	41	#5	22'-1"	
a8(E)	25	#5	21'-1"	
a9(E)	51	#5	26'-1"	
a10(E)	31	#5	25'-1"	
b(E)	414	#5	28'-0"	
b1(E)	152	#6	26'-0"	
b2(E)	360	#5	25'-6"	
d(E)	670	#5	6'-5"	
d1(E)	670	#5	6'-8"	
e(E)	96	#4	14'-1"	
e1(E)	48	#4	15'-2"	
e2(E)	80	#4	11'-2"	
e3(E)	32	#4	30'-0"	
e4(E)	196	#4	22'-2"	
m10(E)	12	#6	26'-6"	
m11(E)	40	#6	10'-5"	
m12(E)	20	#6	2'-3"	
m13(E)	12	#6	32'-7"	
m14(E)	4	#4	26'-6"	
m15(E)	4	#4	32'-7"	
s10(E)	78	#5	7'-6"	
s11(E)	78	#5	11'-6"	
s12(E)	78	#4	3'-8"	
v100(E)	86	#5	3'-1"	
Reinforcement Bars, Epoxy Coated			Lbs.	91,810
Concrete Superstructure			Cu. Yds.	360.4

Bars indicated thus 1 x 2-#4 etc. indicates 1 line of bars with 2 lengths per line.

SDI-SB-2 6-15-2019

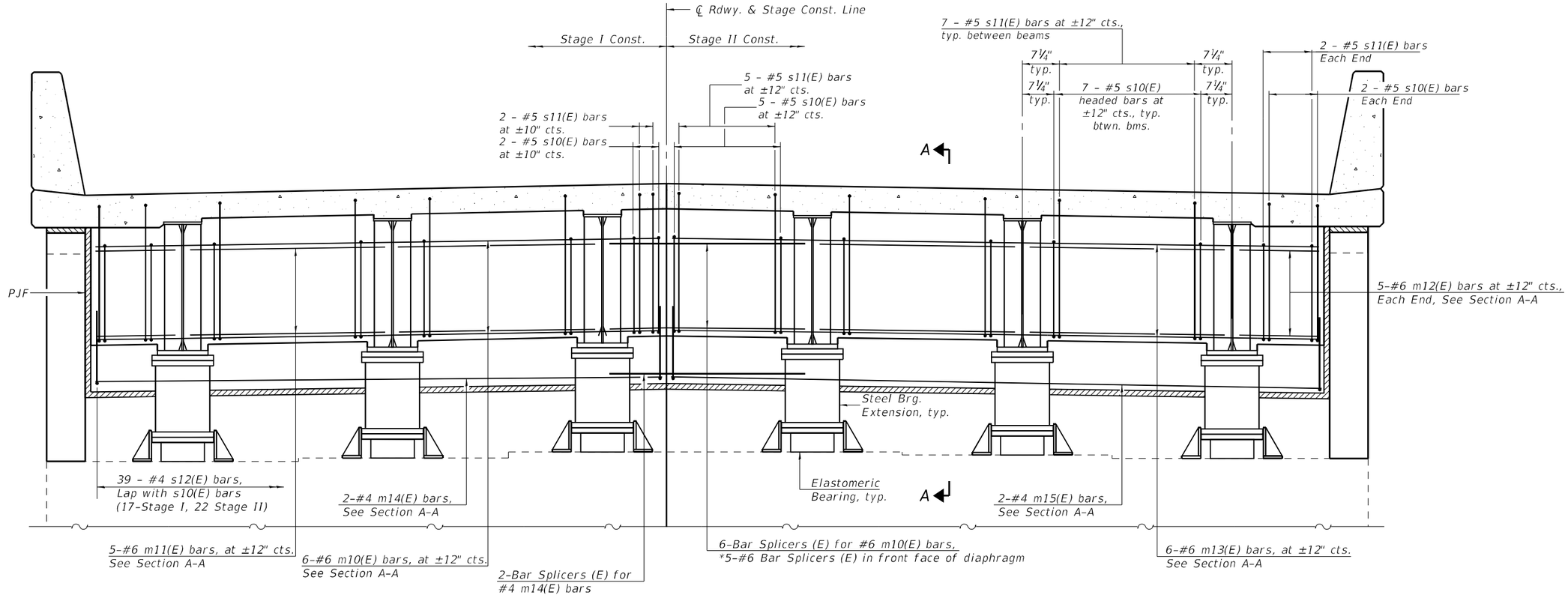

DIAPHRAGM AT ABUTMENT

(W. Abut. WB/E. Abut. EB shown,
E. Abut. WB/W. Abut. EB similar)
(Looking West-W. Abut. WB,
Looking East-E. Abut. EB)

* See Sheet 48 of 49 for detail of bar splicer in front face of diaphragm.

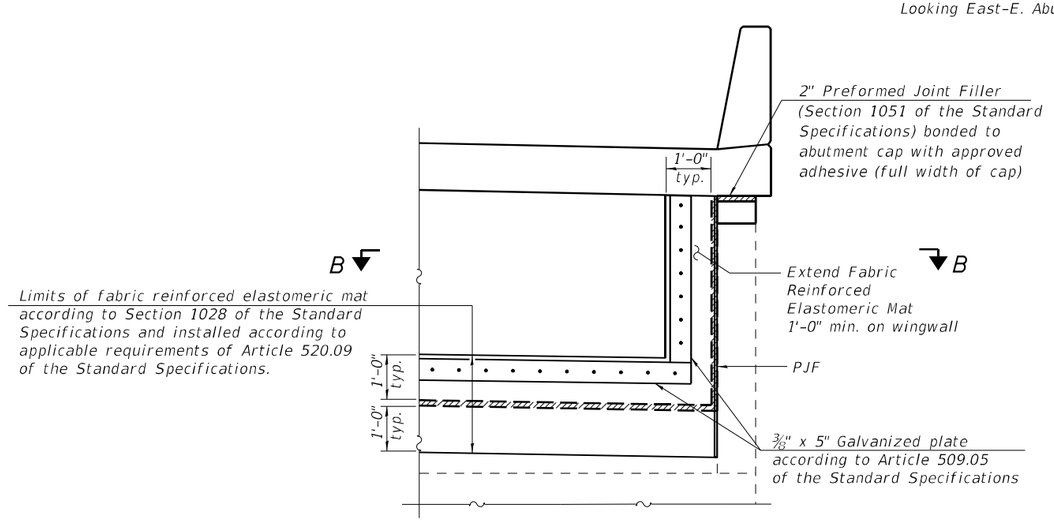

ELEVATION

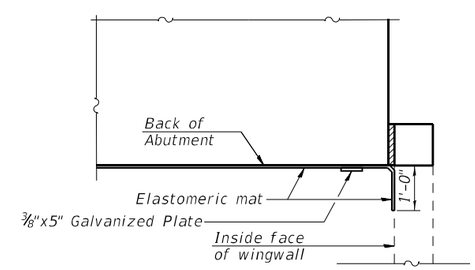

SECTION B-B

Notes:
See sheet 28 of 49 for superstructure details and Bill of Material.
See sheet 30 of 49 for Section A-A.
The s10(E), s11(E) and s12(E) bars shall be placed parallel to the beams. Spacing for these bars shall be at right angles to the beams.
Cost of fabric reinforced elastomeric mat, galvanized plate, stainless steel expansion bolts with nuts and washers and installation are included in the cost of Concrete Superstructure.

CEC Cummins Engineering Corporation ENGINEERS & SURVEYORS	JOB = 2564.3	DESIGNED - AAN	REVISED -
	FILE = 0740069.0070-70024-029.030-Diaph.dgn	CHECKED - MDC	REVISED -
	DATE = 3/10/2025	DRAWN - TSH	REVISED -
		CHECKED - MDC	REVISED -

STATE OF ILLINOIS
DEPARTMENT OF TRANSPORTATION

DIAPHRAGM DETAILS
STRUCTURE NO. 074-0069 (EB) AND 074-0070 (WB)
SHEET NO. 29 OF 49 SHEETS

F.A.I.	SECTION	COUNTY	TOTAL SHEETS	SHEET NO.
72	(74-68VB)B	PIATT	93	65
		CONTRACT NO. 70024		
	ILLINOIS FED. AID PROJECT			

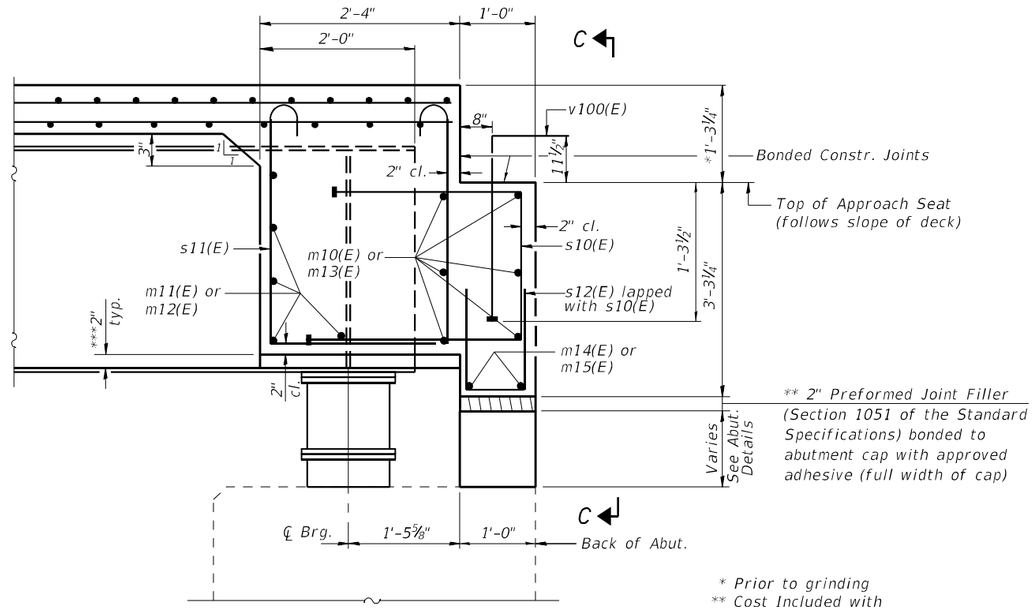

* Prior to grinding
** Cost Included with Concrete Superstructure
*** Diaphragm concrete within beam flange drops to top of bottom flange

SECTION A-A

Dimensions at right angles to abutment, except as shown.

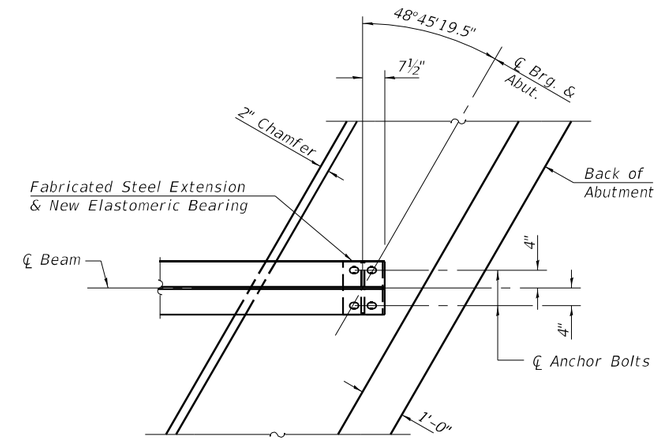

PLAN AT ABUTMENT

(Showing bottom flange of beam)

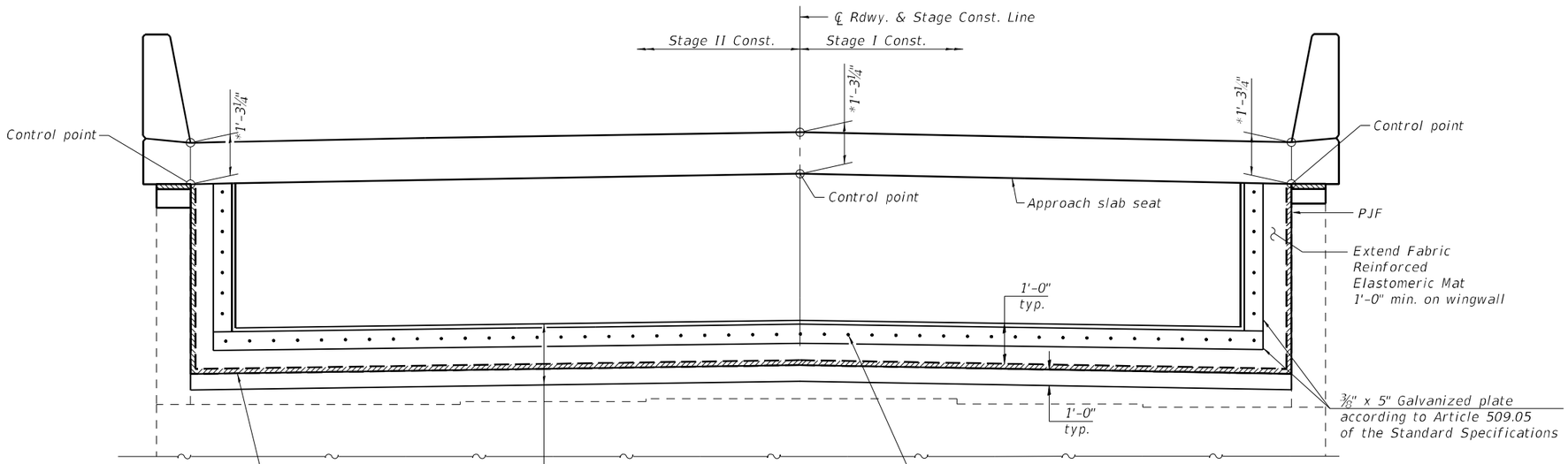

VIEW C-C

Notes:

See sheet 28 of 49 for superstructure details and Bill of Material.

See sheets 41 and 42 of 49 for abutment back wall reinforcement details and bill of material.

The approach slab seat shall have a constant slope determined from the control points shown.

CEC Cummins Engineering Corporation — ENGINEERS & SURVEYORS	JOB = 2564.3	DESIGNED - AAN	REVISED -	STATE OF ILLINOIS DEPARTMENT OF TRANSPORTATION	DIAPHRAGM DETAILS STRUCTURE NO. 074-0069 (EB) AND 074-0070 (WB)	F.A.I.	SECTION	COUNTY	TOTAL SHEETS	SHEET NO.
	FILE = 0740069_0070-70024-029.030-Diaph.dgn	CHECKED - MDC	REVISED -			72	(74-68VB)B	PIATT	93	66
	DATE = 3/10/2025	DRAWN - TSH	REVISED -					CONTRACT NO. 70024		
		CHECKED - MDC	REVISED -		SHEET NO. 30 OF 49 SHEETS		ILLINOIS	FED. AID PROJECT		

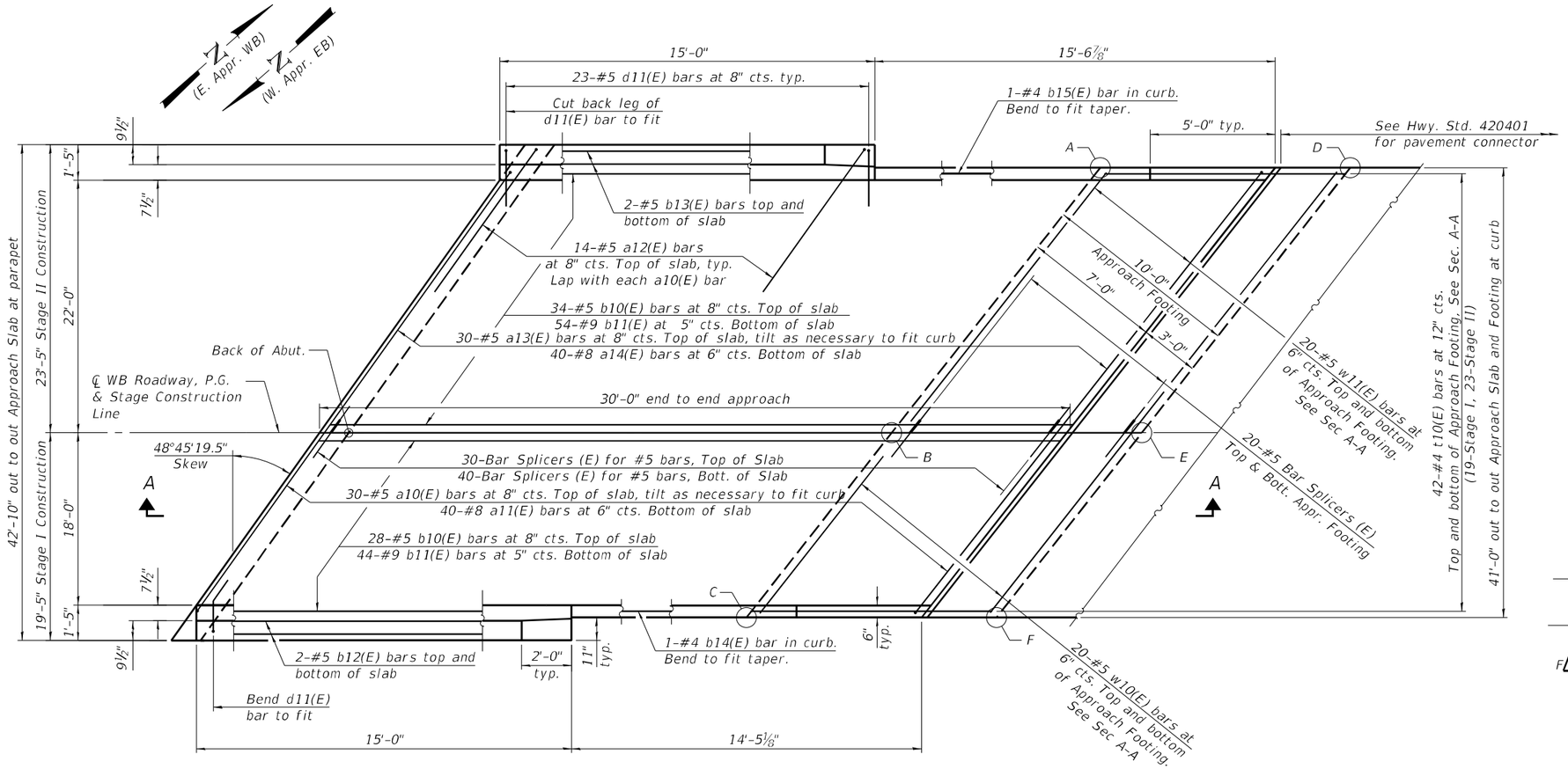

PLAN

(E. Appr. WB/W. Appr. EB Shown, W. Appr. WB/E. Appr. EB similar

TOP AND BOTTOM ELEVATIONS FOR APPROACH FOOTING

West Approach (WB)			East Approach (WB)		
Point/ Location	Top	Bottom	Point/ Location	Top	Bottom
A	675.93	675.10	A	675.67	674.84
B	676.23	675.40	B	676.17	675.34
C	675.84	675.01	C	675.94	675.11
D	675.88	675.05	D	675.59	674.76
E	676.19	675.36	E	676.11	675.28
F	675.77	674.94	F	675.89	675.06

West Approach (EB)			East Approach (EB)		
Point/ Location	Top	Bottom	Point/ Location	Top	Bottom
A	675.61	674.78	A	676.05	675.22
B	675.81	674.98	B	676.39	675.56
C	675.28	674.45	C	676.02	675.19
D	675.54	674.71	D	676.02	675.19
E	675.73	674.90	E	676.37	675.54
F	675.18	674.35	F	676.01	675.18

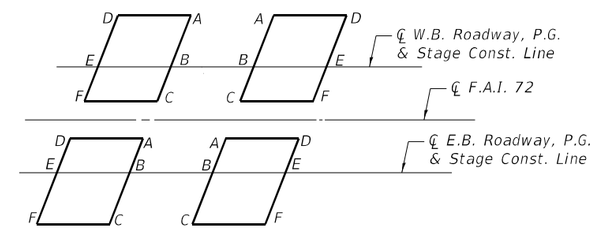

APPROACH FOOTING LAYOUT

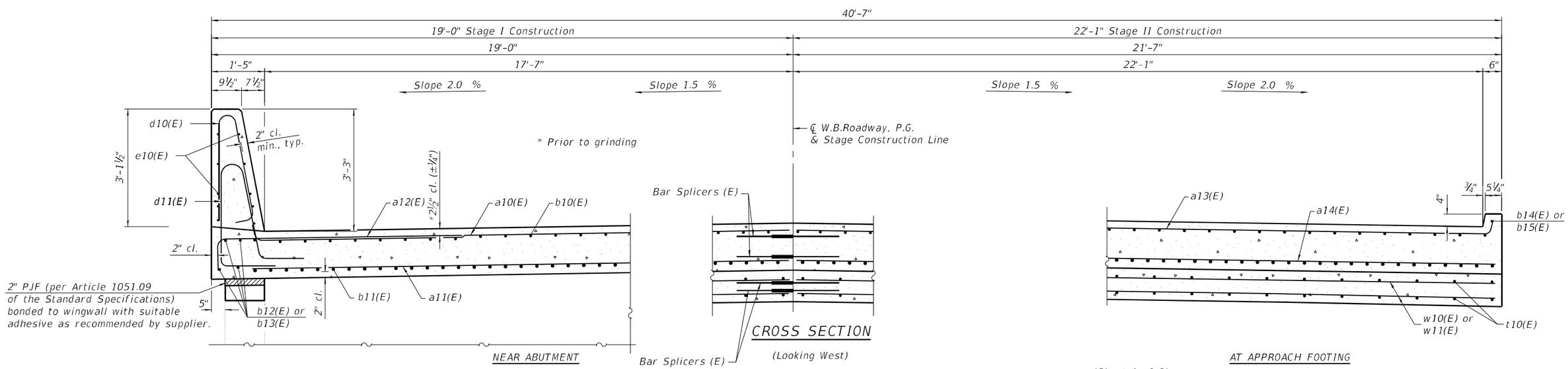

(Sheet 1 of 2)

CEC Cummins Engineering Corporation — ENGINEERS & SURVEYORS	JOB = 2564.3	DESIGNED - AAN	REVISED -
	FILE = 0740069.0070-70024-031.032-App-Slabs.dgn	CHECKED - MDC	REVISED -
	DATE = 3/12/2025	DRAWN - TSH	REVISED -
		CHECKED - MDC	REVISED -

STATE OF ILLINOIS
DEPARTMENT OF TRANSPORTATION

BRIDGE APPROACH SLAB DETAILS
STRUCTURE NO. 074-0070 (WB)

SHEET NO. 31 OF 49 SHEETS

F.A.I.	SECTION	COUNTY	TOTAL SHEETS	SHEET NO.
72	(74-68VB)B	PIATT	93	67
		CONTRACT NO. 70024		
	ILLINOIS FED. AID PROJECT			

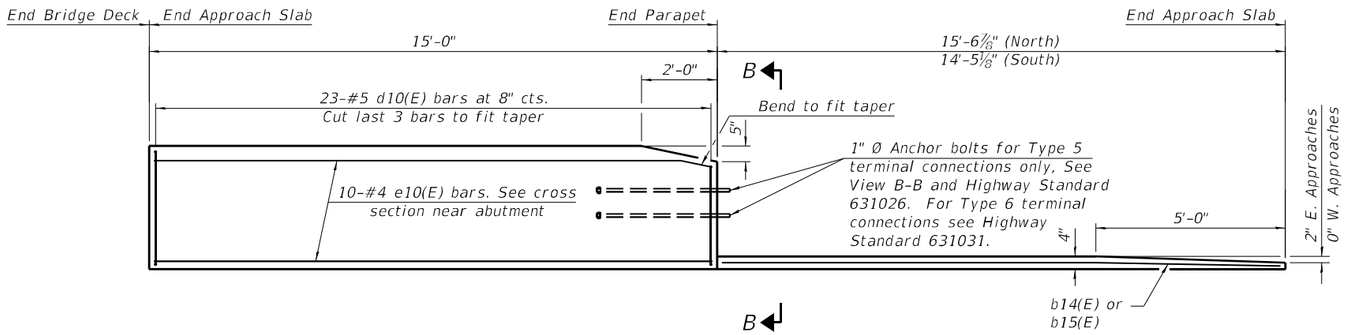

INSIDE ELEVATION OF PARAPET AND CURB

Notes:

The joint opening shall be adjusted for temperature per Article 520.04 of the Standard Specifications. However, since this detail is for jointless structures, the length of bridge used to calculate the adjustment shall be equal to half the total bridge length plus the length of the bridge approach slab.

Parapet concrete shall be paid for as Concrete Superstructure.

Approach slab shall be paid for as Concrete Superstructure (Approach Slab).

Approach footing concrete shall be paid for as Concrete Structures.

The approach footing maximum applied service bearing pressure (Qmax) = 2.0 ksf.

Cost of excavation for approach footing included with Concrete Structures.

For Granular Backfill for Structures and drainage treatment details, see sheet 2 of 49.

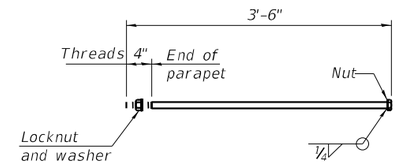

** 1" Ø ANCHOR BOLT

(Anchor bolt assemblies shall be galvanized according to Article 1006.09 of the Standard Specifications)

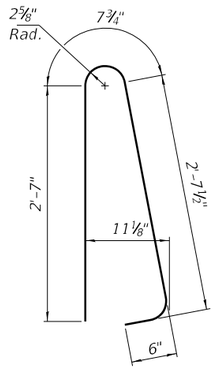

BAR d10(E)

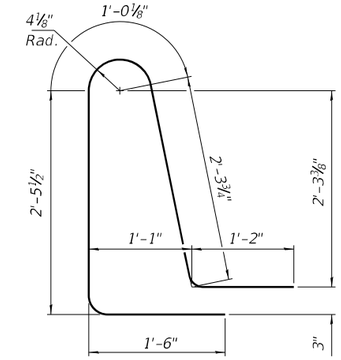

BAR d11(E)

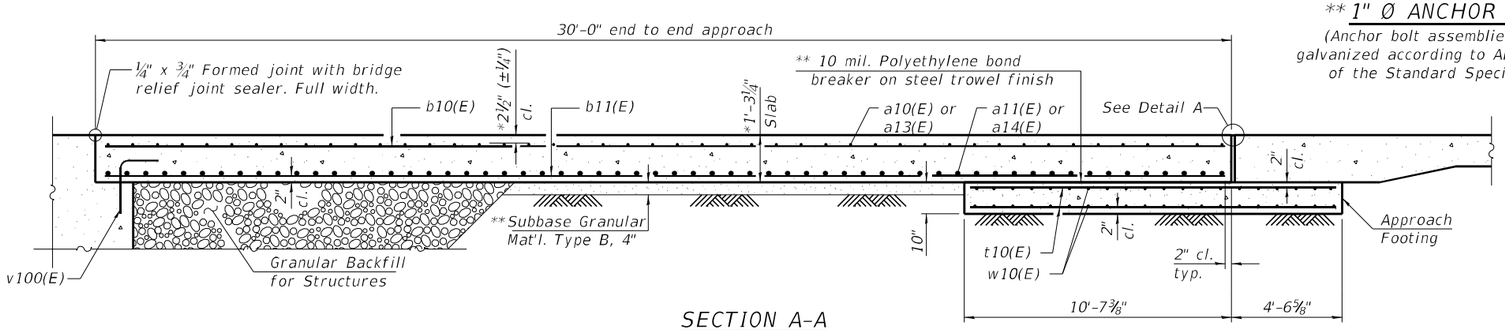

SECTION A-A

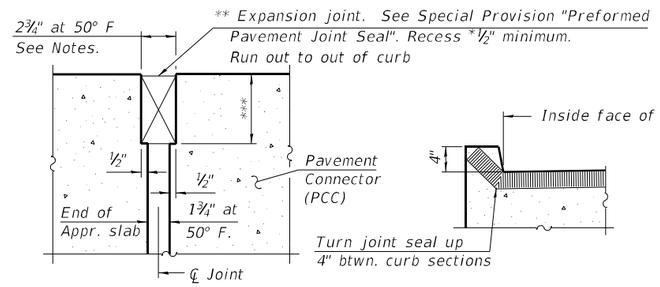

DETAIL A

(at Rt. L's)

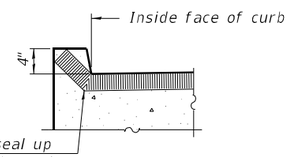

END OF SEAL

(At West approaches only)

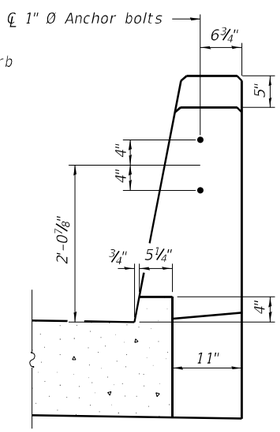

VIEW B-B

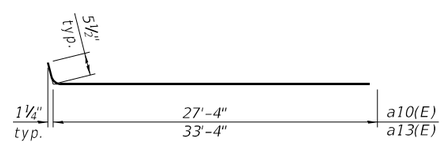

BARS a10(E) & a13(E)

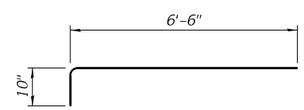

BAR a12(E)

* Prior to grinding

** Cost included with Concrete Superstructure (Approach Slab).

*** Per manufacturer recommendations

S.N. 074-0069 (EB)

BILL OF MATERIAL

Bar	No.	Size	Length	Shape
a10(E)	60	#5	27'-10"	
a11(E)	80	#8	27'-5"	
a12(E)	56	#5	7'-4"	
a13(E)	60	#5	33'-10"	
a14(E)	80	#8	33'-5"	
b10(E)	124	#5	29'-8"	
b11(E)	196	#9	29'-8"	
b12(E)	8	#5	14'-9"	
b13(E)	8	#5	14'-4"	
b14(E)	2	#4	14'-3"	
b15(E)	2	#4	14'-10"	
d10(E)	92	#5	6'-5"	
d11(E)	92	#5	8'-6"	
e10(E)	40	#4	14'-8"	
t10(E)	84	#4	14'-8"	
w10(E)	40	#5	27'-6"	
w11(E)	40	#5	33'-7"	
Concrete Superstructure			Cu. Yd.	7.8
Concrete Superstructure (Approach Slab)			Cu. Yd.	119.0
Concrete Structures			Cu. Yd.	38.2
Reinforcement Bars, Epoxy Coated			Pound	46,370

S.N. 074-0070 (WB)

BILL OF MATERIAL

Bar	No.	Size	Length	Shape
a10(E)	60	#5	27'-10"	
a11(E)	80	#8	27'-5"	
a12(E)	56	#5	7'-4"	
a13(E)	60	#5	33'-10"	
a14(E)	80	#8	33'-5"	
b10(E)	124	#5	29'-8"	
b11(E)	196	#9	29'-8"	
b12(E)	8	#5	14'-9"	
b13(E)	8	#5	14'-4"	
b14(E)	2	#4	14'-3"	
b15(E)	2	#4	14'-10"	
d10(E)	92	#5	6'-5"	
d11(E)	92	#5	8'-6"	
e10(E)	40	#4	14'-8"	
t10(E)	84	#4	14'-8"	
w10(E)	40	#5	27'-6"	
w11(E)	40	#5	33'-7"	
Concrete Superstructure			Cu. Yd.	7.8
Concrete Superstructure (Approach Slab)			Cu. Yd.	119.0
Concrete Structures			Cu. Yd.	38.2
Reinforcement Bars, Epoxy Coated			Pound	46,370

BAIA-CIP-39CS-L(>30°) 10-12-2021

(Sheet 2 of 2)

CEC Cummins Engineering Corporation — ENGINEERS & SURVEYORS

JOB = 2564.3	DESIGNED - AAN	REVISED -	
FILE = 0740069.0070-70024-031.032-App-Slabs.dgn	CHECKED - MDC	REVISED -	
DATE = 4/11/2025	DRAWN - TSH	REVISED -	
	CHECKED - MDC	REVISED -	

STATE OF ILLINOIS
DEPARTMENT OF TRANSPORTATION

BRIDGE APPROACH SLAB DETAILS
STRUCTURE NO. 074-0069 (EB) AND 074-0070 (WB)

SHEET NO. 32 OF 49 SHEETS

F.A.I.	SECTION	COUNTY	TOTAL SHEETS	SHEET NO.
72	(74-68VB)B	PIATT	93	68

CONTRACT NO. 70024

ILLINOIS FED. AID PROJECT

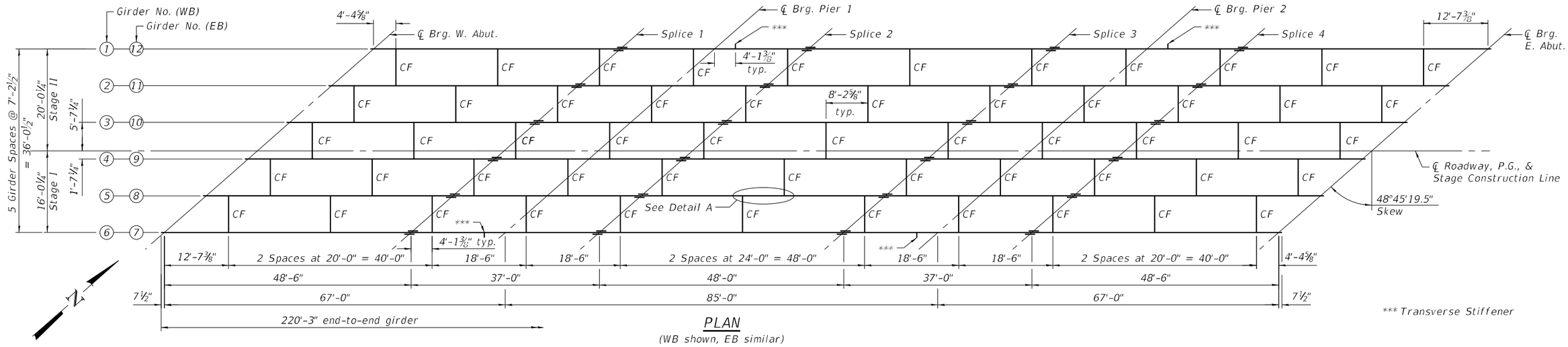

PLAN

(WB shown, EB similar)

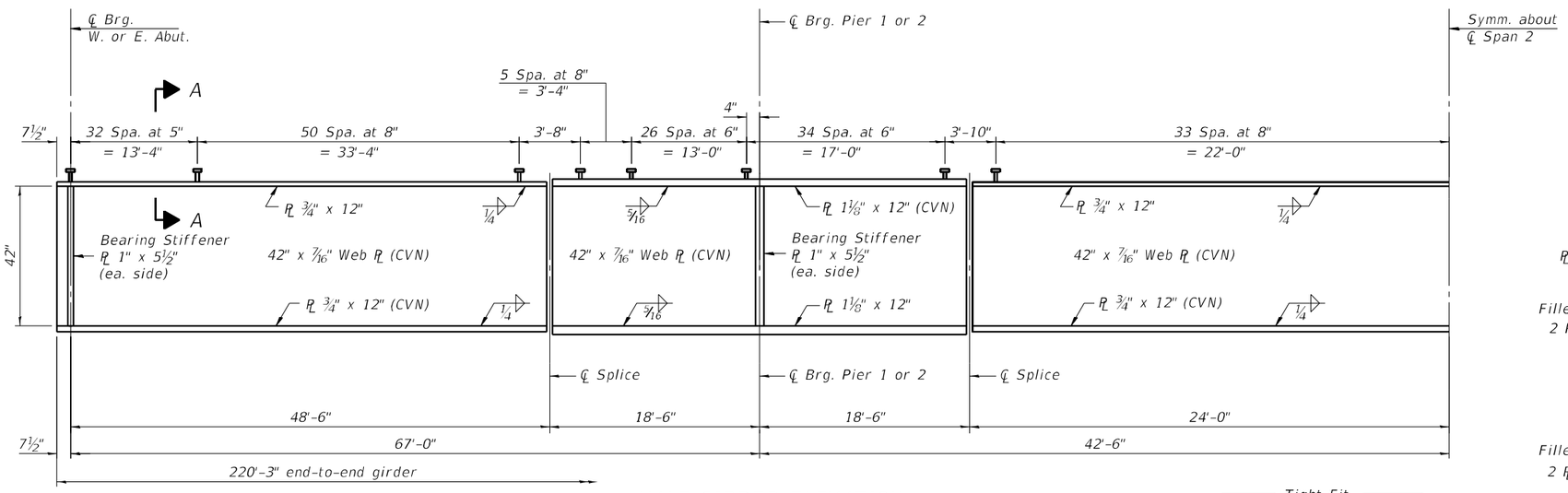

HALF GIRDER ELEVATION

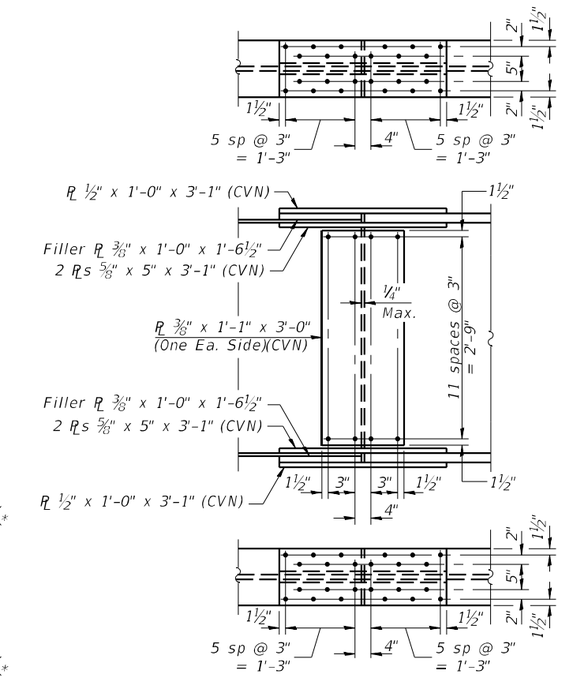

FIELD SPLICE DETAIL

(48 Required)

Notes:

All cross frames or diaphragms between beams or girders shall be installed with erection pins and bolts in accordance with the erection plan approved by the Engineer. Individual cross frames or diaphragms at supports may be temporarily disconnected to install bearing anchor bolts.

Load carrying components designated "CVN" shall conform to the Charpy-VNotch Impact Energy Requirement, Zone 2.

See Sheet 34 of 49 for Detail A.

All steel shall be AASHTO M270 Grade 50.

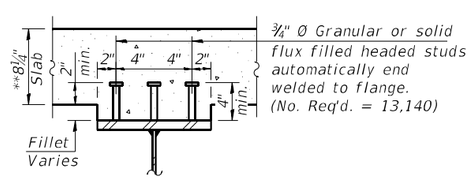

SECTION A-A

** Prior to grinding.

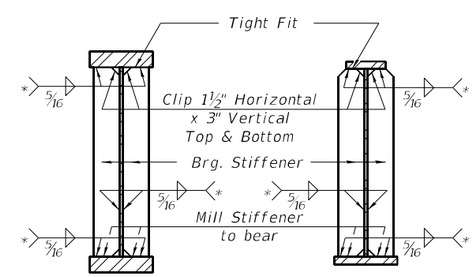

SECTION AT PIER

SECTION AT ABUTMENT

* Terminate ¼" (±⅛") from the end of plate intersects.

CEC Cummins Engineering Corporation ENGINEERS & SURVEYORS	JOB = 2564.3	DESIGNED - AAN	REVISED -	STATE OF ILLINOIS DEPARTMENT OF TRANSPORTATION	STRUCTURAL STEEL STRUCTURE NO. 074-0069 (EB) AND 074-0070 (WB)	F.A.I. 72	SECTION (74-68VB)B	COUNTY PIATT	TOTAL SHEETS 93	SHEET NO. 69
	FILE = 0740069.0070-70024-033.035-StSteel.dgn	CHECKED - MDC	REVISED -					CONTRACT NO. 70024		
	DATE = 4/14/2025	DRAWN - TSH	REVISED -		SHEET NO. 33 OF 49 SHEETS		ILLINOIS FED. AID PROJECT			
		CHECKED - MDC	REVISED -							

INTERIOR GIRDER MOMENT TABLE				
		0.4 Sp. 1/ 0.6 Sp. 3	Pier 1/ Pier 2	0.5 Sp. 2
I_s	(in^4)	10,926	15,257	10,926
$I_c(n)$	(in^4)	29,912	37,954	29,912
$I_c(3n)$	(in^4)	22,992	28,908	22,992
$I_c(cr)$	(in^4)	–	20,700	–
S_s	(in^3)	502	690	502
$S_c(n)$	(in^3)	731	941	731
$S_c(3n)$	(in^3)	674	871	674
$S_c(cr)$	(in^3)	–	788	–
S_x	(in^3)	690	763	692
DC1	(k/')	0.928	0.928	0.928
M_{DC1}	('k)	268	582	257
DC2	(k/')	0.175	0.175	0.175
M_{DC2}	('k)	51	108	50
DW	(k/')	0.333	0.333	0.333
M_{DW}	('k)	97	205	97
LLDF		0.628	.616	.603
M_{LL+IM}	('k)	804	932	790
f_f (Strength I)	(ksi)	10.0	10.0	10.0
$M_u + \frac{1}{3} f_f S_x$	('k)	2,143	3,013	2,104
$\phi_f M_n$	('k)	3,739	–	3,746
f_s DC1	(ksi)	6.4	10.1	6.1
f_s DC2	(ksi)	0.9	1.6	0.9
f_s DW	(ksi)	1.7	3.1	1.7
f_s (f_L+IM)	(ksi)	13.2	14.2	13.0
f_f (Service II)	(ksi)	10.0	10.0	10.0
$f_s + f_f/2$ (Service II)	(ksi)	31.2	38.3	30.6
Service II Resistance	(ksi)	47.5	47.5	47.5
$f_s + f_f/3$ (Strength I)	(ksi)	38.1	47.5	37.4
$\phi_f F_n$	(ksi)	–	50.0	–
V_f	(k)	32.5	54.1	36.6

GIRDER REACTION TABLE			
		Abut.	Pier
LLDF		0.758	0.758
OCF		1.23	–
$*R_{DC1}$	(k)	*66.3	79.2
R_{DC2}	(k)	4.3	14.9
R_{DW}	(k)	8.1	28.4
R_{LL}	(k)	74.2	101.8
R_{IM}	(k)	18.5	19.0
R_{Total} (Strength I)(Impact)	(k)	262.6	371.6
R_{Total} (Strength I)(No Impact)	(k)	230.3	338.4

*R_{DC1} includes service reaction due to weight of approach slab and parapet on approach slab.

I_s, S_s : Non-composite moment of inertia and section modulus of the steel section used for computing f_s(Total-Strength I, and Service II) due to non-composite dead loads ($in.^4$ and $in.^3$).

$I_c(n)$, $S_c(n)$: Composite moment of inertia and section modulus of the steel and deck based upon the modular ratio, "n", used for computing f_s(Total-Strength I, and Service II) in uncracked sections due to short-term composite live loads ($in.^4$ and $in.^3$).

$I_c(3n)$, $S_c(3n)$: Composite moment of inertia and section modulus of the steel and deck based upon 3 times the modular ratio, "3n", used for computing f_s(Total-Strength I, and Service II) in uncracked sections, due to long-term composite (superimposed) dead loads ($in.^4$ and $in.^3$).

$I_c(cr)$, $S_c(cr)$: Composite moment of inertia and section modulus of the steel and longitudinal deck reinforcement, used for computing f_s (Total-Strength I and Service II) in cracked sections, due to both short-term composite live loads and long-term composite (superimposed) dead loads ($in.^4$ and $in.^3$).

S_x : Section modulus about the major axis of a section to the controlling flange, tension or compression, taken as yield moment with respect to the controlling flange over the yield strength of the controlling flange ($in.^3$).

DC1: Un-factored non-composite dead load (kips/ft.).

M_{DC1} : Un-factored moment due to non-composite dead load (kip-ft.).

DC2: Un-factored long-term composite (superimposed excluding future wearing surface) dead load (kips/ft.).

M_{DC2} : Un-factored moment due to long-term composite (superimposed excluding future wearing surface) dead load (kip-ft.).

DW: Un-factored long-term composite (superimposed future wearing surface only) dead load (kips/ft.).

M_{DW} : Un-factored moment due to long-term composite (superimposed future wearing surface only) dead load (kip-ft.).

LLDF: Live Load Distribution Factor for moment and shear computed according to Article 4.6.2.2 and further IDOT provisions.

M_{LL+IM}: Un-factored live load moment plus dynamic load allowance (impact) (kip-ft.).

M_u : Strength I load combination of factored design moments (kip-ft.).
$1.25\ (M_{DC1} + M_{DC2}) + 1.5\ M_{DW} + 1.75\ M_{LL+IM}$

f_f : Factored calculated flange lateral bending stress as calculated using Article 6.10.1.6 and as further simplified by IDOT provisions (ksi).

$\phi_f M_n$: Factored nominal flexural resistance of the section determined as specified in Article 6.10.7.1 or A6 as applicable (kip-ft.).

f_s DC1: Un-factored stress at edge of flange for controlling steel flange due to vertical non-composite dead loads as calculated below (ksi).
M_{DC1} / S_s

f_s DC2: Un-factored stress at edge of flange for controlling steel flange due to vertical composite dead loads as calculated below (ksi).
$M_{DC2} / S_c(3n)$ or $M_{DC2} / S_c(cr)$ as applicable.

f_s DW: Un-factored stress at edge of flange for controlling steel flange due to vertical composite future wearing surface loads as calculated below (ksi).
$M_{DW} / S_c(3n)$ or $M_{DW} / S_c(cr)$ as applicable.

f_s (f_L + IM): Un-factored stress at edge of flange for controlling steel flange due to vertical composite live load plus impact loads as calculated below (ksi).
$M_{LL+IM} / S_c(n)$ or $M_{LL+IM} / S_c(cr)$ as applicable.

$f_s + f_f/2$ (Service II): Sum of stresses as computed below (ksi).
f_s DC1 + f_s DC2 + f_s DW + 1.3 f_s (f_L + IM) + $f_f/2$

Service II Resistance: Composite ($0.95R_hF_{yf}$) or noncomposite ($0.80R_hF_{yf}$) stress capacity according to Article 6.10.4.2 (ksi).

$f_s + f_f/3$ (Strength I): Sum of stresses as computed below on non-compact sections (ksi).
1.25 (f_s DC1 + f_s DC2) + 1.5 f_s DW + 1.75 f_s (f_L + IM) + $f_f/3$

$\phi_f F_n$: Factored nominal flexural resistance of the section as specified in Article 6.10.7.2 or 6.10.8 as applicable (ksi).

V_f : Maximum factored shear range in span computed according to Article 6.10.10.

OCF: Obtuse Correction Factor according to Article 4.6.2.2.3c or as further simplified by IDOT provisions.

R_{DC1} : Un-factored reaction due to non-composite dead load (kip).

R_{DC2} : Un-factored reaction due to long-term composite (superimposed excluding future wearing surface) dead load (kip).

R_{DW} : Un-factored reaction due to long-term composite (superimposed future wearing surface only) dead load (kip).

R_{LL} : Un-factored live load reaction (kip).

R_{IM} : Un-factored dynamic load allowance (impact) (kip).

R_{Total} (Strength I)(Impact): Strength I load combination of factored design reactions (kip).
$1.25\ (R_{DC1} + R_{DC2}) + 1.5R_{DW} + 1.75\ (R_{LL} + R_{IM})$

R_{Total} (Strength I)(No Impact): Strength I load combination of factored design reactions, not including dynamic load allowance (Impact) (kip).
$1.25\ (R_{DC1} + R_{DC2}) + 1.5R_{DW} + 1.75\ (R_{LL})$

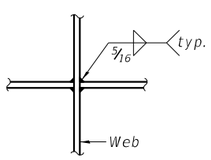

WEB WELD DETAIL

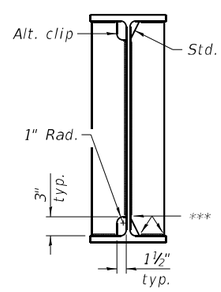

WELD LIMITS AND CLIP DETAILS

*** Stop welds ¼" (±⅛") from edges as shown. Typical.

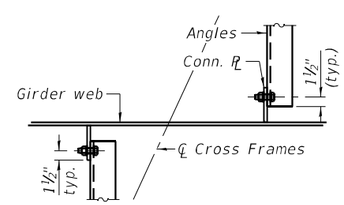

DETAIL A

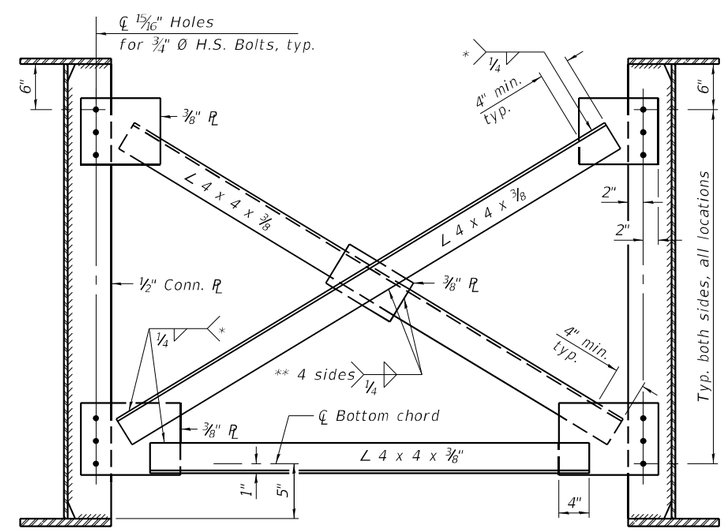

INTERIOR CROSS-FRAME
(110 Required)

Notes:
Two hardened washers required for each set of oversized holes.
Omit connection plates on exterior side of exterior girders.

* Fillet weld angles along 3 sides on one face of gusset plate; however, if cross-frames are galvanized, weld all-around.

** If cross-frames are galvanized, weld all-around.

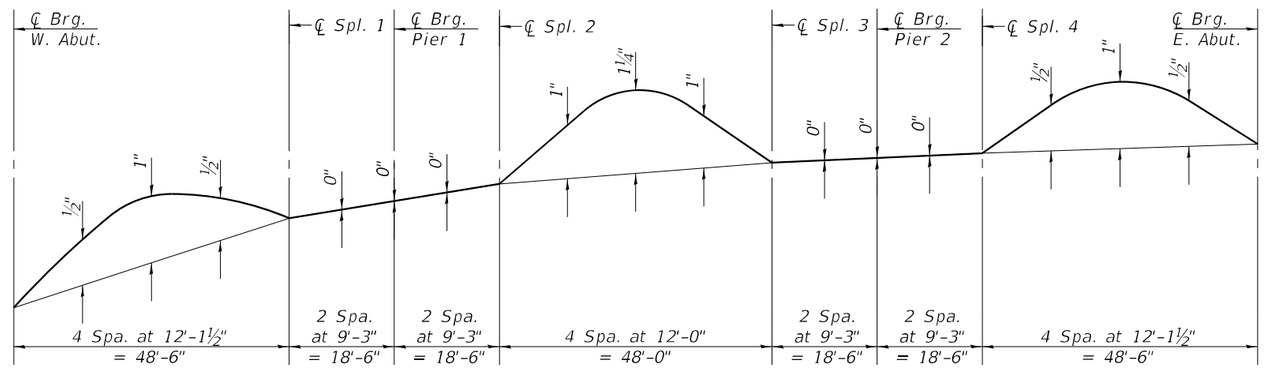

CAMBER DIAGRAM S.N. 074-0070 (WB)

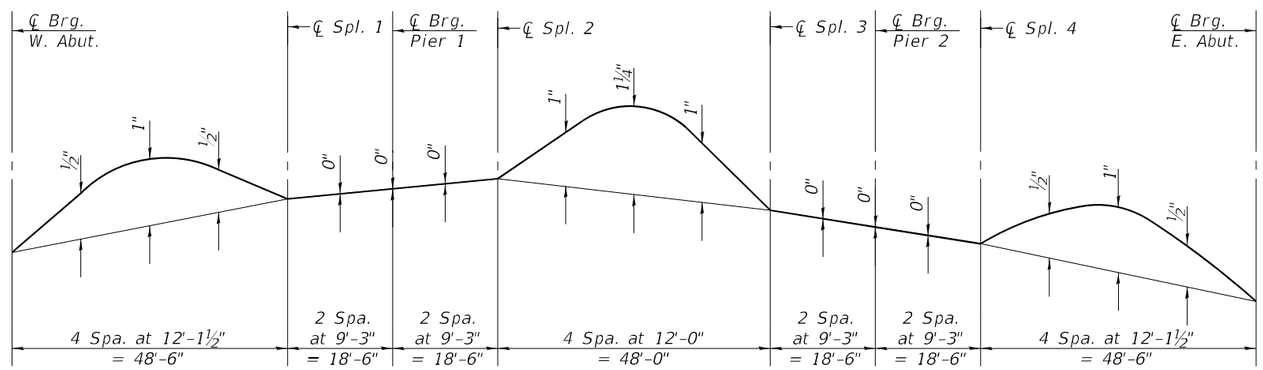

CAMBER DIAGRAM S.N. 074-0069 (EB)

TOP OF WEB ELEVATIONS S.N. 074-0070 (WB)

(For Fabrication Only)

Location	CL Brg. W. Abut.	CL Splice 1	CL Brg. Pier 1	CL Splice 2	CL Splice 3	CL Brg. Pier 2	CL Splice 4	CL Brg. E. Abut.
Girder 1	676.50	676.52	676.55	676.54	676.49	676.48	676.42	676.31
Girder 2	676.62	676.66	676.69	676.68	676.65	676.64	676.58	676.49
Girder 3	676.72	676.76	676.80	676.79	676.77	676.77	676.71	676.63
Girder 4	676.75	676.81	676.85	676.85	676.84	676.84	676.79	676.72
Girder 5	676.62	676.68	676.74	676.73	676.74	676.74	676.69	676.63
Girder 6	676.46	676.54	676.60	676.60	676.61	676.62	676.58	676.53

TOP OF WEB ELEVATIONS S.N. 074-0069 (EB)

(For Fabrication Only)

Location	CL Brg. W. Abut.	CL Splice 1	CL Brg. Pier 1	CL Splice 2	CL Splice 3	CL Brg. Pier 2	CL Splice 4	CL Brg. E. Abut.
Girder 7	676.24	676.36	676.44	676.47	676.54	676.58	676.56	676.60
Girder 8	676.33	676.46	676.54	676.57	676.66	676.70	676.69	676.73
Girder 9	676.40	676.54	676.63	676.66	676.76	676.80	676.79	676.85
Girder 10	676.30	676.45	676.54	676.58	676.69	676.73	676.73	676.79
Girder 11	676.15	676.31	676.40	676.44	676.56	676.61	676.61	676.68
Girder 12	675.96	676.13	676.23	676.27	676.40	676.45	676.45	676.54

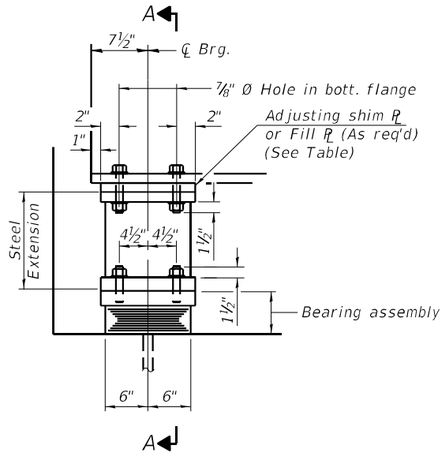

ELEVATION AT ABUT.

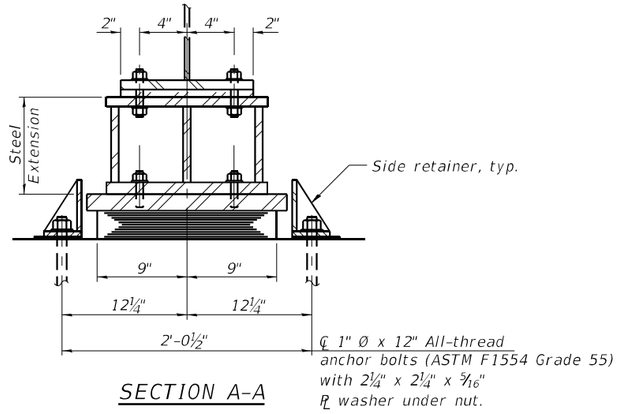

SECTION A-A

TYPE I ELASTOMERIC EXP. BRG.

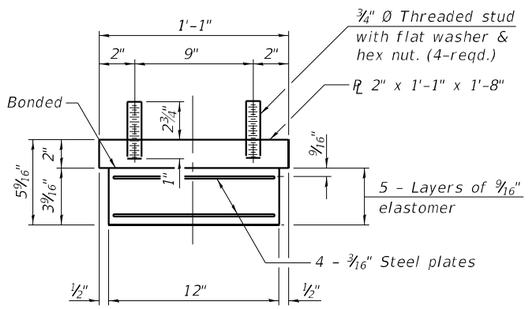

BEARING ASSEMBLY

Note:
Shim plates shall not be placed under bearing assembly.

Notes:

Anchor bolts for side retainers may be cast in place or installed in holes drilled before or after members are in place.

Drilled and set anchor bolts shall be installed according to Article 521.06 of the Standard Specifications.

Side retainers and other steel members required for the elastomeric bearing assembly shall be included in the cost of Elastomeric Bearing Assembly, Type I.

New steel extensions, shim plates and connection bolts are included with Furnishing and Erecting Structural Steel.

Prior to ordering any material, the Contractor shall verify in the field all bearing height and shim thickness dimensions.

Two ⅛ in. adjusting shims shall be provided for each bearing in addition to all other plates or shims and placed as shown on the bearing details.

All (embedded and separate) bearing plates, side retainers, anchor bolts, nuts, washers and pintles shall be galvanized according to AASHTO M111 or M232 as applicable.

The structural steel plates of the Bearing Assembly and Steel Extensions shall conform to the requirements of AASHTO M270 Grade 50.

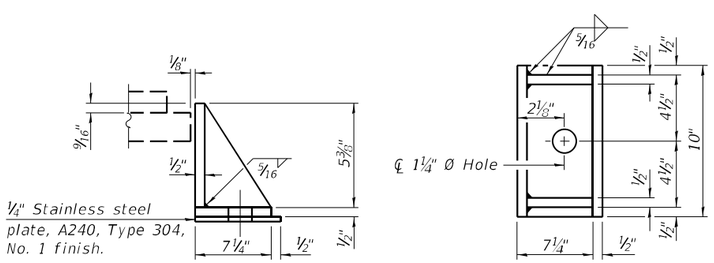

SIDE RETAINER

Equivalent rolled angle with stiffeners will be allowed in lieu of welded plates.

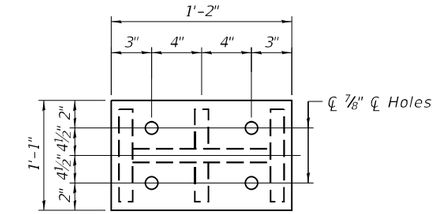

PLAN - TOP & BOTTOM

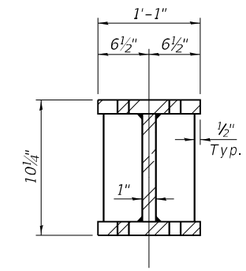

SECTION

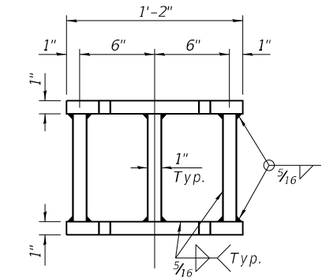

ELEVATION

FABRICATED STEEL EXTENSION

(24 Required)

FILL PLATE THICKNESS TABLE S.N. 074-0070 (WB)

	Girder 1	Girder 2	Girder 3	Girder 4	Girder 5	Girder 6
W. Abut.	2¼"	2⅛"	1⅞"	2¼"	1⅞"	1¾"
E. Abut.	0"	⅛"	½"	⅜"	¾"	1¼"

FILL PLATE THICKNESS TABLE S.N. 074-0069 (EB)

	Girder 7	Girder 8	Girder 9	Girder 10	Girder 11	Girder 12
W. Abut.	2⅛"	2¼"	2⅛"	2¼"	2⅜"	2⅝"
E. Abut.	1⅞"	1⅛"	1⅛"	¾"	1"	⅞"

(Fill PL "t" x 1'-0" x 1'-1")

BILL OF MATERIAL

Item	Unit	Total
Elastomeric Bearing Assembly Type I	Each	24
Anchor Bolts, 1"	Each	48

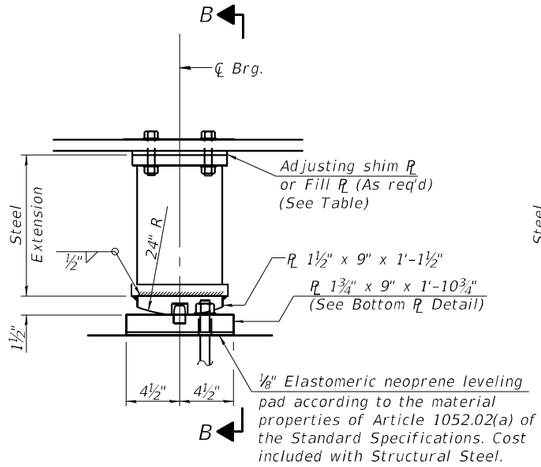

ELEVATION AT PIER 1

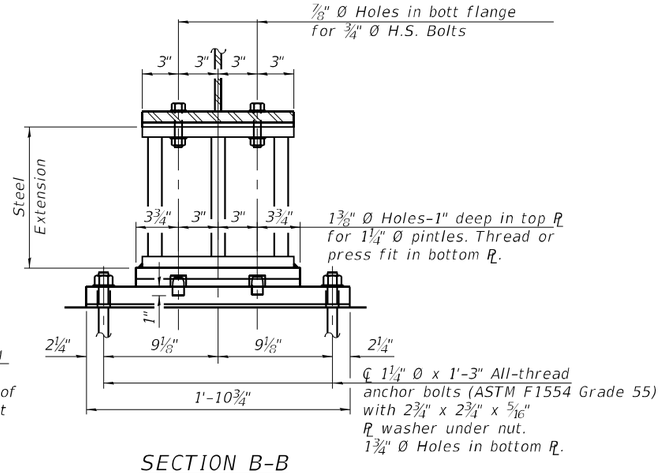

SECTION B-B

FIXED BEARING

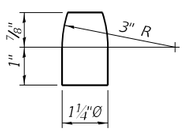

PINTLE

Notes:

Anchor bolts for side retainers may be cast in place or installed in holes drilled before or after members are in place.

Drilled and set anchor bolts shall be installed according to Article 521.06 of the Standard Specifications.

Side retainers and other steel members required for the elastomeric bearing assembly shall be included in the cost of Elastomeric Bearing Assembly, Type I.

New steel extensions, shim plates and connection bolts are included with Furnishing and Erecting Structural Steel.

Prior to ordering any material, the Contractor shall verify in the field all bearing height and shim thickness dimensions.

Two ⅛ in. adjusting shims shall be provided for each bearing in addition to all other plates or shims and placed as shown on the bearing details.

All (embedded and separate) bearing plates, side retainers, anchor bolts, nuts, washers and pintles shall be galvanized according to AASHTO M111 or M232 as applicable.

The structural steel plates and pintles of the fixed bearing steel extensions shall conform to the requirements of AASHTO M270 Grade 50

See Sheet 47 of 49 for Anchor Bolt Layout.

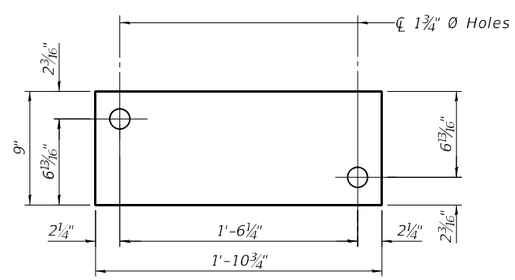

BOTTOM PL DETAIL

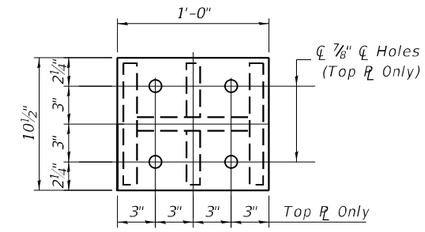

PLAN - TOP

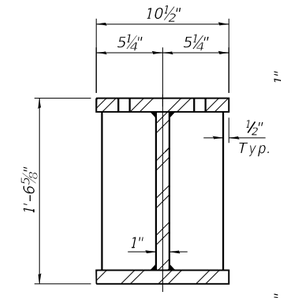

SECTION

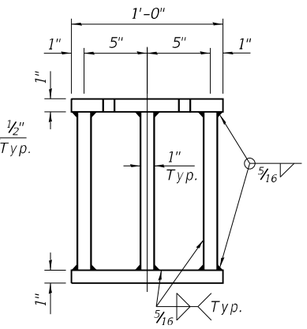

ELEVATION

FABRICATED STEEL EXTENSION AT PIER 1

(12 Required)

FILL "t" DIMENSION TABLE S.N. 074-0070 (WB)

	Girder 1	Girder 2	Girder 3	Girder 4	Girder 5	Girder 6
Pier 1	⅜"	¼"	⅛"	¾"	0"	⅞"

FILL "t" DIMENSION TABLE S.N. 074-0069 (EB)

	Girder 7	Girder 8	Girder 9	Girder 10	Girder 11	Girder 12
Pier 1	¾"	½"	½"	⅝"	⅜"	⅝"

(Fill PL "t" x 10½" x 1'-0")

BILL OF MATERIAL

Item	Unit	Total
Anchor Bolts, 1¼"	Each	24

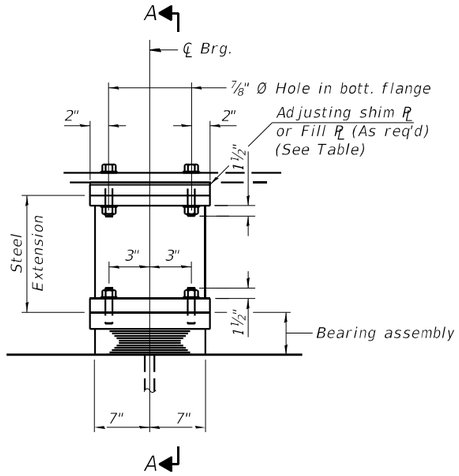

ELEVATION AT PIER 2

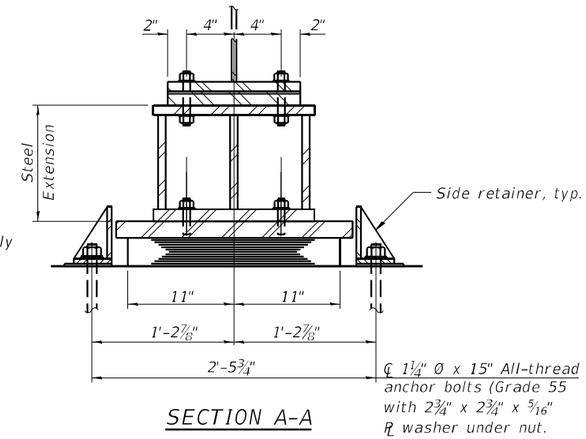

SECTION A-A

TYPE I ELASTOMERIC EXP. BRG.

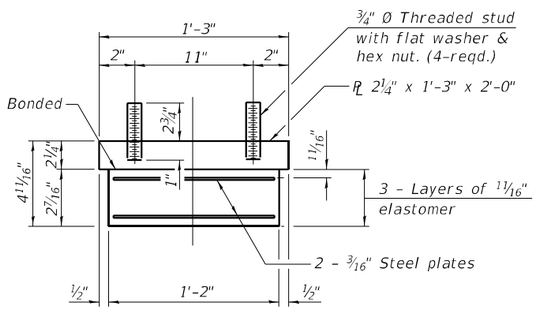

BEARING ASSEMBLY

Note:
Shim plates shall not be placed under bearing assembly.

Notes:

Anchor bolts for side retainers may be cast in place or installed in holes drilled before or after members are in place.

Drilled and set anchor bolts shall be installed according to Article 521.06 of the Standard Specifications.

Side retainers and other steel members required for the elastomeric bearing assembly shall be included in the cost of Elastomeric Bearing Assembly, Type I.

New steel extensions, shim plates and connection bolts are included with Furnishing and Erecting Structural Steel.

Prior to ordering any material, the Contractor shall verify in the field all bearing height and shim thickness dimensions.

Two 1/8 in. adjusting shims shall be provided for each bearing in addition to all other plates or shims and placed as shown on the bearing details.

All (embedded and separate) bearing plates, side retainers, anchor bolts, nuts, washers and pintles shall be galvanized according to AASHTO M111 or M232 as applicable.

The structural steel plates of the Bearing Assembly and Steel Extensions shall conform to the requirements of AASHTO M270 Grade 50

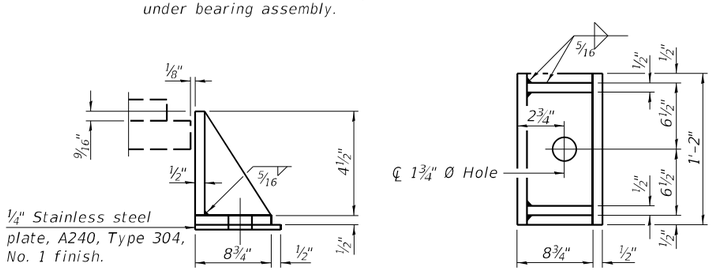

SIDE RETAINER

Equivalent rolled angle with stiffeners will be allowed in lieu of welded plates.

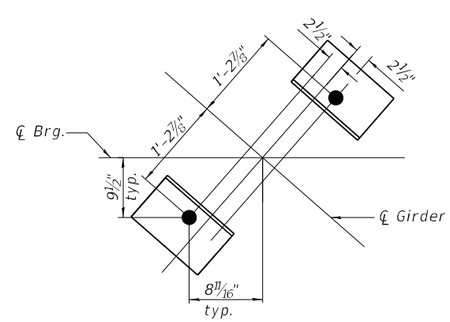

RETAINER LAYOUT

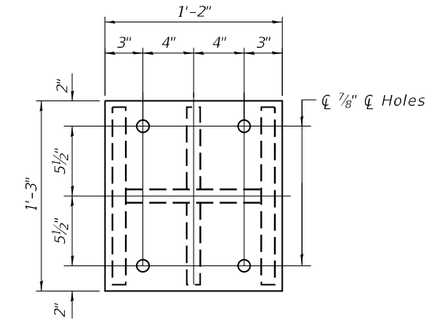

PLAN - TOP & BOTTOM

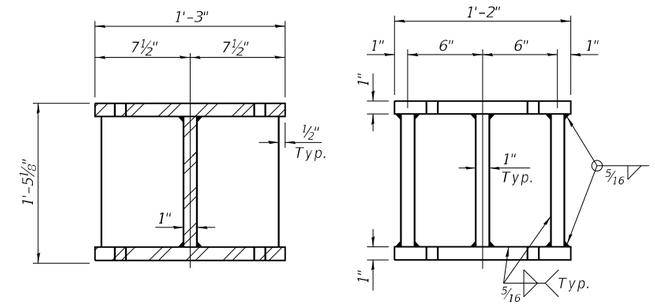

SECTION ELEVATION

FABRICATED STEEL EXTENSION AT PIER 2

(12 Required)

FILL "t" DIMENSION TABLE S.N. 074-0070 (WB)

	Girder 1	Girder 2	Girder 3	Girder 4	Girder 5	Girder 6
Pier 2	1/8"	1/8"	1/4"	0"	3/8"	3/8"

FILL "t" DIMENSION TABLE S.N. 074-0069 (EB)

	Girder 7	Girder 8	Girder 9	Girder 10	Girder 11	Girder 12
Pier 2	1 1/8"	1/2"	1/2"	5/8"	5/8"	5/8"

(Fill PL "t" x 1'-0" x 1'-3")

BILL OF MATERIAL

Item	Unit	Total
Elastomeric Bearing Assembly Type I	Each	12
Anchor Bolts, 1 1/4"	Each	24

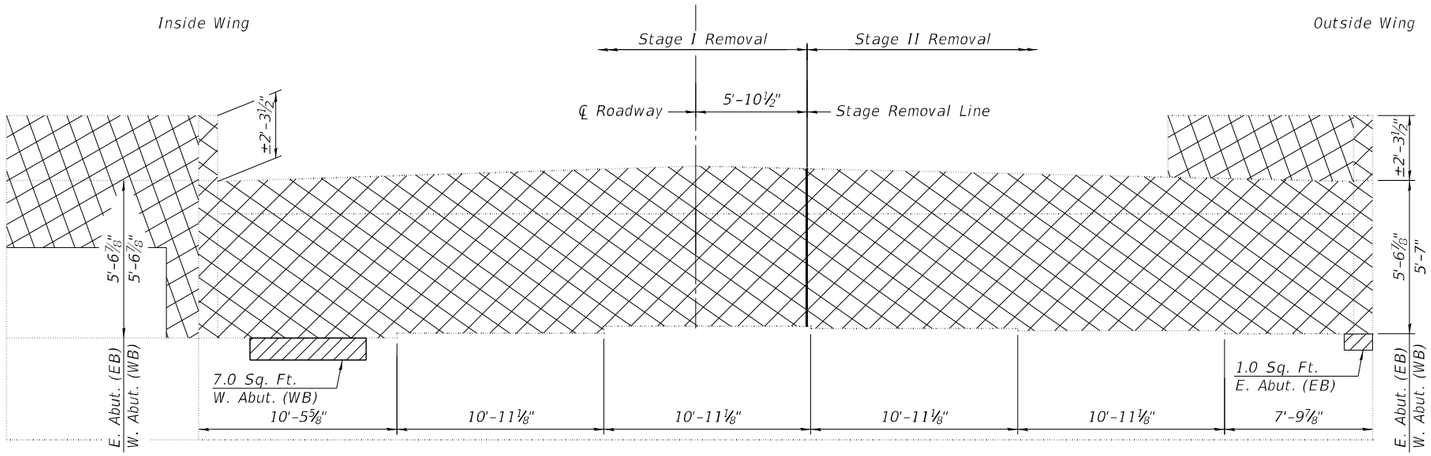

ABUTMENT ELEVATION

(East Abut. - EB)
(West Abut. - WB)

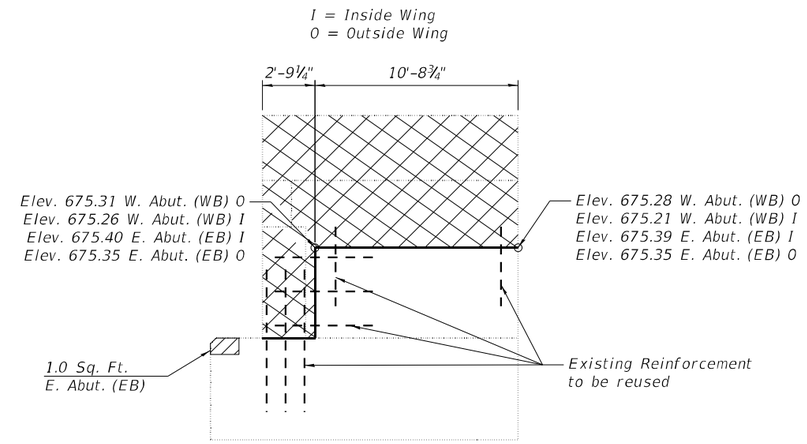

WINGWALL ELEVATION

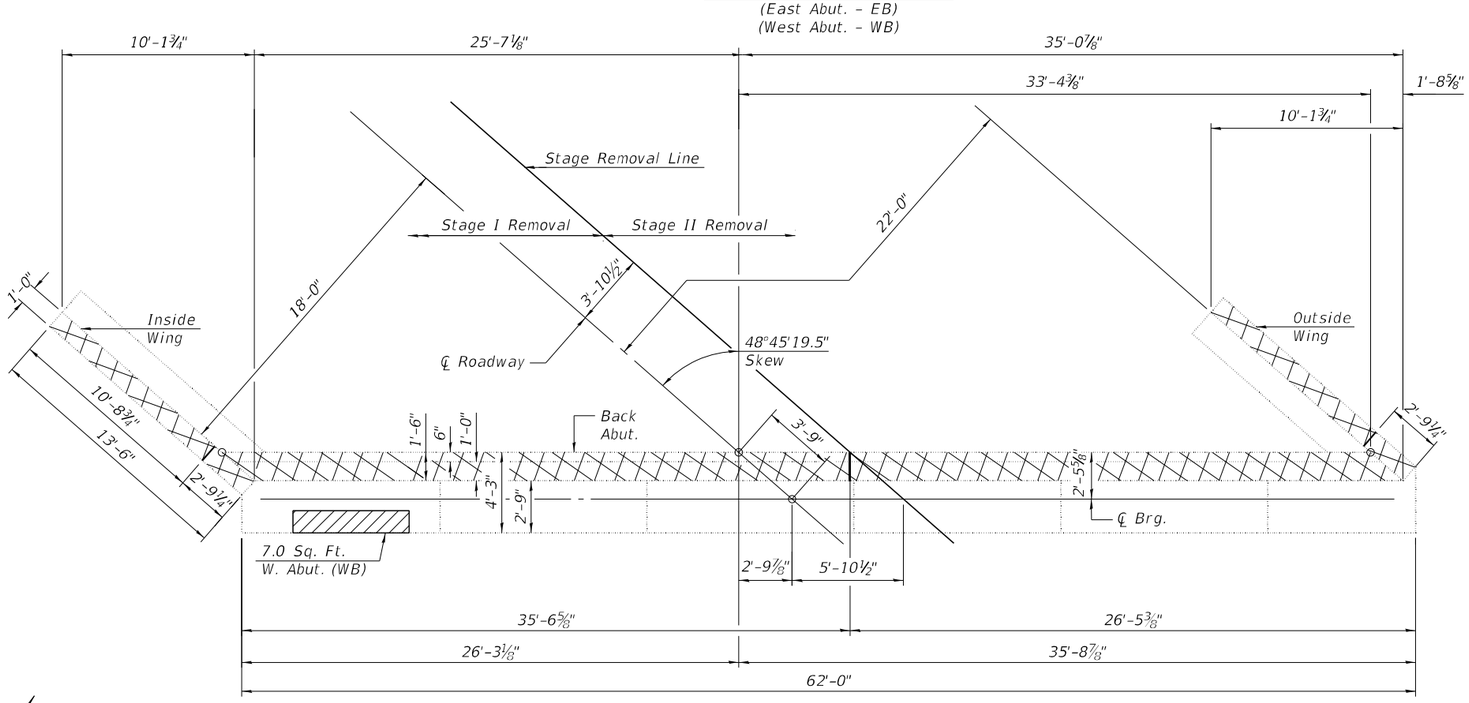

TOP VIEW

(East Abut. - EB)
(West Abut. - WB)

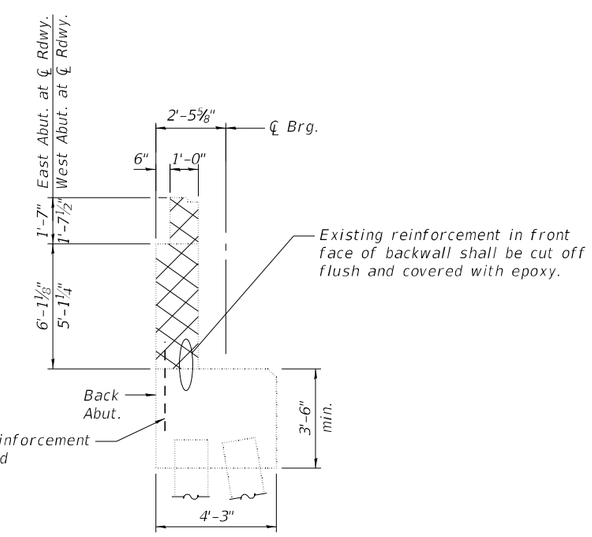

SECTION THRU ABUTMENT

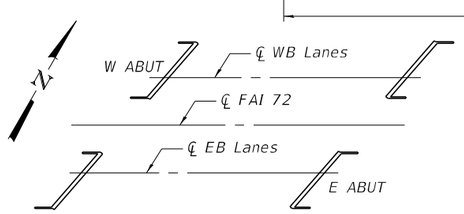

ABUTMENT KEY

LEGEND

- Indicates Structural Repair of Concrete (Depth Equal to or Less Than 5 Inches)
- Indicates Concrete Removal

TWO ABUTMENTS BILL OF MATERIAL

ITEM	UNIT	TOTAL
Structural Repair of Concrete (Depth Equal to or Less Than 5 Inches)	Sq. Ft.	16.0
Concrete Removal	Cu. Yd.	43.9

Notes:
Existing reinforcement to be resued shall be cleaned, straightened, and incorporated into the new construction. Cost included with Concrete Removal.
Cross-hatched area indicates Concrete Removal.
Hatched area indicates limits of Structural Repair of Concrete (Depth Equal to or Less Than 5 Inches).

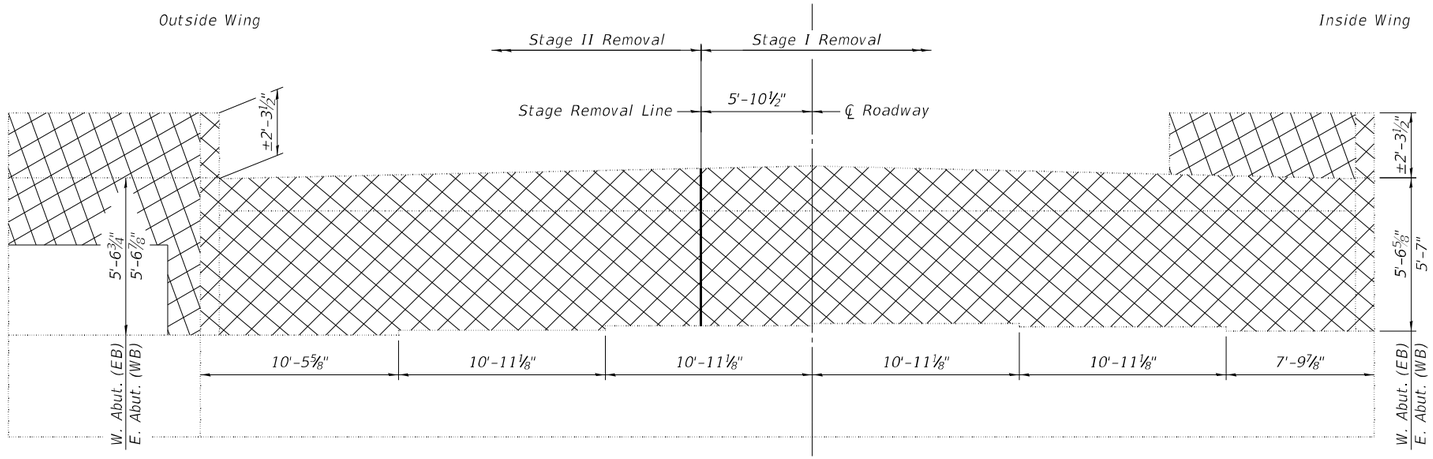

ABUTMENT ELEVATION

(West Abut. - EB)
(East Abut. - WB)

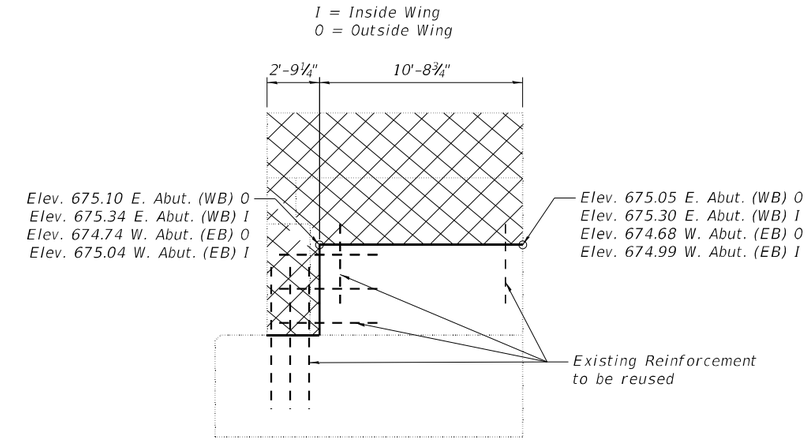

WINGWALL ELEVATION

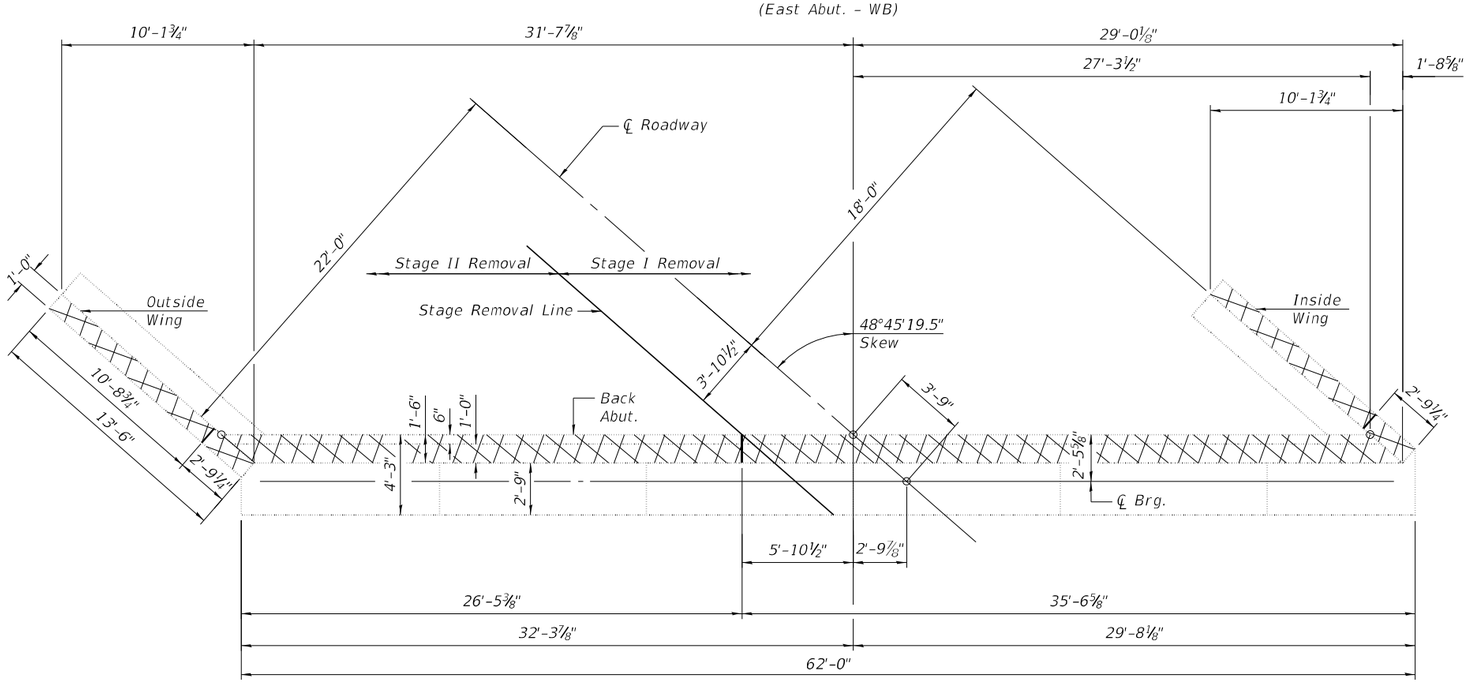

TOP VIEW

(West Abut. - EB)
(East Abut. - WB)

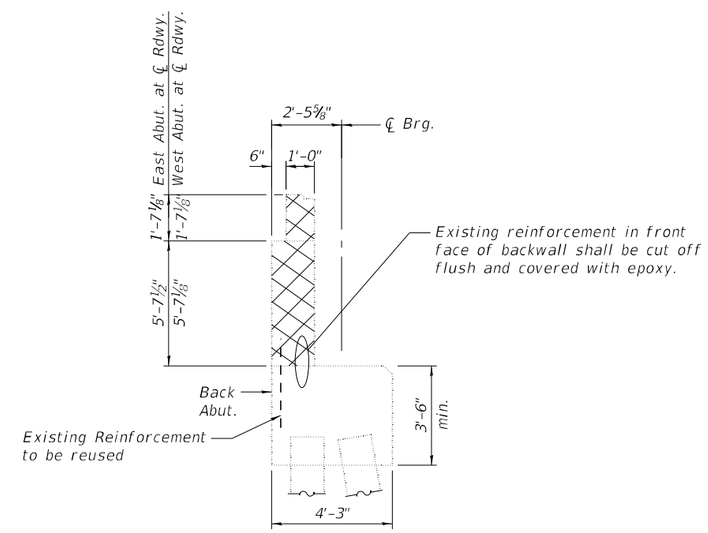

SECTION THRU ABUTMENT

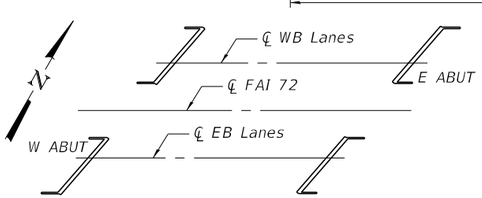

ABUTMENT KEY

LEGEND

- Indicates Concrete Removal

TWO ABUTMENTS BILL OF MATERIAL

Item	Unit	Qty.
Concrete Removal	Cu. Yd.	43.7

Notes:
Existing reinforcement to be reused shall be cleaned, straightened, and incorporated into the new construction. Cost included with Concrete Removal.
Cross-hatched area indicates Concrete Removal.

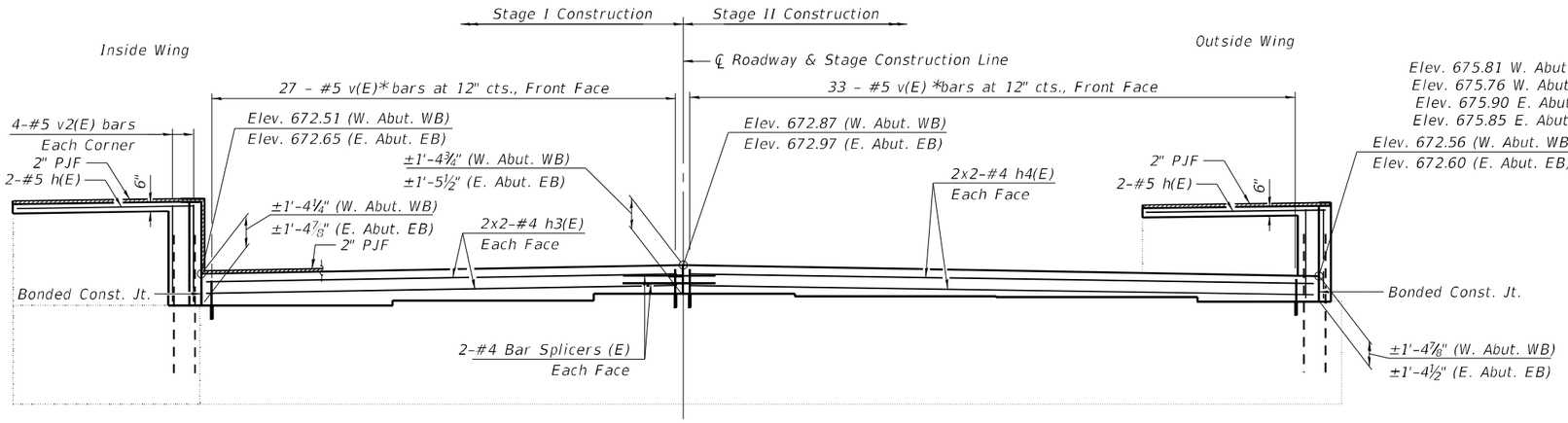

ABUTMENT ELEVATION

(East Abut. - EB)
(West Abut. - WB)

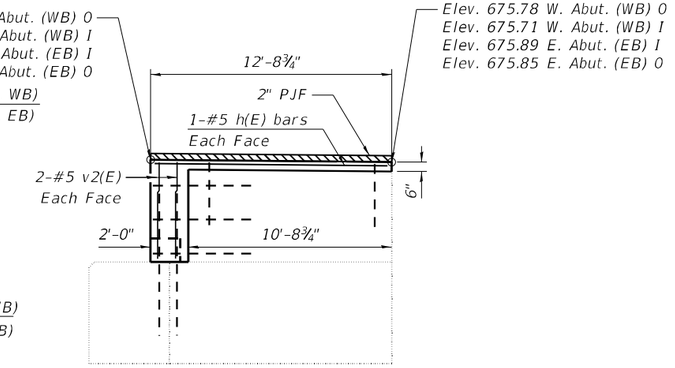

WINGWALL ELEVATION

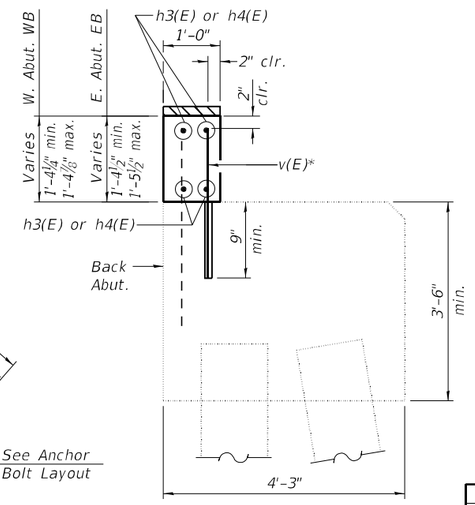

SECTION THRU ABUTMENT

MINIMUM BAR LAP

#4 Bar = 2'-8"

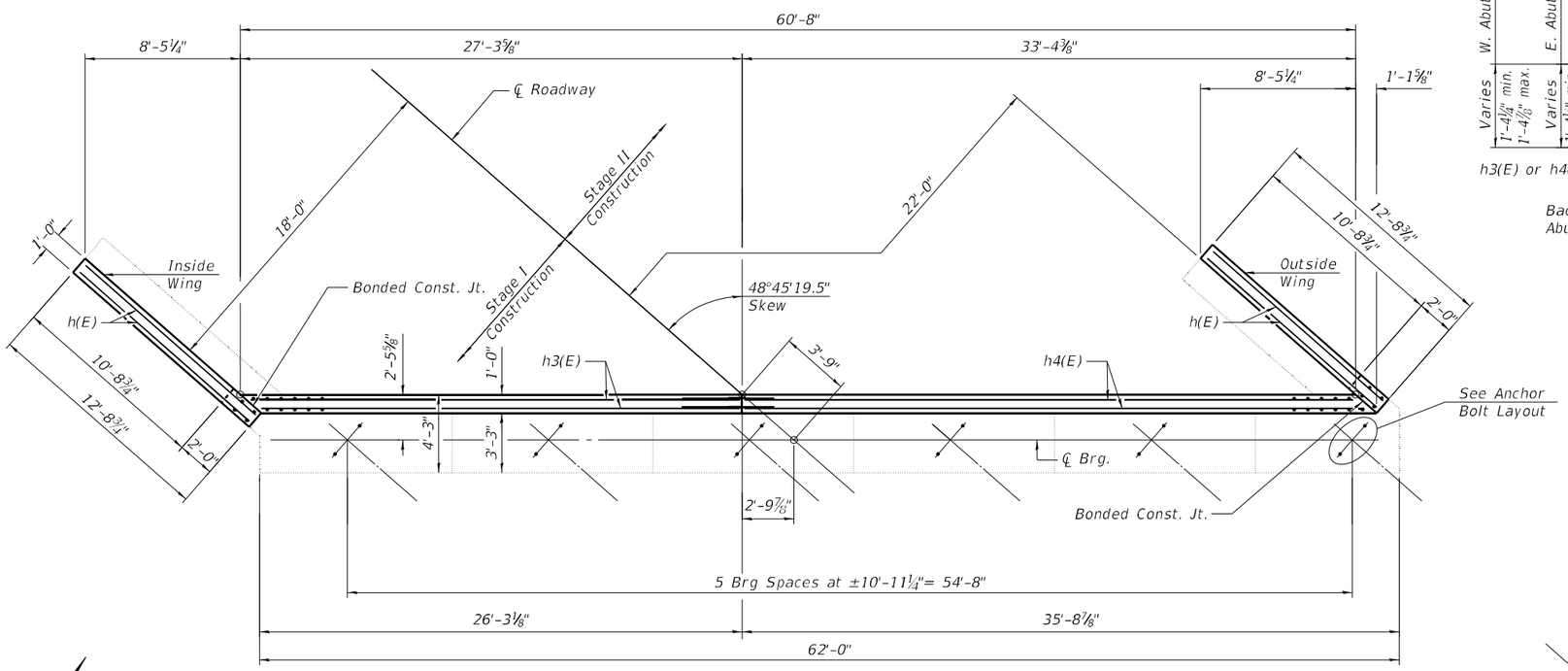

TOP VIEW

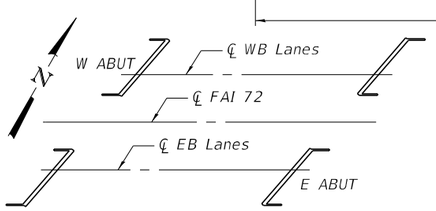

ABUTMENT KEY

EXISTING BEAM SEAT ELEVATIONS

Location	Girder 7	Girder 8	Girder 9	Girder 10	Girder 11	Girder 12
E. Abut. (EB)	671.36	671.48	671.62	671.53	671.42	671.26

Location	Girder 6	Girder 5	Girder 4	Girder 3	Girder 2	Girder 1
W. Abut. (WB)	671.15	671.29	671.39	671.39	671.28	671.14

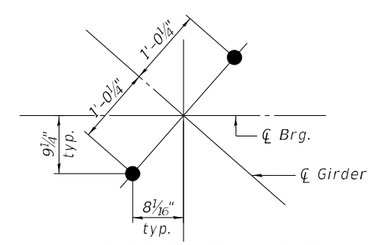

ANCHOR BOLT LAYOUT

TWO ABUTMENTS BILL OF MATERIAL

Bar	No.	Size	Length	Shape
h(E)	8	#5	12'-4"	
h3(E)	16	#4	14'-10"	
h4(E)	16	#4	18'-5"	
*v(E)	120	#5	2'-1"	
*v2(E)	16	#5	4'-3"	
Structure Excavation		Cu. Yd.	310	
Concrete Structures		Cu. Yd.	8.5	
Reinforcement Bars, Epoxy Coated		Pound	790	
Concrete Sealer		Sq. Ft.	650	

Bars indicated thus 2x3-#4 etc. indicates 2 lines of bars with 3 lengths per line.

* Denotes bar to be epoxy grouted in accordance with Section 584 of the Standard Specifications. Minimum embedment = 9". Cost included with Concrete Structures.

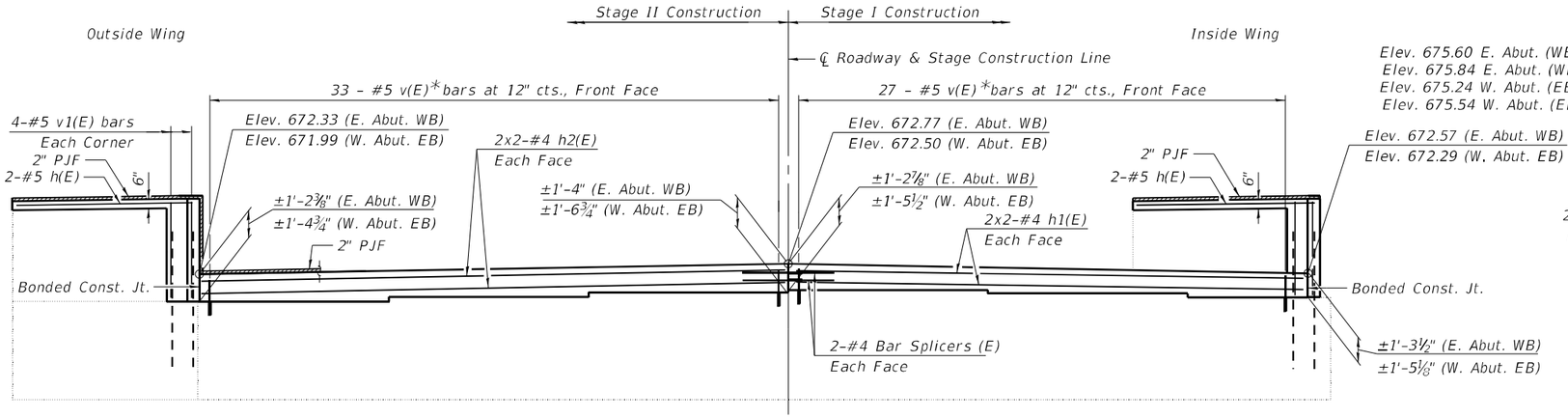

ABUTMENT ELEVATION

(West Abut. - EB)
(East Abut. - WB)

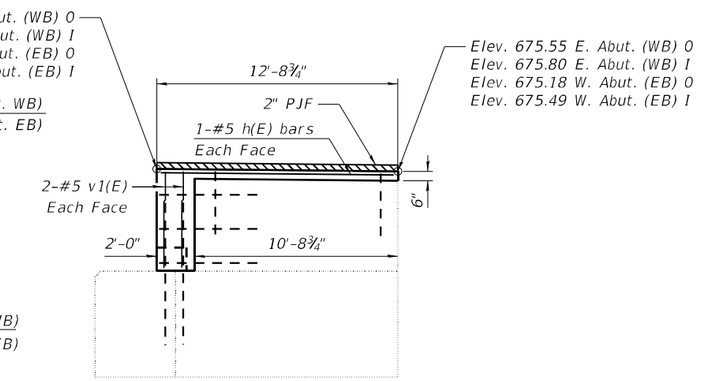

WINGWALL ELEVATION

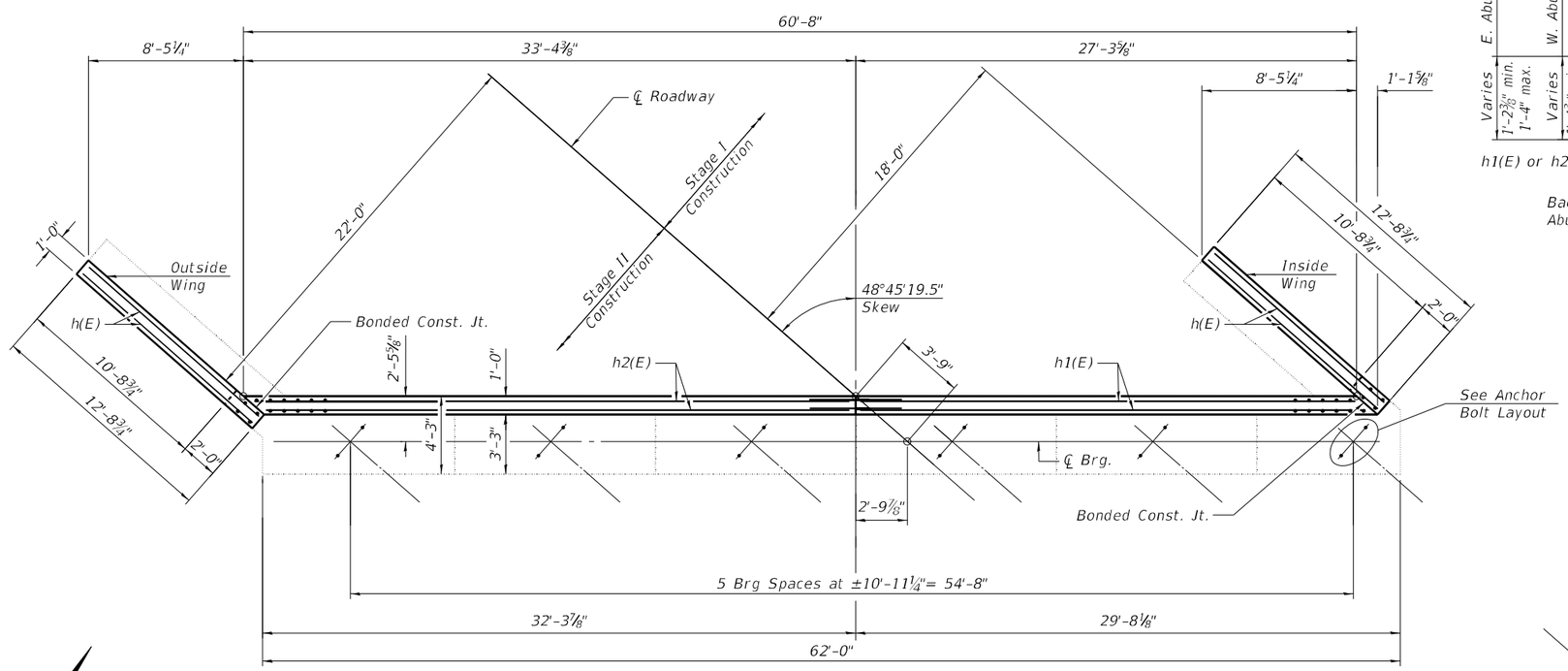

TOP VIEW

EXISTING BEAM SEAT ELEVATIONS

Location	Girder 12	Girder 11	Girder 10	Girder 9	Girder 8	Girder 7
W. Abut. (EB)	670.61	670.79	670.95	671.04	670.96	670.85

Location	Girder 1	Girder 2	Girder 3	Girder 4	Girder 5	Girder 6
E. Abut. (WB)	671.14	671.31	671.42	671.52	671.40	671.26

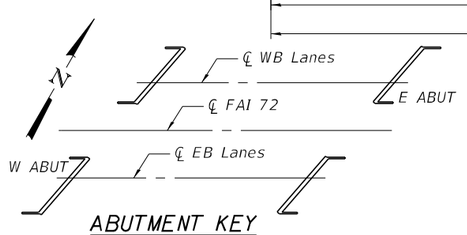

ABUTMENT KEY

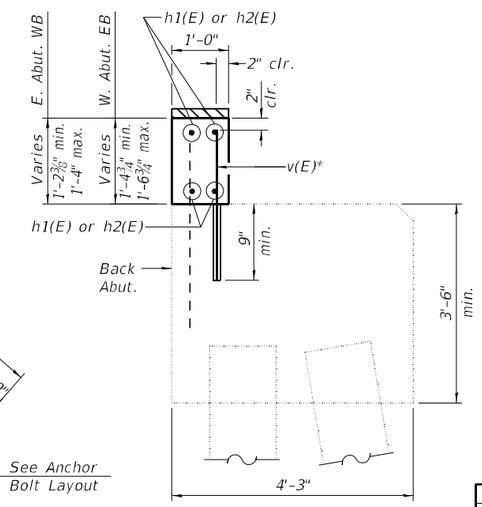

SECTION THRU ABUTMENT

MINIMUM BAR LAP

#4 Bar = 2'-8"

TWO ABUTMENTS BILL OF MATERIAL

Bar	No.	Size	Length	Shape
h(E)	8	#5	12'-4"	
h1(E)	16	#4	15'-5"	
h2(E)	16	#4	18'-0"	
*v(E)	120	#5	2'-1"	
*v1(E)	16	#5	4'-1"	
Structure Excavation			Cu. Yd.	313
Concrete Structures			Cu. Yd.	8.3
Reinforcement Bars, Epoxy Coated			Pound	790
Concrete Sealer			Sq. Ft.	642

Bars indicated thus 2x3-#4 etc. indicates 2 lines of bars with 3 lengths per line.

* Denotes bar to be epoxy grouted in accordance with Section 584 of the Standard Specifications. Minimum embedment = 9". Cost included with Concrete Structures.

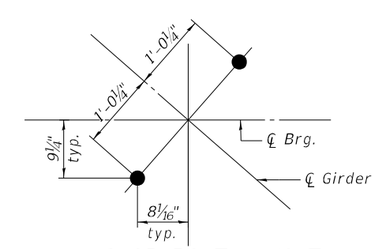

ANCHOR BOLT LAYOUT

CEC Cummins Engineering Corporation — ENGINEERS & SURVEYORS	JOB = 2564.3	DESIGNED - AAN	REVISED -
	FILE = 0740069.0070-70024-041.042-Abut.dgn	CHECKED - MDC	REVISED -
	DATE = 4/14/2025	DRAWN - TSH	REVISED -
		CHECKED - MDC	REVISED -

STATE OF ILLINOIS
DEPARTMENT OF TRANSPORTATION

ABUTMENTS
WEST ABUTMENT (EB), EAST ABUTMENT (WB)

SHEET NO. 42 OF 49 SHEETS

F.A.I.	SECTION	COUNTY	TOTAL SHEETS	SHEET NO.
72	(74-68VB)B	PIATT	93	78
		CONTRACT NO. 70024		
	ILLINOIS	FED. AID PROJECT		

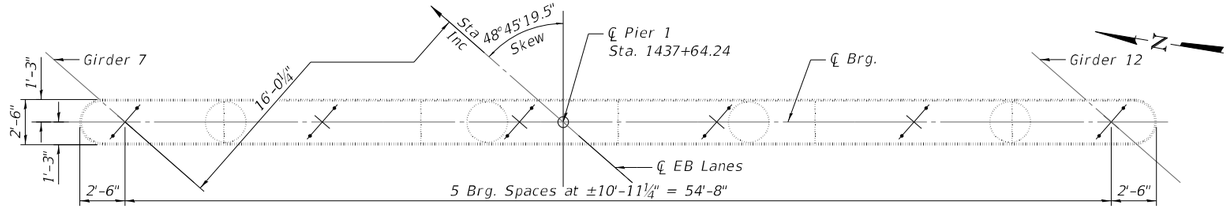

TOP PLAN

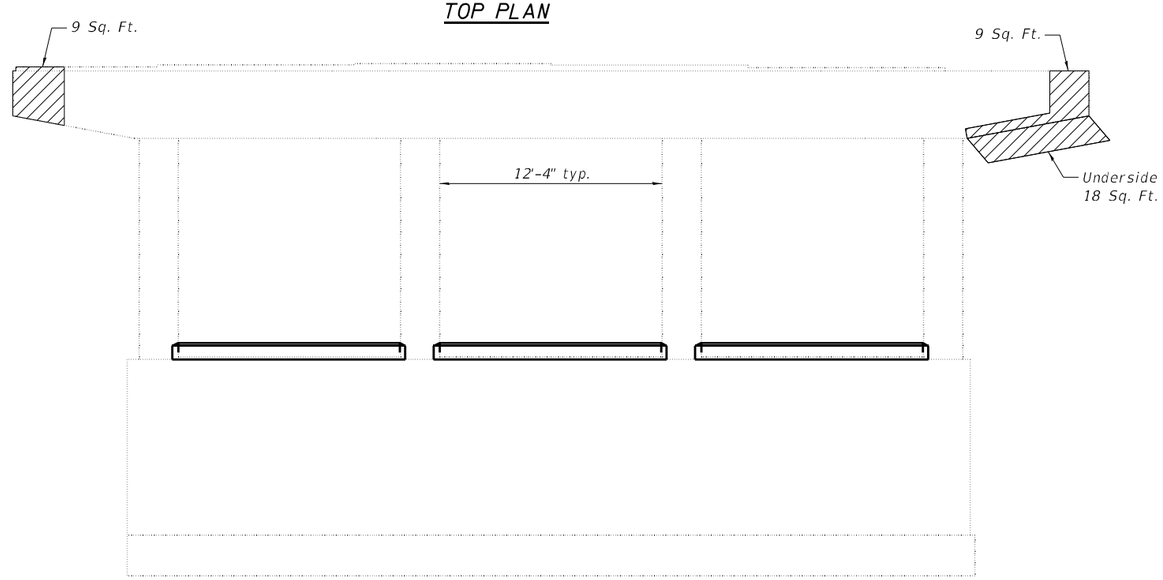

PIER 1
(Looking East)

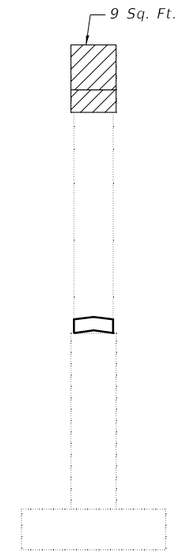

END VIEW

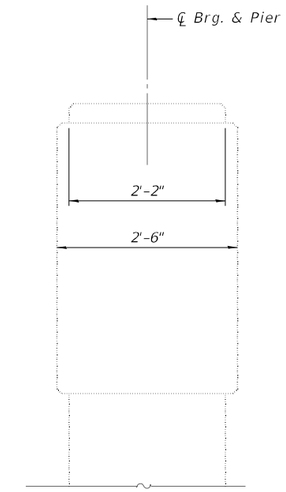

SECTION THRU PIER CAP
PIER 1 (EB)

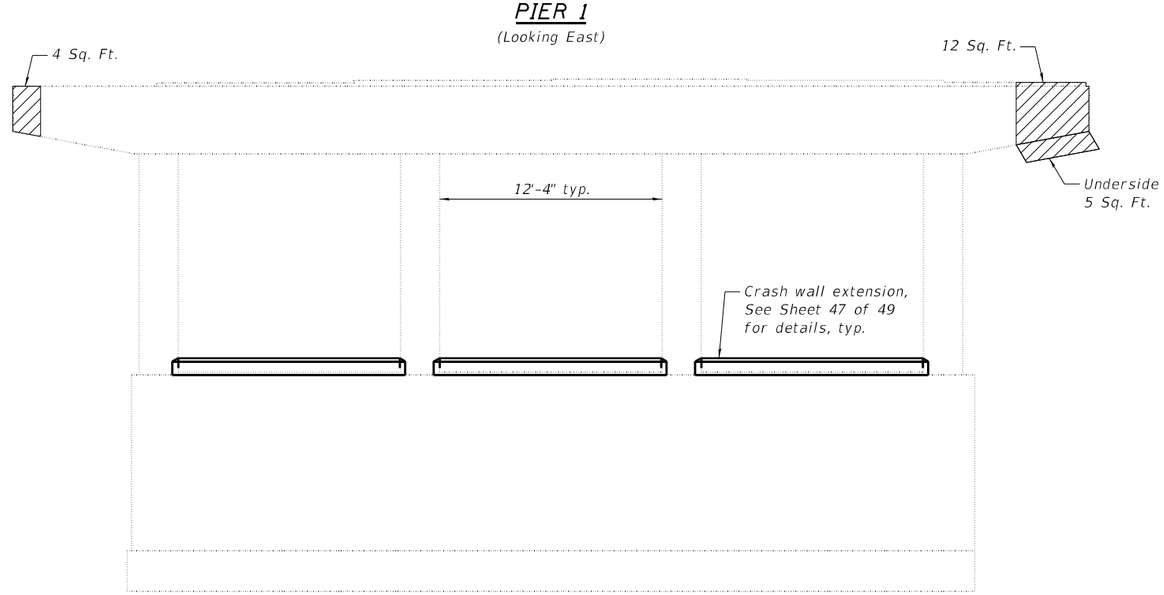

PIER 1
(Looking West)

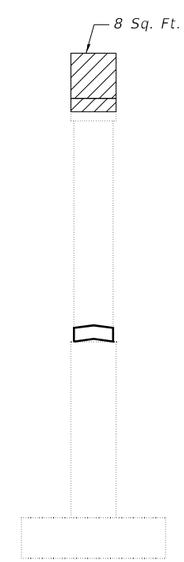

END VIEW

EXISTING BEAM SEAT ELEVATIONS

Location	Girder 7	Girder 8	Girder 9	Girder 10	Girder 11	Girder 12
Pier 1 (EB)	670.95	671.08	671.16	671.06	670.94	671.75

LEGEND

- Indicates Structural Repair of Concrete (Depth Equal to or Less Than 5 Inches)
- Indicates Structural Repair of Concrete (Depth Greater Than 5 Inches)

See sheet 47 of 49 for Anchor Bolt Layout and Bill of Material..

CEC Cummins Engineering Corporation ENGINEERS & SURVEYORS	JOB = 2564.3	DESIGNED - AAN	REVISED -	STATE OF ILLINOIS DEPARTMENT OF TRANSPORTATION	PIER REPAIRS STRUCTURE NO. 074-0069 (EB)	RTE.	SECTION	COUNTY	TOTAL SHEETS	SHEET NO.
	FILE = 07400069.0070-70024-043.047-Pier-Repair	CHECKED - MDC	REVISED -			1-72	(74-68VB)B	PIATT	93	79
	DATE = 4/8/2025	DRAWN - TSH	REVISED -					CONTRACT NO.		
		CHECKED - MDC	REVISED -		SHEET NO. 43 OF 49 SHEETS		ILLINOIS FED. AID PROJECT			

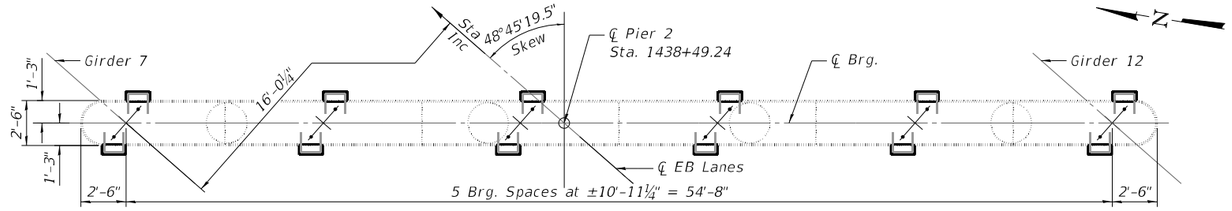

TOP PLAN

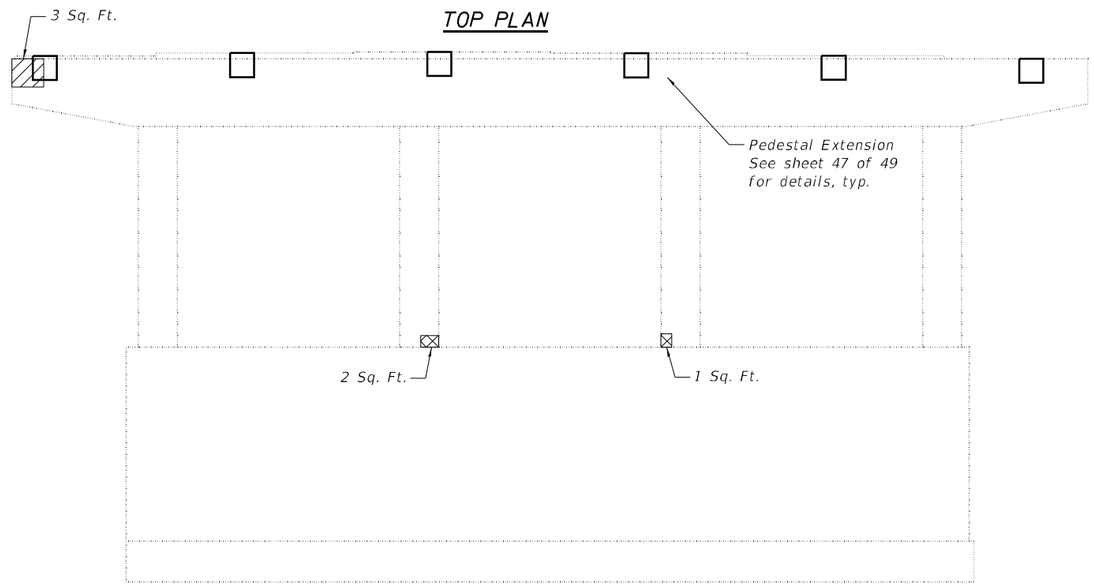

PIER 2

(Looking East)

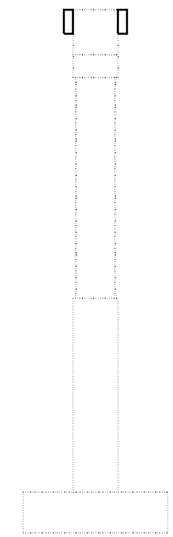

END VIEW

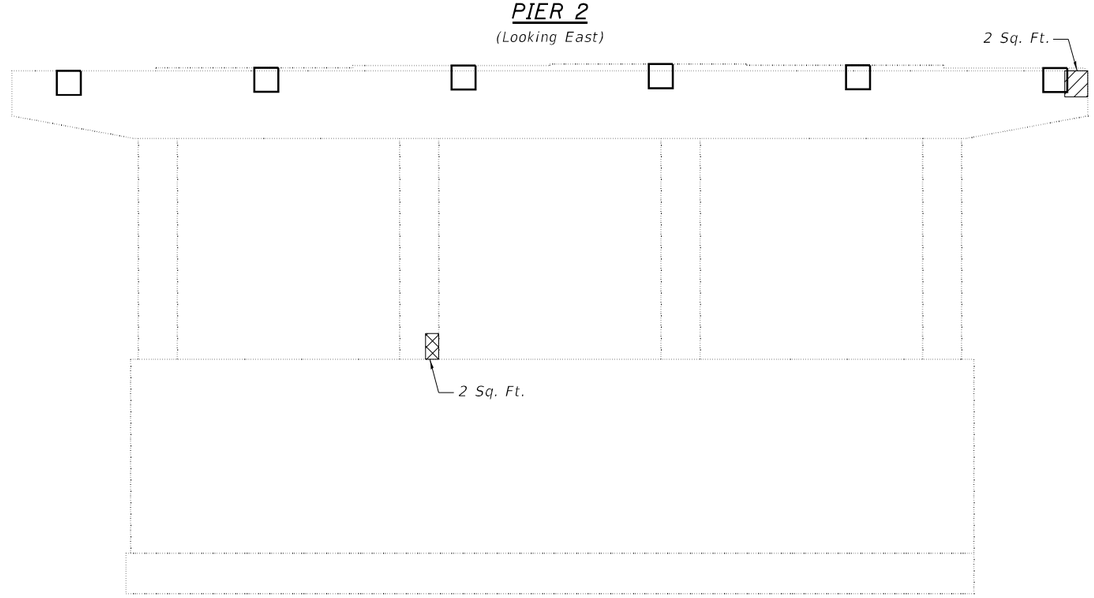

PIER 2

(Looking West)

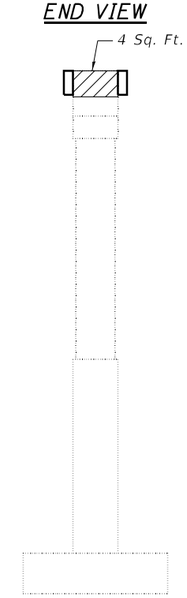

END VIEW

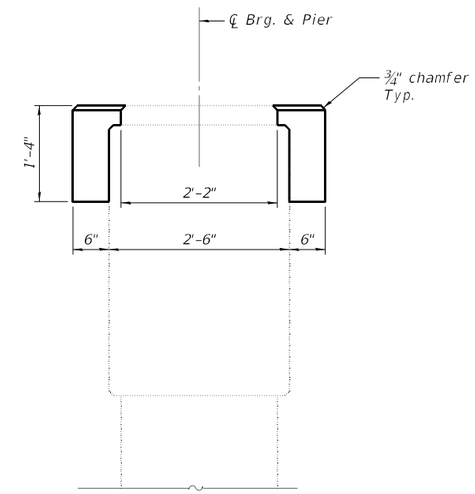

SECTION THRU PIER CAP
PIER 2 (EB)

EXISTING BEAM SEAT ELEVATIONS

Location	Girder 7	Girder 8	Girder 9	Girder 10	Girder 11	Girder 12
Pier 2 (EB)	671.07	671.24	671.34	671.26	671.14	671.99

LEGEND

- Indicates Structural Repair of Concrete (Depth Equal to or Less Than 5 Inches)
- Indicates Structural Repair of Concrete (Depth Greater Than 5 Inches)

See sheet 47 of 49 for Anchor Bolt Layout and Bill of Material..

CEC Cummins Engineering Corporation — ENGINEERS & SURVEYORS	JOB = 2564.3	DESIGNED - AAN	REVISED -
	FILE = 0740069.0070-70024-043.047-Pier-Repair-EB	CHECKED - MDC	REVISED -
	DATE = 4/8/2025	DRAWN - TSH	REVISED -
		CHECKED - MDC	REVISED -

STATE OF ILLINOIS
DEPARTMENT OF TRANSPORTATION

PIER REPAIRS
STRUCTURE NO. 074-0069 (EB)
SHEET NO. 44 OF 49 SHEETS

RTE.	SECTION	COUNTY	TOTAL SHEETS	SHEET NO.
I-72	(74-68VB)B	PIATT	93	80
		CONTRACT NO.		
	ILLINOIS	FED. AID PROJECT		

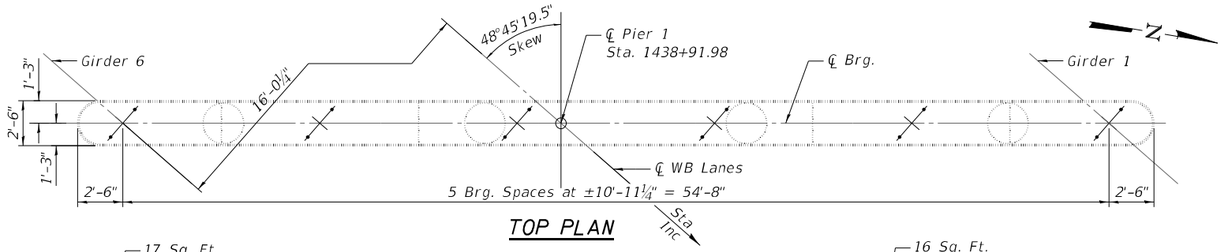

TOP PLAN

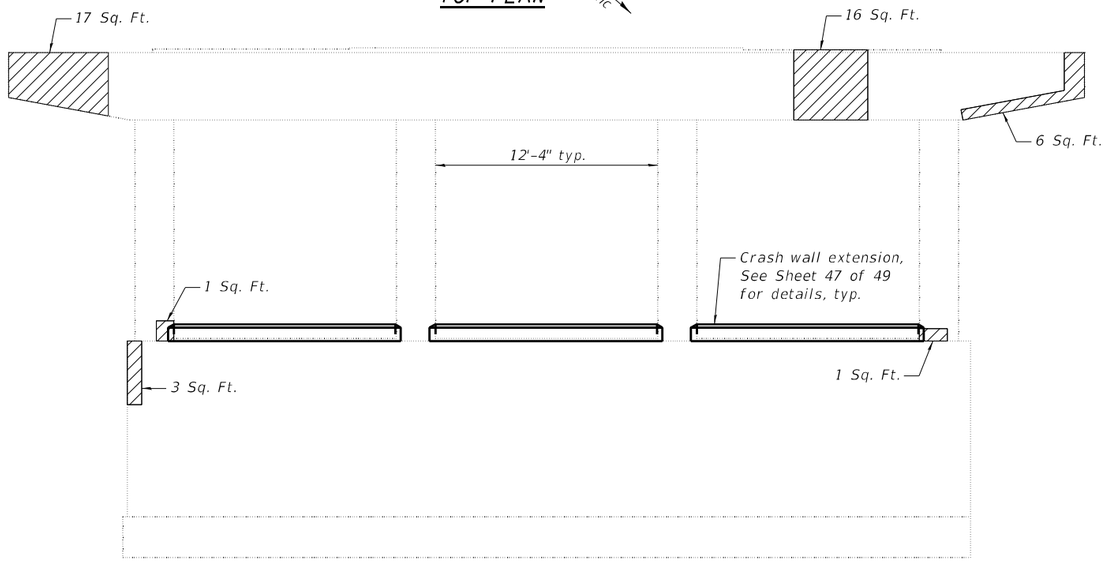

PIER 1

(Looking West)

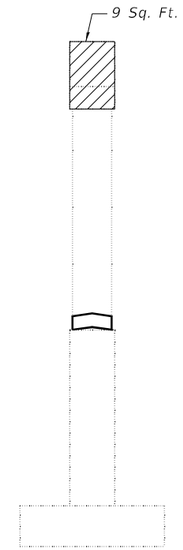

END VIEW

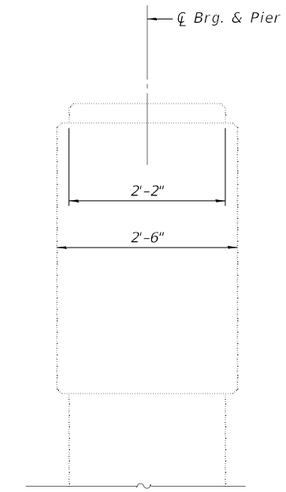

SECTION THRU PIER CAP
PIER 1 (WB)

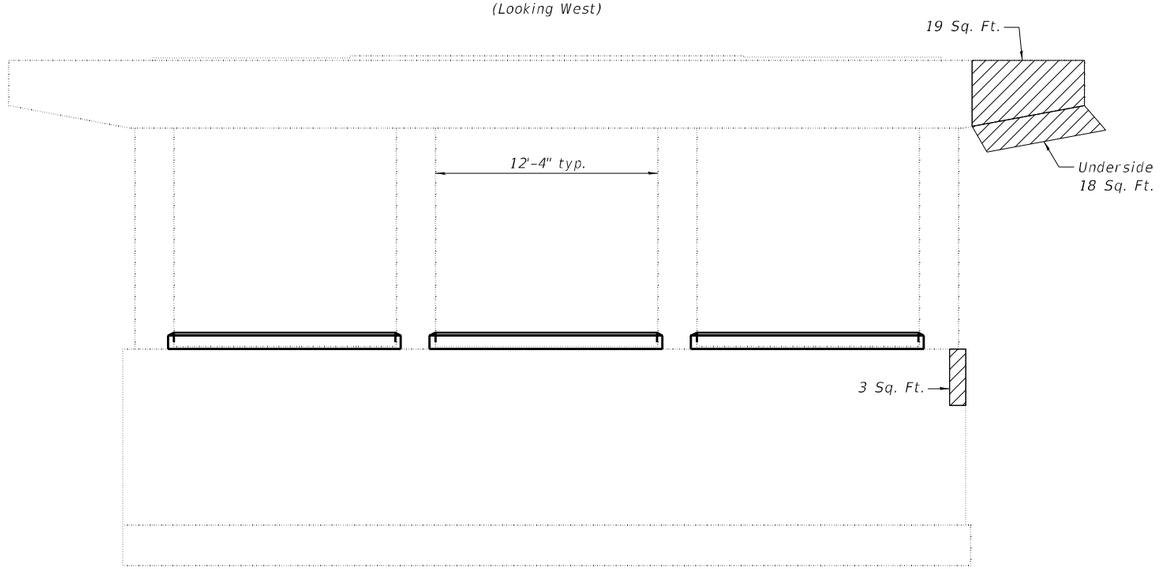

PIER 1

(Looking East)

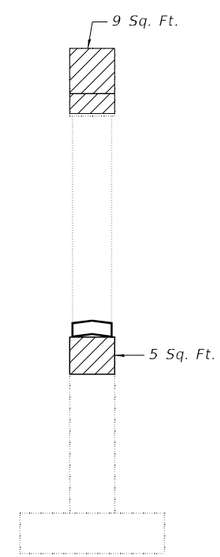

END VIEW

EXISTING BEAM SEAT ELEVATIONS

Location	Girder 1	Girder 2	Girder 3	Girder 4	Girder 5	Girder 6
Pier 1 (WB)	671.10	671.25	671.36	671.37	671.31	671.10

LEGEND

- Indicates Structural Repair of Concrete (Depth Equal to or Less Than 5 Inches)
- Indicates Structural Repair of Concrete (Depth Greater Than 5 Inches)

See sheet 47 of 49 for Anchor Bolt Layout and Bill of Material..

CEC Cummins Engineering Corporation ENGINEERS & SURVEYORS	JOB = 2564.3	DESIGNED - AAN	REVISED -	STATE OF ILLINOIS DEPARTMENT OF TRANSPORTATION	PIER REPAIRS STRUCTURE NO. 074-0070 (WB)	RTE.	SECTION	COUNTY	TOTAL SHEETS	SHEET NO.
	FILE = 07400069.0070-70024-043.047-Pier-Repair	CHECKED - MDC	REVISED -			I-72	(74-68VB)B	PIATT	93	81
	DATE = 4/8/2025	DRAWN - TSH	REVISED -					CONTRACT NO.		
		CHECKED - MDC	REVISED -		SHEET NO. 45 OF 49 SHEETS		ILLINOIS FED. AID PROJECT			

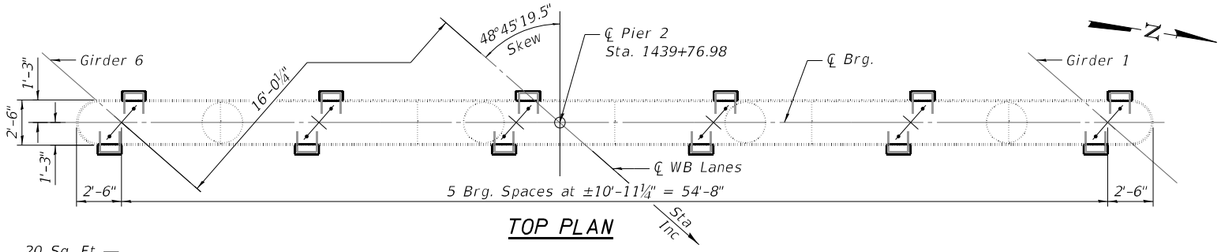

TOP PLAN

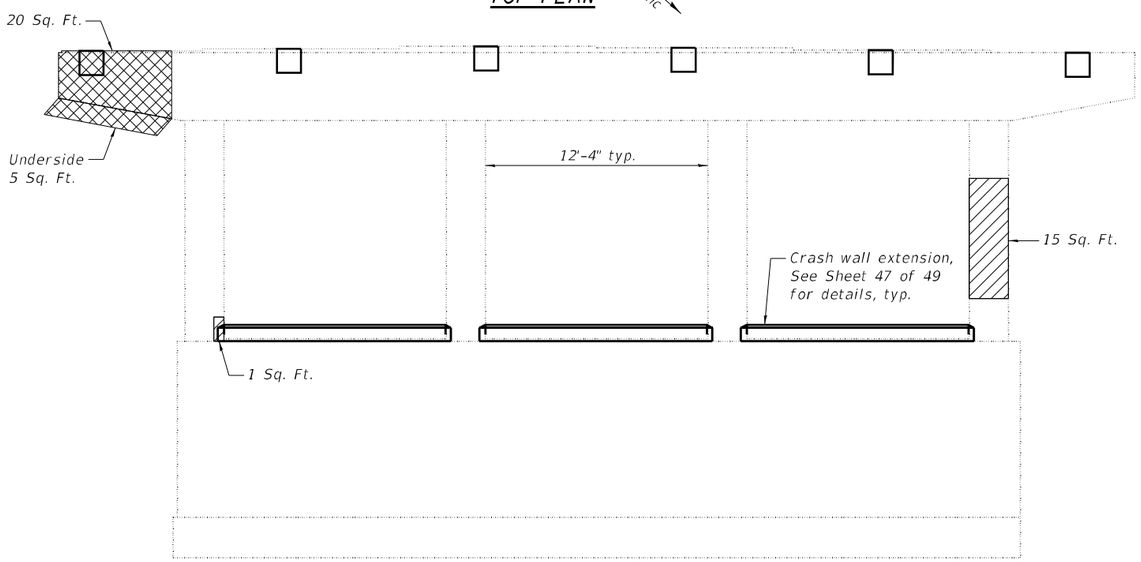

PIER 2
(Looking West)

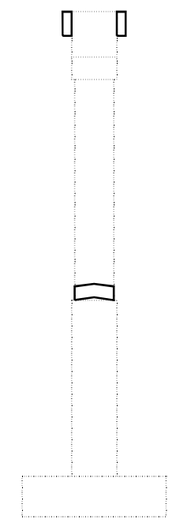

END VIEW

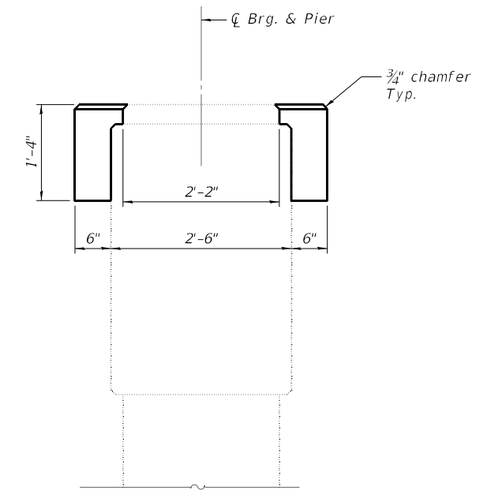

SECTION THRU PIER CAP
PIER 2 (WB)

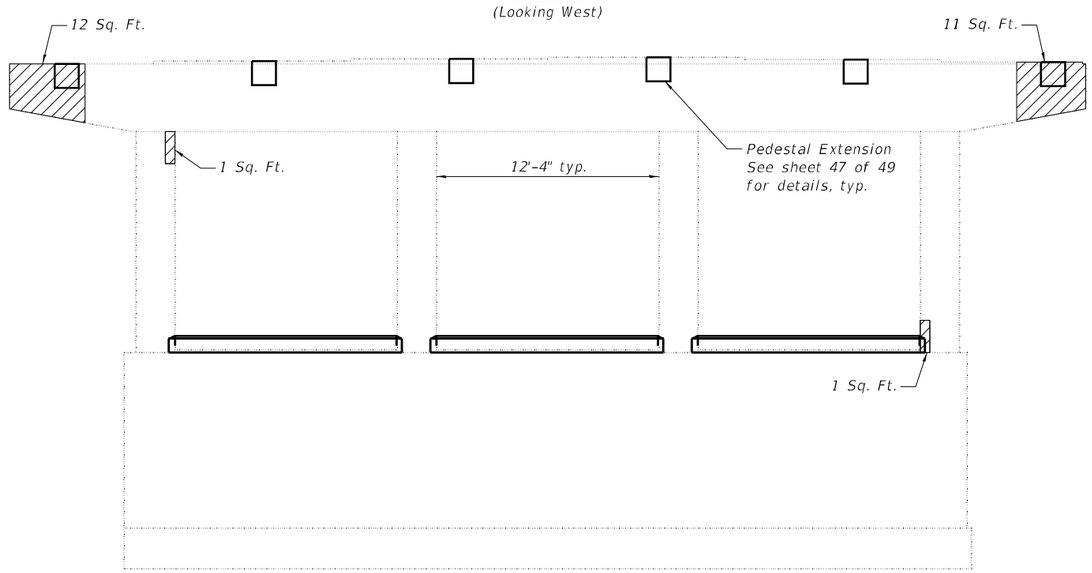

PIER 2
(Looking East)

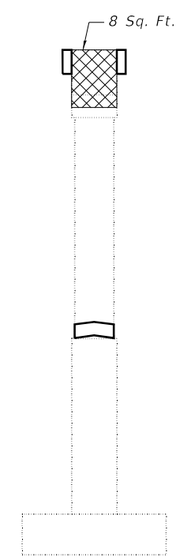

END VIEW

EXISTING BEAM SEAT ELEVATIONS

Location	Girder 1	Girder 2	Girder 3	Girder 4	Girder 5	Girder 6
Pier 2 (WB)	671.05	671.21	671.33	671.42	671.29	671.17

LEGEND

- Indicates Structural Repair of Concrete (Depth Equal to or Less Than 5 Inches)
- Indicates Structural Repair of Concrete (Depth Greater Than 5 Inches)

See sheet 47 of 49 for Anchor Bolt Layout and Bill of Material..

CEC Cummins Engineering Corporation ENGINEERS & SURVEYORS	JOB = 2564.3	DESIGNED - AAN	REVISED -	STATE OF ILLINOIS DEPARTMENT OF TRANSPORTATION	PIER REPAIRS STRUCTURE NO. 074-0070 (WB)	RTE.	SECTION	COUNTY	TOTAL SHEETS	SHEET NO.
	FILE = 0740069.0070-70024-043.047-Pier-Repair	CHECKED - MDC	REVISED -			I-72	(74-68VB)B	PIATT	93	82
	DATE = 4/8/2025	DRAWN - TSH	REVISED -					CONTRACT NO.		
		CHECKED - MDC	REVISED -		SHEET NO. 46 OF 49 SHEETS		ILLINOIS	FED. AID PROJECT		

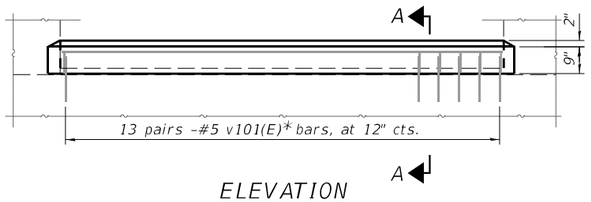

ELEVATION

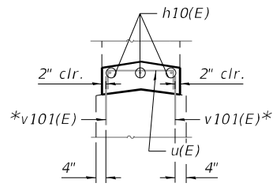

SECTION A-A

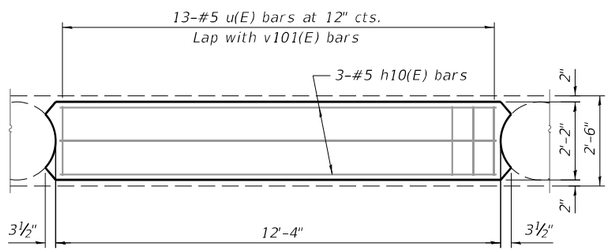

PLAN

CRASHWALL EXTENSION DETAIL

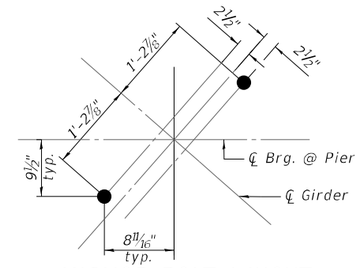

ANCHOR BOLT LAYOUT
AT PIER 2 (EXP.)

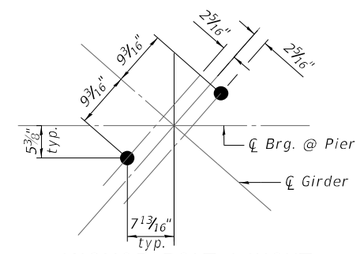

ANCHOR BOLT LAYOUT
AT PIER 1 (FIXED)

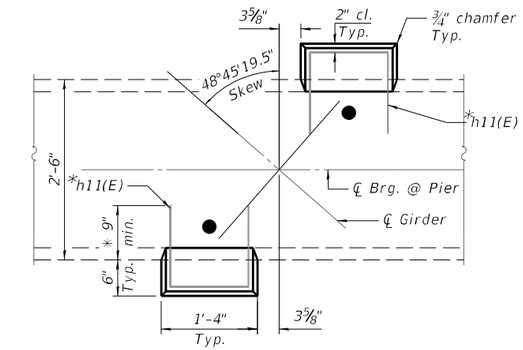

PLAN

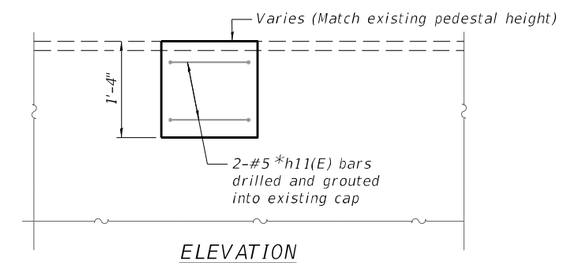

ELEVATION

PEDESTAL EXTENSION DETAIL
PIER 2 (EB)
PIER 2 (WB)
(12 Pedestal Locations Req'd)

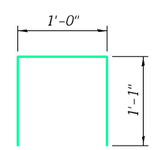

BAR h11(E)

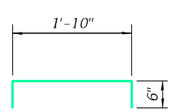

BAR u(E)

S.N. 074-0069 (EB) PIER 1
BILL OF MATERIAL

Bar	No.	Size	Length	Shape
h10(E)	9	#5	12'-0"	——
u(E)	39	#5	2'-10"	⊓
v101(E)	78	#5	1'-3"	——
Concrete Structures			Cu. Yd.	2.3
Reinforcement Bars, Epoxy Coated			Pound	330
Structural Repair of Concrete (Depth Equal to or Less Than 5 Inches)			Sq. Ft.	74
Concrete Sealer			Sq. Ft.	136

S.N. 074-0069 (EB) PIER 2
BILL OF MATERIAL

Bar	No.	Size	Length	Shape
h11(E)	24	#5	3'-2"	⊓
Concrete Structures			Cu. Yd.	0.4
Reinforcement Bars, Epoxy Coated			Pound	80
Structural Repair of Concrete (Depth Equal to or Less Than 5 Inches)			Sq. Ft.	9
Structural Repair of Concrete (Depth Greater Than 5 Inches)			Sq. Ft.	5
Concrete Sealer			Sq. Ft.	53

S.N. 074-0070 (WB) PIER 1
BILL OF MATERIAL

Bar	No.	Size	Length	Shape
h10(E)	9	#5	12'-0"	——
u(E)	39	#5	2'-10"	⊓
v101(E)	78	#5	1'-3"	——
Concrete Structures			Cu. Yd.	2.3
Reinforcement Bars, Epoxy Coated			Pound	330
Structural Repair of Concrete (Depth Equal to or Less Than 5 Inches)			Sq. Ft.	107
Concrete Sealer			Sq. Ft.	136

S.N. 074-0070 (WB) PIER 2
BILL OF MATERIAL

Bar	No.	Size	Length	Shape
h10(E)	9	#5	12'-0"	——
h11(E)	24	#5	3'-2"	⊓
u(E)	39	#5	2'-10"	⊓
v101(E)	78	#5	1'-3"	——
Concrete Structures			Cu. Yd.	2.7
Reinforcement Bars, Epoxy Coated			Pound	410
Structural Repair of Concrete (Depth Equal to or Less Than 5 Inches)			Sq. Ft.	41
Structural Repair of Concrete (Depth Greater Than 5 Inches)			Sq. Ft.	33
Concrete Sealer			Sq. Ft.	189

Notes:

* Epoxy grout h11(E) and v101(E) bars to minimum depth shown in accordance with Article 584 of the Standard Specifications.

A film forming Concrete Sealer shall be applied to all new concrete at pedestals and at all new concrete crashwall extensions.

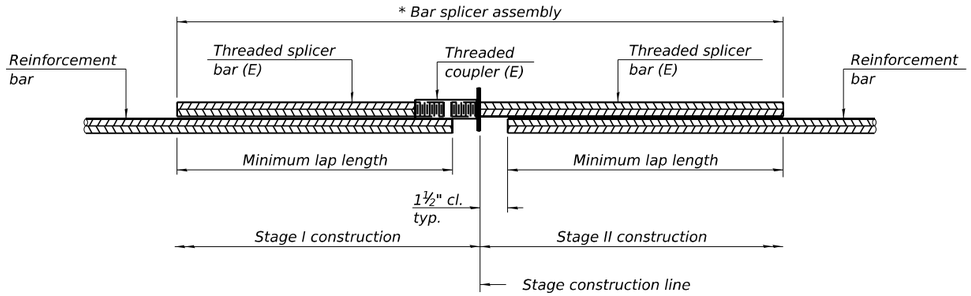

STANDARD BAR SPLICER ASSEMBLY PLAN

Only bar splicer assemblies as presented on the approved QPL list may be used.

Threaded splicer bar length = min. lap length + 1½" + thread length

* Epoxy not required on Bar Splicer Assembly components used in conjunction with black bars.

Location	Bar size	No. assemblies required	Minimum lap length
Deck Slab - Top	#5	1060	3'-0"
Deck Slab - Bottom	#5	648	3'-6"
Deck Slab - Ends	#5	8	3'-4"
Abut. Diaphragm - Back Face	#6	24	4'-0"
Abut. Diaphragm - Front Face	#6	20	See Diaphragm Bar Splicer Detail
Abut. Diaphragm - Backwall	#4	8	2'-8"
Appr. Slab - Top	#5	120	3'-4"
Appr. Slab - Bottom	#8	160	4'-9"
Appr. Slab - Footing	#5	160	3'-2"
Abut. Cap - Backwall	#4	8	2'-11"

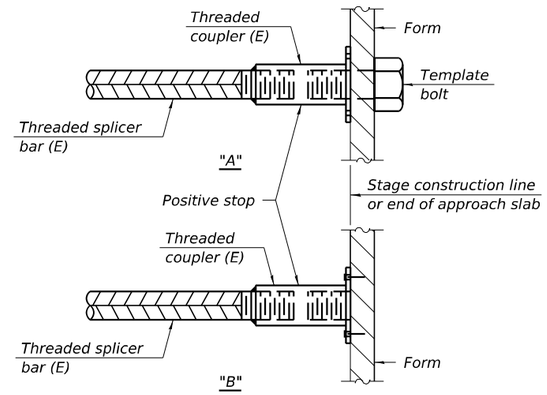

INSTALLATION AND SETTING METHODS

"A" : Set bar splicer assembly by means of a template bolt.
"B" : Set bar splicer assembly by nailing to wood forms or cementing to steel forms.
(E) : Indicates epoxy coating.

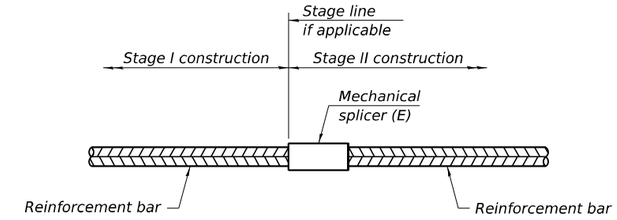

STANDARD MECHANICAL SPLICER

Location	Bar size	No. assemblies required

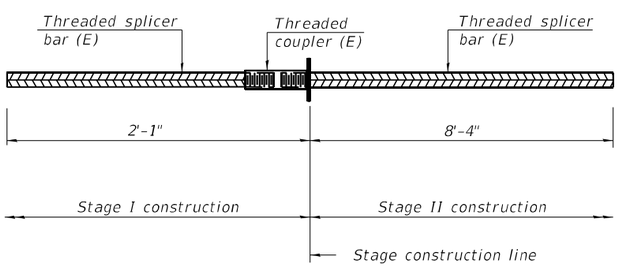

DIAPHRAGM BAR SPLICER DETAIL

Notes:
Splicer bars shall be deformed with threaded ends and have a minimum 60 ksi yield strength.
All reinforcement shall be lapped and tied to the splicer bars.
Bar splicer assemblies shall be epoxy coated according to the requirements for reinforcement bars. See Section 508 of the Standard Specifications.
See approved list of bar splicer assemblies and mechanical splicers for alternatives.

BSD-1 5-15-2023

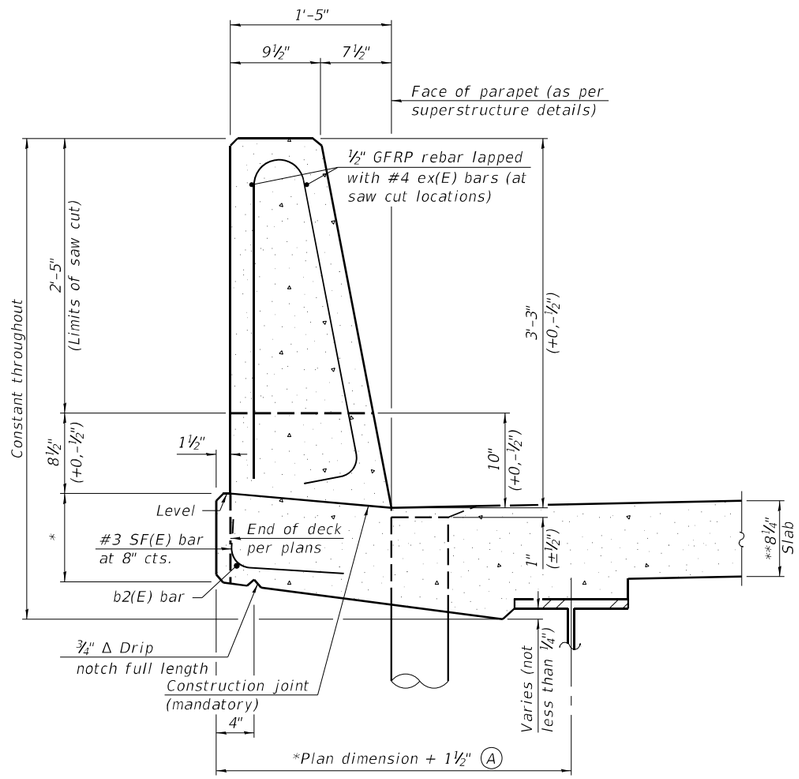

39" CONSTANT-SLOPE PARAPET SECTION

(Showing dimensions, d(E), and ½" Ø GFRP rebar)

*See Superstructure Details.
**Prior to grinding

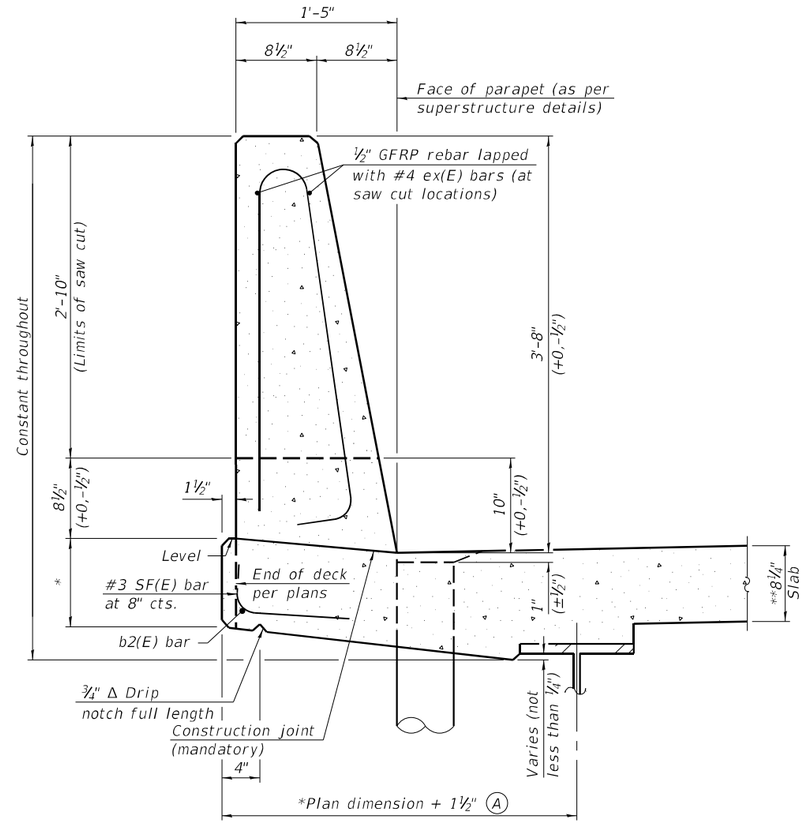

44" CONSTANT-SLOPE PARAPET SECTION

(Showing dimensions, d(E), and ½" Ø GFRP rebar)

Notes:

All dimensions shall remain the same as shown on superstructure details, except dimension A which is to be revised as shown. Additional concrete needed to revise dimension A = 0.00348 cu. yds./ft. for 39" and 44" parapets.

Place full depth aluminum sheets as shown on superstructure details.

Replace all cork joint filler locations with a full thickness saw cut.

Steel superstructure shown. Other superstructure types similar.

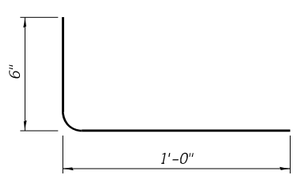

#3 SF(E) BAR

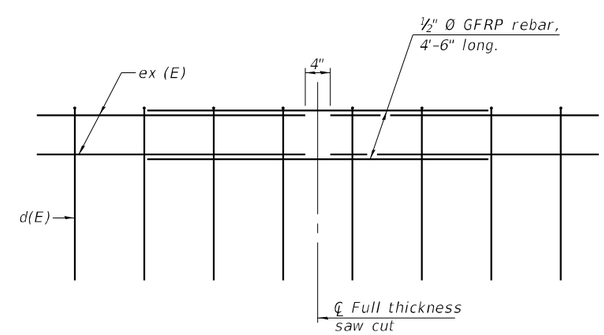

GFRP REBAR STIFFENING DETAIL

(Place as shown in parapet section at each parapet joint location.)

SFP 39-44 1-1-2020

CEC Cummins Engineering Corporation ENGINEERS & SURVEYORS	JOB = 2564.3	DESIGNED - AAN	REVISED -	STATE OF ILLINOIS DEPARTMENT OF TRANSPORTATION	CONCRETE PARAPET SLIPFORMING OPTION STRUCTURE NO. 074-0069 (EB) AND 074-0070 (WB)	F.A.I.	SECTION	COUNTY	TOTAL SHEETS / SHEET NO.
	FILE = 0740069_0070-70024-049-Slipform.dgn	CHECKED - MDC	REVISED -			72	(74-68VB)B	PIATT	93 / 85
	DATE = 3/12/2025	DRAWN - TSH	REVISED -					CONTRACT NO. 70024	
		CHECKED - MDC	REVISED -		SHEET NO. 49 OF 49 SHEETS		ILLINOIS FED. AID PROJECT		

CENTERLINE INTERSTATE OR MULTI-LANE TWO WAY DIVIDED HIGHWAY

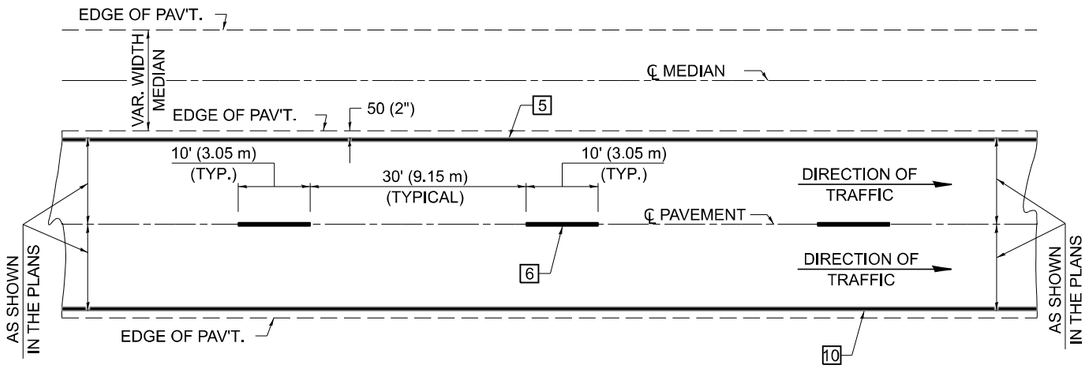

NOTE: PAVEMENT MARKINGS ARE TO BE EXTENDED THROUGH OMISSIONS WHEN APPLICABLE.

NOTE: SEE ARTICLES 780.04 & 781.03 FOR LOCATION OF STRIPES AND MARKERS RELATIVE TO EDGES OR JOINTS.

FOR RAISED REFLECTIVE PAVEMENT MARKERS, REFER TO STANDARD 781001.

TYPICAL PAVEMENT MARKING LEGEND

1 4" (100) SKIP-DASH (YELLOW)

2 4" (100) SOLID (YELLOW)

3 12" (300) DIAGONAL (YELLOW)

4 4" (100) DOUBLE YELLOW (NARROW)

5 6" (150) SOLID (YELLOW)

6 6" (150) SKIP-DASH (WHITE)

7 4" (100) SKIP-DASH (WHITE)

8 4" (100) SOLID (WHITE)

9 12" (300) DIAGONAL (WHITE)

10 6" (150) SOLID (WHITE)

11 24" (600) STOP BAR (WHITE)

12 8" (200) SOLID (WHITE)

13 6" (150) LANE LINE EXTENSIONS (WHITE)

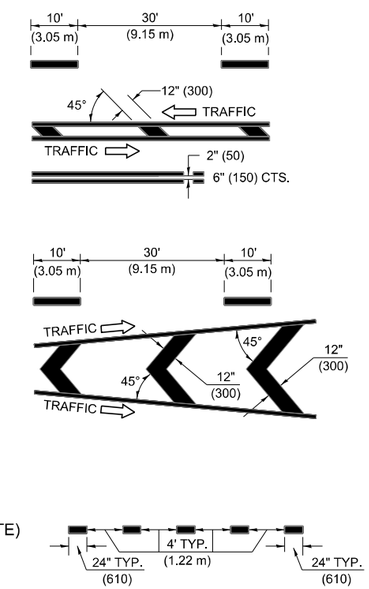

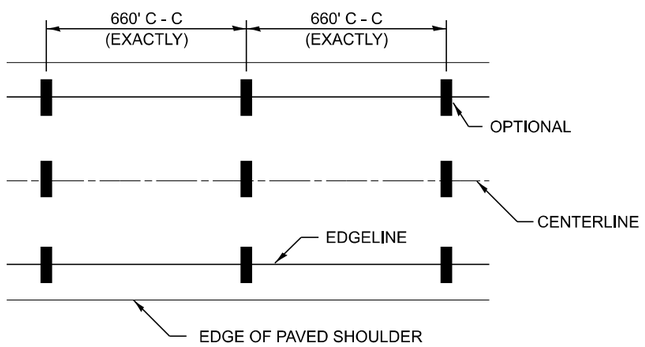

IT WILL BE NECESSARY TO HAVE A REPRESENTATIVE OF THE STATE POLICE PRESENT SO THAT THE ACCURACY OF MEASUREMENT CAN BE ATTESTED TO IN COURT.

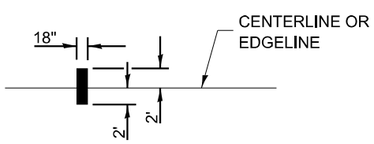

AERIAL SPEED CHECK ZONES

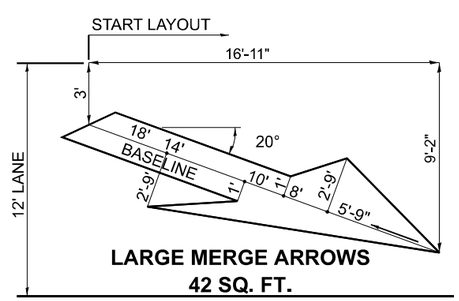

LARGE MERGE ARROWS
42 SQ. FT.

TYPICAL EXIT RAMP TERMINAL

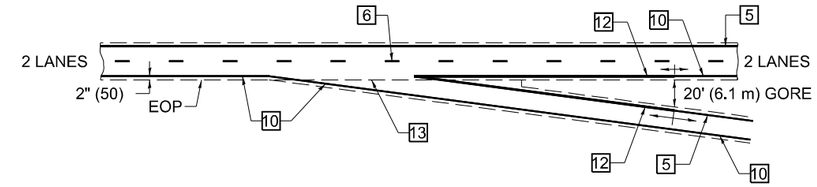

EXIT RAMP TERMINAL WITH EXCLUSIVE (AUXILIARY) LANE

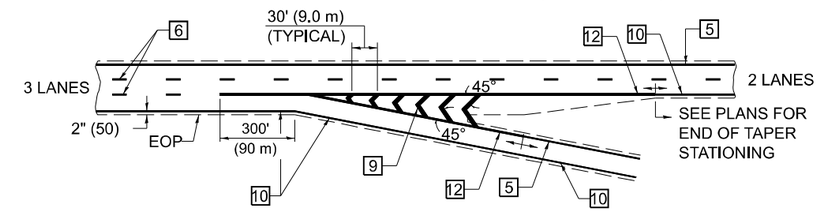

TYPICAL ENTRANCE RAMP TERMINAL

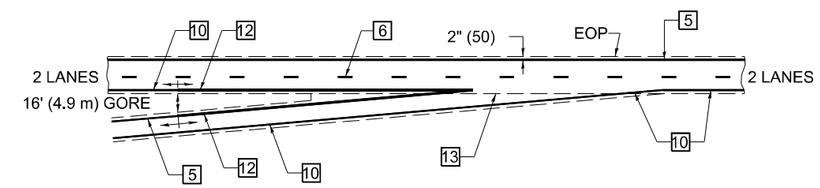

ENTRANCE RAMP TERMINAL WITH EXCLUSIVE LANE

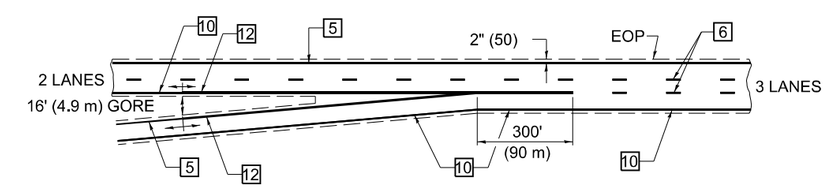

Note: All dimensions are in INCHES (millimeters) unless otherwise shown.

DISTRICT 5 DETAIL NO. 7800BBBB

CEC Cummins Engineering Corporation
ENGINEERS & SURVEYORS

JOB = 2564.4	DESIGNED - CGF	REVISED -
FILE NAME = D570024-sht-details2.dgn	DRAWN - CDS	REVISED -
PLOT SCALE = $SCALE$	CHECKED - CGF	REVISED -
PLOT DATE = 3/6/2025	DATE - 4/23/2024	REVISED -

STATE OF ILLINOIS
DEPARTMENT OF TRANSPORTATION

PAVEMENT MARKING (INTERSTATE & MULTI-LANE APPLICATIONS)

SCALE: | SHEET OF SHEETS | STA. TO STA.

F.A.I. RTE.	SECTION	COUNTY	TOTAL SHEETS	SHEET NO.
72	(74-68VB)B	PIATT	93	86
		CONTRACT NO. 70024		
		ILLINOIS	FED. AID PROJECT	

MODEL: Default
FILE NAME: H:\Support\IDOT_CONNECT\Con Function\WorkSpaces\IDOT\CAD CONNECT\WorkSets\2564.4 Piatt Bridge Replacement\CADD Data\CAD Sheets\D570024-sht-details2.dgn

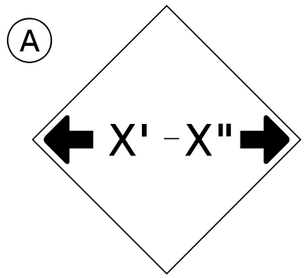

W12-2(0)-48"x48"(1200x1200)

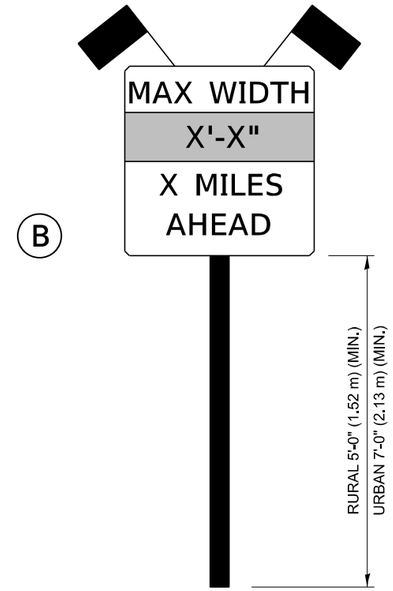

SIGN PANEL, TYPE II

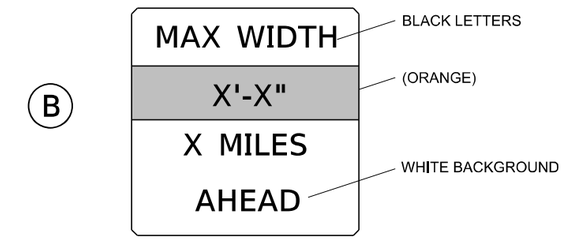

W12-I103(O)-48"x48"(1200x1200)
"D" LETTERS/NUMBERS

SIGN (A) 2 SIGNS - W12-2(O)-48"x48"(1200x1200) ARE TO BE PLACED AS SHOWN IN THE PLANS OR AS DIRECTED BY THE ENGINEER.

SIGN (B) 2 SIGNS - (SIGN PANEL, TYPE II) AS SHOWN ARE TO BE PLACED AS SHOWN IN THE PLANS OR AS DIRECTED BY THE ENGINEER.

GENERAL NOTES

1. ALL TRAFFIC CONTROL DEVICES SHALL BE FURNISHED, ERECTED AND MAINTAINED BY THE CONTRACTOR.
2. ALL (B) SIGNS SHALL HAVE FLAGS INSTALLED UNLESS OTHERWISE DIRECTED.
3. LOCATIONS OF TRAFFIC CONTROL DEVICES MAY BE ADJUSTED BY THE ENGINEER.
4. ALL TRAFFIC CONTROL SHOWN ON THIS SHEET SHALL BE PAID FOR AT THE CONTRACT LUMP SUM PRICE FOR WIDTH RESTRICTION SIGNING.
5. ALL SIGNS SHALL BE POST MOUNTED UNLESS OTHERWISE DIRECTED.
6. ALL SIGNS SHOWN ORANGE (O) SHALL BE FLUORESCENT ORANGE.
7. ALL SIGNS SHOWN SHALL CONSIST OF THE CURRENT RETROREFLECTIVE SHEETING REQUIREMENTS AS OUTLINED IN SECTION 1106.01 OF THE STANDARD SPECIFICATIONS BOOK.

Note: All dimensions are in INCHES (millimeters) unless otherwise shown.

DISTRICT 5 DETAIL NO. X7200201

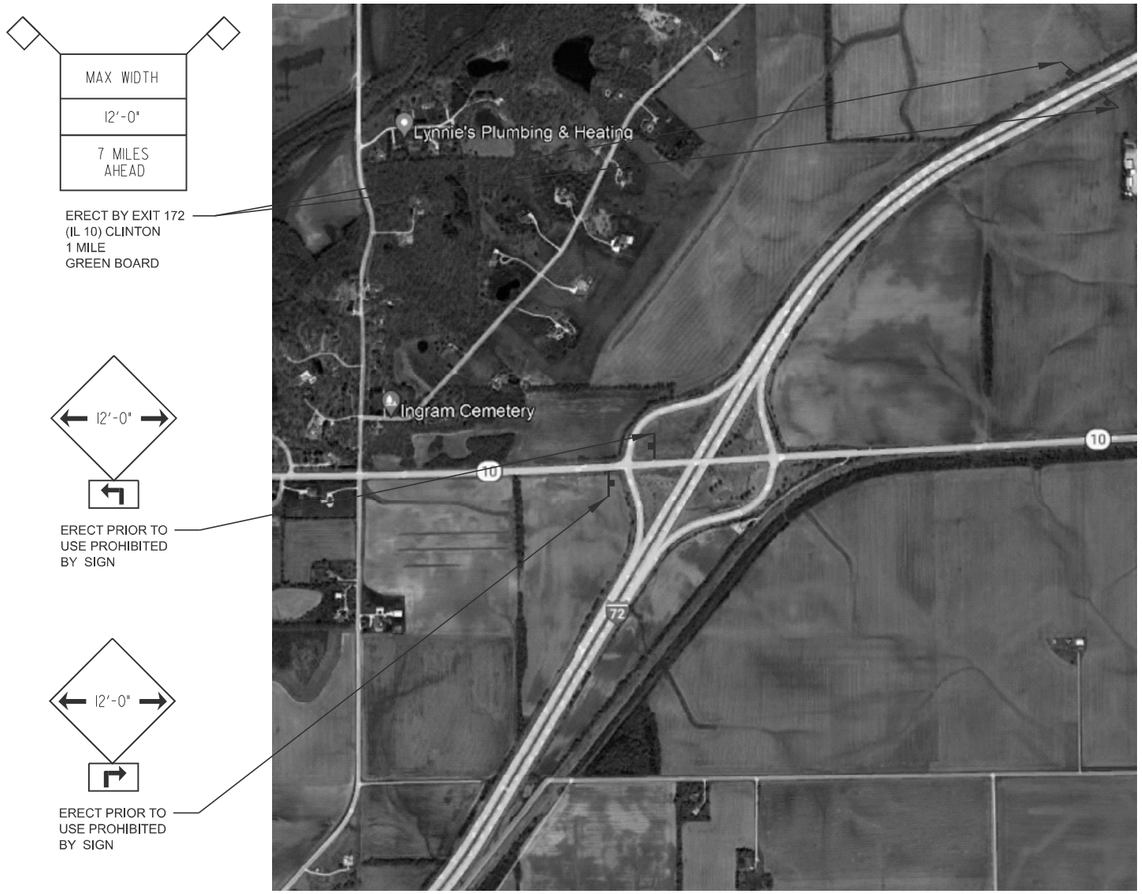

MODEL: VRS 2 [Sheet]
FILE NAME: H:\Support\IDOT_CONNECT\Con curation\WorkSpaces\IDOTCAD CONNECT\WorkSets\2564.4 Piatt Bridge Replacement\CADD Data\CAD Sheets\D570024-sht-details3.dgn

CEC Cummins Engineering Corporation
ENGINEERS & SURVEYORS

JOB = 2564.4	DESIGNED - CDS	REVISED -	
FILE NAME = D570024-sht-details3.dgn	DRAWN - CDS	REVISED -	
PLOT SCALE = $SCALE$	CHECKED - CGF	REVISED -	
PLOT DATE = 3/12/2025	DATE - 1/09/2025	REVISED -	

STATE OF ILLINOIS
DEPARTMENT OF TRANSPORTATION

WIDTH RESTRICTION SIGNING DETAILS
PRE-STAGE C & PRE-STAGE D

SCALE: | SHEET OF SHEETS | STA. TO STA.

F.A.I. RTE.	SECTION	COUNTY	TOTAL SHEETS	SHEET NO.
72	(74-68VB)B	PIATT	93	88
		CONTRACT NO. 70024		
	ILLINOIS	FED. AID PROJECT		

MAX WIDTH
12'-0"
1 1/2 MILES AHEAD

ERECT BY EXIT 166
(IL 105) WEST
MARKET ST
1/2 MILE
GREEN BOARD

12'-0"

ERECT PRIOR TO
USE PROHIBITED
BY SIGN

12'-0"

ERECT PRIOR TO
USE PROHIBITED
BY SIGN

12'-0"

ERECT PRIOR TO
USE PROHIBITED
BY SIGN

MAX WIDTH
12'-0"
2 1/2 MILES AHEAD

ERECT BY EXIT 164
BRIDGE ST
1 MILE
GREEN BOARD

12'-0"

ERECT PRIOR TO
USE PROHIBITED
BY SIGN

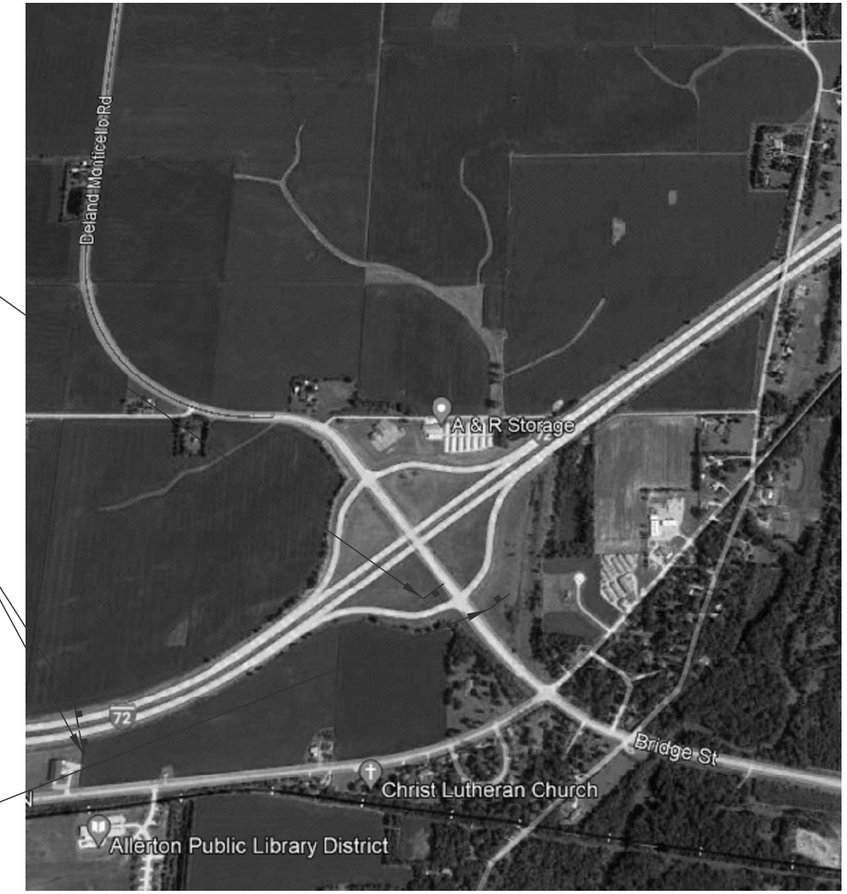

MODEL: WRS 3 [Sheet]
FILE NAME: n:\Support\IDOT_CONNECT\Con guration\WorkSpaces\IDOTCAD CONNECT\WorkSets\2564.4 Piatt Bridge Replacement\CADD Data\CAD Sheets\D570024-sht-details3.dgn

CEC Cummins Engineering Corporation
ENGINEERS & SURVEYORS

JOB = 2564.4	DESIGNED - CDS	REVISED -	
FILE NAME = D570024-sht-details3.dgn	DRAWN - CDS	REVISED -	
PLOT SCALE = $SCALE$	CHECKED - CGF	REVISED -	
PLOT DATE = 3/12/2025	DATE - 1/09/2025	REVISED -	

STATE OF ILLINOIS
DEPARTMENT OF TRANSPORTATION

WIDTH RESTRICTION SIGNING DETAILS
PRE-STAGE C & PRE-STAGE D

SCALE: | SHEET OF SHEETS | STA. TO STA.

F.A.I. RTE.	SECTION	COUNTY	TOTAL SHEETS	SHEET NO.
72	(74-68VB)B	PIATT	93	89
		CONTRACT NO. 70024		
	ILLINOIS	FED. AID PROJECT		

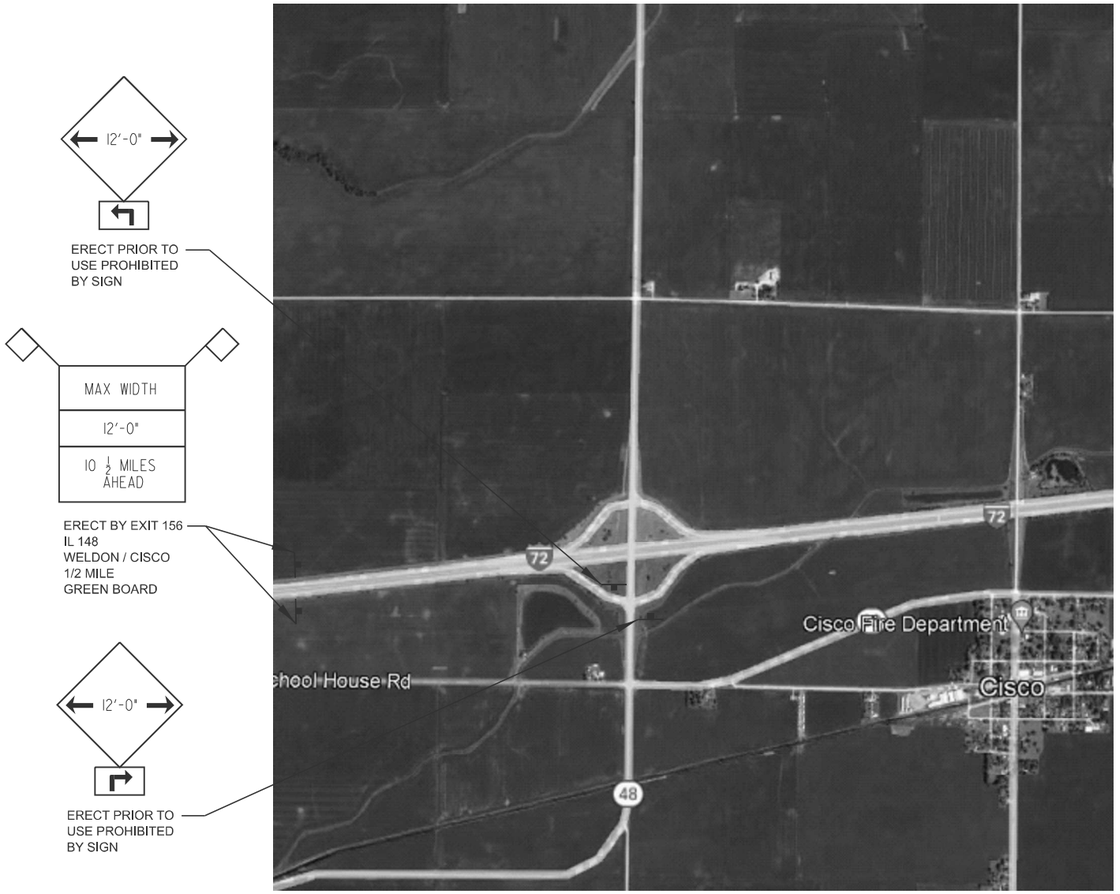

MODEL: WRS 4 (Sheet)
FILE NAME: H:\Support\IDOT_CONNECT\Con guration\WorkSpaces\IDOTCAD CONNECT\WorkSets\2564_4 Piatt Bridge Replacement\CADD Data\CAD Sheets\D570024-sht-details3.dgn

CEC Cummins Engineering Corporation — ENGINEERS & SURVEYORS	JOB = 2564.4	DESIGNED - CDS	REVISED -	STATE OF ILLINOIS DEPARTMENT OF TRANSPORTATION
	FILE NAME = D570024-sht-details3.dgn	DRAWN - CDS	REVISED -	
	PLOT SCALE = $SCALE$	CHECKED - CGF	REVISED -	
	PLOT DATE = 3/12/2025	DATE - 1/09/2025	REVISED -	

WIDTH RESTRICTION SIGNING DETAILS
PRE-STAGE C & PRE-STAGE D

SCALE: | SHEET OF SHEETS | STA. TO STA.

F.A.I. RTE.	SECTION	COUNTY	TOTAL SHEETS	SHEET NO.
72	(74-68VB)B	PIATT	93	90
		CONTRACT NO. 70024		
	ILLINOIS	FED. AID PROJECT		

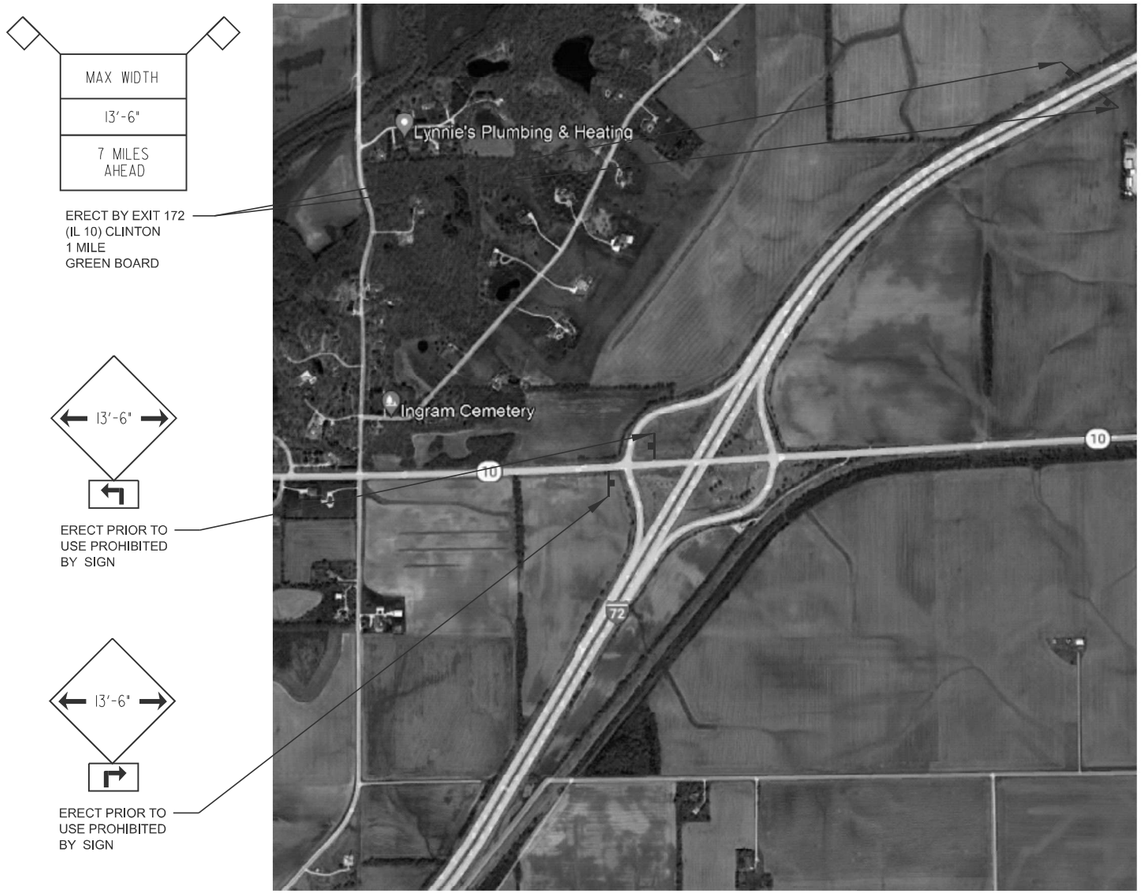

MODEL: VPS 2 [Sheet]
FILE NAME: H:\Support\IDOT_CONNECT\Con guration\WorkSpaces\IDOTCAD CONNECT\WorkSets\2564.4 Piatt Bridge Replacement\CADD Data\CAD Sheets\D570024-sht-details3.dgn

CEC Cummins Engineering Corporation ENGINEERS & SURVEYORS	JOB = 2564.4	DESIGNED - CDS	REVISED -	STATE OF ILLINOIS DEPARTMENT OF TRANSPORTATION	WIDTH RESTRICTION SIGNING DETAILS STAGE 1 & STAGE 2
	FILE NAME = D570024-sht-details3.dgn	DRAWN - CDS	REVISED -		
	PLOT SCALE = $SCALE$	CHECKED - CGF	REVISED -		SCALE: SHEET OF SHEETS STA. TO STA.
	PLOT DATE = 3/12/2025	DATE - 1/09/2025	REVISED -		

F.A.I. RTE.	SECTION	COUNTY	TOTAL SHEETS	SHEET NO.
72	(74-68VB)B	PIATT	93	91
		CONTRACT NO. 70024		
	ILLINOIS	FED. AID PROJECT		

MAX WIDTH
13'-6"
1 1/2 MILES AHEAD

ERECT BY EXIT 166
(IL 105) WEST
MARKET ST
1/2 MILE
GREEN BOARD

13'-6"

ERECT PRIOR TO
USE PROHIBITED
BY SIGN

13'-6"

ERECT PRIOR TO
USE PROHIBITED
BY SIGN

13'-6"

ERECT PRIOR TO
USE PROHIBITED
BY SIGN

MAX WIDTH
13'-6"
2 1/2 MILES AHEAD

ERECT BY EXIT 164
BRIDGE ST
1 MILE
GREEN BOARD

13'-6"

ERECT PRIOR TO
USE PROHIBITED
BY SIGN

MODEL: WRS 3 [Sheet]
FILE NAME: n:\Support\IDOT_CONNECT\Con guration\WorkSpaces\IDOTCAD CONNECT\WorkSets\2564.4 Piatt Bridge Replacement\CADD Data\CAD Sheets\D570024-sht-details3.dgn

CEC Cummins Engineering Corporation
ENGINEERS & SURVEYORS

JOB = 2564.4	DESIGNED - CDS	REVISED -	
FILE NAME = D570024-sht-details3.dgn	DRAWN - CDS	REVISED -	
PLOT SCALE = $SCALE$	CHECKED - CGF	REVISED -	
PLOT DATE = 3/12/2025	DATE - 1/09/2025	REVISED -	

STATE OF ILLINOIS
DEPARTMENT OF TRANSPORTATION

WIDTH RESTRICTION SIGNING DETAILS
STAGE 1 & STAGE 2

SCALE: | SHEET OF SHEETS | STA. TO STA.

F.A.I. RTE.	SECTION	COUNTY	TOTAL SHEETS	SHEET NO.
72	(74-68VB)B	PIATT	93	92
		CONTRACT NO. 70024		
	ILLINOIS	FED. AID PROJECT		

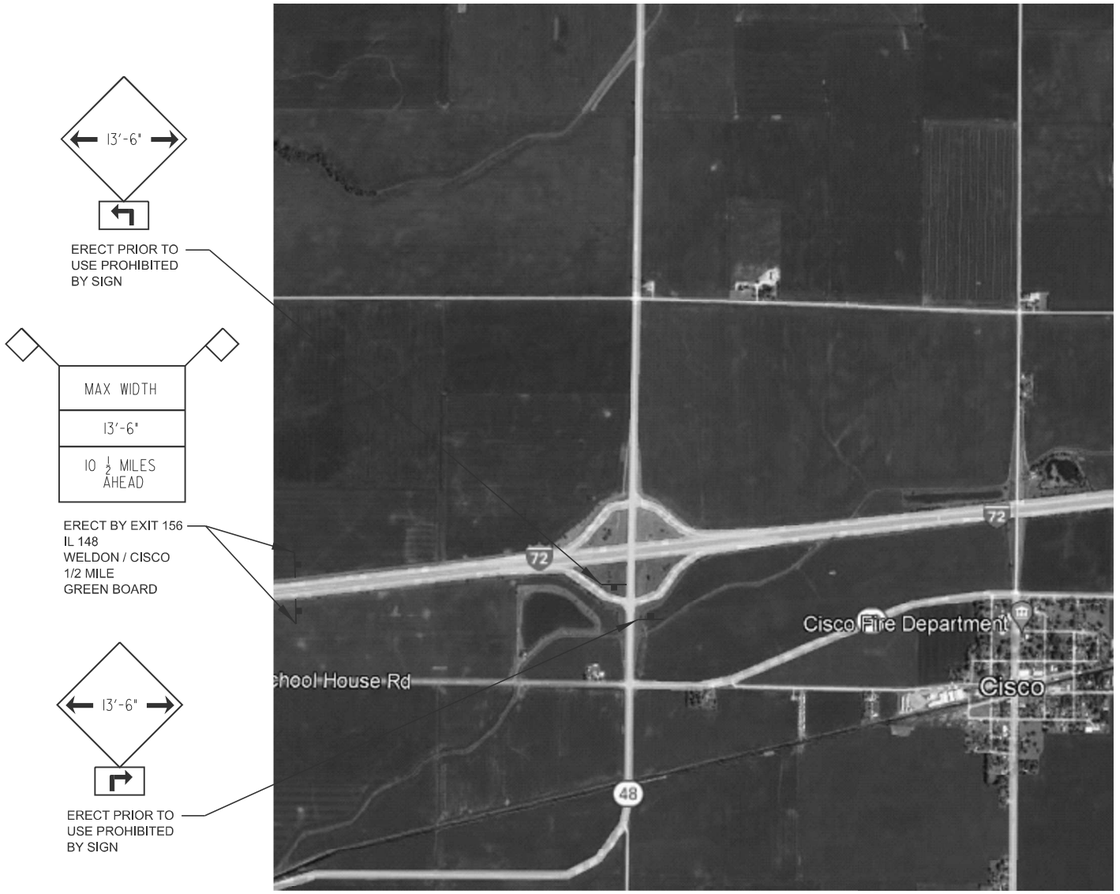

MODEL: WRS 4 (Sheet)
FILE NAME: H:\Support\IDOT_CONNECT\Con guration\WorkSpaces\IDOTCAD CONNECT\WorkSets\2564_4 Piatt Bridge Replacement\CADD Data\CAD Sheets\D570024-sht-details3.dgn

CEC Cummins Engineering Corporation ENGINEERS & SURVEYORS	JOB = 2564.4	DESIGNED - CDS	REVISED -	STATE OF ILLINOIS DEPARTMENT OF TRANSPORTATION
	FILE NAME = D570024-sht-details3.dgn	DRAWN - CDS	REVISED -	
	PLOT SCALE = $SCALE$	CHECKED - CGF	REVISED -	
	PLOT DATE = 3/12/2025	DATE - 1/09/2025	REVISED -	

WIDTH RESTRICTION SIGNING DETAILS
STAGE 1 & STAGE 2

SCALE: | SHEET OF SHEETS | STA. TO STA.

F.A.I. RTE.	SECTION	COUNTY	TOTAL SHEETS	SHEET NO.
72	(74-68VB)B	PIATT	93	93
		CONTRACT NO. 70024		
	ILLINOIS	FED. AID PROJECT		