F.A.I. RTE.	SECTION	COUNTY	TOTAL SHEETS	SHEET NO.
80	(32, 47-4)VB, HBR-3	GRUNDY/KENDALL	143	1
		ILLINOIS	CONTRACT NO. 66295	

STATE OF ILLINOIS

08-01-2025 LETTING ITEM 087

DEPARTMENT OF TRANSPORTATION

FOR INDEX OF SHEETS, SEE SHEET NO. 2

FOR LIST OF HIGHWAY STANDARDS, SEE SHEET NO. 2

PROJECT IS LOCATED IN THE VILLAGE OF MINOOKA

PROPOSED HIGHWAY PLANS

F.A.I. 80 (I-80)
SECTION ((32, 47-4)VB, HBR-3)BR, BRR
PROJECT NHPP-FLHE(770)
STRUCTURE REPLACEMENT & BRIDGE REPAIRS
GRUNDY COUNTY

D-93-021-15

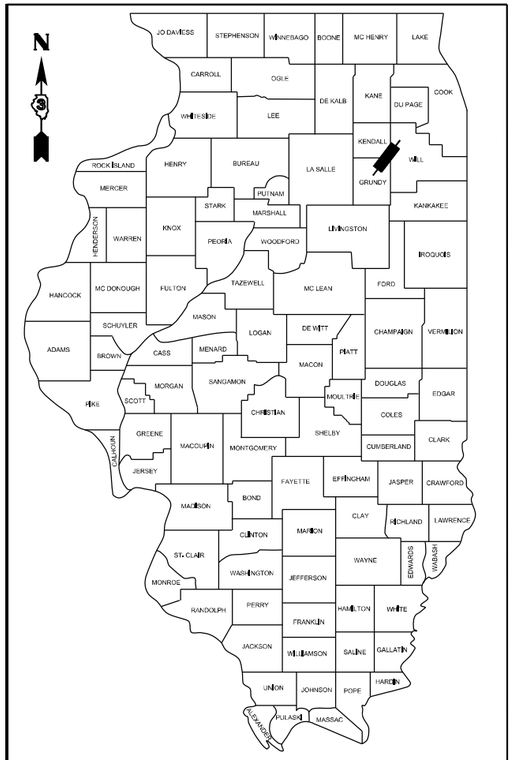

LOCATION OF SECTION INDICATED THUS: -

LIN ENGINEERING, LTD.
Consulting Engineers
Westmont, Illinois

TRAFFIC DATA:

INTERSTATE 80
S.N. 032-9901 2021 ADT = 50,300

FUNCTIONAL CLASSIFICATION = INTERSTATE (I-80) (RURAL)

DESIGN SPEED = 75 MPH (ASSUMED)

POSTED SPEED = 70 MPH

P.V. 74.0 % S.U. 20.3 % M.U. 5.7 %

WABENA RD
S.N. 032-0065 2019 ADT = 3,550

FUNCTIONAL CLASSIFICATION = MAJOR COLLECTOR

DESIGN SPEED = 30 MPH (ASSUMED)

POSTED SPEED = 25 MPH

P.V. 100.0 % S.U. 0.0 % M.U. 0.0 %

C-93-125-02

R. 8. E.

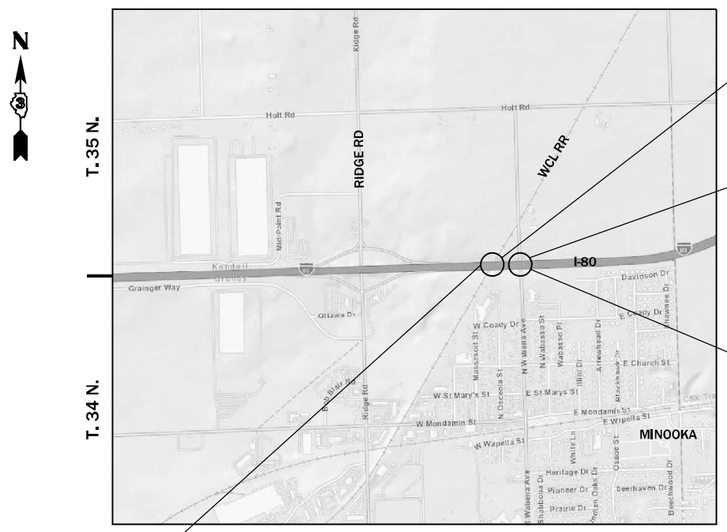

SEWARD & AUX SABLE TOWNSHIP

I-80
EX. S.N. 032-9901
PR. S.N. 032-9906
STA 1731+17.33

BRIDGE REPAIR
S.N. 032-0065
STA 1735+96.90

END IMPROVEMENTS
STA 1735+98.40

BEGIN IMPROVEMENTS
STA 1727+89.68

LOCATION MAP

NOT TO SCALE

GROSS LENGTH = 1590.66 FT. = 0.30 MILES
NET LENGTH = 577.17 FT. = 0.11 MILES

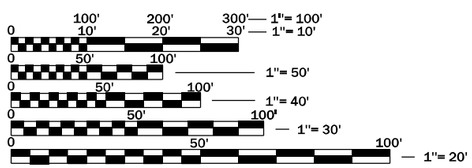

FULL SIZE PLANS HAVE BEEN PREPARED USING STANDARD ENGINEERING SCALES. REDUCED SIZED PLANS WILL NOT CONFORM TO STANDARD SCALES. IN MAKING MEASUREMENTS ON REDUCED PLANS, THE ABOVE SCALES MAY BE USED.

J.U.L.I.E.
JOINT UTILITY LOCATION INFORMATION FOR EXCAVATION
1-800-892-0123
OR 811

STATE OF ILLINOIS
DEPARTMENT OF TRANSPORTATION

SUBMITTED February 4, 20 25
Trisha Thompson
REGIONAL ENGINEER

March 21, 20 25
ENGINEER OF DESIGN AND ENVIRONMENT

March 21, 20 25
DIRECTOR OF HIGHWAYS, PROJECT IMPLEMENTATION

PROJECT ENGINEER: DAVID ALEXANDER, P.E.
UNIT CHIEF: MOHAMED YOUSIF
DISTRICT 3 NO. (815) 434-6131
CONTRACT NO. 66295

PRINTED BY THE AUTHORITY OF THE STATE OF ILLINOIS

REV. 3/5/25

INDEX OF SHEETS

HIGHWAY STANDARDS

000001-08	STANDARD SYMBOLS, ABBREVIATIONS AND PATTERNS
001006	DECIMAL OF AN INCH AND OF A FOOT
280001-07	TEMPORARY EROSION CONTROL SYSTEMS
420001-10	PAVEMENT JOINTS
421001-03	BAR REINFORCEMENT FOR CRC PAVEMENT
515001-04	NAME PLATE FOR BRIDGES
542411	SLOPED METAL END SECTIONS FOR PIPE CULVERTS
630001-13	STEEL PLATE BEAM GUARDRAIL
630201-07	PCC/HMA STABILIZATION AT STEEL PLATE BEAM GUARDRAIL
630301-09	SHOULDER WIDENING FOR TYPE 1 (SPECIAL) GUARDRAIL TERMINALS
631011-10	TRAFFIC BARRIER TERMINAL, TYPE 2
631031-18	TRAFFIC BARRIER TERMINAL, TYPE 6
631033-09	TRAFFIC BARRIER TERMINAL, TYPE 6B
637006-05	CONCRETE BARRIER DOUBLE FACE, 44 in. (1120 mm) HEIGHT
701101-05	OFF-RD OPERATIONS, MULTILANE, 15' (4.5 M) TO 24" (600 MM) FROM PAVEMENT EDGE
701106-02	OFF-RD OPERATIONS, MULTILANE, MORE THAN 15' (4.5 M) AWAY
701400-12	APPROACH TO LANE CLOSURE, FREEWAY/EXPRESSWAY
701401-13	LANE CLOSURE, FREEWAY/EXPRESSWAY
701411-09	LANE CLOSURE, MULTILANE, AT ENTRANCE OR EXIT RAMP, FOR SPEEDS ≥ 45 MPH
701428-01	TRAFFIC CONTROL SETUP AND REMOVAL FREEWAY/EXPRESSWAY
701446-11	TWO LANE CLOSURE, FREEWAY/EXPRESSWAY
701901-10	TRAFFIC CONTROL DEVICES
704001-08	TEMPORARY CONCRETE BARRIER
725001-01	OBJECT AND TERMINAL MARKERS
780001-05	TYPICAL PAVEMENT MARKINGS
781001-04	TYPICAL APPLICATIONS RAISED REFLECTIVE PAVEMENT MARKERS
BLR 21-9	TYPICAL APPLICATION OF TRAFFIC CONTROL DEVICES FOR CONSTRUCTION ON RURAL LOCAL HIGHWAYS

DISTRICT STANDARDS

701-1	TOTAL INTERSTATE CLOSURE AT NIGHT - USE RAMPS FOR DETOUR
701-12	SMART WORK ZONE DETAIL
780-12	RAMP PAVEMENT MARKING
782-5	LINEAR DELINEATOR APPLICATION TO STANDARD GALVANIZED GUARDRAIL
782-6	LINEAR DELINEATOR PANELS FOR TEMPORARY CONCRETE BARRIER

GENERAL NOTES

THE CONTRACTOR SHALL USE CARE NEAR ANY AND ALL EXISTING ITEMS THAT WILL NOT BE REMOVED. ANY DAMAGE DONE TO EXISTING ITEMS BY THE CONTRACTOR SHALL BE REPAIRED OR REPLACED TO THE SATISFACTION OF THE ENGINEER AT THE CONTRACTOR'S EXPENSE.

DO NOT SCALE PLANS FOR CONSTRUCTION DIMENSIONS.

BEFORE ORDERING PIPE CULVERTS OR PIPE DRAINS, THE CONTRACTOR SHALL CONSULT THE ENGINEER FOR EXACT LENGTHS.

SEEDING WILL NOT BE PERMITTED AT ANY TIME WHEN THE GROUND IS FROZEN, WET, OR IN AN UNTILLABLE CONDITION. LOCATIONS TO BE SEEDED WILL BE DETERMINED BY THE ENGINEER.

ONLY THOSE TREES DESIGNATED BY THE ENGINEER OR LISTED IN THE TREE REMOVAL SCHEDULE SHALL BE REMOVED. THE CONTRACTOR SHALL PROTECT ALL REMAINING TREES FROM DAMAGE DUE TO HIS OPERATIONS.

THE FINISHED EARTHWORK SHALL HAVE A VEGETATION SUSTAINING SOIL COVERING THE TOP FOUR INCHES (100 MM) IN AREAS TO BE SEEDED OR SODDED. THE VEGETATION SUSTAINING SOIL REQUIRED SHALL BE INCLUDED IN THE COST OF TOPSOIL FURNISH AND PLACE, 4".

ALL ELEVATIONS REFERRING TO U.S.G.S. MEAN SEA LEVEL DATUM.

DURING CONSTRUCTION OPERATIONS, IF ANY LOOSE MATERIAL IS DEPOSITED IN THE FLOW LINE OF DRAINAGE STRUCTURES SUCH THAT THE NATURAL FLOW OF WATER IS OBSTRUCTED, THE MATERIAL SHALL BE REMOVED AT THE CLOSE OF EACH WORKDAY. AT THE CONCLUSION OF CONSTRUCTION OPERATIONS, ALL UTILITY STRUCTURES SHALL BE FREE FROM DUST AND DEBRIS. THE WORK SPECIFIED ABOVE WILL NOT BE PAID FOR SEPARATELY BUT SHALL BE INCLUDED IN THE COST OF THE CONTRACT.

ABANDONED UNDERGROUND UTILITIES THAT CONFLICT WITH CONSTRUCTION SHALL BE DISPOSED OF OUTSIDE THE LIMITS OF THE RIGHT OF WAY ACCORDING TO ARTICLE 202.03 OF THE STANDARD SPECIFICATIONS AND AS DIRECTED BY THE ENGINEER. THIS WORK WILL NOT BE PAID FOR SEPARATELY, BUT WILL BE INCLUDED IN THE COST OF EARTH EXCAVATION.

ANY REFERENCE TO A STANDARD IN THESE PLANS SHALL BE INTERPRETED TO MEAN THE EDITION AS INDICATED BY THE SUBNUMBER SHOWN IN THE LIST OF STANDARDS OR THE COPY INCLUDED IN THESE PLANS.

ALL DAMAGE TO DEPARTMENT OWNED UNDERGROUND FACILITIES, CAUSED BY THE CONTRACTOR SHALL BE REPAIRED TO THE SATISFACTION OF THE DEPARTMENT AT THE CONTRACTOR'S EXPENSE. THIS SHALL INCLUDE ALL TEMPORARY REPAIRS REQUIRED TO KEEP THE FACILITY OPERATIONAL WHILE MATERIAL IS BEING OBTAINED TO MAKE PERMANENT REPAIRS. SPLICING OF ELECTRIC CABLE WILL NOT BE ALLOWED. ELECTRIC CABLE SHALL BE REPLACED FROM POLE TO POLE OR CONTROLLER.

THE CONTRACTOR SHALL CONTACT J.U.L.I.E. AT LEAST 48 HOURS PRIOR TO EXCAVATION TO DETERMINE WHICH UTILITIES ARE IN THE AREA. KNOWN J.U.L.I.E. MEMBERS IN THE AREA INCLUDE AT&T, COMED, MEDIACOM, ONEOK, AND VISTRA KENDALL ENERGY. KNOWN NON-J.U.L.I.E. MEMBERS IN THE AREA INCLUDE IDOT & THE VILLAGE OF MINOOKA.

BEFORE BEGINNING ANY WORK, THE CONTRACTOR SHALL RETAIN AND RECORD FOR FUTURE REFERENCE, ALL EXISTING PAVEMENT MARKINGS (AND RAISED REFLECTIVE PAVEMENT MARKERS) THAT CONFLICT WITH HIGHWAY STANDARDS 701400 AND 701401, IN ORDER THAT THESE LOCATIONS CAN BE RE-ESTABLISHED FOR PROPOSED STRIPING AT THE COMPLETION OF THIS CONTRACT. EXACT LOCATIONS OF ALL PROPOSED PAVEMENT MARKINGS SHALL BE DIRECTED BY THE RESIDENT ENGINEER.

IT SHALL BE THE CONTRACTORS RESPONSIBILITY TO VERIFY ALL DIMENSIONS AND CONDITIONS EXISTING IN THE FIELD PRIOR TO CONSTRUCTION AND ORDERING MATERIALS.

GENERAL NOTES CONT.

ALL DAMAGE TO EXISTING PAVEMENT MARKINGS OR RAISED REFLECTIVE PAVEMENT MARKERS OUTSIDE THE REMOVAL LINE SHOWN ON THE PLANS SHALL BE REPLACED AT NO ADDITIONAL COST TO THE DEPARTMENT.

THE CONTRACTOR SHALL MAINTAIN ALL ROADWAYS OPEN TO TRAFFIC AS SHOWN ON THE MAINTENANCE OF TRAFFIC PLANS.

EXCEPT AS NOTED ON THE PLANS, PAVEMENT GRADES SHOWN ARE AT THE TOP OF PAVEMENT SURFACES.

COMMITMENTS

TREES OVER 3 INCH DIAMETER AT BREAST HEIGHT SHALL NOT BE CLEARED FROM APRIL 1ST TO SEPTEMBER 30TH.

THE FOLLOWING RATES OF APPLICATION HAVE BEEN USED IN CALCULATING PLAN QUANTITIES:

NITROGEN	90 LBS/ACRE
PHOSPHORUS	90 LBS/ACRE
POTASSIUM	90 LBS/ACRE
SHORT TERM PAVEMENT MARKING	10 FT/100 FT OF APPLICATION
GRANULAR MATERIALS	2.05 TONS/CU YD
HMA RESURFACING	112 LBS/SQ YD/IN

STATE OF ILLINOIS
DEPARTMENT OF TRANSPORTATION
DISTRICT THREE
AS BUILT INFORMATION

SUPERVISING CONSTRUCTION FIELD ENGINEER

RESIDENT ENGINEER / TECHNICIAN

START & END DATES OF CONSTRUCTION:

INSPECTORS:

STATE OF ILLINOIS
DEPARTMENT OF TRANSPORTATION
DISTRICT THREE

PREPARED BY:

DISTRICT STUDIES & PLANS ENGINEER

DATE:

EXAMINED BY:

DISTRICT CONSTRUCTION ENGINEER

DISTRICT MATERIALS ENGINEER

DISTRICT OPERATIONS ENGINEER

CODE NO.	ITEM	UNIT	TOTAL QUANTITY	CONSTRUCTION CODE		
				90% FED 10% STATE	90% FED 10% STATE	90% FED 10% STATE
				ROADWAY	BRIDGE	BRIDGE
				0004	0010	0047
				URBAN	SN 032-9906	SN 032-0065
20100500	TREE REMOVAL, ACRES	ACRE	2.25	2.25		
20200100	EARTH EXCAVATION	CU YD	2,730	2,730		
21001000	GEOTECHNICAL FABRIC FOR GROUND STABILIZATION	SQ YD	1,843	1,843		
21101615	TOPSOIL FURNISH AND PLACE, 4"	SQ YD	5,913	5,913		
21400100	GRADING AND SHAPING DITCHES	FOOT	1,495	1,495		
25000210	SEEDING, CLASS 2A	ACRE	1.50	1.50		
25000400	NITROGEN FERTILIZER NUTRIENT	POUND	130	130		
25000500	PHOSPHORUS FERTILIZER NUTRIENT	POUND	130	130		
25000600	POTASSIUM FERTILIZER NUTRIENT	POUND	130	130		
25100115	MULCH, METHOD 2	ACRE	0.50	0.50		
25100630	EROSION CONTROL BLANKET	SQ YD	3,342	3,342		
25100635	HEAVY DUTY EROSION CONTROL BLANKET	SQ YD	1,175	1,175		
28000250	TEMPORARY EROSION CONTROL SEEDING	POUND	158	158		
28000305	TEMPORARY DITCH CHECKS	FOOT	141	141		

* SPECIALTY ITEM

CODE NO.	ITEM	UNIT	TOTAL QUANTITY	CONSTRUCTION CODE		
				90% FED 10% STATE	90% FED 10% STATE	90% FED 10% STATE
				ROADWAY	BRIDGE	BRIDGE
				0004	0010	0047
				URBAN	SN 032-9906	SN 032-0065
28000400	PERIMETER EROSION BARRIER	FOOT	1,497	1,497		
28000500	INLET AND PIPE PROTECTION	EACH	11	11		
28001100	TEMPORARY EROSION CONTROL BLANKET	SQ YD	2,285	2,285		
28100105	STONE RIPRAP, CLASS A3	SQ YD	12	12		
28200200	FILTER FABRIC	SQ YD	12	12		
30300112	AGGREGATE SUBGRADE IMPROVEMENT 12"	SQ YD	3,657	3,657		
31200500	STABILIZED SUBBASE - HOT-MIX ASPHALT, 4"	SQ YD	1,742	1,742		
40600982	HOT-MIX ASPHALT SURFACE REMOVAL - BUTT JOINT	SQ YD	144	144		
40604060	HOT-MIX ASPHALT SURFACE COURSE, IL-9.5, MIX "D", N50	TON	13	13		
42100380	CONTINUOUSLY REINFORCED PORTLAND CEMENT CONCRETE PAVEMENT 14"	SQ YD	1,742	1,742		
44000100	PAVEMENT REMOVAL	SQ YD	1,013	1,013		
44001980	CONCRETE BARRIER REMOVAL	FOOT	59	59		
48102100	AGGREGATE WEDGE SHOULDER, TYPE B	TON	96	96		
50100100	REMOVAL OF EXISTING STRUCTURES	EACH	1		1	

* SPECIALTY ITEM

CODE NO.	ITEM	UNIT	TOTAL QUANTITY	CONSTRUCTION CODE		
				90% FED 10% STATE	90% FED 10% STATE	90% FED 10% STATE
				ROADWAY	BRIDGE	BRIDGE
				0004	0010	0047
				URBAN	SN 032-9906	SN 032-0065
50102400	CONCRETE REMOVAL	CU YD	10.2			10.2
50157300	PROTECTIVE SHIELD	SQ YD	360			360
50200100	STRUCTURE EXCAVATION	CU YD	2,128		2,128	
50300225	CONCRETE STRUCTURES	CU YD	673.1		663.2	9.9
50300255	CONCRETE SUPERSTRUCTURE	CU YD	11.8			11.8
50300260	BRIDGE DECK GROOVING	SQ YD	482			482
50300300	PROTECTIVE COAT	SQ YD	695			695
50500105	FURNISHING AND ERECTING STRUCTURAL STEEL	L SUM	1		1	
50606701	CLEANING AND PAINTING STRUCTURAL STEEL , LOCATION 1	L SUM	1			1
50800205	REINFORCEMENT BARS, EPOXY COATED	POUND	87,650		85,770	1,880
50900207	STEEL RAILING, TYPE CO-10	FOOT	402			402
51100100	SLOPE WALL 4 INCH	SQ YD	177		177	
51201710	FURNISHING STEEL PILES HP12X84	FOOT	8,196		8,196	
51202305	DRIVING PILES	FOOT	8,196		8,196	

* SPECIALTY ITEM

CODE NO.	ITEM	UNIT	TOTAL QUANTITY	CONSTRUCTION CODE		
				90% FED 10% STATE	90% FED 10% STATE	90% FED 10% STATE
				ROADWAY	BRIDGE	BRIDGE
				0004	0010	0047
				URBAN	SN 032-9906	SN 032-0065
51203710	TEST PILE STEEL HP12X84	EACH	3		3	
51204650	PILE SHOES	EACH	219		219	
51500100	NAME PLATES	EACH	1		1	
52000110	PREFORMED JOINT STRIP SEAL	FOOT	116			116
52100400	STEEL BEARING ASSEMBLY	EACH	8		8	
52100530	ANCHOR BOLTS, 1 1/4"	EACH	40		40	
52200020	TEMPORARY SOIL RETENTION SYSTEM	SQ FT	5,309		5,309	
58600101	GRANULAR BACKFILL FOR STRUCTURES	CU YD	264.0		264.0	
58700300	CONCRETE SEALER	SQ FT	3,451		1,939	1,512
59100100	GEOCOMPOSITE WALL DRAIN	SQ YD	262		262	
60108501	PIPE UNDERDRAINS, TYPE 3	FOOT	908	908		
60146304	PIPE UNDERDRAINS FOR STRUCTURES 4"	FOOT	200		200	
* 63000001	STEEL PLATE BEAM GUARDRAIL, TYPE A, 6 FOOT POSTS	FOOT	900	900		
* 63000003	STEEL PLATE BEAM GUARDRAIL, TYPE A, 9 FOOT POSTS	FOOT	600	600		

* SPECIALTY ITEM

	CODE NO.	ITEM	UNIT	TOTAL QUANTITY	CONSTRUCTION CODE		
					90% FED 10% STATE	90% FED 10% STATE	90% FED 10% STATE
					ROADWAY	BRIDGE	BRIDGE
					0004	0010	0047
					URBAN	SN 032-9906	SN 032-0065
*	63100045	TRAFFIC BARRIER TERMINAL, TYPE 2	EACH	1	1		
*	63100089	TRAFFIC BARRIER TERMINAL, TYPE 6B	EACH	1	1		
*	63100119	TRAFFIC BARRIER TERMINAL, TYPE 14	EACH	4	4		
*	63100167	TRAFFIC BARRIER TERMINAL, TYPE 1 (SPECIAL) TANGENT	EACH	6	6		
	63200310	GUARDRAIL REMOVAL	FOOT	1,767	1,767		
	63700805	CONCRETE BARRIER TRANSITION	FOOT	59	59		
	63700900	CONCRETE BARRIER BASE	FOOT	59	59		
	67000400	ENGINEER'S FIELD OFFICE, TYPE A	CAL MO	18	18		
	67100100	MOBILIZATION	L SUM	1	1		
	70103815	TRAFFIC CONTROL SURVEILLANCE	CAL DA	120	120		
	70107025	CHANGEABLE MESSAGE SIGN	CAL DA	30	30		
	70300100	SHORT TERM PAVEMENT MARKING	FOOT	3,423	3,423		
	70300150	SHORT TERM PAVEMENT MARKING REMOVAL	SQ FT	1,141	1,141		
	70307120	TEMPORARY PAVEMENT MARKING - LINE 4" - TYPE IV TAPE	FOOT	22,379	22,379		

* SPECIALTY ITEM

	CODE NO.	ITEM	UNIT	TOTAL QUANTITY	CONSTRUCTION CODE		
					90% FED 10% STATE	90% FED 10% STATE	90% FED 10% STATE
					ROADWAY	BRIDGE	BRIDGE
					0004	0010	0047
					URBAN	SN 032-9906	SN 032-0065
	70307125	TEMPORARY PAVEMENT MARKING - LINE 5" - TYPE IV TAPE	FOOT	3,866	3,866		
	70307130	TEMPORARY PAVEMENT MARKING - LINE 6" - TYPE IV TAPE	FOOT	3,474	3,474		
	70307140	TEMPORARY PAVEMENT MARKING - LINE 8" - TYPE IV TAPE	FOOT	3,970	3,970		
	70307160	TEMPORARY PAVEMENT MARKING - LINE 12" - TYPE IV TAPE	FOOT	540	540		
	70400100	TEMPORARY CONCRETE BARRIER	FOOT	1,912.5	1,912.5		
	70400125	PINNING TEMPORARY CONCRETE BARRIER	EACH	720	720		
	70400200	RELOCATE TEMPORARY CONCRETE BARRIER	FOOT	2,250.0	2,250.0		
	70600260	IMPACT ATTENUATORS, TEMPORARY (FULLY REDIRECTIVE, NARROW), TEST LEVEL 3	EACH	2	2		
	70600332	IMPACT ATTENUATORS, RELOCATE (FULLY REDIRECTIVE, NARROW), TEST LEVEL 3	EACH	6	6		
*	72501000	TERMINAL MARKER - DIRECT APPLIED	EACH	8	8		
*	78000200	THERMOPLASTIC PAVEMENT MARKING - LINE 4"	FOOT	241	241		
*	78004645	PREFORMED PLASTIC PAVEMENT MARKING, TYPE D - LINE 9"	FOOT	780	780		
*	78004655	PREFORMED PLASTIC PAVEMENT MARKING, TYPE D - LINE 11"	FOOT	1,205	1,205		
*	78005110	EPOXY PAVEMENT MARKING - LINE 4"	FOOT	7,386	7,386		

* SPECIALTY ITEM

	CODE NO.	ITEM	UNIT	TOTAL QUANTITY	CONSTRUCTION CODE		
					90% FED 10% STATE	90% FED 10% STATE	90% FED 10% STATE
					ROADWAY	BRIDGE	BRIDGE
					0004	0010	0047
					URBAN	SN 032-9906	SN 032-0065
*	78005150	EPOXY PAVEMENT MARKING - LINE 12"	FOOT	87	87		
*	78009004	MODIFIED URETHANE PAVEMENT MARKING - LINE 4"	FOOT	804	804		
*	78011025	GROOVING FOR RECESSED PAVEMENT MARKING 5"	FOOT	6,573	6,573		
*	78011050	GROOVING FOR RECESSED PAVEMENT MARKING 10"	FOOT	780	780		
*	78011060	GROOVING FOR RECESSED PAVEMENT MARKING 12"	FOOT	1,205	1,205		
*	78100100	RAISED REFLECTIVE PAVEMENT MARKER	EACH	14	14		
*	78100300	REPLACEMENT REFLECTOR	EACH	128	128		
	78300202	PAVEMENT MARKING REMOVAL - WATER BLASTING	SQ FT	4,991	4,991		
	X0322061	TEMPORARY JUMP SPAN	L SUM	1		1	
	X2020410	EARTH EXCAVATION (SPECIAL)	CU YD	405	405		
	X2080250	TRENCH BACKFILL, SPECIAL	CU YD	420	420		
	X5012610	CONCRETE HEADWALL REMOVAL PARTIAL	EACH	1	1		
	X5030530	FLOOR DRAIN EXTENSION	EACH	8			8
	X5091765	PIPE HANDRAIL, SPECIAL	FOOT	213		213	

* SPECIALTY ITEM

	CODE NO.	ITEM	UNIT	TOTAL QUANTITY	CONSTRUCTION CODE		
					90% FED 10% STATE	90% FED 10% STATE	90% FED 10% STATE
					ROADWAY	BRIDGE	BRIDGE
					0004	0010	0047
					URBAN	SN 032-9906	SN 032-0065
	52318802	DRAINAGE SYSTEM FOR STRUCTURES	L SUM	1		1	
	X5800110	MEMBRANE WATERPROOFING (SPECIAL)	SQ FT	4,235		4,235	
	X6010001	CONNECTION OF EXISTING PIPE UNDERDRAIN	EACH	1	1		
	X6350204	LINEAR DELINEATOR PANELS, 4 INCH	EACH	36	36		
	X6350206	LINEAR DELINEATOR PANELS, 6 INCH	EACH	4	4		
	X7010118	TEMPORARY RUMBLE STRIPS (SPECIAL)	EACH	56	56		
	X7010216	TRAFFIC CONTROL AND PROTECTION, (SPECIAL)	LSUM	1	1		
	X7010239	CHANGEABLE MESSAGE SIGN, SPECIAL	CAL WK	23	23		
	X7010410	SPEED DISPLAY TRAILER	CAL MO	12	12		
	X7011800	TRAFFIC CONTROL AND PROTECTION, STANDARD BLR 21	LSUM	1	1		
*	X7011858	REAL-TIME TRAFFIC CONTROL SENSOR UNIT	WEEK	23	23		
	X7200202	ALTERNATE ROUTE SIGNING	LSUM	1	1		
	X7830050	RAISED REFLECTIVE PAVEMENT MARKER, REFLECTOR REMOVAL	EACH	128	128		
*	X8570002	SMART TRAFFIC MONITORING SYSTEM	CAL WK	23	23		

* SPECIALTY ITEM

	CODE NO.	ITEM	UNIT	TOTAL QUANTITY	CONSTRUCTION CODE		
					90% FED 10% STATE	90% FED 10% STATE	90% FED 10% STATE
					ROADWAY	BRIDGE	BRIDGE
					0004	0010	0047
					URBAN	SN 032-9906	SN 032-0065
*	X8570004	SMART TRAFFIC MONITORING DEVICE	CAL WK	23	23		
	Z0002300	BALLAST	CU YD	350	350		
	X4062952	HOT-MIX ASPHALT STABILIZATION 6" AT STEEL PLATE BEAM GUARD RAIL	SQ YD	488	488		
	Z0006012	BRIDGE DECK LATEX CONCRETE OVERLAY, 2 1/4 INCHES	SQ YD	510			510
	Z0007101	CONTAINMENT AND DISPOSAL OF LEAD PAINT CLEANING RESIDUES NO. 1	L SUM	1			1
	Z0010400	CLEANING BRIDGE SEATS	SQ FT	472			472
	Z0012130	BRIDGE DECK SCARIFICATION 3/4"	SQ YD	510			510
	Z0012754	STRUCTURAL REPAIR OF CONCRETE (DEPTH EQUAL TO OR LESS THAN 5 INCHES)	SQ FT	71			71
	Z0013798	CONSTRUCTION LAYOUT	L SUM	1	1		
	Z0016001	DECK SLAB REPAIR (FULL DEPTH, TYPE I)	SQ YD	10			10
	Z0041895	POLYMER CONCRETE	CU FT	2.4			2.4
	Z0048665	RAILROAD PROTECTIVE LIABILITY INSURANCE	L SUM	1	1		
	Z0062456	TEMPORARY PAVEMENT	SQ YD	178	178		
	Z0069700	SUB-BALLAST	CU YD	635	635		

* SPECIALTY ITEM

	CODE NO.	ITEM	UNIT	TOTAL QUANTITY	CONSTRUCTION CODE		
					90% FED 10% STATE	90% FED 10% STATE	90% FED 10% STATE
					ROADWAY	BRIDGE	BRIDGE
					0004	0010	0047
					URBAN	SN 032-9906	SN 032-0065
	X0328038	BRIDGE ROLL-IN	L SUM	1		1	
	X5010210	TEMPORARY SUBSTRUCTURES	L SUM	1		1	
*	X0325602	ASBESTOS WATERPROOFING REMOVAL	SQ FT	2,300		2,300	
	X5050002	STEEL GRATE WALKWAY	FOOT	213		213	
Ø	Z0076600	TRAINEES	HOUR	2,000	2,000		
Ø	Z0076604	TRAINEES - TRAINING PROGRAM GRADUATE	HOUR	2,000	2,000		

* SPECIALTY ITEM Ø 0042

LIN ENGINEERING,LTD. Consulting Engineers Westmont, Illinois	USER NAME = 14nho	DESIGNED - JK	REVISED -
		DRAWN - JK	REVISED -
	PLOT SCALE = 2.0000 ' / in.	CHECKED - ST	REVISED -
	PLOT DATE = 1/9/2025	DATE - 1/2025	REVISED -

STATE OF ILLINOIS
DEPARTMENT OF TRANSPORTATION

W.C. RAILROAD OVER F.A.I. ROUTE 80
SUMMARY OF QUANTITIES

SCALE: N.T.S. | SHEET 10 OF 10 SHEETS | STA. TO STA.

F.A.I. RTE.	SECTION	COUNTY	TOTAL SHEETS	SHEET NO.
80	(32, 47-4)VB, HBR-3	GRUNDY/KENDALL	143	12

CONTRACT NO. 66295

ILLINOIS | FED. AID PROJECT

REV. 6/12/25 REV. 3/26/25 REV. 3/19/25 REV. 3/5/25

TREE REMOVAL, ACRES

FROM STATION	TO STATION	LT/RT	ACRE
1730+75.68	1731+73.11	RT	0.07
1730+97.18	1731+40.54	LT	0.06
1731+80.55	1732+50.00	LT	0.05
45+46.47	49+16.70	LT	0.17
51+70.34	52+56.27	LT	0.02
TOTAL FROM SINKHOLE REPAIRS			1.75
ROUNDED TOTAL			2.25

AGGREGATE SUBGRADE IMPROVEMENT 12"

FROM STATION	TO STATION	LT/RT	AREA (SQ YD)
1728+98.47	1734+32.62	RT	981.33
1730+57.29	1731+44.16	RT	132.53
1730+57.29	1731+44.16	LT	133.40
1731+02.18	1734+75.64	LT	595.28
44+99.00	48+39.00	LT/RT	907.00
51+13.00	54+53.00	LT/RT	907.00
ROUNDED TOTAL			3,657

GEOTECHNICAL FABRIC FOR GROUND STABILIZATION

FROM STATION	TO STATION	LT/RT	AREA (SQ YD)
1728+98.47	1734+32.62	RT	981.33
1730+57.29	1731+44.16	RT	132.53
1730+57.29	1731+44.16	LT	133.40
1731+02.18	1734+75.64	LT	595.28
ROUNDED TOTAL			1,843

HOT-MIX ASPHALT SURFACE REMOVAL - BUTT JOINT

FROM STATION	TO STATION	LT/RT	AREA (SQ YD)
613+69.62	613+99.62	LT/RT	68.34
616+00.37	616+30.37	LT/RT	75.06
ROUNDED TOTAL			144

HOT- MIX ASPHALT SURFACE COURSE, IL-9.5, MIX "D", N50

FROM STATION	TO STATION	LT/RT	TON
613+69.62	613+99.62	LT/RT	5.74
616+00.37	616+30.37	LT/RT	6.31
ROUNDED TOTAL			13

PAVEMENT REMOVAL

FROM STATION	TO STATION	LT/RT	AREA (SQ YD)
1727+89.68	1735+84.37	RT	482.84
1730+57.29	1731+44.16	RT	131.71
1730+57.29	1731+44.16	LT	134.50
1731+02.18	1733+70.92	LT	263.30
ROUNDED TOTAL			1,013

STABILIZED SUBBASE - HOT-MIX ASPHALT, 4"

FROM STATION	TO STATION	LT/RT	AREA (SQ YD)
1728+98.47	1734+32.62	RT	921.95
1730+57.29	1731+44.16	RT	132.53
1730+57.29	1731+44.16	LT	133.40
1731+02.18	1734+75.64	LT	553.79
ROUNDED TOTAL			1,742

AGGREGATE WEDGE SHOULDER, TYPE B

FROM STATION	TO STATION	LT/RT	TON
611+47.67	613+89.63	RT	22.85
611+68.50	613+90.29	LT	23.27
611+09.83	618+65.12	RT	22.46
611+10.39	618+79.50	LT	26.64
ROUNDED TOTAL			96

STEEL PLATE BEAM GUARDRAIL, TYPE A, 6 FOOT POSTS

FROM STATION	TO STATION	LT/RT	FOOT
1728+11.76	1735+48.00	RT	687.50
1731+90.00	1734+53.64	LT	212.50
ROUNDED TOTAL			900.0

STEEL PLATE BEAM GUARDRAIL, TYPE A, 9 FOOT POSTS

FROM STATION	TO STATION	LT/RT	FOOT
612+12.96	613+62.96	RT	150.00
612+38.59	613+63.59	LT	125.00
616+36.45	617+98.95	RT	150.00
616+37.00	618+11.99	LT	175.00
ROUNDED TOTAL			600.0

TRAFFIC BARRIER TERMINAL, TYPE 2

FROM STATION	TO STATION	LT/RT	EACH
1731+77.73	1731+90.00	LT	1
TOTAL			1

TRAFFIC BARRIER TERMINAL, TYPE 6B

FROM STATION	TO STATION	LT/RT	EACH
1735+48.00	1735+98.40	RT	1
TOTAL			1

TRAFFIC BARRIER TERMINAL, TYPE 14

FROM STATION	TO STATION	LT/RT	EACH
613+62.96	614+03.06	RT	1
613+63.59	614+03.69	LT	1
615+96.35	616+36.45	RT	1
615+96.90	616+37.00	LT	1
TOTAL			4

TRAFFIC BARRIER TERMINAL, TYPE 1 (SPECIAL) TANGENT

FROM STATION	TO STATION	LT/RT	EACH
1728+11.76	1728+61.74	RT	1
1734+02.73	1734+52.71	LT	1
611+87.95	612+12.96	RT	1
612+13.58	612+38.59	LT	1
617+98.95	618+23.97	RT	1
618+11.99	618+36.98	LT	1
TOTAL			6

GUARDRAIL REMOVAL

FROM STATION	TO STATION	LT/RT	FOOT
1728+27.00	1730+68.00	RT	241.78
1731+00.00	1735+84.37	RT	484.69
1731+67.00	1733+45.00	LT	177.93
612+16.46	614+25.20	RT	211.90
612+37.88	614+25.82	LT	188.00
615+73.94	617+99.67	RT	225.80
615+74.76	618+11.33	LT	236.60
ROUNDED TOTAL			1,767

CONCRETE BARRIER TRANSITION

FROM STATION	TO STATION	LT/RT	FOOT
1730+57.29	1731+03.33	LT/RT	46.03
1731+31.33	1731+44.16	LT/RT	12.84
ROUNDED TOTAL			59

CONCRETE BARRIER REMOVAL

FROM STATION	TO STATION	LT/RT	FOOT
1730+57.29	1731+03.33	LT/RT	46.03
1731+31.33	1731+44.16	LT/RT	12.84
ROUNDED TOTAL			59

PIPE UNDERDRAINS, TYPE 3

FROM STATION	TO STATION	LT/RT	FOOT
1728+98.47	1734+32.62	RT	534.15
1731+02.18	1734+75.64	LT	373.46
ROUNDED TOTAL			908

TOPSOIL FURNISH AND PLACE 4"

FROM STATION	TO STATION	LT/RT	AREA (SQ YD)
1727+89.68	1730+57.67	RT	720.86
1730+37.37	1735+83.40	RT	1,162.76
1730+97.18	1731+94.20	LT	407.43
1731+70.48	1734+85.64	LT	472.19
45+50.09	48+57.44	LT	929.55
45+50.09	46+75.00	RT	44.43
51+14.03	54+50.00	LT	81.45
51+57.42	51+98.86	RT	19.89
53+51.51	54+50.00	RT	36.21
TOTAL FROM SINKHOLE REPAIRS			2,038.00
ROUNDED TOTAL			5,913

CONCRETE BARRIER BASE

FROM STATION	TO STATION	LT/RT	FOOT
1730+57.29	1731+03.33	LT/RT	46.03
1731+31.33	1731+44.16	LT/RT	12.84
ROUNDED TOTAL			59

CONTINUOUSLY REINFORCED PORTLAND CEMENT CONCRETE PAVEMENT 14"

FROM STATION	TO STATION	LT/RT	AREA (SQ YD)
1728+98.47	1734+32.62	RT	921.95
1730+57.29	1731+44.16	RT	132.53
1730+57.29	1731+44.16	LT	133.40
1731+02.18	1734+75.64	LT	553.79
ROUNDED TOTAL			1,742

TEMPORARY PAVEMENT MARKING - LINE 4" - TYPE IV TAPE

FROM STATION	TO STATION	LT/RT	FOOT
STAGE 1			
1722+89.79	1735+34.27	RT	1,244.63
1722+89.79	1735+34.27	RT	1,244.59
1726+29.17	1736+09.26	LT	980.63
1726+29.17	1736+09.26	LT	980.22
STAGE 2			
1722+89.79	1739+98.12	RT	1,708.49
1722+89.79	1739+98.12	RT	1,708.45
1726+71.20	1740+73.05	LT	1,402.03
1726+71.20	1740+73.05	LT	1,401.96
STAGE 3			
1723+54.91	1742+31.23	RT	1,876.94
1723+54.91	1742+31.23	RT	1,876.35
1724+99.39	1742+50.73	LT	1,752.08
1724+99.39	1742+50.73	LT	1,751.28
STAGE 4			
1722+89.79	1735+34.27	RT	1,244.63
1722+89.79	1735+34.27	RT	1,244.59
1726+29.17	1736+09.26	LT	980.63
1726+29.17	1736+09.26	LT	980.63
ROUNDED TOTAL			22,379

TEMPORARY PAVEMENT MARKING - LINE 5" - TYPE IV TAPE

FROM STATION	TO STATION	LT/RT	FOOT
STAGE 1			
1722+89.79	1735+34.27	RT	311.15
1726+67.78	1735+34.27	RT	216.63
1726+29.17	1736+09.26	LT	245.00
STAGE 2			
1722+89.79	1739+98.12	RT	424.44
1726+67.79	1739+98.12	RT	332.57
1726+71.20	1740+73.05	LT	345.91
STAGE 3			
1723+54.91	1742+31.23	RT	462.20
1729+57.67	1742+31.23	RT	318.41
1724+99.39	1742+50.73	LT	436.01
STAGE 4			
1722+89.79	1735+34.27	RT	311.15
1726+67.78	1735+34.27	RT	216.63
1726+29.17	1736+09.26	LT	245.00
ROUNDED TOTAL			3,866

TEMPORARY PAVEMENT MARKING - LINE 6" - TYPE IV TAPE

FROM STATION	TO STATION	LT/RT	FOOT
STAGE 1			
1726+29.17	1732+80.77	LT	702.69
1732+80.77	1736+09.26	LT	82.13
STAGE 2			
1726+71.20	1732+80.84	LT	618.45
1732+80.84	1740+73.05	LT	198.08
STAGE 3			
1727+46.73	1736+95.79	LT	949.06
1736+95.79	1742+50.73	LT	138.76
STAGE 4			
1726+29.17	1732+80.77	LT	702.69
1732+80.77	1736+09.26	LT	82.13
ROUNDED TOTAL			3,474

TEMPORARY PAVEMENT MARKING - LINE 8" - TYPE IV TAPE

FROM STATION	TO STATION	LT/RT	FOOT
STAGE 1			
1722+89.79	1726+67.78	RT	756.08
STAGE 2			
1722+89.79	1726+67.78	RT	756.08
STAGE 3			
1723+54.91	1729+57.67	RT	1,205.96
1724+99.39	1727+46.73	LT	495.08
STAGE 4			
1722+89.79	1726+67.78	RT	756.08
ROUNDED TOTAL			3,970

TEMPORARY PAVEMENT MARKING - LINE 12" - TYPE IV TAPE

FROM STATION	TO STATION	LT/RT	FOOT
STAGE 1			
1722+89.79	1726+67.78	RT	123.93
STAGE 2			
1722+89.79	1726+67.78	RT	103.94
STAGE 3			
1723+54.91	1729+57.67	RT	134.41
1724+99.39	1727+46.73	LT	53.68
STAGE 4			
1722+89.79	1726+67.78	RT	123.93
ROUNDED TOTAL			540

EARTHWORK SCHEDULE

EARTH EXCAVATION	STRUCTURE EXCAVATION	STRUCTURE EXCAVATION FOR TEMP JUMP SPAN *	EARTH EXC. ADJ. FOR SHRINKAGE (25%)	EMBANKMENT	EARTHWORK BALANCE WASTE(+) OR SHORTAGE(-)
CU YD	CU YD	CU YD	CU YD	CU YD	CU YD
STAGE 1					
300		265	425	49	+376
STAGE 2					
	118		90		+90
STAGE 3					
2,095	2,010		3,080	100	+2,980
STAGE 4					
335		265	450	130	+320
TOTAL					
2,730	2,128	530	4,045	279	+3,766

* THE QUANTITY FOR STRUCTURE EXCAVATION FOR TEMPORARY JUMP SPAN IS INCIDENTAL TO TEMPORARY JUMP SPAN AND WILL NOT BE PAID FOR SEPERATELY.

TEMPORARY CONCRETE BARRIER

FROM STATION	TO STATION	LT/RT	FOOT
STAGE 1			
1729+18.87	1731+56.14	RT	237.5
1730+07.30	1732+44.57	LT	237.5
STAGE 2			
1729+69.36	1736+20.00	RT	412.5
1730+49.33	1736+99.97	LT	412.5
STAGE 3			
1727+08.82	1738+99.01	RT	537.5
1730+52.21	1737+74.09	LT	75.0
ROUNDED TOTAL			1,912.5

RELOCATE TEMPORARY CONCRETE BARRIER

FROM STATION	TO STATION	LT/RT	FOOT
STAGE 2			
1729+69.36	1736+20.00	RT	237.5
1730+49.33	1736+99.97	LT	237.5
STAGE 3			
1727+08.82	1738+99.01	RT	650.0
1730+52.21	1737+74.09	LT	650.0
STAGE 4			
1729+18.87	1731+56.14	RT	237.5
1730+07.30	1732+44.57	LT	237.5
ROUNDED TOTAL			2,250.0

PINNING TEMPORARY CONCRETE BARRIER

FROM STATION	TO STATION	LT/RT	EACH
STAGE 1			
1729+68.79	1731+06.15	RT	76
1730+57.29	1731+94.57	LT	76
STAGE 2			
1729+69.36	1736+20.00	RT	208
1730+49.33	1736+99.97	LT	208
STAGE 4			
1729+68.79	1731+06.15	RT	76
1730+57.29	1731+94.57	LT	76
TOTAL			720

IMPACT ATTENUATORS,RELOCATE (FULLY REDIRECTIVE,NARROW),TEST LEVEL 3

FROM STATION	LT/RT	EACH
STAGE 2		
1729+69.28	RT	1
1736+99.97	LT	1
STAGE 3		
1727+08.09	RT	1
1737+74.06	LT	1
STAGE 4		
1729+18.79	RT	1
1732+44.65	LT	1
TOTAL		6

EARTH EXCAVATION (SPECIAL)

FROM STATION	TO STATION	LT/RT	AREA (CU YD)
1736+34.50	1736+65.50	LT	405.0
ROUNDED TOTAL			405

TRENCH BACKFILL, SPECIAL

FROM STATION	TO STATION	LT/RT	AREA (CU YD)
1736+34.50	1736+65.50	LT	420.0
ROUNDED TOTAL			420

CONCRETE HEADWALL REMOVAL PARTIAL

FROM STATION	LT/RT	EACH
1733+80.50	LT	1
TOTAL		1

CONNECTION OF EXISTING PIPE UNDERDRAIN

FROM STATION	LT/RT	EACH
1746+63.00	LT	1
TOTAL		1

IMPACT ATTENUATORS,TEMPORARY (FULLY REDIRECTIVE,NARROW),TEST LEVEL 3

FROM STATION	LT/RT	EACH
STAGE 1		
1729+18.79	RT	1
1732+44.65	LT	1
TOTAL		2

TERMINAL MARKERS - DIRECT APPLIED

FROM STATION	LT/RT	EACH
1728+11.76	RT	1
1731+77.73	LT	1
1734+53.64	LT	1
1735+98.40	RT	1
611+87.95	RT	1
612+13.58	LT	1
617+98.95	RT	1
618+11.99	LT	1
TOTAL		8

PAVEMENT MARKING SCHEDULE

FROM STATION	TO STATION	LT/RT	THERMOPLASTIC PAVEMENT MARKING - LINE 4"	PREFORMED PLASTIC PAVEMENT MARKING, TY D		EPOXY PAVEMENT MARKING		MODIFIED URETHANE PAVEMENT MARKING LINE 4"	REPLACEMENT REFLECTOR	RAISED REFLECTIVE PAVEMENT MARKER, REFLECTOR REMOVAL	RAISED REFLECTIVE PAVEMENT MARKER	GROOVING FOR RECESSED PAVEMENT MARKING		
				LINE 9"	LINE 11"	LINE 4"	LINE 12"					5"	10"	12"
			FOOT	FOOT	FOOT	FOOT	FOOT	FOOT	EACH	EACH	EACH	FOOT	FOOT	FOOT
1722+89.79	1728+63.47	RT			1147.50		70.82							1,147.50
1722+89.79	1742+31.23	RT		437.84		3,882.88			44	44		1,941.44	437.84	
1724.99.39	1727+38.51	LT					15.20							
1724+99.39	1732+80.00	LT			962.28									962.28
1724+99.39	1742+50.73	LT		485.36		3,502.68			49	49		3,263.56	485.36	
1728+63.47	1742+31.23	RT		341.94					35	35		1,367.76	341.94	
1732+80.00	1742+50.73	LT			242.49									242.49
613+69.62	613+99.85	LT/RT	119.99											
613+69.62	616+30.38	LT/RT									14			
613+99.85	616+00.37	LT/RT						803.01						
616+00.37	619+30.38	LT/RT	120.02											
ROUNDED TOTAL			241	780	1,205	7,386	87	804	128	128	14	6,573	780	1,205

LINEAR DELINEATOR PANELS, 4 INCH

FROM STATION	TO STATION	LT/RT	EACH
1728+11.76	1735+98.40	RT	9
1731+77.73	1734+53.64	LT	3
612+12.96	613+62.96	RT	6
612+38.59	613+63.59	LT	5
616+36.45	617+98.95	RT	6
616+37.00	618+11.99	LT	7
		TOTAL	36

LINEAR DELINEATOR PANELS, 6 INCH

FROM STATION	TO STATION	LT/RT	EACH
1730+57.29	1731+03.33	LT/RT	2
1731+31.33	1731+44.16	LT/RT	2
		TOTAL	4

HOT-MIX ASPHALT STABILIZATION 6" AT STEEL PLATE BEAM GUARDRAIL

FROM STATION	TO STATION	LT/RT	AREA (SQ YD)
1727+89.68	1735+83.40	RT	346.82
1731+02.18	1731+42.88	LT	9.18
1731+77.21	1734+75.64	LT	131.71
		TOTAL	488

TEMPORARY DITCH CHECKS

FROM STATION	LT/RT	FOOT
1728+15.00	RT	8.9
1729+15.00	RT	7.2
1730+15.00	RT	4.9
1732+50.00	LT	5.8
1732+75.00	RT	10.8
1733+75.00	RT	10.8
1734+25.00	LT	6.8
1734+75.00	RT	9.7
TOTAL FROM SINKHOLE REPAIRS		76.0
ROUNDED TOTAL		141

TEMPORARY PAVEMENT

FROM STATION	TO STATION	LT/RT	AREA (SQ YD)
1730+57.29	1731+06.14	RT/LT	177.27
ROUNDED TOTAL			178

PAVEMENT MARKING REMOVAL - WATER BLASTING

FROM STATION	TO STATION	LT/RT	SQ FT
4" REM			
1724+99.39	1742+50.73	LT	583.78
1724+99.39	1742+50.73	LT	583.78
1722+89.79	1742+31.23	RT	647.15
1722+89.79	1742+31.23	RT	647.15
613+69.62	613+99.85	LT	10.07
613+69.62	613+99.85	RT/LT	20.00
613+69.62	613+99.85	RT	9.92
613+99.85	616+00.37	LT	66.92
613+99.85	616+00.37	RT/LT	133.83
613+99.85	616+00.37	RT	66.91
616+00.37	619+30.38	LT	9.92
616+00.37	619+30.38	RT/LT	20.00
616+00.37	619+30.38	RT	10.08
5" REM			
1722+89.79	1742+31.23	RT	182.43
1728+63.47	1742+31.23	RT	142.48
1724+99.39	1742+50.73	LT	202.23
8" REM			
1724+99.39	1732+80.00	LT	641.52
1732+80.00	1742+50.73	LT	161.66
1722+89.79	1728+63.00	RT	765.00
12" REM			
1724+99.39	1732+80.00	LT	15.20
1722+89.79	1728+63.00	RT	70.82
ROUNDED TOTAL			4,991

STONE RIPRAP, CLASS A3

FROM STATION	TO STATION	LT/RT	AREA (SQ YD)
1732+26.00	1732+35.00	LT	6.00
1733+80.50	1733+89.50	LT	6.00
		TOTAL	12

FILTER FABRIC

FROM STATION	TO STATION	LT/RT	AREA (SQ YD)
1732+26.00	1732+35.00	LT	6.00
1733+80.50	1733+89.50	LT	6.00
		TOTAL	12

TEMPORARY EROSION CONTROL SEEDING

FROM STATION	TO STATION	LT/RT	POUND
STAGE 1			
45+00.00	54+60.00	LT/RT	48
TOTAL FROM SINKHOLE REPAIRS			110
		TOTAL	158

TEMPORARY EROSION CONTROL BLANKET

FROM STATION	TO STATION	LT/RT	AREA (SQ YD)
STAGE 1			
45+00.00	54+60.00	LT/RT	2,285.00
		ROUNDED TOTAL	2,285

LANDSCAPING TABLE

FROM STATION	TO STATION	LT/RT	SEEDING, CLASS 2A	NITROGEN FERTILIZER NUTRIENT	POTASSIUM FERTILIZER NUTRIENT	PHOSPHORUS FERTILIZER NUTRIENT	MULCH, METHOD 2	EROSION CONTROL BLANKET	HEAVY DUTY EROSION CONTROL BLANKET	PERIMETER EROSION BARRIER	GRADING AND SHAPING DITCHES
			ACRE	POUND	POUND	POUND	ACRE	SQ YD	SQ YD	FOOT	FOOT
1727+89.68	1729+75.00	RT	0.04	3.94	3.94	3.94	0.04				
1729+75.00	1730+25.00	RT	0.09	7.65	7.65	7.65		411.63			
1730+25.00	1730+57.67	RT	0.02	1.85	1.85	1.85			99.68		
1730+37.37	1730+81.71	RT	0.01	1.03	1.03	1.03	0.01				
1730+67.00	1732+00.00	RT	0.11	9.54	9.54	9.54			513.16		
1730+97.18	1731+50.00	LT	0.07	5.97	5.97	5.97		321.13			
1731+50.00	1731+68.51	LT	0.01	0.82	0.82	0.82			44.29		
1731+54.08	1731+94.20	LT	0.01	0.78	0.78	0.78	0.01				
1731+70.49	1732+75.00	LT	0.06	5.55	5.55	5.55			298.41		
1731+80.42	1732+09.66	LT	0.01	0.49	0.49	0.49	0.01				
1732+00.00	1735+25.00	RT	0.12	10.61	10.61	10.61		570.48			
1732+25.00	1734+85.64	LT	0.04	3.25	3.25	3.25	0.04				
1735+25.00	1735+83.40	RT	0.00	0.45	0.45	0.45	0.00				
45+50.00	45+75.00	RT	0.00	0.19	0.19	0.19	0.00				
45+50.00	48+39.45	LT	0.15	13.43	13.43	13.43					
45+75.00	46+25.00	RT	0.00	0.20	0.20	0.20			10.64		
46+25.00	46+75.00	RT	0.00	0.45	0.45	0.45	0.00				
46+50.00	48+00.00	LT	0.04	3.87	3.87	3.87			208.04		
51+14.42	54+50.00	LT	0.16	14.75	14.75	14.75	0.16				
51+57.42	51+98.86	RT	0.00	0.67	0.67	0.67	0.00				
53+51.51	54+50.00	RT	0.01	0.37	0.37	0.37	0.01				
TOTAL FROM SINKHOLE REPAIRS			0.50	40	40	40		2,038.00		1,497.00	1,495.00
ROUNDED TOTAL			1.50	130	130	130	0.50	3,342	1,175	1,497	1,495

INLET AND PIPE PROTECTION

FROM STATION	LT/RT	EACH
1727+96.00	RT	1
1728+54.00	RT	1
1729+49.00	RT	1
1731+69.00	RT	1
1732+28.00	LT	1
1733+83.00	LT	1
TOTAL FROM SINKHOLE REPAIRS		5
TOTAL		11

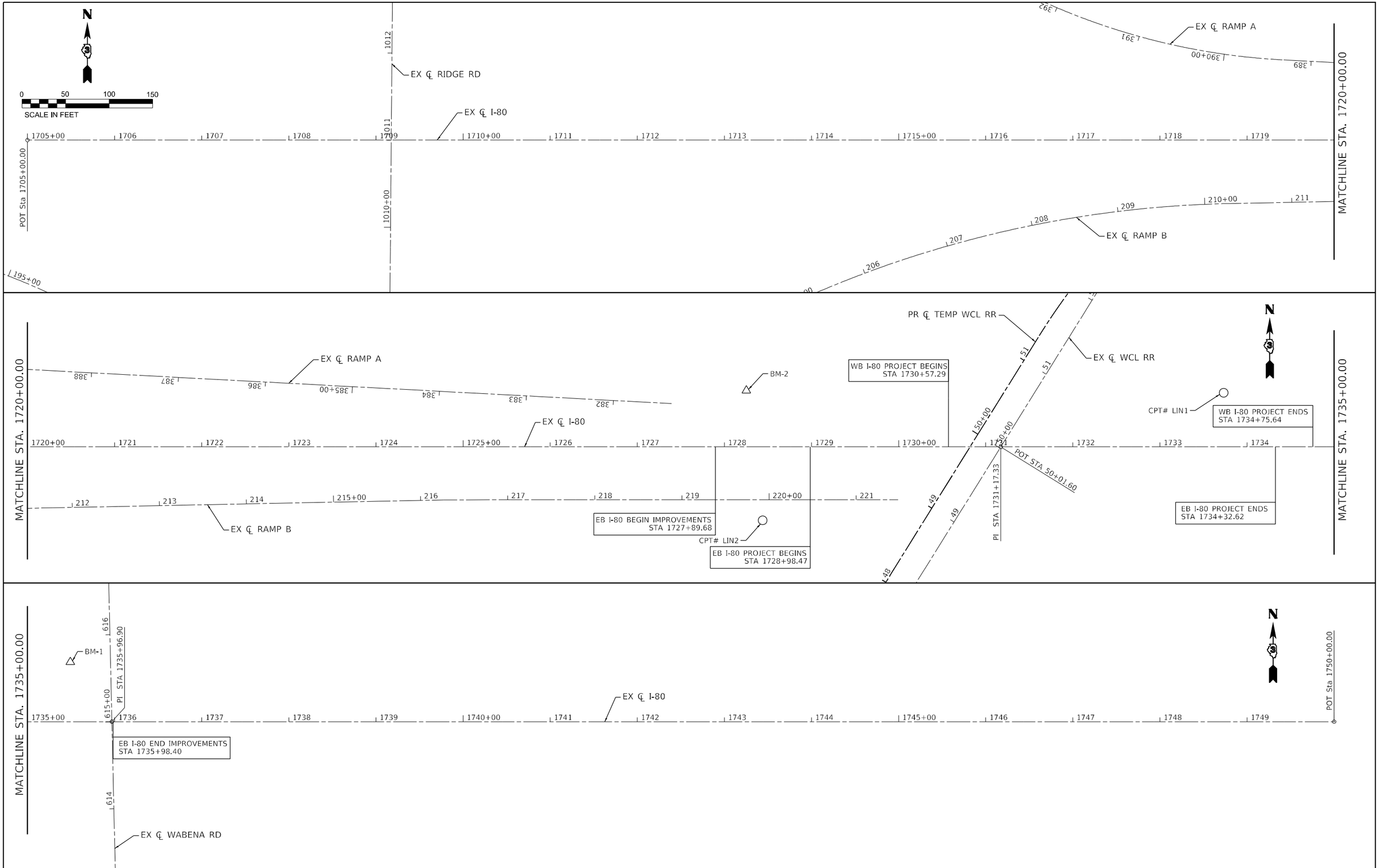

LIN ENGINEERING,LTD. Consulting Engineers Westmont, Illinois	USER NAME = 14nha	DESIGNED - JK	REVISED -	STATE OF ILLINOIS DEPARTMENT OF TRANSPORTATION	W.C. RAILROAD OVER F.A.I. ROUTE 80 ALIGNMENT, TIES AND BENCHMARKS	F.A.I. RTE.	SECTION	COUNTY	TOTAL SHEETS / SHEET NO.
		DRAWN - JK	REVISED -			80	(32, 47-4)VB, HBR-3	GRUNDY/KENDALL	143 / 17
	PLOT SCALE = 100.0000 ' / in.	CHECKED - ST	REVISED -					CONTRACT NO. 66295	
	PLOT DATE = 1/9/2025	DATE - 1/2025	REVISED -		SCALE: 1"=50' SHEET 1 OF 4 SHEETS STA. 1705+00.00 TO STA. 1750+00.00			ILLINOIS FED. AID PROJECT	

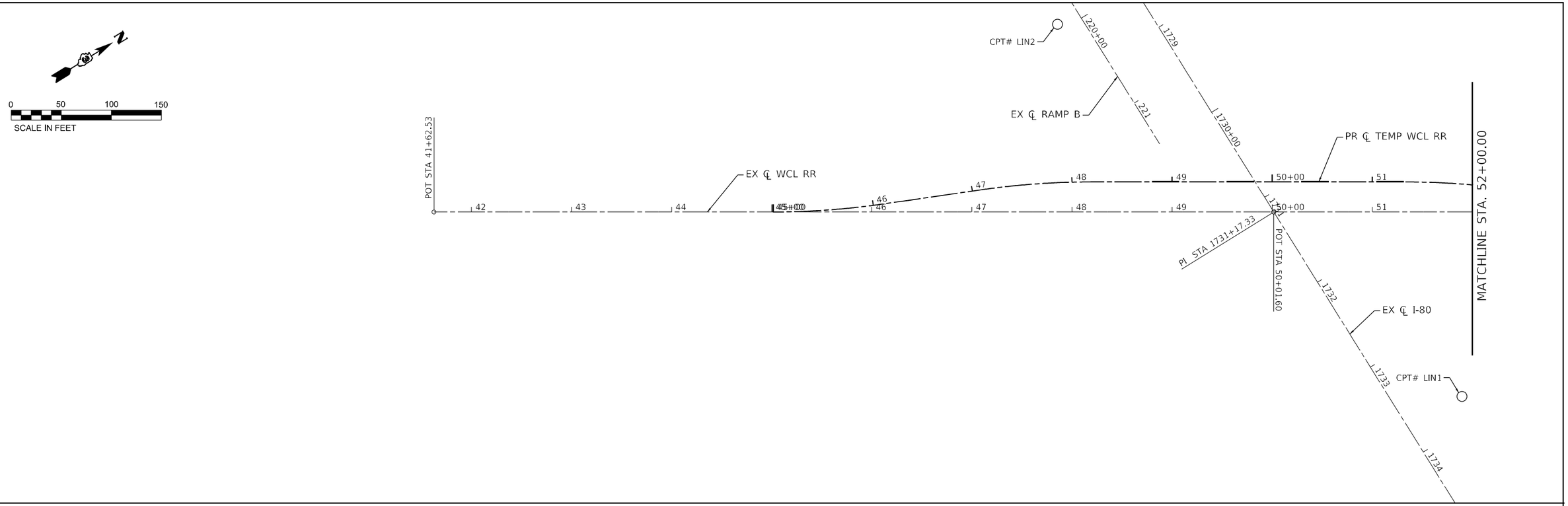

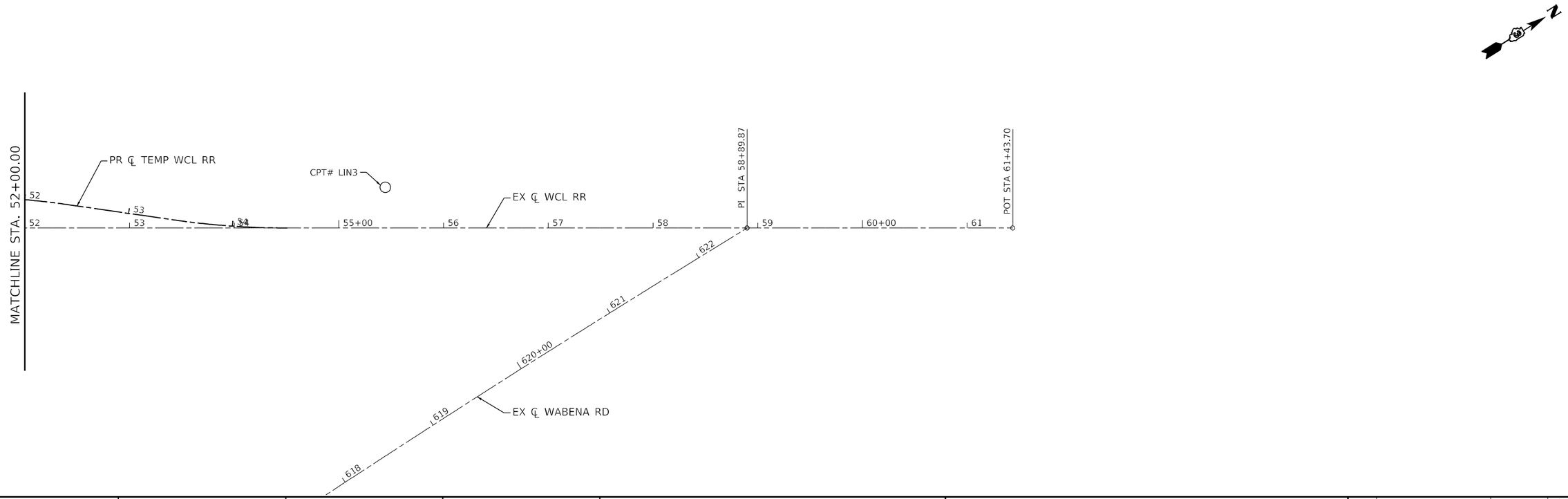

LIN ENGINEERING,LTD. Consulting Engineers Westmont, Illinois	USER NAME = 14nho	DESIGNED - JK	REVISED -	STATE OF ILLINOIS DEPARTMENT OF TRANSPORTATION	W.C. RAILROAD OVER F.A.I. ROUTE 80 ALIGNMENT, TIES AND BENCHMARKS			F.A.I. RTE.	SECTION	COUNTY	TOTAL SHEETS / SHEET NO.
		DRAWN - JK	REVISED -					80	(32, 47-4)VB, HBR-3	GRUNDY/KENDALL	143 / 18
	PLOT SCALE = 100.0000 ' / in.	CHECKED - ST	REVISED -							CONTRACT NO. 66295	
	PLOT DATE = 1/9/2025	DATE - 1/2025	REVISED -		SCALE: 1"=50'	SHEET 2 OF 4 SHEETS	STA. 41+62.53 TO STA. 61+43.70		ILLINOIS	FED. AID PROJECT	

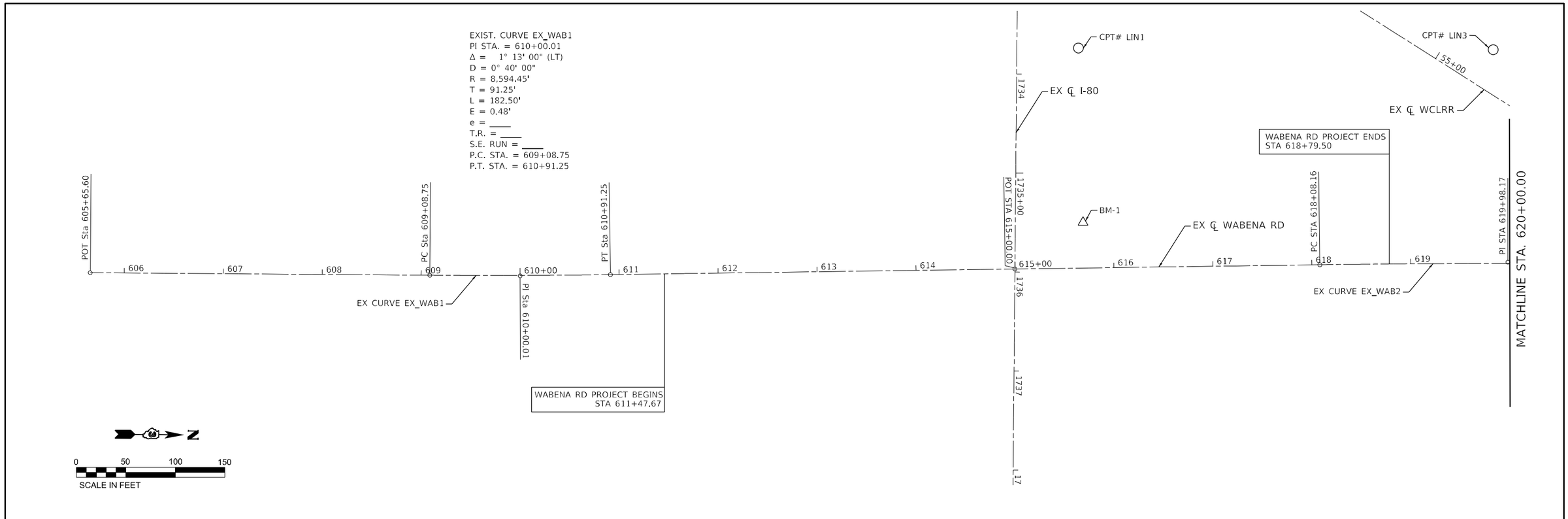

LIN ENGINEERING,LTD. Consulting Engineers Westmont, Illinois	USER NAME = 14nha	DESIGNED - NH	REVISED -	STATE OF ILLINOIS DEPARTMENT OF TRANSPORTATION	W.C. RAILROAD OVER F.A.I. ROUTE 80 WABENA RD ALIGNMENT, TIES AND BENCHMARKS
		DRAWN - NH	REVISED -		
	PLOT SCALE = 100.0000 ' / in.	CHECKED - ST	REVISED -		
	PLOT DATE = 1/9/2025	DATE - 1/2025	REVISED -		SCALE: 1"=50' SHEET 3 OF 4 SHEETS STA. 605+65.60 TO STA. 622+54.19

F.A.I. RTE.	SECTION	COUNTY	TOTAL SHEETS	SHEET NO.
80	(32, 47-4)VB, HBR-3	GRUNDY/KENDALL	143	19
		CONTRACT NO. 66295		
		ILLINOIS FED. AID PROJECT		

CONTROL POINTS

CONTROL POINT #	NORTHING	EASTING	ELEVATION	STATION	OFFSET	DESCRIPTION
LIN1	1746799.154	1003626.933	611.051	1733+73.16	62.18 LT	⅜" REBAR W/ CAP SET NORTH OF I-80
LIN2	1746634.861	1003103.013	609.381	1728+43.95	84.32 RT	⅜" REBAR W/ CAP SET SOUTH OF I-80
LIN3	1747217.934	1003610.802	633.123	55+44.30	38.88 LT	⅜" REBAR W/ CAP SET WEST OF RAILROAD

ALIGNMENT COORDINATES

	ALIGNMENT	STATION	NORTHING	EASTING
POT	WCL RR	41+62.53	1746001.493	1002954.236
POT	TEMP WCL RR	50+01.60	1746743.354	1003347.394
POT	WCL RR	50+01.60	1746728.368	1003373.382
POT	WCL RR	61+43.70	1747717.759	1003943.906
POT	I-80	1705+00.00	1746639.972	1000757.549
PI	I-80	1731+17.33	1746728.368	1003373.382
PI	I-80	1735+96.90	1746744.565	1003852.683
POT	I-80	1750+00.00	1746791.952	1005254.982
POT	WABENA RD	605+65.60	1745811.230	1003896.296
PC	WABENA RD	609+08.75	1746154.168	1003884.174
PI	WABENA RD	610+00.01	1746245.365	1003880.951
PT	WABENA RD	610+91.25	1746336.473	1003875.792
POT	WABENA RD	615+00.00	1746744.565	1003852.683
PC	WABENA RD	618+08.16	1747052.230	1003835.261
PI	WABENA RD	619+98.17	1747241.938	1003824.519
PT	WABENA RD	621+88.16	1747431.871	1003819.022
POT	WABENA RD	622+54.19	1747497.875	1003817.112

CURVE DATA

CURVE NO.	CURVE NAME	CENTERLINE	PC		PI		PT	
			NORTH	EAST	NORTH	EAST	NORTH	EAST
TEMP WCL RR CURVE-1	PROP. CURVE PTEMPRUNAROUN_1	TEMP WCL RR	1746294.768	1003123.350	1746342.350	1003150.788	1746393.366	1003171.142
TEMP WCL RR CURVE-2	PROP. CURVE PTEMPRUNAROUN_4	TEMP WCL RR	1746486.246	1003208.199	1746537.262	1003228.552	1746584.844	1003255.990
TEMP WCL RR CURVE-3	PROP. CURVE PTEMPRUNAROUN_9	TEMP WCL RR	1746857.319	1003413.110	1746904.901	1003440.548	1746948.072	1003474.506
TEMP WCL RR CURVE-4	PROP. CURVE PTEMPRUNAROUN_12	TEMP WCL RR	1747026.670	1003536.331	1747069.841	1003570.290	1747117.423	1003597.727
EX CURVE EX_WAB1	EXIST. CURVE EX_WAB1	WABENA RD	1746154.168	1003884.174	1746245.365	1003880.951	1746336.473	1003875.792
EX CURVE EX_WAB2	EXIST. CURVE EX_WAB2	WABENA RD	1747052.230	1003835.261	1747241.938	1003824.519	1747431.871	1003819.022

BENCHMARK LIST

BM #	NORTHING	EASTING	ELEVATION	STATION	OFFSET	DESCRIPTION
BM 1	1746811.279	1003802.684	615.462	1735+49.18	68.36 LT	CHISELED SQUARE ON CENTER OF WEST HEADWALL OF CULVERT UNDER WABENA RD ON NORTH SIDE OF I-80
BM 2	1746783.225	1003079.229	609.798	1728+25.19	64.76 LT	SOUTH BOLT OF 1ST LARGE LIGHT TOWER WEST OF RR BRIDGE ON NORTH SIDE OF I-80

LEGEND

- (A) EX SUB-BASE MATL., 12"
- (B) EX HMA/BAM STABILIZED SUBBASE, 6"
- (C) EX CONT. REINFORCED PCC PAVEMENT 13¾"
- (D) EX CONCRETE BARRIER
- (E) EX AGG WEDGE SHOULDER, TY B
- (F) EX GUARDRAIL
- (G) PR CONT. REINFORCED PCC PAVEMENT, 14"
- (H) PR STABILIZED SUBBASE - HMA, 4"
- (I) PR AGG SUBGRADE IMPROVEMENT, 12"
- (J) PR HMA STABILIZATION 6" AT SPBGR
- (K) PR TIE BARS - INCIDENTAL TO PR PCC PVMT
- (L) PR GUARDRAIL
- (M) PR CONC BARRIER TRANSITION
- (N) PR CONC BARRIER BASE
- (O) PR GEOTECHNICAL FABRIC FOR GROUND STABILIZATION
- (P) PR PIPE UNDERDRAINS, TYPE 3

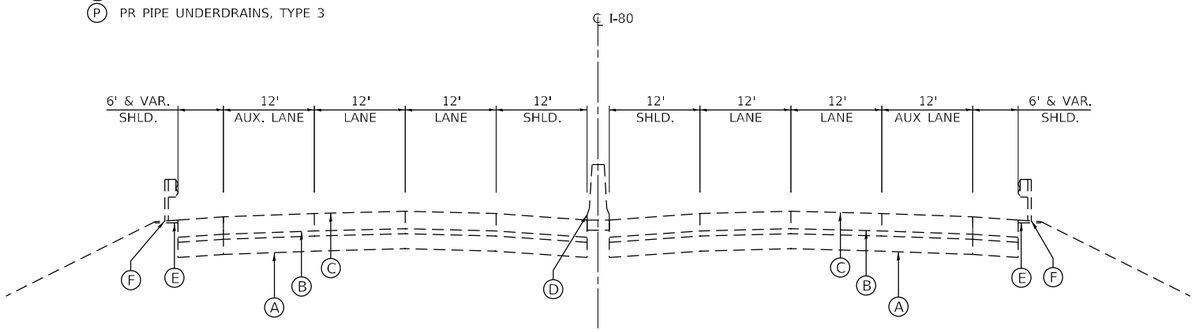

EXISTING TYPICAL SECTION

I-80 UNDER WCL RR
(LOOKING EAST)
STA 1728+98.47 TO 1734+32.62 RT
STA 1731+02.18 TO 1734+75.64 LT

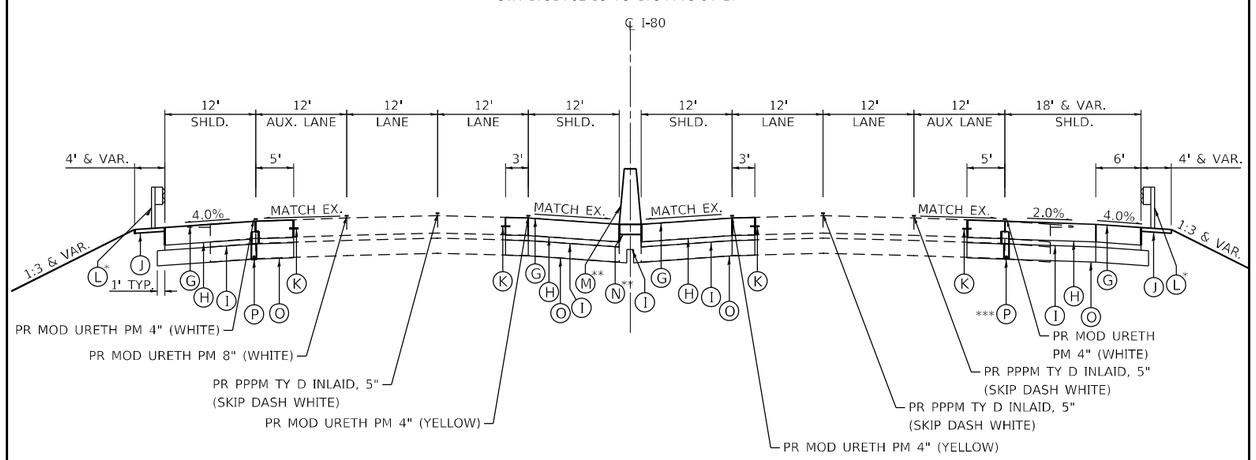

PROPOSED TYPICAL SECTION

I-80 UNDER WCL RR
(LOOKING EAST)
STA 1728+98.47 TO 1734+32.62 RT
STA 1731+02.18 TO 1734+75.64 LT

*LIMITS OF PR GUARDRAIL
STA 1728+11.76 TO STA 1735+98.40 RT
STA 1731+77.73 TO STA 1734+53.64 LT

** LIMITS OF PR CONC BARRIER TRANSITION
STA 1730+57.29 TO STA 1731+44.16

***LIMITS OF PR UNDERDRAINS
STA 1728+98.47 TO 1731+32.62

LEGEND

- (A) EXISTING HMA PAVEMENT, 8"
- (B) EXISTING AGGREGATE SUBGRADE IMPROVEMENT, 12"
- (C) EXISTING GUARDRAIL
- (D) PROPOSED HMA BUTT JOINT
  PROPOSED HMA SC IL-9.5 D N50, 1.5"
- (E) PROPOSED AGGREGATE WEDGE SHOULDERS, TYPE B
- (F) PROPOSED STEEL PLATE BEAM GUARDRAIL, TYPE A, 9 FT POSTS

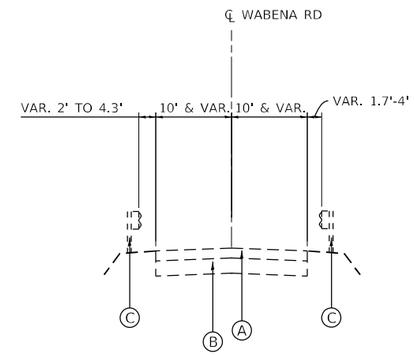

EXISTING TYPICAL SECTION

WABENA RD
LOOKING NORTH
STA 613+69.62 TO STA 613+99.62
STA 616+00.37 TO STA 616+30.38

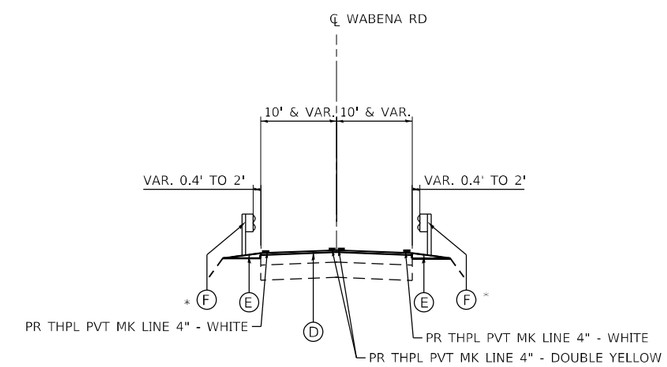

PROPOSED TYPICAL SECTION

WABENA RD
LOOKING NORTH
STA 613+69.62 TO STA 613+99.62
STA 616+00.37 TO STA 616+30.38

* LIMITS OF PR GUARDRAIL
STA 611+87.95 TO STA 614+03.06 RT
STA 612+13.58 TO STA 614+03.35 LT
STA 615+96.35 TO STA 618+23.97 RT
STA 615+96.90 TO STA 618+36.98 LT

LIN ENGINEERING,LTD. Consulting Engineers Westmont, Illinois	USER NAME = 14nho	DESIGNED - RC	REVISED -
		DRAWN - RC	REVISED -
	PLOT SCALE = 20.0000 ' / in.	CHECKED - ST	REVISED -
	PLOT DATE = 1/9/2025	DATE - 1/2025	REVISED -

STATE OF ILLINOIS
DEPARTMENT OF TRANSPORTATION

W.C. RAILROAD OVER F.A.I. ROUTE 80
WABENA RD & I-80 TYPICAL SECTIONS

SCALE: N.T.S. | SHEET 1 OF 1 SHEETS | STA. TO STA.

F.A.I. RTE.	SECTION	COUNTY	TOTAL SHEETS	SHEET NO.
80	(32, 47-4)VB, HBR-3	GRUNDY/KENDALL	143	21
		CONTRACT NO. 66295		
		ILLINOIS FED. AID PROJECT		

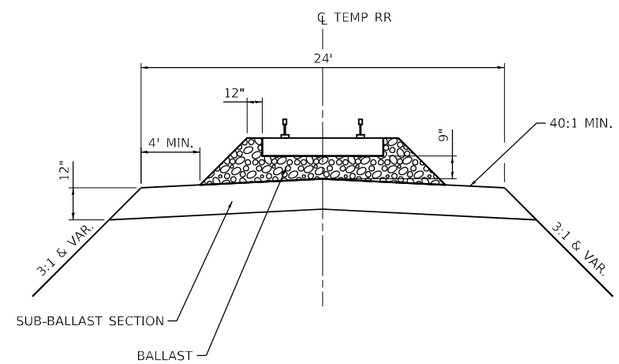

TEMPORARY RAILROAD TYPICAL SECTION

LIN ENGINEERING,LTD. Consulting Engineers Westmont, Illinois	USER NAME = 14nho	DESIGNED - RC	REVISED -	STATE OF ILLINOIS DEPARTMENT OF TRANSPORTATION	W.C. RAILROAD OVER F.A.I. ROUTE 80 TEMPORARY RAILROAD TYPICAL SECTION	F.A.I. RTE.	SECTION	COUNTY	TOTAL SHEETS	SHEET NO.
		DRAWN - RC	REVISED -			80	(32, 47-4)VB, HBR-3	GRUNDY/KENDALL	143	22
	PLOT SCALE = 20.0000 ' / in.	CHECKED - ST	REVISED -					CONTRACT NO. 66295		
	PLOT DATE = 1/9/2025	DATE - 1/2025	REVISED -		SCALE: N.T.S. SHEET 1 OF 1 SHEETS STA. TO STA.		ILLINOIS FED. AID PROJECT			

MAINTENANCE OF TRAFFIC GENERAL NOTES

1. THE MAINTENANCE OF TRAFFIC PLANS SHALL SERVE AS A GUIDE FOR THE SAFE DIVERSION OF TRAFFIC DURING THE EXECUTION OF THIS CONTRACT. THE CONTRACTOR MAY MODIFY THE MAINTENANCE OF TRAFFIC PLANS TO MEET CONSTRUCTION NEEDS BUT NOT AT THE EXPENSE OF PUBLIC SAFETY OR CONVENIENCE. ANY CHANGES TO THE TRAFFIC CONTROL PLANS SHALL BE SUBMITTED TO THE ENGINEER FOR APPROVAL.
2. THE REMOVAL OF ALL TEMPORARY PAVEMENT MARKING TAPE WILL BE PAID FOR AT THE CONTRACT UNIT PRICE PER SQUARE FOOT FOR SHORT TERM PAVEMENT MARKING REMOVAL.
3. TEMPORARY PAVEMENT MARKING TAPE, TYPE IV SHALL BE USED FOR ANY SHORT TERM PAVEMENT MARKINGS ON FINAL SURFACES.
4. ALL TRAFFIC CONTROL DEVICES SHALL BE REFLECTORIZED PRIOR TO INSTALLATION AND CLEANED AS SPECIFIED IN THE TRAFFIC CONTROL SPECIAL PROVISIONS OR AS DIRECTED BY THE ENGINEER.
5. FOR STABILIZATION, ANY REQUIRED TYPE III BARRICADES SHALL REQUIRE A MINIMUM OF EIGHT SAND BAGS PER BARRICADE.
6. EXISTING SIGNS WITHIN THE LIMITS OF TRAFFIC CONTROL WHICH ARE OBSTRUCTED BY OR OTHERWISE INTERFERED WITH BY CONSTRUCTION OPERATIONS OF DESIGNATED TRAFFIC CONTROL, SHALL BE COVERED OR REMOVED BY THE CONTRACTOR UNLESS SPECIFIED IN THE PLANS OR WHEN DIRECTED BY THE ENGINEER. THIS WORK SHALL BE AS SPECIFIED IN ARTICLE 107.25 OF THE STANDARD SPECIFICATIONS.
7. SEE STRUCTURAL PLANS FOR BRIDGE RECONSTRUCTION INFORMATION.
8. EXISTING PAVEMENT MARKINGS THAT CONFLICT WITH TEMPORARY MARKINGS SHALL BE REMOVED. THIS WORK WILL BE PAID FOR AT THE CONTRACT UNIT PRICE PER SQUARE FOOT FOR PAVEMENT MARKING REMOVAL - WATER BLASTING.
9. EXISTING RAISED REFLECTIVE PAVEMENT MARKER REFLECTORS THAT CONFLICT WITH THE REVISED TRAFFIC PATTERNS, SHALL BE REMOVED FROM THE EXISTING CASTINGS LOCATED IN THE PAVEMENT. THIS WORK WILL BE PAID FOR AT THE CONTRACT UNIT PRICE PER EACH FOR RAISED REFLECTIVE PAVEMENT MARKER, REFLECTOR REMOVAL.
10. CHANGEABLE MESSAGE BOARDS WILL BE PLACED 2 WEEKS PRIOR TO START OF WORK, AT LOCATIONS DETERMINED BY THE ENGINEER, FOR ADVANCED WARNING.
11. DETOUR PLANS INCLUDED IN THIS CONTRACT SHALL SERVE AS A GUIDE FOR THE DIVERSION OF TRAFFIC DURING 15 MINUTE FULL STOP CLOSURES ALONG WB & EB I-80 REQUIRED TO CONSTRUCT S.N. 032-9006. THIS WORK WILL BE PAID FOR AT THE CONTRACT UNIT PRICE FOR TRAFFIC CONTROL AND PROTECTION (SPECIAL).
12. DURING THE 15 MINUTE FULL STOP CLOSURES ALONG WB & EB I-80 REQUIRED TO CONSTRUCT S.N. 032-9006, THE EXISTING TRAFFIC SIGNAL AT THE INTERSECTION OF BRISBIN ROAD AND US ROUTE 6 SHALL BE SET TO YELLOW FLASHING MODE AND FLAGGERS UTILIZED AT THE INTERSECTION FOR THE DURATION OF THE FULL CLOSURE TO AVOID TRAFFIC QUEUING ALONG BRISBIN ROAD. THIS WORK WILL BE PAID FOR AT THE CONTRACT UNIT PRICE FOR TRAFFIC CONTROL AND PROTECTION (SPECIAL).
13. ALL DRUMS, VERTICAL PANELS, AND BARRICADES ADJACENT TO THE EDGE OF THE TRAVELED WAY SHALL BE EQUIPPED WITH MONO-DIRECTIONAL STEADY BURNING LIGHTS.
14. ALL SIGNS DESIGNATED AS ORANGE SHALL BE CONSTRUCTED OF FLUORESCENT ORANGE SHEETING WITH BLACK LETTERING.

SUGGESTED SEQUENCE OF OPERATIONS

STAGE 1

1. INSTALL TRAFFIC CONTROL DEVICES AND TEMPORARY PAVEMENT MARKINGS AS SHOWN IN THE STAGE 1 STAGING PLANS.
2. SHIFT WB & EB I-80 TRAFFIC ONTO THE OUTSIDE SHOULDERS. CLOSE THE WB & EB INSIDE SHOULDERS AND LANE 1 AS SHOWN IN THE STAGE 1 STAGING PLANS.
3. CLOSE WABENA ROAD TO TRAFFIC AT S.N. 032-0065 AS SHOWN IN THE WABENA ROAD CLOSURE PLAN.
4. CONSTRUCT TEMPORARY MEDIAN PIER AND TEMPORARY ABUTMENTS FOR TEMPORARY RUNAROUND STRUCTURE AS SHOWN IN THE STAGE 1 STAGING AND STRUCTURAL PLANS.
5. DURING THE ALLOWABLE TEMPORARY LANE CLOSURE HOURS FOR I-80 LISTED IN THE KEEPING ROADS OPEN TO TRAFFIC SPECIAL PROVISION, UTILIZE FULL STOP 15 MIN CLOSURES TO ERECT S.N. 032-9906 BEAMS AT LOCATIONS SHOWN IN THE STRUCTURAL PLANS.
6. DURING THE ALLOWABLE TEMPORARY NIGHTLY LANE CLOSURE HOURS FOR I-80 LISTED IN THE KEEPING ROADS OPEN TO TRAFFIC SPECIAL PROVISION, INSTALL PROTECTIVE SHIELDING UNDERNEATH S.N. 032-0065 AT LOCATIONS SHOWN IN THE STRUCTURAL PLANS.
7. CONSTRUCT TEMPORARY PAVEMENT AT LOCATIONS SHOWN IN THE STAGING PLANS.

STAGE 2

1. BEFORE BEGINNING ANY WORK ON REMOVAL OF THE EXISTING STRUCTURE, AND ONCE CONSTRUCTION OF TEMPORARY RUNAROUND STRUCTURE IS COMPLETED, TRAIN TRAFFIC SHALL BE SHIFTED ONTO THE TEMPORARY RUNAROUND STRUCTURE AS SHOWN ON THE PLANS.
2. INSTALL TRAFFIC CONTROL DEVICES AND TEMPORARY PAVEMENT MARKINGS AS SHOWN IN THE STAGE 2 STAGING PLANS.
3. SHIFT WB & EB I-80 TRAFFIC ONTO THE OUTSIDE SHOULDERS. CLOSE THE WB & EB INSIDE SHOULDERS AND LANE 1 AS SHOWN IN THE STAGE 2 STAGING PLANS.
4. PERFORM MEDIAN PIER RECONSTRUCTION AS SHOWN IN THE STAGE 2 STAGING AND STRUCTURAL PLANS.
5. PERFORM ROADWAY AND STRUCTURAL IMPROVEMENTS ON WABENA ROAD AND S.N. 032-0065.
6. REMOVE EXISTING PAVEMENT AND MEDIAN CONCRETE BARRIER WALL AND CONSTRUCT PROPOSED PAVEMENT AND MEDIAN CONCRETE BARRIER TRANSITION AT LOCATIONS SHOWN IN THE STAGING AND ROADWAY PLANS.

STAGE 3

1. INSTALL TRAFFIC CONTROL DEVICES AND TEMPORARY PAVEMENT MARKINGS AS SHOWN IN THE STAGE 3 STAGING PLANS.
2. SHIFT WB & EB I-80 TRAFFIC ONTO THE INSIDE SHOULDERS. CLOSE THE WB & EB OUTSIDE SHOULDERS AND LANE 3 AS SHOWN IN THE STAGE 3 STAGING PLANS.
3. PERFORM OUTSIDE ABUTMENT RECONSTRUCTION AS SHOWN IN THE STAGE 3 STAGING AND STRUCTURAL PLANS.
4. CONTINUE ROADWAY AND STRUCTURAL IMPROVEMENTS ON WABENA ROAD AND S.N. 032-0065.
5. DURING THE ALLOWABLE TEMPORARY LANE CLOSURE HOURS FOR I-80 LISTED IN THE KEEPING ROADS OPEN TO TRAFFIC SPECIAL PROVISION, UTILIZE FULL STOP 15 MIN CLOSURES TO ERECT S.N. 032-9906 AT LOCATIONS SHOWN IN THE STRUCTURAL PLANS.
6. REMOVE EXISTING PAVEMENT AND GUARDRAIL AND CONSTRUCT PROPOSED PAVEMENT, PAVEMENT WIDENING, AND GUARDRAIL AT LOCATIONS SHOWN IN THE STAGING AND ROADWAY PLANS.

STAGE 4

1. INSTALL TRAFFIC CONTROL DEVICES AND TEMPORARY PAVEMENT MARKINGS AS SHOWN IN THE STAGE 4 STAGING PLANS.
2. SHIFT WB & EB I-80 TRAFFIC ONTO THE OUTSIDE SHOULDERS. CLOSE THE WB & EB INSIDE SHOULDERS AND LANE 1 AS SHOWN IN THE STAGE 4 STAGING PLANS.
3. REMOVE TEMPORARY MEDIAN PIER AND TEMPORARY ABUTMENTS FOR TEMPORARY RUNAROUND STRUCTURE AS SHOWN IN THE STAGE 4 STAGING AND STRUCTURAL PLANS.
4. REMOVE TEMPORARY PAVEMENT AND CONSTRUCT PROPOSED PAVEMENT AND MEDIAN CONCRETE BARRIER TRANSITION AT LOCATIONS SHOWN IN THE STAGING AND ROADWAY PLANS.
5. DURING THE ALLOWABLE TEMPORARY NIGHTLY LANE CLOSURE HOURS FOR I-80 LISTED IN THE KEEPING ROADS OPEN TO TRAFFIC SPECIAL PROVISION, REMOVE PROTECTIVE SHIELDING UNDERNEATH S.N. 032-0065 AT THE LOCATIONS SHOWN IN THE STRUCTURAL PLANS ONCE THE IMPROVEMENTS AT S.N. 032-0065 ARE COMPLETED.

POST-STAGE

1. PLACE PERMANENT PAVEMENT MARKINGS ALONG I-80 & WABENA ROAD AT THE LOCATIONS SHOWN IN THE PLANS UTILIZING APPLICABLE HIGHWAY & DISTRICT STANDARDS DURING THE ALLOWABLE LANE CLOSURE HOURS LISTED IN THE KEEPING ROADS OPEN TO TRAFFIC SPECIAL PROVISION.

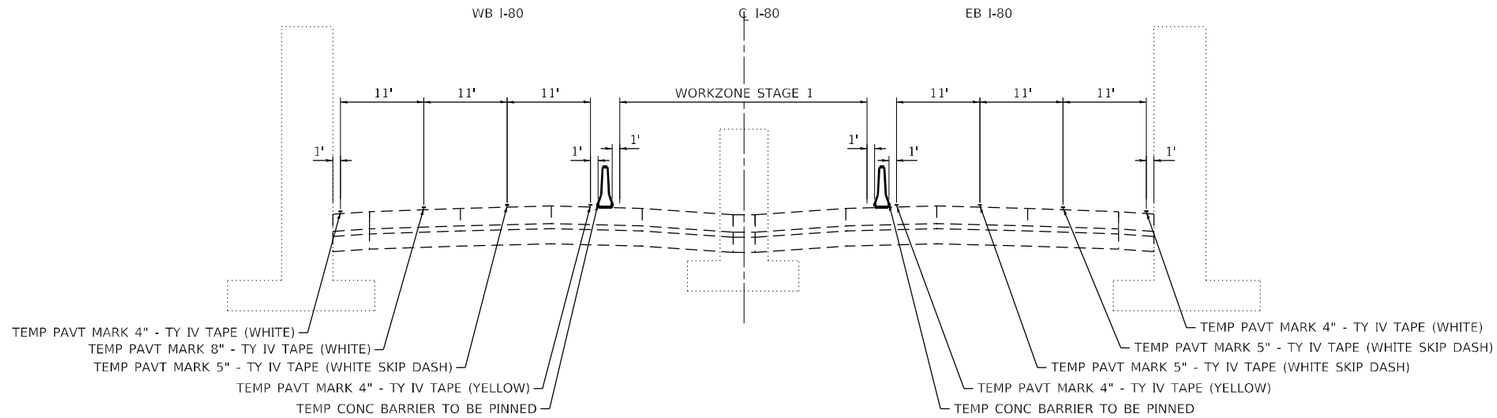

STAGE 1 TYPICAL SECTION

I-80 UNDER WCL RR
(LOOKING EAST)

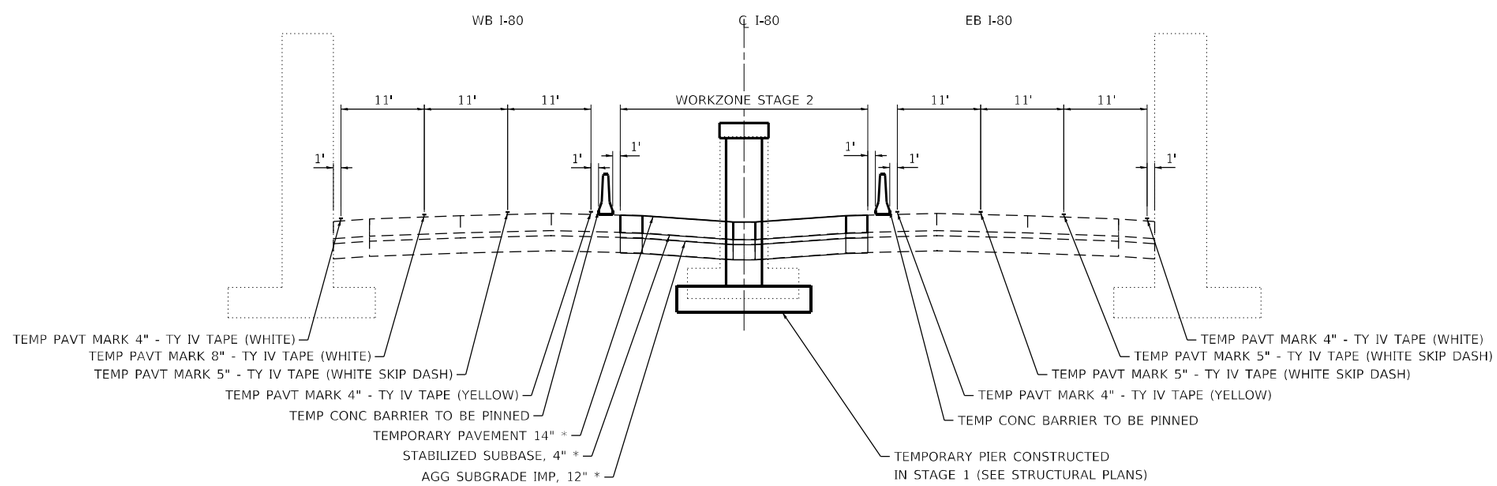

*LIMITS OF IMPROVEMENTS

TEMPORARY PAVEMENT
STA 1730+57.29 TO 1731+06.14

TEMPORARY PIER
1730+67.49 TO 1730+96.49

STAGE 2 TYPICAL SECTION

I-80 UNDER WCL RR & WABENA RD
(LOOKING EAST)

LIN ENGINEERING,LTD. Consulting Engineers Westmont, Illinois	USER NAME = 14nho	DESIGNED - RC	REVISED -	STATE OF ILLINOIS DEPARTMENT OF TRANSPORTATION	W.C. RAILROAD OVER F.A.I. ROUTE 80 MAINTENANCE OF TRAFFIC TYPICAL SECTIONS	F.A.I. RTE.	SECTION	COUNTY	TOTAL SHEETS	SHEET NO.
		DRAWN - RC	REVISED -			80	(32, 47-4)VB, HBR-3	GRUNDY/KENDALL	143	24
	PLOT SCALE = 20.0000 ' / in.	CHECKED - ST	REVISED -					CONTRACT NO. 66295		
	PLOT DATE = 1/9/2025	DATE - 1/2025	REVISED -		SCALE: N.T.S. SHEET 2 OF 11 SHEETS STA. TO STA.		ILLINOIS	FED. AID PROJECT		

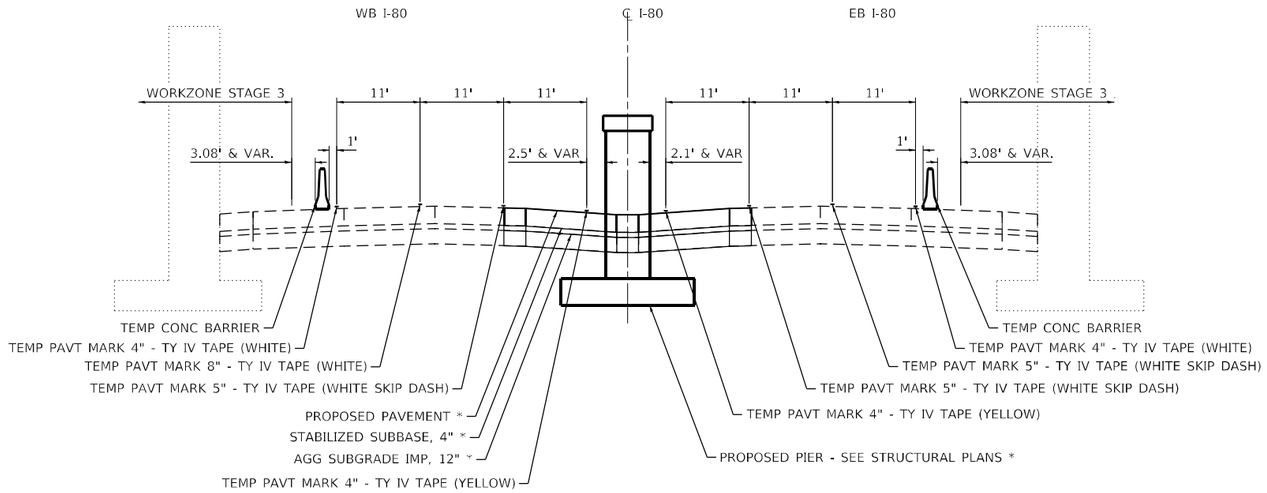

*LIMITS OF IMPROVEMENTS

TEMPORARY PAVEMENT (CONSTRUCTED IN STAGE 2)
STA 1730+57.29 TO 1731+06.14

PERMANENT PAVEMENT (CONSTRUCTED IN STAGE 2)
STA 1731+06.14 TO STA 1731+44.16

TEMPORARY PIER (CONSTRUCTED IN STAGE 1)
1730+67.49 TO 1730+96.49

PERMANENT PIER (CONSTRUCTED IN STAGE 2)
STA 1731+06.14 TO STA 1731+44.16

STAGE 3 TYPICAL SECTION

I-80 UNDER WCL RR & WABENA RD
(LOOKING EAST)

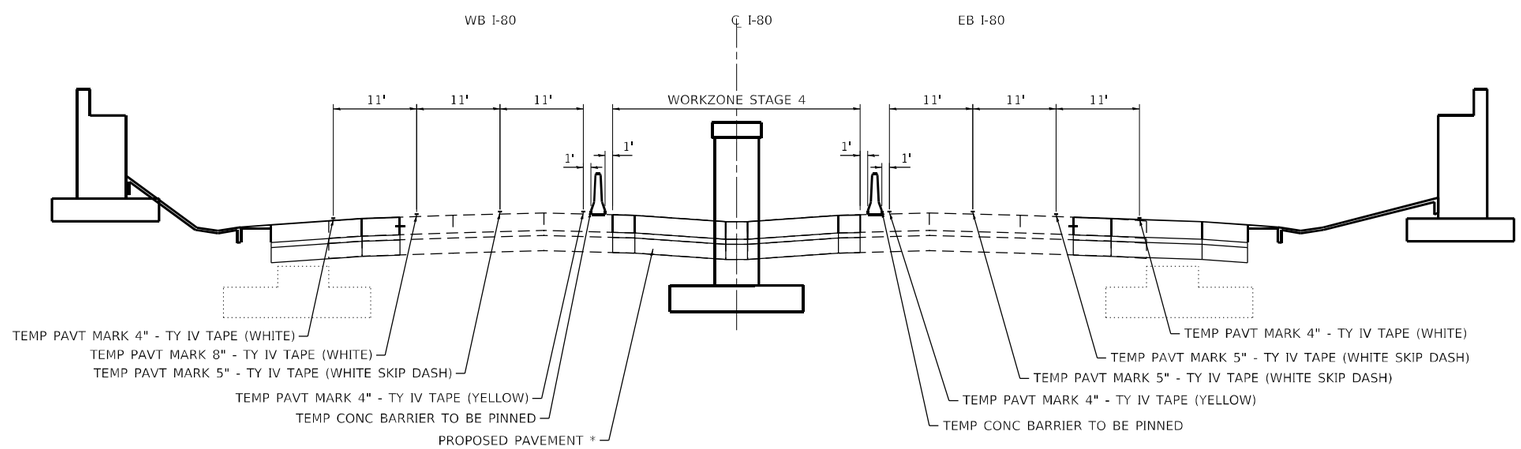

*LIMITS OF IMPROVEMENTS

PERMANENT PAVEMENT (CONSTRUCTED IN STAGE 2)
STA 1728+98.47 TO 1734+32.62 RT

PERMANENT PAVEMENT (CONSTRUCTED IN THIS STAGE)
STA 1731+02.18 TO 1734+74.64 LT

STAGE 4 TYPICAL SECTION

I-80 UNDER WCL RR
(LOOKING EAST)

LIN ENGINEERING,LTD. Consulting Engineers Westmont, Illinois	USER NAME = 14nho	DESIGNED - RC	REVISED -	STATE OF ILLINOIS DEPARTMENT OF TRANSPORTATION	W.C. RAILROAD OVER F.A.I. ROUTE 80 MAINTENANCE OF TRAFFIC TYPICAL SECTIONS	F.A.I. RTE.	SECTION	COUNTY	TOTAL SHEETS	SHEET NO.
		DRAWN - RC	REVISED -			80	(32, 47-4)VB, HBR-3	GRUNDY/KENDALL	143	25
	PLOT SCALE = 20.0000 ' / in.	CHECKED - ST	REVISED -					CONTRACT NO. 66295		
	PLOT DATE = 1/9/2025	DATE - 1/2025	REVISED -		SCALE: N.T.S. SHEET 3 OF 11 SHEETS STA. TO STA.		ILLINOIS	FED. AID PROJECT		

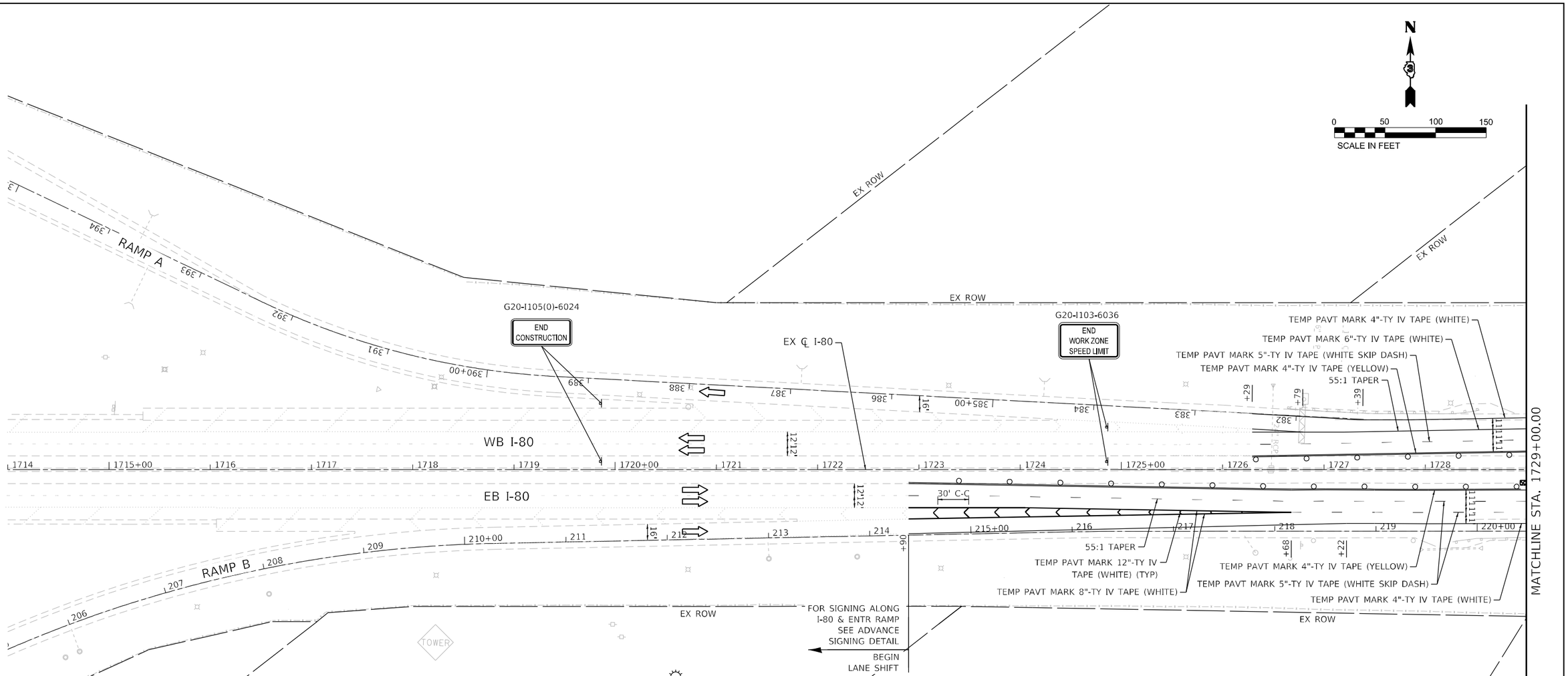

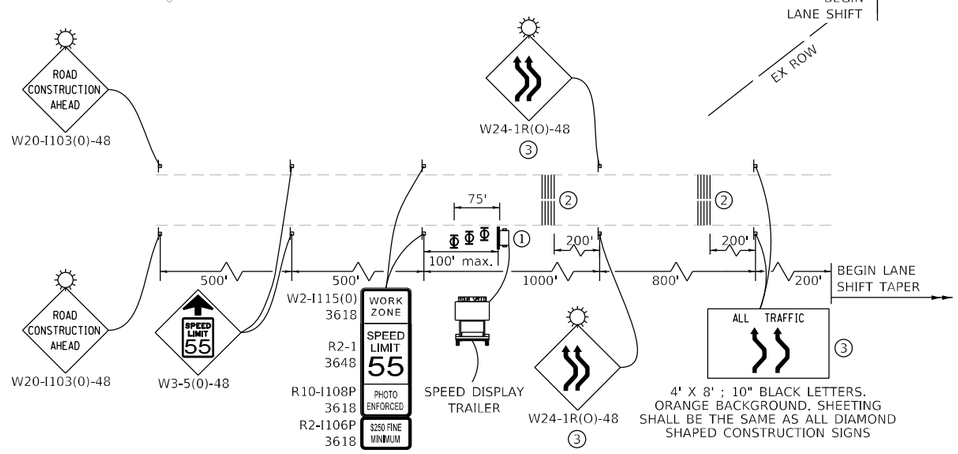

① THREE, TYPE II BARRICADES, DRUMS, OR VERTICAL BARRICADES AT 25' CENTERS.

② TEMPORARY RUMBLE STRIPS (SPECIAL)

③ SIGN PANEL NOT REQUIRED ALONG ENTRANCE RAMP.

ADVANCED SIGNING DETAIL

LEGEND

- WORKZONE
- IMPACT ATTENUATOR, TEST LEVEL 3 (TEMPORARY)
- TEMPORARY CONCRETE BARRIER
- DRUMS
- SIGN
- DIRECTION OF TRAVEL
- TEMPORARY PAVEMENT CONSTRUCTED IN PREVIOUS STAGE
- TYPE III BARRICADE

LIN ENGINEERING,LTD. Consulting Engineers Westmont, Illinois	USER NAME = 14nho	DESIGNED - RC	REVISED -	STATE OF ILLINOIS DEPARTMENT OF TRANSPORTATION	W.C. RAILROAD OVER F.A.I. ROUTE 80 MAINTENANCE OF TRAFFIC PLAN - STAGE 1
		DRAWN - RC	REVISED -		
	PLOT SCALE = 100.0000 ' / in.	CHECKED - ST	REVISED -		
	PLOT DATE = 1/9/2025	DATE - 1/2025	REVISED -		SCALE: 1"=50' SHEET 4 OF 11 SHEETS STA. 1714+00.00 TO STA. 1729+00.00

F.A.I. RTE.	SECTION	COUNTY	TOTAL SHEETS	SHEET NO.
80	(32, 47-4)VB, HBR-3	GRUNDY/KENDALL	143	26
		CONTRACT NO. 66295		
		ILLINOIS	FED. AID PROJECT	

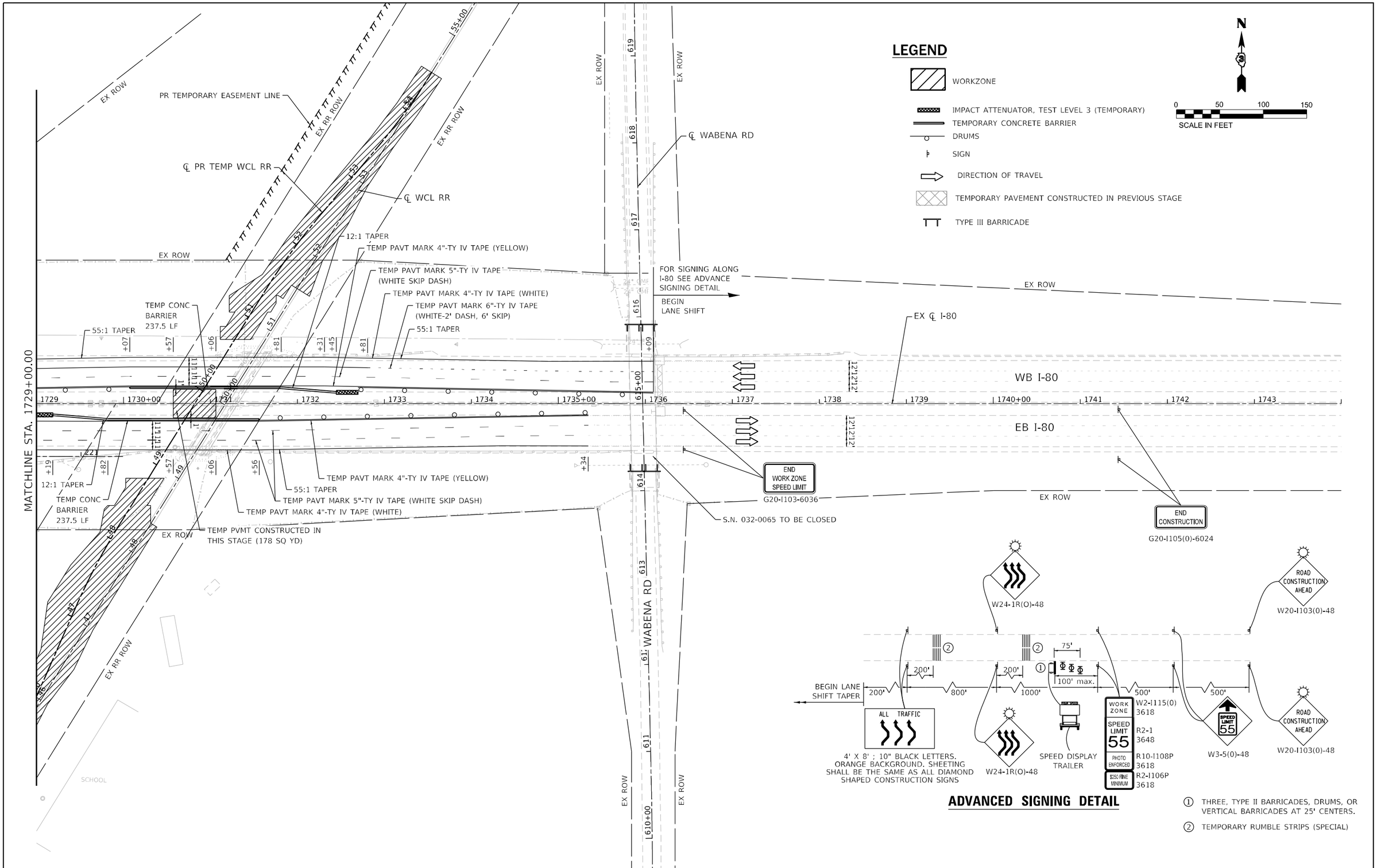

LIN ENGINEERING,LTD. Consulting Engineers Westmont, Illinois	USER NAME = 14nho	DESIGNED - RC	REVISED -
		DRAWN - RC	REVISED -
	PLOT SCALE = 100.0000 ' / in.	CHECKED - ST	REVISED -
	PLOT DATE = 1/9/2025	DATE - 1/2025	REVISED -

STATE OF ILLINOIS
DEPARTMENT OF TRANSPORTATION

W.C. RAILROAD OVER F.A.I. ROUTE 80
MAINTENANCE OF TRAFFIC PLAN - STAGE 1

SCALE: 1"=50' | SHEET 5 OF 11 SHEETS | STA. 1729+00.00 TO STA. 1744+00.00

F.A.I. RTE.	SECTION	COUNTY	TOTAL SHEETS	SHEET NO.
80	(32, 47-4)VB, HBR-3	GRUNDY/KENDALL	143	27
		CONTRACT NO. 66295		
		ILLINOIS	FED. AID PROJECT	

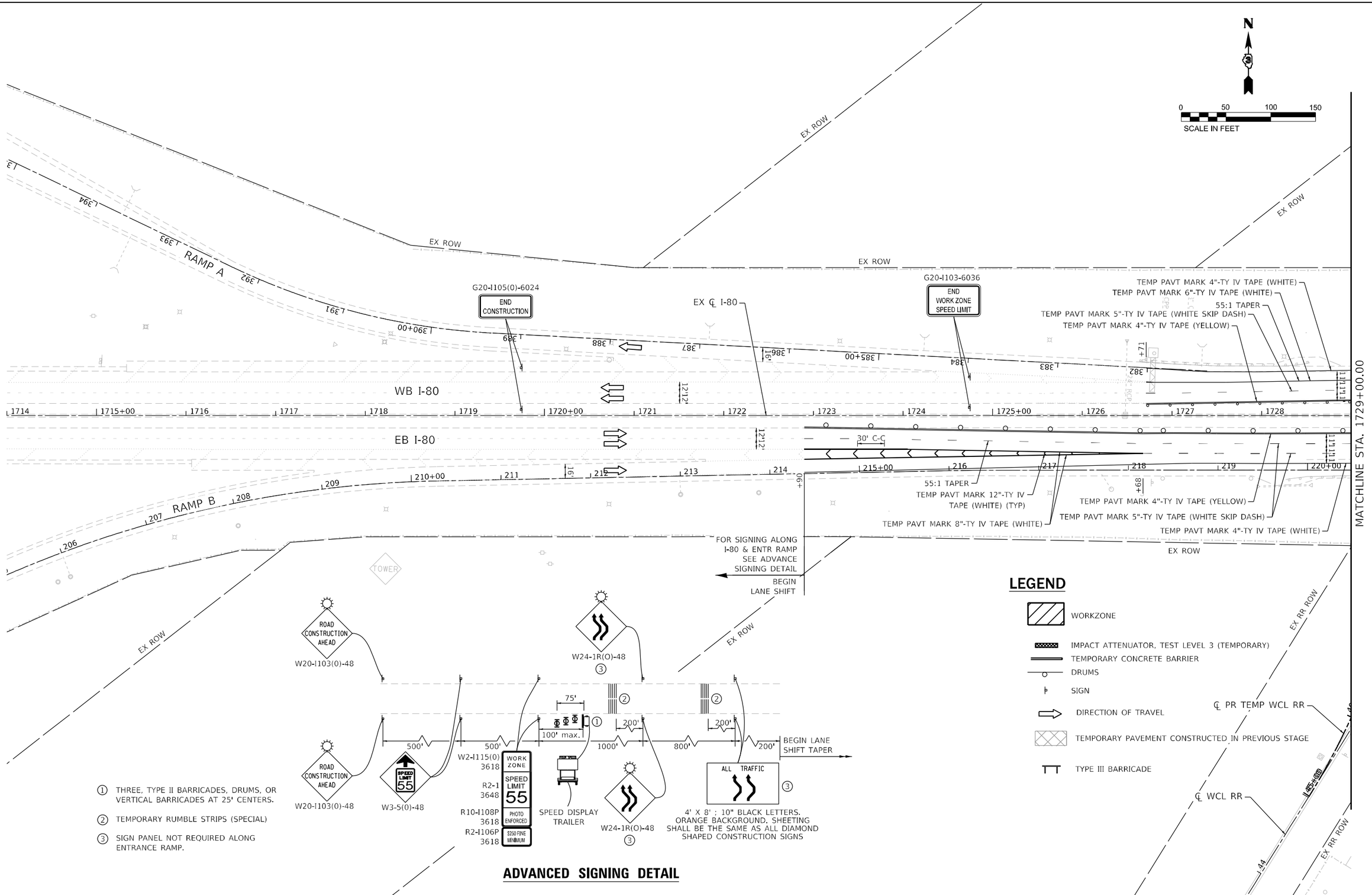

ADVANCED SIGNING DETAIL

LIN ENGINEERING,LTD. Consulting Engineers Westmont, Illinois	USER NAME = 14nha	DESIGNED - RC	REVISED -
		DRAWN - RC	REVISED -
	PLOT SCALE = 100.0000 ' / in.	CHECKED - ST	REVISED -
	PLOT DATE = 1/9/2025	DATE - 1/2025	REVISED -

STATE OF ILLINOIS
DEPARTMENT OF TRANSPORTATION

W.C. RAILROAD OVER F.A.I. ROUTE 80
MAINTENANCE OF TRAFFIC PLAN - STAGE 2

SCALE: 1"=50' | SHEET 6 OF 11 SHEETS | STA. 1714+00.00 TO STA. 1729+00.00

F.A.I. RTE.	SECTION	COUNTY	TOTAL SHEETS	SHEET NO.
80	(32, 47-4)VB, HBR-3	GRUNDY/KENDALL	143	28

CONTRACT NO. 66295

ILLINOIS | FED. AID PROJECT

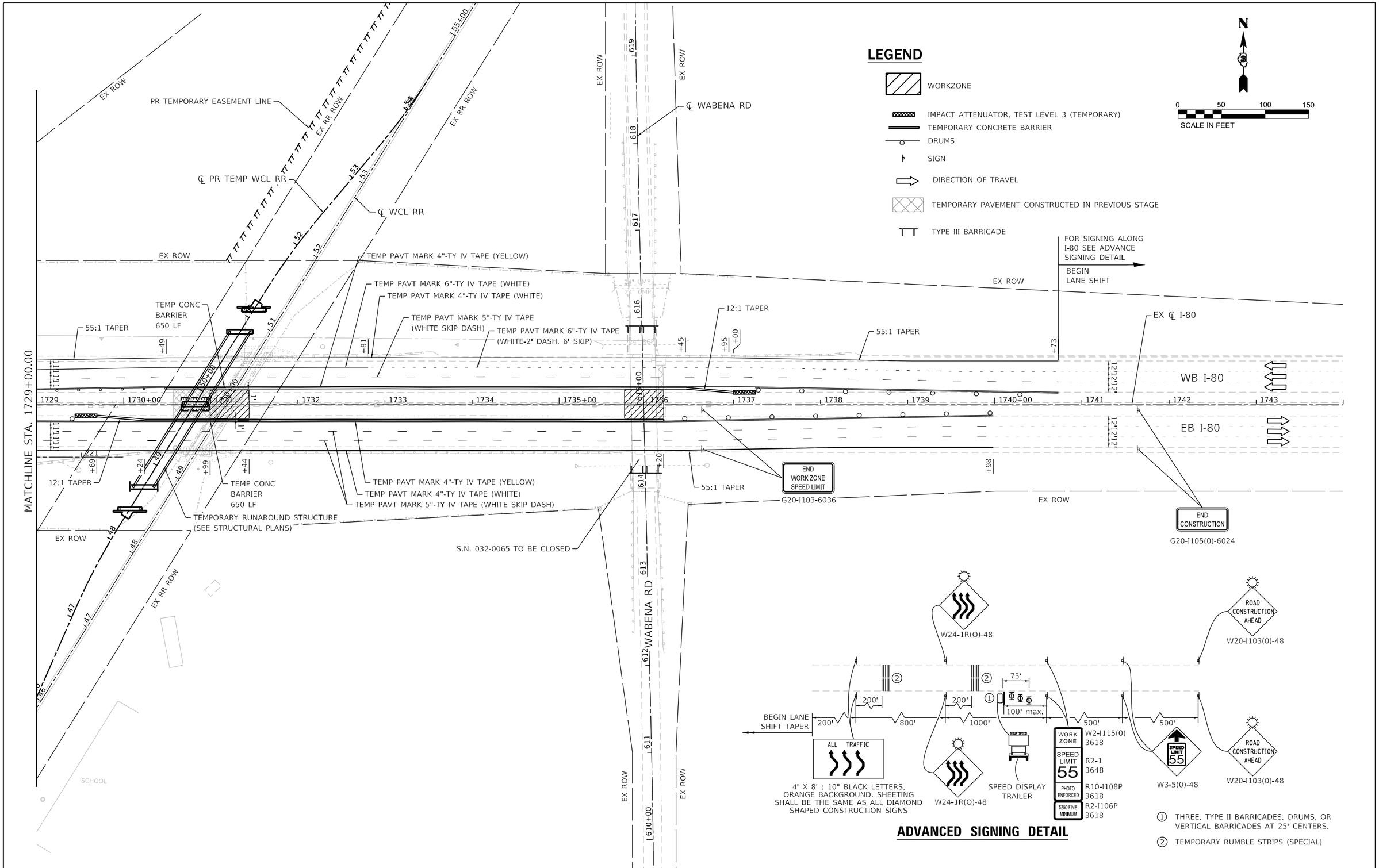

LIN ENGINEERING,LTD. Consulting Engineers Westmont, Illinois	USER NAME = 14nho	DESIGNED - RC	REVISED -
		DRAWN - RC	REVISED -
	PLOT SCALE = 100.0000 ' / in.	CHECKED - ST	REVISED -
	PLOT DATE = 1/9/2025	DATE - 1/2025	REVISED -

STATE OF ILLINOIS
DEPARTMENT OF TRANSPORTATION

W.C. RAILROAD OVER F.A.I. ROUTE 80
MAINTENANCE OF TRAFFIC PLAN - STAGE 2

SCALE: 1"=50' | SHEET 7 OF 11 SHEETS | STA. 1729+00.00 TO STA. 1744+00.00

F.A.I. RTE.	SECTION	COUNTY	TOTAL SHEETS	SHEET NO.
80	(32, 47-4)VB, HBR-3	GRUNDY/KENDALL	143	29
		CONTRACT NO. 66295		
		ILLINOIS	FED. AID PROJECT	

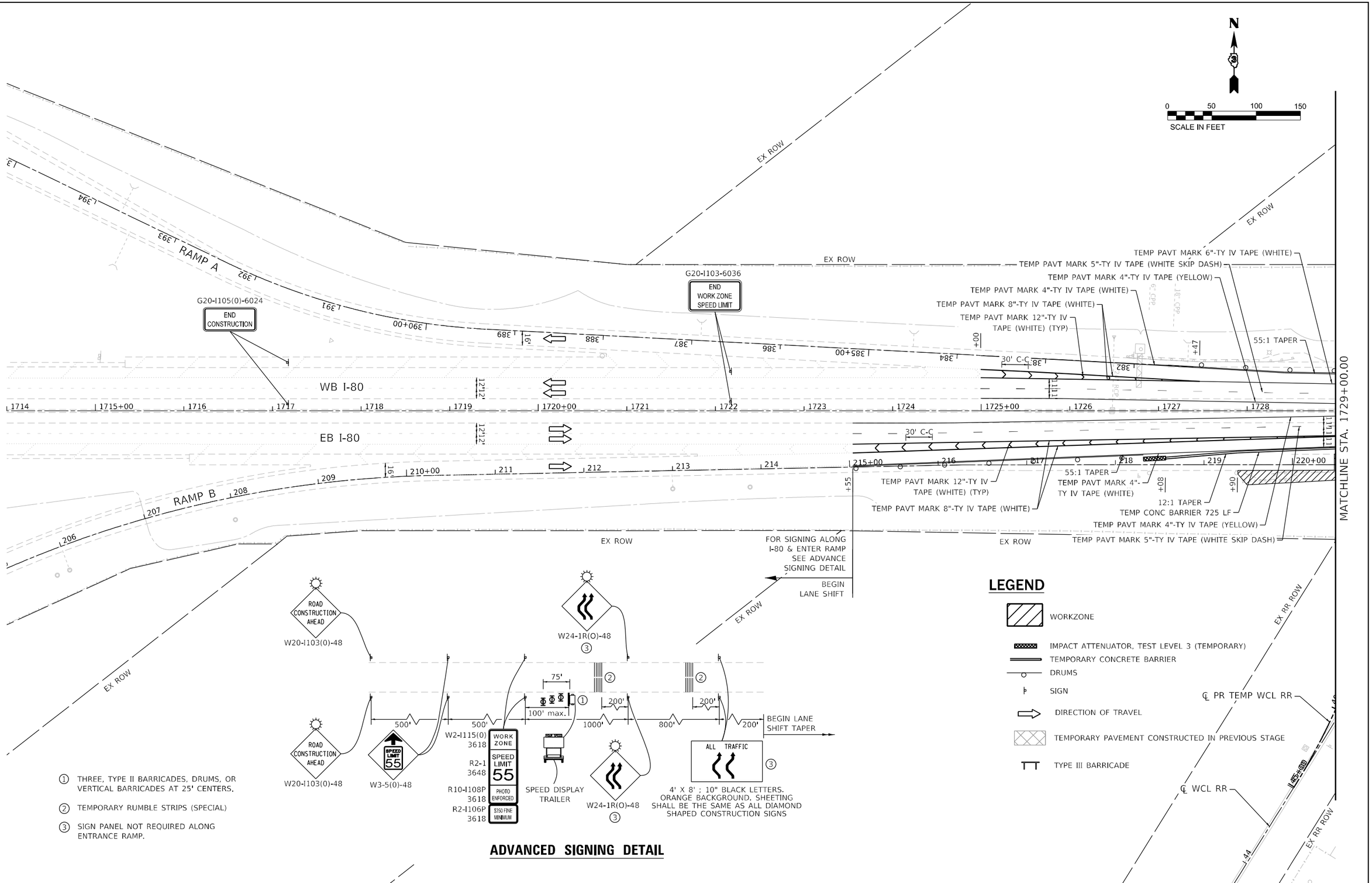

ADVANCED SIGNING DETAIL

LIN ENGINEERING,LTD. Consulting Engineers Westmont, Illinois	USER NAME = 14nho	DESIGNED - RC	REVISED -	STATE OF ILLINOIS DEPARTMENT OF TRANSPORTATION	W.C. RAILROAD OVER F.A.I. ROUTE 80 MAINTENANCE OF TRAFFIC PLAN - STAGE 3	F.A.I. RTE.	SECTION	COUNTY	TOTAL SHEETS / SHEET NO.
		DRAWN - RC	REVISED -			80	(32, 47-4)VB, HBR-3	GRUNDY/KENDALL	143 / 30
	PLOT SCALE = 100.0000 ' / in.	CHECKED - ST	REVISED -					CONTRACT NO. 66295	
	PLOT DATE = 1/9/2025	DATE - 1/2025	REVISED -		SCALE: 1"=50' SHEET 8 OF 11 SHEETS STA. 1714+00.00 TO STA. 1729+00.00			ILLINOIS FED. AID PROJECT	

LEGEND

- WORKZONE
- IMPACT ATTENUATOR, TEST LEVEL 3 (TEMPORARY)
- TEMPORARY CONCRETE BARRIER
- DRUMS
- SIGN
- DIRECTION OF TRAVEL
- TEMPORARY PAVEMENT CONSTRUCTED IN PREVIOUS STAGE
- TYPE III BARRICADE

N

0 50 100 150
SCALE IN FEET

MATCHLINE STA. 1729+00.00

EX ROW
PR TEMPORARY EASEMENT LINE
EX RR ROW
℄ PR TEMP WCL RR
℄ WCL RR
℄ WABENA RD
TEMPORARY RUNAROUND STRUCTURE (SEE STRUCTURAL PLANS)
TEMP PAVT MARK 6"-TY IV TAPE (WHITE)
55:1 TAPER
TEMP CONC BARRIER 725 LF
TEMP PAVT MARK 4"-TY IV TAPE (WHITE)
TEMP PAVT MARK 4"-TY IV TAPE (YELLOW)
TEMP PAVT MARK 5"-TY IV TAPE (WHITE SKIP DASH)
12:1 TAPER
TEMP PAVT MARK 6"-TY IV TAPE (WHITE-3' DASH, 9' SKIP)
55:1 TAPER
EX ℄ I-80
FOR SIGNING ALONG I-80 SEE ADVANCE SIGNING DETAIL
BEGIN LANE SHIFT
WB I-80
EB I-80
37" MIN CLEAR DISTANCE FROM BACK OF BARRIER TO WORK ZONE
TEMP PAVT MARK 5"-TY IV TAPE (WHITE SKIP DASH)
TEMP PAVT MARK 4"-TY IV TAPE (YELLOW)
TEMP PAVT MARK 4"-TY IV TAPE (WHITE)
TEMP CONC BARRIER 1187.5 LF
TEMP PAVT MARK 8"-TY IV TAPE (WHITE)
S.N. 032-0065 TO BE CLOSED
END WORK ZONE SPEED LIMIT
G20-I103-6036
END CONSTRUCTION
G20-I105(0)-6024
WABENA RD
SCHOOL

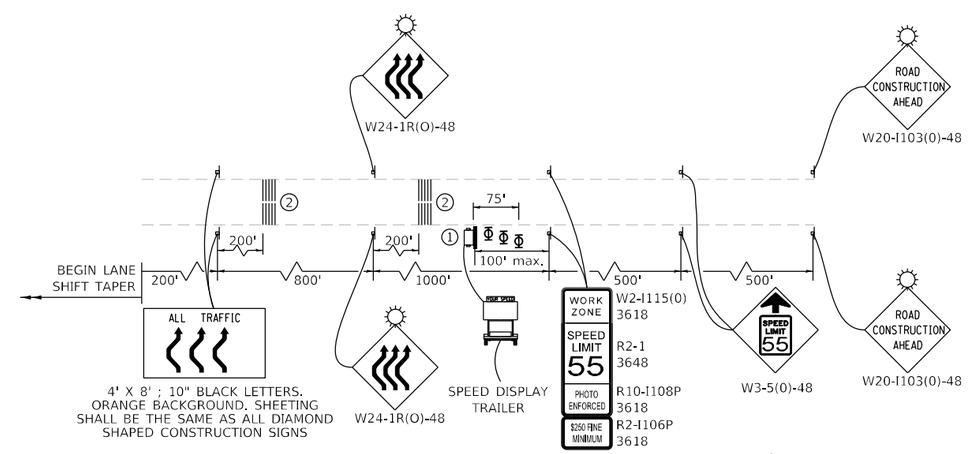

ADVANCED SIGNING DETAIL

① THREE, TYPE II BARRICADES, DRUMS, OR VERTICAL BARRICADES AT 25' CENTERS.

② TEMPORARY RUMBLE STRIPS (SPECIAL)

LIN ENGINEERING,LTD. Consulting Engineers Westmont, Illinois	USER NAME = 14nho	DESIGNED - RC	REVISED -
		DRAWN - RC	REVISED -
	PLOT SCALE = 100.0000 ' / in.	CHECKED - ST	REVISED -
	PLOT DATE = 1/9/2025	DATE - 1/2025	REVISED -

STATE OF ILLINOIS
DEPARTMENT OF TRANSPORTATION

W.C. RAILROAD OVER F.A.I. ROUTE 80
MAINTENANCE OF TRAFFIC PLAN - STAGE 3

SCALE: 1"=50' | SHEET 9 OF 11 SHEETS | STA. 1729+00.00 TO STA. 1744+00.00

F.A.I. RTE.	SECTION	COUNTY	TOTAL SHEETS	SHEET NO.
80	(32, 47-4)VB, HBR-3	GRUNDY/KENDALL	143	31
		CONTRACT NO. 66295		
		ILLINOIS FED. AID PROJECT		

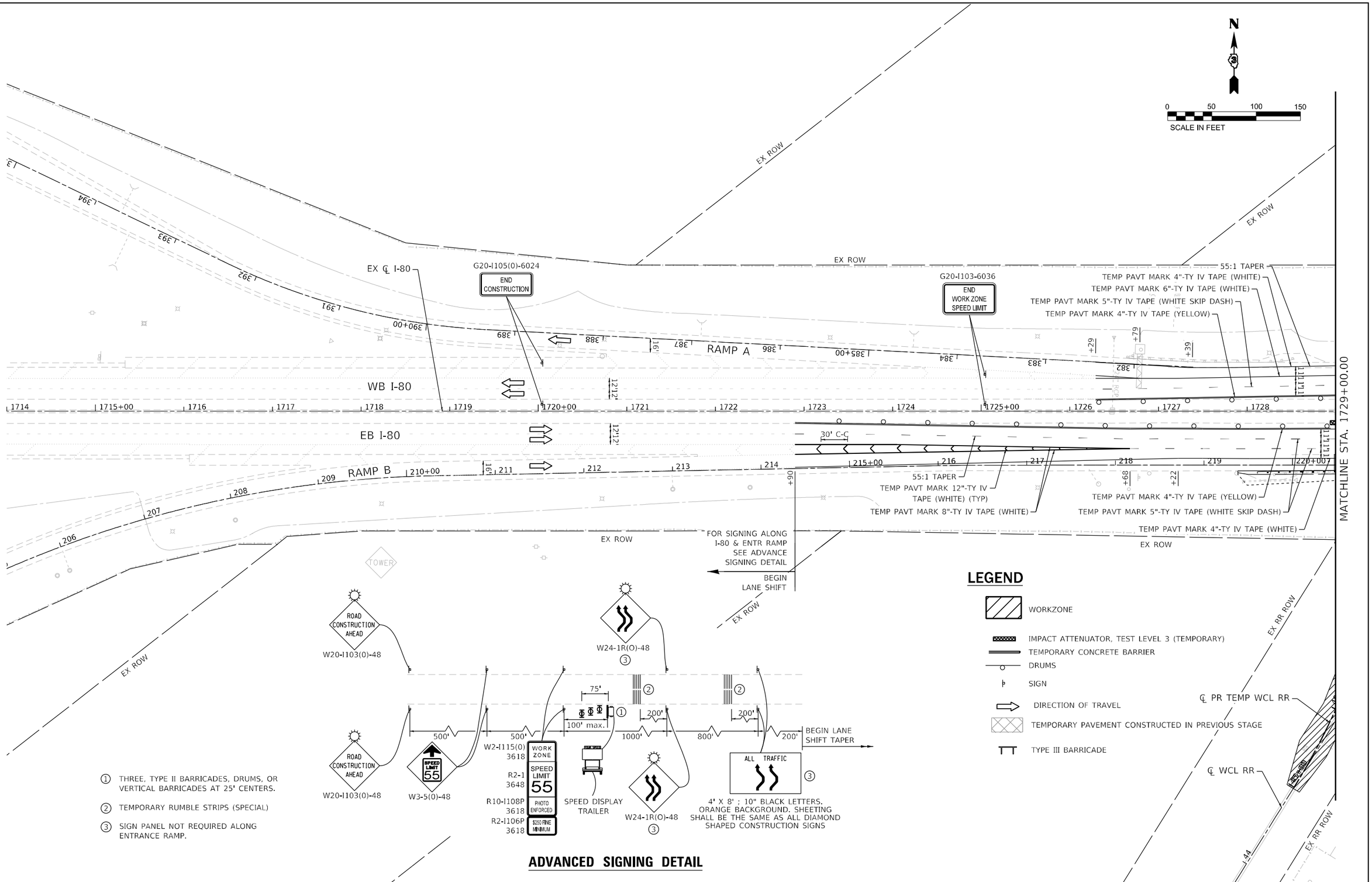

ADVANCED SIGNING DETAIL

LIN ENGINEERING,LTD. Consulting Engineers Westmont, Illinois	USER NAME = 14nha	DESIGNED - RC	REVISED -
		DRAWN - RC	REVISED -
	PLOT SCALE = 100.0000 ' / in.	CHECKED - ST	REVISED -
	PLOT DATE = 1/9/2025	DATE - 1/2025	REVISED -

STATE OF ILLINOIS
DEPARTMENT OF TRANSPORTATION

W.C. RAILROAD OVER F.A.I. ROUTE 80
MAINTENANCE OF TRAFFIC PLAN - STAGE 4

SCALE: 1"=50' | SHEET 10 OF 11 SHEETS | STA. 1714+00.00 TO STA. 1729+00.00

F.A.I. RTE.	SECTION	COUNTY	TOTAL SHEETS	SHEET NO.
80	(32, 47-4)VB, HBR-3	GRUNDY/KENDALL	143	32

CONTRACT NO. 66295

ILLINOIS | FED. AID PROJECT

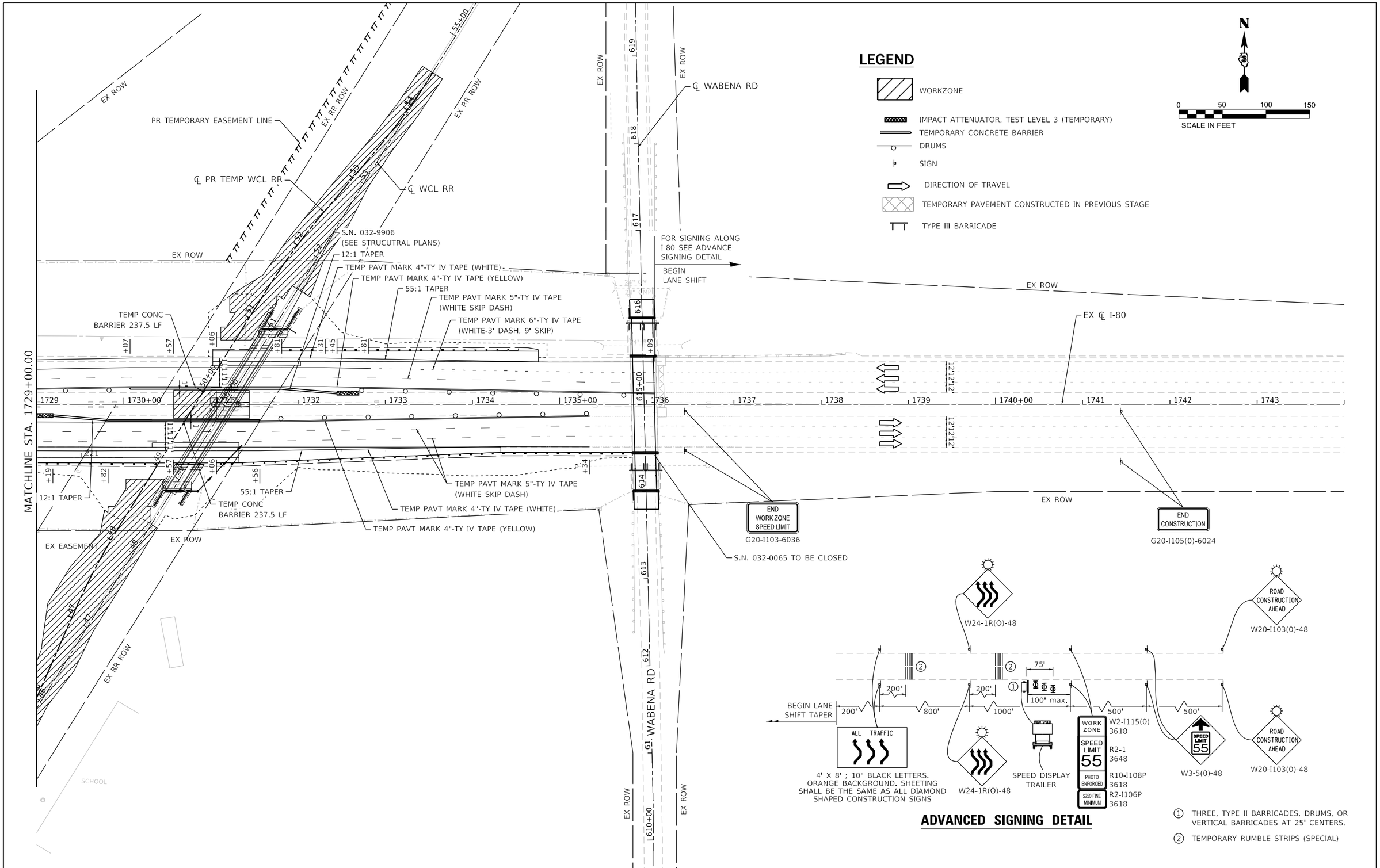

LIN ENGINEERING,LTD. Consulting Engineers Westmont, Illinois	USER NAME = 14nha	DESIGNED - RC	REVISED -
		DRAWN - RC	REVISED -
	PLOT SCALE = 100.0000 ' / in.	CHECKED - ST	REVISED -
	PLOT DATE = 1/9/2025	DATE - 1/2025	REVISED -

STATE OF ILLINOIS
DEPARTMENT OF TRANSPORTATION

W.C. RAILROAD OVER F.A.I. ROUTE 80
MAINTENANCE OF TRAFFIC PLAN - STAGE 4

SCALE: 1"=50' | SHEET 11 OF 11 SHEETS | STA. 1729+00.00 TO STA. 1744+00.00

F.A.I. RTE.	SECTION	COUNTY	TOTAL SHEETS	SHEET NO.
80	(32, 47-4)VB, HBR-3	GRUNDY/KENDALL	143	33
		CONTRACT NO. 66295		
		ILLINOIS	FED. AID PROJECT	

SIGN LEGEND

1	DETOUR M4-8 36X18 (OR)	OR	ALT M4-1a (BL) 36X18 (SEE NOTE 4)
2	EAST M3-1 (BL) 36X18		
3	WEST M3-2 (BL) 36X18	11	DETOUR AHEAD W20-2-48X48 (OR)
4	M6-2R (3021) (OR)		
5	M5-1R (3021) (OR)	12	END DETOUR M4-8a 30X15 (OR)
5A	M5-2R (3021) (OR)	13	PORTABLE CHANGEABLE MESSAGE SIGN
6	M6-1L (3021) (OR)		I-80 DETOUR ROUTE FOR 15 MIN FULL STOP CLOSURES
7	M6-1R (3021) (OR)		
8	M6-3R (3021) (OR)		
9	M6-3L (3021) (OR)		
10	INTERSTATE 80 M1-1 (BL) 36X36		

NOTES:

1) ENGINEER WILL CONFIRM THE MESSAGES ON THE PORTABLE CHANGEABLE MESSAGE SIGNS.

2) PLACE PORTABLE CHANGEABLE MESSAGE SIGNS NEAR 1/2 MILE AND 1 MILE ADVANCED I-55 SOUTH SIGN TRUSSES ALONG WB I-80 AS WELL AS THE 1/2 MILE AND 1 MILE ADVANCED I-80 WEST SIGN TRUSSES ALONG SB I-55. ALSO PLACE PCMS NEAR 1/2 MILE AND 1 MILE ADVANCED GUIDE SIGNS FOR BRISBIN RD ALONG EB I-80.

3) SIGNS BEING PLACED ON I-55 AND I-80 SHALL FOLLOW THE OVERSIZED SIZES SHOWN IN THE MUTCD.

4) WHEN I-80 TRAFFIC IS NOT DIRECTED OVER THE DETOUR ROUTE, THE CONTRACTOR SHALL FURNISH, ERECT, & MAINTAIN "ALT" SIGN PANELS (M4-1a) IN LIEU OF "DETOUR" (M4-8) SIGN PANELS ALONG THE ALTERNATE ROUTE.

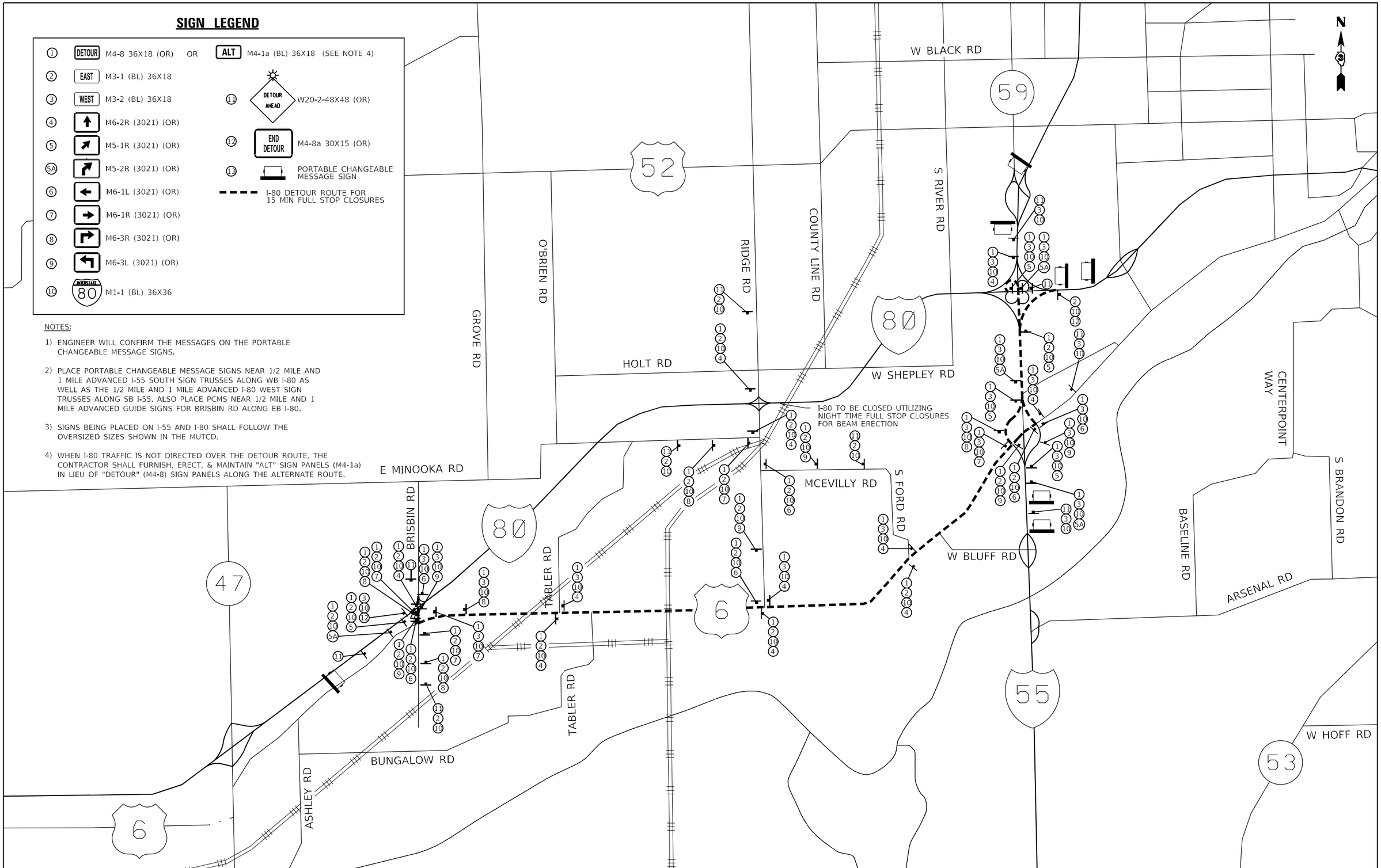

LIN ENGINEERING,LTD. Consulting Engineers Westmont, Illinois	USER NAME = rober	DESIGNED - JK	REVISED -	STATE OF ILLINOIS DEPARTMENT OF TRANSPORTATION	W.C. RAILROAD OVER F.A.I. ROUTE 80 DETOUR & ALTERNATE ROUTE PLAN	F.A.I. RTE.	SECTION	COUNTY	TOTAL SHEETS / SHEET NO.
		DRAWN - JK	REVISED -			80	(32, 47-4)VB, HBR-3	GRUNDY/KENDALL	143 / 34
	PLOT SCALE = 2.0000 ' / in.	CHECKED - ST	REVISED -					CONTRACT NO. 66295	
	PLOT DATE = 4/3/2025	DATE - 1/2025	REVISED -		SCALE: N.T.S. SHEET 1 OF 1 SHEETS STA. TO STA.			ILLINOIS FED. AID PROJECT	

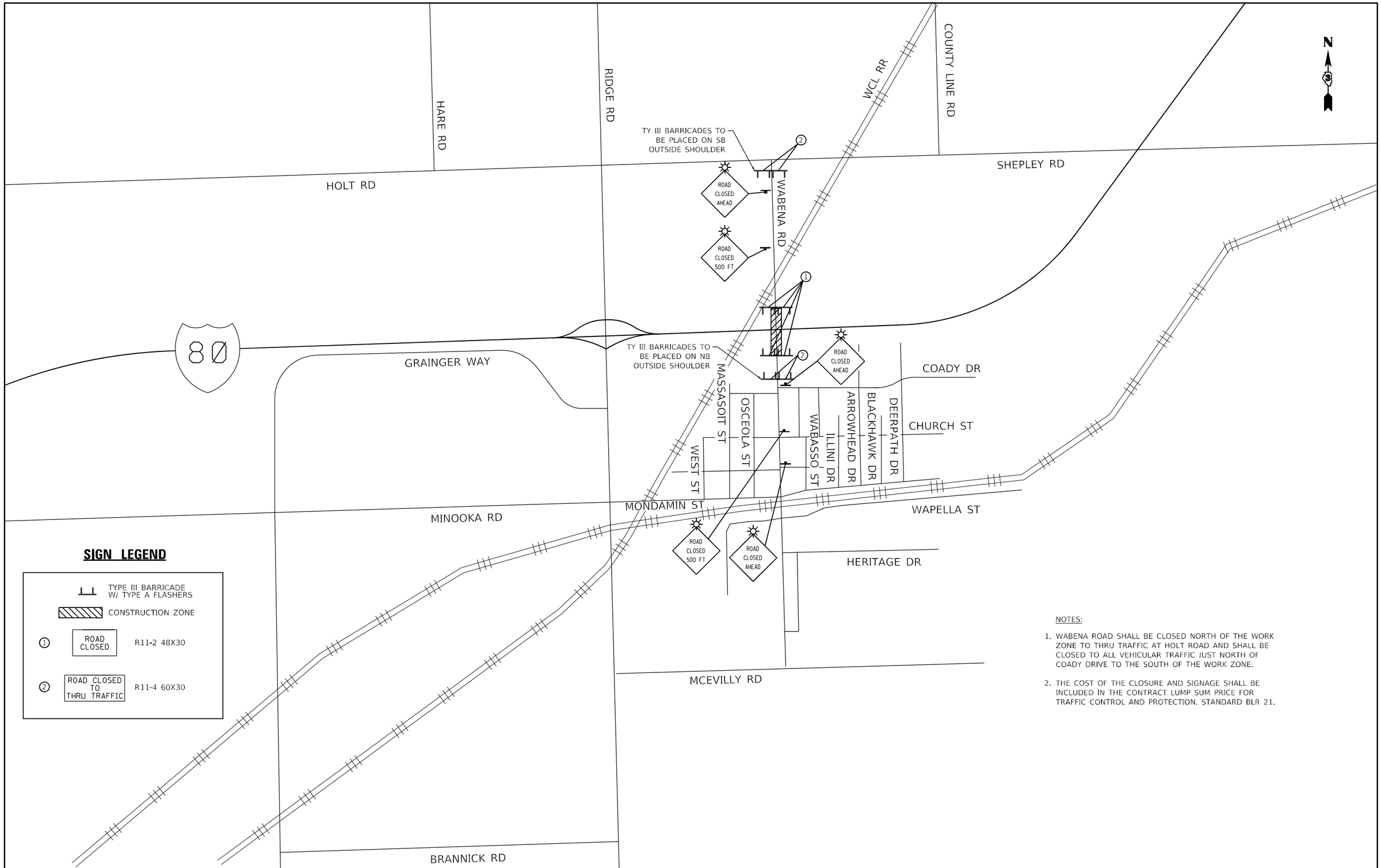

NOTES:

1. WABENA ROAD SHALL BE CLOSED NORTH OF THE WORK ZONE TO THRU TRAFFIC AT HOLT ROAD AND SHALL BE CLOSED TO ALL VEHICULAR TRAFFIC JUST NORTH OF COADY DRIVE TO THE SOUTH OF THE WORK ZONE.
2. THE COST OF THE CLOSURE AND SIGNAGE SHALL BE INCLUDED IN THE CONTRACT LUMP SUM PRICE FOR TRAFFIC CONTROL AND PROTECTION, STANDARD BLR 21.

LIN ENGINEERING,LTD. Consulting Engineers Westmont, Illinois	USER NAME = 14nha	DESIGNED - NH	REVISED -	STATE OF ILLINOIS DEPARTMENT OF TRANSPORTATION	W.C. RAILROAD OVER F.A.I. ROUTE 80 WABENA RD CLOSURE PLAN	F.A.I. RTE.	SECTION	COUNTY	TOTAL SHEETS / SHEET NO.
		DRAWN - NH	REVISED -			80	(32, 47-4)VB, HBR-3	GRUNDY/KENDALL	143 / 35
	PLOT SCALE = 2.0000 ' / in.	CHECKED - ST	REVISED -					CONTRACT NO. 66295	
	PLOT DATE = 1/9/2025	DATE - 1/2025	REVISED -		SCALE: N.T.S. SHEET 1 OF 1 SHEETS STA. TO STA.		ILLINOIS	FED. AID PROJECT	

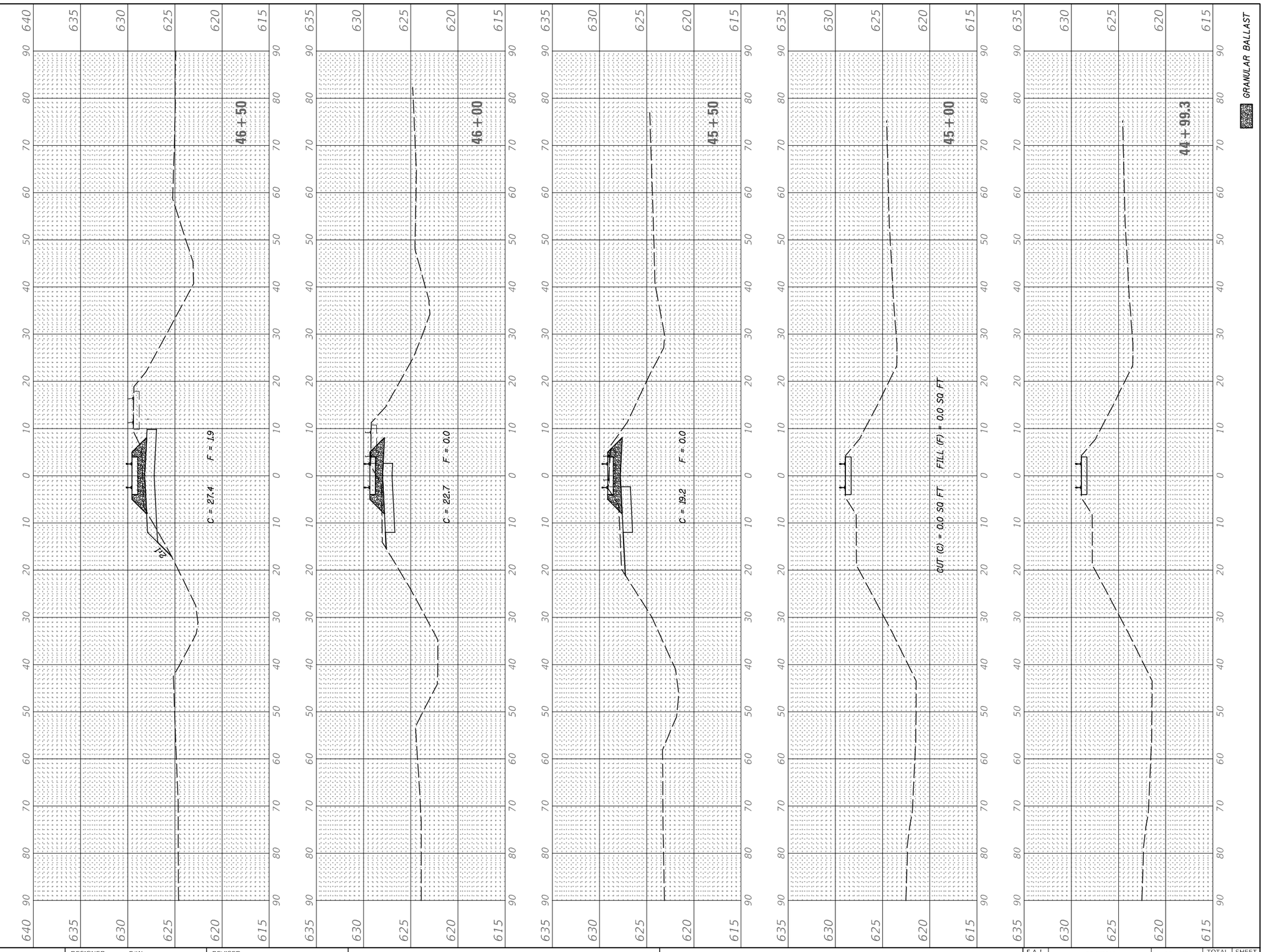

FINAL SURVEY		BY	DATE
NOTE BOOK NO.	SURVEYED		
	PLOTTED		
	TEMPLATE		
	AREAS		
	AREAS CHECKED		

ORIGINAL SURVEY		BY	DATE
NOTE BOOK NO.	SURVEYED		
	PLOTTED		
	TEMPLATE		
	AREAS		
	AREAS CHECKED		

MODEL: Revised PreFinal XSC Sheets 11-08-22
FILE NAME: V:\4389.04 CNRR over I-80\CADD\CADD Drawings\4389.04-xsc.dgn

USER NAME = BWedemeier	DESIGNED - BJW	REVISED -
	DRAWN - BJW	REVISED -
PLOT SCALE = 20.0000 ' / in.	CHECKED - WLP	REVISED -
PLOT DATE = 11/16/2023	DATE - 11/2023	REVISED -

STATE OF ILLINOIS
DEPARTMENT OF TRANSPORTATION

TEMPORARY RUNAROUND
CROSS SECTIONS

SCALE: H=10' V=5' | SHEET 1 OF 6 SHEETS | STA. 44+99.3 TO STA. 47+00

F.A.I. RTE.	SECTION	COUNTY	TOTAL SHEETS	SHEET NO.
80	(32, 47-4)VB, HBR-3	GRUNDY	143	36
		CONTRACT NO. 66295		
		ILLINOIS FED. AID PROJECT		

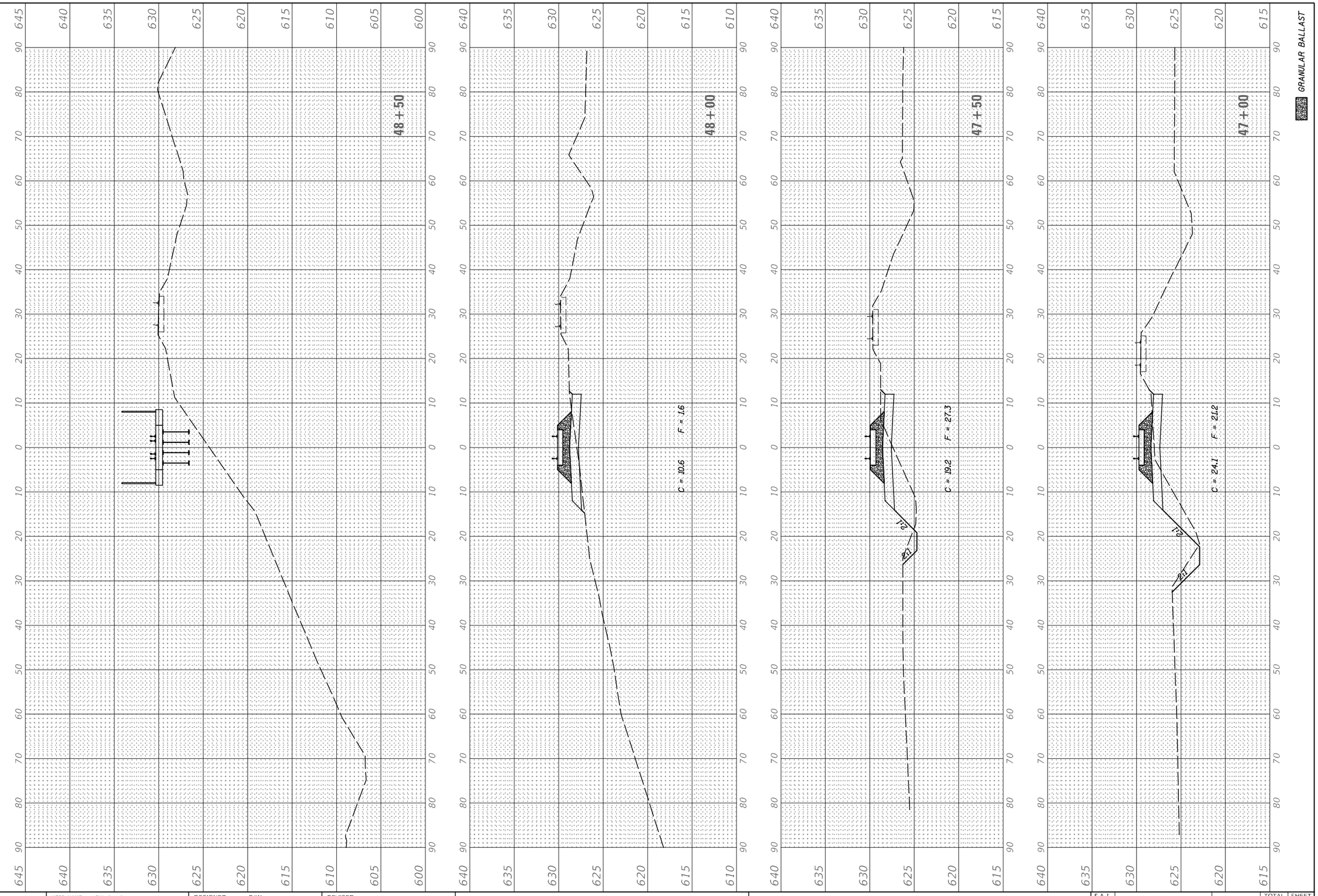

FINAL SURVEY		BY	DATE
NOTE BOOK NO.	SURVEYED		
	PLOTTED		
	TEMPLATE		
	AREAS		
	AREAS CHECKED		

ORIGINAL SURVEY		BY	DATE
NOTE BOOK NO.	SURVEYED		
	PLOTTED		
	TEMPLATE		
	AREAS		
	AREAS CHECKED		

MODEL: Revised PreFinal XSC Sheets 11-08-22
FILE NAME: V:\4389.04 CNRR over I-80\CADD\CADD Drawings\4389.04-xsc.dgn

USER NAME = BWedemeier	DESIGNED - BJW	REVISED -
	DRAWN - BJW	REVISED -
PLOT SCALE = 20.0000 ' / in.	CHECKED - WLP	REVISED -
PLOT DATE = 11/16/2023	DATE - 11/2023	REVISED -

STATE OF ILLINOIS
DEPARTMENT OF TRANSPORTATION

TEMPORARY RUNAROUND
CROSS SECTIONS

SCALE: H=10' V=5' | SHEET 2 OF 6 SHEETS | STA. 47+00 TO STA. 48+50

F.A.I. RTE.	SECTION	COUNTY	TOTAL SHEETS	SHEET NO.
80	(32, 47-4)VB, HBR-3	GRUNDY	143	37
		CONTRACT NO. 66295		
		ILLINOIS FED. AID PROJECT		

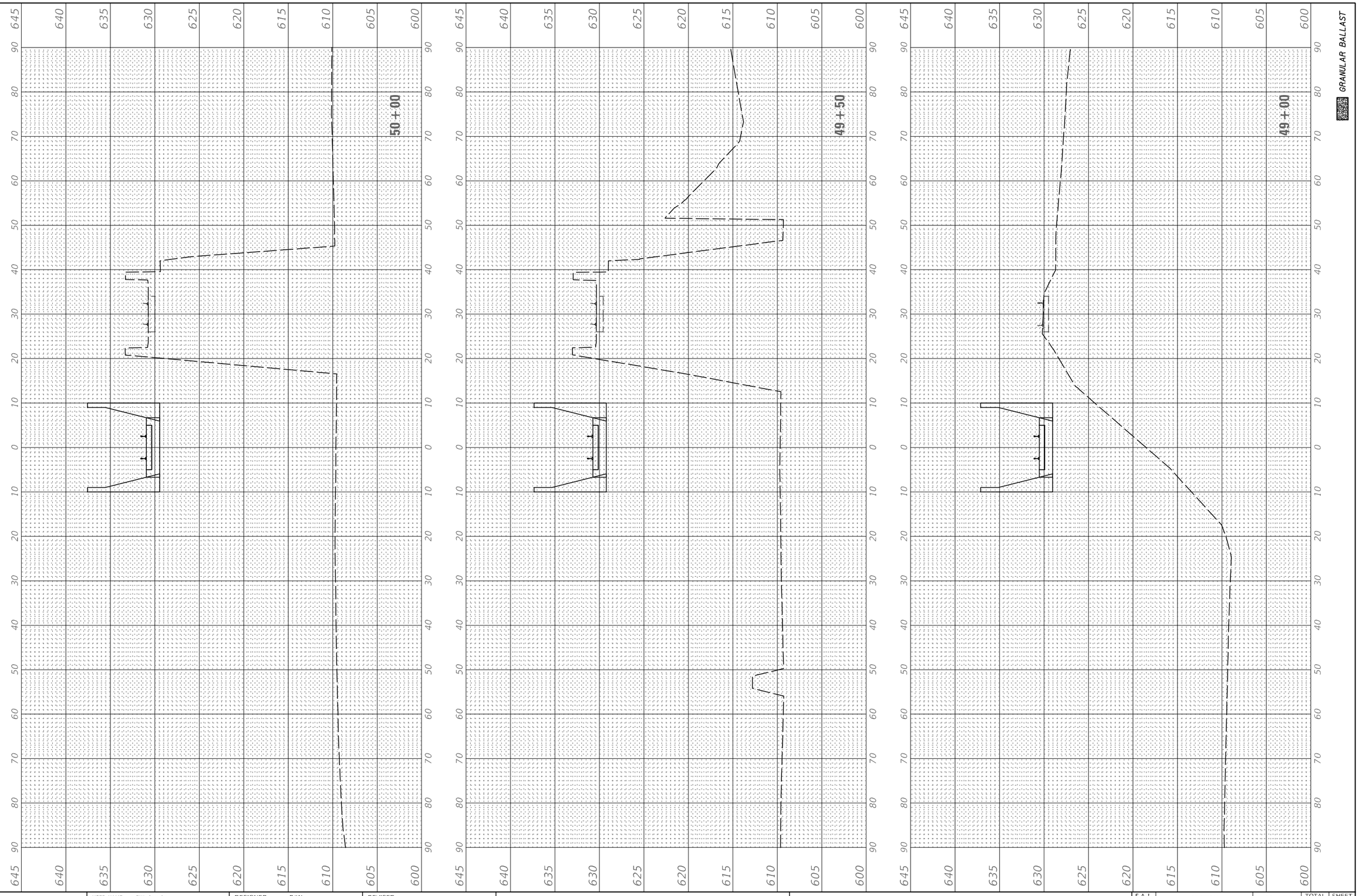

FINAL SURVEY		BY	DATE
NOTE BOOK NO.	SURVEYED		
	PLOTTED		
	TEMPLATE		
	AREAS		
	AREAS CHECKED		

ORIGINAL SURVEY		BY	DATE
NOTE BOOK NO.	SURVEYED		
	PLOTTED		
	TEMPLATE		
	AREAS		
	AREAS CHECKED		

MODEL: Revised PreFinal XSC Sheets 11-08-22
FILE NAME: V:\4389.04 CNRR over I-80\CADD\CADD Drawings\4389.04-xsc.dgn

USER NAME = BWedemeier	DESIGNED - BJW	REVISED -	
	DRAWN - BJW	REVISED -	
PLOT SCALE = 20.0000 ' / in.	CHECKED - WLP	REVISED -	
PLOT DATE = 11/16/2023	DATE - 11/2023	REVISED -	

STATE OF ILLINOIS
DEPARTMENT OF TRANSPORTATION

TEMPORARY RUNAROUND
CROSS SECTIONS

SCALE: H=10' V=5' | SHEET 3 OF 6 SHEETS | STA. 49+00 TO STA. 50+00

F.A.I. RTE.	SECTION	COUNTY	TOTAL SHEETS	SHEET NO.
80	(32, 47-4)VB, HBR-3	GRUNDY	143	38
		CONTRACT NO. 66295		
		ILLINOIS	FED. AID PROJECT	

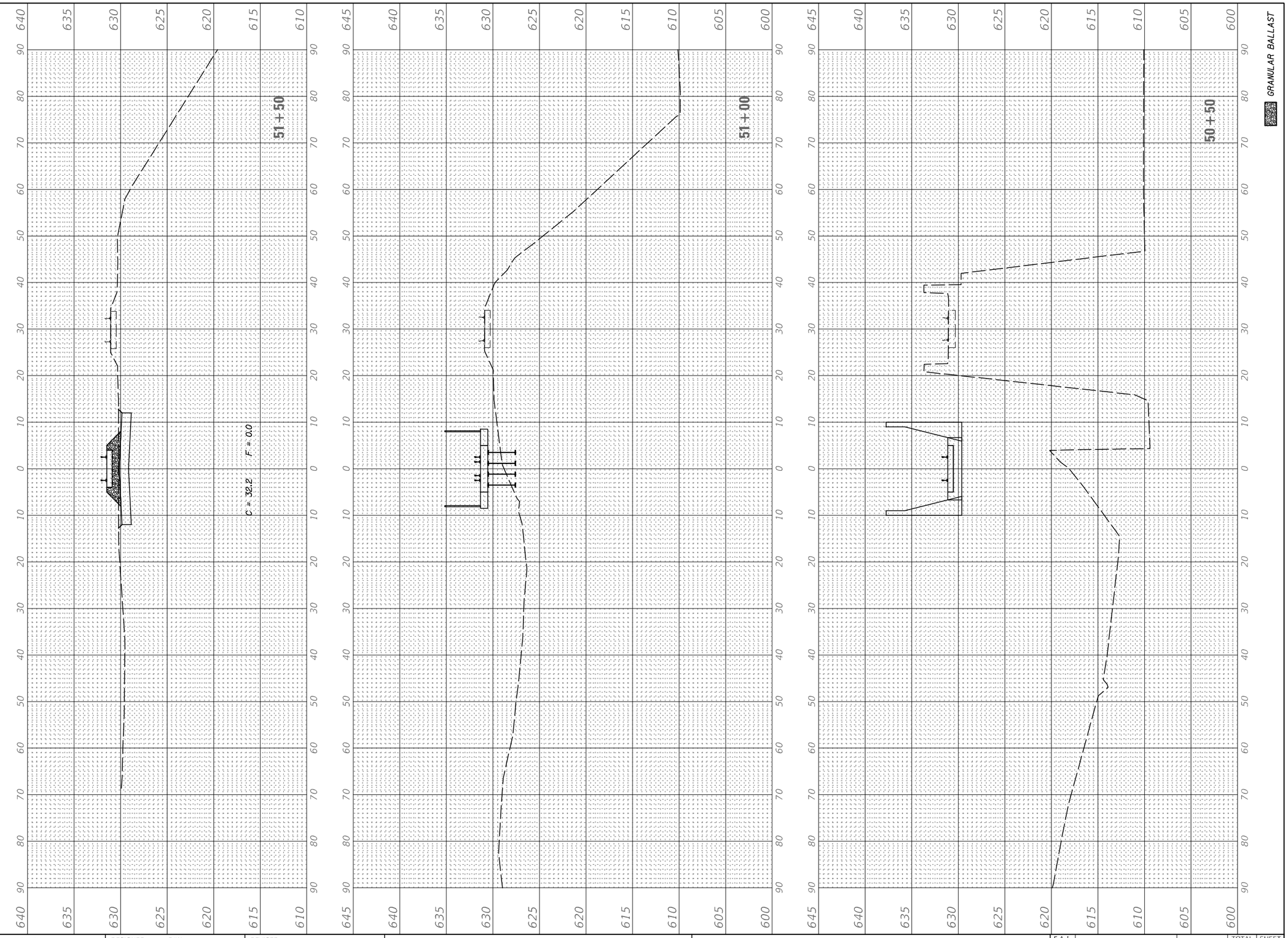

FINAL SURVEY		BY	DATE
NOTE BOOK NO.	SURVEYED		
	PLOTTED		
	TEMPLATE		
	AREAS		
	AREAS CHECKED		

ORIGINAL SURVEY		BY	DATE
NOTE BOOK NO.	SURVEYED		
	PLOTTED		
	TEMPLATE		
	AREAS		
	AREAS CHECKED		

MODEL: Revised PreFinal XSC Sheets 11-08-22
FILE NAME: V:\389.04 CNRR over I-80\CADD\CADD Drawings\389.04-xsc.dgn

USER NAME = BWedemeier	DESIGNED - BJW	REVISED -
	DRAWN - BJW	REVISED -
PLOT SCALE = 20.0000 ' / in.	CHECKED - WLP	REVISED -
PLOT DATE = 11/16/2023	DATE - 11/2023	REVISED -

STATE OF ILLINOIS
DEPARTMENT OF TRANSPORTATION

TEMPORARY RUNAROUND
CROSS SECTIONS

SCALE: H=10' V=5' | SHEET 4 OF 6 SHEETS | STA. 50+50 TO STA. 51+50

F.A.I. RTE.	SECTION	COUNTY	TOTAL SHEETS	SHEET NO.
80	(32, 47-4)VB, HBR-3	GRUNDY	143	39
		CONTRACT NO. 66295		
		ILLINOIS	FED. AID PROJECT	

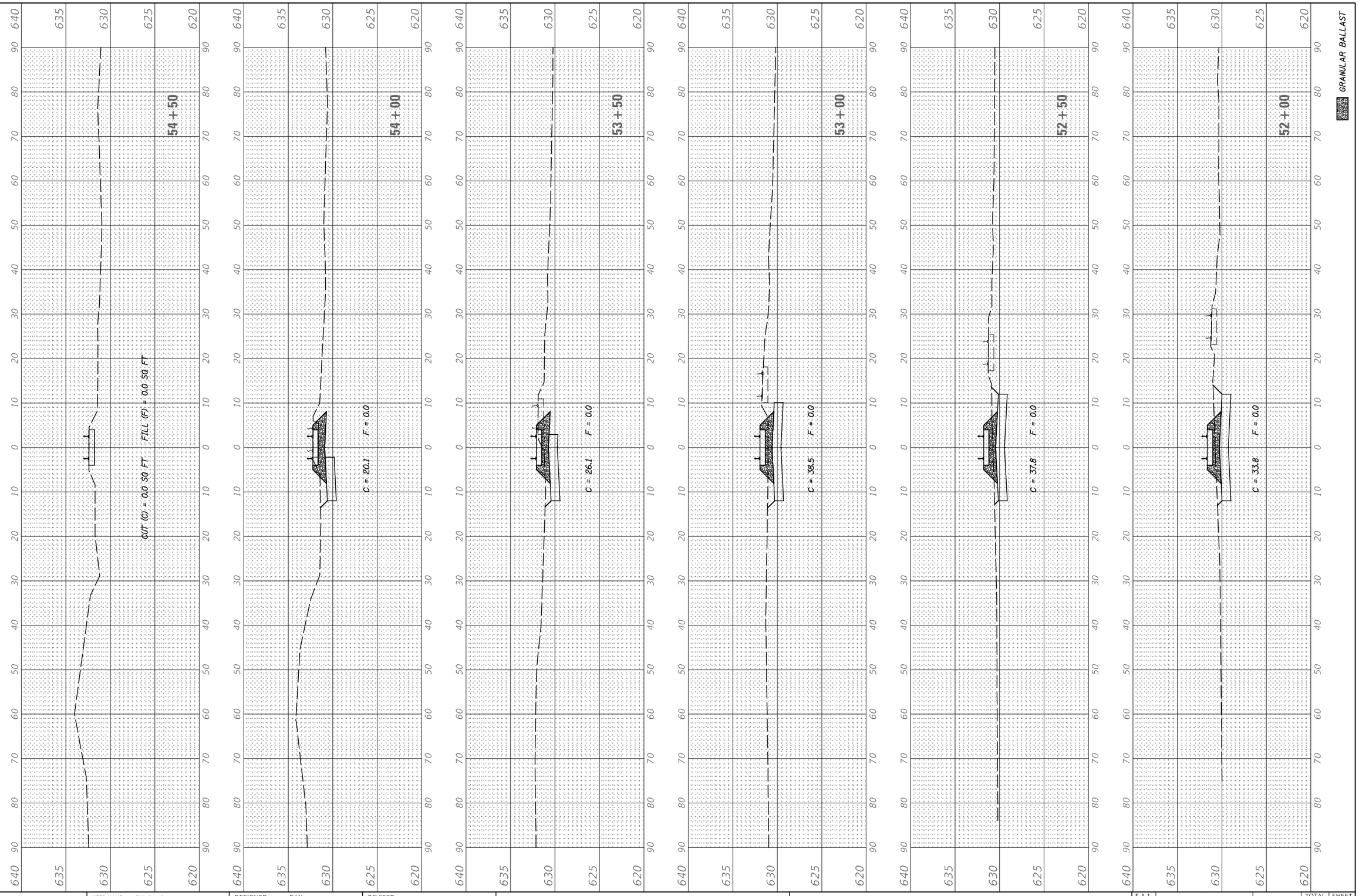

FINAL SURVEY		BY	DATE
NOTE BOOK NO.	SURVEYED		
	PLOTTED		
	TEMPLATE		
	AREAS		
	AREAS CHECKED		

ORIGINAL SURVEY		BY	DATE
NOTE BOOK NO.	SURVEYED		
	PLOTTED		
	TEMPLATE		
	AREAS		
	AREAS CHECKED		

MODEL: Revised PreFinal XSC Sheets 11-08-22
FILE NAME: V:\4389.04 CNRR over I-80\CADD\CADD Drawings\4389.04-xsc.dgn

USER NAME = BWedemeier	DESIGNED - BJW	REVISED -	
	DRAWN - BJW	REVISED -	
PLOT SCALE = 20.0000 ' / in.	CHECKED - WLP	REVISED -	
PLOT DATE = 11/16/2023	DATE - 11/2023	REVISED -	

STATE OF ILLINOIS
DEPARTMENT OF TRANSPORTATION

TEMPORARY RUNAROUND
CROSS SECTIONS

SCALE: H=10' V=5' | SHEET 5 OF 6 SHEETS | STA. 52+00 TO STA. 54+50

F.A.I. RTE.	SECTION	COUNTY	TOTAL SHEETS	SHEET NO.
80	(32, 47-4)VB, HBR-3	GRUNDY	143	40
		CONTRACT NO. 66295		
		ILLINOIS	FED. AID PROJECT	

FINAL SURVEY		BY	DATE
NOTE BOOK NO.	SURVEYED		
	PLOTTED		
	TEMPLATE		
	AREAS		
	AREAS CHECKED		

ORIGINAL SURVEY		BY	DATE
NOTE BOOK NO.	SURVEYED		
	PLOTTED		
	TEMPLATE		
	AREAS		
	AREAS CHECKED		

MODEL: Revised PreFinal XSC Sheets 11-08-22
FILE NAME: V:\4389.04 CNRR over I-30\CADD\CADD Drawings\4389_04-xsc.dgn

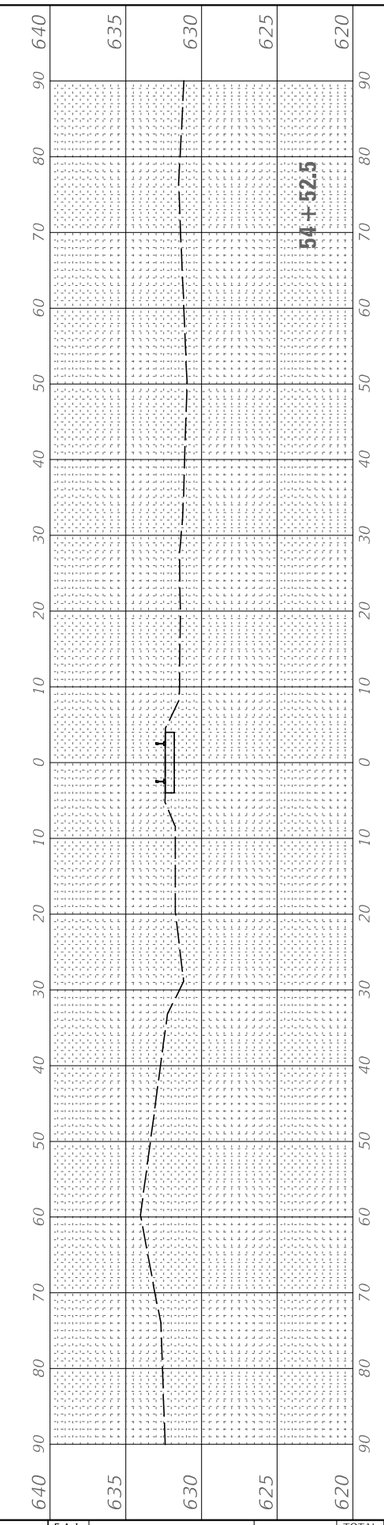

USER NAME = BWedemeier	DESIGNED - BJW	REVISED -
	DRAWN - BJW	REVISED -
PLOT SCALE = 20.0000 ' / in.	CHECKED - WLP	REVISED -
PLOT DATE = 11/16/2023	DATE - 11/2023	REVISED -

STATE OF ILLINOIS
DEPARTMENT OF TRANSPORTATION

TEMPORARY RUNAROUND
CROSS SECTIONS

SCALE: H=10' V=5' | SHEET 6 OF 6 SHEETS | STA.

F.A.I. RTE.	SECTION	COUNTY	TOTAL SHEETS	SHEET NO.
80	(32, 47-4)VB, HBR-3	GRUNDY	143	41
		CONTRACT NO. 66295		
		ILLINOIS	FED. AID PROJECT	

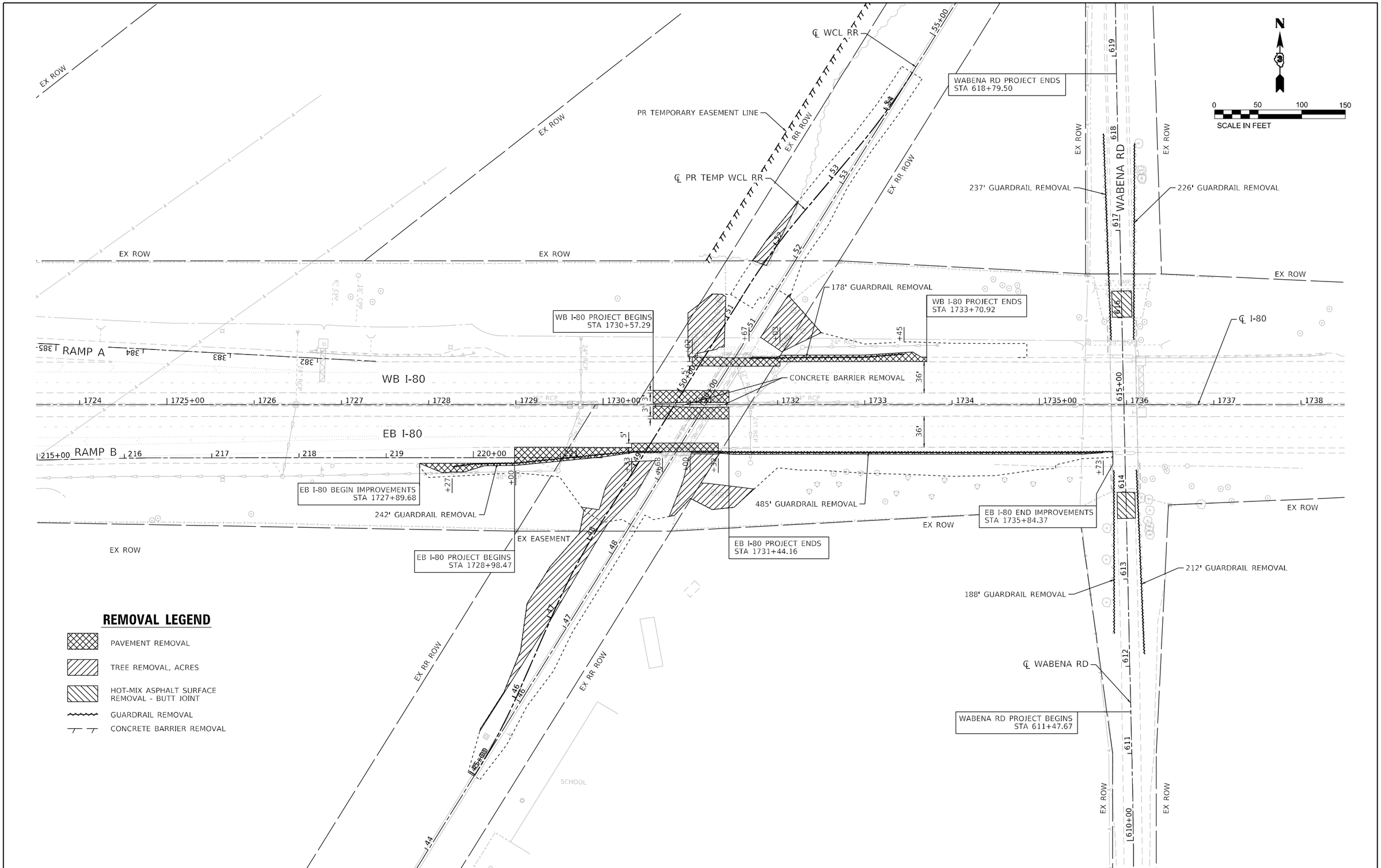

LIN ENGINEERING,LTD. Consulting Engineers Westmont, Illinois	USER NAME = 14nha	DESIGNED - RC	REVISED -
		DRAWN - RC	REVISED -
	PLOT SCALE = 100.0000 ' / in.	CHECKED - ST	REVISED -
	PLOT DATE = 1/9/2025	DATE - 1/2025	REVISED -

STATE OF ILLINOIS
DEPARTMENT OF TRANSPORTATION

W.C. RAILROAD OVER F.A.I. ROUTE 80
REMOVAL PLAN

SCALE: 1"=50' | SHEET 1 OF 1 SHEETS | STA. 1723+50.00 TO STA. 1738+50.00

F.A.I. RTE.	SECTION	COUNTY	TOTAL SHEETS	SHEET NO.
80	(32, 47-4)VB, HBR-3	GRUNDY/KENDALL	143	42
		CONTRACT NO. 66295		
		ILLINOIS FED. AID PROJECT		

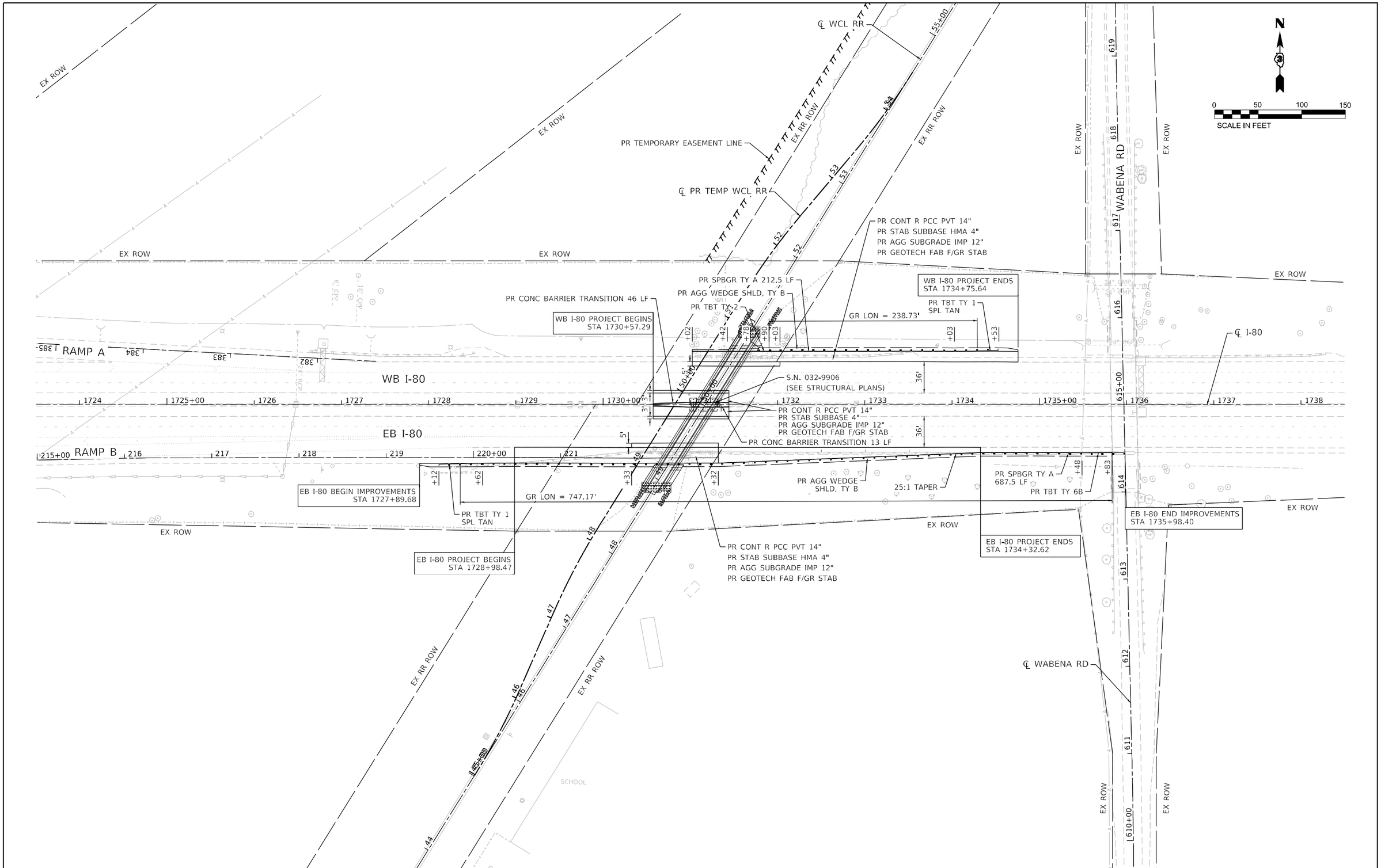

LIN ENGINEERING,LTD. Consulting Engineers Westmont, Illinois	USER NAME = 14nho	DESIGNED - RC	REVISED -	STATE OF ILLINOIS DEPARTMENT OF TRANSPORTATION	W.C. RAILROAD OVER F.A.I. ROUTE 80 ROADWAY PLAN
		DRAWN - RC	REVISED -		
	PLOT SCALE = 100.0000 ' / in.	CHECKED - ST	REVISED -		
	PLOT DATE = 1/9/2025	DATE - 1/2025	REVISED -		SCALE: 1"=50' SHEET 1 OF 1 SHEETS STA. 1723+50.00 TO STA. 1738+50.00

F.A.I. RTE.	SECTION	COUNTY	TOTAL SHEETS	SHEET NO.
80	(32, 47-4)VB, HBR-3	GRUNDY/KENDALL	143	43
		CONTRACT NO. 66295		
		ILLINOIS FED. AID PROJECT		

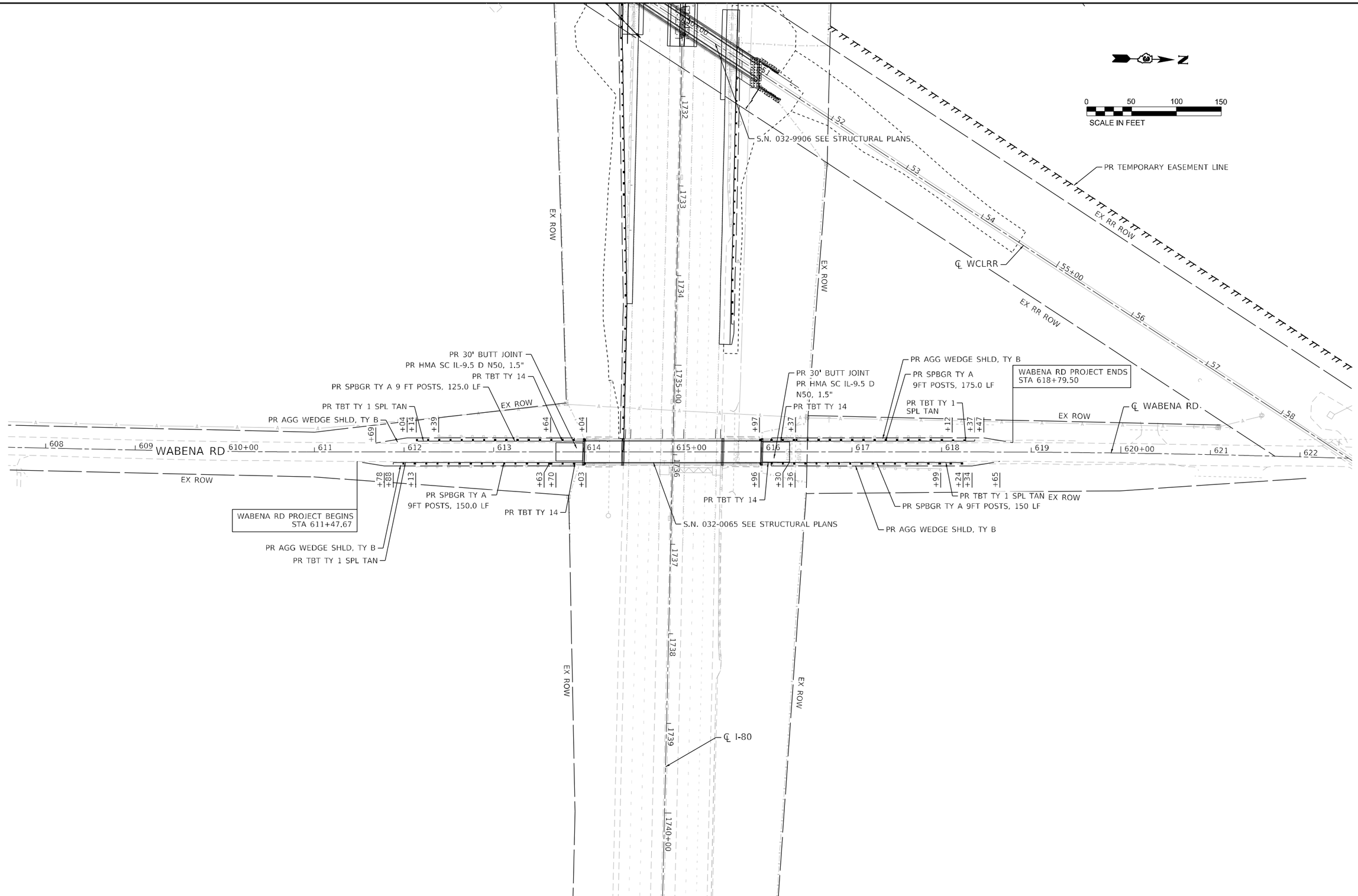

LIN ENGINEERING,LTD. Consulting Engineers Westmont, Illinois	USER NAME = 14nha	DESIGNED - NH	REVISED -	STATE OF ILLINOIS DEPARTMENT OF TRANSPORTATION	W.C. RAILROAD OVER F.A.I. ROUTE 80 WABENA RD ROADWAY PLAN
		DRAWN - NH	REVISED -		
	PLOT SCALE = 100.0000 ' / in.	CHECKED - ST	REVISED -		
	PLOT DATE = 1/9/2025	DATE - 1/2025	REVISED -		SCALE: 1"=50' SHEET 1 OF 1 SHEETS STA. 611+47.67 TO STA. 618+79.50

F.A.I. RTE.	SECTION	COUNTY	TOTAL SHEETS	SHEET NO.
80	(32, 47-4)VB, HBR-3	GRUNDY/KENDALL	143	44
		CONTRACT NO. 66295		
		ILLINOIS FED. AID PROJECT		

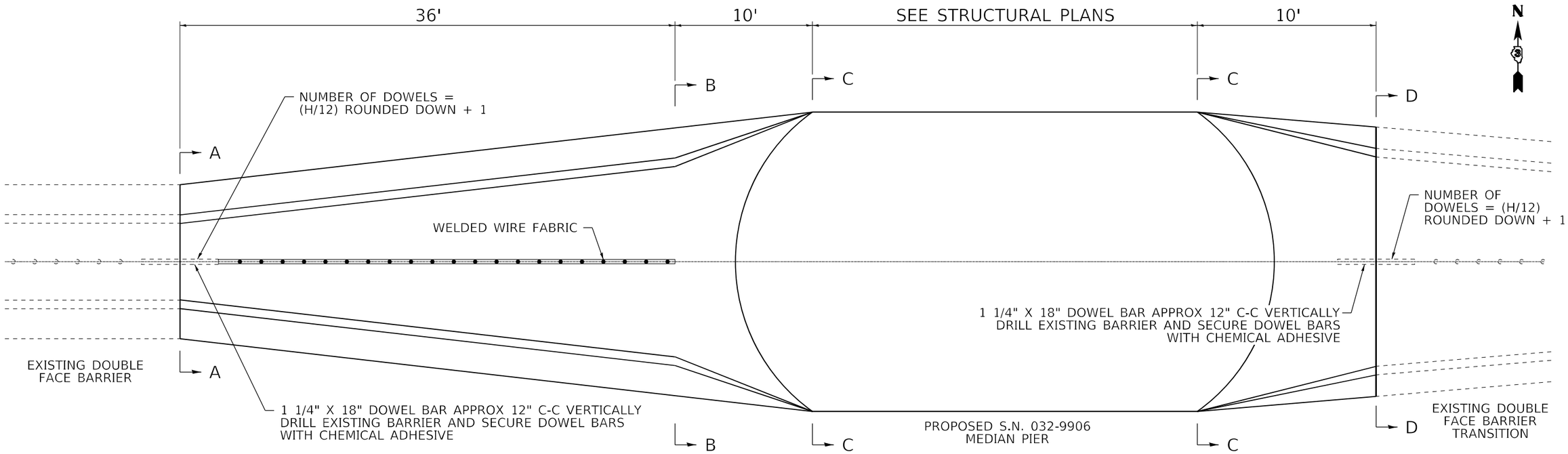

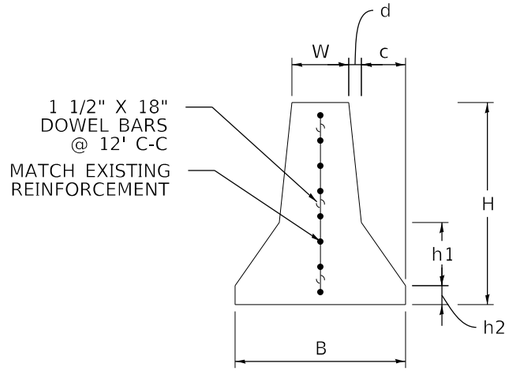

SECTION A-A
(CONSTRUCTION JOINT)

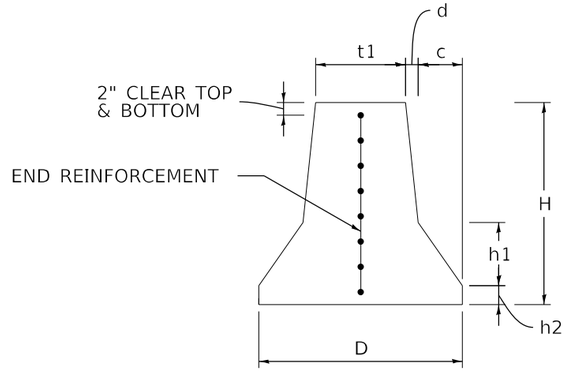

SECTION B-B

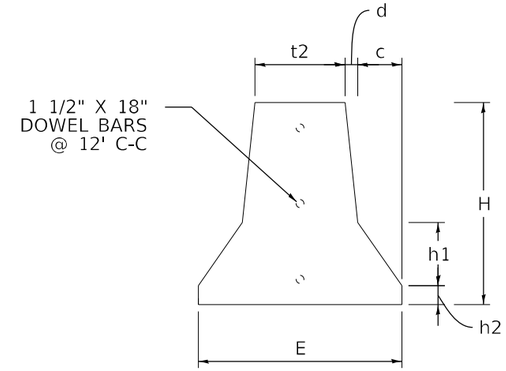

SECTION C-C

LIMITS OF PR CONC BARRIER TRANSITION
STA 1730+57.29 TO STA 1731+44.16

TRANSITION FROM EXISTING DOUBLE FACE BARRIER TO PROPOSED S.N. 032-9906 MEDIAN PIER

NOTES:

CONTRACTOR TO VERIFY HEIGHT AND WIDTH OF EX MEDIAN CONC BARRIER AT REMOVAL LIMITS PRIOR TO BEGINNING ANY WORK.

THIS WORK WILL BE PAID FOR AT THE CONTRACT UNIT PRICE PER FOOT FOR CONCRETE BARRIER TRANSITION.

FOUNDATION ANCHORING SHALL BE ACCORDING TO HIGHWAY STANDARD 637006. THIS WORK WILL NOT BE PAID FOR SEPARATELY BUT INCLUDED IN THE CONTRACT UNIT PRICE PER FOOT FOR CONCRETE BARRIER TRANSITION.

LIN ENGINEERING,LTD. Consulting Engineers Westmont, Illinois	USER NAME = 14nho	DESIGNED - RC	REVISED -
		DRAWN - RC	REVISED -
	PLOT SCALE = 2.0000 ' / in.	CHECKED - ST	REVISED -
	PLOT DATE = 1/9/2025	DATE - 1/2025	REVISED -

STATE OF ILLINOIS
DEPARTMENT OF TRANSPORTATION

W.C. RAILROAD OVER F.A.I. ROUTE 80
CONCRETE BARRIER TRANSITION DETAIL

SCALE: N.T.S. | SHEET 1 OF 1 SHEETS | STA. TO STA.

F.A.I. RTE.	SECTION	COUNTY	TOTAL SHEETS	SHEET NO.
80	(32, 47-4)VB, HBR-3	GRUNDY/KENDALL	143	45
		CONTRACT NO. 66295		
		ILLINOIS FED. AID PROJECT		

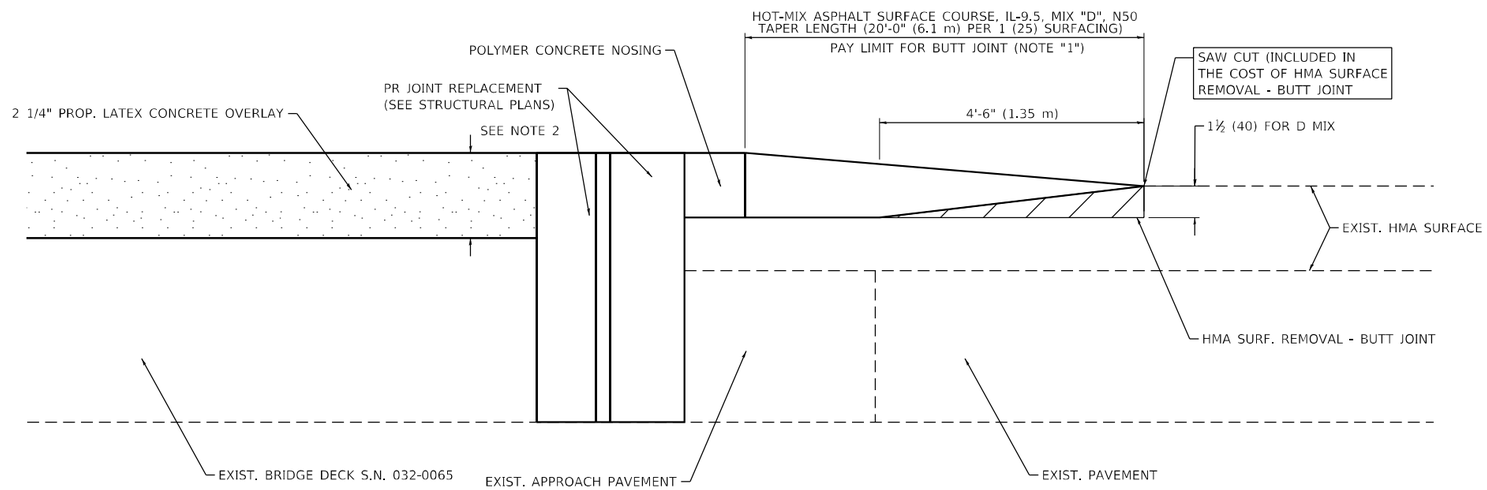

BUTT JOINT AND HMA TAPER FOR SCARIFICATION AND RESURFACING

NOTES:

1. THE BUTT JOINT SHALL BE CONSTRUCTED IMMEDIATELY PRIOR TO PLACING THE PROPOSED HMA COURSES.
2. SEE BRIDGE PLANS FOR SCARIFICATION THICKNESS.
3. SEE ARTICLE 406.08 AND 406.14 OF THE STANDARD SPECIFICATIONS FOR "HMA AND/OR PCC SURFACE REMOVAL, BUTT JOINT".

ALL DIMENSIONS ARE IN INCHES (MILLIMETERS) UNLESS OTHERWISE SHOWN.

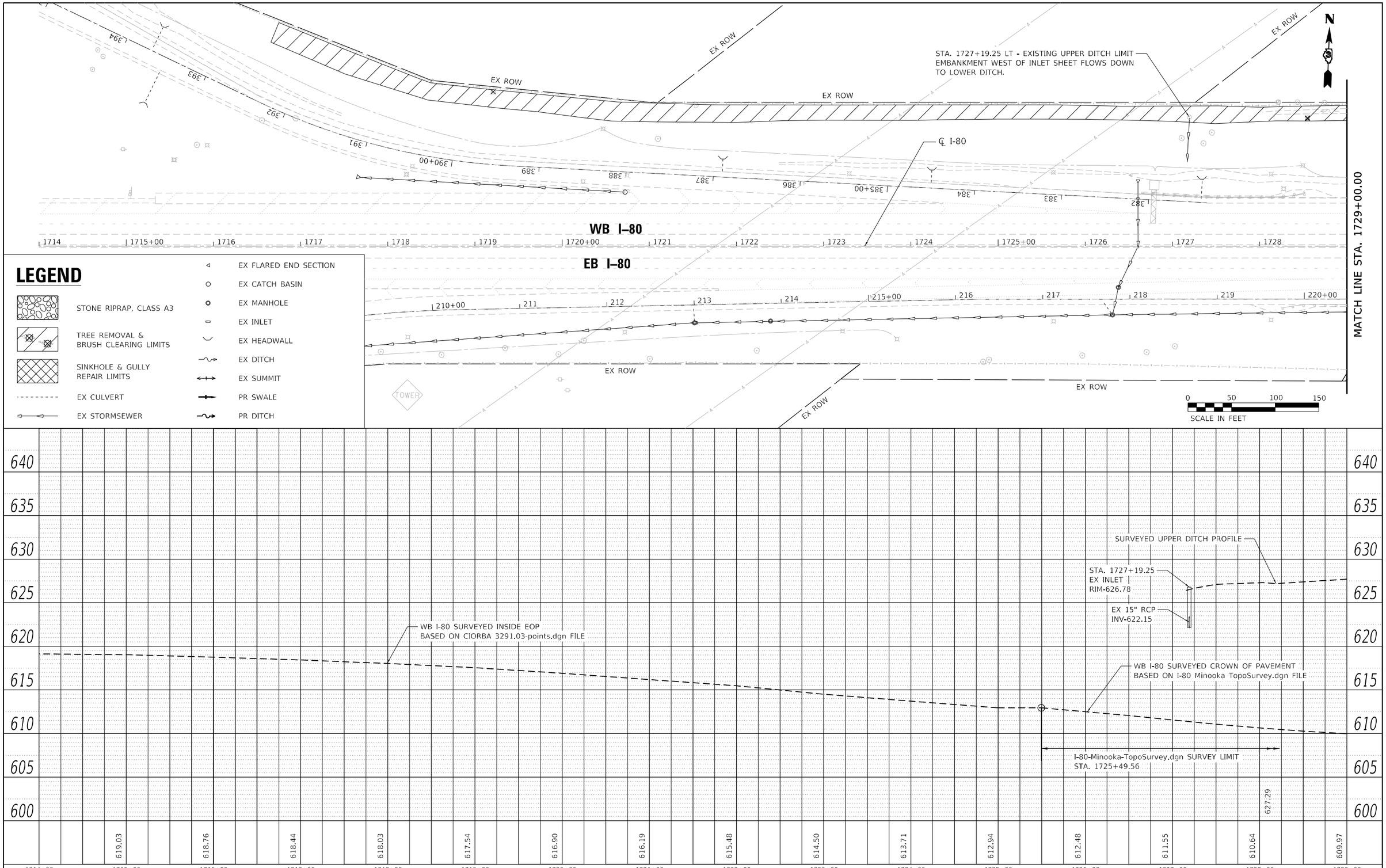

LIN ENGINEERING,LTD. Consulting Engineers Westmont, Illinois	USER NAME = LIN04-PC	DESIGNED - LM	REVISED -
		DRAWN - LM	REVISED -
	PLOT SCALE = 100.0000 ' / in.	CHECKED - SGL	REVISED -
	PLOT DATE = 1/9/2025	DATE - 1/2025	REVISED -

STATE OF ILLINOIS
DEPARTMENT OF TRANSPORTATION

I-80 AND WABENA AVENUE
SINKHOLE REPAIR & UPPER DITCH REGRADING PLAN AND PROFILE

SCALE: 1:50H 1:5V | SHEET 1 OF 3 SHEETS | STA. 1714+00.00 TO STA. 1729+00.00

F.A.I. RTE.	SECTION	COUNTY	TOTAL SHEETS	SHEET NO.
80	(32, 47-4)VB, HBR-3	KENDALL	143	47
		CONTRACT NO. 66295		
		ILLINOIS	FED. AID PROJECT	

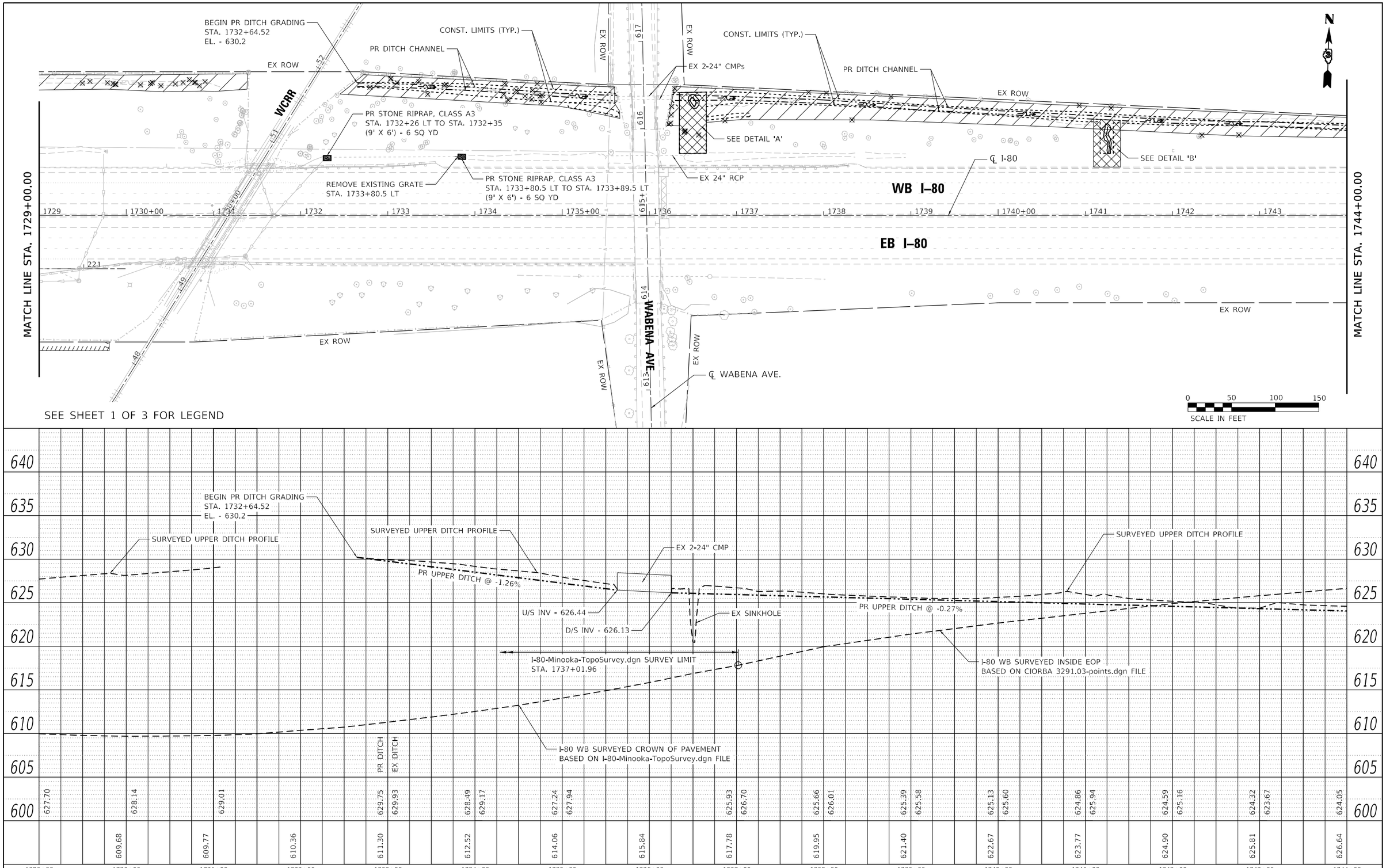

LIN ENGINEERING,LTD. Consulting Engineers Westmont, Illinois	USER NAME = LIN04-PC	DESIGNED - LM	REVISED -
		DRAWN - LM	REVISED -
	PLOT SCALE = 100.0000 ' / in.	CHECKED - SGL	REVISED -
	PLOT DATE = 1/9/2025	DATE - 1/2025	REVISED -

STATE OF ILLINOIS
DEPARTMENT OF TRANSPORTATION

I–80 AND WABENA AVENUE
SINKHOLE REPAIR & UPPER DITCH REGRADING PLAN AND PROFILE

SCALE: 1:50H 1:5V | SHEET 2 OF 3 SHEETS | STA. 1729+00.00 TO STA. 1744+00.00

F.A.I. RTE.	SECTION	COUNTY	TOTAL SHEETS	SHEET NO.
80	(32, 47-4)VB, HBR-3	KENDALL	143	48

CONTRACT NO. 66295

ILLINOIS | FED. AID PROJECT

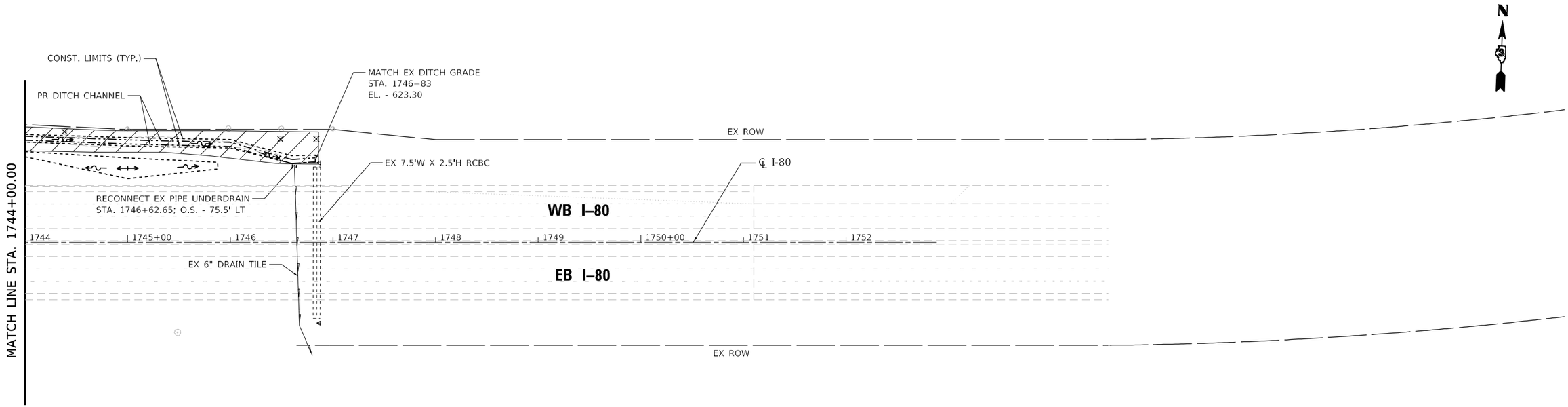

SEE SHEET 1 OF 3 FOR LEGEND

0 50 100 150
SCALE IN FEET

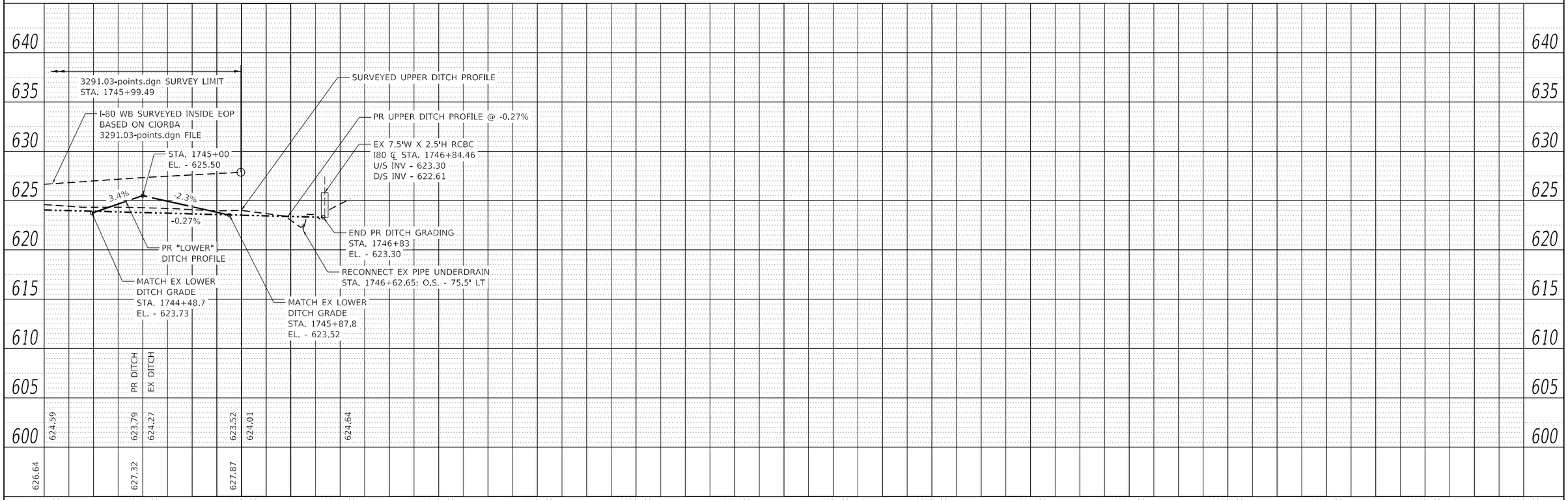

LIN ENGINEERING,LTD. Consulting Engineers Westmont, Illinois	USER NAME = LIN04-PC	DESIGNED - LM	REVISED -	STATE OF ILLINOIS DEPARTMENT OF TRANSPORTATION
		DRAWN - LM	REVISED -	
	PLOT SCALE = 100.0000 ' / in.	CHECKED - SGL	REVISED -	
	PLOT DATE = 1/9/2025	DATE - 1/2025	REVISED -	

I–80 AND WABENA AVENUE
SINKHOLE REPAIR & UPPER DITCH REGRADING PLAN AND PROFILE

SCALE: 1:50H 1:5V | SHEET 3 OF 3 SHEETS | STA. 1744+00.00 TO STA. 1752+88.29

F.A.I. RTE.	SECTION	COUNTY	TOTAL SHEETS	SHEET NO.
80	(32, 47-4)VB, HBR-3	KENDALL	143	49
		CONTRACT NO. 66295		
		ILLINOIS	FED. AID PROJECT	

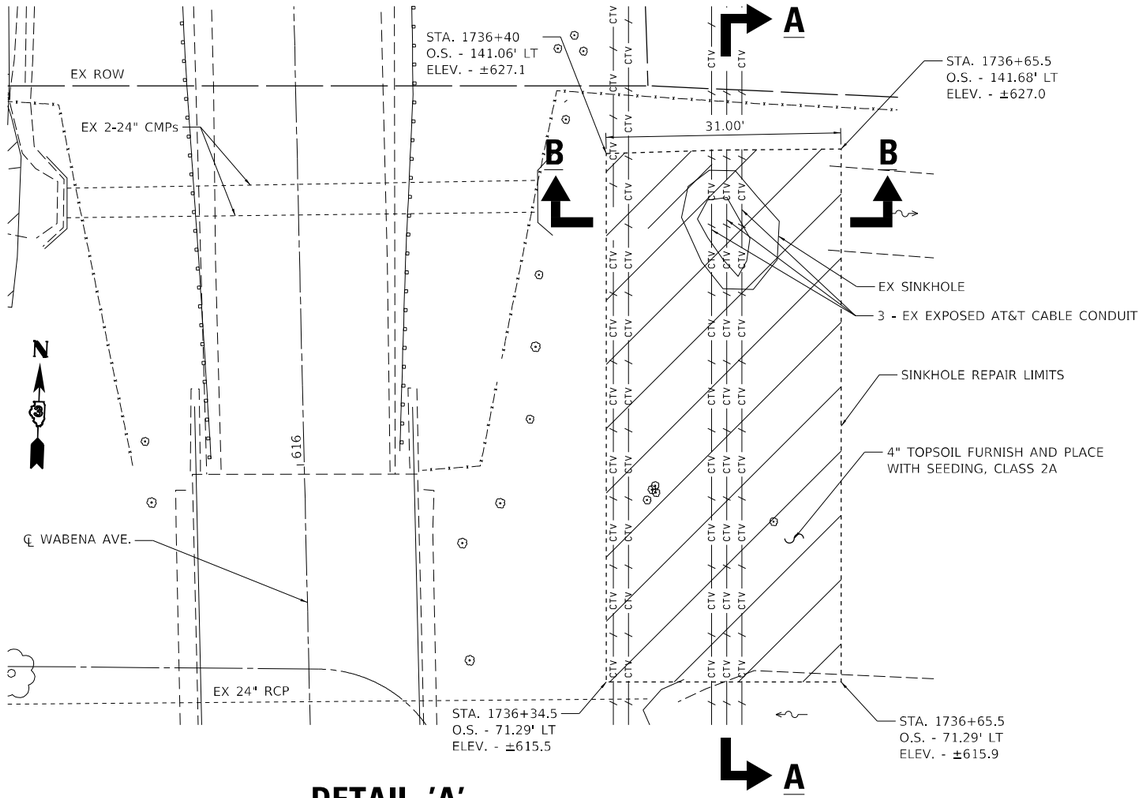

DETAIL 'A'

(PLAN VIEW)

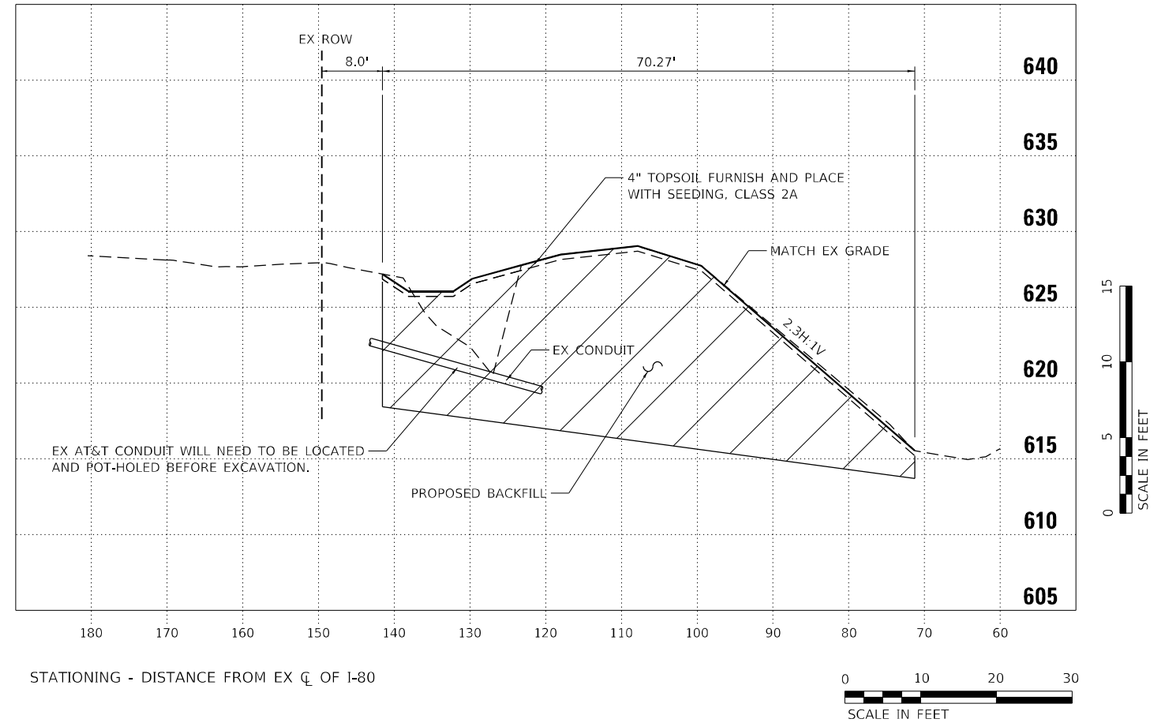

SECTION A–A

(LOOKING EAST)

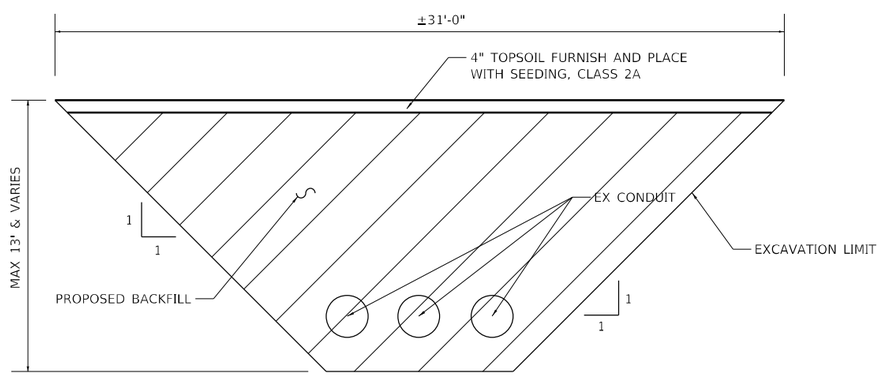

SECTION B–B

(LOOKING NORTH)
N.T.S.

SINKHOLE & GULLY REPAIR /DITCH GRADING QUANTITIES

PAY ITEM	DESCRIPTION	UNIT	QUANTITY
20100500	TREE REMOVAL, ACRES	ACRE	1.75
20200100	EARTH EXCAVATION	CU YD	335
21101615	TOPSOIL FURNISH AND PLACE, 4"	SQ YD	2,038
21400100	GRADING AND SHAPING DITCHES	FOOT	1,495
28100105	STONE RIPRAP, CLASS A3	SQ YD	12
28200200	FILTER FABRIC	SQ YD	12
X0321962	CONNECTION OF EXISTING PIPE UNDERDRAIN	EACH	1
X2020410	EARTH EXCAVATION (SPECIAL)	CU YD	405
X2080250	TRENCH BACKFILL, SPECIAL	CU YD	420
X5012610	CONCRETE HEADWALL REMOVAL PARTIAL	EACH	1

NOTES:

1. X2020410 EARTH EXCAVATION (SPECIAL) INCLUDES LOCATING EXISTING FIBER AND EXCAVATING TRENCH ACCORDING TO MEANS AND METHODS OF UTILITY OWNER.
2. X2080250 TRENCH BACKFILL, SPECIAL COVERS THE BACKFILLING OF THE FIBER LINES UNDER THE SINKHOLE ACCORDING TO THE MEANS AND METHODS OF THE UTILITY OWNER.
3. SINKHOLE REPAIR WORK SHALL BE PERFORMED BY THE UTILITY OWNER, PER THE PROVISIONS OF THE UTILTY PERMIT, AT THE OWNER'S EXPENSE.

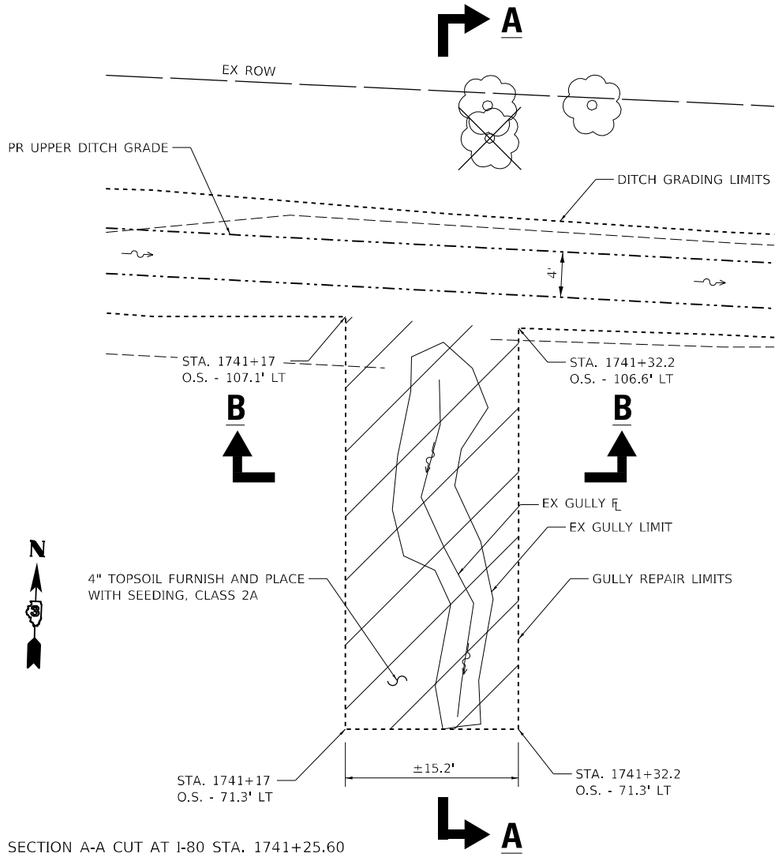

SECTION A-A CUT AT I-80 STA. 1741+25.60

DETAIL 'B'

(PLAN VIEW)

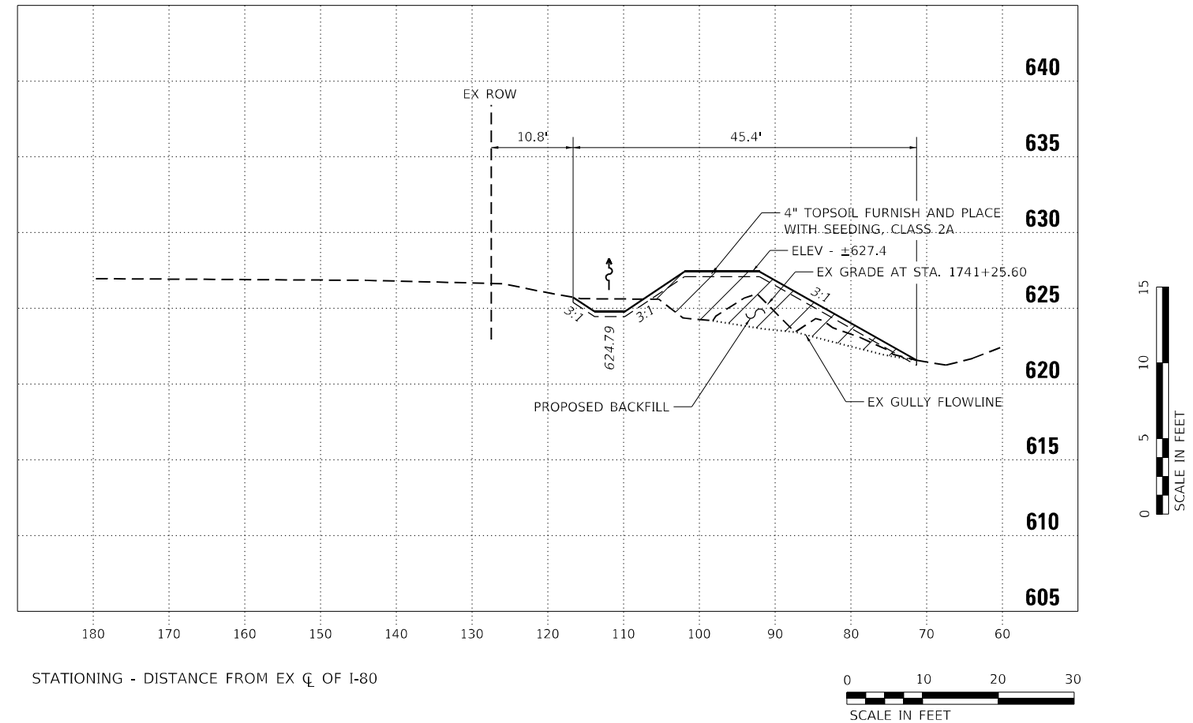

SECTION A–A

(LOOKING EAST)

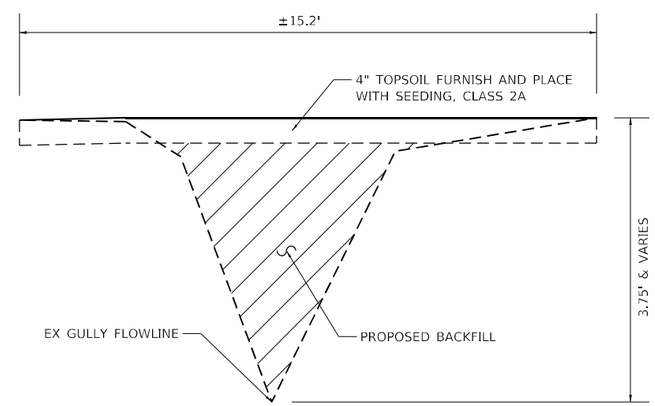

SECTION B–B

(LOOKING NORTH)
N.T.S.

NOTES:

1. SUITABLE EARTH THAT IS EXCAVATED FOR THE PROPOSED DITCH SHALL BE PLACED AS FILL IN THE GULLY EMBANKMENT IN LIFTS AND COMPACTED ACCORDING TO SECTION 205.

2. SEE SHEET 49 OF 135 FOR THE EARTH EXCAVATION AND TOPSOIL FURNISH AND PLACE, 4" SUMMARY OF QUANTITIES.

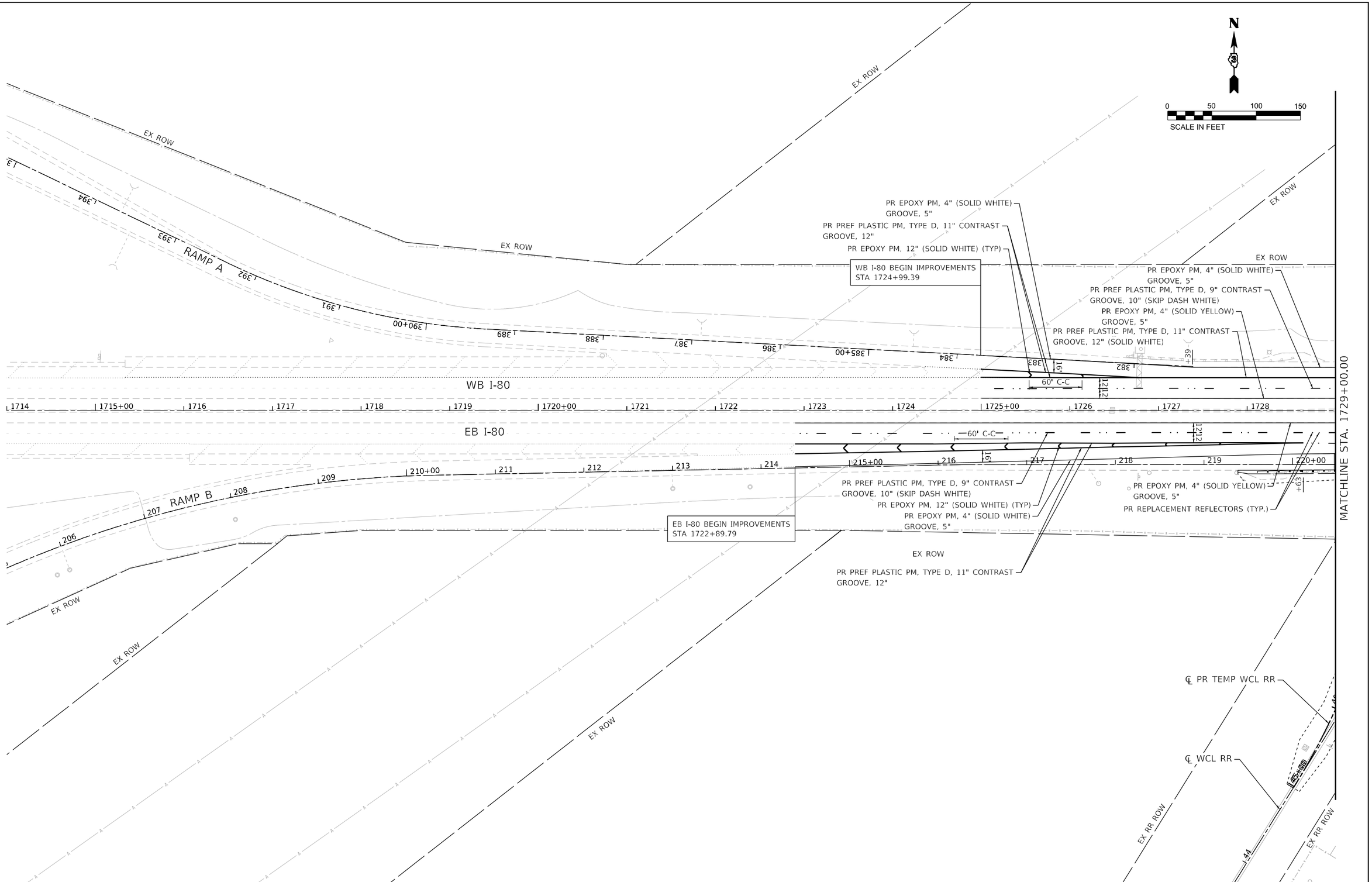

LIN ENGINEERING,LTD. Consulting Engineers Westmont, Illinois	USER NAME = 14nho	DESIGNED - JK	REVISED -	STATE OF ILLINOIS DEPARTMENT OF TRANSPORTATION	W.C. RAILROAD OVER F.A.I. ROUTE 80 PAVEMENT MARKING PLAN
		DRAWN - JK	REVISED -		
	PLOT SCALE = 100.0000 ' / in.	CHECKED - ST	REVISED -		
	PLOT DATE = 1/9/2025	DATE - 1/2025	REVISED -		SCALE: 1"=50' SHEET 1 OF 2 SHEETS STA. 1714+00.00 TO STA. 1729+00.00

F.A.I. RTE.	SECTION	COUNTY	TOTAL SHEETS	SHEET NO.
80	(32, 47-4)VB, HBR-3	GRUNDY/KENDALL	143	52
		CONTRACT NO. 66295		
		ILLINOIS FED. AID PROJECT		

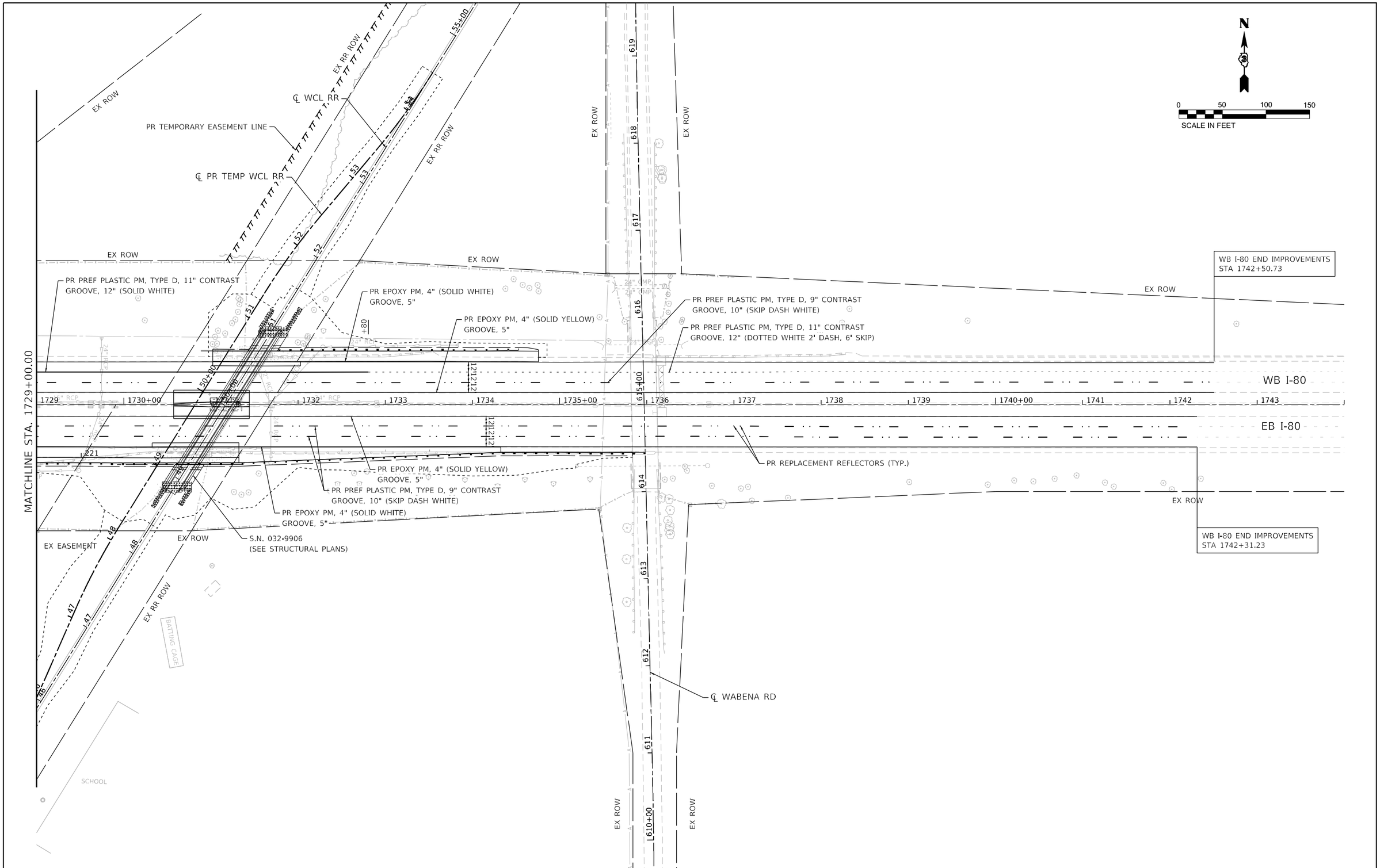

LIN ENGINEERING,LTD. Consulting Engineers Westmont, Illinois	USER NAME = 14nho	DESIGNED - JK	REVISED -	STATE OF ILLINOIS DEPARTMENT OF TRANSPORTATION	W.C. RAILROAD OVER F.A.I. ROUTE 80 PAVEMENT MARKING PLAN	F.A.I. RTE.	SECTION	COUNTY	TOTAL SHEETS	SHEET NO.
		DRAWN - JK	REVISED -			80	(32, 47-4)VB, HBR-3	GRUNDY/KENDALL	143	53
	PLOT SCALE = 100.0000 ' / in.	CHECKED - ST	REVISED -					CONTRACT NO. 66295		
	PLOT DATE = 1/9/2025	DATE - 1/2025	REVISED -		SCALE: 1"=50' SHEET 2 OF 2 SHEETS STA. 1729+00.00 TO STA. 1744+00.00			ILLINOIS FED. AID PROJECT		

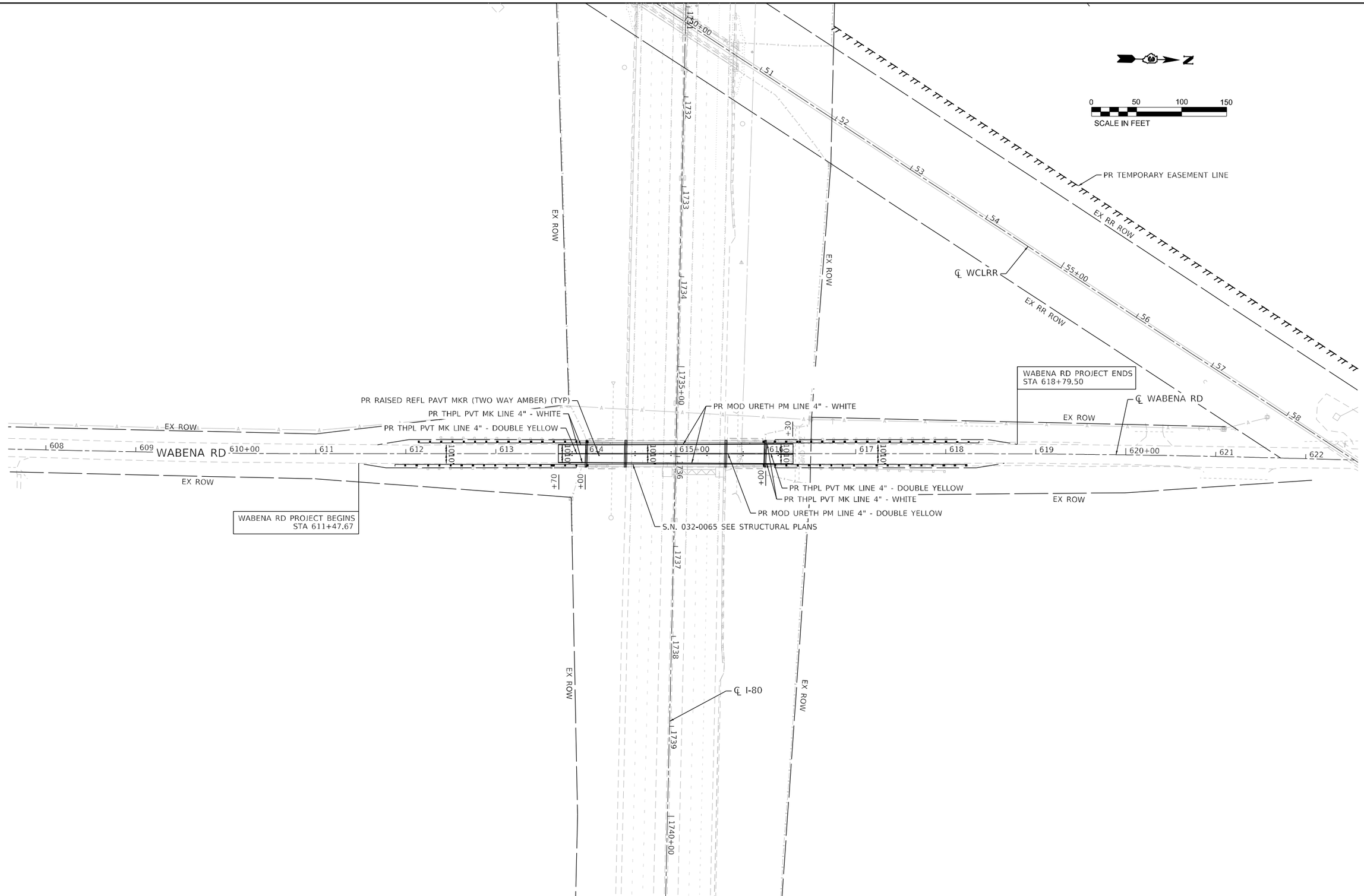

LIN ENGINEERING,LTD. Consulting Engineers Westmont, Illinois	USER NAME = 14nho	DESIGNED - NH	REVISED -	STATE OF ILLINOIS DEPARTMENT OF TRANSPORTATION	W.C. RAILROAD OVER F.A.I. ROUTE 80 WABENA RD PAVEMENT MARKING PLAN
		DRAWN - NH	REVISED -		
	PLOT SCALE = 100.0000 ' / in.	CHECKED - ST	REVISED -		
	PLOT DATE = 1/9/2025	DATE - 1/2025	REVISED -		SCALE: 1"=50' SHEET 1 OF 1 SHEETS STA. 611+47.67 TO STA. 618+79.50

F.A.I. RTE.	SECTION	COUNTY	TOTAL SHEETS	SHEET NO.
80	(32, 47-4)VB, HBR-3	GRUNDY/KENDALL	143	54
		CONTRACT NO. 66295		
		ILLINOIS FED. AID PROJECT		

N

0 50 100 150
SCALE IN FEET

EX ROW
EX RR ROW
PR TEMPORARY EASEMENT LINE
℄ WCL RR
℄ PR TEMP WCL RR
℄ I-80
WB I-80
EB I-80
WABENA RD
℄ WABENA RD
S.N. 032-9906
(SEE STRUCTURAL PLANS)
S.N. 032-0065
(SEE STRUCTURAL PLANS)
LIMITS OF CONSTRUCTION (TYP)
SCHOOL

LEGEND

- MULCH, METHOD 2
- SEEDING, CLASS 2A
- EROSION CONTROL BLANKET
- HEAVY DUTY EROSION CONTROL BLANKET
- INLET AND PIPE PROTECTION
- TEMPORARY DITCH CHECK

LIN ENGINEERING,LTD. Consulting Engineers Westmont, Illinois	USER NAME = 14nho	DESIGNED - JK	REVISED -
		DRAWN - JK	REVISED -
	PLOT SCALE = 100.0000 ' / in.	CHECKED - ST	REVISED -
	PLOT DATE = 1/9/2025	DATE - 1/2025	REVISED -

STATE OF ILLINOIS
DEPARTMENT OF TRANSPORTATION

W.C. RAILROAD OVER F.A.I. ROUTE 80
EROSION CONTROL PLAN

SCALE: 1"=50' | SHEET 1 OF 1 SHEETS | STA. 1723+50.00 TO STA. 1738+50.00

F.A.I. RTE.	SECTION	COUNTY	TOTAL SHEETS	SHEET NO.
80	(32, 47-4)VB, HBR-3	GRUNDY/KENDALL	143	55
		CONTRACT NO. 66295		
		ILLINOIS	FED. AID PROJECT	

EROSION CONTROL GENERAL NOTES:

1. ALL DISTURBED AREAS SHALL BE SEEDED OR SODDED AS SOON AS PRACTICAL AFTER CONSTRUCTION ACTIVITIES IN THAT AREA HAVE CONCLUDED. THE SURFACE OF STRIPPED AREAS SHALL BE PERMANENTLY OR TEMPORARILY PROTECTED FROM SOIL EROSION WITHIN 14 DAYS AFTER FINAL GRADE IS REACHED. STRIPPED AREAS THAT WILL REMAIN UNDISTURBED FOR MORE THAN 15 DAYS AFTER INITIAL DISTURBANCE SHALL BE PROTECTED FROM EROSION. TEMPORARY SEDIMENT AND EROSION CONTROL MEASURES SHALL BE MAINTAINED CONTINUOUSLY UNTIL PERMANENT COVER IS ESTABLISHED.
2. SEDIMENT AND EROSION CONTROL DEVICES SHALL BE FUNCTIONAL BEFORE THE PROJECT SITE IS OTHERWISE DISTURBED.
3. UNLESS OTHERWISE NOTED, ALL VEGETATIVE AND STRUCTURAL EROSION AND SEDIMENT CONTROL PRACTICES WILL BE CONSTRUCTED ACCORDING TO MINIMUM STANDARDS AND SPECIFICATIONS IN THE IDOT STANDARD SPECIFICATIONS FOR ROAD AND BRIDGE CONSTRUCTION AND THE LATEST EDITION OF THE ILLINOIS URBAN MANUAL.
4. A COPY OF THE APPROVED EROSION AND SEDIMENT CONTROL PLAN SHALL BE MAINTAINED ON SITE AT ALL TIMES.
5. IF A TOPSOIL STOCKPILE IS TO REMAIN IN PLACE FOR MORE THAN 3 DAYS, EROSION CONTROL MEASURES WILL BE PROVIDED. SOIL STOCKPILES MUST NOT BE LOCATED WITHIN ANY SPECIAL MANAGEMENT AREAS. SPECIAL MANAGEMENT AREAS INCLUDE WETLANDS, ADJACENT OFF-SITE WETLANDS, AND FLOODPLAINS.
6. CLEANING OF VEHICLES AND EQUIPMENT SHALL BE PERFORMED IN A MANNER TO REDUCE THE AMOUNT OF POLLUTANTS TRIBUTARY TO STORM SEWERS AND OPEN WATERS TO THE MAXIMUM EXTENT POSSIBLE.
7. THE ENGINEER SHALL INSPECT EROSION CONTROL MEASURES PERIODICALLY AND WITHIN 24 HOURS OF ANY STORM EXCEEDING 0.5 INCH PRECIPITATION. DAMAGED AND INEFFECTIVE EROSION CONTROL SYSTEMS REPLACED DUE TO SEDIMENT LOADING WILL BE PAID FOR AT THE CONTRACT UNIT PRICE FOR THE APPLICABLE EROSION CONTROL ITEM.
8. THE COST OF REPAIRING OR REMOVING SEDIMENT FROM EROSION CONTROL SYSTEMS SHALL BE INCLUDED IN THE CONTRACT UNIT PRICE FOR THE APPLICABLE EROSION CONTROL ITEM.
9. ALL EROSION CONTROL MEASURES SHALL BE KEPT OPERATIONAL AND MAINTAINED CONTINUOUSLY THROUGHOUT THE PERIOD OF LAND DISTURBANCE UNTIL PERMANENT SEDIMENT AND EROSION CONTROL MEASURES ARE OPERATIONAL.
10. REFER TO STORM WATER POLLUTION PREVENTION PLAN FOR INSPECTION AND MAINTENANCE SCHEDULES, AND SEQUENCE OF ACTIVITIES.
11. ALL NECESSARY MEASURES SHALL BE TAKEN TO CONTAIN ANY FUEL OR POLLUTION RUN OFF, LEAKY EQUIPMENT OR SUPPLIES SHALL BE IMMEDIATELY REPAIRED OR REMOVED FROM THE SITE.

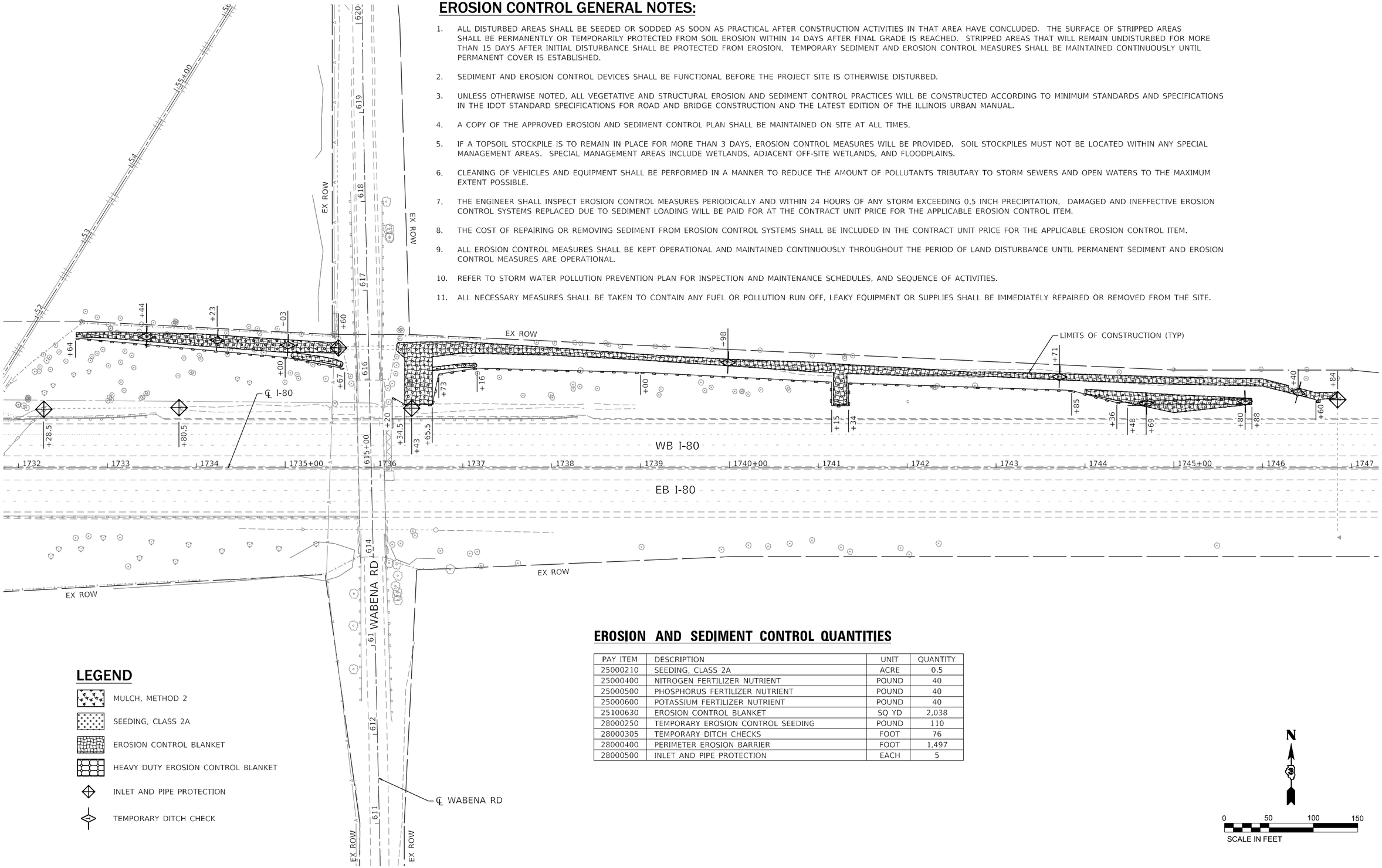

LEGEND

- MULCH, METHOD 2
- SEEDING, CLASS 2A
- EROSION CONTROL BLANKET
- HEAVY DUTY EROSION CONTROL BLANKET
- INLET AND PIPE PROTECTION
- TEMPORARY DITCH CHECK

EROSION AND SEDIMENT CONTROL QUANTITIES

PAY ITEM	DESCRIPTION	UNIT	QUANTITY
25000210	SEEDING, CLASS 2A	ACRE	0.5
25000400	NITROGEN FERTILIZER NUTRIENT	POUND	40
25000500	PHOSPHORUS FERTILIZER NUTRIENT	POUND	40
25000600	POTASSIUM FERTILIZER NUTRIENT	POUND	40
25100630	EROSION CONTROL BLANKET	SQ YD	2,038
28000250	TEMPORARY EROSION CONTROL SEEDING	POUND	110
28000305	TEMPORARY DITCH CHECKS	FOOT	76
28000400	PERIMETER EROSION BARRIER	FOOT	1,497
28000500	INLET AND PIPE PROTECTION	EACH	5

N

0 50 100 150
SCALE IN FEET

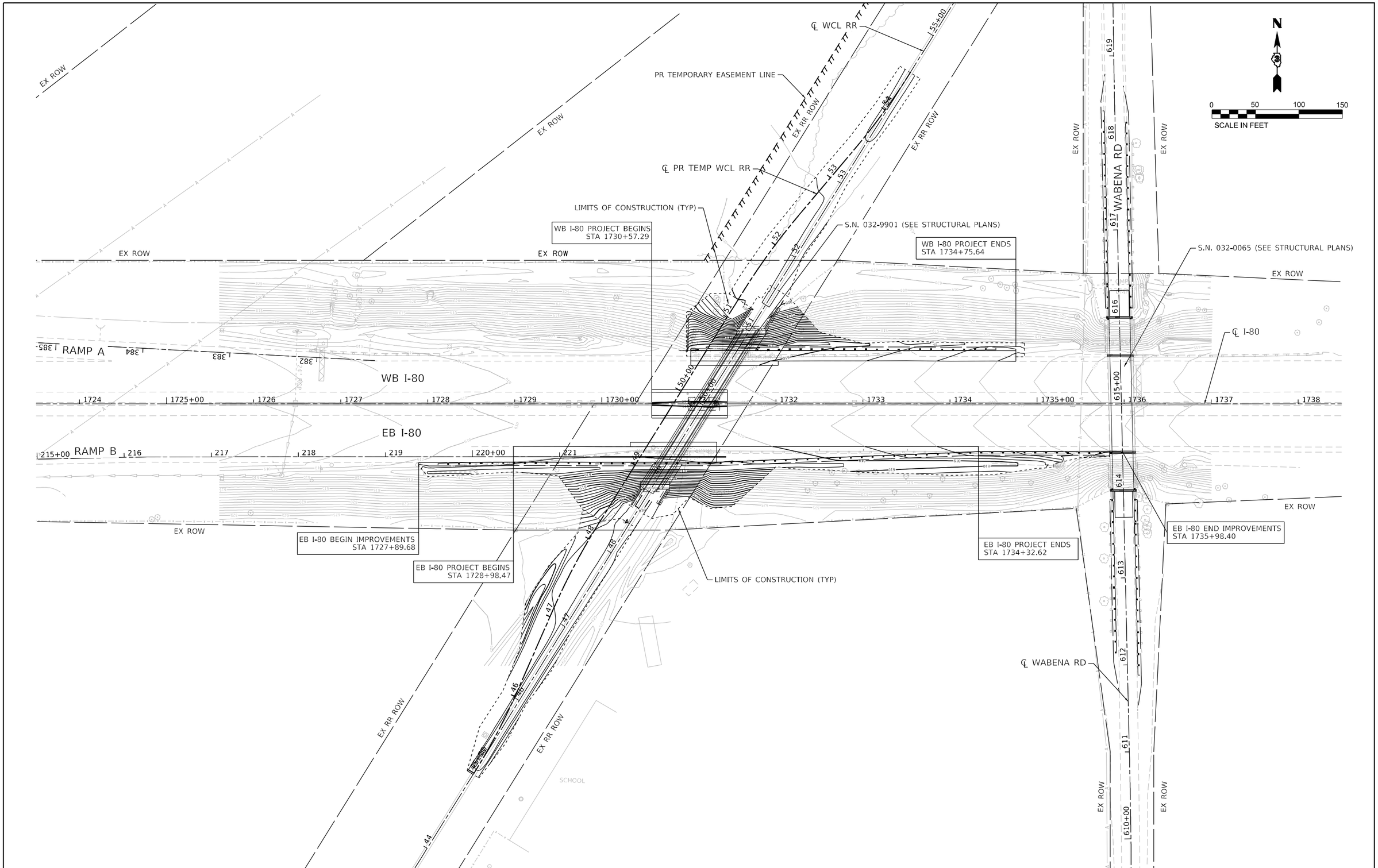

LIN ENGINEERING,LTD. Consulting Engineers Westmont, Illinois	USER NAME = 14nha	DESIGNED - JK	REVISED -
		DRAWN - JK	REVISED -
	PLOT SCALE = 100.0000 ' / in.	CHECKED - ST	REVISED -
	PLOT DATE = 1/9/2025	DATE - 1/2025	REVISED -

STATE OF ILLINOIS
DEPARTMENT OF TRANSPORTATION

W.C. RAILROAD OVER F.A.I. ROUTE 80
GRADING PLAN

SCALE: 1"=50' | SHEET 1 OF 1 SHEETS | STA. 1723+50.00 TO STA. 1738+50.00

F.A.I. RTE.	SECTION	COUNTY	TOTAL SHEETS	SHEET NO.
80	(32, 47-4)VB, HBR-3	GRUNDY/KENDALL	143	57
		CONTRACT NO. 66295		
		ILLINOIS FED. AID PROJECT		

Bench Mark: 1736 - Chiseled Square on Pier Wall @ Wabena Ave. & F.A.I. 80 Sta. 599+46.25, 4.44' Rt. Elev. 618.99.
Existing Structure: SN 032-9901 built in 1960 carries one Wisconsin Central, Ltd. (WC) track over FAI 80. The existing structure is two simple span through-girders with vertical face abutments and a total length of 140 feet. A temporary runaround track will be constructed for use during construction. Once the permanent abutments and pier are in place, the temporary runaround superstructure will be jacked into place to become the permanent superstructure. The existing superstructure will be removed in its entirety.
Salvage: No salvage.

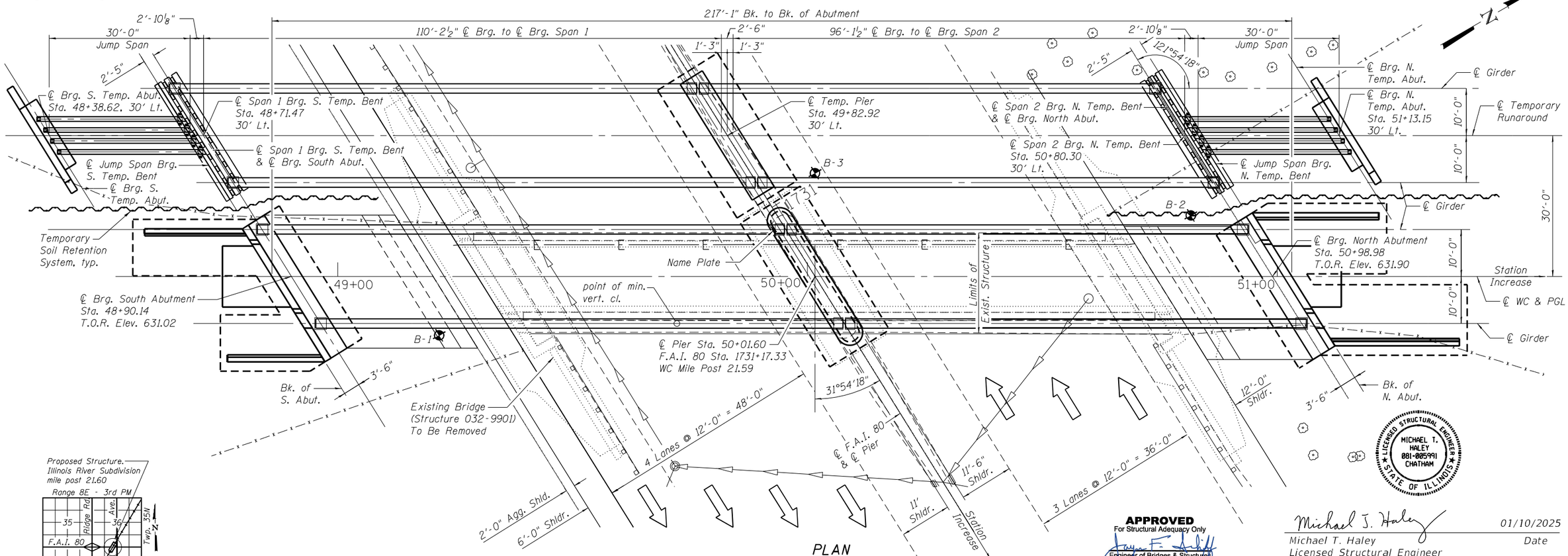

PLAN

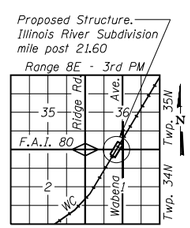

LOCATION SKETCH

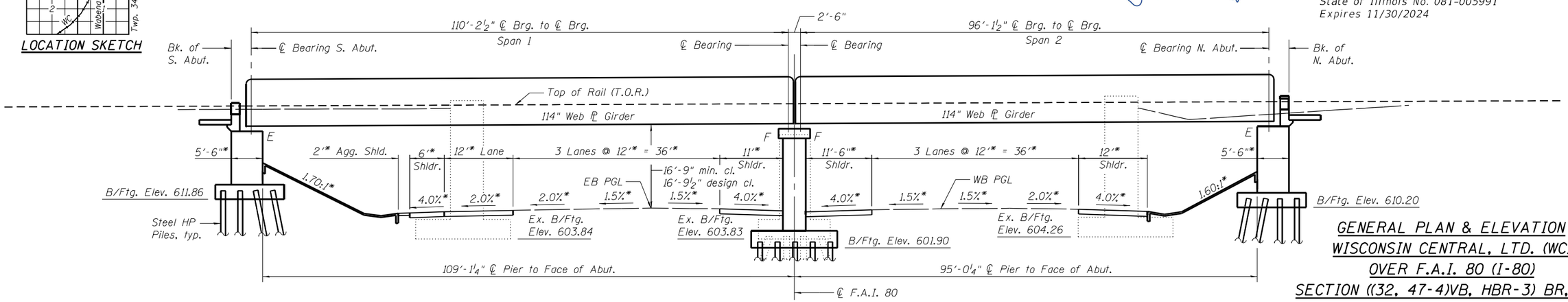

ELEVATION

(Looking West) * At Right L's to FAI 80

APPROVED
For Structural Adequacy Only
Engineer of Bridges & Structures

Michael T. Haley 01/10/2025
Michael T. Haley Date
Licensed Structural Engineer
State of Illinois No. 081-005991
Expires 11/30/2024

LICENSED STRUCTURAL ENGINEER MICHAEL T. HALEY 081-005991 CHATHAM STATE OF ILLINOIS

GENERAL PLAN & ELEVATION
WISCONSIN CENTRAL, LTD. (WC)
OVER F.A.I. 80 (I-80)
SECTION ((32, 47-4)VB, HBR-3) BR, BRR
GRUNDY COUNTY
STATION 50+01.60
STRUCTURE NO. 032-9906

ORIGINAL: DLZ DLZ Illinois, Inc. UPDATED: LIN ENGINEERING, LTD. Consulting Engineers Springfield, Illinois		DESIGNED - ZJH	REVISED
		CHECKED - PRD JCZ	REVISED
		DRAWN - BAE	REVISED
	DATE - 03/25/22	CHECKED - ZJH JCZ	REVISED

STATE OF ILLINOIS
DEPARTMENT OF TRANSPORTATION

SHEET NO. 1 OF 49 SHEETS

F.A.I. RTE.	SECTION	COUNTY	TOTAL SHEETS	SHEET NO.
80	((32, 47-4)VB, HBR-3) BR, BRR	GRUNDY	143	58
		CONTRACT NO. 66295		
		ILLINOIS FED. AID PROJECT		

DESIGN SPECIFICATIONS

American Railway Engineering
and Maintenance-of-Way
Association (AREMA)
Manual for Railway Engineering, 2019
CN Guidelines for Design of Railway Structures (2006)

LOADING

LIVE LOAD: Cooper E90 (E90 as based on 90 kip Axles) or Alternate Live Load Plus Impact for rolling equipment without hammer blow. Service Load Design

DEAD LOAD: Includes additional 12 inches of Future Ballast

WALKWAY LIVE LOAD: 100 psf

DESIGN STRESSES

FIELD UNITS

f'_c = 3500 psi
f_y = 60,000 psi (Reinforcement)
f_s = 27,500 psi (AASHTO M270/ASTM A709, Grade 50)

SEISMIC DATA

Seismic Performance Category (SPC) = A
Bedrock Acceleration Coefficient (A) = 3.9%G
Site Coefficient (S) = 1.2

CONSTRUCTION SEQUENCE

1) Construct Temporary Runaround
2) Shift RR Traffic to Temporary Runaround Alignment
3) Remove Existing Superstructure and Substructure
4) Excavate and Construct New Abutments and Pier
5) Jack "Temporary" Superstructure into Final Alignment on New Substructure
6) Remove remaining runaround including temporary substructure

GENERAL NOTES

1. Except as otherwise specified, fasteners shall be ASTM F3125 Grade A325 Type 1 hot dip galvanized bolts. Bolts 7/8 in. ϕ, holes 15/16 in. ϕ, unless otherwise noted. See special provision for "Metallizing of Structural Steel".
2. Calculated weight of Structural Steel** = 844,309 lbs.
   AASHTO M270 Gr. 50 (ASTM A709 Gr. 50) = 844,141 lbs.
   AASHTO M169 Gr. 1015 (ASTM A108 Gr. 1015) = 168 lbs. (Headed studs)
   FRACTURE CRITICAL MATERIAL (F.C.M.) to conform to AREMA Section 1.14 of Chapter 15.
   **Jump Span and Temp. Steel Bents weight excluded.
3. All structural steel shall be AASHTO M270 Grade 50 and shall be metallized. See special provision for "Metallizing of Structural Steel".
4. No field welding is permitted except as specified in the contract documents.
5. Reinforcement bars designated (E) shall be epoxy coated.
6. Plan dimensions and details relative to existing plans are subject to nominal construction variations. The Contractor shall field verify existing dimensions and details affecting new construction and make necessary approved adjustments prior to construction or ordering of materials. Such variations shall not be cause for additional compensation for a change in scope of the work, however, the Contractor will be paid for the quantity actually furnished at the unit price bid for the work.
7. Bearing seat surfaces shall be constructed or adjusted to their designated elevations within a tolerance of 1/8 inch (0.01 ft.). Adjustment shall be made either by grinding the surface or by shimming the bearings.
8. Concrete Sealer shall be applied to the exposed surfaces of backwalls, top of bridge seats and face of steps, and exposed faces of abutments and cap and exposed wall of piers.
9. Load carrying components designated "CVN" shall conform to the Impact Testing Requirements, Zone 3.
10. Two 1/8 in. adjusting shims shall be provided for each bearing in addition to all other plates or shims and placed as shown on bearing details.
11. Granular Backfill for Structures shall be compacted according to Article 207.03 of the Standard Specifications.
12. Care shall be taken when removing the existing superstructure, asbestos is present. (See Sheet #5 of 20 on existing plans: "Unsaturated 12 lbs. asbestos paper").

TOTAL BILL OF MATERIAL

ITEM	UNIT	SUPER	SUB	TOTAL
Removal of Existing Structures	Each			1
Structure Excavation	Cu. Yd.		2,128	2,128
Concrete Structures	Cu. Yd.		663.2	663.2
Furnishing and Erecting Structural Steel	L. Sum	1		1
Reinforcement Bars, Epoxy Coated	Pound		85,770	85,770
Pipe Handrail, Special	Foot	213		213
Slope Wall 4 Inch	Sq. Yd.		177	177
Furnishing Steel Piles HP 12x84	Foot		8,196	8,196
Driving Piles	Foot		8,196	8,196
Test Pile Steel HP 12x84	Each		3	3
Pile Shoes	Each		219	219
Temporary Soil Retention System	Sq. Ft.		5,309	5,309
Name Plates	Each		1	1
Anchor Bolts, 1 1/4"	Each		40	40
Membrane Waterproofing (Special)	Sq. Ft.	4,235		4,235
Concrete Sealer	Sq. Ft.		1,939	1,939
Pipe Underdrains for Structures, 4"	Foot		200	200
Steel Grate Walkway	Foot	213		213
Temporary Jump Span	L. Sum	1		1
Drainage System for Structures	L. Sum	1		1
Bridge Roll-in	L. Sum	1		1
Granular Backfill for Structures	Cu. Yd.		264	264
Temporary Substructures	L. Sum		1	1
Geocomposite Wall Drain	Sq. Yd.		262	262
Asbestos Waterproofing Removal	Sq. Ft.	2,300		2,300
Steel Bearing Assembly	Each		8	8

	+0.50%		+0.50%		+0.50%		+0.50%
Sta. 48+83.91	Sta. 49+94.12	Sta. 49+96.62	Sta. 50+92.74	Sta. 48+96.36	Sta. 50+06.57	Sta. 50+09.07	Sta. 51+05.20
Elev. 626.70	Elev. 627.25	Elev. 627.26	Elev. 627.74	Elev. 626.74	Elev. 627.29	Elev. 627.30	Elev. 627.78

WEST GIRDER BOTTOM STEEL ELEV. WISCONSIN CENTRAL, LTD.

EAST GIRDER BOTTOM STEEL ELEV. WISCONSIN CENTRAL, LTD.

Note:
Girder Elevations are given at underside of bottom flange ℄.

Sta. 45+00	Sta. 49+00	Sta. 51+00	Sta. 55+00
Elev. 629.59	Elev. 630.83	Elev. 631.54	Elev. 633.15

PROFILE GRADE WISCONSIN CENTRAL, LTD.
Final Alignment

P.C. Sta. 44+81.32	P.C. Sta. 48+81.32	P.C. Sta. 50+81.32	P.C. Sta. 54+81.32
Elev. 629.59	Elev. 630.83	Elev. 631.54	Elev. 633.15

PROFILE GRADE WISCONSIN CENTRAL, LTD.
Temporary Runaround

P.C. Sta. 1730+50	P.I. Sta. 1731+00	P.C. Sta. 1731+50	P.C. Sta. 1732+00
Elev. 609.71	Elev. 609.77	Elev. 609.97	Elev. 610.36

WB PROFILE GRADE F.A.I. RTE. 80

P.C. Sta. 1730+00	P.I. Sta. 1730+50	P.C. Sta. 1731+00	P.C. Sta. 1731+50
Elev. 609.68	Elev. 609.69	Elev. 609.81	Elev. 610.10

EB PROFILE GRADE F.A.I. RTE. 80

INDEX OF DRAWINGS

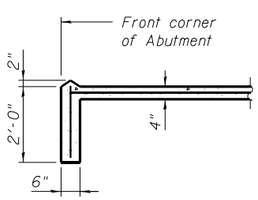

SECTION A-A

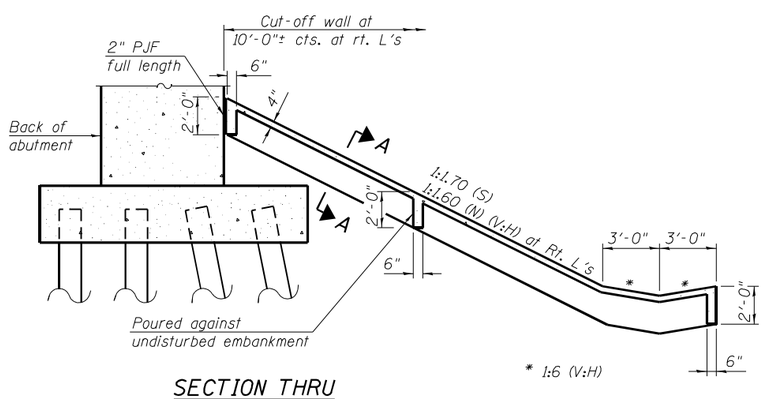

SECTION THRU CONCRETE SLOPEWALL

Slopewall shall be reinforced with welded wire fabric, 6" x 6" - W4.0 x W4.0, weighing 58 lbs. per 100 sq. ft.

WISCONSIN CENTRAL, LTD.
BUILT 20__ BY
STATE OF ILLINOIS
F.A.I. RT. 80 SEC. (32, 47-4)VB, HBR-3
STA. 50+01.60 LOADING COOPER E90
STRUCTURE NO. 032-9906

NAME PLATE
See Std. 515001

ORIGINAL:	UPDATED:							
DLZ Illinois, Inc.	LIN ENGINEERING, LTD. Consulting Engineers Springfield, Illinois		DESIGNED - ZJH	REVISED	STATE OF ILLINOIS DEPARTMENT OF TRANSPORTATION	GENERAL DATA STRUCTURE NO. 032-9906	F.A.I. RTE. 80	SECTION (32, 47-4)VB, HBR-3) BR, BRR
			CHECKED - PRD JCZ	REVISED			COUNTY GRUNDY	TOTAL SHEETS 143 / SHEET NO. 59
			DRAWN - BAE	REVISED			CONTRACT NO. 66295	
		DATE - 03/25/22	CHECKED - ZJH JCZ	REVISED		SHEET NO. 2 OF 49 SHEETS	ILLINOIS	FED. AID PROJECT

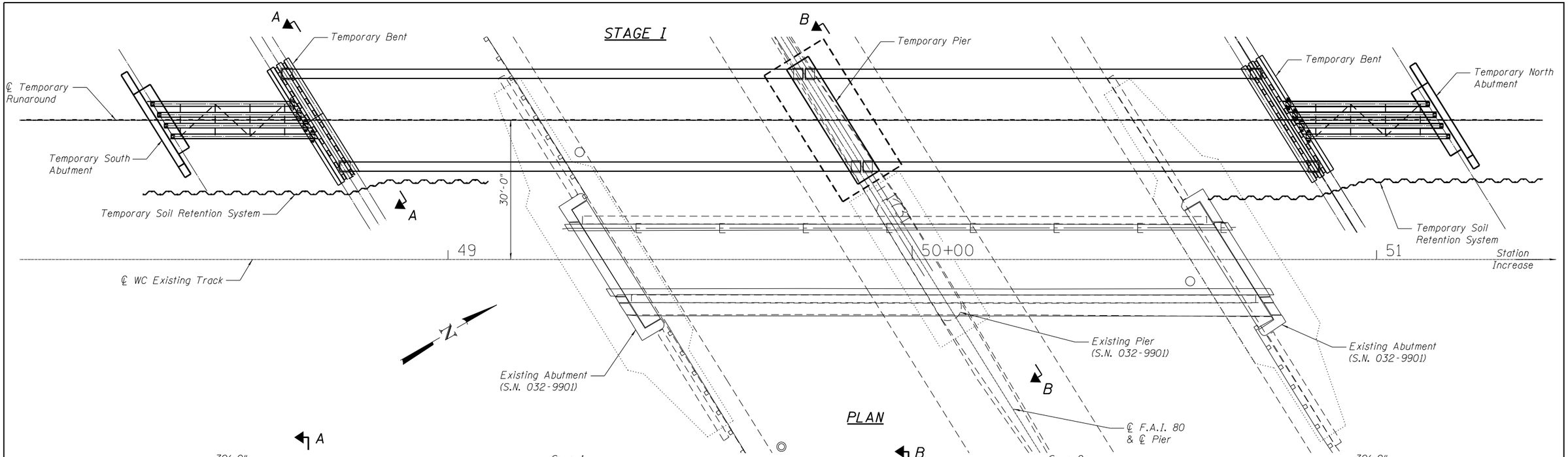

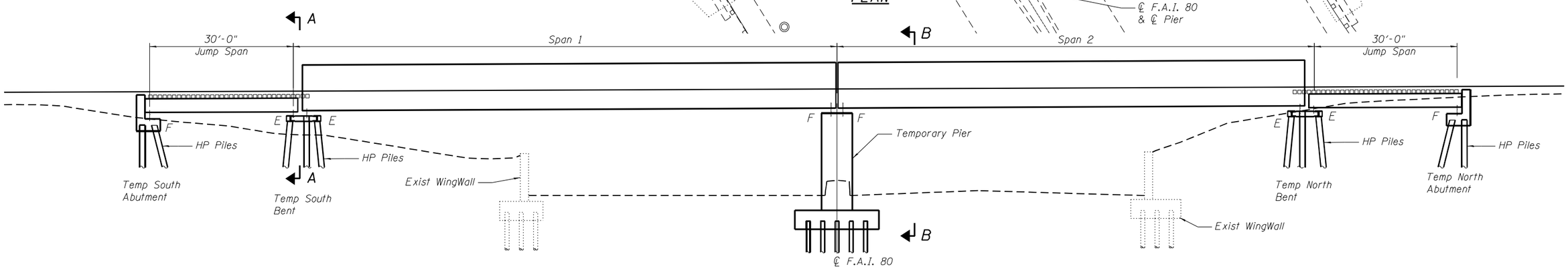

TEMPORARY STRUCTURE ELEVATION

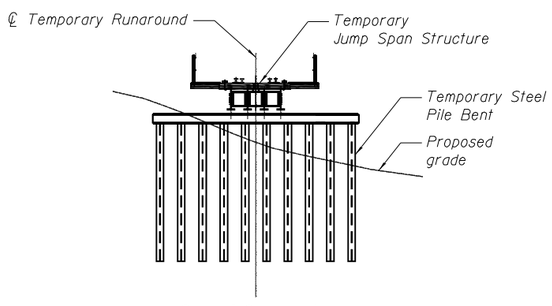

SECTION A-A

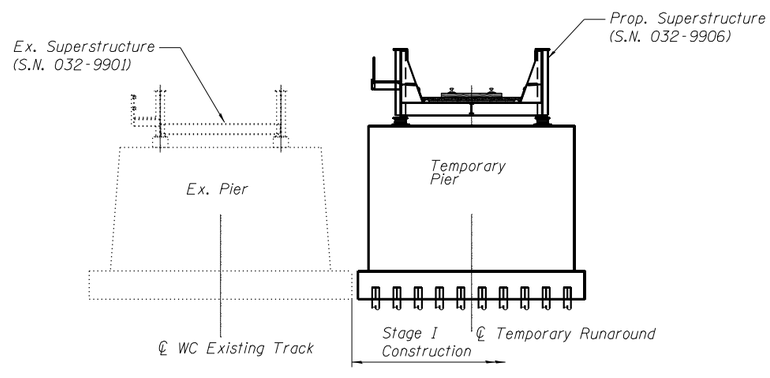

SECTION B-B

SUGGESTED SEQUENCE FOR STAGE I CONSTRUCTION:

1. Install Temporary Soil Retention System.
2. Construct Temp. Pier & Jump Span Bents & Abut.
3. Re-Grade Approaches For Wisconsin Central, Ltd.
4. Erect Super Structure & Jump Span Super Structure.
5. Install Drainage & Waterproofing Membrane.
6. Place and Grade Ballast (By WC).
7. Set Ties & Tracks (By WC).
8. Switch Rail Traffic To Run Around (Temp.).

ORIGINAL: DLZ DLZ Illinois, Inc. UPDATED: LIN ENGINEERING, LTD. Consulting Engineers Springfield, Illinois		DESIGNED - ZJH	REVISED
		CHECKED - PRD MTH	REVISED
		DRAWN - BAE	REVISED
	DATE - 03/25/22	CHECKED - ZJH MTH	REVISED

STATE OF ILLINOIS
DEPARTMENT OF TRANSPORTATION

SEQUENCE OF CONSTRUCTION – STAGE I & NOTES
STRUCTURE NO. 032–9906

SHEET NO. 3 OF 49 SHEETS

F.A.I. RTE.	SECTION	COUNTY	TOTAL SHEETS	SHEET NO.
80	((32, 47-4)VB, HBR-3) BR, BRR	GRUNDY	143	60
		CONTRACT NO. 66295		
	ILLINOIS	FED. AID PROJECT		

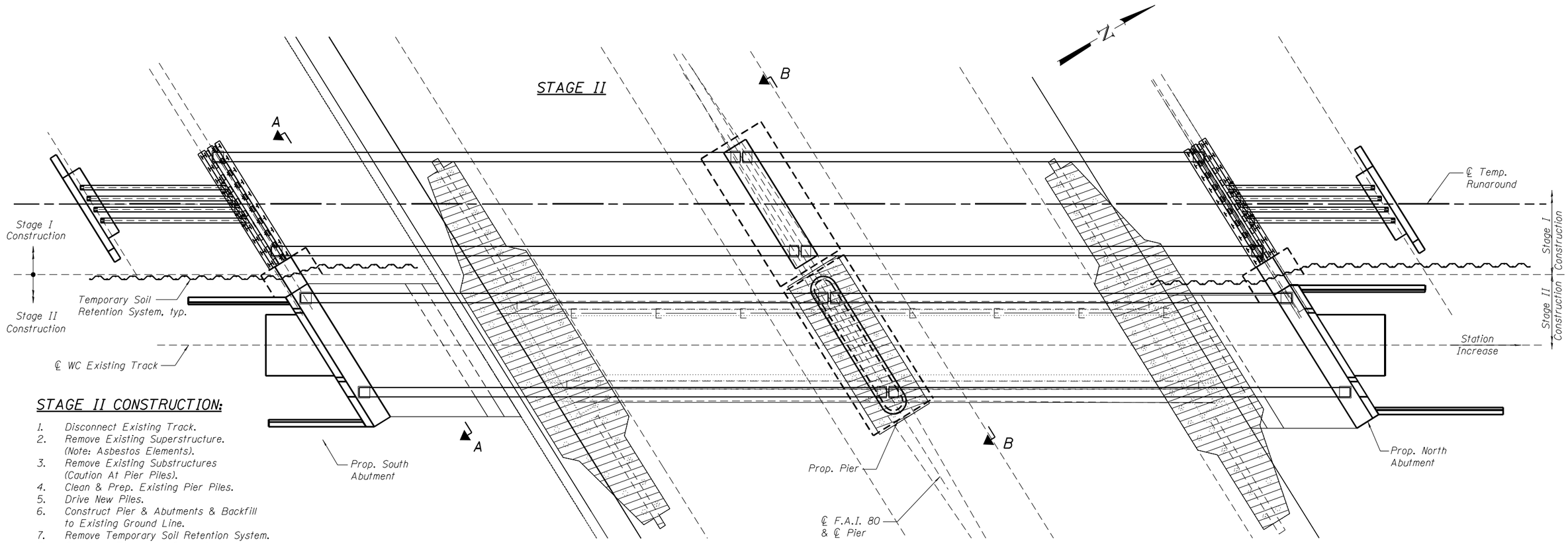

PLAN

STAGE II CONSTRUCTION:

1. Disconnect Existing Track.
2. Remove Existing Superstructure. (Note: Asbestos Elements).
3. Remove Existing Substructures (Caution At Pier Piles).
4. Clean & Prep. Existing Pier Piles.
5. Drive New Piles.
6. Construct Pier & Abutments & Backfill to Existing Ground Line.
7. Remove Temporary Soil Retention System.
8. Construct Temporary Concrete Links.
9. Construct Drainage.
10. Halt Run Around Traffic.
11. Disconnect Track From Jump Span.
12. Roll-In Superstructure. Both spans shall be rolled in simultaneously.
13. Connect Drainage.
14. Attach Closure Deck Plates. To Abutment Back Walls.
15. Connect Track.
16. Open To Rail Traffic.

- Existing Structure Removal, Paid for as "Removal of Existing Structures".

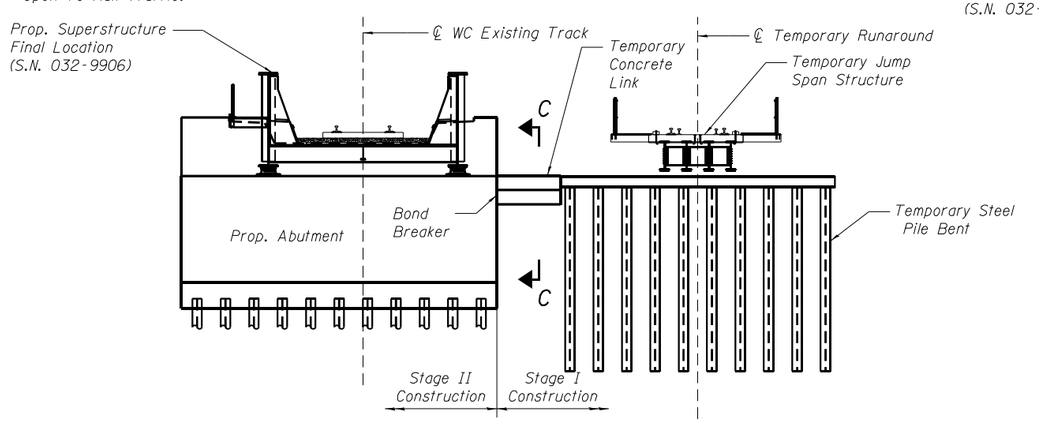

SECTION A-A

See Sheet 15 for Secton C-C

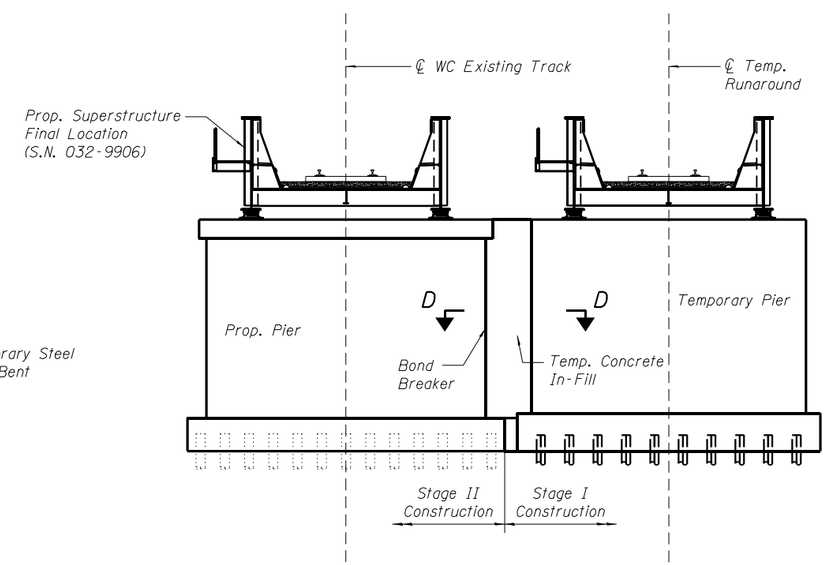

SECTION B-B

See Sheet 15 for Secton D-D

Note:
Existing Piles at the proposed pier are to be reused with the construction of the new pier.

ORIGINAL: DLZ Illinois, Inc.	UPDATED: LIN ENGINEERING, LTD. Consulting Engineers Springfield, Illinois								
		DESIGNED - ZJH		REVISED	STATE OF ILLINOIS DEPARTMENT OF TRANSPORTATION	SEQUENCE OF CONSTRUCTION – STAGE II & NOTES STRUCTURE NO. 032–9906	F.A.I. RTE.	SECTION	COUNTY	TOTAL SHEETS	SHEET NO.
		CHECKED - PRD	MTH	REVISED			80	((32, 47-4)VB, HBR-3) BR, BRR	GRUNDY	143	61
		DRAWN - BAE		REVISED					CONTRACT NO. 66295		
	DATE - 03/25/22	CHECKED - ZJH	MTH	REVISED		SHEET NO. 4 OF 49 SHEETS		ILLINOIS	FED. AID PROJECT		

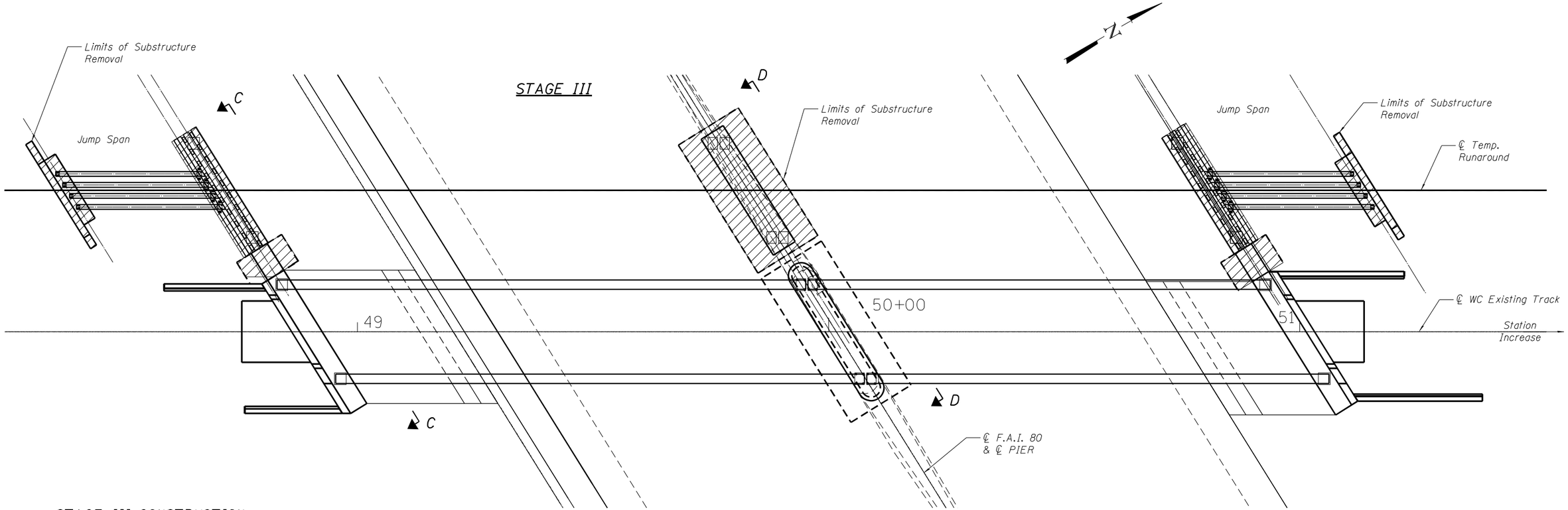

PLAN

STAGE III CONSTRUCTION

1. Remove Jump Span.
2. Remove Existing Temp. Substructures.
3. Perform Final Grading.
4. Clean Up.

- Structure Removal. Cost included with Temporary Jump Span.

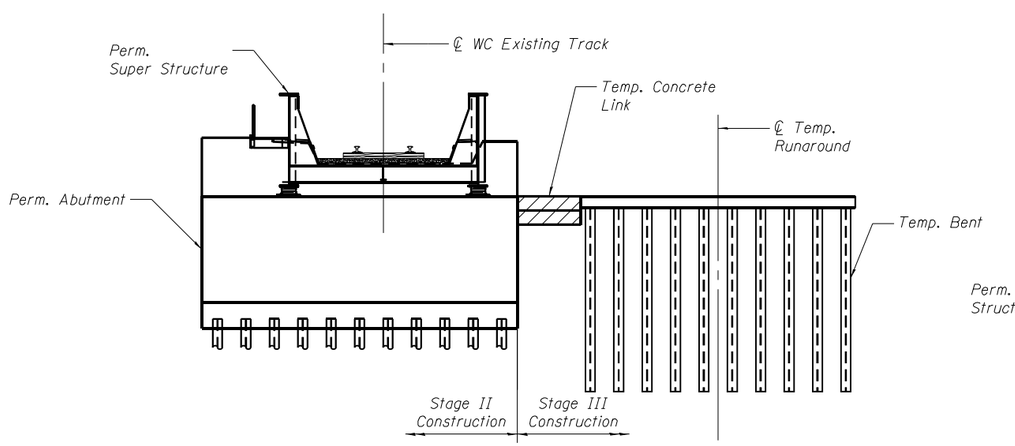

SECTION C-C

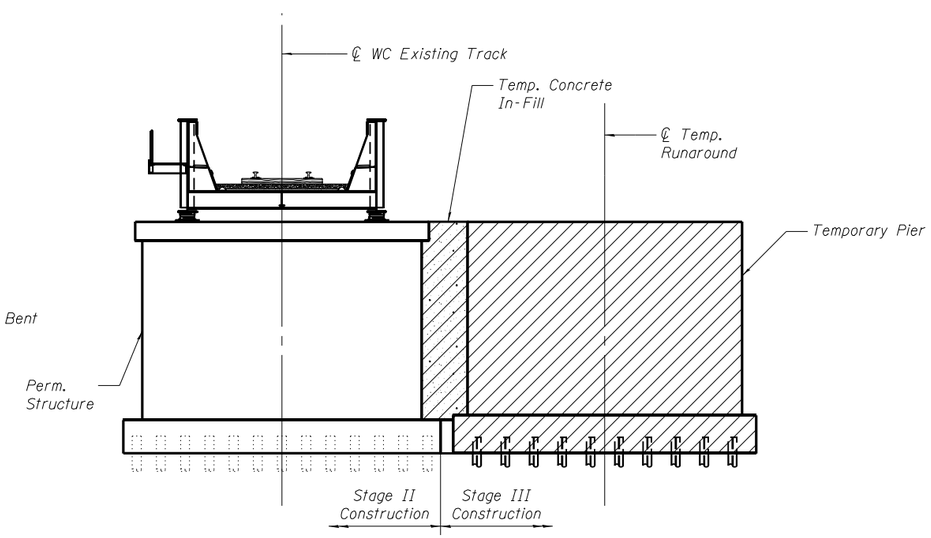

SECTION D-D

ORIGINAL: DLZ Illinois, Inc. UPDATED: LIN ENGINEERING,LTD. Consulting Engineers Springfield, Illinois		DESIGNED - ZJH	REVISED	STATE OF ILLINOIS DEPARTMENT OF TRANSPORTATION	SEQUENCE OF CONSTRUCTION – STAGE III & NOTES STRUCTURE NO. 032–9906	F.A.I. RTE.	SECTION	COUNTY	TOTAL SHEETS	SHEET NO.
		CHECKED - PRD MTH	REVISED			80	((32, 47-4)VB, HBR-3) BR, BRR	GRUNDY	143	62
		DRAWN - BAE	REVISED					CONTRACT NO. 66295		
	DATE - 03/25/22	CHECKED - ZJH MTH	REVISED		SHEET NO. 5 OF 49 SHEETS		ILLINOIS	FED. AID PROJECT		

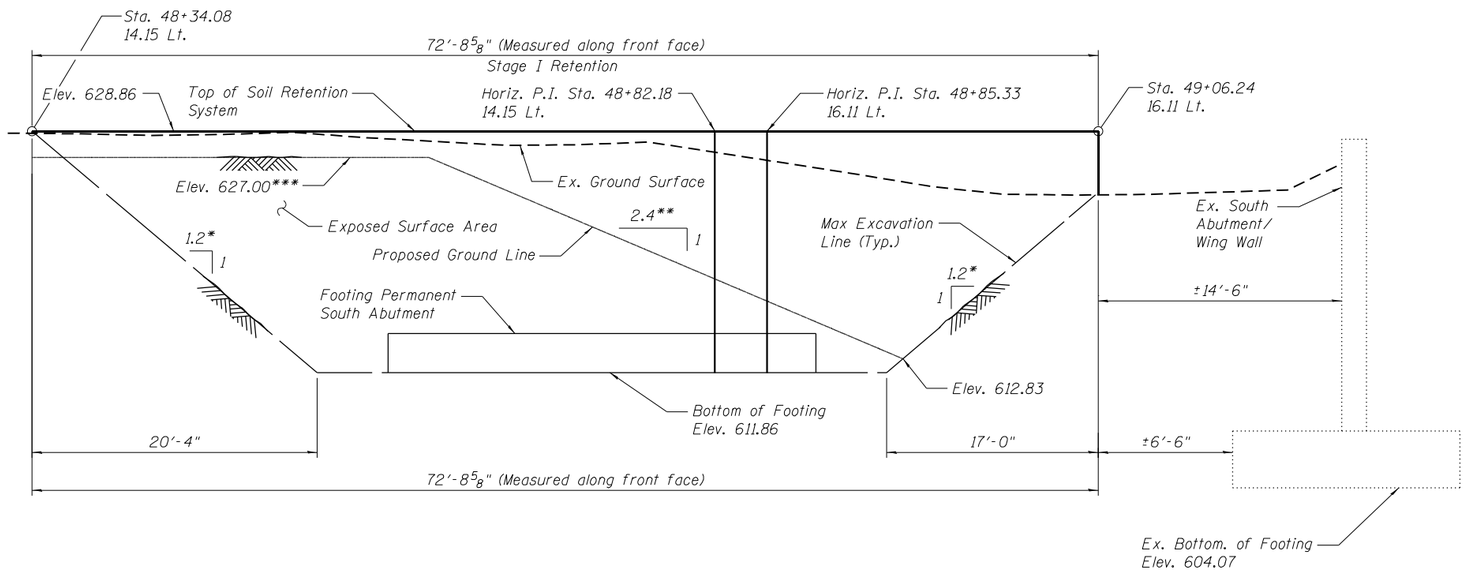

TEMPORARY SOIL RETENTION SYSTEM @ SOUTH ABUTMENT DETAIL

(Stations and Offsets given along front face)

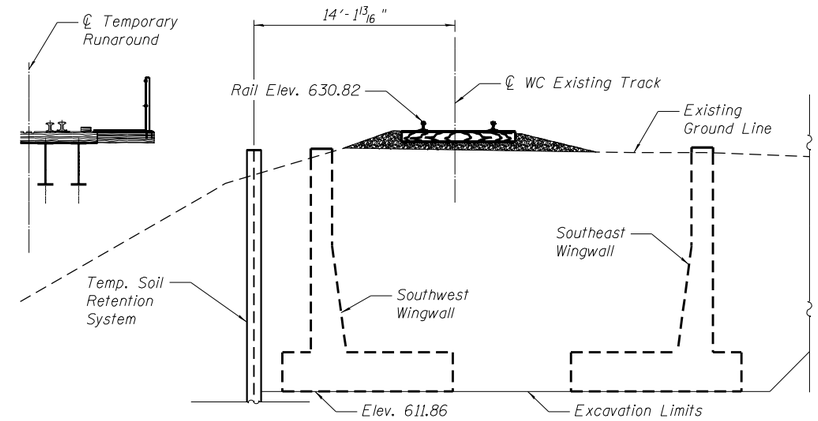

SECTION THRU EXCAVATION AT SOUTH ABUTMENT

(Looking North)

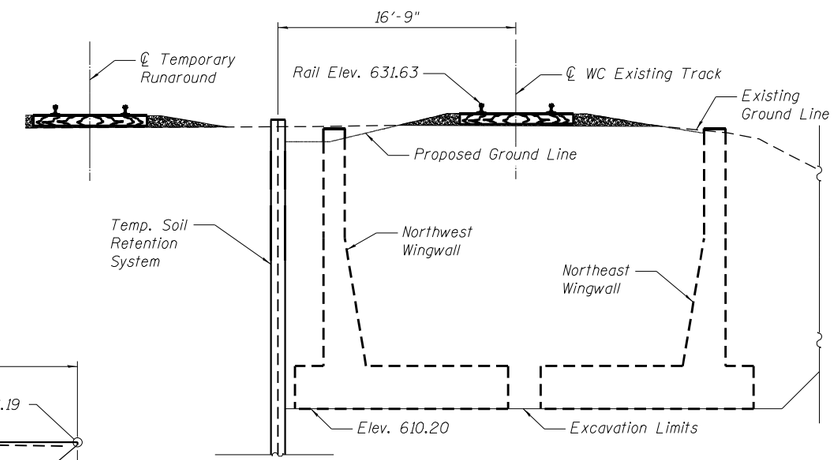

SECTION THRU EXCAVATION AT NORTH ABUTMENT

(Looking North)

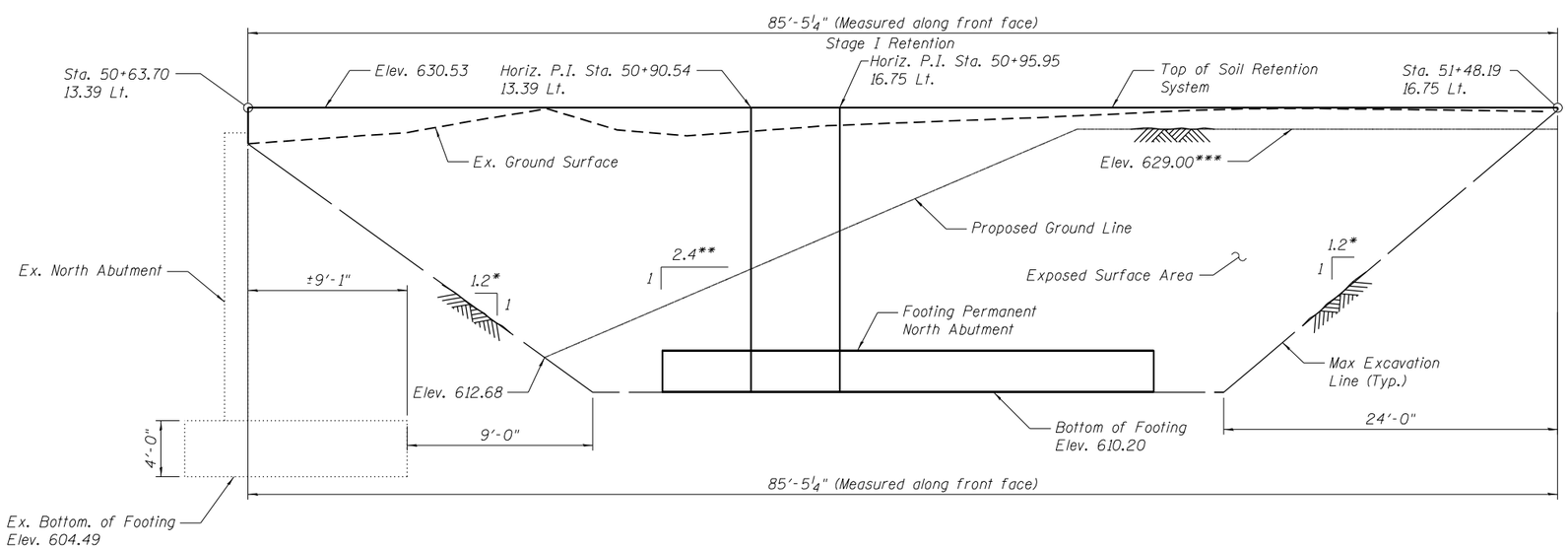

TEMPORARY SOIL RETENTION SYSTEM @ NORTH ABUTMENT DETAIL

(Stations and Offsets given along front face)

NOTES:

1.) A cantilevered sheet piling design does not appear feasible and additional members or other retention systems may be necessary. The Contractor shall submit a temporary soil retention system design including plan details and calculations for review and acceptance by the Engineer.

2.) Contractor to Cut Piling for Concrete Links & Roll-In.

3.) Maximum embedment depths from the bottom of footing are 7'-5" (North Abutment) and 9'-5" (South Abutment).

* 1:1 at Right L to FAI 80
** 2:1 at Right L to FAI 80
*** Estimated Final Grade, Final Grading by WC.

ORIGINAL: DLZ Illinois, Inc. UPDATED: LIN ENGINEERING, LTD. Consulting Engineers Springfield, Illinois		DESIGNED - ZJH	REVISED	STATE OF ILLINOIS DEPARTMENT OF TRANSPORTATION	TEMPORARY SOIL RETENTION SYSTEM STRUCTURE NO. 032-9906	F.A.I. RTE.	SECTION	COUNTY	TOTAL SHEETS	SHEET NO.
		CHECKED - PRD MTH	REVISED			80	(32, 47-4)VB, HBR-3) BR, BRR	GRUNDY	143	63
		DRAWN - BAE	REVISED					CONTRACT NO. 66295		
	DATE - 03/25/22	CHECKED - ZJH MTH	REVISED		SHEET NO. 6 OF 49 SHEETS		ILLINOIS	FED. AID PROJECT		

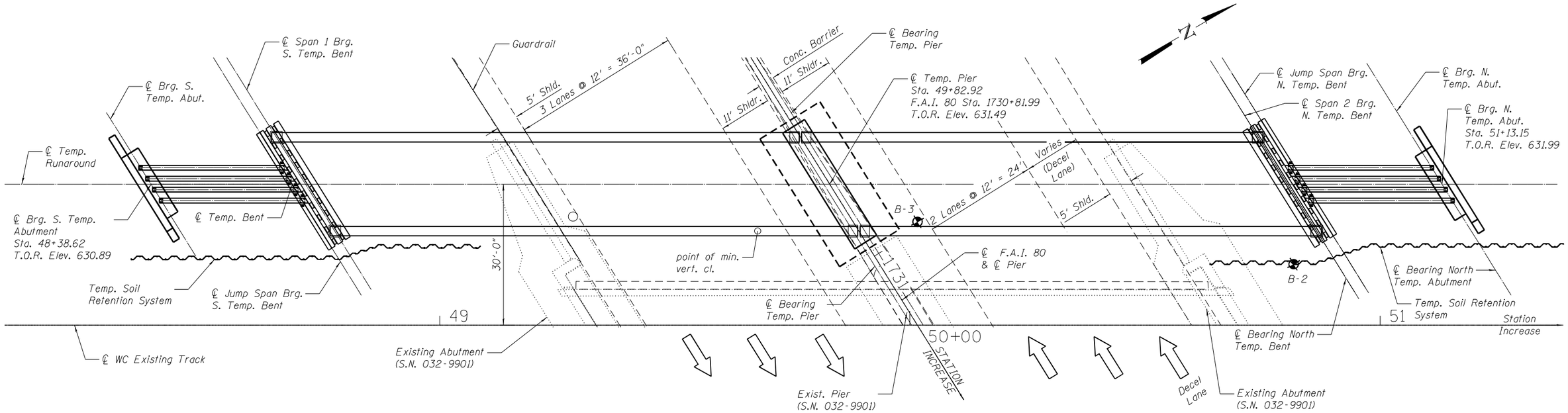

PLAN

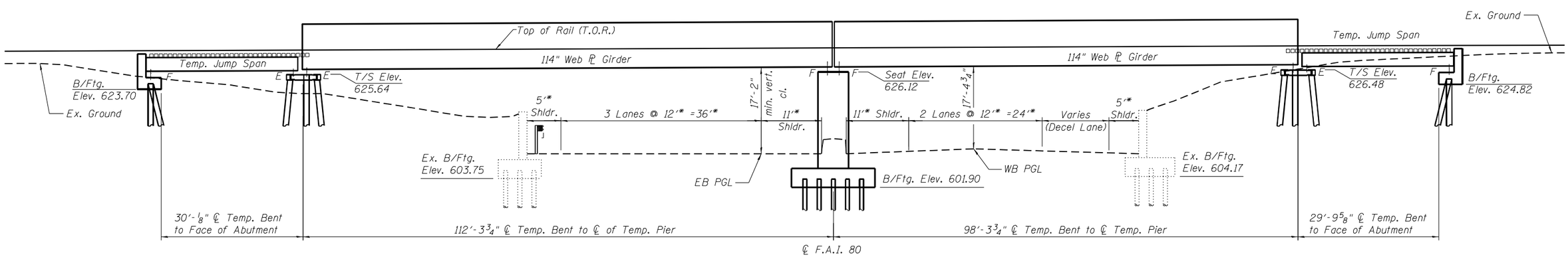

ELEVATION

* At Right L's to FAI 80

ORIGINAL: DLZ Illinois, Inc. UPDATED: LIN ENGINEERING LTD. Consulting Engineers Springfield, Illinois		DESIGNED - ZJH	REVISED	STATE OF ILLINOIS DEPARTMENT OF TRANSPORTATION	TEMPORARY RUNAROUND PLAN AND ELEVATION STRUCTURE NO. 032-9906	F.A.I. RTE.	SECTION	COUNTY	TOTAL SHEETS / SHEET NO.
		CHECKED - PRD MTH	REVISED			80	(32, 47-4)VB, HBR-3) BR, BRR	GRUNDY	143 / 64
		DRAWN - BAE	REVISED					CONTRACT NO. 66295	
	DATE - 03/25/22	CHECKED - ZJH MTH	REVISED		SHEET NO. 7 OF 49 SHEETS		ILLINOIS	FED. AID PROJECT	

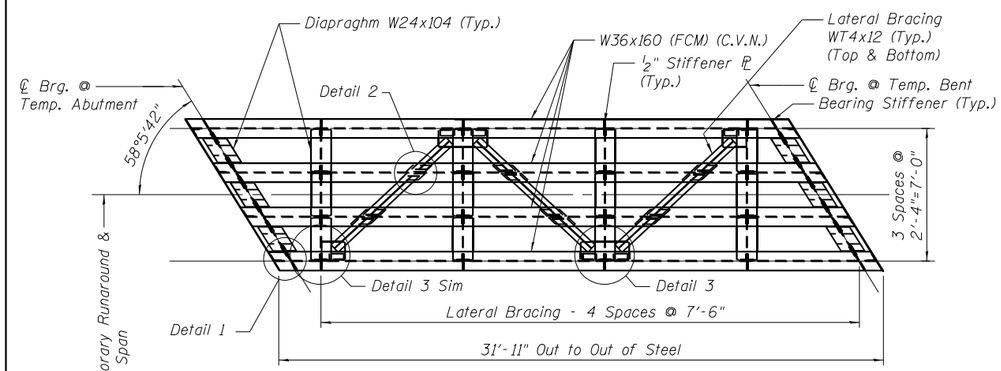

PLAN - JUMP SPAN

South Jump Span Shown
North Jump Span Similiar

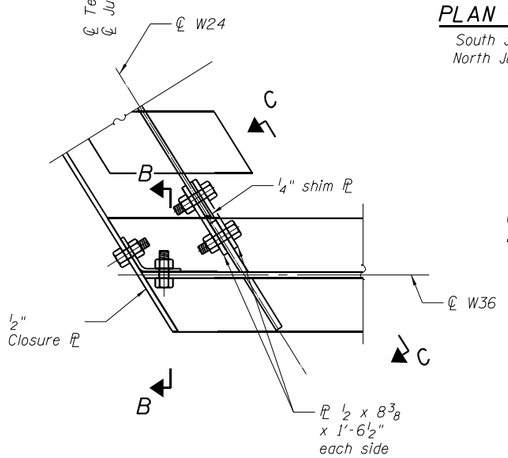

DETAIL 1

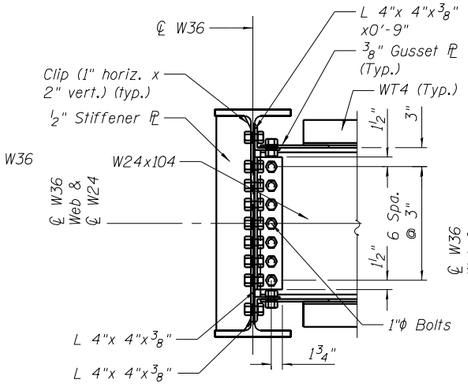

SECTION A-A

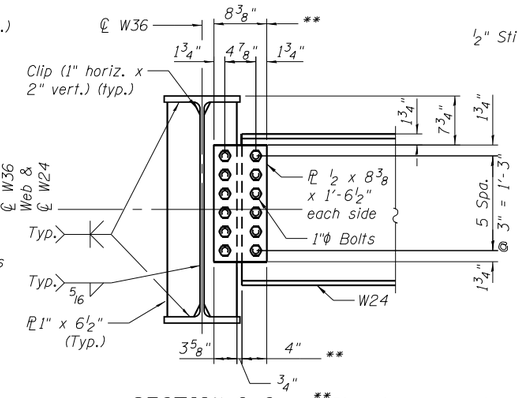

SECTION C-C

** Dimensions measured along ℄ W24 diaphragm

DETAIL 2

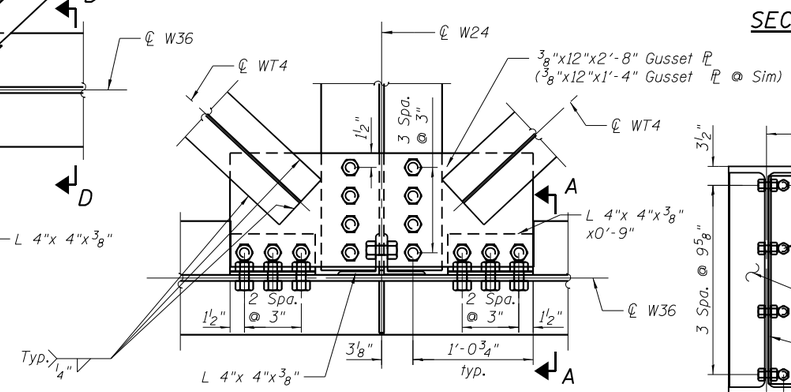

DETAIL 3

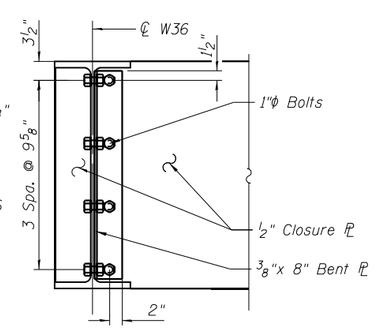

SECTION B-B

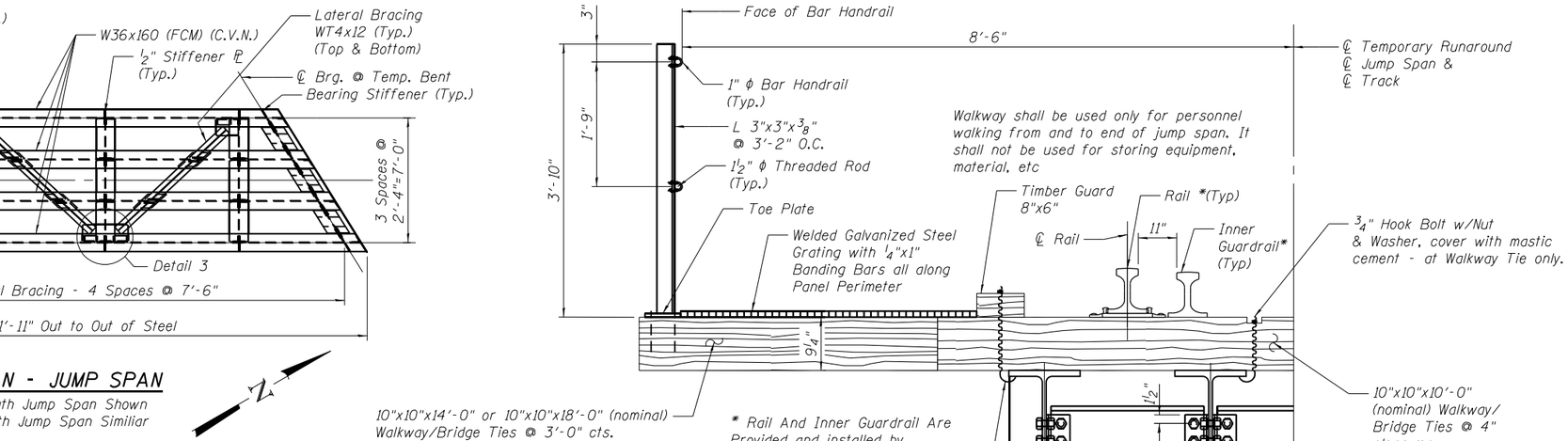

SECTION THRU JUMP SPAN

Looking Back Station:
East Half Shown, West Half Similiar

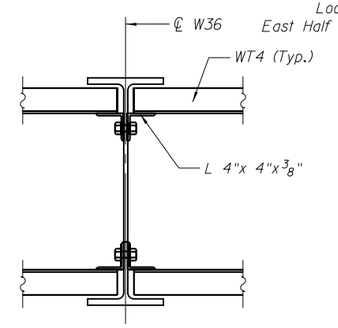

SECTION D-D

TIMBER TIES - MATERIAL PROPERTIES

Southern Pine - Grade No. 1 Dense
Modulus of Elasticity. $E = 1.5 \times 10^6$ psi
Bending. Fb Single Member = 1395 psi
Compression. Fc. Parallel to Grain = 880 psi
Compression. Fc. Perpendicular to Grain = 395 psi
Horizontal Shear. Fv = 150 psi
(Stress Allowables In Accordance With American Railway Engineering And Maintenance-Of-Way Association (Table 7-2-9)

Notes:

1. Connection Plates And Angles Shall Comform To AASHTO M270/ASTM A709 Grade 50.
2. All Connection Bolts Shall Conform To ASTM F3125 Grade A325, Type 1 (plain) Bolts 1" φ, holes 1 1/16" φ.
3. Charpy V-Notch (C.V.N.), see General Notes
4. Fracture Critical Member (F.C.M.)

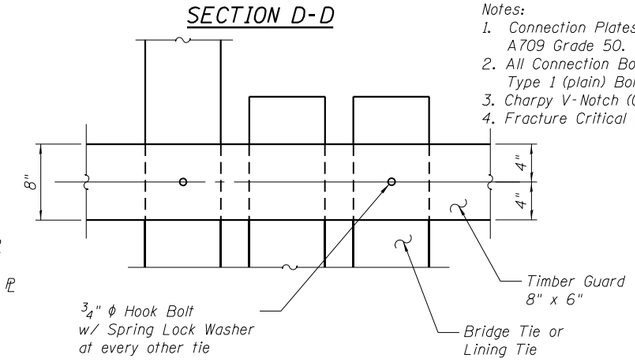

TIMBER GUARD DETAIL

ORIGINAL:	UPDATED:								
DLZ Illinois, Inc.	LIN ENGINEERING, LTD. Consulting Engineers Springfield, Illinois	DESIGNED - ZJH	REVISED	STATE OF ILLINOIS DEPARTMENT OF TRANSPORTATION	JUMP SPAN DETAILS STRUCTURE NO. 032-9906	F.A.I. RTE.	SECTION	COUNTY	TOTAL SHEETS / SHEET NO.
		CHECKED - PRD MTH	REVISED			80	((32, 47-4)VB, HBR-3) BR, BRR	GRUNDY	143 / 65
		DRAWN - BAE	REVISED					CONTRACT NO. 66295	
	DATE - 03/25/22	CHECKED - ZJH MTH	REVISED		SHEET NO. 8 OF 49 SHEETS			ILLINOIS FED. AID PROJECT	

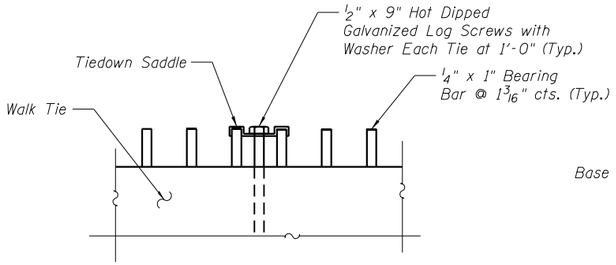

WALKWAY GRATING ATTACHMENT

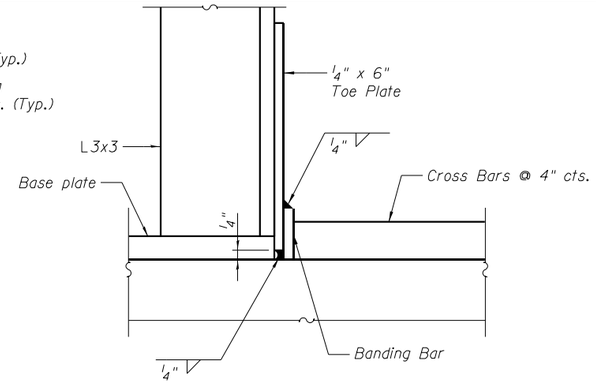

WALKWAY TOE PLATE DETAIL

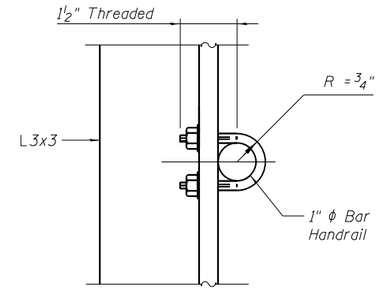

SECTIONAL PLAN

WALKWAY HANDRAIL ATTACHMENT

JUMP SPAN BILL OF MATERIAL*

Steel Bearing Assembly	Each	16
Furnishing and Erecting Structural Steel ***	L. Sum	1
Walkway Grating	Foot	164
Timber Guards	Foot	156
Handrail	Foot	164
Ties **	Foot	81

* All items in this Bill of Materials are included in the lump sum cost of "TEMPORARY JUMP SPAN" Quantities include material for both north and south Jump Spans.

** Ties are measured along centerline of track and include all ties of the sizes as indicated on the plans necessary for a complete operational system acceptable to the Wisconsin Central, Ltd.

*** Calculated weight of structural steel 57,490 pounds.

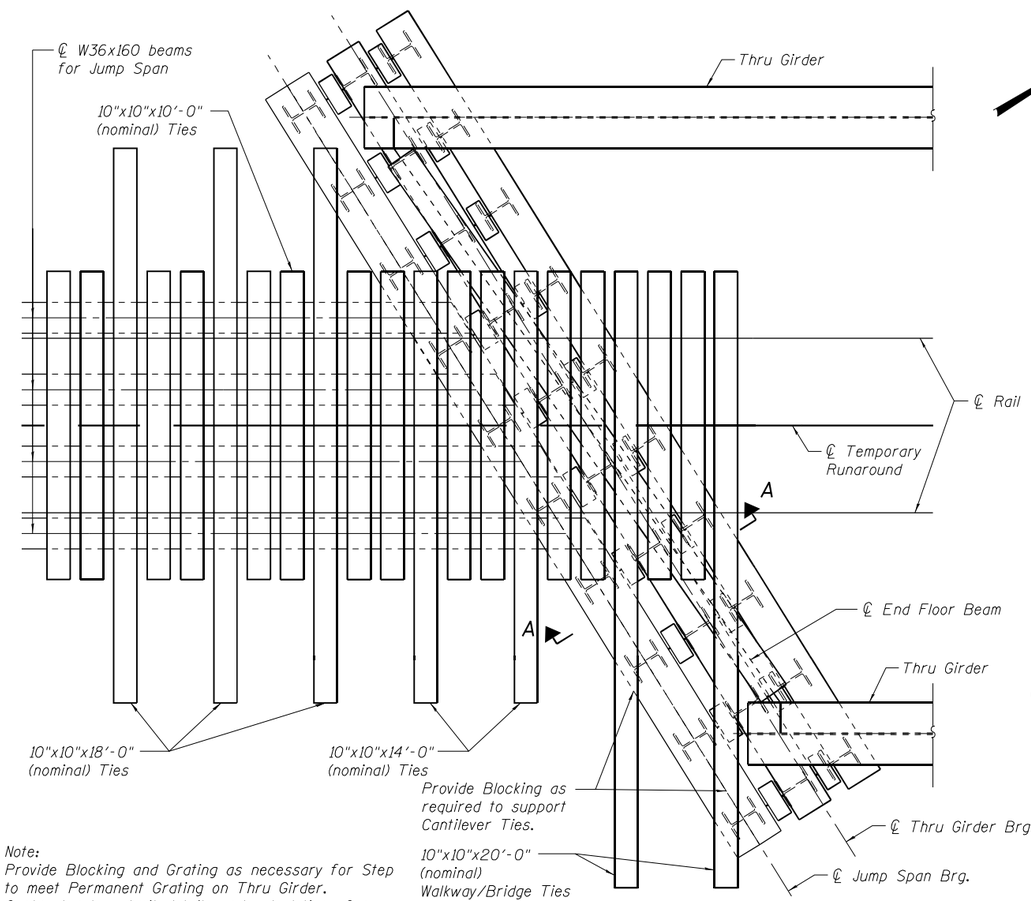

PARTIAL PLAN

Note:
Provide Blocking and Grating as necessary for Step to meet Permanent Grating on Thru Girder. Contractor to submit details and calculations for Blocking and Grating sealed by an Illinois Licensed Structural Engineer. Cost included with Temporary Jump Span.

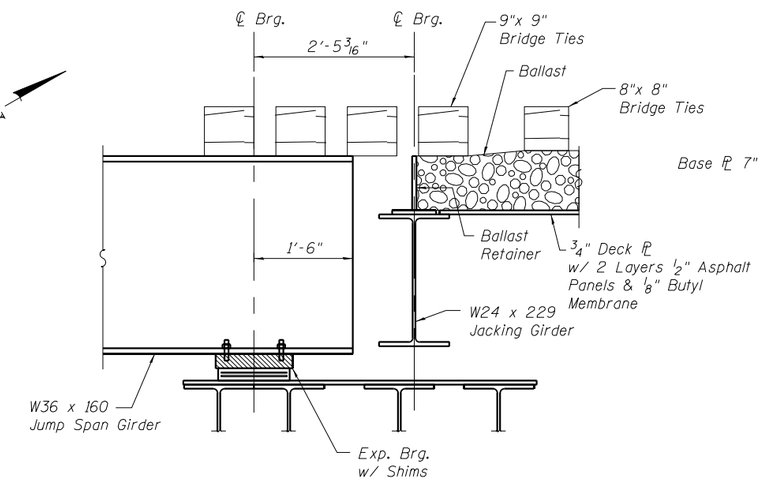

SECTION A-A

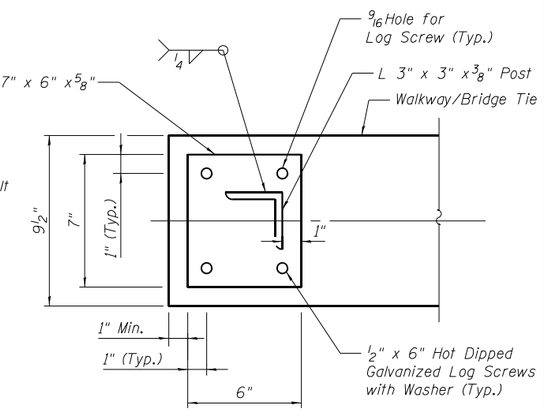

WALKWAY BASE PLATE DETAIL

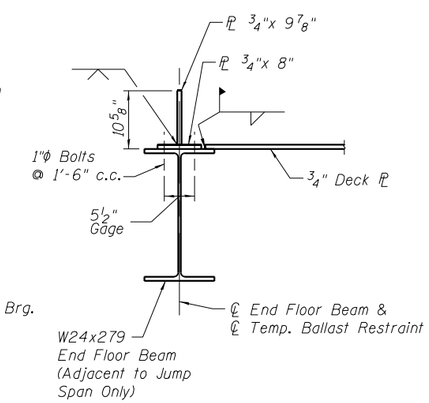

BALLAST RETAINER DETAIL

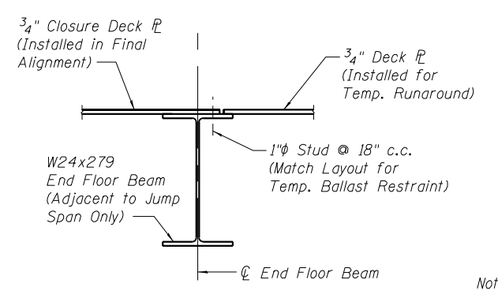

CLOSURE DECK DETAIL

(After Roll-in Complete)

Notes:

1. Cost of Walkway posts, and handrail included in cost of Temporary Jump Span.
2. Ballast, Asphalt Panels and Butyl Rubber Membrane not shown for clarity.
3. Temporary Ballast Restraint shall be removed prior to Roll-in.

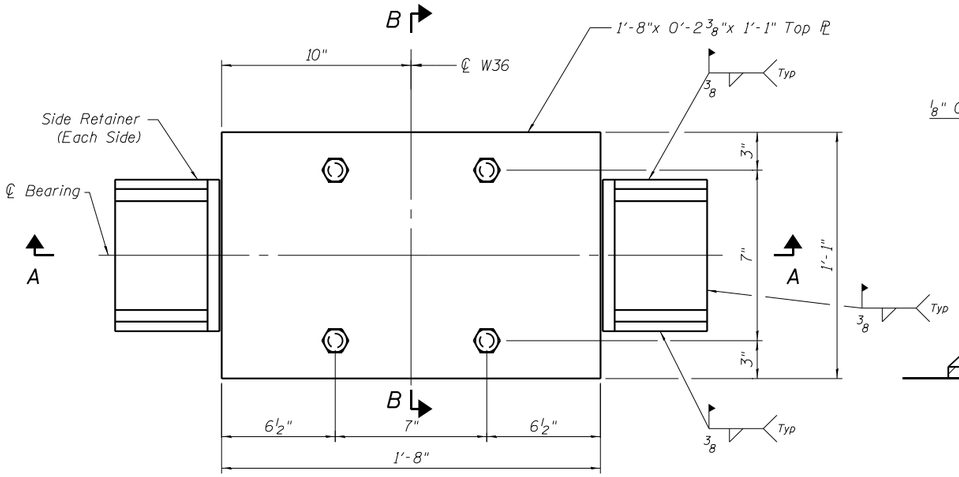

PLAN VIEW
EXPANSION BEARING

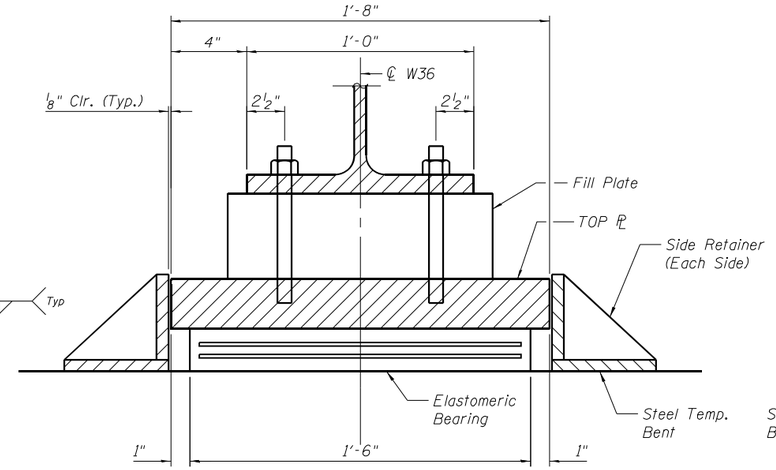

SECTION A-A

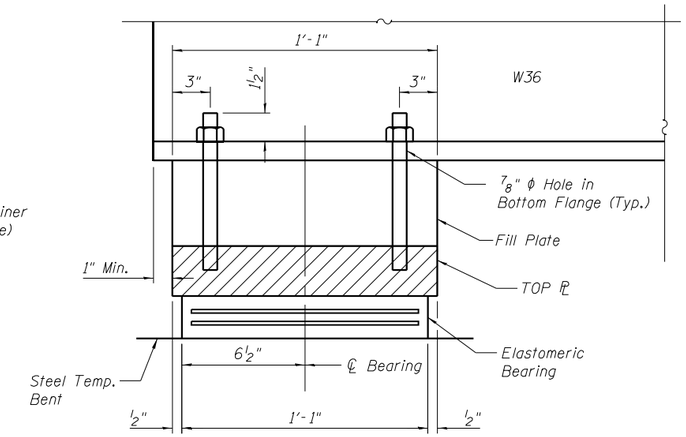

SECTION B-B

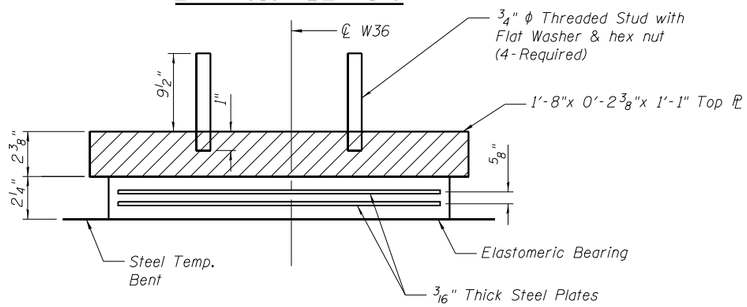

TOP PLATE DETAIL

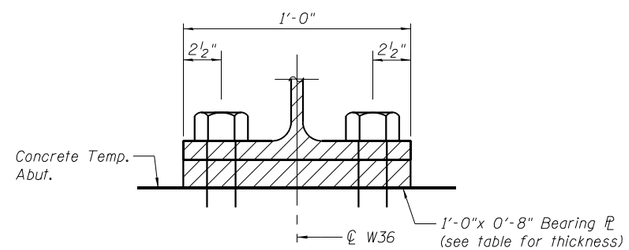

SECTION C-C

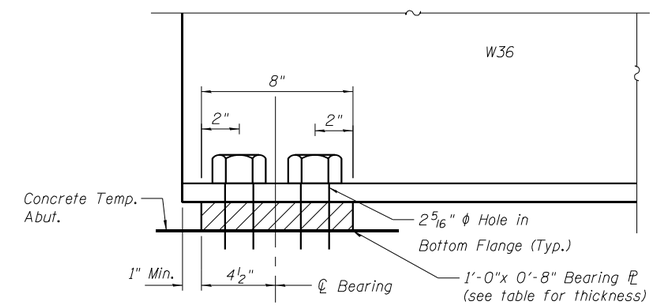

SECTION D-D

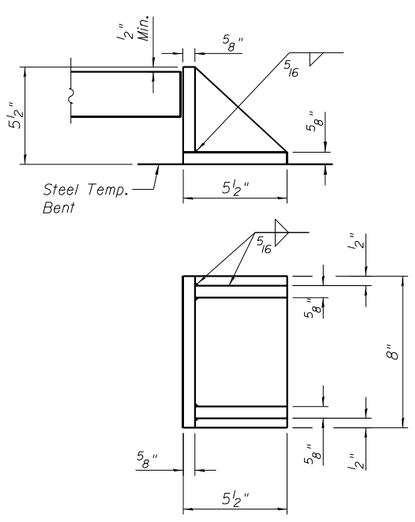

SIDE RETAINER

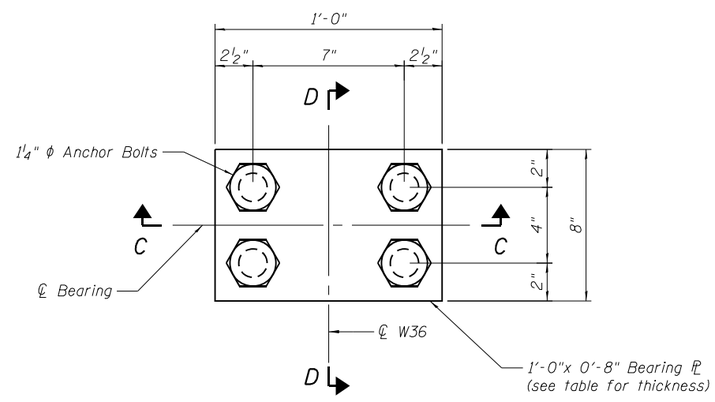

PLAN VIEW
FIXED BEARING

BEARING LOCATION	Beam			
	1	2	3	4
South Temp. Abutment	1 1/2"	1 1/2"	1 5/8"	1 3/4"
North Temp. Abutment	1 1/2"	1 1/2"	1 5/8"	1 5/8"

FIXED BEARING PLATE THICKNESSES

BEARING LOCATION	Fill Plate			
	Beam			
	1	2	3	4
South Temp. Bent	6 1/2"	6 5/8"	6 5/8"	6 3/4"
North Temp. Bent	7 1/4"	7 1/4"	7 3/8"	7 3/8"

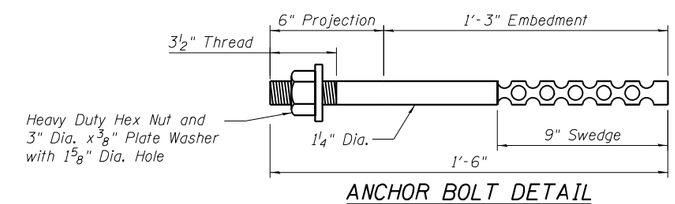

ANCHOR BOLT DETAIL

Notes:
1. All Structural Steel Bearing Plates shall be flat rolled steel plates with all surfaces smooth and free from warp and all edges smooth, straight and vertical.
2. All plate cuts shall be machine or machine flame cuts.
3. Material for Jump Span Bearings Cost included with Temporary Jump Span.
4. For Bill of Material see "Jump Span Details", sheet 9.

BILL OF MATERIAL*

Bar	No.	Size	Length	Shape
h (E)	18	#6	25'-8"	
h_1(E)	4	#6	2'-4"	
h_2(E)	8	#6	4'-8"	
h_3(E)	14	#6	15'-8"	
s (E)	26	#5	9'-11"	
s_1(E)	52	#5	4'-6"	
v (E)	32	#6	6'-0"	
v_1(E)	72	#6	5'-2"	
Structure Excavation		Cu. Yd.	75	
Concrete Structures		Cu. Yd.	25.0	
Reinforcement Bars, Epoxy Coated		Pound	2,460	
Furnishing Steel Piles, HP12X84		Foot	560	
Driving Piles		Foot	560	
Test Pile, Steel HP12X84		Each	2	
Pile Shoes		Each	16	

* Quantities include both the North & South Temporary Abutments.

All items in this Bill of Material are included in the lump sum cost of "TEMPORARY SUBSTRUCTURES"

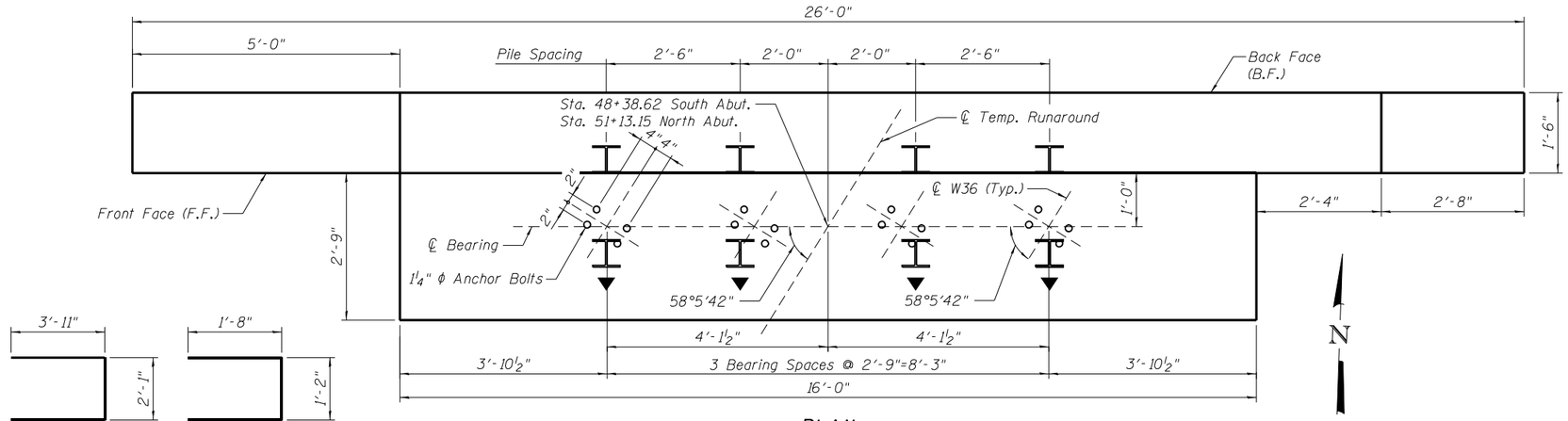

PLAN
North Abutment Shown
South Abutment Similar

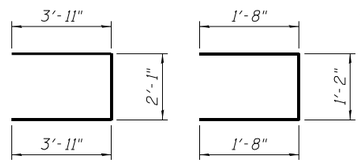

s(E) BAR **s_1(E) BAR**

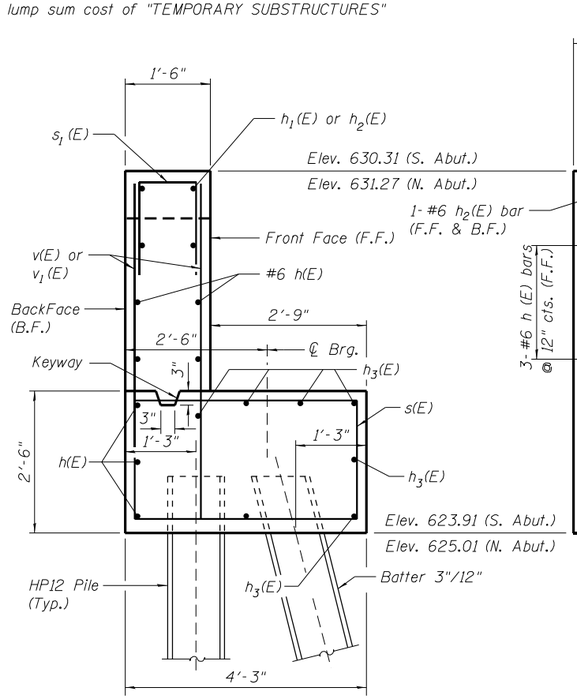

SECTION THRU ABUTMENT

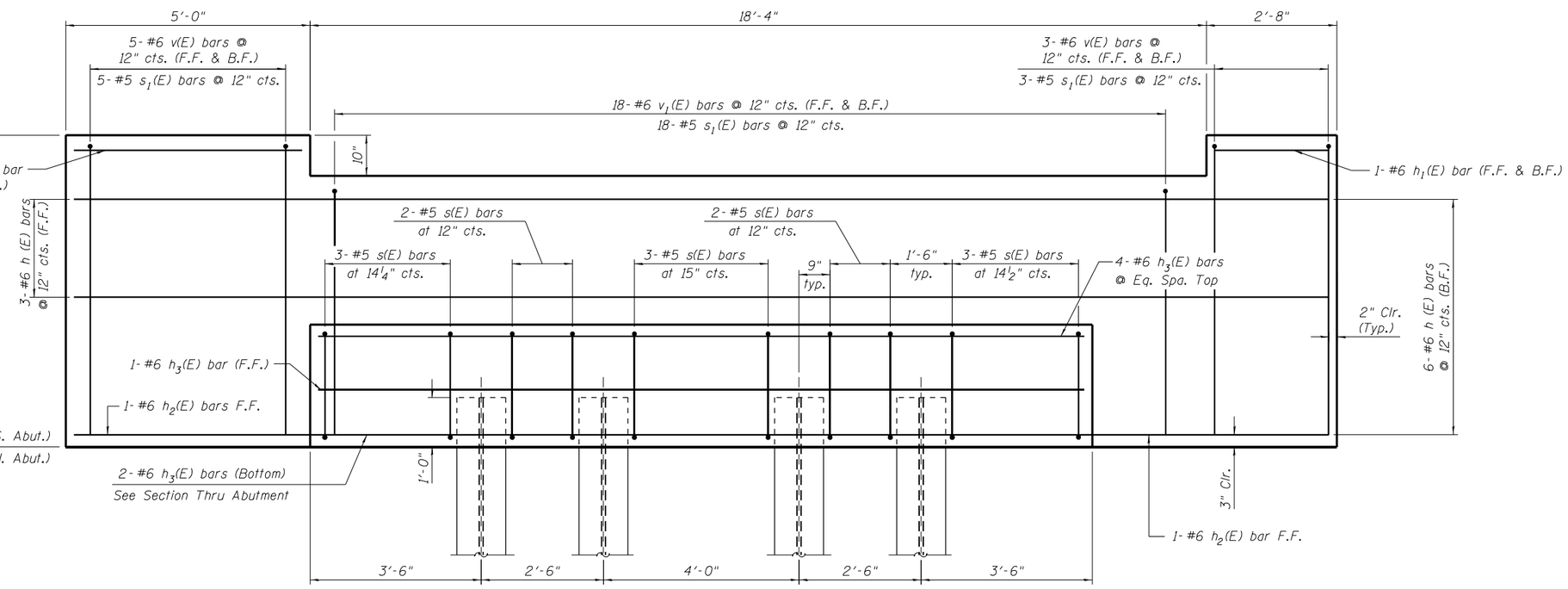

ELEVATION
North Abutment Shown (Looking North);
South Abutment Similar (Looking South)

SOUTH PILE DATA
Type: HP 12x84 with Pile Shoes
Nominal Required Bearing: 237 Kips
Allowable Resistance Available: 79 Kips
Est. Length: 40
No. Production Piles: 7
No. Test Piles: 1

NORTH PILE DATA
Type: HP 12x84 with Pile Shoes
Nominal Required Bearing: 205 Kips
Allowable Resistance Available: 68 Kips
Est. Length: 40
No. Production Piles: 7
No. Test Piles: 1

PILE LEGEND
Battered Pile
Plumb Pile

Notes:
For HP Pile Details, see sheet 47 of 49.

ORIGINAL:	UPDATED:								
DLZ Illinois, Inc.	LIN ENGINEERING LTD. Consulting Engineers Springfield, Illinois	DESIGNED - ZJH	REVISED	STATE OF ILLINOIS DEPARTMENT OF TRANSPORTATION	TEMPORARY ABUTMENTS STRUCTURE NO. 032-9906	F.A.I. RTE.	SECTION	COUNTY	TOTAL SHEETS / SHEET NO.
		CHECKED - PRD MTH	REVISED			80	((32. 47-4)VB, HBR-3) BR, BRR	GRUNDY	143 / 68
		DRAWN - BAE	REVISED					CONTRACT NO. 66295	
	DATE - 03/25/22	CHECKED - ZJH MTH	REVISED		SHEET NO. 11 OF 49 SHEETS		ILLINOIS	FED. AID PROJECT	

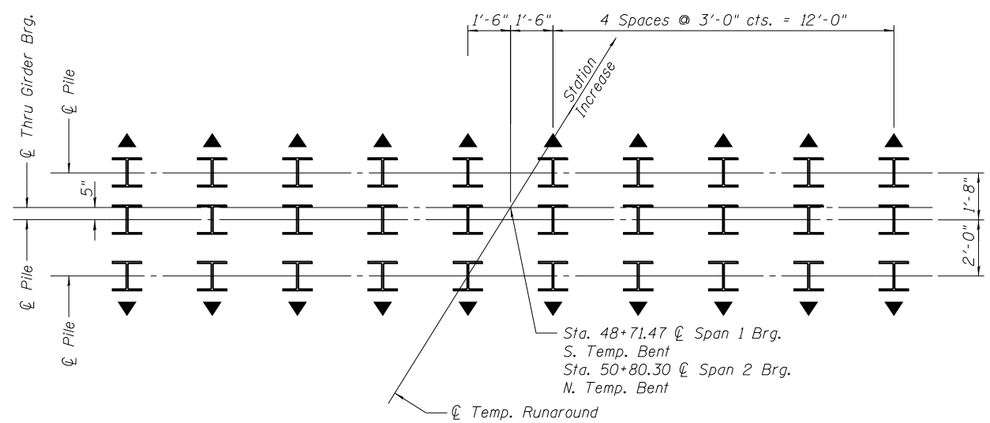

PILE PLAN

Dimensions shown at top of piles.
South Temporary Bent shown.
North Temporary Bent Similiar.

N

PILE LEGEND

Battered Pile

Plumb Pile

TEMPORARY BENT BILL OF MATERIAL*

Structure Excavation	Cu. Yd.	23.8
Furnishing Steel Piles, HP12X84	Foot	3451
Driving Piles	Foot	3451
Test Pile, Steel HP12X84	Each	2
Pile Shoes	Each	60

* Quantities include both the North & South Temporary Bents. The Temporary quantitiy includes 45,150 lbs. of structural steel, total for two spans. This quanitity is not included in the quantity shown for structural steel shown in General Note number 2 on the General Data sheet (Sheet 2).

All items in this Bill of Material are included in the lump sum cost of "TEMPORARY SUBSTRUCTURES"

SOUTH TEMP. PILE DATA

Type: HP 12 x 84 with Pile Shoes
Nominal Required Bearing: 318 kips
Allowable Resistance Available: 106 kips
Est. Embedment Length: 52 ft.
Est. Total Length: 58 ft.
No. Production Piles: 29
No. Test Piles: 1

NORTH TEMP. PILE DATA

Type: HP 12 x 84 with Pile Shoes
Nominal Required Bearing: 292 kips
Allowable Resistance Available: 97 kips
Est. Embedment Length: 55 ft.
Est. Total Length: 61 ft.
Production Piles: 29
No. Test Piles: 1

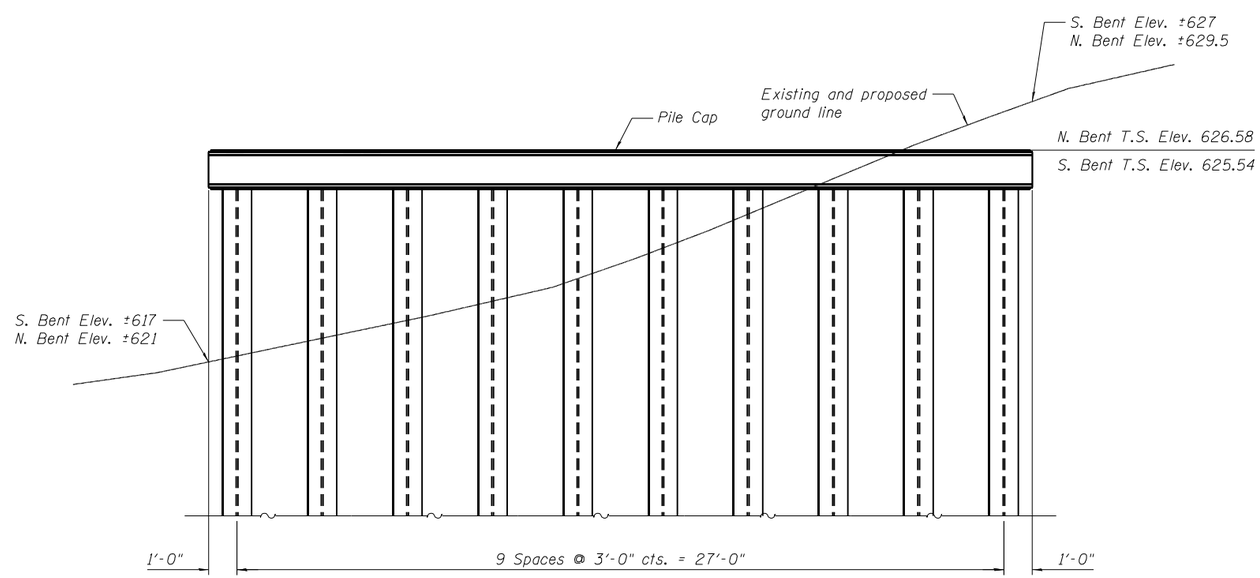

ELEVATION

(Looking North)

Notes:
For HP Pile Details see sheet 47 of 49.

ORIGINAL: DLZ Illinois, Inc.	UPDATED: LIN ENGINEERING, LTD. Consulting Engineers Springfield, Illinois	DESIGNED - ZJH	REVISED
		CHECKED - PRD MTH	REVISED
		DRAWN - BAE	REVISED
	DATE - 03/25/22	CHECKED - ZJH MTH	REVISED

STATE OF ILLINOIS
DEPARTMENT OF TRANSPORTATION

TEMPORARY BENT DETAILS
STRUCTURE NO. 032-9906

SHEET NO. 12 OF 49 SHEETS

F.A.I. RTE.	SECTION	COUNTY	TOTAL SHEETS	SHEET NO.
80	((32, 47-4)VB, HBR-3) BR, BRR	GRUNDY	143	69
		CONTRACT NO. 66295		
		ILLINOIS	FED. AID PROJECT	

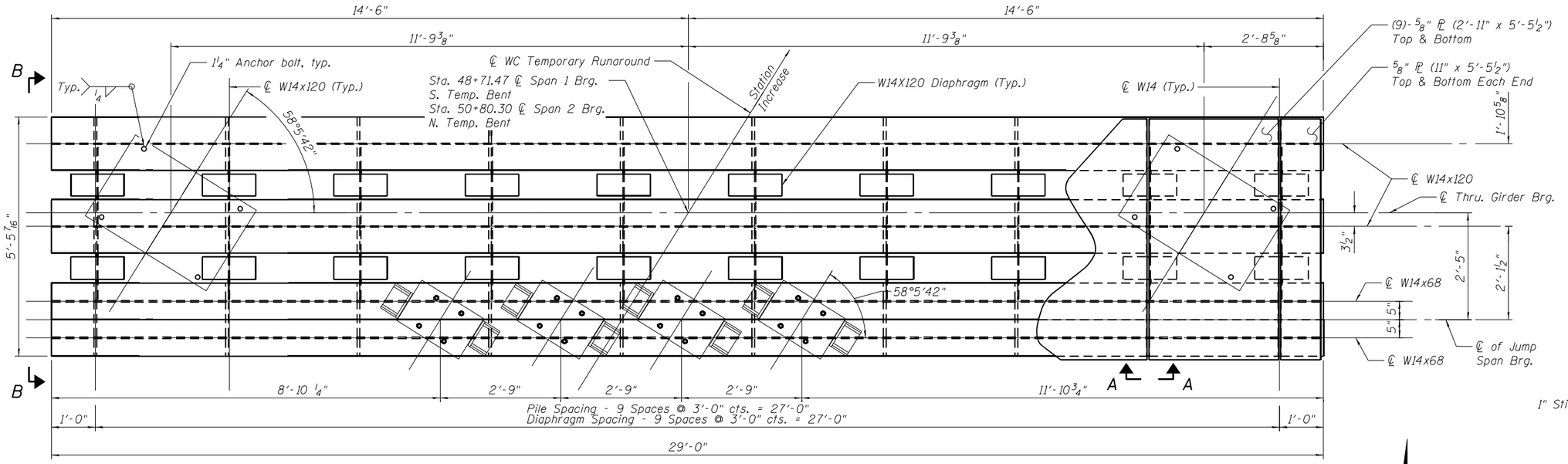

PLAN

South Temporary Bent Shown
North Temporary Bent Similar

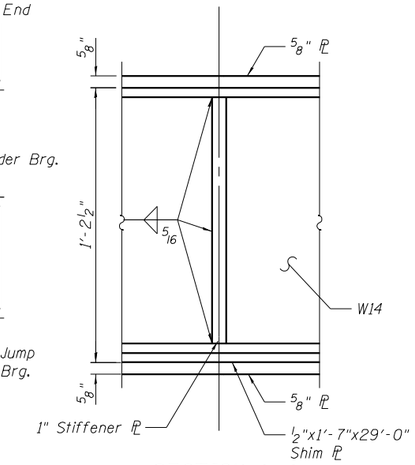

SECTION A-A

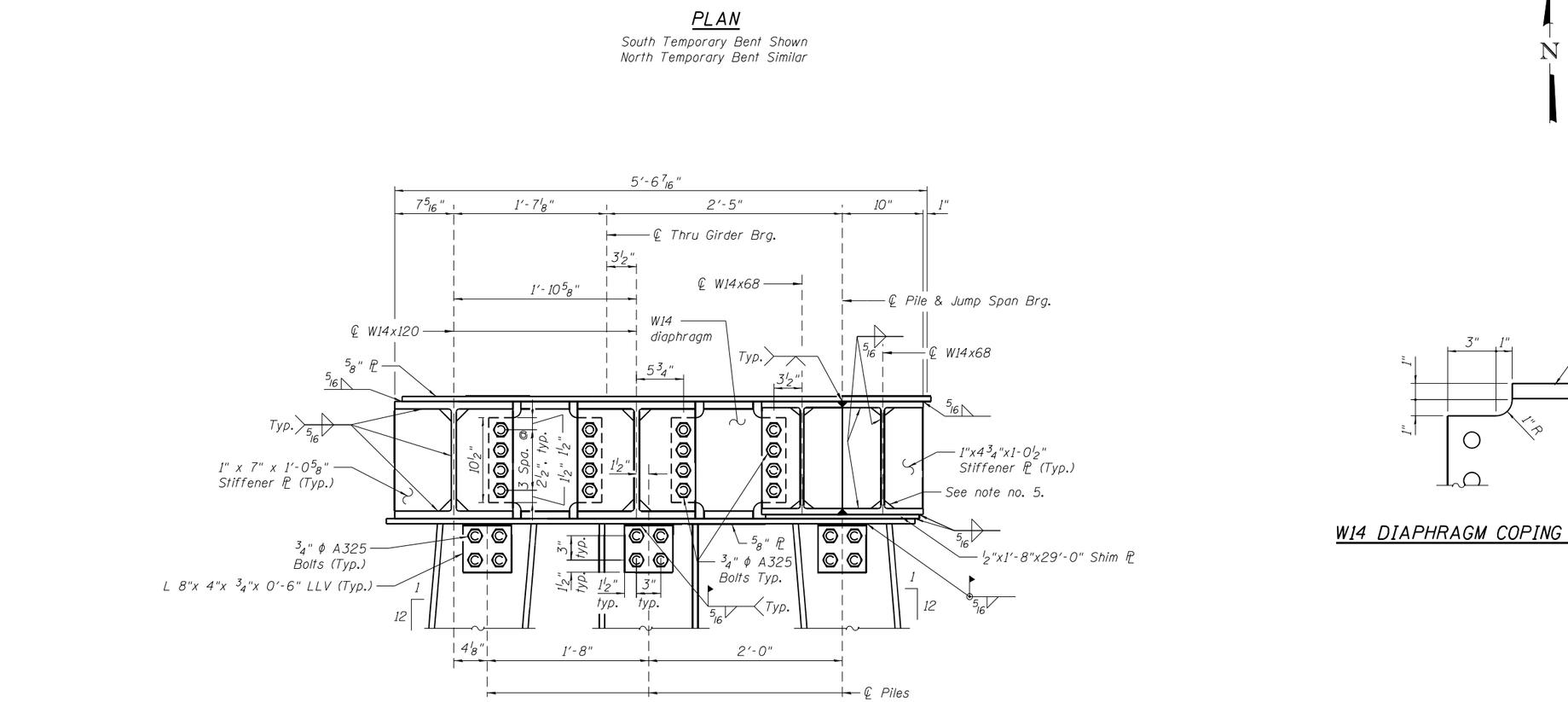

SECTION B-B

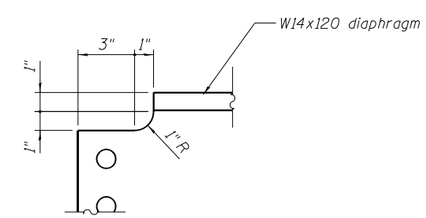

W14 DIAPHRAGM COPING DETAIL

Notes:

1. Cut & Grind Piles after Driving to Required Elevation. Cost included in the lump sum cost of "TEMPORARY SUBSTRUCTURES".
2. Field Verify Pile Locations prior to Welding 3/4" Conn. Plates to Bent Frame.
3. Weld Studs Shall Conform To ASTM A449.
4. Bolts 3/4" ϕ. holes 13/16" ϕ.
5. Clip interior corners of all stiffener plates:
   W14x120 - 2" horiz. x 2" vert.
   W14x68 - 1 1/4" horiz. x 1" vert.

ORIGINAL: DLZ Illinois, Inc. UPDATED: LIN ENGINEERING LTD. Consulting Engineers Springfield, Illinois		DESIGNED - ZJH	REVISED	STATE OF ILLINOIS DEPARTMENT OF TRANSPORTATION	TEMPORARY BENT CAP DETAILS STRUCTURE NO. 032-9906	F.A.I. RTE.	SECTION	COUNTY	TOTAL SHEETS / SHEET NO.
		CHECKED - PRD MTH	REVISED			80	(32, 47-4)VB, HBR-3) BR, BRR	GRUNDY	143 / 70
		DRAWN - BAE	REVISED					CONTRACT NO. 66295	
	DATE - 03/25/22	CHECKED - ZJH MTH	REVISED		SHEET NO. 13 OF 49 SHEETS		ILLINOIS	FED. AID PROJECT	

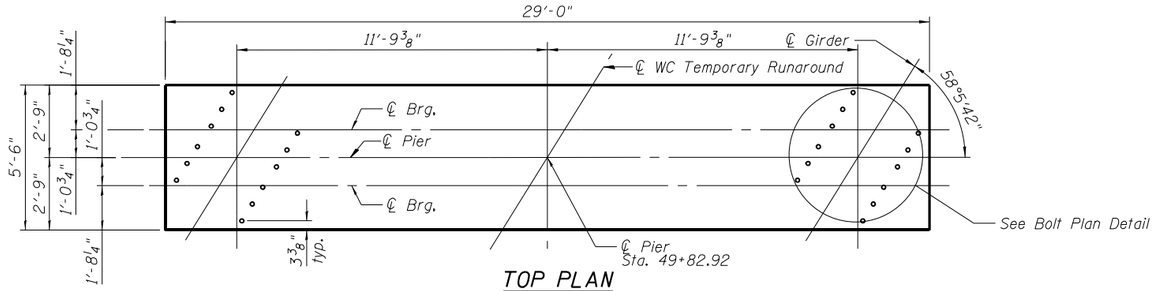

TOP PLAN

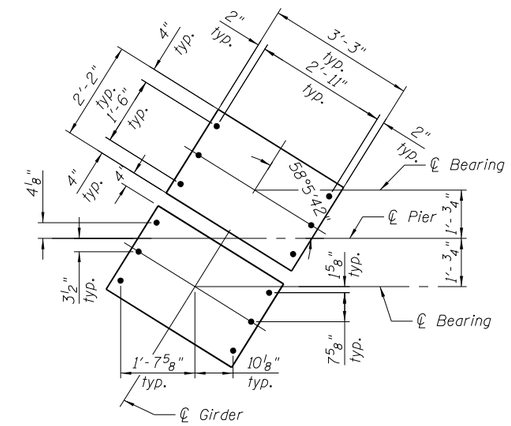

BOLT PLAN DETAIL

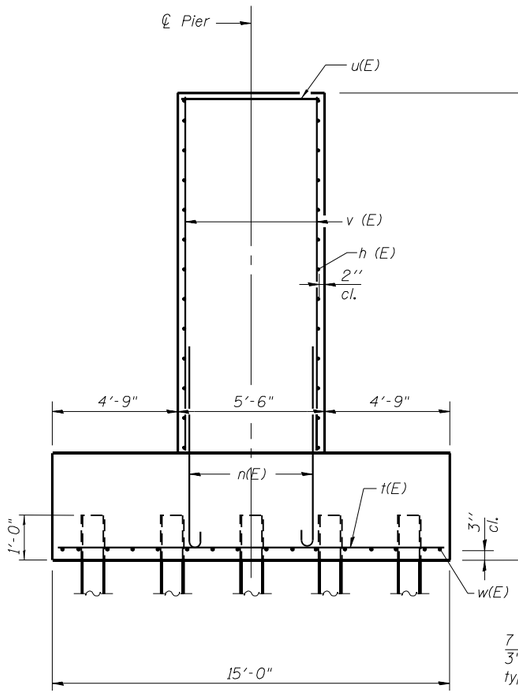

END VIEW

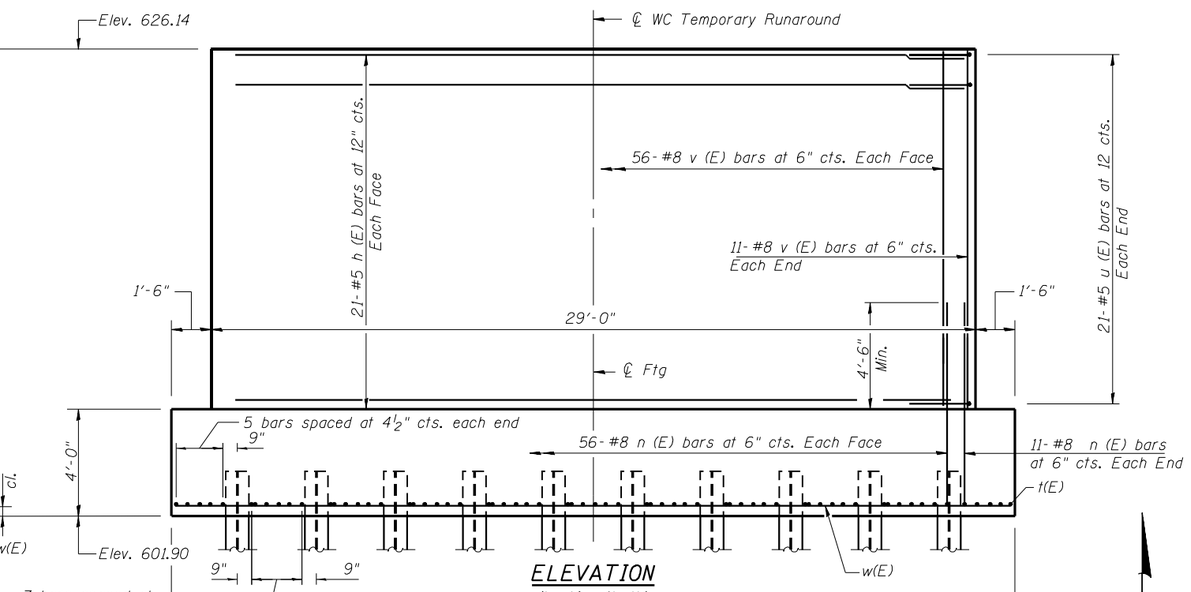

ELEVATION

(Looking North)

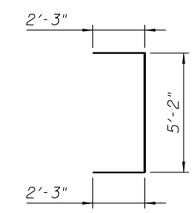

BAR u (E)

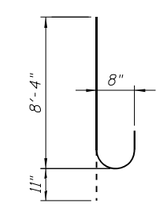

BAR n (E)

BILL OF MATERIAL

Bar	No.	Size	Length	Shape
h (E)	42	#5	28'-8"	
n (E)	134	#8	9'-3"	
u (E)	62	#5	9'-8"	
t (E)	73	#9	14'-8"	
v (E)	134	#8	20'-0"	
w (E)	16	#8	31'-8"	
Structure Excavation	Cu. Yd.		190.0	
Concrete Structures	Cu. Yd.		188.7	
Reinforcement Bars, Epoxy Coated	Pound		17,370	
Furnishing Steel Piles HP12x84	Foot		2,793	
Driving Piles	Foot		2,793	
Test Pile, Steel HP12x84	Each		1	
Pile Shoes	Each		50	
Anchor Bolts, 1 1/4"	Each		24	

All items in this Bill of Materials are included in the lump sum cost of "TEMPORARY SUBSTRUCTURES"

PILE DATA

Type: HP12x84 with Pile Shoes
Nominal Required Bearing: 339 Kips
Factored Resistance Available: 113 Kips
Est. Length: 56 ft
No. Production Piles: 49
No. Test Piles: 1

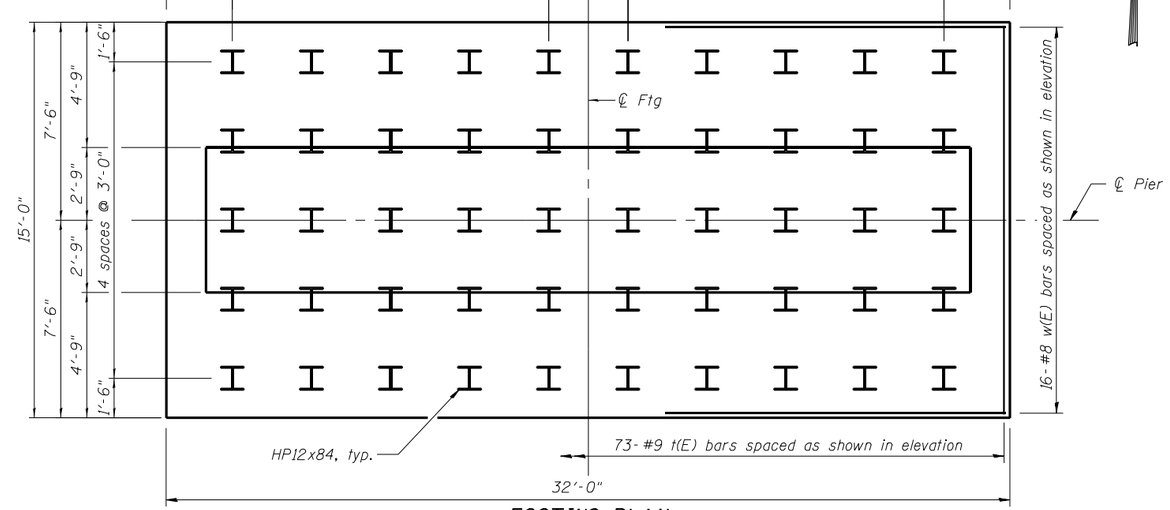

FOOTING PLAN

Notes:
Space reinforcement in cap to miss anchor bolts.
For details of HP piles, see sheet 47 of 49.
Coordinate anchor bolt removal with track for Roll-in process.
For Bearing details see sheets 32-36 of 49.

ORIGINAL:	UPDATED:							
DLZ Illinois, Inc.	LIN ENGINEERING, LTD. Consulting Engineers Springfield, Illinois		DESIGNED - ZJH	REVISED	STATE OF ILLINOIS DEPARTMENT OF TRANSPORTATION	TEMPORARY PIER STRUCTURE NO. 032-9906	F.A.I. RTE. 80	SECTION ((32, 47-4)VB, HBR-3) BR, BRR
			CHECKED - PRD MTH	REVISED			COUNTY GRUNDY	TOTAL SHEETS 143
			DRAWN - RG	REVISED			SHEET NO. 71	CONTRACT NO. 66295
		DATE - 03/25/22	CHECKED - ZJH MTH	REVISED		SHEET NO. 14 OF 49 SHEETS	ILLINOIS	FED. AID PROJECT

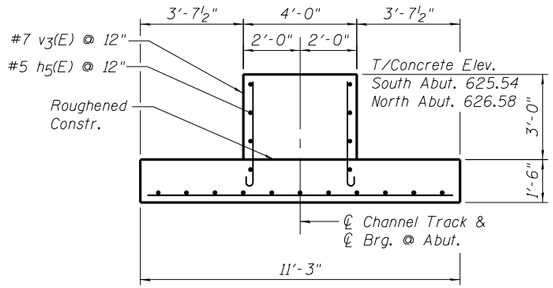

SECTION C-C

(See Sheet 4 - Sequence of Construction - Stage II)
Maximum Applied Service Bearing Pressure = Qmax = 1.7 tsf.

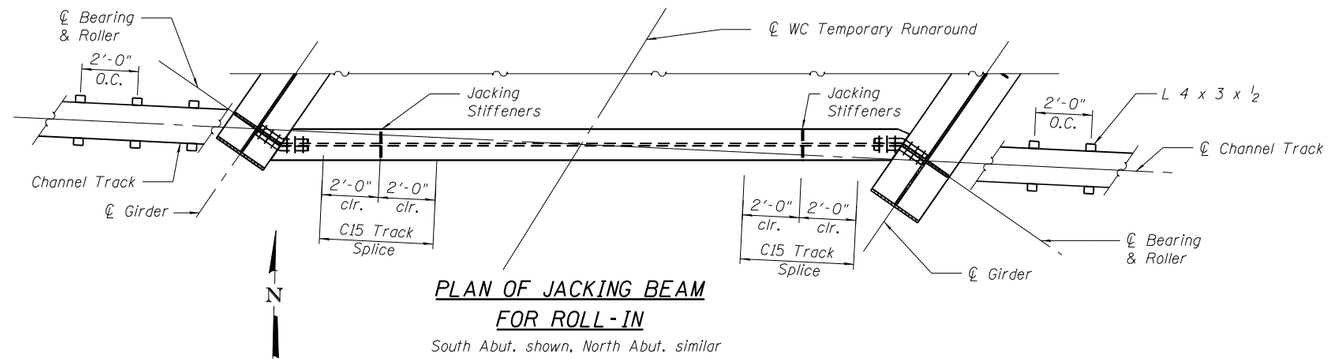

PLAN OF JACKING BEAM FOR ROLL-IN

South Abut. shown, North Abut. similar

BILL OF MATERIAL*

Bar	No.	Size	Length	Shape
$h_5(E)$	12	#5	6'-4"	
$h_6(E)$	42	#5	2'-6"	
$s_2(E)$	21	#4	15'-6"	
$v_3(E)$	28	#7	4'-10"	
$w_1(E)$	16	#6	10'-11"	
$w_2(E)$	25	#6	6'-4"	
$w_3(E)$	1	#6	6'-2"	
$w_4(E)$	1	#6	5'-7"	
$w_5(E)$	1	#6	5'-2"	
$w_6(E)$	1	#6	10'-5"	
$w_7(E)$	1	#6	9'-2"	
Rollers		Each	8	
C15x33.9 Track		Foot	276	
¾"x 15" Plate		Foot	276	
Guide Clips		Each	280	
Concrete Structures		Cu. Yd.	25.9	
Holes Drilled		Each	6	
Expansion Bolts, ¾"		Each	560	
Reinforcement Bars, Epoxy Coated		Pound	1,240	

* All items in this Bill of Materials are included in the lump sum cost of "BRIDGE ROLL-IN"

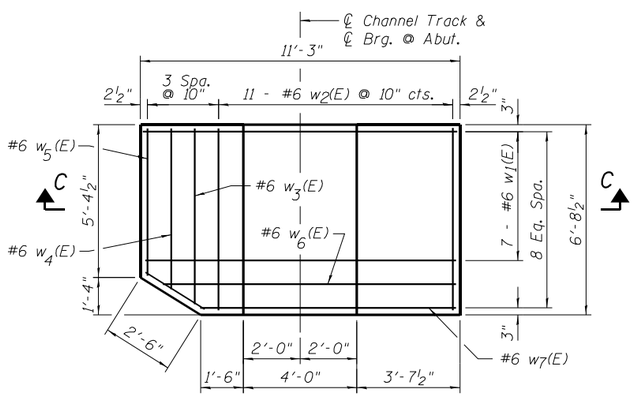

TEMP. CONCRETE LINK AT SOUTH ABUTMENT PLAN

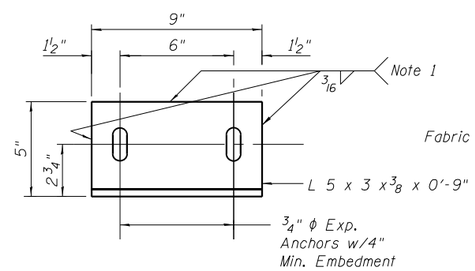

Note:
1. Weld required on Temporary Bent Only.

DETAIL OF GUIDE ANGLE

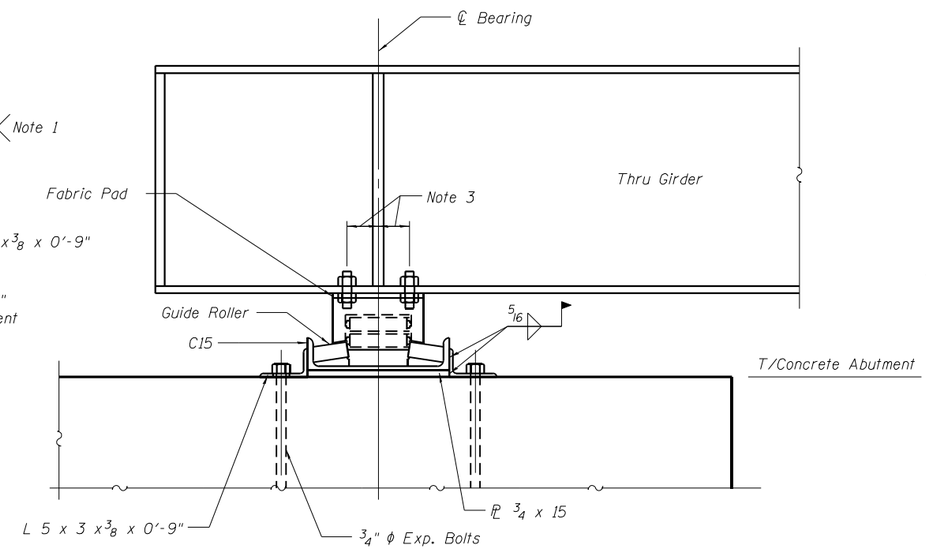

ROLLER DETAIL

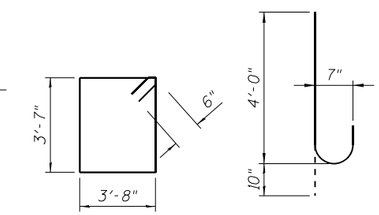

BAR $s_2(E)$ BAR $v_3(E)$

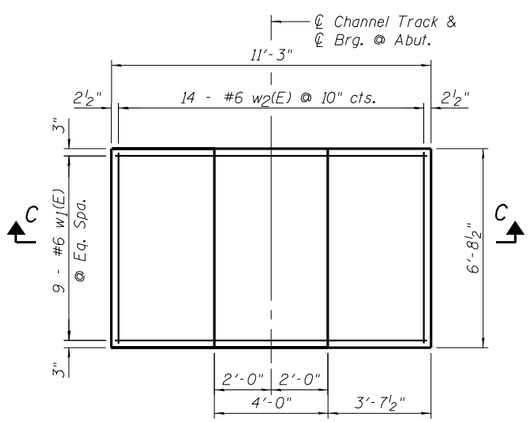

TEMP. CONCRETE LINK AT NORTH ABUTMENT PLAN

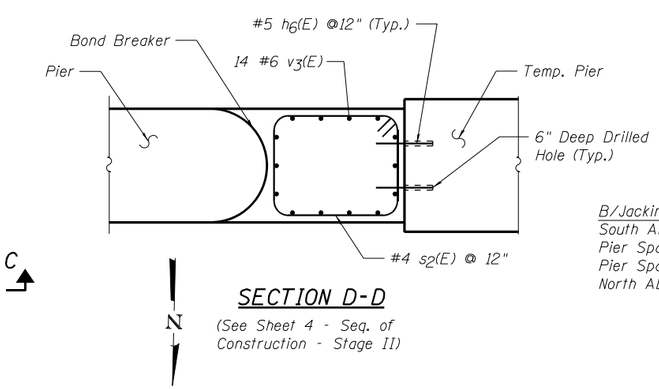

SECTION D-D

(See Sheet 4 - Seq. of Construction - Stage II)

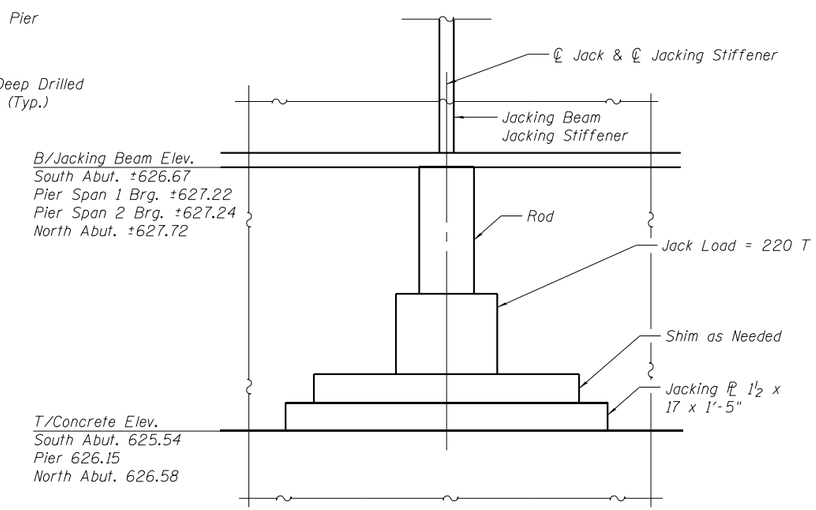

DETAIL OF JACK

BRIDGE ROLL-IN SEQUENCE

1. Lay C15 track at unobstructed locations.
2. Place jack and raise structure.
3. Remove bearings and replace with rollers
4. Install C15 track at bearing locations. (this may require removal of anchor bolts.)
5. Lower bridge/rollers onto track.
6. Remove Jacks and install track splices.
7. Roll bridge from temporary runaround location to proposed bridge location.
8. Clear jacking locations of C15 track.
9. Jack bridge, remove rollers, channels, etc.
10. Install permanent bearing components.
11. Lower bridge and make final connections.

Notes:
1. During the Roll-in process Span 1 and Span 2 shall be moved as a unit, such that both ends move at the same rate.
2. Coordinate anchor bolt install/removal with roll-in track installation.
3. Holes in top plate of Roller to match hole layout for bearings. Use oversized holes in top plate of Roller.
4. The duration of roll-in work shall not exceed 12 hours.

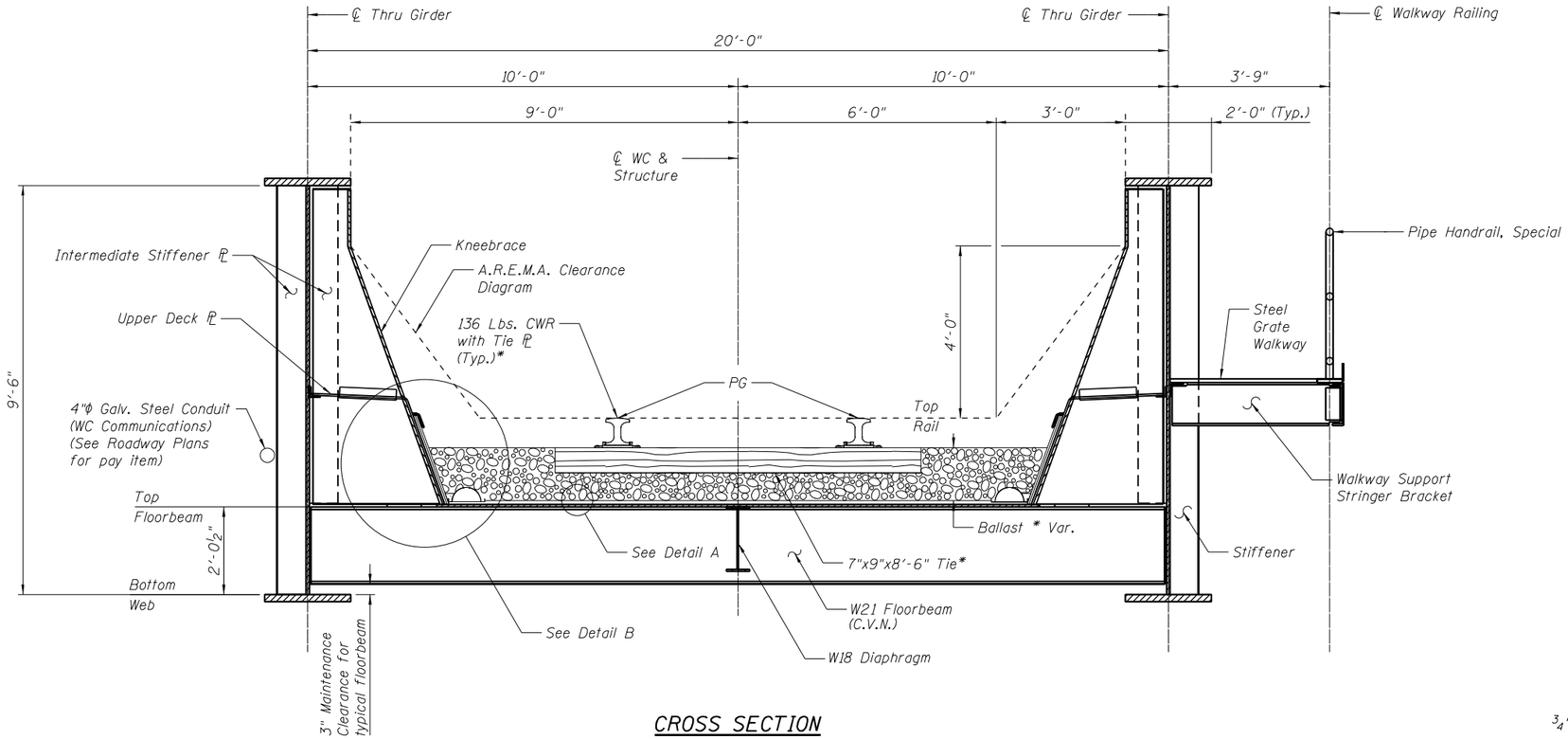

CROSS SECTION

(Looking North)

* Improvements by Others (WC)

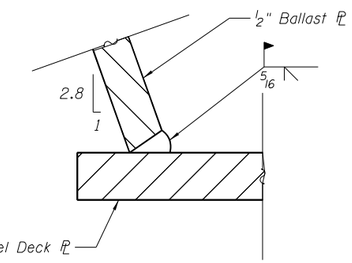

DETAIL "C"

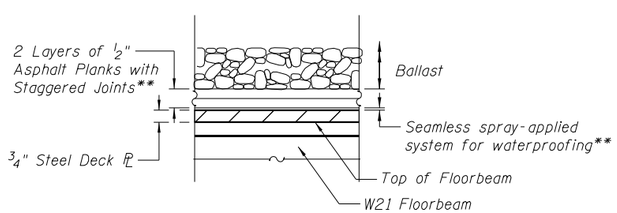

DETAIL "A"

** Included in the cost of Membrane Waterproofing (Special)

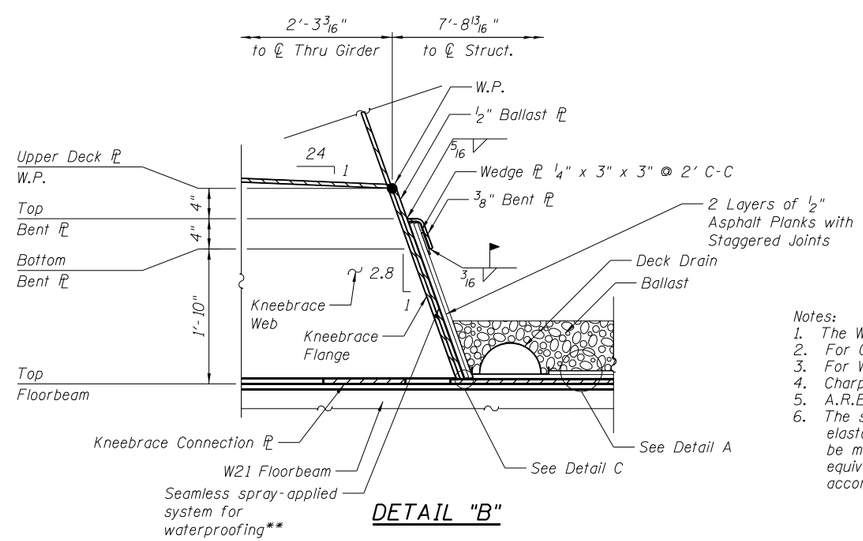

DETAIL "B"

Notes:

1. The Wisconsin Central, Ltd. shall install all Ballast.
2. For Girder Flange Thicknesses, see Sheets 21 & 22 of 49.
3. For Walkway Details, see Sheets 29-31 of 49.
4. Charpy V-Notch (C.V.N.), see General Notes.
5. A.R.E.M.A. - American Railway Engineering And Maintenance-of-Way Association.
6. The seamless spray-applied system for waterproofing shall be a two-component elastometer or methyl methacrylate resin membrane. The spray-applied system shall be manufactured by Bridge Preservation, GCP Applied Technologies, or an approved equivalent. The spray-applied system and the asphalt planks shall be installed according to the waterproofing manufacturer's recommendations.

ORIGINAL: DLZ Illinois, Inc.	UPDATED: LIN ENGINEERING, LTD. Consulting Engineers Springfield, Illinois	DESIGNED - ZJH	REVISED
		CHECKED - PRD JCZ	REVISED
		DRAWN - BAE	REVISED
	DATE - 03/25/22	CHECKED - ZJH JCZ	REVISED

STATE OF ILLINOIS
DEPARTMENT OF TRANSPORTATION

DECK CROSS SECTION
STRUCTURE NO. 032-9906

SHEET NO. 16 OF 49 SHEETS

F.A.I. RTE.	SECTION	COUNTY	TOTAL SHEETS	SHEET NO.
80	((32, 47-4)VB, HBR-3) BR, BRR	GRUNDY	143	73
		CONTRACT NO. 66295		
	ILLINOIS	FED. AID PROJECT		

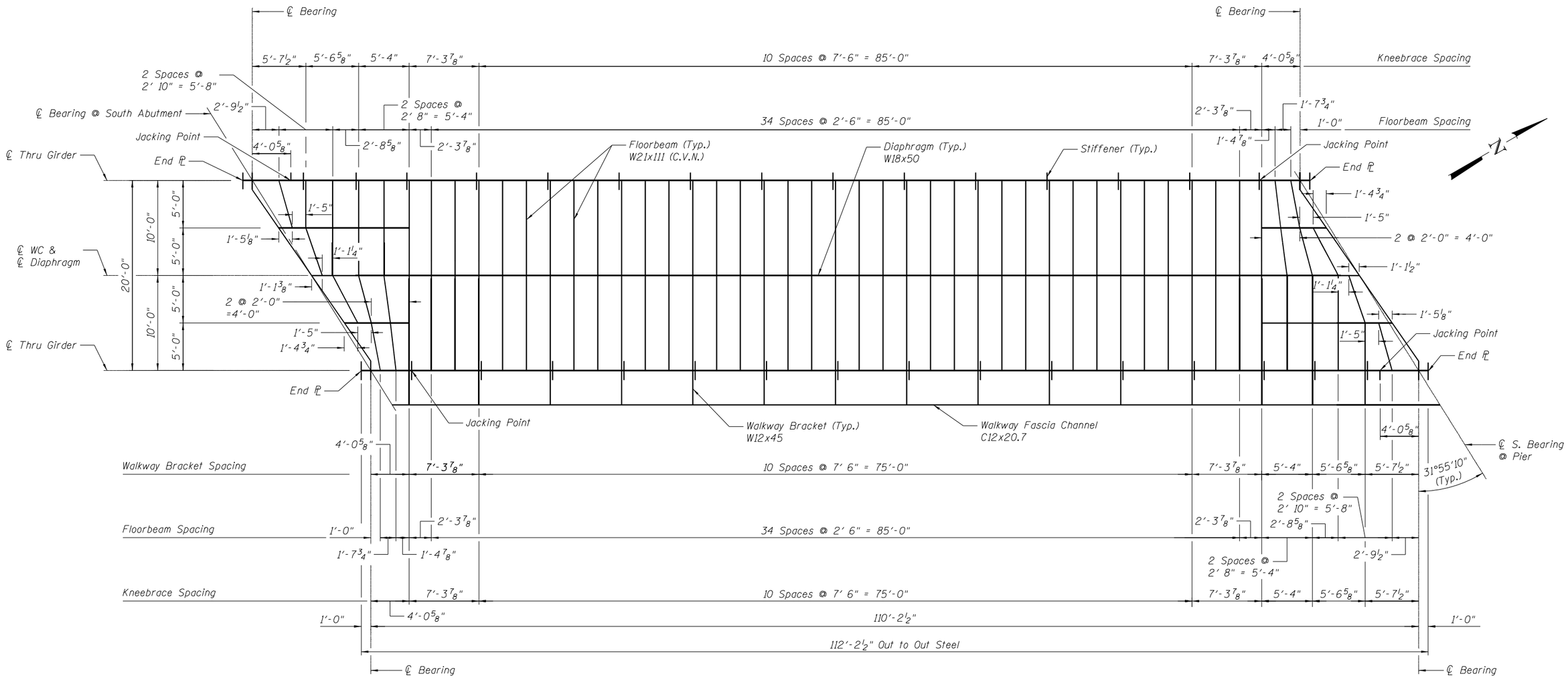

FRAMING PLAN - SPAN 1

SPAN 1 MOMENT TABLE				
Description		Thru Girder	Typical Floorbeam	End Floorbeam
Moment of Inertia, Gross	$(in)^4$	494,062	2,670	9,600
Moment of Inertia, Net	$(in)^4$	477,030	2,614	9,447
Section Modulus, Gross	$(in)^3$	8,321	249	718
Section Modulus, Net	$(in)^3$	7,954	243	708
Dead Load	(k/ft)	4.00	1.09	1.16
Moment Dead Load	(k-ft)	6,075	54	268
Moment Live Load	(k-ft)	8,848	216	740
Moment Impact	(k-ft)	2,268	76	352
Moment Total	(k-ft)	17,191	346	1,360
Flexural Stress Dead Load	(ksi)	9.17	2.67	4.54
Flexural Stress Live Load	(ksi)	13.35	10.67	12.54
Flexural Stress Impact	(ksi)	3.42	3.75	5.97
Flexural Stress Total	(ksi)	25.9	17.1	23.1
Allowable Flexural Stress	(ksi)	27.5	27.5	27.5
Ratio of Flexural Stress to Allowable		0.94	0.62	0.84
Max. Fatigue Stress Range (Cat. B)	(ksi)	14.55	9.72	11.62
Allowable Fatigue Stress Range	(ksi)	18.00	16.00	16.00
Ratio of Fatigue Stress to Allowable		0.81	0.61	0.73
Deflection Live Load + Impact	(in)	1.70	0.27	0.39
Ratio of Span Length to Deflection		778	889	725

SPAN 1 REACTION TABLE				
Description		Thru Girder	Typical Floorbeam	End Floorbeam
Reaction Dead Load	(k)	220	9.2	40.0
Reaction Live Load	(k)	343	28.8	84.5
Reaction Impact	(k)	88	11.5	41.5
Reaction Total	(k)	651	49.5	166.0
Shear Stress Dead Load	(ksi)	2.21	0.85	2.04
Shear Stress Live Load	(ksi)	3.44	2.65	4.31
Shear Stress Impact	(ksi)	0.88	1.06	2.11
Shear Stress Total	(ksi)	6.53	4.55	8.46
Allowable Shear Stress	(ksi)	17.5	17.5	17.5
Ratio of Shear Stress to Allowable		0.37	0.26	0.48

Notes:
1. For Floorbeam and Diaphragm sizes not typical see sheets 19 & 20 of 49.
2. Floor beams and diaphragm members shall conform to AASHTO M270, Gr. 50.
3. Charpy V-Notch (C.V.N.), see General Notes.

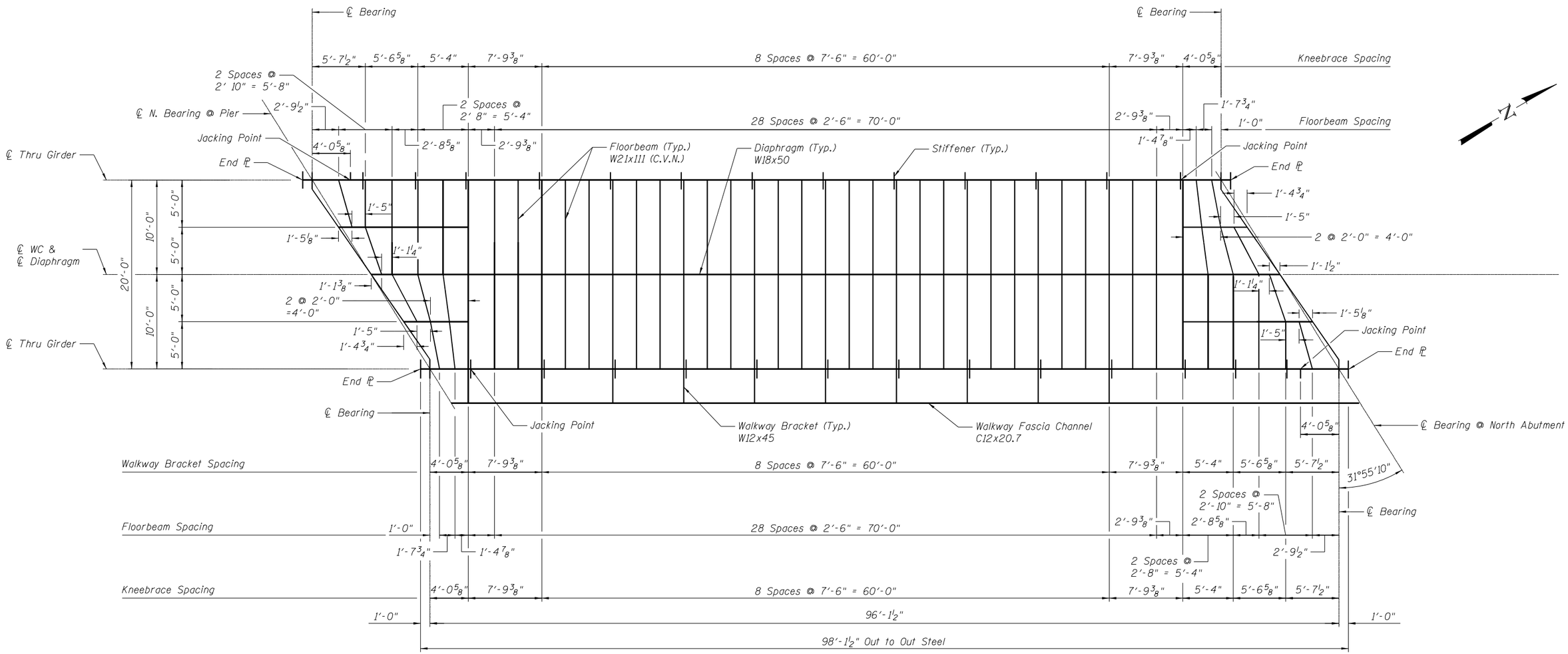

FRAMING PLAN - SPAN 2

SPAN 2 MOMENT TABLE				
Description		Thru Girder	Typical Floorbeam	End Floorbeam
Moment of Inertia, Gross	$(in)^4$	389,410	2,670	9,600
Moment of Inertia, Net	$(in)^4$	372,519	2,614	9,447
Section Modulus, Gross	$(in)^3$	6,628	249	718
Section Modulus, Net	$(in)^3$	6,274	243	708
Dead Load	(k/ft)	3.90	1.09	1.16
Moment Dead Load	(k-ft)	4,501	54	268
Moment Live Load	(k-ft)	6,863	216	740
Moment Impact	(k-ft)	1,857	76	352
Moment Total	(k-ft)	13,221	346	1,360
Flexural Stress Dead Load	(ksi)	8.61	2.67	4.54
Flexural Stress Live Load	(ksi)	13.13	10.67	12.54
Flexural Stress Impact	(ksi)	3.55	3.75	5.97
Flexural Stress Total	(ksi)	25.3	17.1	23.1
Allowable Flexural Stress	(ksi)	27.5	27.5	27.5
Ratio of Flexural Stress to Allowable		0.92	0.62	0.84
Max. Fatigue Stress Range (Cat. B)	(ksi)	14.37	9.72	11.62
Allowable Fatigue Stress Range	(ksi)	18.00	16.00	16.00
Ratio of Fatigue Stress to Allowable		0.80	0.61	0.73
Deflection Live Load + Impact	(in)	1.28	0.27	0.39
Ratio of Span Length to Deflection		901	889	725

SPAN 2 REACTION TABLE				
Description		Thru Girder	Typical Floorbeam	End Floorbeam
Reaction Dead Load	(k)	187	9.2	40.0
Reaction Live Load	(k)	309	28.8	84.5
Reaction Impact	(k)	84	11.5	41.5
Reaction Total	(k)	580	49.5	166.0
Shear Stress Dead Load	(ksi)	1.87	0.85	2.04
Shear Stress Live Load	(ksi)	3.10	2.65	4.31
Shear Stress Impact	(ksi)	0.84	1.06	2.11
Shear Stress Total	(ksi)	5.81	4.55	8.46
Allowable Shear Stress	(ksi)	17.5	17.5	17.5
Ratio of Shear Stress to Allowable		0.33	0.26	0.48

Notes:
1. For Floorbeam and Diaphragm sizes not typical see sheets 19 & 20 of 49.
2. Floor beams and diaphragm members shall conform to AASHTO M270, Gr. 50.
3. Charpy V-Notch (C.V.N.), see General Notes.

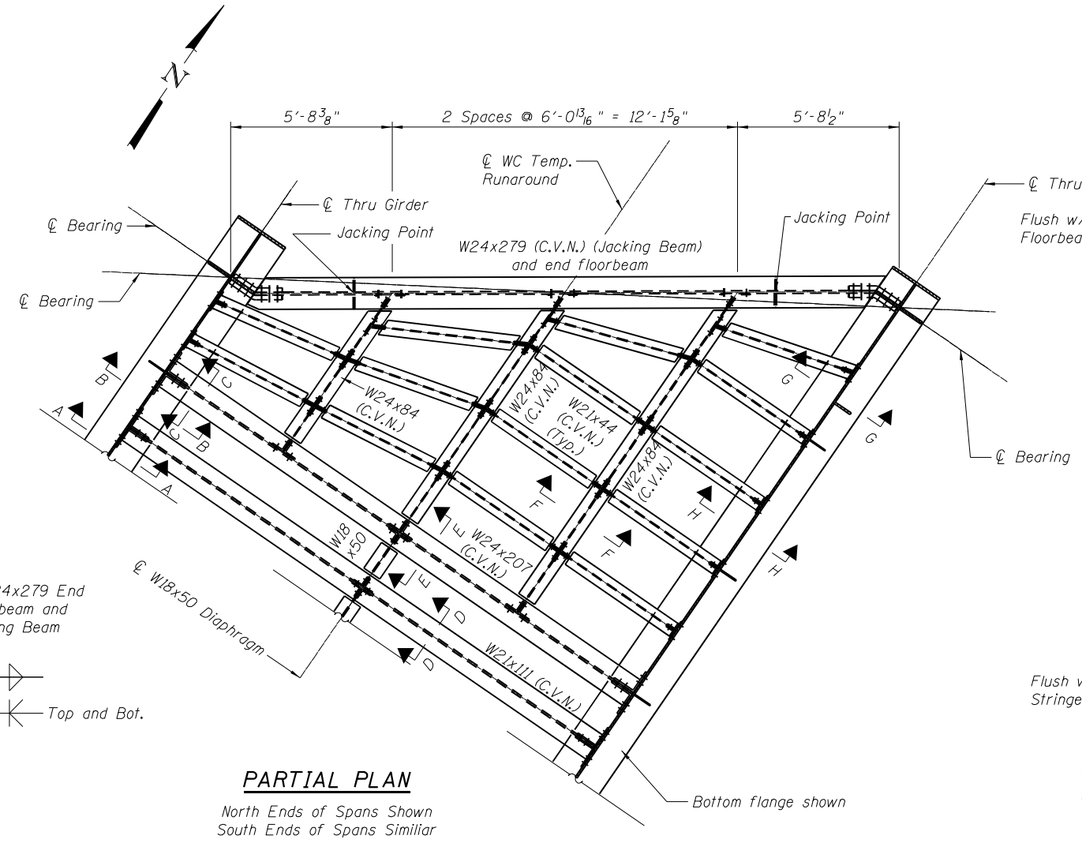

PARTIAL PLAN

North Ends of Spans Shown
South Ends of Spans Similiar

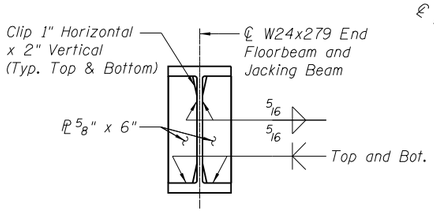

JACKING BEAM STIFFENER

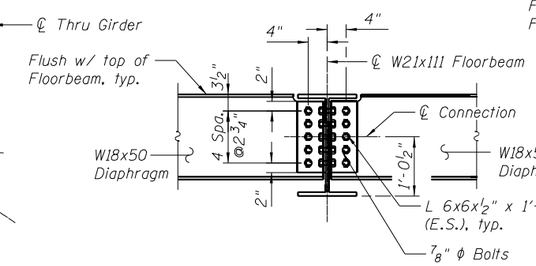

SECTION D-D

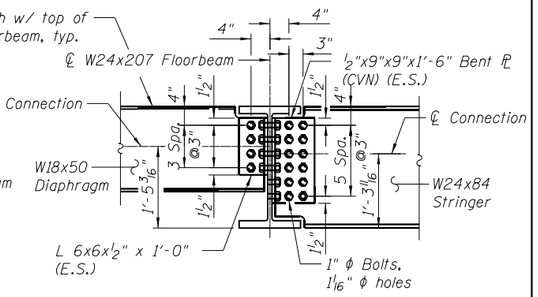

SECTION E-E

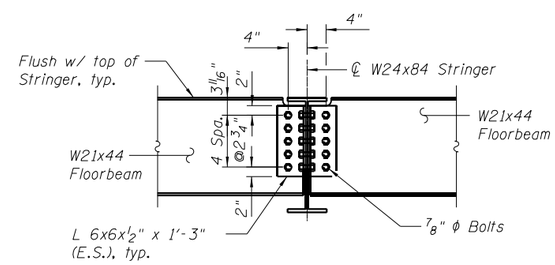

SECTION F-F

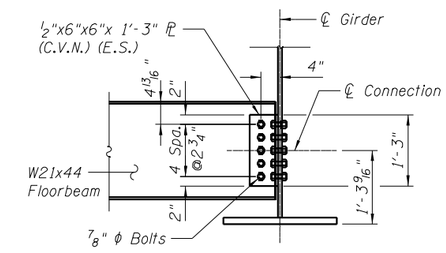

SECTION G-G

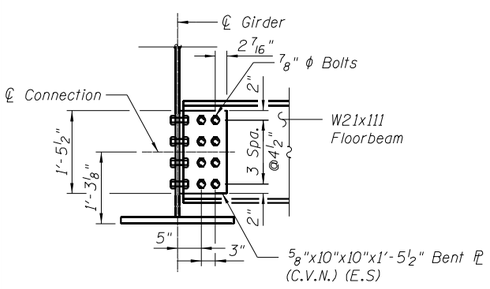

SECTION A-A

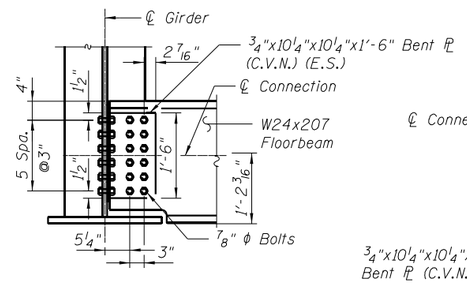

SECTION B-B

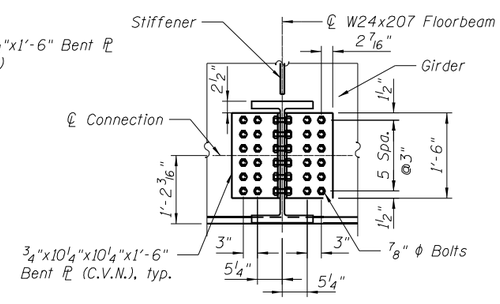

SECTION C-C

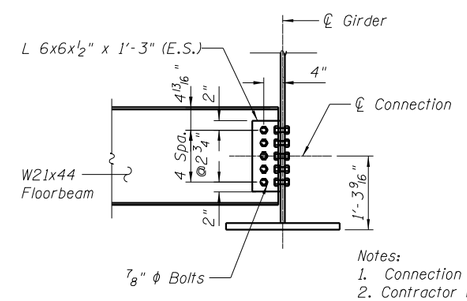

SECTION H-H

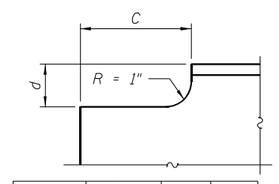

Section	Coped Beam	"c"	"d"
B-B	W24x207	1'-0"	2 3/4"
D-D	W18x50	6 3/8"	1 1/2"
E-E	W18x50	6 1/4"	2 1/2"
E-E	W24x84	6 1/4"	2 1/2"
F-F	W21x44	4 3/8"	1 11/16"

COPING DETAILS

Notes:
1. Connection plates and angles shall conform to AASHTO M270, Gr. 50.
2. Contractor may elect to fabricate angles from steel plates (C.V.N.) if stock angles are not available in specified materials.
3. Charpy V-Notch (C.V.N.), see General Notes.
4. "E.S." indicates "each side".

ORIGINAL: DLZ Illinois, Inc. UPDATED: LIN ENGINEERING LTD. Consulting Engineers Springfield, Illinois

	DESIGNED - ZJH	REVISED
	CHECKED - PRD JCZ	REVISED
	DRAWN - BAE	REVISED
DATE - 03/25/22	CHECKED - ZJH JCZ	REVISED

STATE OF ILLINOIS
DEPARTMENT OF TRANSPORTATION

END FRAMING PLAN & STEEL DETAILS
STRUCTURE NO. 032-9906

SHEET NO. 19 OF 49 SHEETS

F.A.I. RTE.	SECTION	COUNTY	TOTAL SHEETS	SHEET NO.
80	(32, 47-4)VB, HBR-3) BR, BRR	GRUNDY	143	76
		CONTRACT NO. 66295		
	ILLINOIS	FED. AID PROJECT		

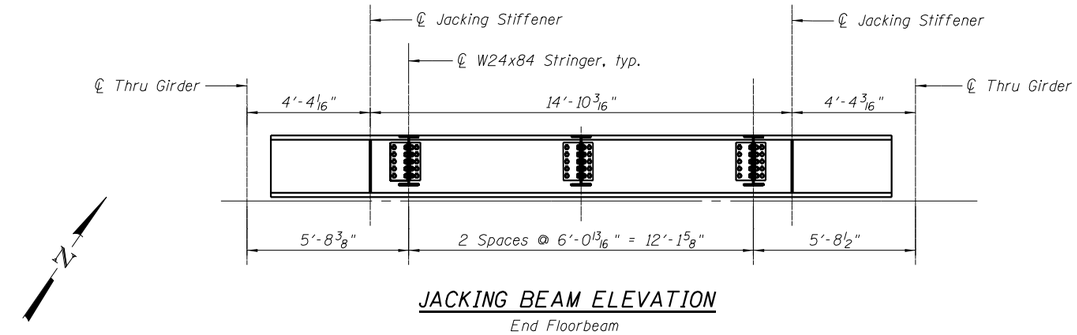

JACKING BEAM ELEVATION

End Floorbeam

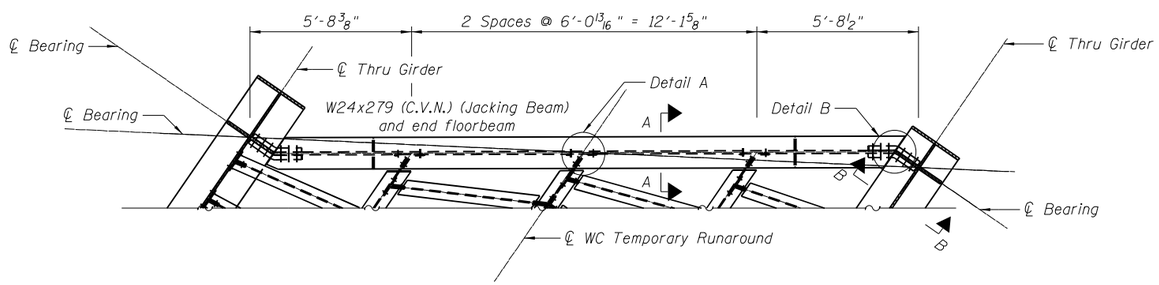

PARTIAL PLAN

North Ends of Spans Shown
South Ends of Spans Similiar

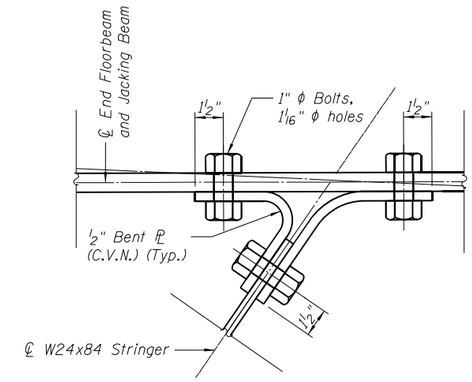

DETAIL "A"

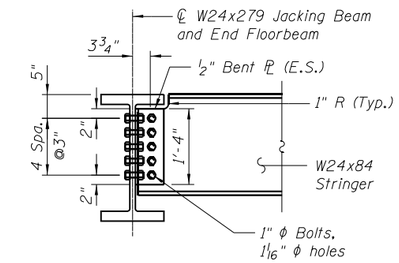

SECTION A-A

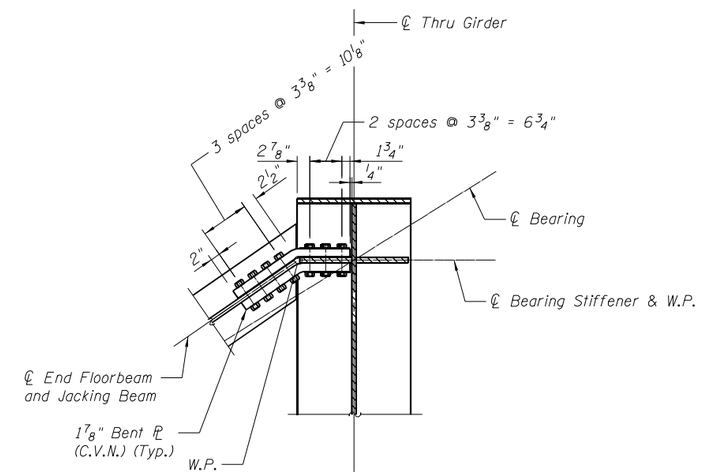

DETAIL "B" PLAN

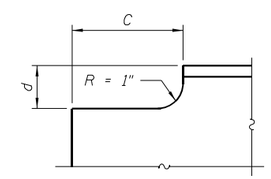

Section	Coped Beam	"c"	"d"
A - A	W24x84	6 3/8"	3"

COPING DETAIL

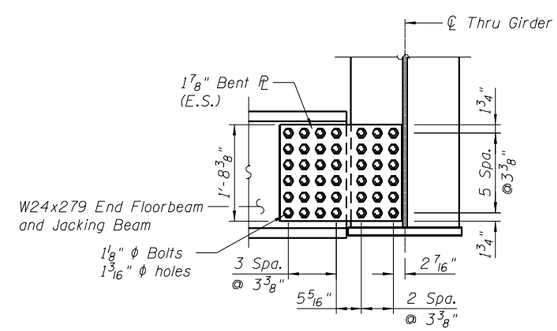

SECTION B-B

Notes:
1. Connection plates and angles shall conform to AASHTO M270, Gr. 50.
2. Contractor may elect to fabricate angles from steel plates if stock angles are not available in specified materials.
3. Charpy V-Notch (C.V.N.), see General Notes.
4. "E.S." indicates "each side".

ORIGINAL:	UPDATED:			
DLZ Illinois, Inc.	LIN ENGINEERING, LTD. Consulting Engineers Springfield, Illinois	DESIGNED - ZJH	REVISED	
		CHECKED - PRD JCZ	REVISED	
		DRAWN - BAE	REVISED	
	DATE - 03/25/22	CHECKED - ZJH JCZ	REVISED	

STATE OF ILLINOIS
DEPARTMENT OF TRANSPORTATION

STEEL DETAILS
STRUCTURE NO. 032-9906

SHEET NO. 20 OF 49 SHEETS

F.A.I. RTE.	SECTION	COUNTY	TOTAL SHEETS	SHEET NO.
80	((32, 47-4)VB, HBR-3) BR, BRR	GRUNDY	143	77
		CONTRACT NO. 66295		
	ILLINOIS	FED. AID PROJECT		

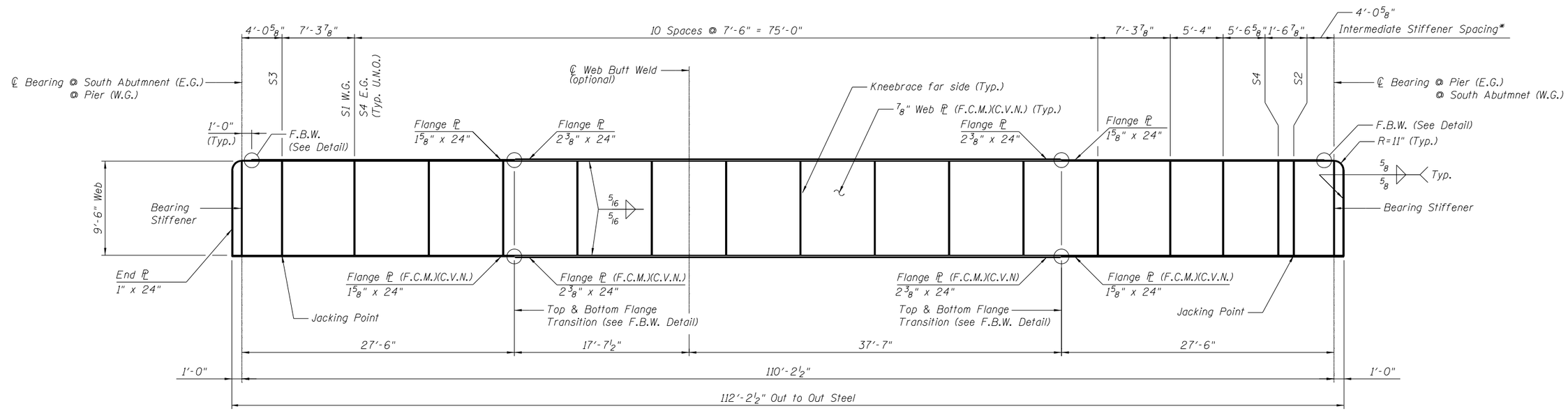

SPAN 1 THRU GIRDER ELEVATION

* Stiffener Spacing Measured to ℄ Kneebrace
East Girder (E.G.) Shown
West Girder (W.G.) Opposite of Shown

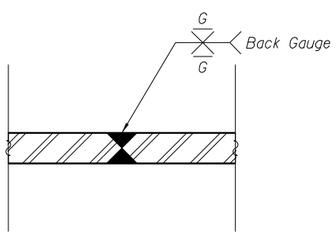

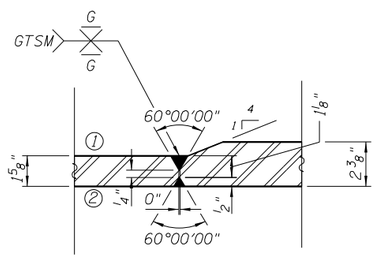

Side ② Gouged out to sound metal after side ① is welded, and then weld.

Welding shall be performed in flat position in accordance with CSA Standard W59. Run-off plates shall be used to ensure sound welds and full throat thickness, and shall be of same material and geometry as flange at joint. After completion and cooling of weld, remove run-off plates and grind weld flush on all sides (in direction of stresses).

FLANGE BUTT WELD (F.B.W.)

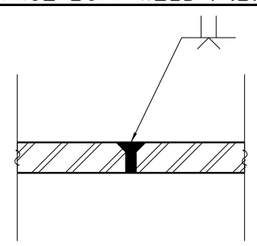

WEB BUTT WELD

(OPTIONAL)

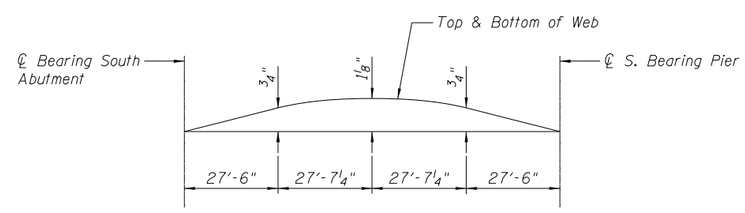

CAMBER DIAGRAM

Notes:
1. Girder flanges and webs shall conform to AASHTO M270, Gr. 50, Unless otherwise noted.
2. Fracture Critical Member (F.C.M.)
3. For Stiffener (S1 thru S4) and Bearing Stiffener Details, see "Misc. Structural Steel Details" drawing, Sheet 23 of 49.
4. For Walkway Details, see "Walkway" drawings, Sheets 29-31 of 49.
5. Charpy V-Notch (C.V.N.), see General Notes.
6. For Kneebrace Details, see sheet 24 of 49.

ORIGINAL: DLZ DLZ Illinois, Inc. UPDATED: LIN ENGINEERING, LTD. Consulting Engineers Springfield, Illinois		DESIGNED - ZJH	REVISED
		CHECKED - PRD JCZ	REVISED
		DRAWN - BAE	REVISED
	DATE - 03/25/22	CHECKED - ZJH JCZ	REVISED

STATE OF ILLINOIS
DEPARTMENT OF TRANSPORTATION

GIRDER ELEVATION (SPAN 1)
STRUCTURE NO. 032-9906

SHEET NO. 21 OF 49 SHEETS

F.A.I. RTE.	SECTION	COUNTY	TOTAL SHEETS	SHEET NO.
80	((32, 47-4)VD, HBR-3) BR, BRR	GRUNDY	143	78
		CONTRACT NO. 66295		
	ILLINOIS	FED. AID PROJECT		

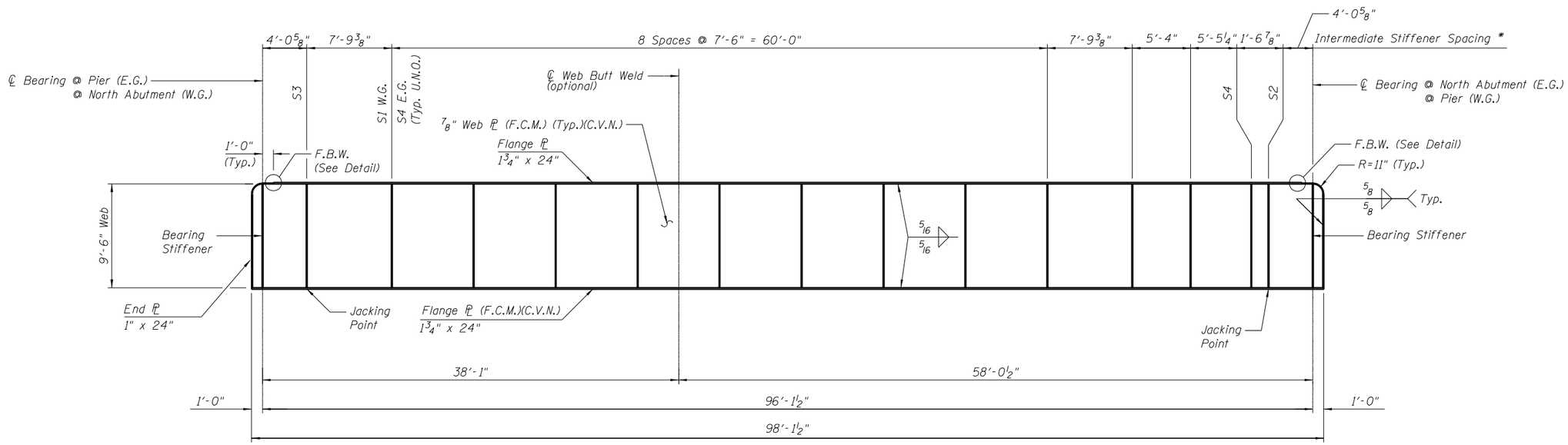

SPAN 2 THRU GIRDER ELEVATION

* Stiffener Spacing Measured to ℄ Kneebrace
East Girder (E.G.) Shown
West Girder (W.G.) Opposite of Shown

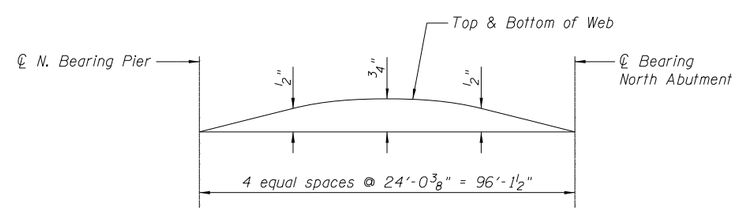

CAMBER DIAGRAM

Notes:
1. Girder flanges and webs shall conform to AASHTO M270, Gr. 50, Unless otherwise noted.
2. Fracture Critical Member (F.C.M.)
3. For Stiffener (S1 thru S4) and Bearing Stiffener Details, see "Misc. Structural Steel Details" drawing, Sheet 23 of 49.
4. For Walkway Details, see "Walkway" drawings, Sheets 29-31 of 49.
5. Charpy V-Notch (C.V.N.), see General Notes.
6. For Kneebrace Details, see sheet 24 of 49.

ORIGINAL: DLZ DLZ Illinois, Inc. UPDATED: LIN ENGINEERING, LTD. Consulting Engineers Springfield, Illinois		DESIGNED - ZJH	REVISED
		CHECKED - PRD JCZ	REVISED
		DRAWN - BAE	REVISED
	DATE - 03/25/22	CHECKED - PRD JCZ	REVISED

STATE OF ILLINOIS
DEPARTMENT OF TRANSPORTATION

GIRDER ELEVATION (SPAN 2)
STRUCTURE NO. 032-9906

SHEET NO. 22 OF 49 SHEETS

F.A.I. RTE.	SECTION	COUNTY	TOTAL SHEETS	SHEET NO.
80	((32, 47-4)VB, HBR-3) BR, BRR	GRUNDY	143	79
		CONTRACT NO. 66295		
	ILLINOIS	FED. AID PROJECT		

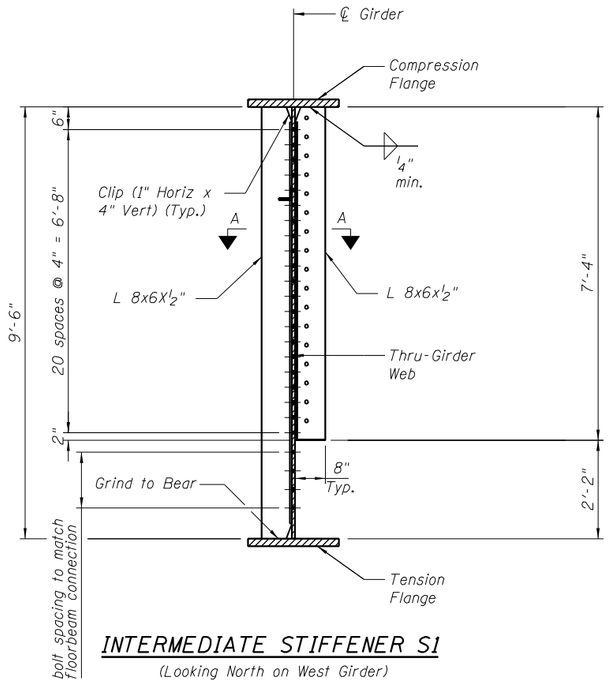

INTERMEDIATE STIFFENER S1

(Looking North on West Girder)

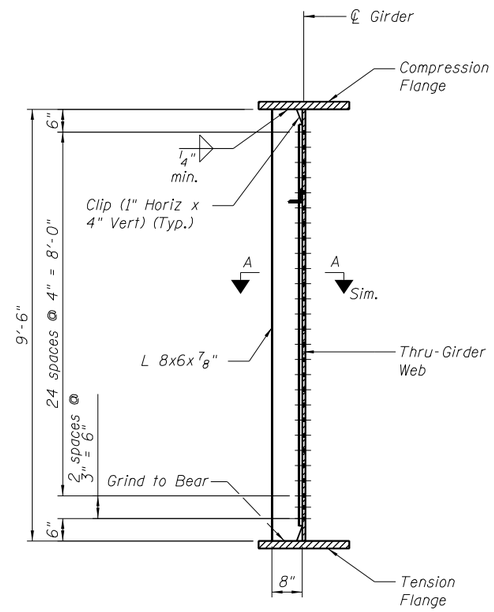

JACKING STIFFENER S2

(Looking North on West Girder)
(Looking South on East Girder)

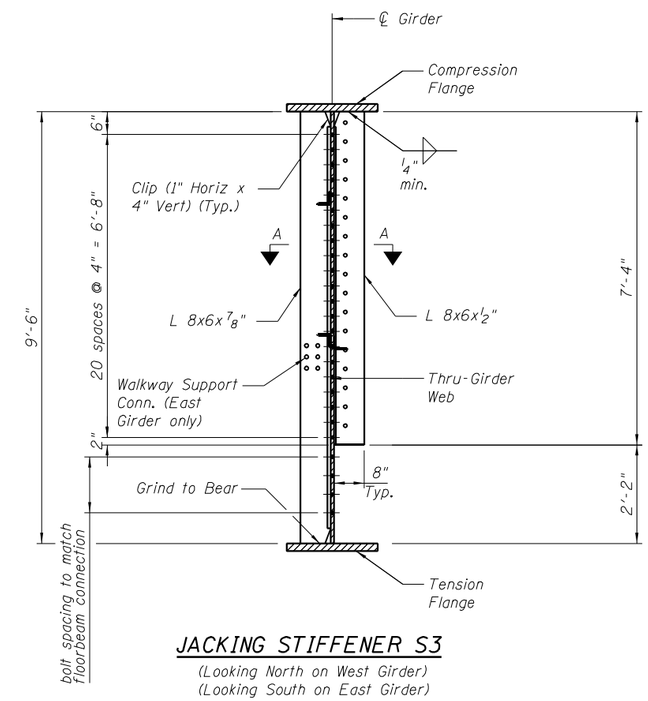

JACKING STIFFENER S3

(Looking North on West Girder)
(Looking South on East Girder)

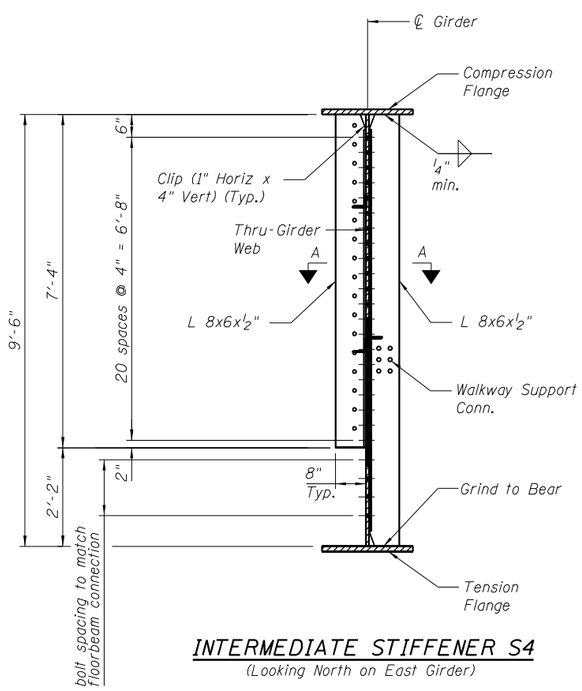

INTERMEDIATE STIFFENER S4

(Looking North on East Girder)

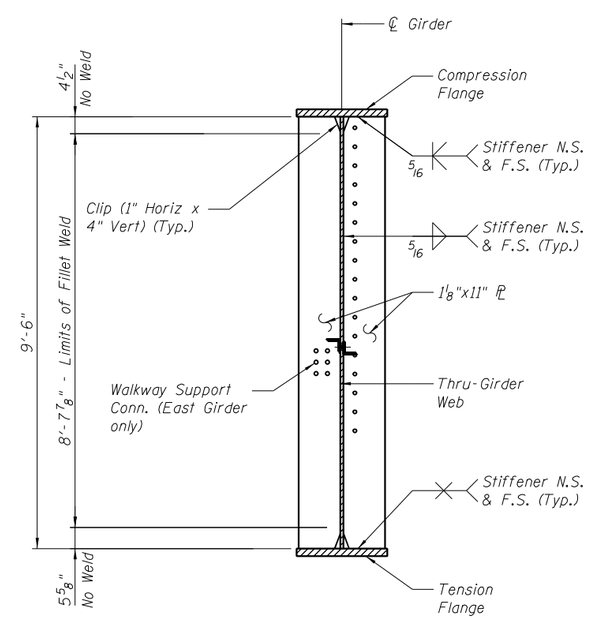

BEARING STIFFENER

(Looking North on West Girder)
(Looking South on East Girder)

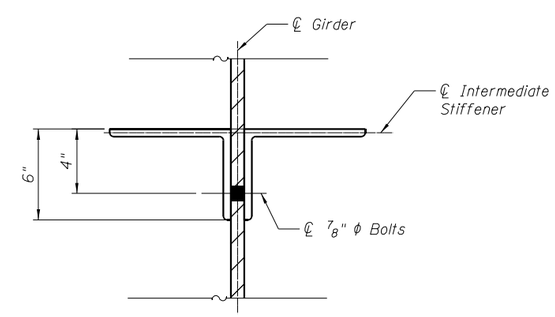

SECTION A-A

Notes:
All structural steel plates and angles shall conform to AASHTO M270, Gr. 50.
See Sheet 31 of 49 for Walkway Support Connection.
Work this sheet with sheet 24 of 49.

ORIGINAL: DLZ Illinois, Inc. UPDATED: LIN ENGINEERING LTD. Consulting Engineers Springfield, Illinois		DESIGNED - ZJH	REVISED
		CHECKED - PRD JCZ	REVISED
		DRAWN - BAE	REVISED
	DATE - 03/25/22	CHECKED - ZJH JCZ	REVISED

STATE OF ILLINOIS
DEPARTMENT OF TRANSPORTATION

MISC. STRUCTURAL STEEL DETAILS
STRUCTURE NO. 032-9906

SHEET NO. 23 OF 49 SHEETS

F.A.I. RTE.	SECTION	COUNTY	TOTAL SHEETS	SHEET NO.
80	((32, 47-4)VB, HBR-3) BR, BRR	GRUNDY	143	80
		CONTRACT NO. 66295		
	ILLINOIS	FED. AID PROJECT		

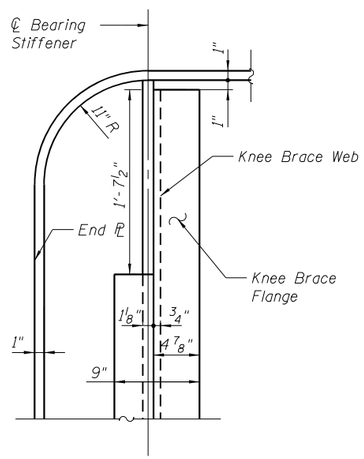

SECTION A-A

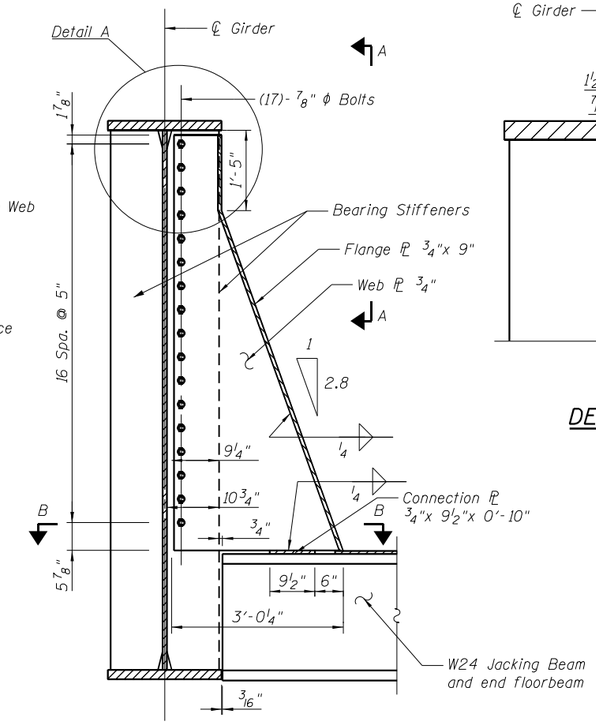

KNEEBRACE AT BEARING STIFFENER

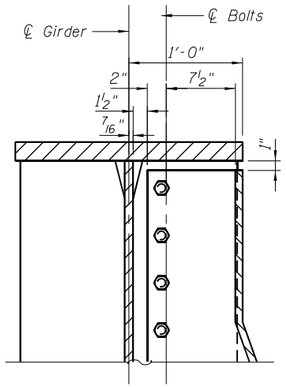

DETAIL A

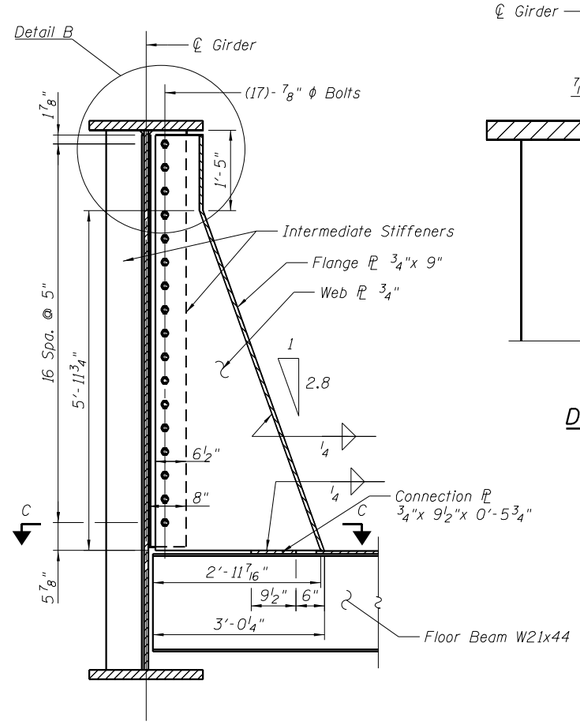

KNEEBRACE AT W21x44 FLOOR BEAM

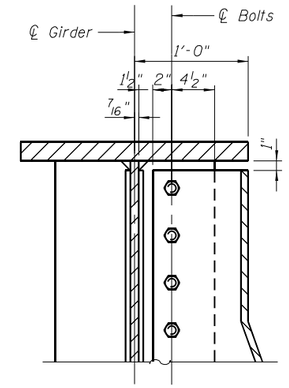

DETAIL B

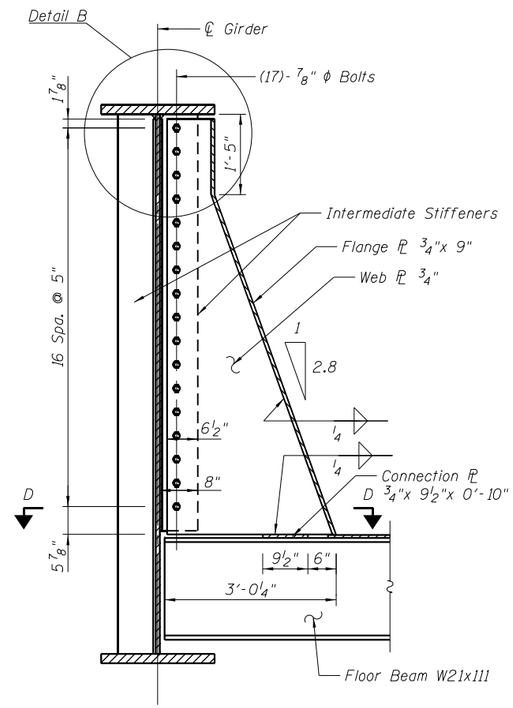

KNEEBRACE AT TYPICAL W21x111 FLOOR BEAM

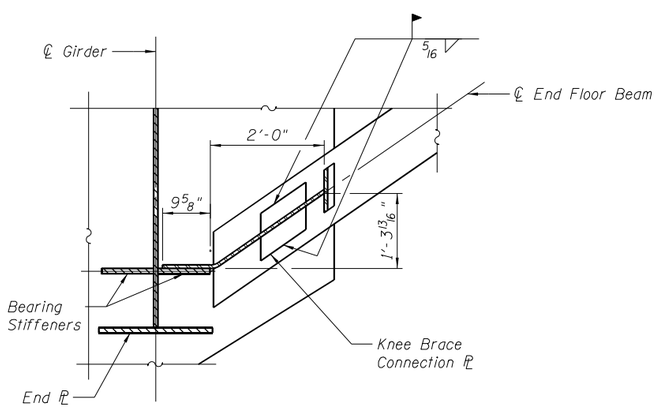

SECTION B-B

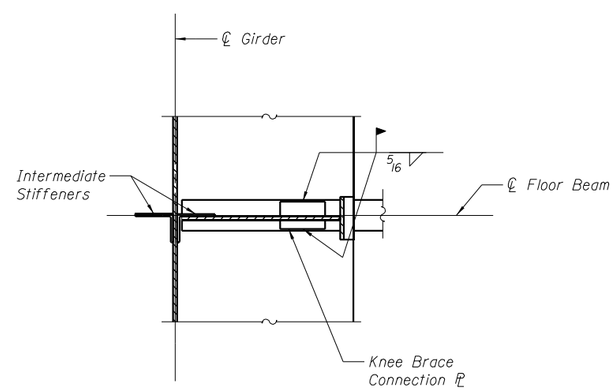

SECTION C-C

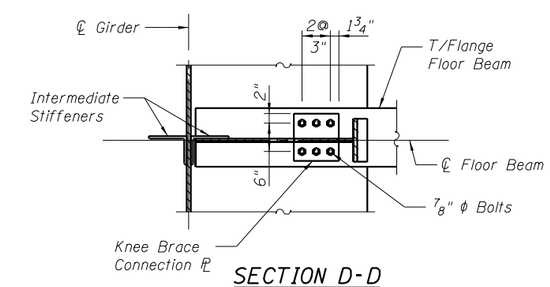

SECTION D-D

Notes:
All structural steel plates shall conform to AASHTO M270, Gr. 50.
Work this sheet with sheet 23 of 49.

ORIGINAL: DLZ Illinois, Inc. UPDATED: LIN ENGINEERING, LTD. Consulting Engineers Springfield, Illinois		DESIGNED - ZJH	REVISED
		CHECKED - PRD JCZ	REVISED
		DRAWN - BAE	REVISED
	DATE - 03/25/22	CHECKED - ZJH JCZ	REVISED

STATE OF ILLINOIS
DEPARTMENT OF TRANSPORTATION

MISC. STRUCTURAL STEEL DETAILS
STRUCTURE NO. 032-9906

SHEET NO. 24 OF 49 SHEETS

F.A.I. RTE.	SECTION	COUNTY	TOTAL SHEETS	SHEET NO.
80	((32, 47-4)VB, HBR-3) BR, BRR	GRUNDY	143	81
		CONTRACT NO. 66295		
	ILLINOIS	FED. AID PROJECT		

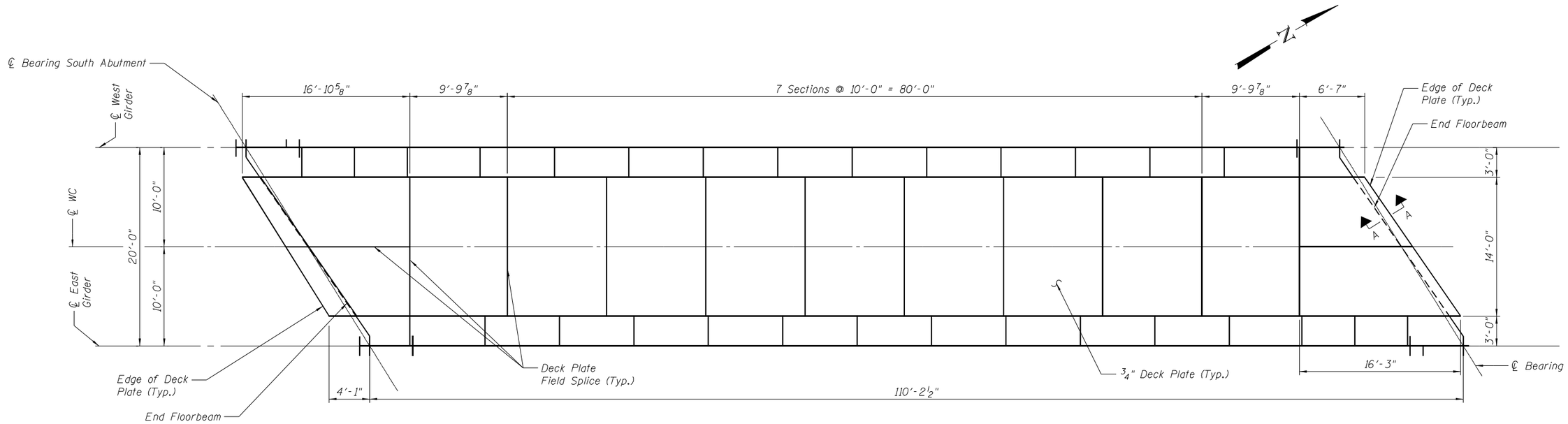

PLAN SPAN 1

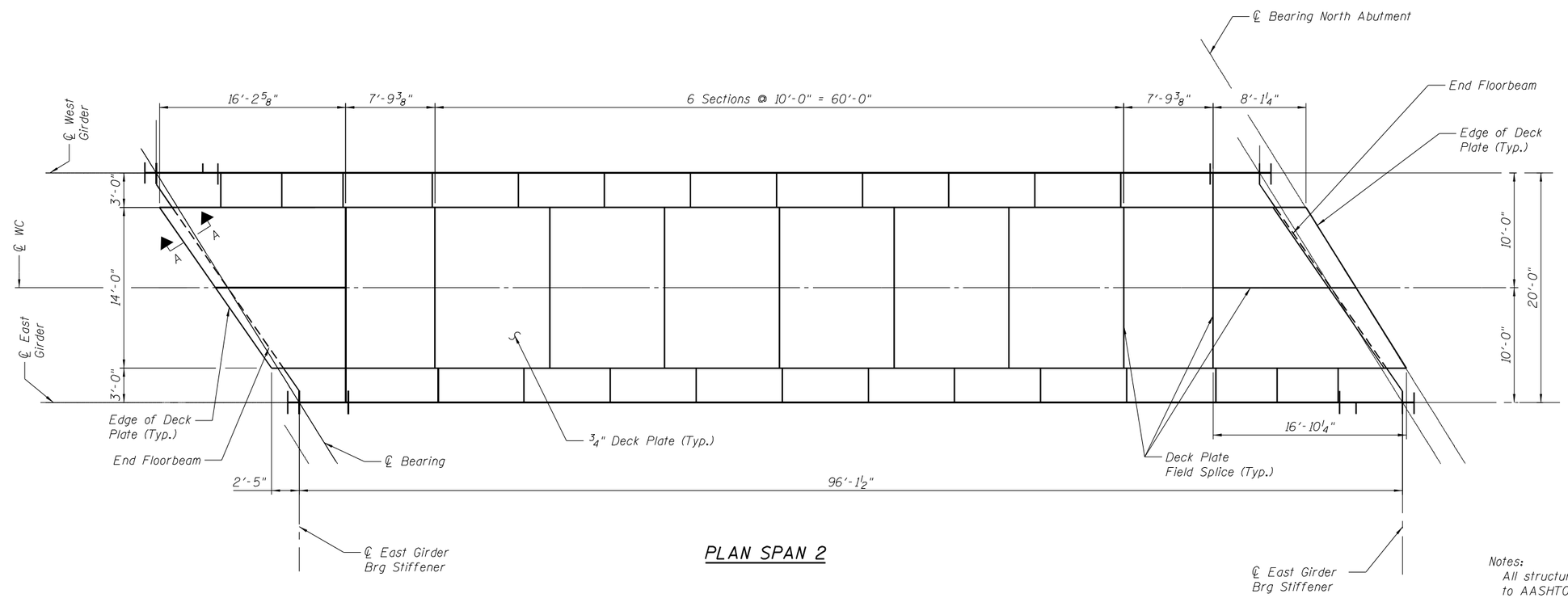

PLAN SPAN 2

Notes:
All structural steel deck plate shall conform to AASHTO M270, Gr. 50.
See Sheet 26 of 49 for Section A-A.

ORIGINAL: DLZ Illinois, Inc.	UPDATED: LIN ENGINEERING LTD. Consulting Engineers Springfield, Illinois		DESIGNED - ZJH	REVISED	STATE OF ILLINOIS DEPARTMENT OF TRANSPORTATION	DECK PLATE STRUCTURE NO. 032-9906	F.A.I. RTE.	SECTION	COUNTY	TOTAL SHEETS	SHEET NO.
			CHECKED - PRD JCZ	REVISED			80	((32, 47-4)VB, HBR-3) BR, BRR	GRUNDY	143	82
			DRAWN - BAE	REVISED					CONTRACT NO. 66295		
		DATE - 03/25/22	CHECKED - ZJH JCZ	REVISED		SHEET NO. 25 OF 49 SHEETS		ILLINOIS	FED. AID PROJECT		

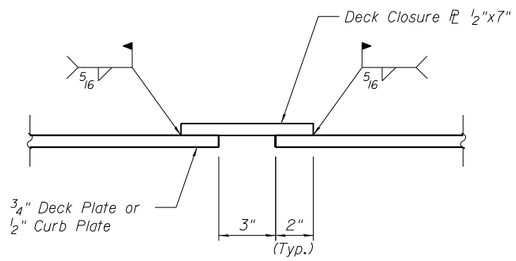

SECTION A-A

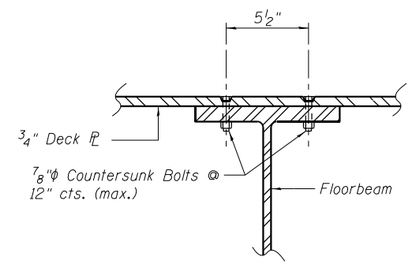

SECTION THRU FLOOR BEAM
AT DECK PLATE CONNECTION

The deck plate shall be connected to at least every other floor beam, resulting in an average longitudinal spacing of 5'-0" for the deck plate connections.

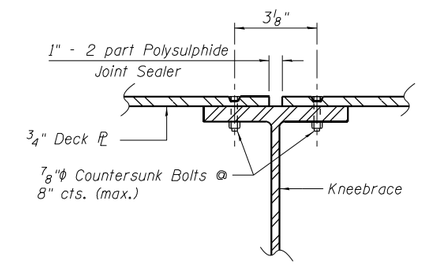

SECTION THRU KNEEBRACE AT
BALLAST PLATE FIELD SPLICE

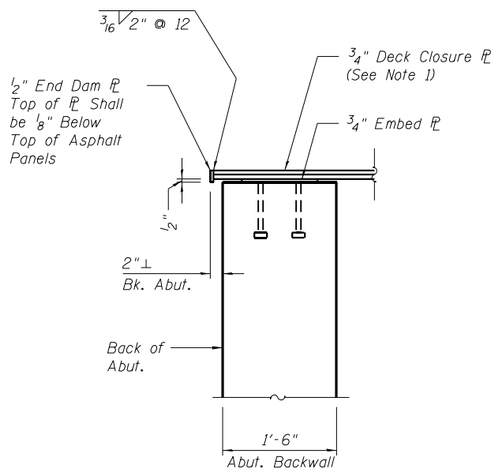

SECTION M-M

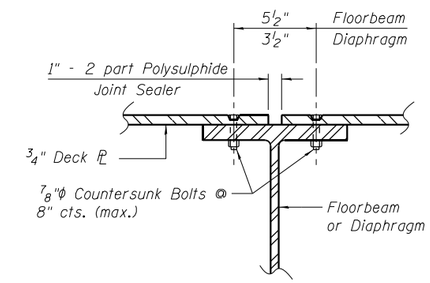

SECTION THRU FLOOR BEAM OR DIAPHRAGM
AT DECK PLATE FIELD SPLICE

Notes:
Contractor to Use Extreme Care in welding Deck Closure PL.
Contractor shall submit method of welding to Engineer for Review.
All structural steel plates and angles shall conform to AASHTO M270, Gr. 50.
See Sheet 25 of 49 for location of Section A-A.
See Sheets 38 of 49 and 42 of 49 for location of Section M-M.

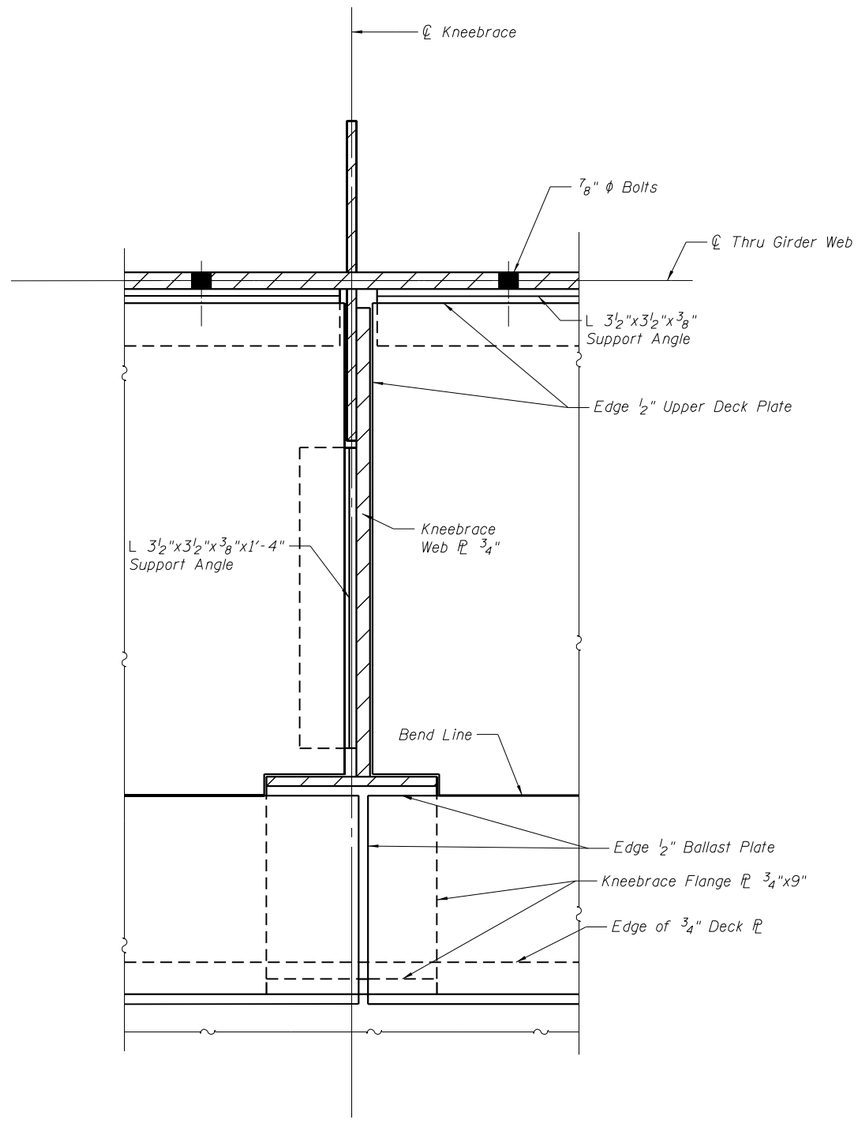

SECTION A-A

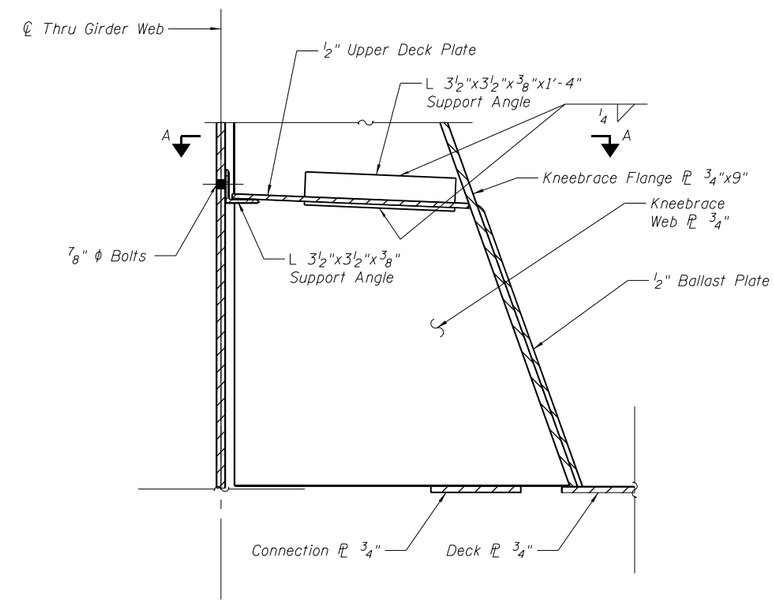

SECTION THRU UPPER DECK PLATE AT KNEEBRACE

(See Detail "B" on Sheet 16 of 49 for location)

Notes:
Support angles shall conform to AASHTO M270, Gr. 50.
See Sheets 29-30 of 49 for details of support angle connection to the Thru Girder Web.

ORIGINAL: DLZ DLZ Illinois, Inc. UPDATED: LIN ENGINEERING LTD. Consulting Engineers Springfield, Illinois		DESIGNED - ZJH	REVISED	STATE OF ILLINOIS DEPARTMENT OF TRANSPORTATION	UPPER DECK PLATE STRUCTURE NO. 032-9906	F.A.I. RTE.	SECTION	COUNTY	TOTAL SHEETS	SHEET NO.
		CHECKED - PRD JCZ	REVISED			80	((32, 47-4)VB, HBR-3) BR, BRR	GRUNDY	143	84
		DRAWN - BAE	REVISED					CONTRACT NO. 66295		
	DATE - 03/25/22	CHECKED - ZJH JCZ	REVISED		SHEET NO. 27 OF 49 SHEETS		ILLINOIS	FED. AID PROJECT		

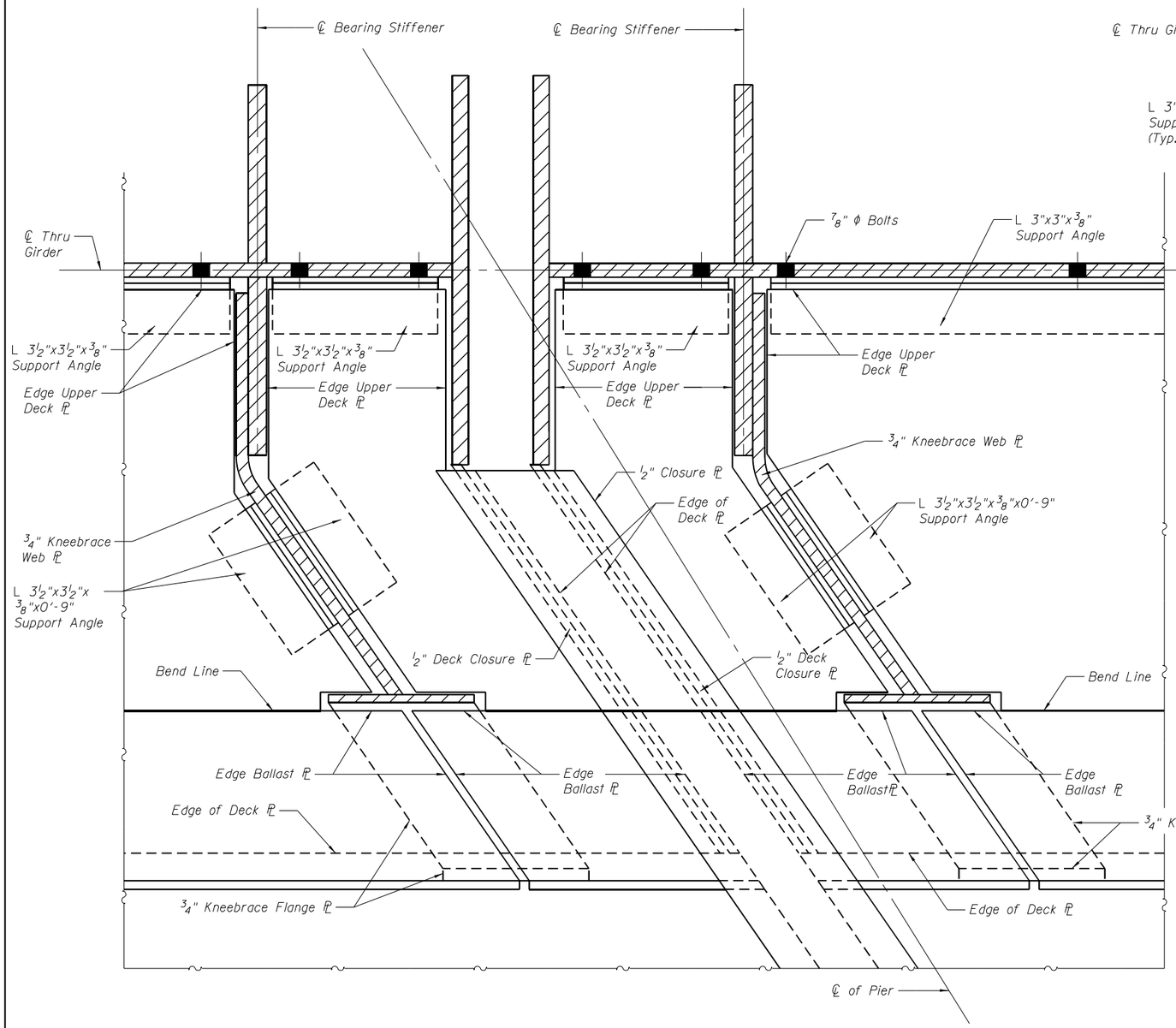

UPPER DECK PLATE AT PIER PLAN

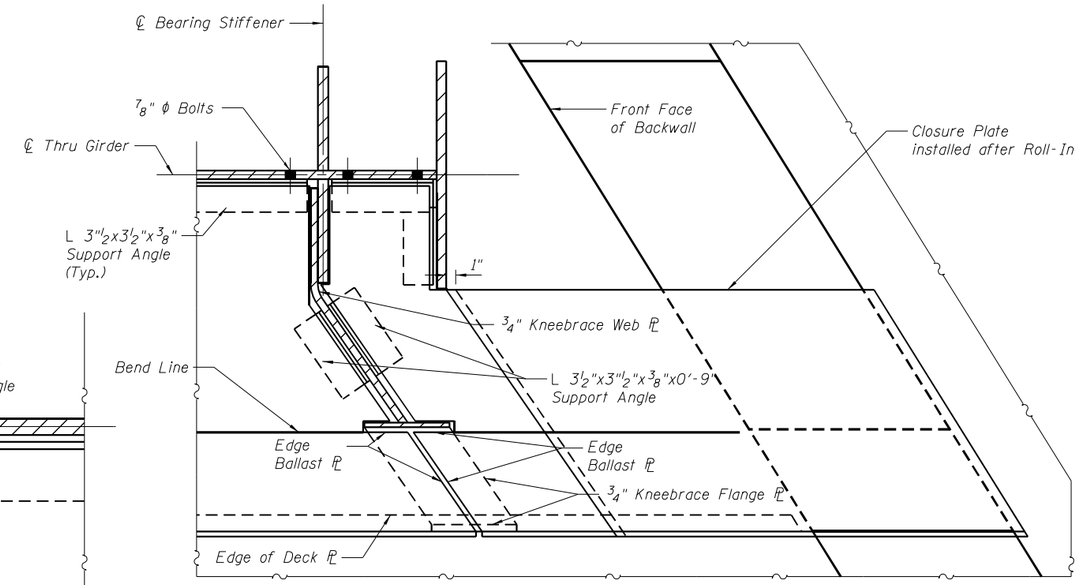

UPPER DECK PLATE AT WEST GIRDER AND NORTH ABUTMENT PLAN

East Girder at South Abutment Similiar

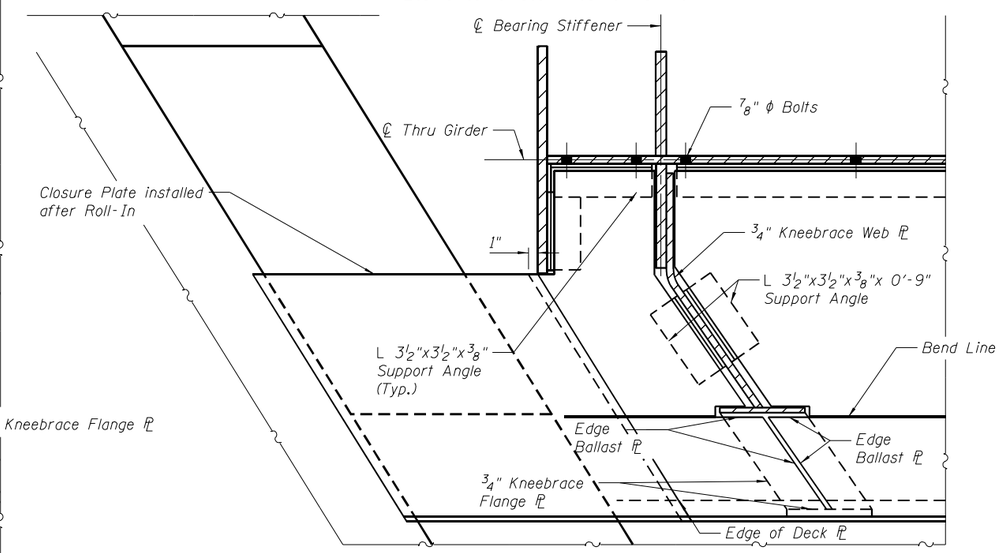

UPPER DECK PLATE AT WEST GIRDER AND SOUTH ABUTMENT PLAN

East Girder at North Abutment Similiar

Notes:
Support angles shall conform to AASHTO M270, Gr. 50.
See sheet 27 of 49 for details of support angle connection to stiffener or kneebrace web plates.
See Sheets 29-30 of 49 for details of support angle connection to the Thru Girder Web.

ORIGINAL:	UPDATED:									
DLZ DLZ Illinois, Inc.	LIN ENGINEERING LTD. Consulting Engineers Springfield Illinois		DESIGNED - ZJH	REVISED	STATE OF ILLINOIS DEPARTMENT OF TRANSPORTATION	UPPER DECK PLATE STRUCTURE NO. 032-9906	F.A.I. RTE.	SECTION	COUNTY	TOTAL SHEETS / SHEET NO.
			CHECKED - PRD JCZ	REVISED			80	(32, 47-4)VB, HBR-3) BR, BRR	GRUNDY	143 / 85
			DRAWN - BAE	REVISED					CONTRACT NO. 66295	
		DATE - 03/25/22	CHECKED - ZJH JCZ	REVISED		SHEET NO. 28 OF 49 SHEETS		ILLINOIS	FED. AID PROJECT	

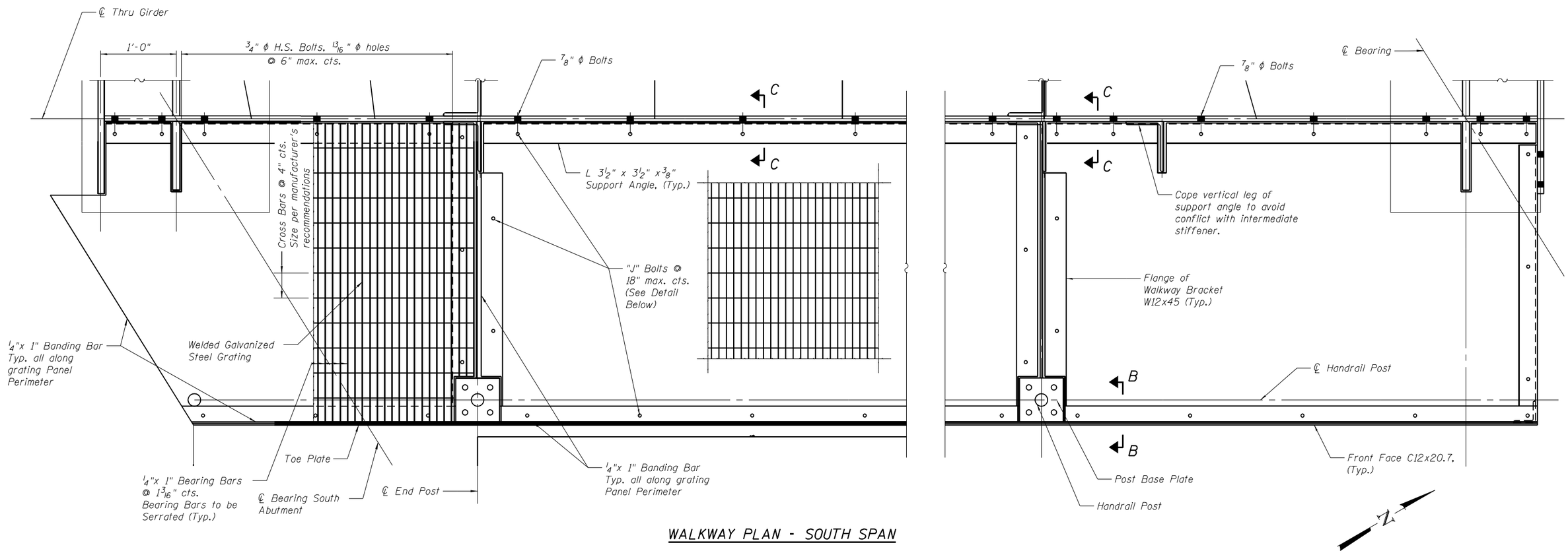

WALKWAY PLAN - SOUTH SPAN

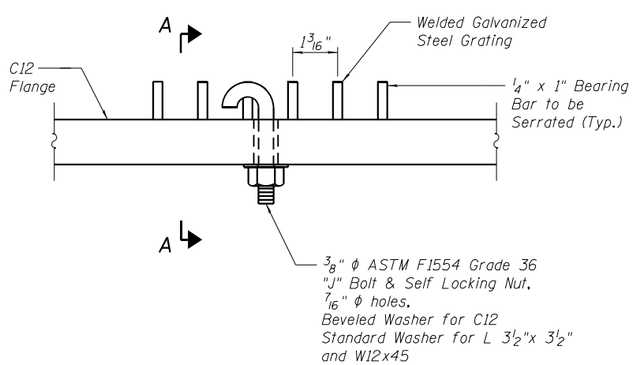

"J" BOLT DETAIL

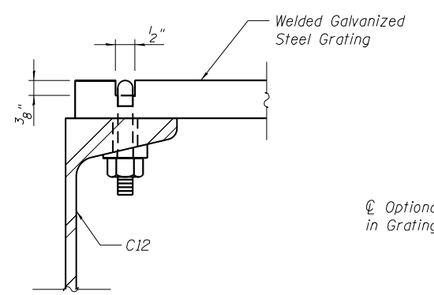

SECTION A-A

(C12 Shown, L 3 1/2"x 3 1/2" and W12x45 similar)

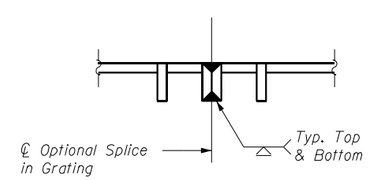

OPTIONAL SPLICE IN GRATING

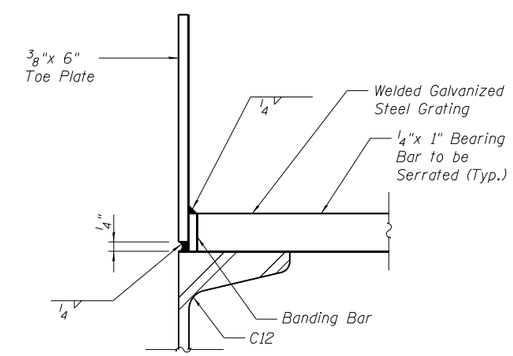

SECTION B-B

Notes:
See sheet 30 of 49 for Walkway Notes.
See sheet 31 of 49 for Handrail Details.
See sheet 30 of 49 for Section C-C.

ORIGINAL:	UPDATED:								
DLZ Illinois, Inc.	LIN ENGINEERING, LTD. Consulting Engineers Springfield, Illinois		DESIGNED - ZJH	REVISED	STATE OF ILLINOIS DEPARTMENT OF TRANSPORTATION	WALKWAY STRUCTURE NO. 032-9906	F.A.I. RTE.	SECTION	COUNTY	TOTAL SHEETS	SHEET NO.
			CHECKED - PRD JCZ	REVISED			80	((32, 47-4)VB, HBR-3) BR, BRR	GRUNDY	143	86
			DRAWN - BAE	REVISED					CONTRACT NO. 66295		
		DATE - 03/25/22	CHECKED - ZJH JCZ	REVISED		SHEET NO. 29 OF 49 SHEETS		ILLINOIS	FED. AID PROJECT		

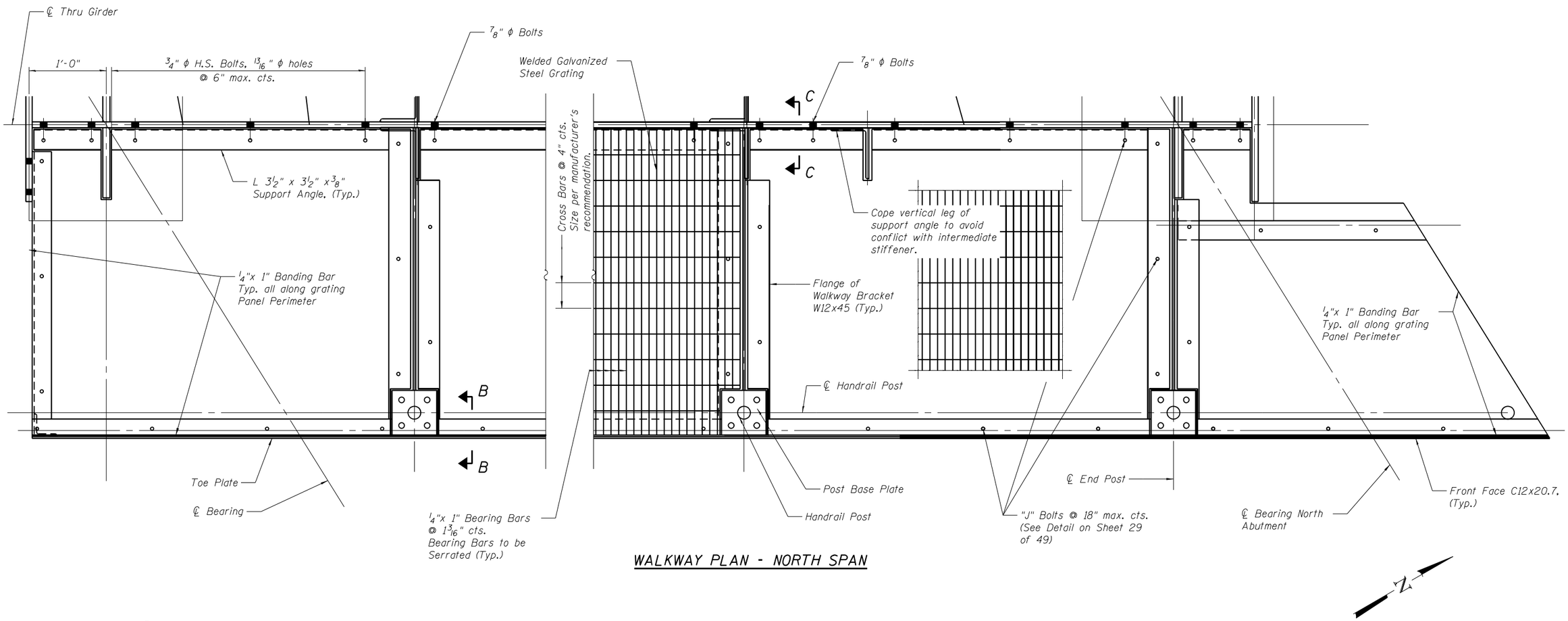

WALKWAY PLAN - NORTH SPAN

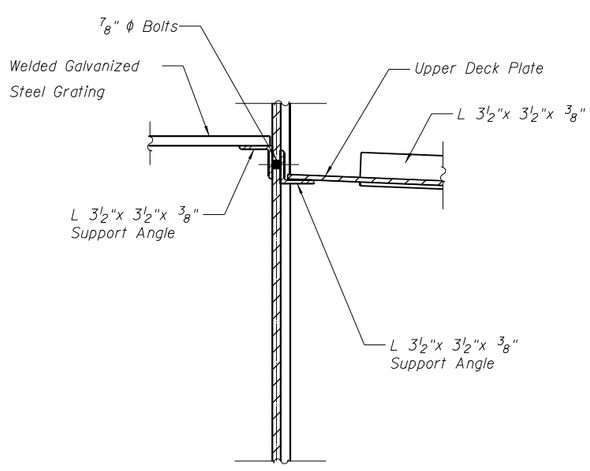

SECTION C-C

Notes:

All walkway support steel, including angles, channels, and wide flange beams, shall conform to AASHTO M270, Gr. 50.

For Handrail Details see sheet 31 of 49 "Handrail Details."

The welded galvanized steel grating, banding bars, toe plates, and "J" bolts will be paid for as Steel Grate Walkway. All other steel members and their connections that support the walkway will be paid for as Furnishing and Erecting Structural Steel.

See sheet 29 of 49 for Section B-B.

ORIGINAL: DLZ DLZ Illinois, Inc. UPDATED: LIN ENGINEERING, LTD. Consulting Engineers Springfield, Illinois	DESIGNED - ZJH	REVISED	STATE OF ILLINOIS DEPARTMENT OF TRANSPORTATION
	CHECKED - PRD JCZ	REVISED	
	DRAWN - BAE	REVISED	
DATE - 03/25/22	CHECKED - ZJH JCZ	REVISED	

WALKWAY
STRUCTURE NO. 032-9906
SHEET NO. 30 OF 49 SHEETS

F.A.I. RTE.	SECTION	COUNTY	TOTAL SHEETS	SHEET NO.
80	(32, 47-4)VB, HBR-3) BR, BRR	GRUNDY	143	87
		CONTRACT NO. 66295		
	ILLINOIS	FED. AID PROJECT		

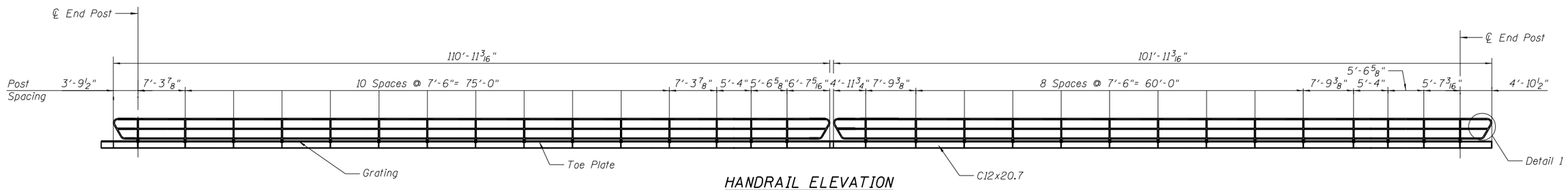

HANDRAIL ELEVATION

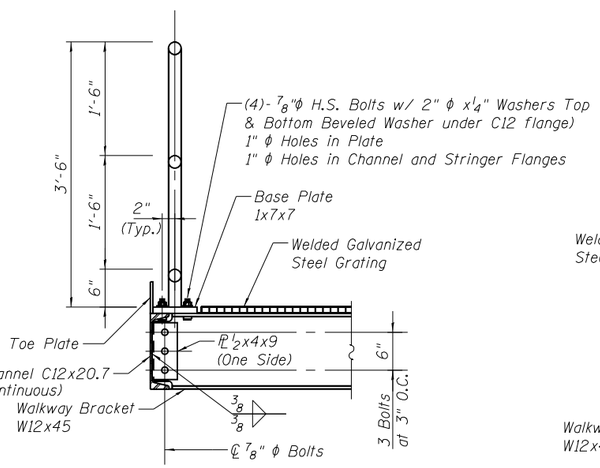

SECTION B-B

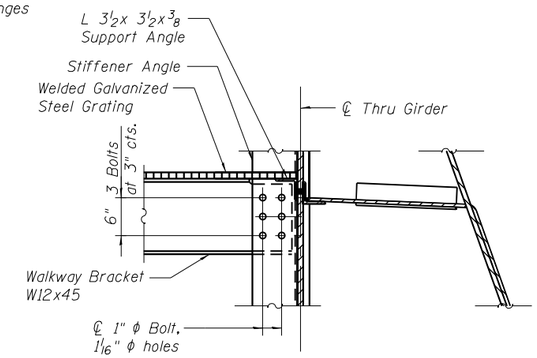

SECTION C-C

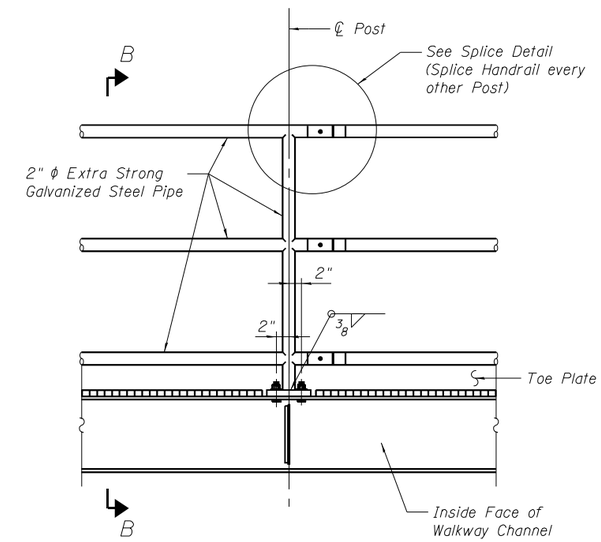

TYPICAL POST

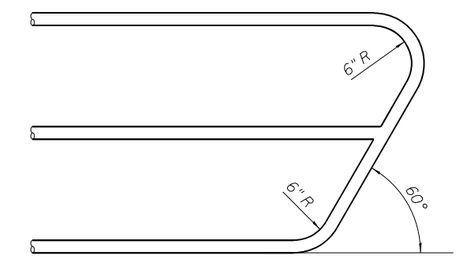

DETAIL 1

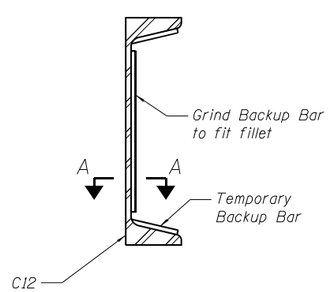

CHANNEL SPLICE

(Location Optional)

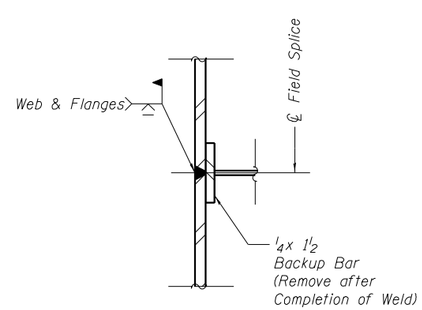

SECTION A-A

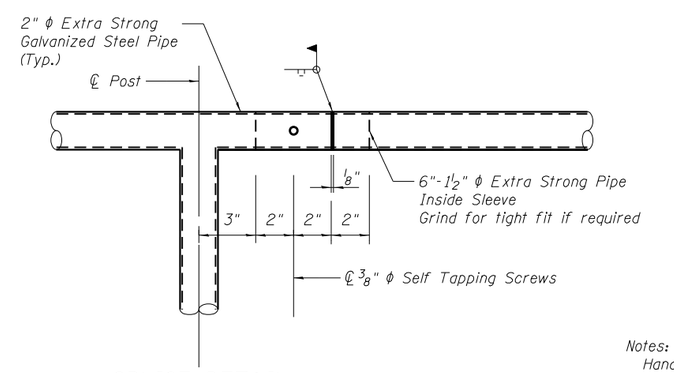

SPLICE DETAIL

Notes:
Handrail pipe shall conform to ASTM A500, Grade B.
The handrail pipes, posts, base plates, and base plate fasteners will be paid for as Pipe Handrail, Special.

ORIGINAL: DLZ Illinois, Inc. UPDATED: LIN ENGINEERING, LTD. Consulting Engineers Springfield, Illinois		DESIGNED - ZJH	REVISED	STATE OF ILLINOIS DEPARTMENT OF TRANSPORTATION	HANDRAIL DETAILS STRUCTURE NO. 032-9906	F.A.I. RTE.	SECTION	COUNTY	TOTAL SHEETS	SHEET NO.
		CHECKED - PRD JCZ	REVISED			80	(132, 47-4)VB, HBR-3) BR, BRR	GRUNDY	143	88
		DRAWN - BAE	REVISED					CONTRACT NO. 66295		
	DATE - 03/25/22	CHECKED - ZJH JCZ	REVISED		SHEET NO. 31 OF 49 SHEETS		ILLINOIS	FED. AID PROJECT		

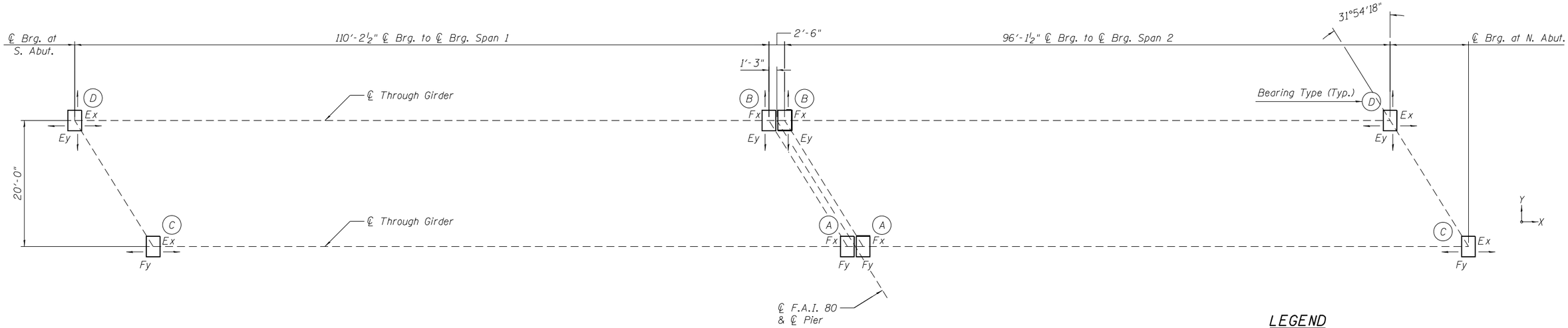

LEGEND

F-Fixed Bearing
E-Expansion Bearing

BEARING KEY PLAN

BEARING SERVICE LOADS

V_D = 221 Kips/Bearing
V_{L+I} = 431 Kips/Bearing
V_{TOT} = 652 Kips/Bearing
H_{MIN} = 24 Kips/Bearing

Note:

Arrow indicates freedom of movement direction.

ORIGINAL: DLZ DLZ Illinois, Inc. UPDATED: LIN ENGINEERING LTD. Consulting Engineers Springfield, Illinois		DESIGNED - ZJH	REVISED
		CHECKED - PRD MTH	REVISED
		DRAWN - BAE	REVISED
	DATE - 03/25/22	CHECKED - ZJH MTH	REVISED

STATE OF ILLINOIS
DEPARTMENT OF TRANSPORTATION

BEARING LAYOUT
STRUCTURE NO. 032-9906
SHEET NO. 32 OF 49 SHEETS

F.A.I. RTE.	SECTION	COUNTY	TOTAL SHEETS	SHEET NO.
80	((32, 47-4)VB, HBR-3) BR, BRR	GRUNDY	143	89
		CONTRACT NO. 66295		
	ILLINOIS	FED. AID PROJECT		

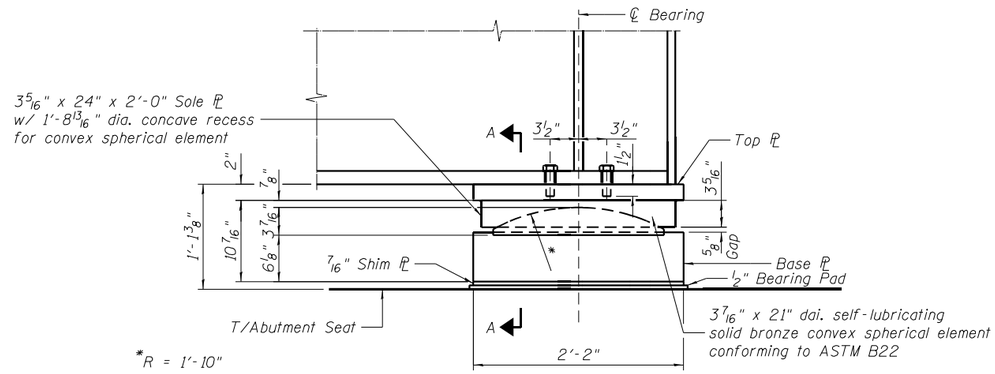

BEARING TYPE A ELEVATION

(Anchor bolts and floorbeams not shown for clarity)

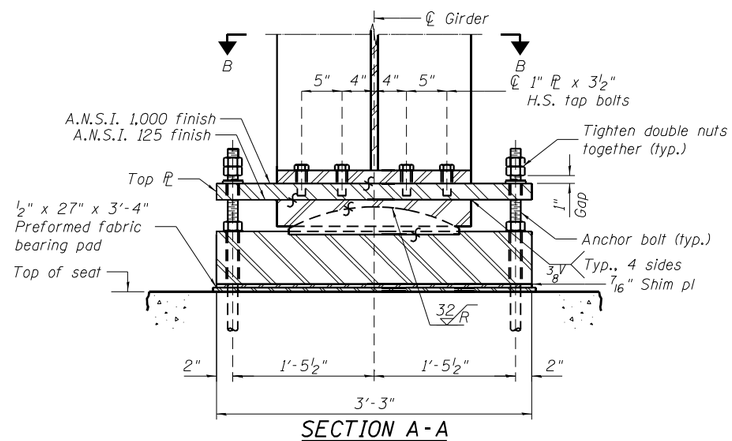

SECTION A-A

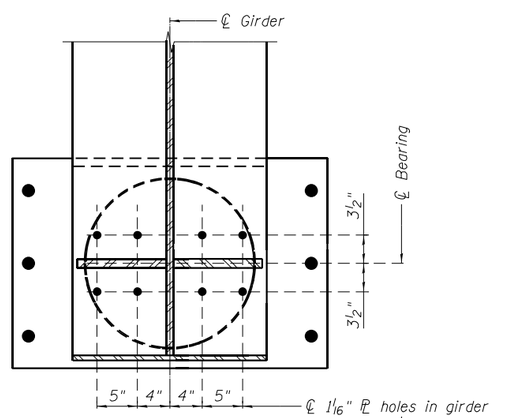

SECTION B-B

Scale: 1 1/2" = 1'-0"

(End floorbeam and interior floorbeam not shown for clarity)

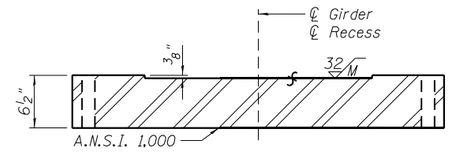

SECTION C-C

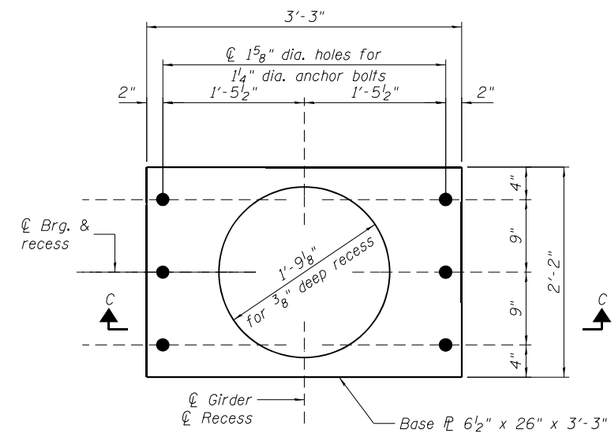

BASE PLATE DETAIL

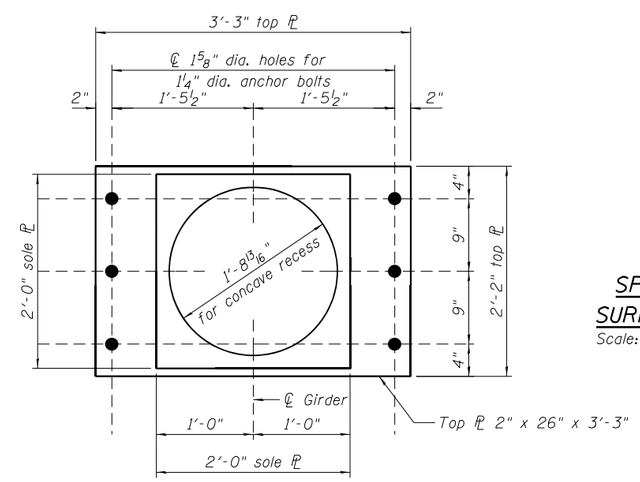

TOP & SOLE PLATE DETAILS

(Underside shown)

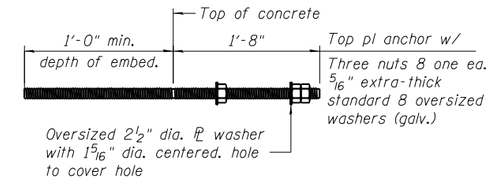

ANCHOR BOLT ASSEMBLY DETAIL

Notes:

1. All surfaces marked "S" shall be machine finished by an automatic process. Surface roughness of sliding and rotational elements shall not exceed the limits indicated in accordance with ANSI/ASME B46.1, surface texture.
2. Bearing assemblies shall be stress relieved after welding.
3. Bearings shall be assembled complete in the shop and checked for fit and bearing of all contact surfaces, then match marked for installation in the field.
4. Structural steel plate for the bearings shall conform to ASTM A709 gr. 36 or ASTM A36 specifications.
5. Bronze elements shall conform to ASTM B22, copper alloy C86300.
6. Tap bolts shall be 1" diameter high strength bolts conforming with ASTM F3125 grade A325, type 3.
7. Floorbeams near bearings shall have their bottom flanges coped to avoid conflict with anchor bolts.
8. Anchor bolts shall be made from high-strength material meeting the requirements of ASTM F1554, grade 105. The rods shall be supplied with heavy hex nuts meeting the requirements of ASTM A194 grade 2H or ASTM A563 grade DH and hardened washers meeting the requirements of ASTM F436. securing rods and hardware shall be galvanized in accordance with ASTM F2329.
9. All bearing plates, anchor bolts, nuts and washers shall be galvanized according to AASHTO M111 or M232 as applicable.

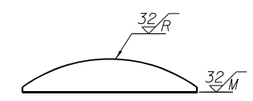

SPHERICAL ELEMENT SURFACE FINISH DETAIL

Scale: N.T.S.

TYPE A BEARING BILL OF MATERIAL

ITEM	UNIT	TOTAL
Anchor Bolts, 1 1/4"	EACH	12
Steel Bearing Assembly	EACH	2

ORIGINAL:	UPDATED:									
DLZ Illinois, Inc.	LIN ENGINEERING, LTD. Consulting Engineers Springfield, Illinois		DESIGNED - RJM	REVISED	STATE OF ILLINOIS DEPARTMENT OF TRANSPORTATION	BEARING DETAILS – TYPE A STRUCTURE NO. 032–9906	F.A.I. RTE.	SECTION	COUNTY	TOTAL SHEETS	SHEET NO.
			CHECKED - MTH	REVISED			80	((32, 47-4)VB, HBR-3) BR, BRR	GRUNDY	143	90
			DRAWN - LGC	REVISED					CONTRACT NO. 66295		
		DATE - 03/25/22	CHECKED - RJM	REVISED		SHEET NO. 33 OF 49 SHEETS		ILLINOIS	FED. AID PROJECT		

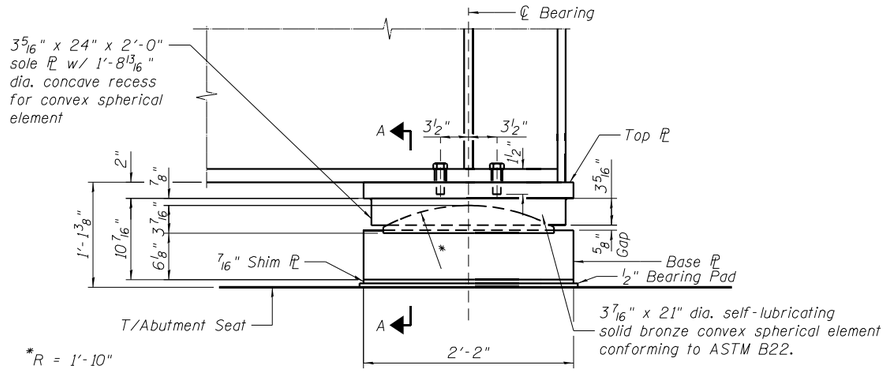

BEARING TYPE B ELEVATION

(Anchor bolts and floorbeams not shown for clarity)

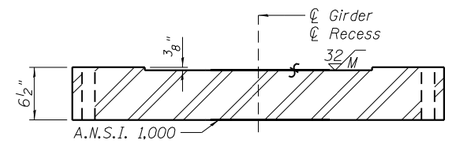

SECTION C-C

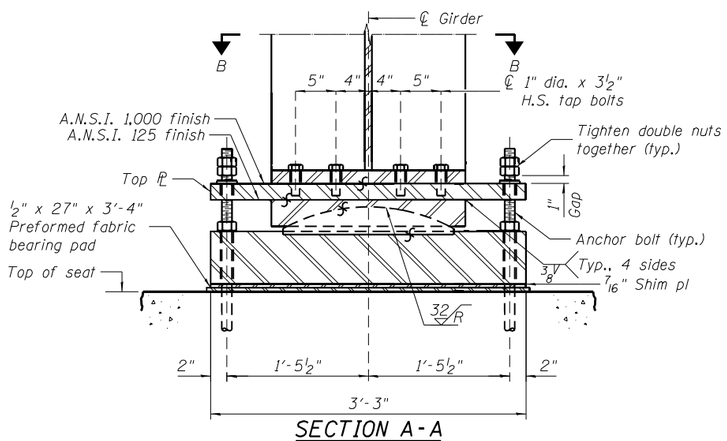

SECTION A-A

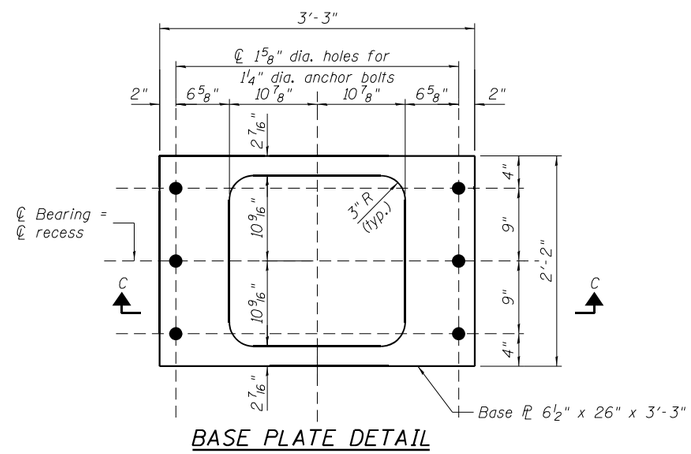

BASE PLATE DETAIL

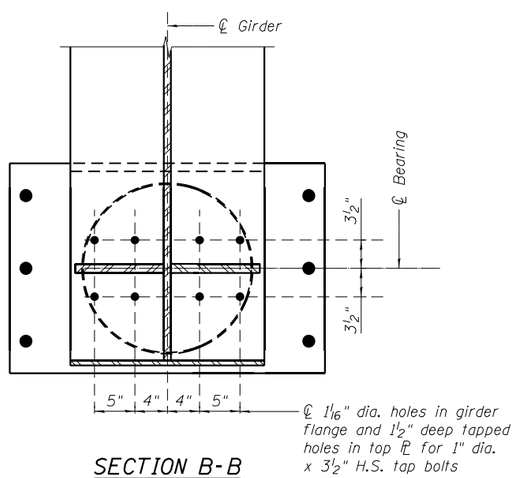

SECTION B-B

(End floorbeam and interior floorbeam not shown for clarity)

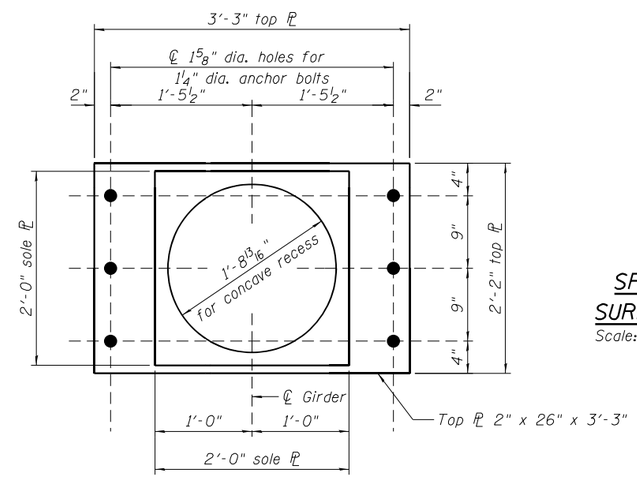

TOP & SOLE PLATE DETAILS

(Underside shown)

Notes:

1. All surfaces marked "S" shall be machine finished by an automatic process. Surface roughness of sliding and rotational elements shall not exceed the limits indicated in accordance with ANSI/ASME B46.1, surface texture.
2. Bearing assemblies shall be stress relieved after welding.
3. Bearings shall be assembled complete in the shop and checked for fit and bearing of all contact surfaces, then match marked for installation in the field.
4. Structural steel plate for the bearings shall conform to ASTM A709 gr. 36 or ASTM A36 specifications.
5. Bronze elements shall conform to ASTM B22, copper alloy C86300.
6. Tap bolts shall be 1" diameter high strength bolts conforming with ASTM F3125 grade A325, type 3.
7. Floorbeams near bearings shall have their bottom flanges coped to avoid conflict with anchor bolts.
8. Anchor bolts shall be made from high-strength material meeting the requirements of ASTM F1554, grade 105. The rods shall be supplied with heavy hex nuts meeting the requirements of ASTM A194 grade 2H or ASTM A563 grade DH and hardened washers meeting the requirements of ASTM F436. securing rods and hardware shall be galvanized in accordance with ASTM F2329.
9. All bearing plates, anchor bolts, nuts and washers shall be galvanized according to AASHTO M111 or M232 as applicable.

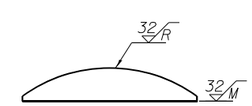

SPHERICAL ELEMENT SURFACE FINISH DETAIL

Scale: N.T.S.

TYPE B BEARING BILL OF MATERIAL

ITEM	UNIT	TOTAL
Anchor Bolts, 1 1/4"	EACH	12
Steel Bearing Assembly	EACH	2

ORIGINAL:	UPDATED:			
DLZ Illinois, Inc.	LIN ENGINEERING, LTD. Consulting Engineers Springfield, Illinois		DESIGNED -	REVISED
			CHECKED -	REVISED
			DRAWN -	REVISED
		DATE - 03/25/22	CHECKED -	REVISED

STATE OF ILLINOIS
DEPARTMENT OF TRANSPORTATION

BEARING DETAILS – TYPE B
STRUCTURE NO. 032–9906

SHEET NO. 34 OF 49 SHEETS

F.A.I. RTE.	SECTION	COUNTY	TOTAL SHEETS	SHEET NO.
80	((32, 47-4)VB, HBR-3) BR, BRR	GRUNDY	143	91
		CONTRACT NO. 66295		
	ILLINOIS	FED. AID PROJECT		

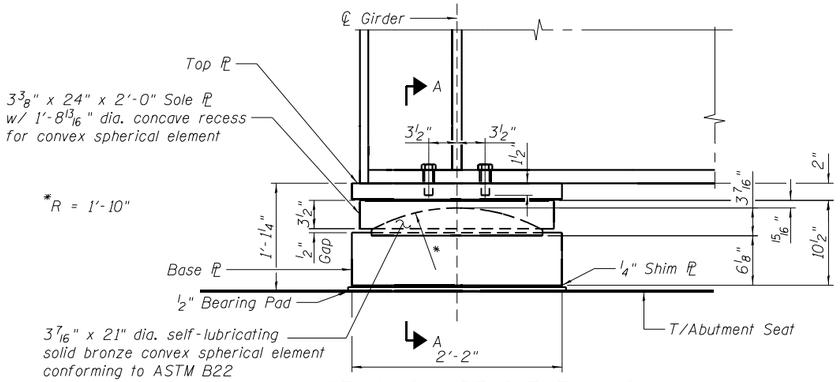

BEARING TYPE C ELEVATION

(Anchor bolts and floorbeams not shown for clarity)

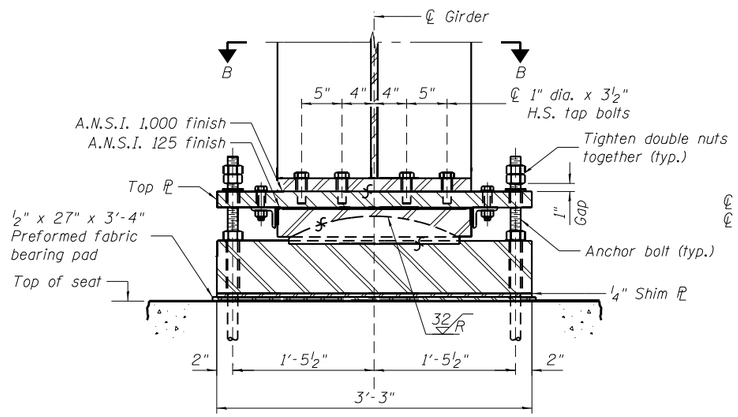

SECTION A-A

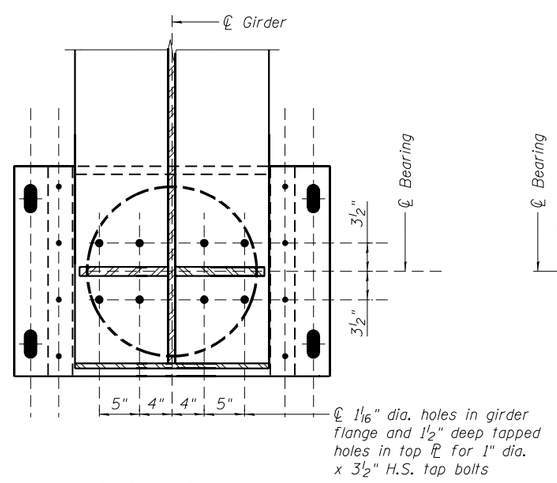

SECTION B-B

(End floorbeam and interior floorbeam not shown for clarity)

Note:
1/16" notch in sole PL for 1/8" x 2" x 2'-2" sheet PTFE epoxy-bonded to sole PL

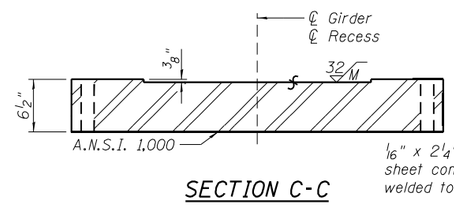

SECTION C-C

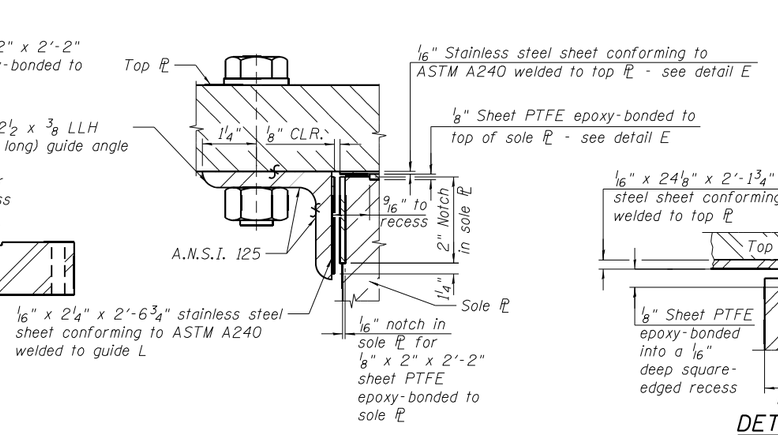

DETAIL D

(Shown in section near ℄ of bearing)

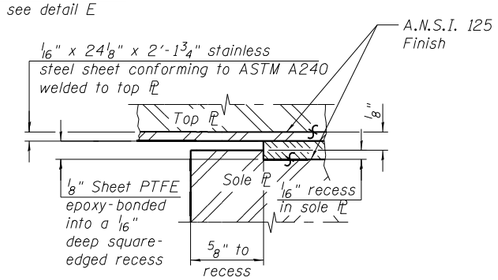

DETAIL E

(Shown in section near ℄ of girder)

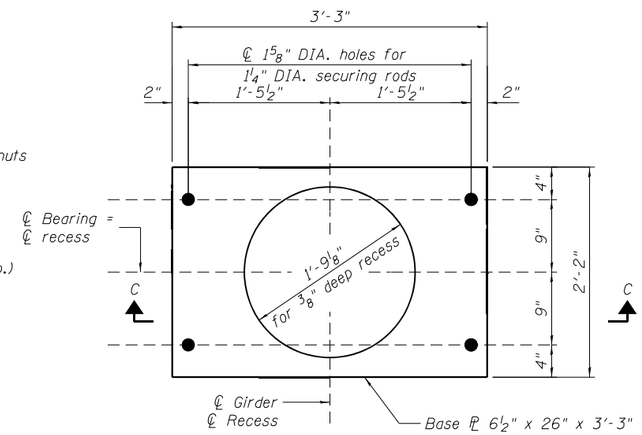

BASE PLATE DETAIL

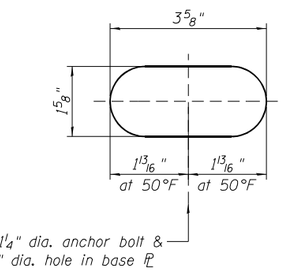

SLOTTED HOLE DETAIL

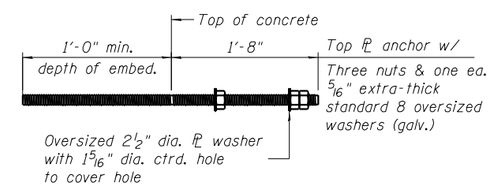

ANCHOR BOLT DETAIL

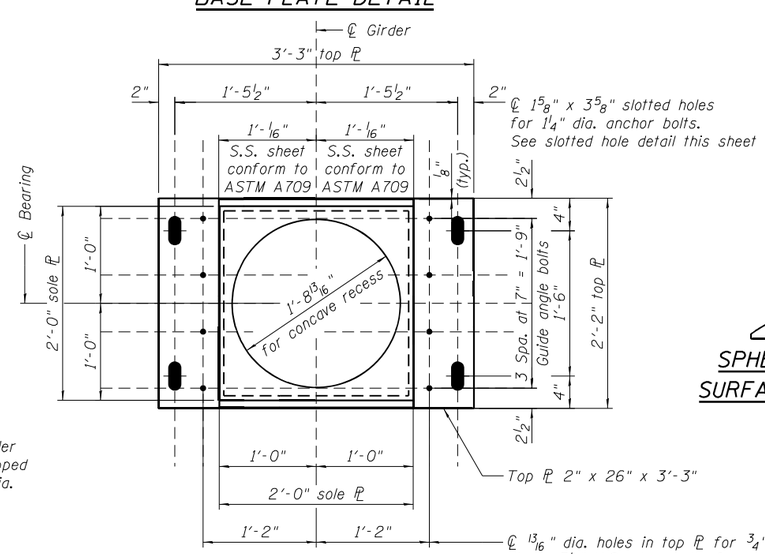

TOP & SOLE PLATE DETAILS

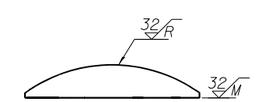

SPHERICAL ELEMENT SURFACE FINISH DETAIL

Notes:

1. All surfaces marked "⌇" shall be machine finished by an automatic process. Surface roughness of sliding and rotational elements shall not exceed the limits indicated in accordance with ANSI/ASME B46.1. surface texture.
2. Bearing assemblies shall be stress relieved after welding.
3. Bearings shall be assembled complete in the shop and checked for fit and bearing of all contact surfaces, then match marked for installation in the field.
4. Structural steel plate for the bearings shall conform to ASTM A709 gr. 36 or ASTM A36 specifications.
5. Bronze elements shall conform to ASTM B22, copper alloy C86300.
6. Tap bolts shall be 1" diameter high strength bolts conforming with ASTM F3125 grade A325, type 3.
7. Floorbeams near bearings shall have their bottom flanges coped to avoid conflict with anchor bolts.
8. Anchor bolts shall be made from high-strength material meeting the requirements of ASTM F1554, grade 105. The rods shall be supplied with heavy hex nuts meeting the requirements of ASTM A194 grade 2H or ASTM A563 grade DH and hardened washers meeting the requirements of ASTM F436. securing rods and hardware shall be galvanized in accordance with ASTM F2329.
9. All bearing plates, anchor bolts, nuts and washers shall be galvanized according to AASHTO M111 or M232 as applicable.

TYPE C BEARING BILL OF MATERIAL

ITEM	UNIT	TOTAL
Anchor Bolts, 1 1/4"	EACH	8
Steel Bearing Assembly	EACH	2

ORIGINAL: DLZ Illinois, Inc. UPDATED: LIN ENGINEERING, LTD. Consulting Engineers Springfield, Illinois

	DESIGNED - RJM	REVISED
	CHECKED - MTH	REVISED
	DRAWN - LGC	REVISED
DATE - 03/25/22	CHECKED - RJM	REVISED

STATE OF ILLINOIS
DEPARTMENT OF TRANSPORTATION

BEARING DETAILS – TYPE C
STRUCTURE NO. 032-9906

SHEET NO. 35 OF 49 SHEETS

F.A.I. RTE.	SECTION	COUNTY	TOTAL SHEETS	SHEET NO.
80	(32, 47-4)VB, HBR-3) BR, BRR	GRUNDY	143	92
		CONTRACT NO. 66295		
		ILLINOIS	FED. AID PROJECT	

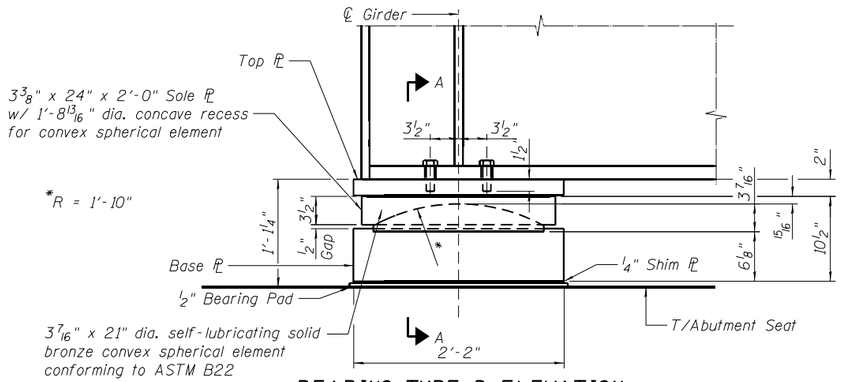

BEARING TYPE D ELEVATION

(Anchor bolts and floorbeams not shown for clarity)

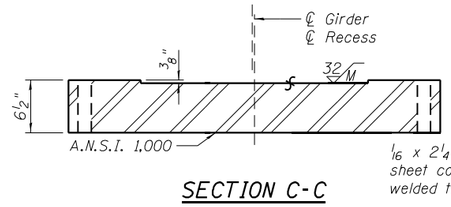

SECTION C-C

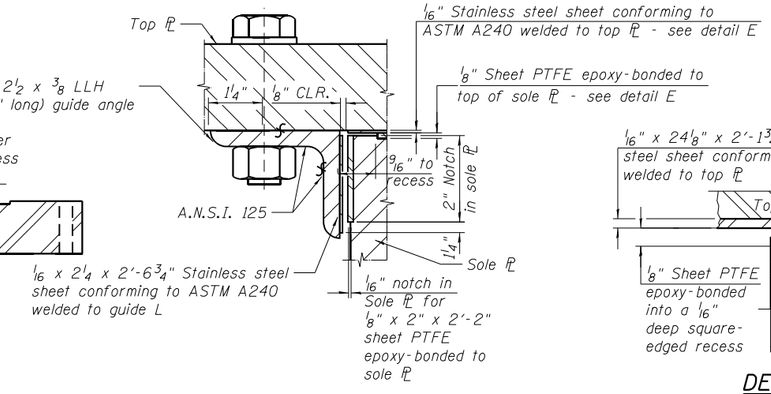

DETAIL D

(Shown in section near ℄ of bearing)

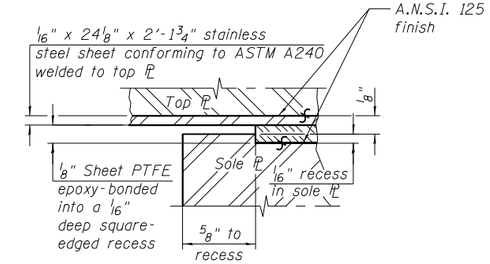

DETAIL E

(Shown in section near ℄ of girder)

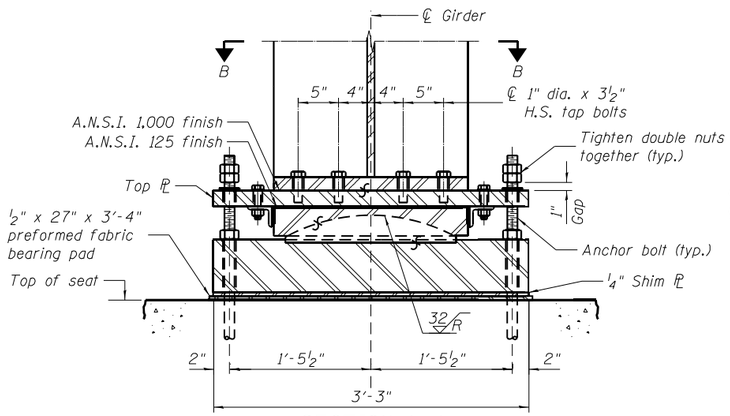

SECTION A-A

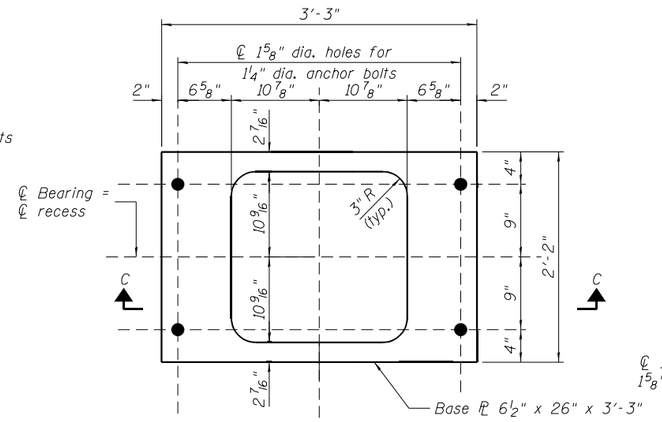

BASE PLATE DETAIL

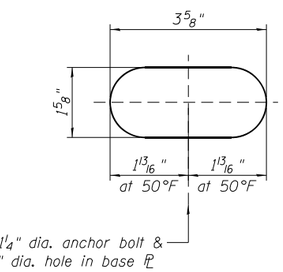

SLOTTED HOLE DETAIL

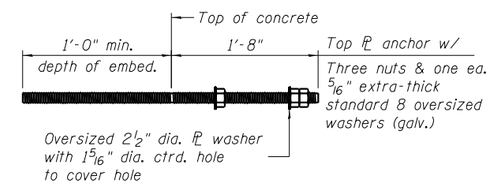

ANCHOR BOLT DETAIL

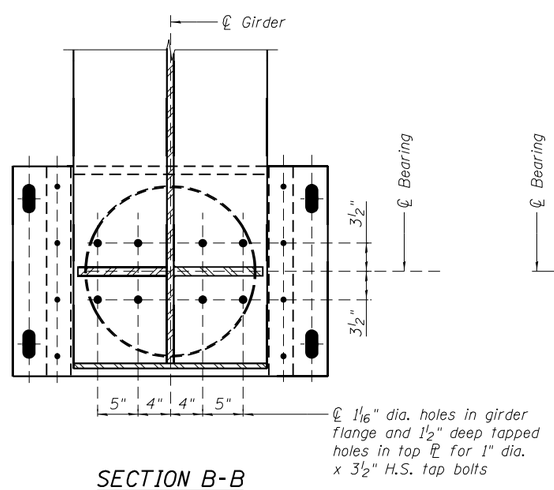

SECTION B-B

(End floorbeam and interior floorbeam not shown for clarity)

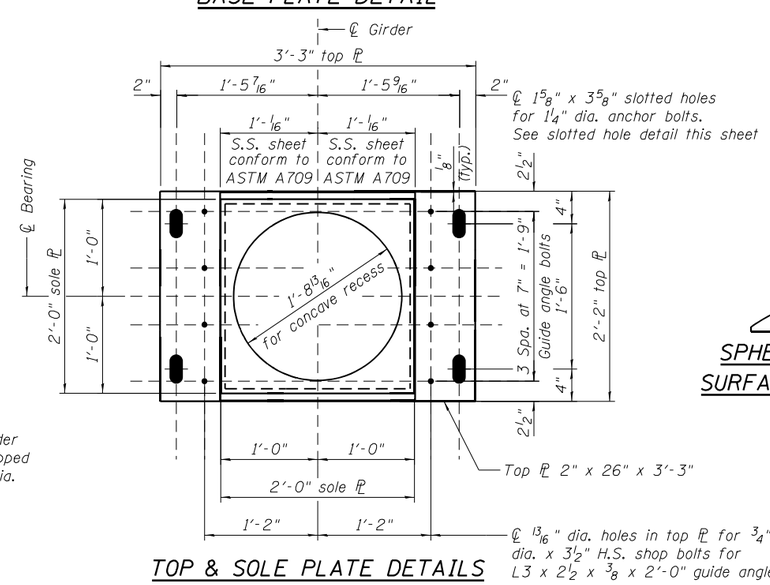

TOP & SOLE PLATE DETAILS

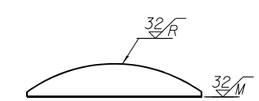

SPHERICAL ELEMENT SURFACE FINISH DETAIL

Notes:

1. All surfaces marked "⦜" shall be machine finished by an automatic process. Surface roughness of sliding and rotational elements shall not exceed the limits indicated in accordance with ANSI/ASME B46.1. surface texture.
2. Bearing assemblies shall be stress relieved after welding.
3. Bearings shall be assembled complete in the shop and checked for fit and bearing of all contact surfaces, then match marked for installation in the field.
4. Structural steel plate for the bearings shall conform to ASTM A709 gr. 36 or ASTM A36 specifications.
5. Bronze elements shall conform to ASTM B22. copper alloy C86300.
6. Tap bolts shall be 1" diameter high strength bolts conforming with ASTM F3125 grade A325, type 3.
7. Floorbeams near bearings shall have their bottom flanges coped to avoid conflict with anchor bolts.
8. Anchor bolts shall be made from high-strength material meeting the requirements of ASTM F1554. grade 105. The rods shall be supplied with heavy hex nuts meeting the requirements of ASTM A194 grade 2H or ASTM A563 grade DH and hardened washers meeting the requirements of ASTM F436. securing rods and hardware shall be galvanized in accordance with ASTM F2329.
9. All bearing plates, anchor bolts, nuts and washers shall be galvanized according to AASHTO M111 or M232 as applicable.

TYPE D BEARING BILL OF MATERIAL

ITEM	UNIT	TOTAL
Anchor Bolts, 1 1/4"	EACH	8
Steel Bearing Assembly	EACH	2

ORIGINAL: DLZ Illinois, Inc. UPDATED: LIN ENGINEERING, LTD. Consulting Engineers Springfield, Illinois

	DESIGNED - RJM	REVISED
	CHECKED - MTH	REVISED
	DRAWN - LGC	REVISED
DATE - 03/25/22	CHECKED - RJM	REVISED

STATE OF ILLINOIS
DEPARTMENT OF TRANSPORTATION

BEARING DETAILS – TYPE D
STRUCTURE NO. 032–9906

SHEET NO. 36 OF 49 SHEETS

F.A.I. RTE.	SECTION	COUNTY	TOTAL SHEETS	SHEET NO.
80	((32, 47-4)VB, HBR-3) BR, BRR	GRUNDY	143	93
		CONTRACT NO. 66295		
	ILLINOIS	FED. AID PROJECT		

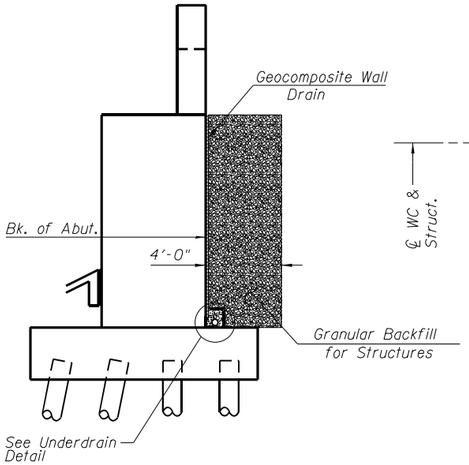

TYPICAL SECTION

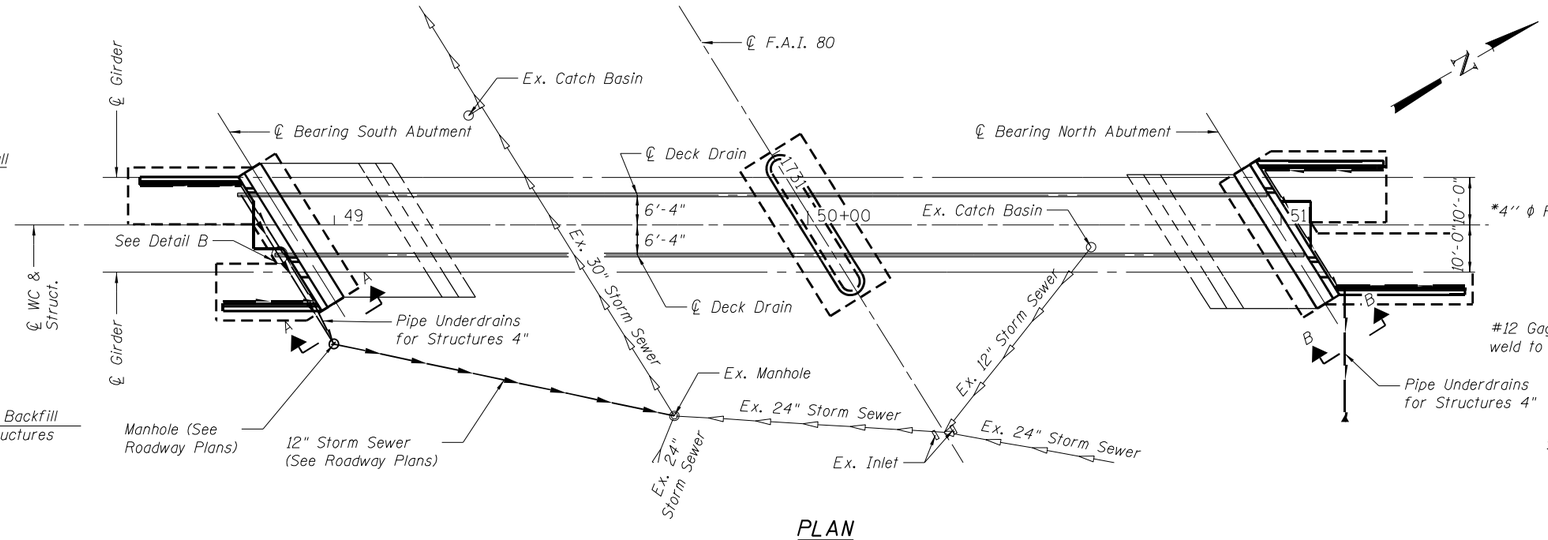

PLAN

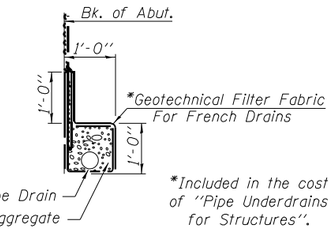

UNDERDRAIN DETAIL

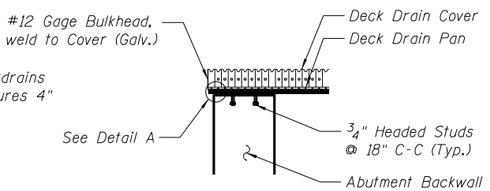

SECTION B-B

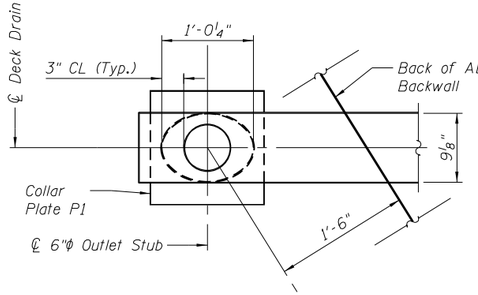

DETAIL "B"

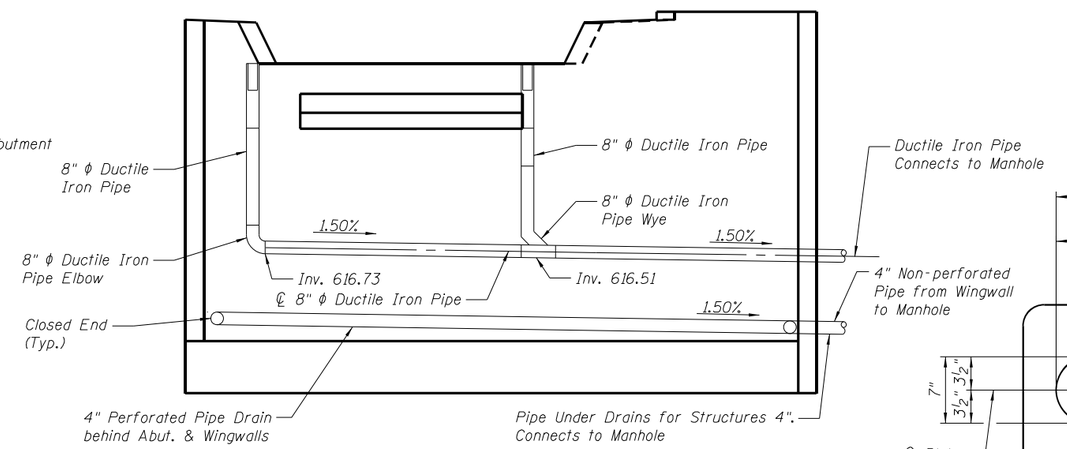

REAR ELEVATION SOUTH ABUTMENT

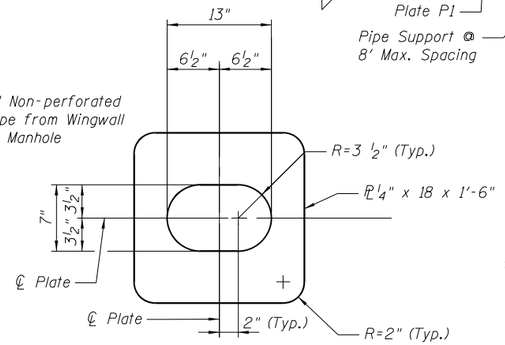

PLATE P1

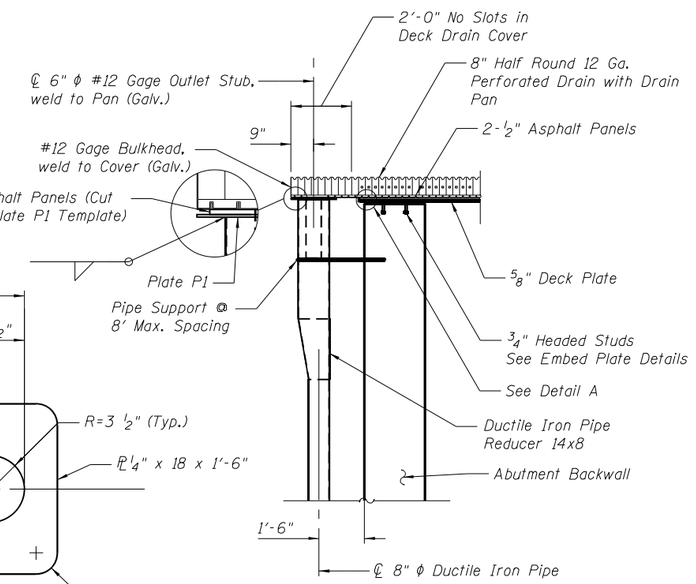

SECTION A-A

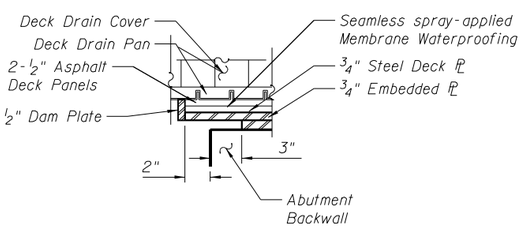

DETAIL "A"

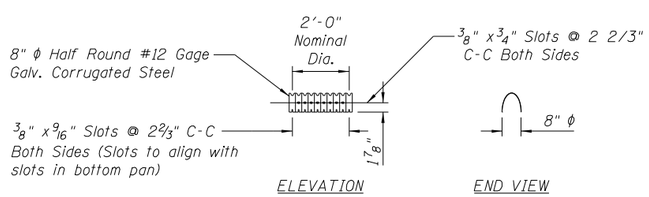

DECK DRAIN COVER

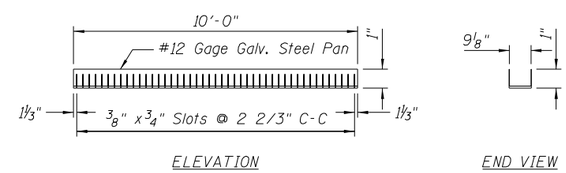

DECK DRAIN BOTTOM PAN

BILL OF MATERIAL

ITEM	UNIT	TOTAL
Drainage System for Structures	L. SUM	1

ORIGINAL:	UPDATED:								
DLZ Illinois, Inc.	LIN ENGINEERING LTD. Consulting Engineers Springfield, Illinois		DESIGNED - ZJH	REVISED	STATE OF ILLINOIS DEPARTMENT OF TRANSPORTATION	DECK DRAINAGE STRUCTURE NO. 032-9906	F.A.I. RTE.	SECTION	COUNTY	TOTAL SHEETS	SHEET NO.
			CHECKED - PRD JCZ	REVISED			80	(32, 47-4)VB, HBR-3) BR, BRR	GRUNDY	143	94
			DRAWN - BAE	REVISED					CONTRACT NO. 66295		
		DATE - 03/25/22	CHECKED - ZJH JCZ	REVISED		SHEET NO. 37 OF 49 SHEETS		ILLINOIS	FED. AID PROJECT		

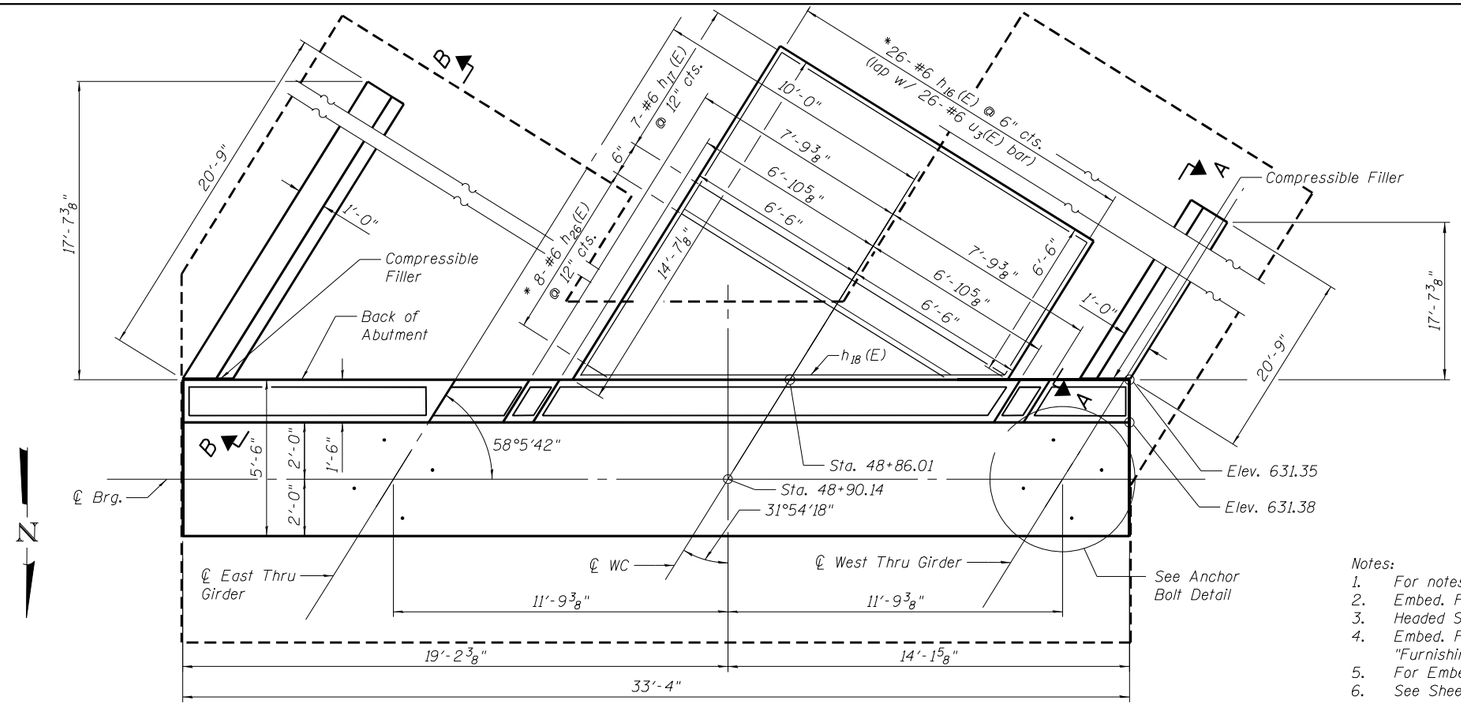

TOP VIEW

* See Cutting Diagram on Sheet 41 of 49.
** #5 = 2'-7"
#7 = 4'-5"

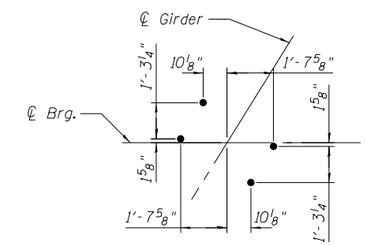

ANCHOR BOLT DETAIL

Notes:
1. For notes see sheet 39 of 49.
2. Embed. Plates Shall Conform to AASHTO M270, Grade 50.
3. Headed Studs Shall Conform to AASHTO M169, Grade 1015.
4. Embed. Plates with Studs are Paid for as Part of "Furnishing and Erecting Structural Steel".
5. For Embed. Plate Details See Sheet 39 of 49.
6. See Sheet 26 of 49 for Section M-M.

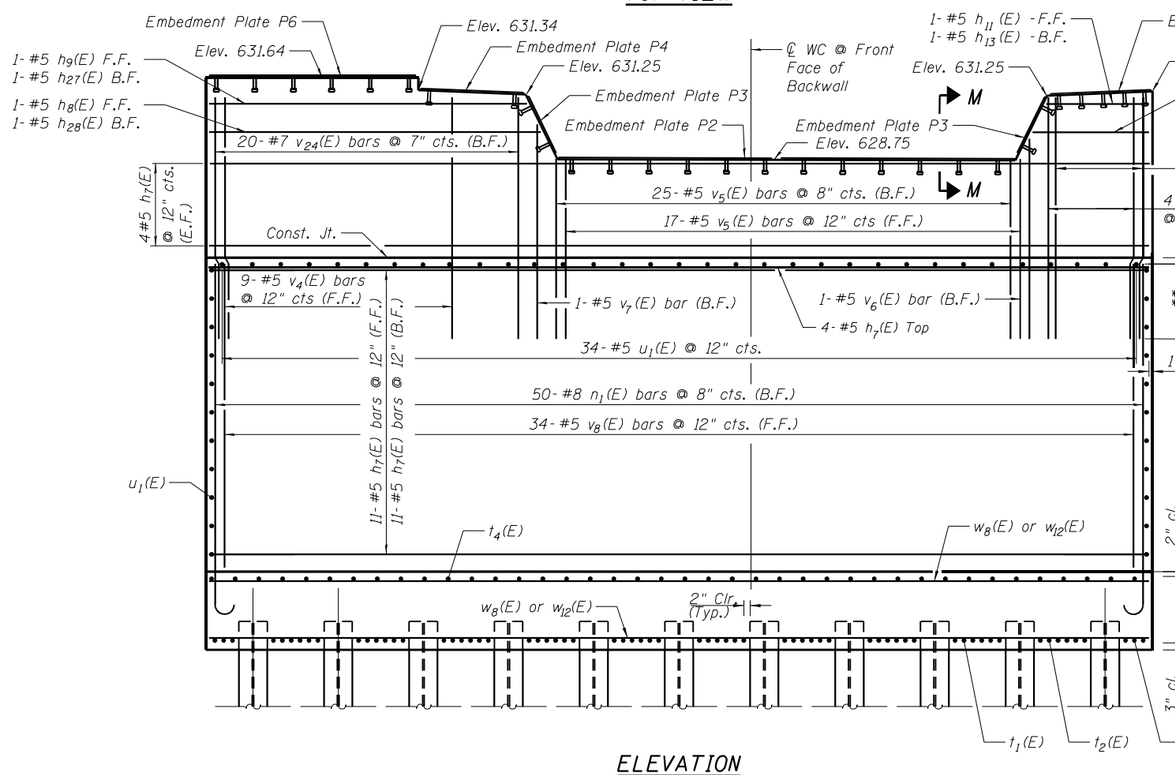

ELEVATION

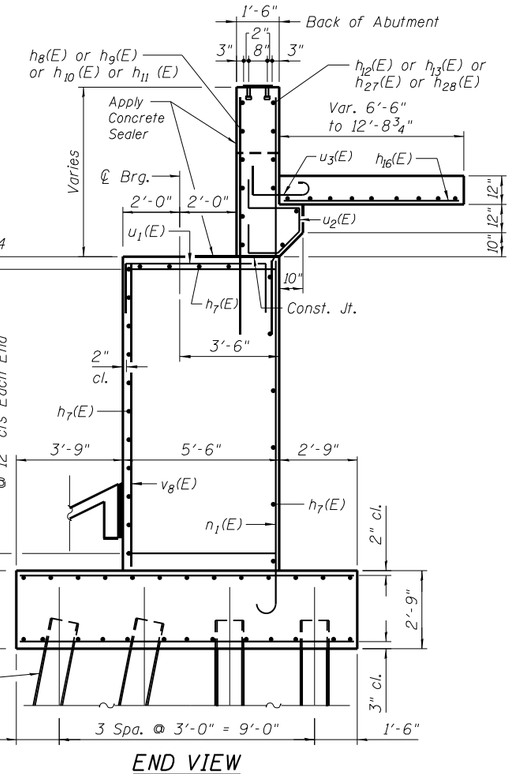

END VIEW

ORIGINAL:	UPDATED:										
DLZ DLZ Illinois, Inc.	LIN ENGINEERING LTD. Consulting Engineers Springfield, Illinois	DESIGNED - ZJH	REVISED	STATE OF ILLINOIS DEPARTMENT OF TRANSPORTATION	SOUTH ABUTMENT – 1 STRUCTURE NO. 032–9906	F.A.I. RTE.	SECTION	COUNTY	TOTAL SHEETS	SHEET NO.
		CHECKED - PRD MTH	REVISED			80	(G32, 47-4)VB, HBR-3) BR, BRR	GRUNDY	143	95
		DRAWN - BAE	REVISED					CONTRACT NO. 66295		
	DATE - 03/25/22	CHECKED - ZJH MTH	REVISED		SHEET NO. 38 OF 49 SHEETS			ILLINOIS FED. AID PROJECT		

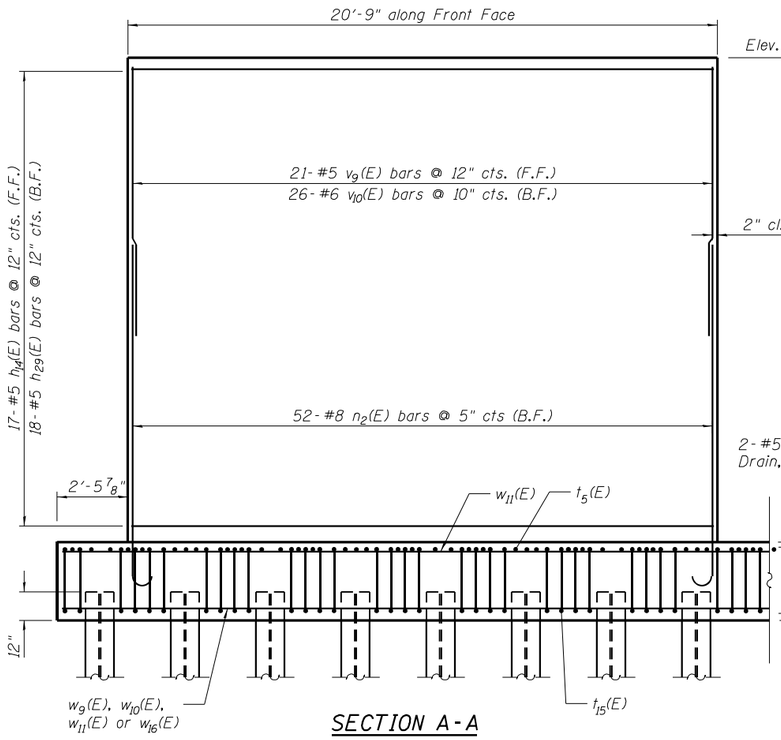

SECTION A-A

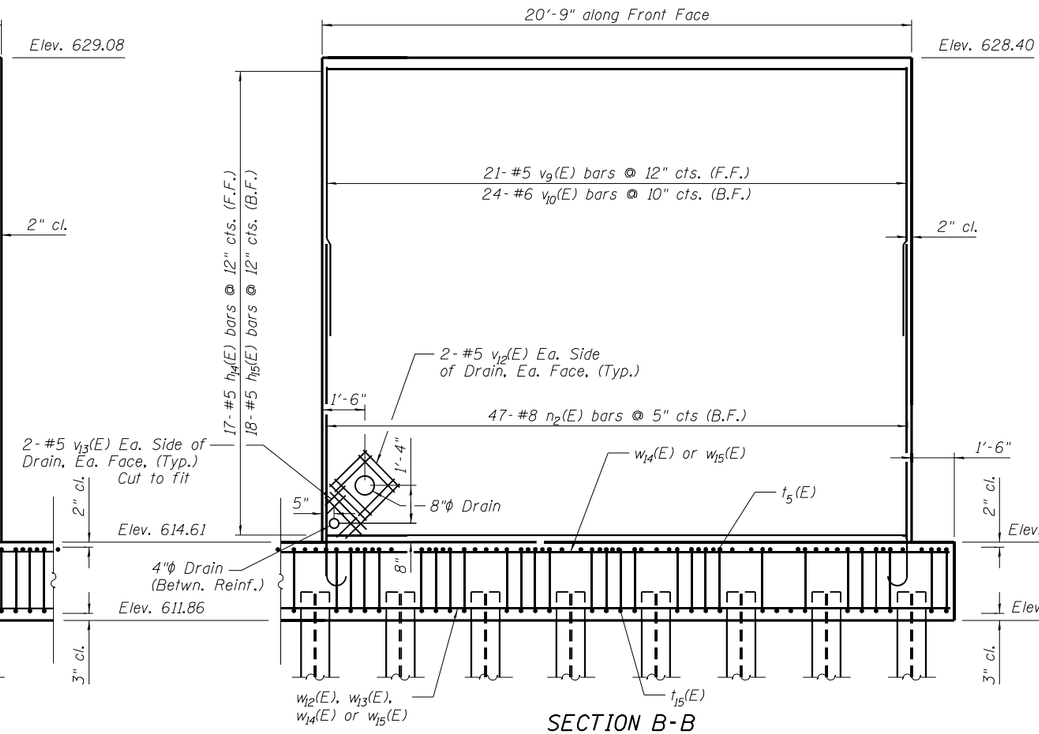

SECTION B-B

Note:
Cut n_2, v_{10}, h_{14} or h_{15} as required to clear drains.

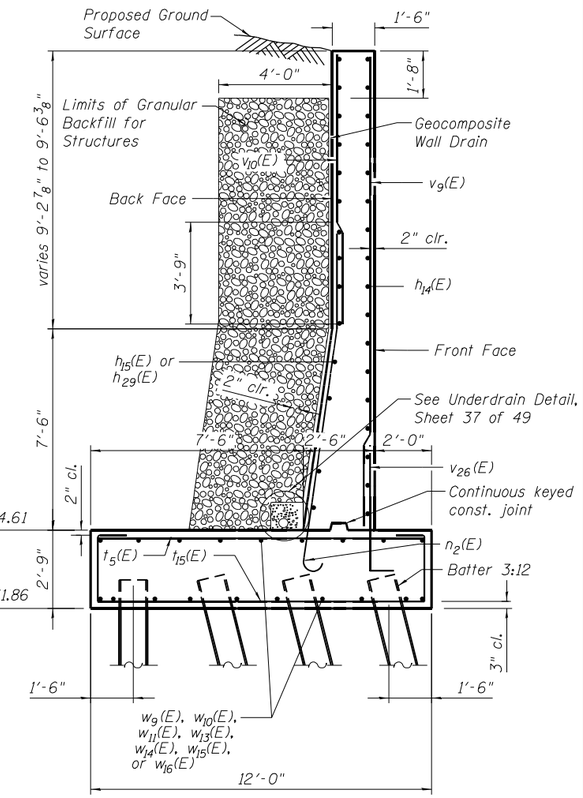

SECTION THRU WINGWALLS

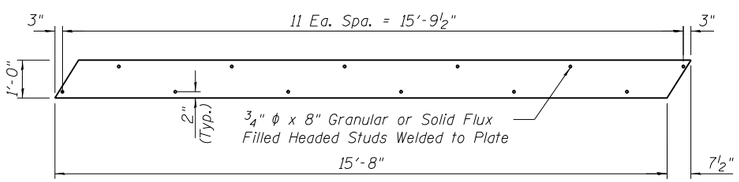

PLATE P2

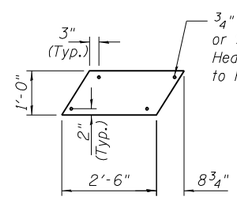

PLATE P3

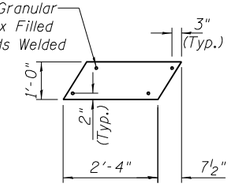

PLATE P4

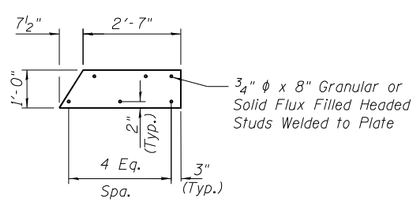

PLATE P5

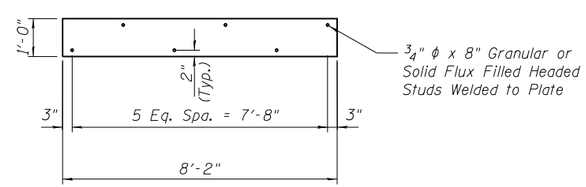

PLATE P6

EMBEDMENT PLATE DETAILS

Notes:
For details of piles see sheet 47 of 49.
For Bearing Details see Sheet 32-36 of 49.
Contractor to coordinate anchor bolt installation with Roll-In procedure.

ORIGINAL: DLZ Illinois, Inc. / UPDATED: LIN ENGINEERING, LTD. Consulting Engineers Springfield, Illinois				STATE OF ILLINOIS DEPARTMENT OF TRANSPORTATION	SOUTH ABUTMENT – 2 STRUCTURE NO. 032–9906	F.A.I. RTE.	SECTION	COUNTY	TOTAL SHEETS	SHEET NO.
		DESIGNED - ZJH	REVISED			80	((32, 47-4)VB, HBR-3) BR, BRR	GRUNDY	143	96
		CHECKED - PRD MTH	REVISED					CONTRACT NO. 66295		
		DRAWN - BAE	REVISED							
	DATE - 03/25/22	CHECKED - ZJH MTH	REVISED		SHEET NO. 39 OF 49 SHEETS		ILLINOIS	FED. AID PROJECT		

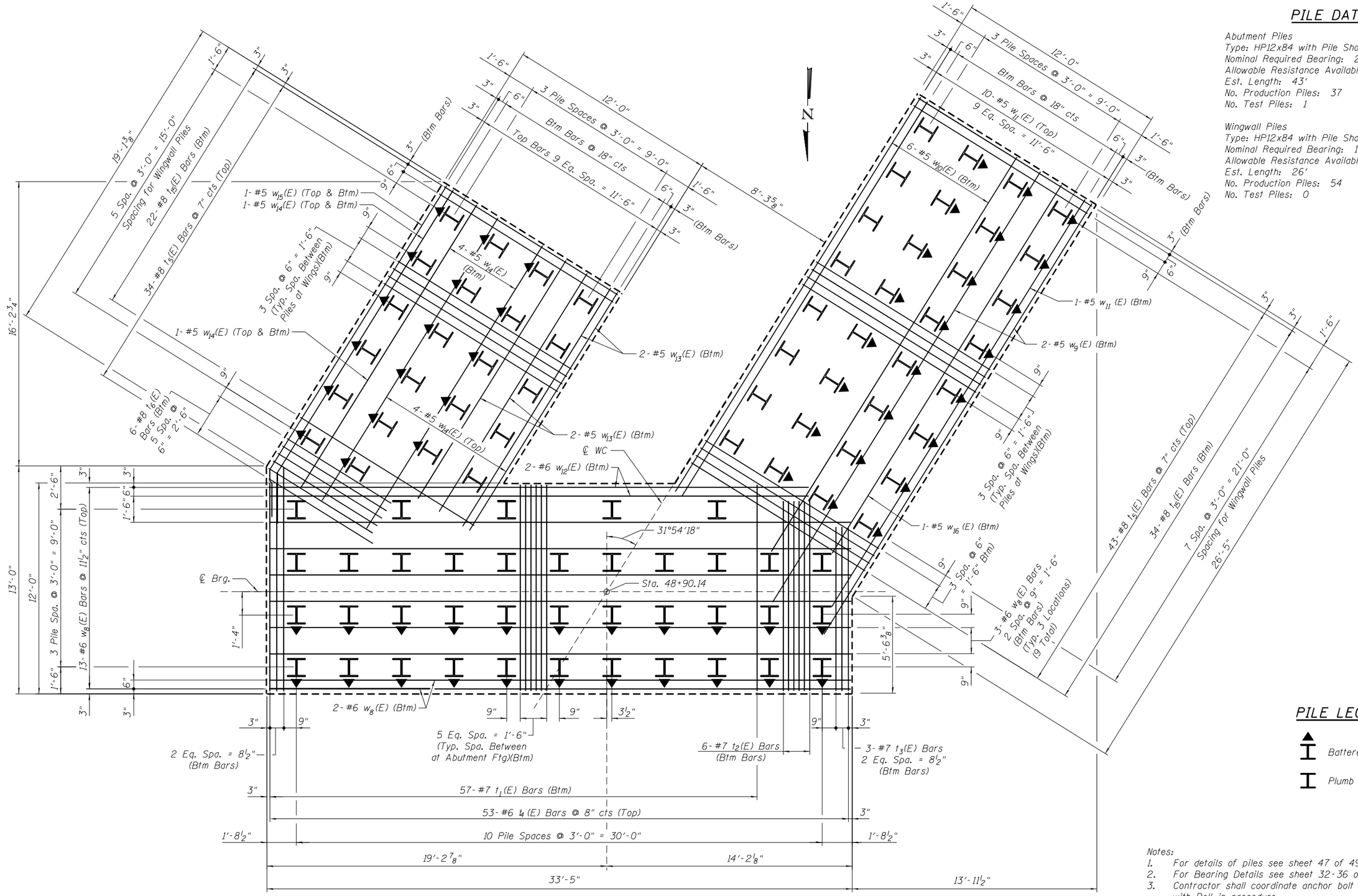

FOOTING PLAN

PILE DATA

Abutment Piles
Type: HP12x84 with Pile Shoes
Nominal Required Bearing: 252 kips
Allowable Resistance Available: 84 kips
Est. Length: 43'
No. Production Piles: 37
No. Test Piles: 1

Wingwall Piles
Type: HP12x84 with Pile Shoes
Nominal Required Bearing: 151 kips
Allowable Resistance Available: 50 kips
Est. Length: 26'
No. Production Piles: 54
No. Test Piles: 0

PILE LEGEND

Battered Pile

Plumb Pile

Notes:
1. For details of piles see sheet 47 of 49.
2. For Bearing Details see sheet 32-36 of 49.
3. Contractor shall coordinate anchor bolt installation with Roll-in procedure.
4. Battered Piles at 3"/12" in Direction Shown.

ORIGINAL: DLZ DLZ Illinois, Inc.
UPDATED: LIN ENGINEERING, LTD. Consulting Engineers Springfield, Illinois

DATE - 03/25/22	DESIGNED - ZJH	REVISED
	CHECKED - PRD MTH	REVISED
	DRAWN - BAE	REVISED
	CHECKED - ZJH MTH	REVISED

STATE OF ILLINOIS
DEPARTMENT OF TRANSPORTATION

SOUTH ABUTMENT-3
STRUCTURE NO. 032-9906

SHEET NO. 40 OF 49 SHEETS

F.A.I. RTE.	SECTION	COUNTY	TOTAL SHEETS	SHEET NO.
80	((32, 47-4)VB, HBR-3) BR, BRR	GRUNDY	143	97
		CONTRACT NO. 66295		
	ILLINOIS	FED. AID PROJECT		

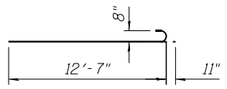

BAR n_1(E)

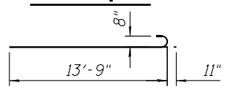

BAR n_2(E)

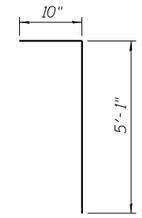

BAR v_{26}(E)

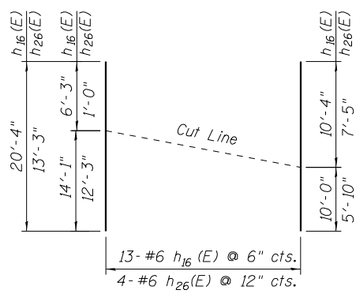

FIELD CUTTING DIAGRAM

Order bars full length. Cut bars in field as shown. Use remaining bars in opposite half.

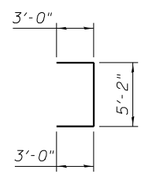

BAR u_1(E)

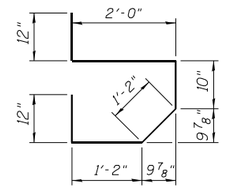

BAR u_2(E)

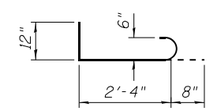

BAR u_3(E)

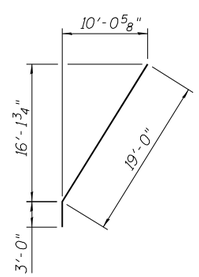

BAR w_{15}(E)

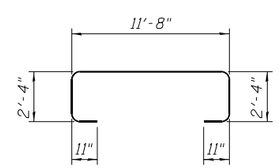

BAR t_{15}(E)

S. ABUTMENT BILL OF MATERIAL

Bar	No.	Size	Length	Shape
h_7(E)	34	#5	33'-1"	
h_8(E)	1	#5	11'-6"	
h_9(E)	1	#5	11'-0"	
h_{10}(E)	1	#5	3'-9"	
h_{11}(E)	1	#5	3'-3"	
h_{12}(E)	1	#5	2'-11"	
h_{13}(E)	1	#5	2'-6"	
h_{14}(E)	34	#5	20'-6"	
h_{15}(E)	18	#5	19'-7"	
h_{16}(E)	13	#6	20'-4"	
h_{17}(E)	7	#6	12'-8"	
h_{18}(E)	1	#6	14'-11"	
h_{26}(E)	4	#6	13'-3"	
h_{27}(E)	1	#5	11'-9"	
h_{28}(E)	1	#5	12'-3"	
h_{29}(E)	18	#5	21'-5"	
n_1(E)	50	#8	13'-6"	
n_2(E)	99	#8	14'-8"	
v_4(E)	13	#5	8'-6"	
v_5(E)	42	#5	6'-4"	
v_6(E)	1	#5	7'-1"	
v_7(E)	1	#5	7'-7"	
v_8(E)	34	#5	10'-9"	
v_9(E)	42	#5	16'-6"	
v_{10}(E)	50	#6	9'-5"	
v_{12}(E)	16	#5	1'-10"	
v_{13}(E)	8	#5	1'-0"	
v_{24}(E)	27	#7	10'-4"	
v_{26}(E)	42	#5	5'-11"	
t_1(E)	57	#7	11'-8"	
t_2(E)	6	#7	10'-10"	
t_3(E)	3	#7	9'-3"	
t_4(E)	53	#6	11'-8"	
t_5(E)	77	#8	11'-8"	
t_6(E)	6	#8	7'-0"	
t_{15}(E)	56	#8	18'-2"	

Bar	No.	Size	Length	Shape
w_8(E)	24	#6	33'-1"	
w_9(E)	2	#5	29'-0"	
w_{10}(E)	6	#5	26'-6"	
w_{11}(E)	11	#5	27'-5"	
w_{12}(E)	2	#6	30'-9"	
w_{13}(E)	4	#5	16'-0"	
w_{14}(E)	12	#5	21'-7"	
w_{15}(E)	2	#5	22'-0"	
w_{16}(E)	1	#5	24'-9"	
u_1(E)	56	#5	11'-2"	
u_2(E)	26	#6	7'-2"	
u_3(E)	26	#6	4'-0"	
Structure Excavation			Cu. Yd.	800.0
Concrete Structures			Cu. Yd.	215.0
Reinforcement Bars, Epoxy Coated			Pound	23,250
Furnishing Steel Piles HP12x84			Foot	2,995
Driving Piles			Foot	2,995
Test Pile Steel HP12x84			Each	1
Pile Shoes			Each	92
Concrete Sealer			Sq. Ft.	285

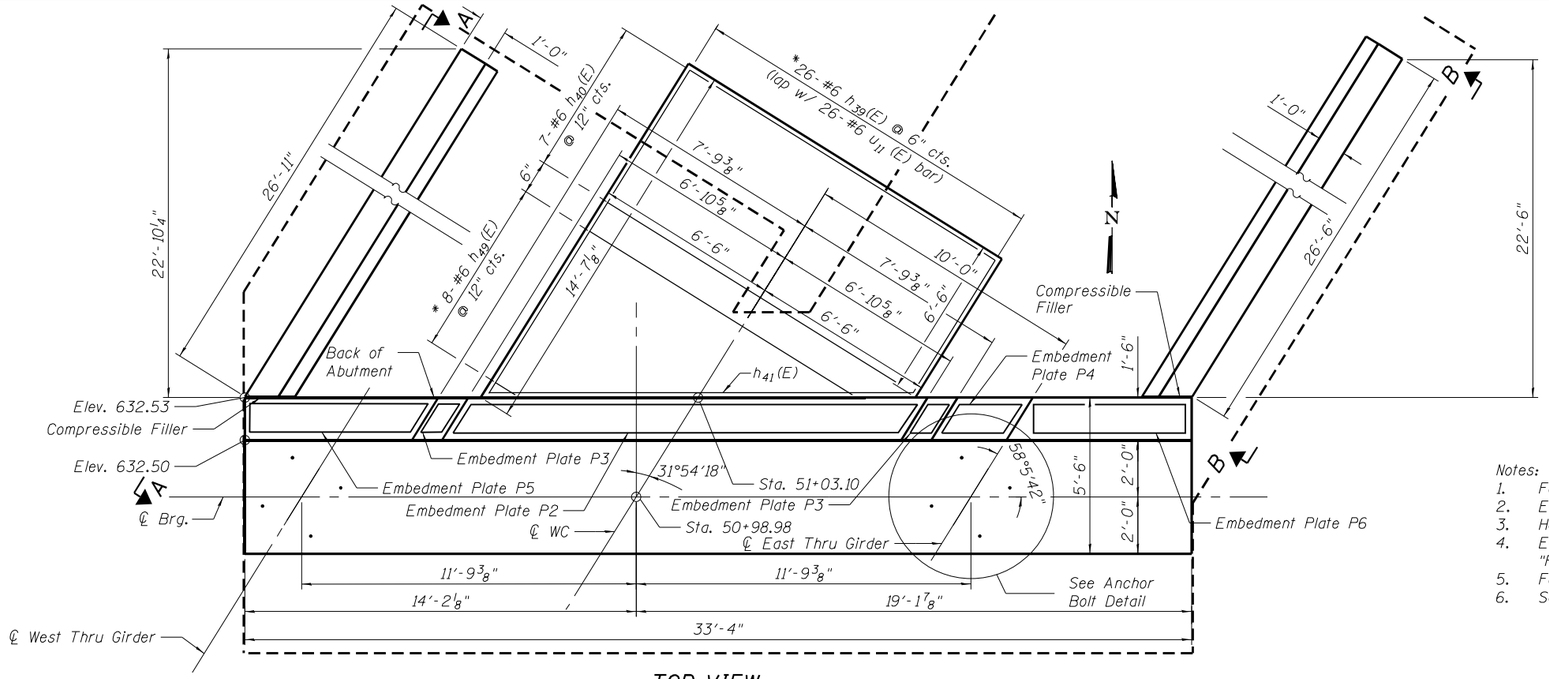

TOP VIEW

*See Cutting Diagram on Sheet 45 of 49.
*#5 = 2'-7"
#7 = 4'-5"

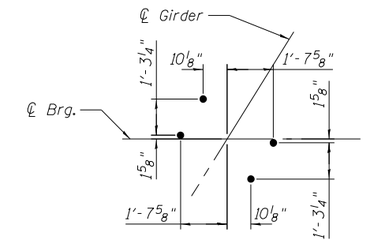

ANCHOR BOLT DETAIL

Notes:
1. For notes see sheet 43 of 49.
2. Embed. Plates Shall Conform to AASHTO M270, Grade 50.
3. Headed Studs Shall Conform to AASHTO M169, Grade 1015.
4. Embed. Plates with Studs are Paid for as Part of "Furnishing and Erecting Structural Steel".
5. For Embed. Plate Details See Sheet 43 of 49.
6. See Sheet 26 of 49 for Section M-M.

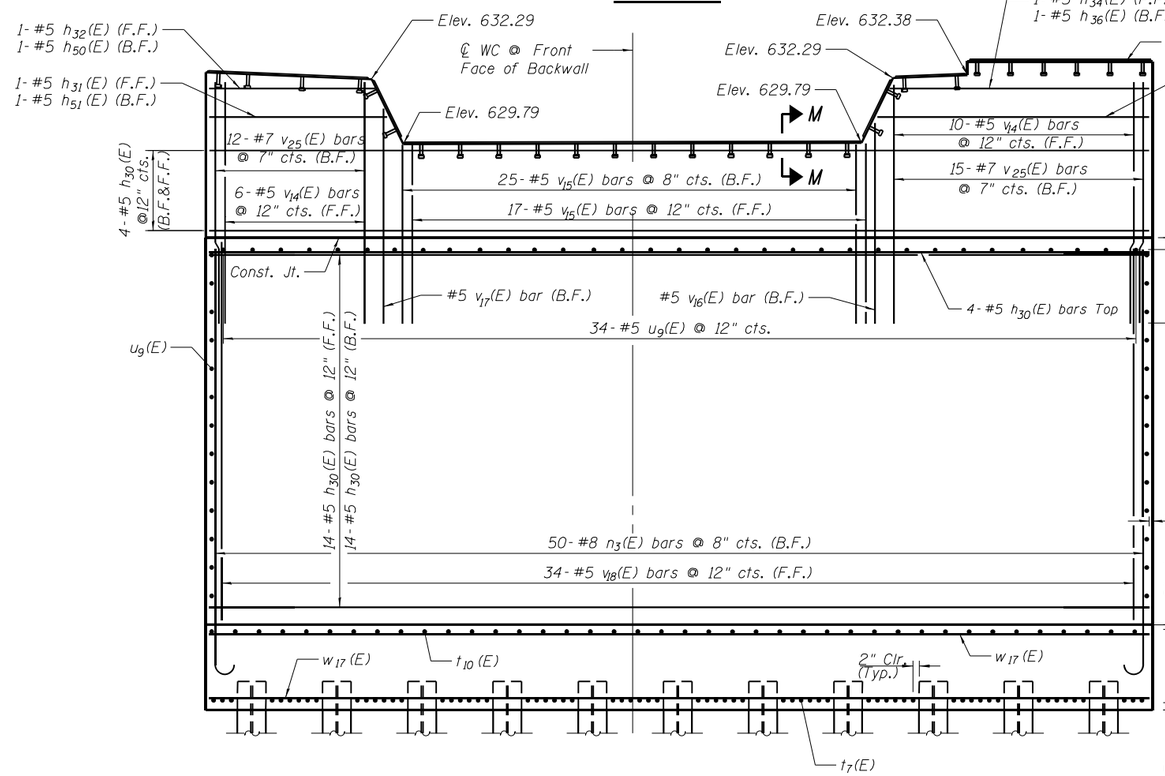

ELEVATION

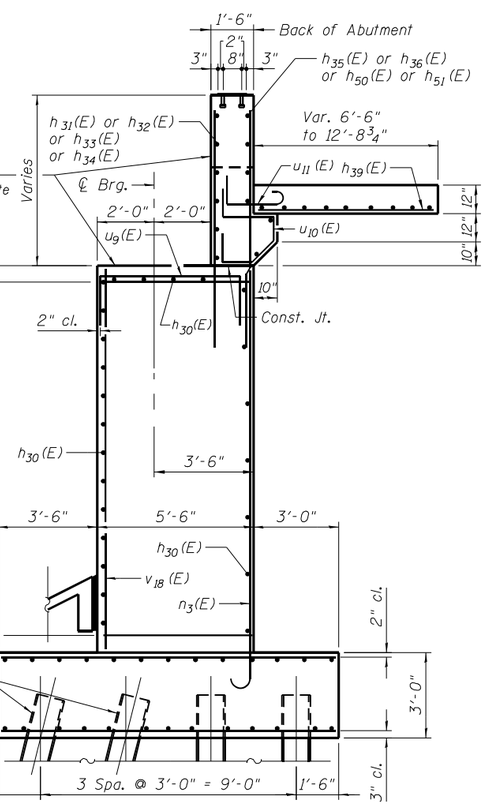

END VIEW

ORIGINAL:	UPDATED:							
DLZ Illinois, Inc.	LIN ENGINEERING LTD. Consulting Engineers Springfield, Illinois		DESIGNED - ZJH	REVISED	STATE OF ILLINOIS DEPARTMENT OF TRANSPORTATION	NORTH ABUTMENT – 1 STRUCTURE NO. 032–9906	F.A.I. RTE.	SECTION	COUNTY	TOTAL SHEETS	SHEET NO.
			CHECKED - PRD MTH	REVISED			80	(32, 47-4)VB, HBR-3) BR, BRR	GRUNDY	143	99
			DRAWN - BAE	REVISED					CONTRACT NO. 66295		
		DATE - 03/25/22	CHECKED - ZJH MTH	REVISED		SHEET NO. 42 OF 49 SHEETS		ILLINOIS	FED. AID PROJECT		

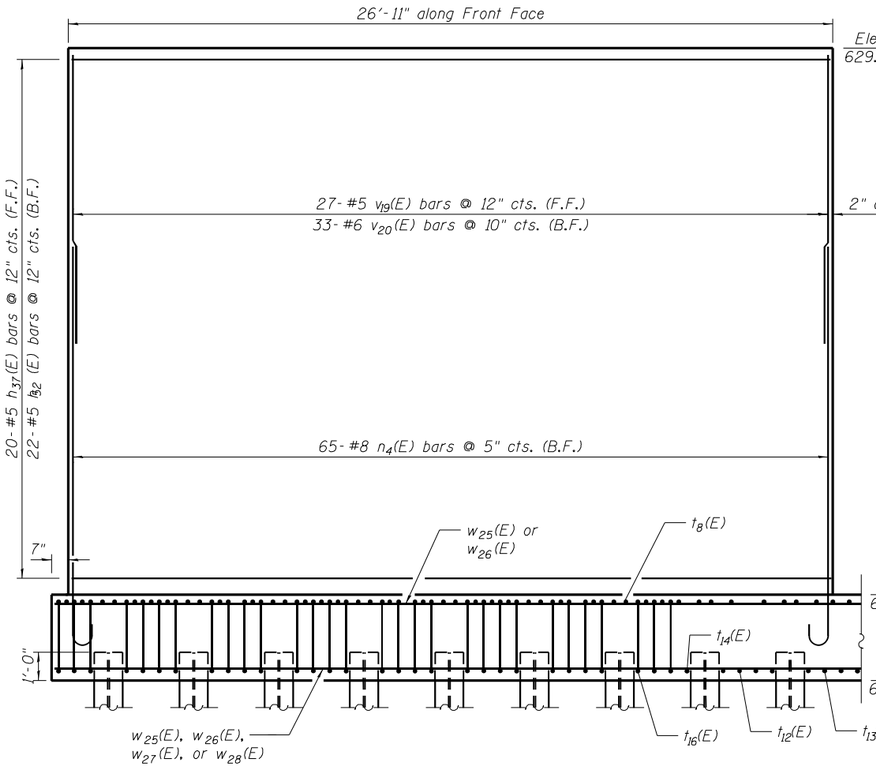

SECTION A-A

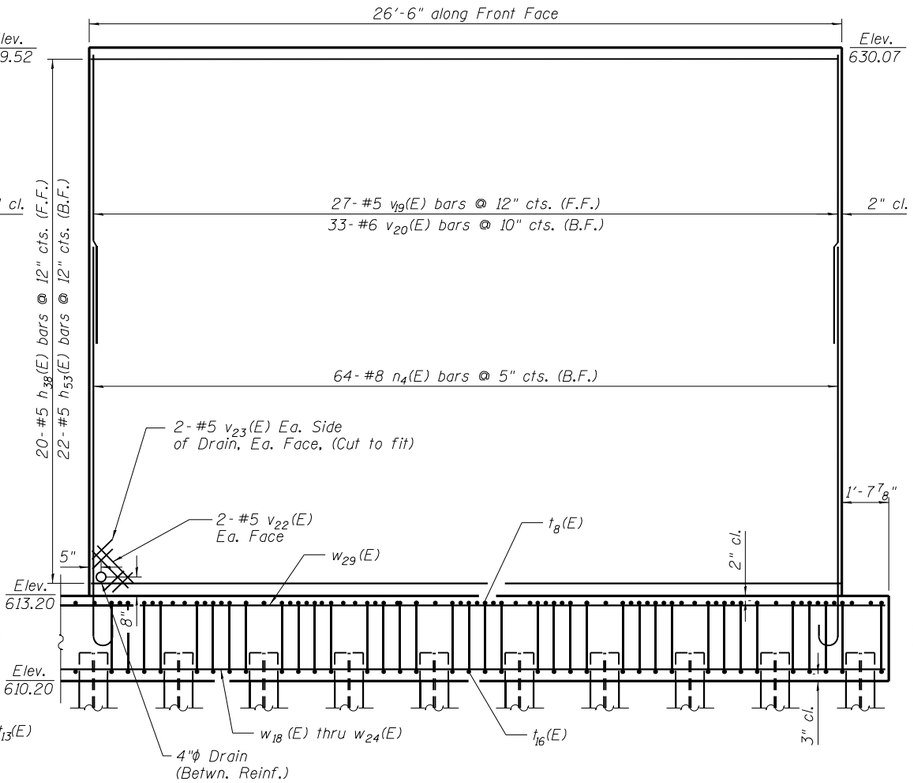

Note:
Cut n_4, v_{20}, h_{35}, or h_{38} as required to clear drains.

SECTION B-B

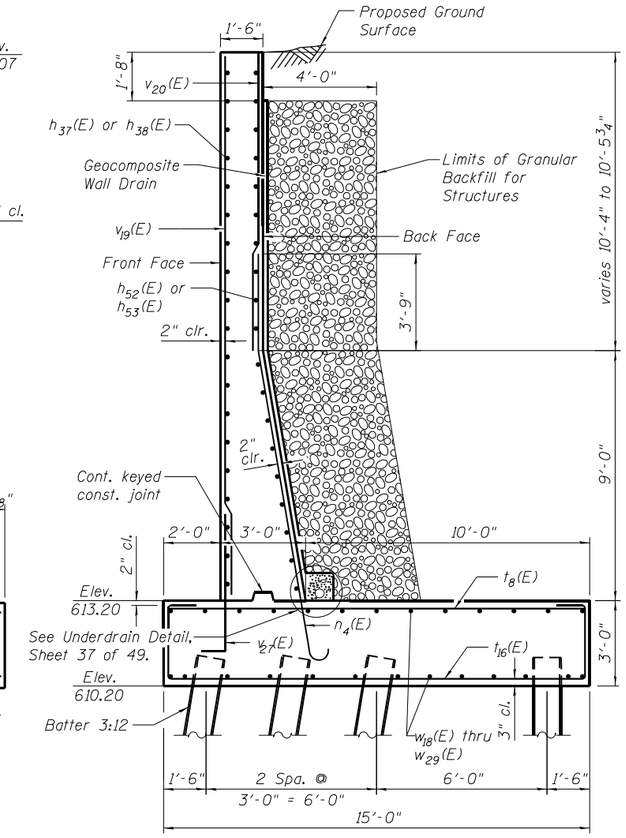

SECTION THRU WINGWALLS

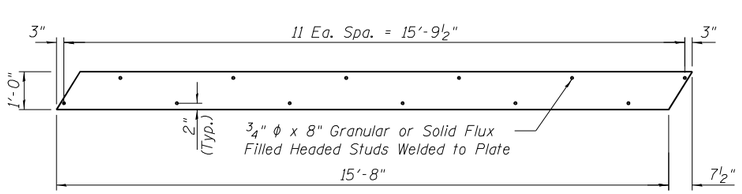

PLATE P2

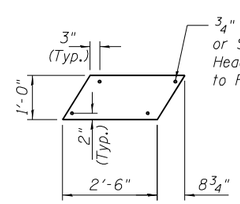

PLATE P3

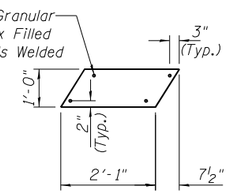

PLATE P4

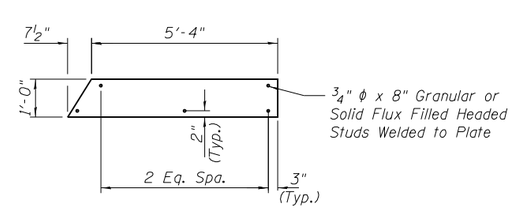

PLATE P5

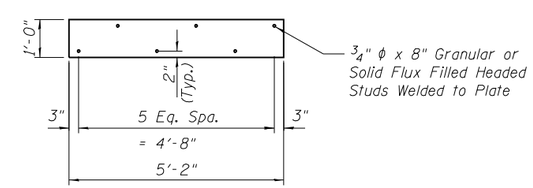

PLATE P6

EMBEDMENT PLATE DETAILS

Notes:
For details of piles see sheet 47 of 49.
For Bearing Details see Sheet 32-36 of 49.
Contractor to coordinate anchor bolt installation with Roll-In procedure.

ORIGINAL: DLZ DLZ Illinois, Inc.	UPDATED: LIN ENGINEERING, LTD. Consulting Engineers Springfield, Illinois								
		DESIGNED - ZJH	REVISED	STATE OF ILLINOIS DEPARTMENT OF TRANSPORTATION	NORTH ABUTMENT – 2 STRUCTURE NO. 032–9906	F.A.I. RTE.	SECTION	COUNTY	TOTAL SHEETS / SHEET NO.
		CHECKED - PRD MTH	REVISED			80	((32, 47-4)VB, HBR-3) BR, BRR	GRUNDY	143 / 100
		DRAWN - BAE	REVISED					CONTRACT NO. 66295	
	DATE - 03/25/22	CHECKED - ZJH MTH	REVISED		SHEET NO. 43 OF 49 SHEETS		ILLINOIS	FED. AID PROJECT	

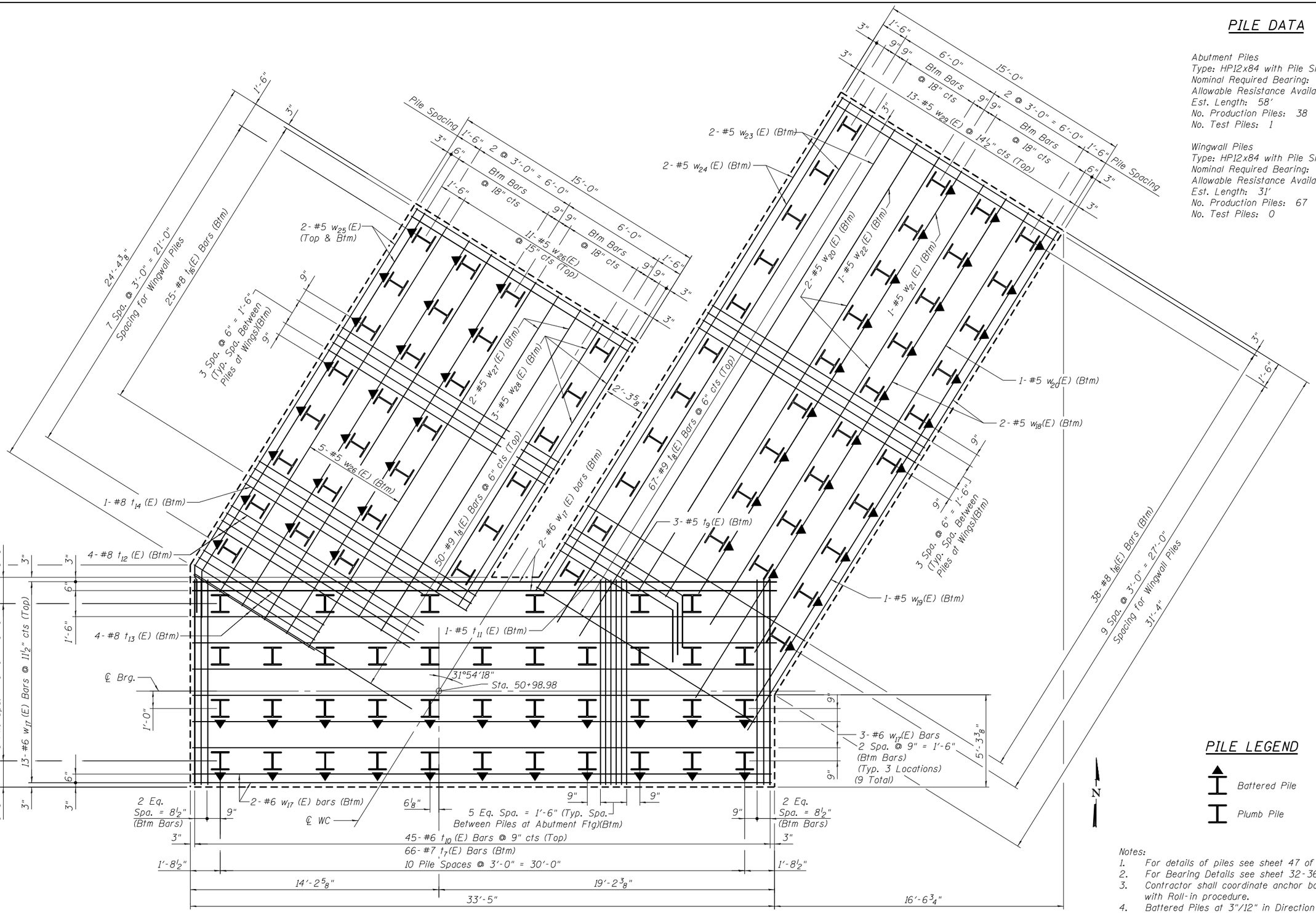

FOOTING PLAN

PILE DATA

Abutment Piles
Type: HP12x84 with Pile Shoes
Nominal Required Bearing: 295 kips
Allowable Resistance Available: 98 kips
Est. Length: 58'
No. Production Piles: 38
No. Test Piles: 1

Wingwall Piles
Type: HP12x84 with Pile Shoes
Nominal Required Bearing: 144 kips
Allowable Resistance Available: 48 kips
Est. Length: 31'
No. Production Piles: 67
No. Test Piles: 0

PILE LEGEND

Battered Pile

Plumb Pile

Notes:
1. For details of piles see sheet 47 of 49.
2. For Bearing Details see sheet 32-36 of 49.
3. Contractor shall coordinate anchor bolt installation with Roll-in procedure.
4. Battered Piles at 3"/12" in Direction Shown.

ORIGINAL: DLZ DLZ Illinois, Inc.
UPDATED: LIN ENGINEERING LTD. Consulting Engineers Springfield, Illinois

	DESIGNED - ZJH	REVISED
	CHECKED - PRD MTH	REVISED
	DRAWN - BAE	REVISED
DATE - 03/25/22	CHECKED - ZJH MTH	REVISED

STATE OF ILLINOIS
DEPARTMENT OF TRANSPORTATION

NORTH ABUTMENT-3
STRUCTURE NO. 032-9906

SHEET NO. 44 OF 49 SHEETS

F.A.I. RTE.	SECTION	COUNTY	TOTAL SHEETS	SHEET NO.
80	((32, 47-4)VB, HBR-3) BR, BRR	GRUNDY	143	101
		CONTRACT NO. 66295		
	ILLINOIS	FED. AID PROJECT		

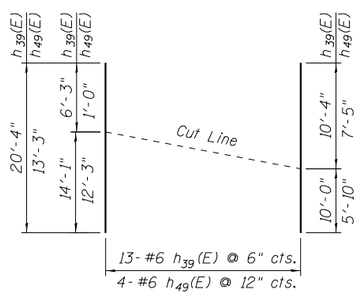

FIELD CUTTING DIAGRAM

Order bars full length. Cut bars in field as shown. Use remaining bars in opposite half.

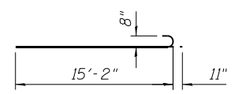

BAR n_3(E)

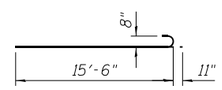

BAR n_4(E)

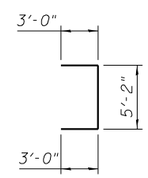

BAR u_9(E)

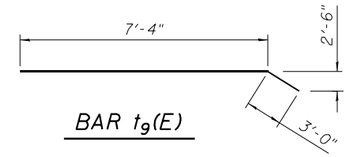

BAR t_9(E)

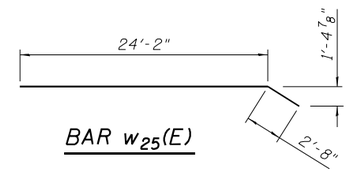

BAR w_{25}(E)

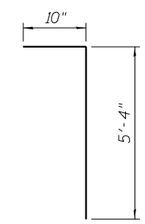

BAR v_{27}(E)

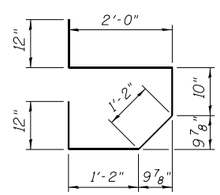

BAR u_{10}(E)

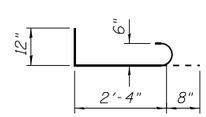

BAR u_{11}(E)

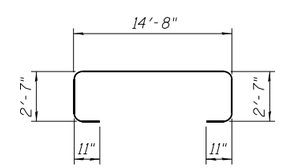

BAR t_{16}(E)

N. ABUTMENT BILL OF MATERIAL

Bar	No.	Size	Length	Shape
h_{30}(E)	40	#5	33'-1"	
h_{31}(E)	1	#5	6'-0"	
h_{32}(E)	1	#5	5'-6"	
h_{33}(E)	1	#5	9'-3"	
h_{34}(E)	1	#5	8'-10"	
h_{35}(E)	1	#5	8'-5"	
h_{36}(E)	1	#5	8'-0"	
h_{37}(E)	20	#5	26'-8"	
h_{38}(E)	20	#5	26'-3"	
h_{39}(E)	13	#6	20'-4"	
h_{40}(E)	7	#6	12'-8"	
h_{41}(E)	1	#6	14'-11"	
h_{49}(E)	4	#6	13'-3"	
h_{50}(E)	1	#5	6'-3"	
h_{51}(E)	1	#5	6'-9"	
h_{52}(E)	22	#5	25'-8"	
h_{53}(E)	22	#5	27'-2"	
n_3(E)	50	#8	16'-1"	
n_4(E)	129	#8	16'-5"	
v_{14}(E)	16	#5	8'-6"	
v_{15}(E)	42	#5	6'-4"	
v_{16}(E)	1	#5	7'-1"	
v_{17}(E)	1	#5	7'-7"	
v_{18}(E)	9	#5	13'-2"	
v_{19}(E)	16	#5	19'-0"	
v_{20}(E)	66	#6	10'-4"	
v_{22}(E)	4	#5	1'-10"	
v_{23}(E)	8	#5	1'-0"	
v_{25}(E)	27	#7	10'-4"	
v_{27}(E)	54	#5	6'-2"	
t_7(E)	66	#7	11'-9"	
t_8(E)	117	#9	14'-8"	
t_9(E)	3	#5	10'-4"	
t_{10}(E)	45	#6	11'-9"	
t_{11}(E)	1	#5	4'-9"	
t_{12}(E)	4	#8	13'-0"	
t_{13}(E)	4	#8	8'-2"	
t_{14}(E)	1	#8	12'-0"	
t_{16}(E)	63	#8	21'-8"	

Bar	No.	Size	Length	Shape
w_{17}(E)	26	#6	33'-1"	
w_{18}(E)	2	#5	33'-8"	
w_{19}(E)	1	#5	32'-0"	
w_{20}(E)	3	#5	29'-8"	
w_{21}(E)	1	#5	28'-6"	
w_{22}(E)	1	#5	30'-3"	
w_{23}(E)	2	#5	34'-2"	
w_{24}(E)	2	#5	33'-3"	
w_{25}(E)	4	#5	26'-10"	
w_{26}(E)	16	#5	24'-8"	
w_{27}(E)	2	#5	21'-8"	
w_{28}(E)	3	#5	18'-2"	
w_{29}(E)	13	#5	35'-0"	
u_9(E)	62	#5	11'-2"	
u_{10}(E)	26	#6	7'-2"	
u_{11}(E)	26	#6	4'-0"	
Structure Excavation			Cu. Yd.	1,210
Concrete Structures			Cu. Yd.	277.9
Reinforcement Bars, Epoxy Coated			Pound	31,530
Furnishing Steel Piles HP12x84			Foot	4,281
Driving Piles			Foot	4,281
Test Pile Steel HP12x84			Each	1
Pile Shoes			Each	106
Concrete Sealer			Sq. Ft.	284

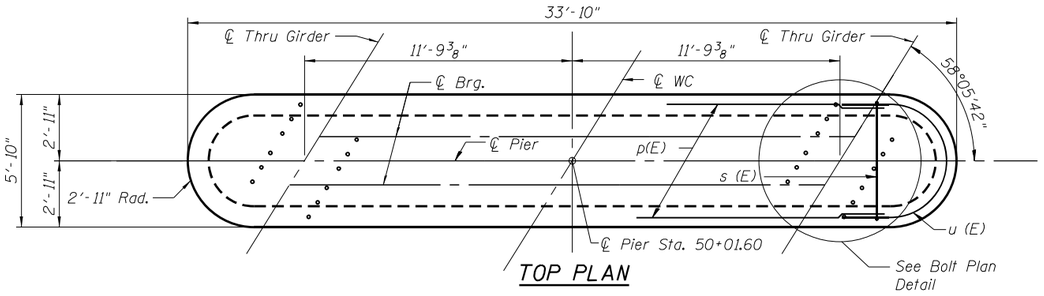

TOP PLAN

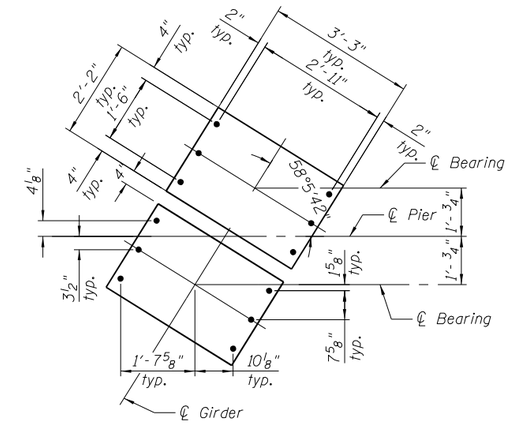

BOLT PLAN DETAIL

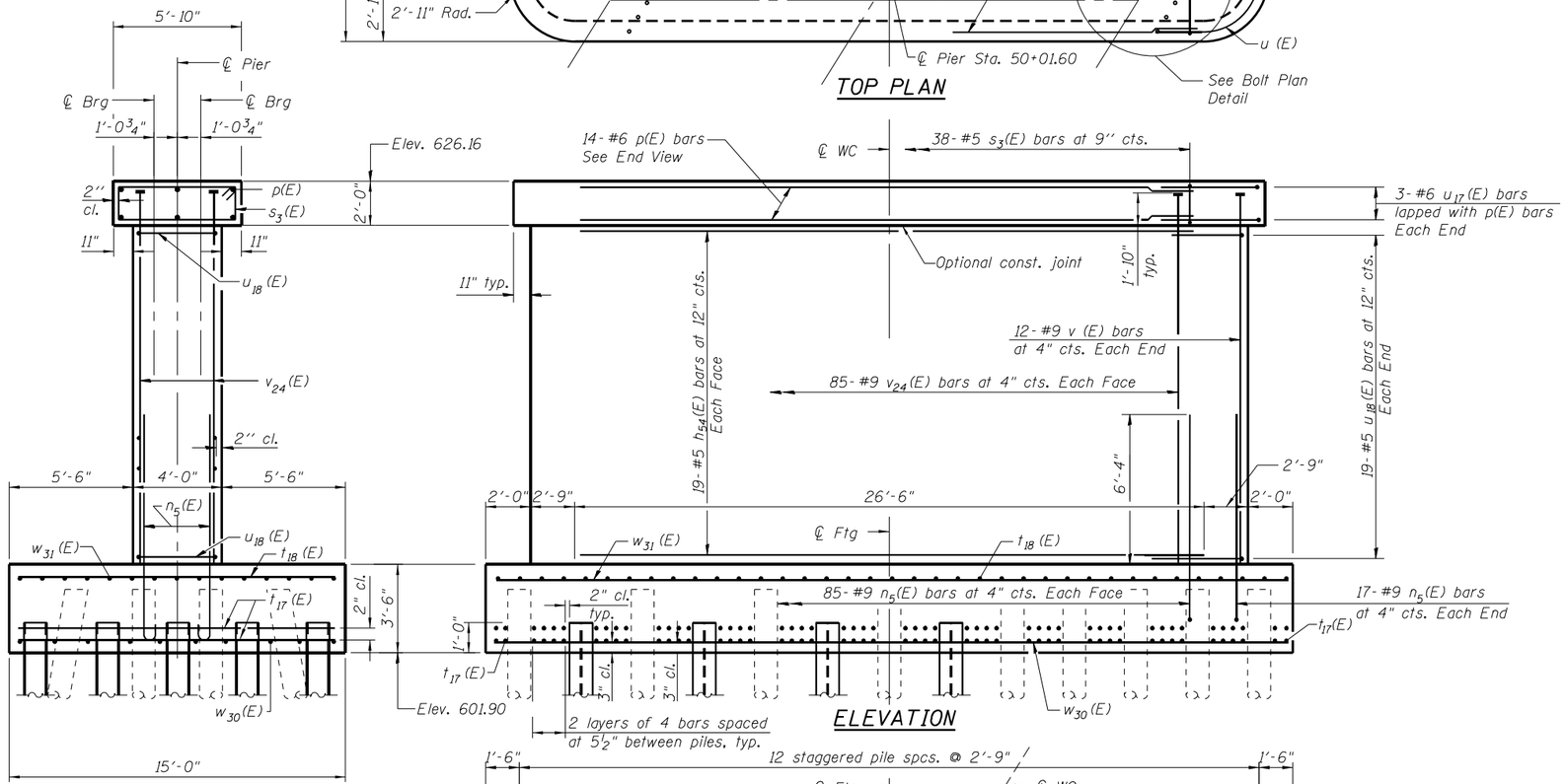

END VIEW

ELEVATION

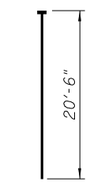

BAR v_{24}(E)
(Headed)

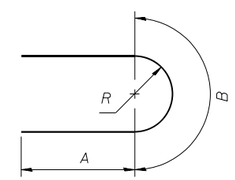

BAR u_{17}(E) & u_{18}(E)

Bar	A	B	R
u_{17}(E)	3'-6"	8'-8"	2'-9"
u_{18}(E)	3'-6"	5'-9"	1'-10"

BILL OF MATERIAL

Bar	No.	Size	Length	Shape
h_{54}(E)	38	#5	28'-0"	
n_5(E)	204	#9	10'-3"	
p(E)	14	#6	28'-0"	
s_3(E)	29	#5	15'-3"	
t_{17} (E)	104	#9	14'-8"	
t_{18} (E)	37	#5	14'-8"	
u_{17} (E)	6	#6	15'-8"	
u_{18} (E)	38	#5	12'-9"	
v_{24} (E)	204	#9	20'-6"	
w_{30} (E)	10	#6	35'-8"	
w_{31} (E)	15	#5	35'-8"	
Structure Excavation			Cu. Yd.	118.0
Concrete Structures			Cu. Yd.	170.3
Reinforcement Bars, Epoxy Coated			Pound	30,990
Furnishing Steel Piles HP12x84			Foot	920
Driving Piles			Foot	920
Test Pile Steel HP12x84			Each	1
Pile Shoes			Each	21
Concrete Sealer			Sq. Ft.	1,370

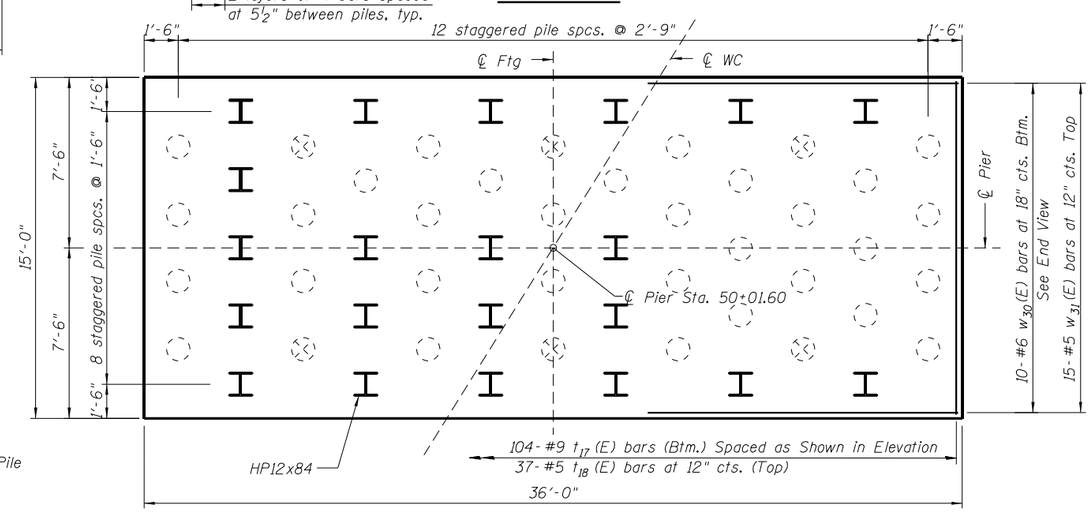

FOOTING PLAN

PILE KEY

- Exist Bat Pile
- Exist Vertical Pile
- New Pile

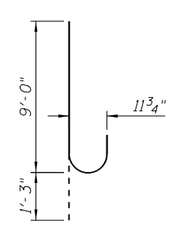

BAR n_5(E)

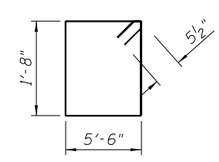

BAR s_3(E)

PILE DATA

Type: HP12x84 with Pile Shoes
Nominal Required Bearing: 262 Kips
Allowable Resistance Available: 87 Kips
Est. Length: 46 Ft
No. Production Piles: 20
No. Test Piles: 1

Notes:
Space reinforcement in cap to miss anchor bolts.
Coordinate anchor bolt installation with roll-in track.
For details of HP piles, see sheet 47 of 49.
Contractor is responsible for maintaining existing pile integrety.

ORIGINAL: DLZ Illinois, Inc.
UPDATED: LIN ENGINEERING, LTD. Consulting Engineers Springfield, Illinois

DESIGNED - ZJH	REVISED	
CHECKED - PRD MTH	REVISED	
DRAWN - BAE	REVISED	
DATE - 03/25/22	CHECKED - ZJH MTH	REVISED

STATE OF ILLINOIS
DEPARTMENT OF TRANSPORTATION

PIER
STRUCTURE NO. 032-9906

SHEET NO. 46 OF 49 SHEETS

F.A.I. RTE.	SECTION	COUNTY	TOTAL SHEETS	SHEET NO.
80	((32, 47-4)VB, HBR-3) BR, BRR	GRUNDY	143	103
		CONTRACT NO. 66295		
		ILLINOIS FED. AID PROJECT		

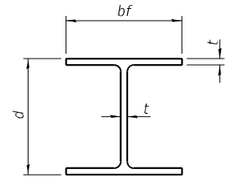

STEEL PILE TABLE

Designation	Depth d	Flange width bf	Web and Flange thickness t	Encasement diameter A
HP 14x117	14¼"	14⅞"	13/16"	30"
x102	14"	14¾"	11/16"	30"
x89	13⅞"	14¾"	⅝"	30"
x73	13⅝"	14⅝"	½"	30"
HP 12x84	12¼"	12¼"	11/16"	24"
x74	12⅛"	12¼"	⅝"	24"
x63	12"	12⅛"	½"	24"
x53	11¾"	12"	7/16"	24"
HP 10x57	10"	10¼"	9/16"	24"
x42	9¾"	10⅛"	7/16"	24"
HP 8x36	8"	8⅛"	7/16"	18"

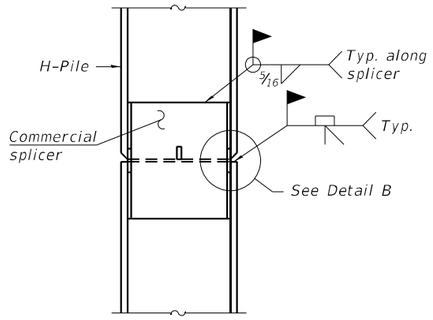

ELEVATION

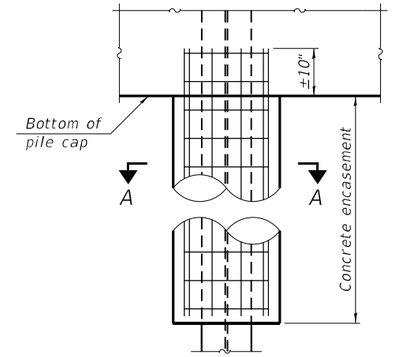

ELEVATION

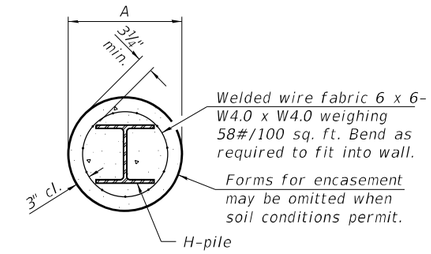

SECTION A-A

INDIVIDUAL PILE CONCRETE ENCASEMENT

(when specified)

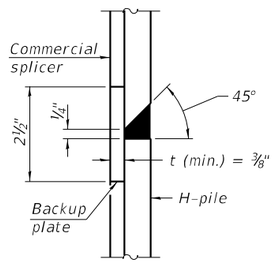

DETAIL "B"

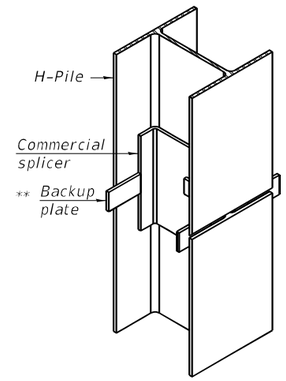

ISOMETRIC VIEW

WELDED COMMERCIAL SPLICE

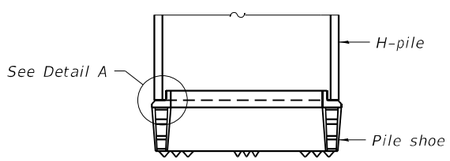

ELEVATION

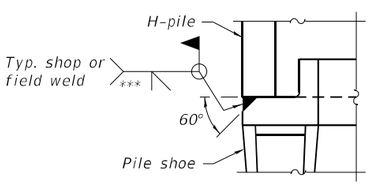

DETAIL A

SHOE ATTACHMENT

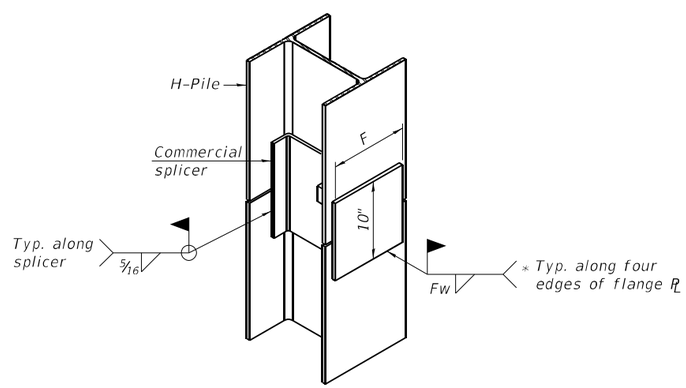

ISOMETRIC VIEW

WELDED COMMERCIAL SPLICE ALTERNATE

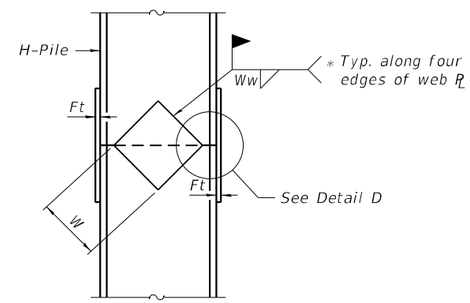

ELEVATION

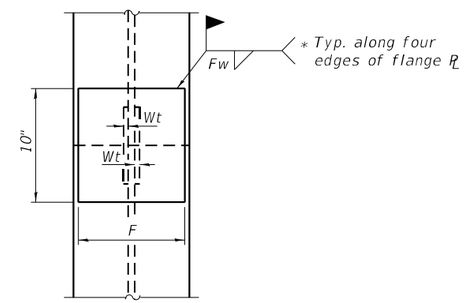

END VIEW

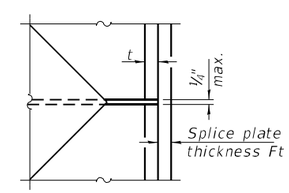

DETAIL D

Designation	F	Ft	Fw	W	Wt	Ww
HP 14x117	12½"	1"	⅞"	7¾"	⅝"	½"
x102	12½"	⅞"	¾"	7¾"	⅝"	½"
x89	12½"	¾"	11/16"	7¾"	⅝"	½"
x73	12½"	⅝"	9/16"	7¾"	⅝"	½"
HP 12x84	10"	⅞"	11/16"	6½"	⅝"	½"
x74	10"	⅞"	11/16"	6½"	⅝"	½"
x63	10"	⅝"	½"	6½"	½"	⅜"
x53	10"	⅝"	½"	6½"	½"	⅜"
HP 10x57	8"	¾"	9/16"	5¼"	½"	⅜"
x42	8"	⅝"	9/16"	5¼"	½"	⅜"
HP 8x36	7"	⅝"	7/16"	4¼"	½"	⅜"

WELDED PLATE FIELD SPLICE

Note:
The steel H-piles shall be according to AASHTO M270 Grade 50.

* Interrupt welds ¼" from end of web and/or each flange.

** Remove portions of backup plates that extend outside the flanges.

*** Weld size per pile shoe manufacturer (5/16" min.).

F-HP 1-1-2020

Illinois Department of Transportation
Division of Highways
District Nine Materials

SOIL BORING LOG

Page 1 of 2

Date 62402

ROUTE FAI 80 (I-80) DESCRIPTION E.J & E Railroad over I-80 LOGGED BY Larry Myers

SECTION (32,47-4)K, BR-8, BR-9 LOCATION NW 14, SEC. 1, TWP. 34N, RNG. 8E, 3rd PM

COUNTY GRUNDY DRILLING METHOD Hollow Steam Auger HAMMER TYPE CME Automatic

STRUCT. NO. 032-9901 EXISTING
Station 50+01.60

BORING NO. #1:S Abut, SE Quad
Station 49+21.6
Offset 12.50ft Rt
Ground Surface Elev. 628.55 ft

Surface Water Elev. ____ ft
Stream Bed Elev. ____ ft

Groundwater Elev.:
First Encounter ____ ft
Upon Completion ____ ft
After ____ Hrs. ____ ft

Description	Elev.	DEPTH (ft)	BLOWS (6")	UCS Qu (tsf)	MOIST (%)
Augered tan, ballast Stone and brown, Sand					
	626.05				
Medium, brown, medium to coarse-grained, Sand and Gravel-fill			4		
			4		2.8
			7		
		-5			
			10		
			9		5.4
			14		
	619.05				
Medium, brown, medium to coarse-grained, Sand and Gravel-fill		-10	5		
			3		1.3
			3		
			2		
			1		5.6
			3		
		-15			
	613.05		1		
Medium, brown, Silty Clay Loam			2	1.0	11.5
	611.05		3	B	
Medium, brown, Silty Clay Loam Till			2		
			2	1.0	16.5
			3	P	
	609.05				
Very Stiff, gray, Silty Clay Loam Till		-20			

Description	Elev.	DEPTH (ft)	BLOWS (6")	UCS Qu (tsf)	MOIST (%)
Very Stiff, gray, Silty Clay Loam Till (continued)			2		
			4	2.5	16.3
			5	B	
			3		
			4	2.1	17.2
			6	B	
		-25			
			2		
			4	2.5	18.0
			4	B	
	601.55				
Stiff, gray, Silty Clay Loam Till			2		
			2	1.9	16.1
			4	B	
		-30			
			2		
			3	1.4	17.6
			5	B	
			2		
			3	1.6	17.4
			6	B	
	594.05				
Very stiff, gray, Silty Clay Loam Till		-35			
			2		
			3	2.1	13.3
			6	B	
		-40			

The Unconfined Compressive Strength (UCS) Failure Mode is indicated by (B-Bulge, S-Shear, P-Penetrometer)
The SPT (N value) is the sum of the last two blow values in each sampling zone (AASHTO T206)

Illinois Department of Transportation
Division of Highways
District Nine Materials

SOIL BORING LOG

Page 2 of 2

Date 62402

ROUTE FAI 80 (I-80) DESCRIPTION E.J & E Railroad over I-80 LOGGED BY Larry Myers

SECTION (32,47-4)K, BR-8, BR-9 LOCATION NW 14, SEC. 1, TWP. 34N, RNG. 8E, 3rd PM

COUNTY GRUNDY DRILLING METHOD Hollow Steam Auger HAMMER TYPE CME Automatic

STRUCT. NO. 032-9901 EXISTING
Station 50+01.60

BORING NO. #1:S Abut, SE Quad
Station 49+21.6
Offset 12.50ft Rt
Ground Surface Elev. 628.55 ft

Surface Water Elev. ____ ft
Stream Bed Elev. ____ ft

Groundwater Elev.:
First Encounter ____ ft
Upon Completion ____ ft
After ____ Hrs. ____ ft

Description	Elev.	DEPTH (ft)	BLOWS (6")	UCS Qu (tsf)	MOIST (%)
Very Stiff, gray, Silty Clay Loam Till (continued)			2		
			3	2.2	16.7
			6	B	
		-45	4		
			5	2.2	16.5
			7	B	
		-50	5		
			6	2.0	17.0
			7	P	
	575.55				
Stiff, gray, Silty Clay Loam Till		-55			
			3		
			5	1.6	16.4
			7	B	
		-60			

Description	Elev.	DEPTH (ft)	BLOWS (6")	UCS Qu (tsf)	MOIST (%)
Stiff, gray, Silty Clay Loam Till (continued)			5		
			6	1.6	17.9
			8	B	
	619.05				
Very stiff, gray, Clay with thin Silt layers at 76'- lake type clay deposit					
		-65			
			4		
			6	3.3	23.8
			9	B	
		-70	4		
			6	2.9	21.6
			10	B	
		-75			
			5		
			7	3.1	22.5
			11	B	
	562.05				
End of Boring					
		-80			

The Unconfined Compressive Strength (UCS) Failure Mode is indicated by (B-Bulge, S-Shear, P-Penetrometer)
The SPT (N value) is the sum of the last two blow values in each sampling zone (AASHTO T206)

Illinois Department of Transportation
Division of Highways
District Nine Materials

SOIL BORING LOG

Page 1 of 2

Date 62502

ROUTE FAI 80 (I-80) DESCRIPTION E.J & E Railroad over I-80 LOGGED BY Larry Myers

SECTION (32,47-4)K, BR-8, BR-9 LOCATION NW 14, SEC. 1, TWP. 34N, RNG. 8E, 3rd PM

COUNTY GRUNDY DRILLING METHOD Hollow Steam Auger HAMMER TYPE CME Automatic

STRUCT. NO. 032-9901 EXISTING
Station 50+01.60

BORING NO. #2:N Abut, NW Quad
Station 50+81.6
Offset 13.00ft Lt
Ground Surface Elev. 629.66 ft

Surface Water Elev. ____ ft
Stream Bed Elev. ____ ft

Groundwater Elev.:
First Encounter 562.7 ft
Upon Completion ____ ft
After ____ Hrs. ____ ft

Description	Elev.	DEPTH (ft)	BLOWS (6")	UCS Qu (tsf)	MOIST (%)
Augered, Brown, Sand and Gravel					
	627.16				
Medium, brown, medium to coarse-grained, Sand and Gravel-fill			7		
			6		2.8
			6		
		-5			
			6		
			6		4.0
			6		
			6		
			7		4.4
			9		
	620.16				
Loose, brown, medium to coarse-grained, Sand and Gravel-fill		-10	6		
			3		4.0
			4		
			2		
			4		3.7
			5		
	615.16				
Medium, brown, medium to coarse-grained, Sand and Gravel-fill		-15	6		
			6		4.2
			6		
	612.66				
Very Loose, brown, medium to coarse-grained, Sand and Gravel-fill			3		
			2		7.0
			1		
		-20			

Description	Elev.	DEPTH (ft)	BLOWS (6")	UCS Qu (tsf)	MOIST (%)
			1		
			1		11.3
	608.66				
Stiff, gray & brown, Silty Clay Loam				1.0	20.9
				P	
			1		
			1		
			2	2.0	19.0
			4	P	
	605.16				
Very Stiff, gray, Silty Clay Loam Till		-25			
			3		
			4	2.5	17.9
			5	B	
	602.66				
Medium, gray, Silty Clay Loam Till			4		
			4	0.6	20.3
			6	B	
	600.16				
Stiff, gray, Silty Clay Loam, Till		-30			
			3		
			3	1.8	18.9
			5	B	
		-35			
			3		
			4	1.6	15.6
			6	B	
		-40			

The Unconfined Compressive Strength (UCS) Failure Mode is indicated by (B-Bulge, S-Shear, P-Penetrometer)
The SPT (N value) is the sum of the last two blow values in each sampling zone (AASHTO T206)

ORIGINAL: DLZ Illinois, Inc.
UPDATED: LIN ENGINEERING LTD. Consulting Engineers Springfield, Illinois

	DESIGNED - ZJH	REVISED
	CHECKED - PRD MTH	REVISED
	DRAWN - BAE	REVISED
DATE - 03/25/22	CHECKED - ZJH MTH	REVISED

STATE OF ILLINOIS
DEPARTMENT OF TRANSPORTATION

BORING LOG
STRUCTURE NO. 032-9906
SHEET NO. 48 OF 49 SHEETS

F.A.I. RTE.	SECTION	COUNTY	TOTAL SHEETS	SHEET NO.
80	((32, 47-4)VB, HBR-3) BR, BRR	GRUNDY	143	105
		CONTRACT NO. 66295		
		ILLINOIS FED. AID PROJECT		

Illinois Department of Transportation
Division of Highways
District Nine Materials

SOIL BORING LOG

Page 2 of 2

Date 62502

ROUTE FAI 80 (I-80) DESCRIPTION E.J & E Railroad over I-80 LOGGED BY Larry Myers

SECTION (32,47-4)K, BR-8, BR-9 LOCATION NW 14, SEC. 1, TWP. 34N, RNG. 8E, 3rd PM

COUNTY GRUNDY DRILLING METHOD Hollow Steam Auger HAMMER TYPE CME Automatic

STRUCT. NO. 032-9901 EXISTING
Station 50+01.60

BORING NO. #2:N Abut, NW Quad
Station 50+81.6
Offset 13.00ft Lt
Ground Surface Elev. 629.66 ft

Surface Water Elev. ft
Stream Bed Elev. ft

Groundwater Elev.:
First Encounter 562.7 ft
Upon Completion ft
After Hrs. ft

Description	Elev.	DEPTH (ft)	BLOWS (6")	UCS Qu (tsf)	MOIST (%)
Stiff, gray, Silty Clay Loam Till (continued)			4		
			5	1.9	17.5
			6	B	
		-45			
			3		
			4	1.8	17.3
			7	B	
Very Stiff, gray, Silty Clay Loam Till	581.66				
		-50			
			3		
			5	2.1	17.9
			5	B	
Very Stiff, gray, Silt	576.66				
		-55			
			8		
			10	2.8	20.9
			11	B	
Stiff, gray, Silty Clay Loam Till	571.66				
		-60			
Stiff, gray, Silty Clay Loam Till (continued)			5		
			7	1.7	16.6
			9	B	
		-65			
			3		
			5	1.0	16.5
			7	B	
Medium, gray, loamy, Sand and Gravel	562.66				
		-70			
			7		
			13		10.1
			12		
Very stiff, gray, Clay with thin Silt layers'-Lake type clay deposit Water was observed at depth in hole. Hole caved in during removal of augers-no final water level measurement was available	556.66				
		-75			
			5		
			8	3.8	22.8
			13	B	
End of Boring	553.16				
		-80			

The Unconfined Compressive Strength (UCS) Failure Mode is indicated by (B-Bulge, S-Shear, P-Penetrometer)
The SPT (N value) is the sum of the last two blow values in each sampling zone (AASHTO T206)

Illinois Department of Transportation
Division of Highways
District Nine Materials

SOIL BORING LOG

Page 1 of 2

Date 7802

ROUTE FAI 80 (I-80) DESCRIPTION E.J & E Railroad over I-80 LOGGED BY Larry Myers

SECTION (32,47-4)K, BR-8, BR-9 LOCATION NW 14, SEC. 1, TWP. 34N, RNG. 8E, 3rd PM

COUNTY GRUNDY DRILLING METHOD Hollow Steam Auger HAMMER TYPE CME Automatic

STRUCT. NO. 032-9901 EXISTING
Station 50+01.60

BORING NO. #3:Center Pier, W
Station 49+91.6
Offset 22.00ft Lt
Ground Surface Elev. 609.06 ft

Surface Water Elev. ft
Stream Bed Elev. ft

Groundwater Elev.:
First Encounter 545.6 ft
Upon Completion ft
After Hrs. ft

Description	Elev.	DEPTH (ft)	BLOWS (6")	UCS Qu (tsf)	MOIST (%)
Augered, white and brown, CA06 crushed, Stone					
	607.56				
Very Stiff, gray, Silty Clay Loam Till			4		
			2		
			3		
			3		
		-5	3		17.6
			5		
			2		
			4	2.7	16.9
			6	B	
Stiff, gray, Silty Clay Till	600.56				
			3		
		-10	3	1.2	17.9
			5	B	
			2		
			3	1.5	17.4
			5	B	
			2		
		-15	3	1.1	17.4
			6	B	
			2		
			4	1.5	16.9
			7	B	
			2		
		-20	3	1.4	17.1
Stiff, gray, Silty Clay Till (continued)			6	8	
	588.06				
Very Stiff, gray, Silty Clay Loam Till			2		
			4	2.2	17.7
			6	B	
Stiff, gray, Silty Clay Loam Till	585.56				
			2		
		-25	4	1.3	16.7
			5	B	
			4		
		-30	3	1.7	17.5
			7	B	
Stiff, gray, Silty Clay Loam Till	577.06				
			2		
		-35	4	1.6	22.5
			6	B	
			4		
	569.06	-40	6		22.7

The Unconfined Compressive Strength (UCS) Failure Mode is indicated by (B-Bulge, S-Shear, P-Penetrometer)
The SPT (N value) is the sum of the last two blow values in each sampling zone (AASHTO T206)

Illinois Department of Transportation
Division of Highways
District Nine Materials

SOIL BORING LOG

Page 2 of 2

Date 7802

ROUTE FAI 80 (I-80) DESCRIPTION E.J & E Railroad over I-80 LOGGED BY Larry Myers

SECTION (32,47-4)K, BR-8, BR-9 LOCATION NW 14, SEC. 1, TWP. 34N, RNG. 8E, 3rd PM

COUNTY GRUNDY DRILLING METHOD Hollow Steam Auger HAMMER TYPE CME Automatic

STRUCT. NO. 032-9901 EXISTING
Station 50+01.60

BORING NO. #3:Center Pier, W
Station 49+91.6
Offset 22.00ft Lt
Ground Surface Elev. 609.06 ft

Surface Water Elev. ft
Stream Bed Elev. ft

Groundwater Elev.:
First Encounter 545.6 ft
Upon Completion ft
After Hrs. ft

Description	Elev.	DEPTH (ft)	BLOWS (6")	UCS Qu (tsf)	MOIST (%)
Very stiff, gray, Silty Clay Loam Till with Silt and loamy, Sand layers at 40.3'				2.5	16.2
			13	B	
	565.06				
Stiff, gray, interbedded, Silt and Silty Loam			4		
		-45	7	1.6	17.2
			9	S	
	562.66				
Very stiff, gray, Clay with fine, Silt layes at 59.5'					
			3		
		-50	5	3.1	22.1
			7	B	
			4		
		-55	6	2.5	23.9
			9	B	
			3		
		-60	4	3.1	31.7
Very stiff, gray, Clay with fine, Silt layers at 59.5' (continued)			8	B	
	545.56				
Gray, Sand and Gravel Free water at 63.5'	545.06		23		
Fractured, coarse-grained, pyritic, oolitic, Limestone with small vugs with recrystalized calcite and pyrite Maquoketa Formation Ordovician System	543.56	-65	100/2"		5.2
End of Boring					
		-70			
		-75			
		-80			

The Unconfined Compressive Strength (UCS) Failure Mode is indicated by (B-Bulge, S-Shear, P-Penetrometer)
The SPT (N value) is the sum of the last two blow values in each sampling zone (AASHTO T206)

ORIGINAL: DLZ Illinois, Inc.
UPDATED: LIN ENGINEERING, LTD. Consulting Engineers Springfield, Illinois

	DESIGNED - ZJH	REVISED
	CHECKED - PRD MTH	REVISED
	DRAWN - BAE	REVISED
DATE - 03/25/22	CHECKED - ZJH MTH	REVISED

STATE OF ILLINOIS
DEPARTMENT OF TRANSPORTATION

BORING LOG
STRUCTURE NO. 032-9906

SHEET NO. 49 OF 49 SHEETS

F.A.I. RTE.	SECTION	COUNTY	TOTAL SHEETS	SHEET NO.
80	((32, 47-4)VB, HBR-3) BR, BRR	GRUNDY	143	106
		CONTRACT NO. 66295		
	ILLINOIS	FED. AID PROJECT		

Existing Structure: SN 032-0065 built in 1959 as FAI Rte. 80, Section (32,47)-4 at Sta. 1735+96.90. The structure is a four span bridge with a 7" deck on PPC I-beams, measuring 200'-9" back to back abutments, 30'-0" out to out, with a 1°18'20" left ahead skew. The substructure consists of concrete pile supported open abutments and multi-column concrete piers supported on timber piles. The proposed work will be performed under road closure.

INDEX OF SHEETS

SCOPE OF WORK

1. Remove portions of existing concrete deck and curbs as required to replace expansion joints at abutments and piers.
2. Perform ¾" scarification to top of existing bridge deck.
3. Provide new strip seal expansion joints and adjacent superstructure concrete over abutments and piers.
4. Place 2¼" latex concrete overlay on bridge deck and asphalt overlay on the approach pavement.
5. Perform bridge deck grooving on new concrete overlay and apply protective coat to new overlay and the top/inside surface of new curb concrete.
6. Extend or plug existing deck drains.
7. Clean and paint the existing steel bridge rails and all bearings.
8. Add new steel railing inside existing rail and upgrade existing guardrail connections at all four quadrants of the bridge.
9. Raise existing pier crash walls to 5'-0" above ground elevation.
10. Perform concrete repairs on substructure units.
11. Apply Concrete Sealer to all exposed faces of the new concrete on pier crash walls, and also on the traffic face of the existing pier surfaces.

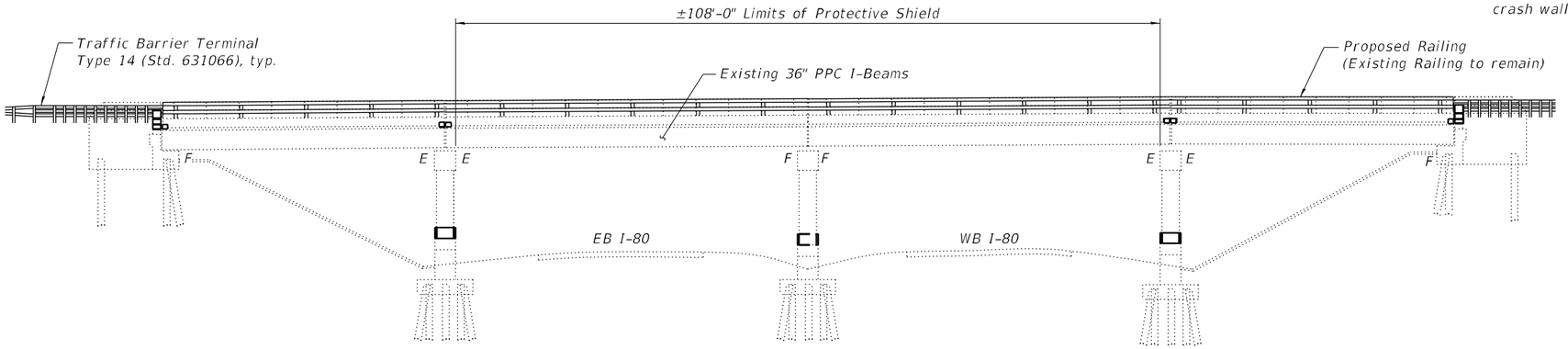

ELEVATION

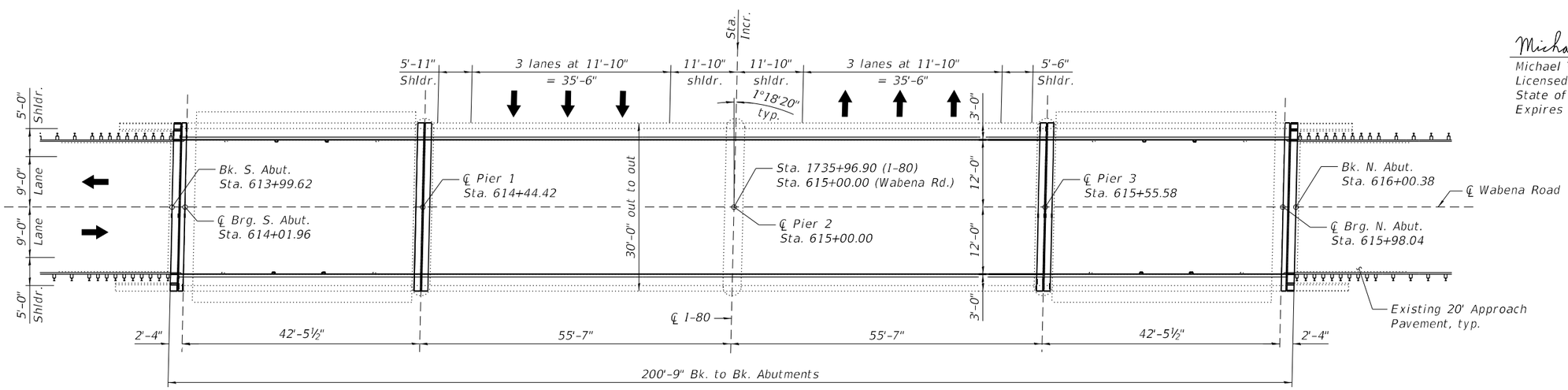

PLAN

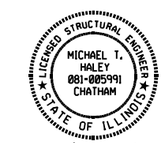

Michael T. Haley 01/10/2025
Michael T. Haley — Date
Licensed Structural Engineer
State of Illinois No. 081-005991
Expires 11/30/2024

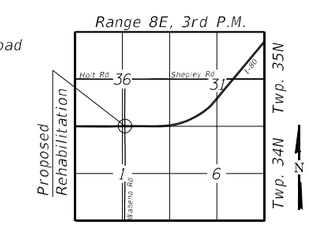

LOCATION SKETCH

DESIGN SPECIFICATIONS

(New Construction)
2002 AASHTO Standard Specifications for Highway Bridges

DESIGN STRESSES

FIELD UNITS - NEW CONSTRUCTION
f'c = 4,000 psi (Superstructure)
fy = 60,000 psi (Reinforcement)

LOADING HS-15

(Original Construction)
No allowance for future wearing surface.

GENERAL PLAN AND ELEVATION
WABENA ROAD OVER I-80
F.A.I. RTE. 80 SECTION (32,47-4)VB
GRUNDY/KENDALL COUNTY
STATION 615+00.00
STRUCTURE NO. 032-0065

LIN ENGINEERING, LTD. Consulting Engineers Springfield, Illinois	USER NAME =	DESIGNED - MSS	REVISED -	STATE OF ILLINOIS DEPARTMENT OF TRANSPORTATION	F.A.I. RTE.	SECTION	COUNTY / TOTAL SHEETS / SHEET NO.
		CHECKED - AGJ	REVISED -		80	(32,47-4)VB	GRUNDY/KENDALL / 143 / 107
	PLOT SCALE=	DRAWN - AJF	REVISED -				CONTRACT NO. 66295
	PLOT DATE = 1/9/2025	CHECKED - MTH	REVISED -	SHEET 1 OF 12 SHEETS			ILLINOIS FED. AID PROJECT

MODEL: Default
FILE NAME: E:\1815-6\Struct\Final Design\CADD\CADD Sheets\0320065-66295-001-GPE.dgn
1/9/2025 1:57:03 PM

GENERAL NOTES

1. Reinforcement bars designated (E) shall be epoxy coated.
2. Plan dimensions and details relative to existing plans are subject to nominal construction variations. The Contractor shall field verify existing dimensions and details affecting new construction and make necessary approved adjustments prior to construction or ordering of materials. Such variations shall not be cause for additional compensation for a change in scope of the work, however, the Contractor will be paid for the quantity actually furnished at the unit price bid for the work.
3. Existing reinforcement bars extending into the removal area shall be cleaned, straightened and incorporated into the new construction. Any reinforcement bars that are damaged during concrete removal shall be replaced with an approved bar splicer or anchorage system. Cost included with Concrete Removal.
4. Cost of removal and disposal of existing expansion joints shall be included in the cost of Concrete Removal.
5. Protective Coat shall be applied to the top surface of new overlay and to the inside and top faces of new concrete adjacent to joints.
6. Joint openings shall be adjusted according to Article 520.04 of the Std. Specs. when the concrete adjacent to joints is poured at an ambient temperature other than 50°F.
7. Expansion joints shall be fabricated to conform to the existing cross slope of the bridge.
8. The Contractor shall exercise care during removal of existing joints to ensure that the slab, beams, and diaphragms' integrity will not be detrimentally impacted. The Contractor shall repair any damage(s) to the slab, beams and diaphragms caused by their operation as directed by the Engineer at no additional cost to the Department.
9. Cleaning and painting of the existing steel handrail and bearings shall be as specified in the special provision for "Cleaning and Painting Existing Steel Structures". All railing and and bearings shall be cleaned per Near White Blast Cleaning (SSPC-SP10) and shall be painted according to the requirements of Organic Zinc-Rich / Epoxy / Urethane paint system. The color of the final finish coat for all steel surfaces shall be Gray, Munsell No 5B 7/1.
10. The existing structural steel coating contains lead. The Contractor shall take appropriate precautions to deal with the presence of lead on this project.
11. Concrete Sealer shall be applied to all exposed faces of the new concrete on pier crash walls, and also on the traffic face of the existing pier surfaces.

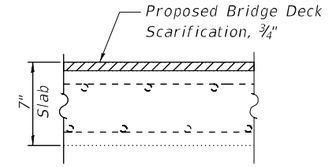

EXISTING BRIDGE DECK CROSS SECTION

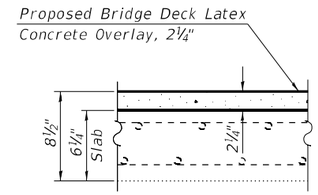

PROPOSED BRIDGE DECK CROSS SECTION

TOTAL BILL OF MATERIAL

ITEM	UNIT	SUPER	SUB	TOTAL
Concrete Removal	Cu. Yd.	10.2	-	10.2
Protective Shield	Sq. Yd.	360	-	360
Concrete Structures	Cu. Yd.	-	9.9	9.9
Concrete Superstructure	Cu. Yd.	11.8	-	11.8
Protective Coat	Sq. Yd.	695	-	695
Cleaning and Painting Structural Steel No. 1	L. Sum	1	-	1
Containment and Disposal of Lead Paint Cleaning Residues No. 1	L. Sum	1	-	1
Reinforcement Bars, Epoxy Coated	Pound	1,880	-	1,880
Steel Railing, Type C0-10	Foot	402	-	402
Preformed Joint Strip Seal	Foot	116	-	116
Concrete Sealer	Sq. Ft.	-	1,512	1,512
Floor Drain Extensions	Each	8	-	8
Bridge Deck Grooving	Sq. Yd.	482	-	482
Bridge Deck Latex Concrete Overlay, 2¼" Inches	Sq. Yd.	510	-	510
Bridge Deck Scarification, 3/4 Inch	Sq. Yd.	510	-	510
Structural Repair of Concrete (Depth Equal to or Less Than 5 Inches)	Sq. Ft.	71	-	71
Cleaning Bridge Seats	Sq. Ft.	472	-	472
Deck Slab Repair (Full Depth, Type I)	Sq. Yd.	10	-	10
Polymer Concrete	Cu. Ft.	2.4	-	2.4

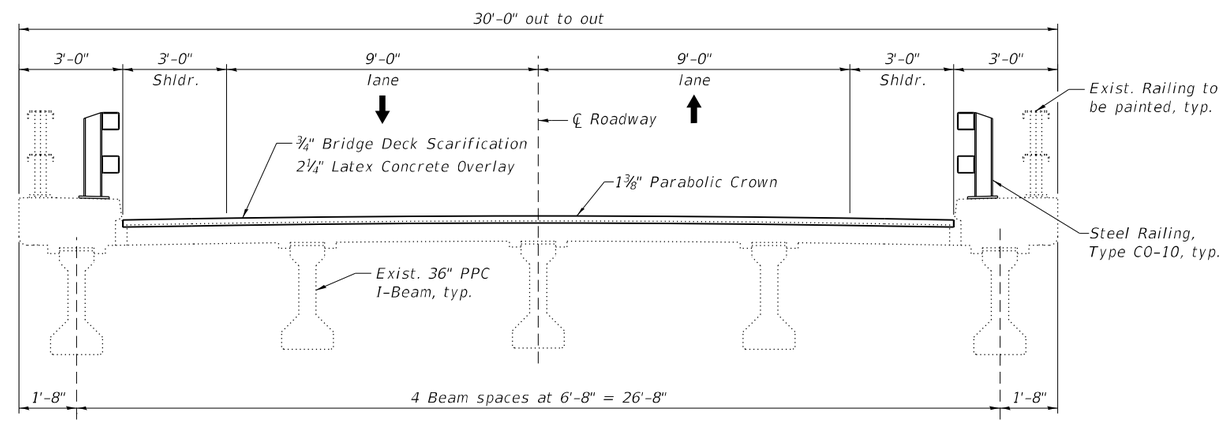

CROSS SECTION - SPANS 1 & 4

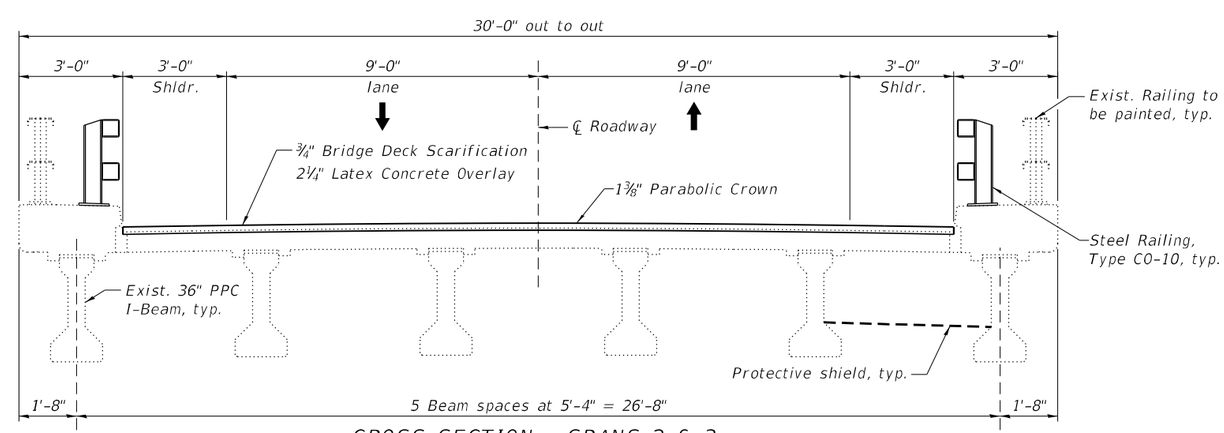

CROSS SECTION - SPANS 2 & 3

Note:
All transverse dimensions are measured at right angles to ℄ roadway.

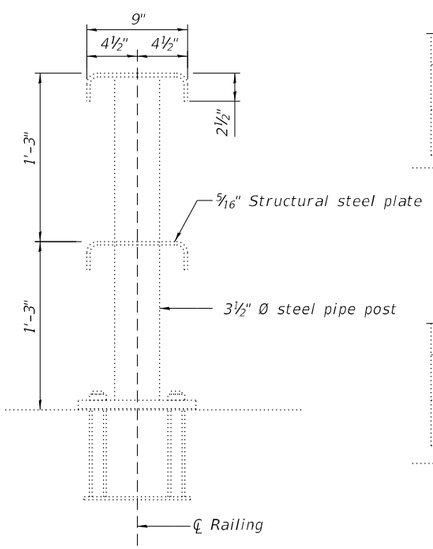

RAILING

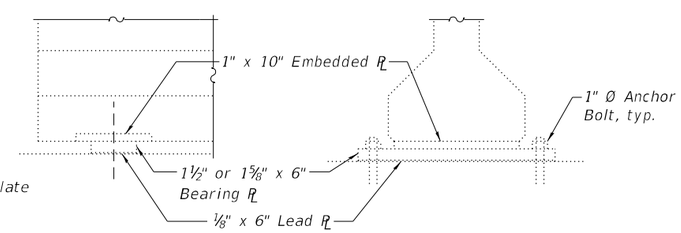

FIXED BEARINGS

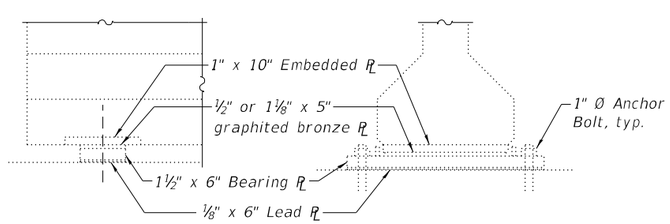

EXPANSION BEARINGS

STEEL PAINTING DETAILS

MODEL: Default
FILE NAME: E:\1815-6\Struct\Final Design\CADD\CADD Sheets\0320065-66295-002-GeneralData.dgn
1/9/2025 1:57:04 PM

LIN ENGINEERING, LTD. Consulting Engineers Springfield, Illinois	USER NAME =	DESIGNED - MSS	REVISED -
		CHECKED - AGJ	REVISED -
	PLOT SCALE=	DRAWN - AJF	REVISED -
	PLOT DATE = 1/9/2025	CHECKED - MTH	REVISED -

STATE OF ILLINOIS
DEPARTMENT OF TRANSPORTATION

GENERAL DATA
STRUCTURE NO. 032-0065

SHEET 2 OF 12 SHEETS

F.A.I. RTE.	SECTION	COUNTY	TOTAL SHEETS	SHEET NO.
80	(32,47-4)VB	GRUNDY/KENDALL	143	108
		CONTRACT NO. 66295		
	ILLINOIS	FED. AID PROJECT		

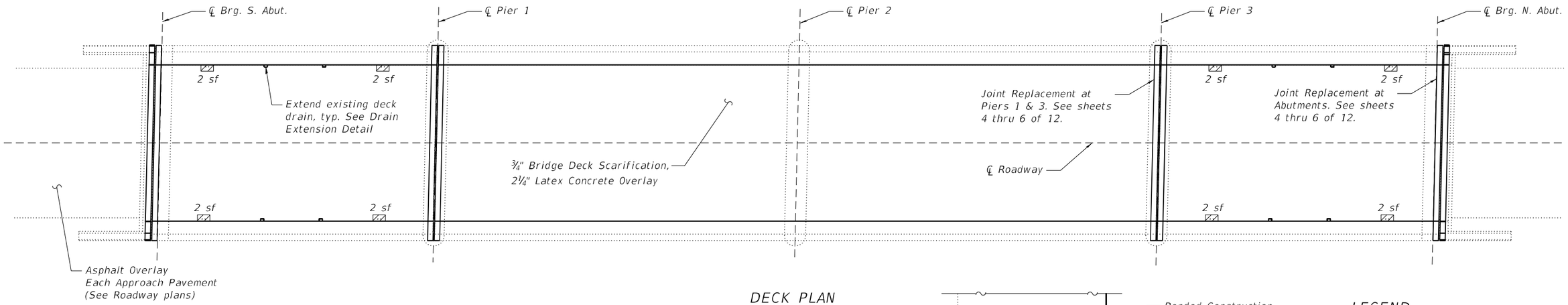

DECK PLAN

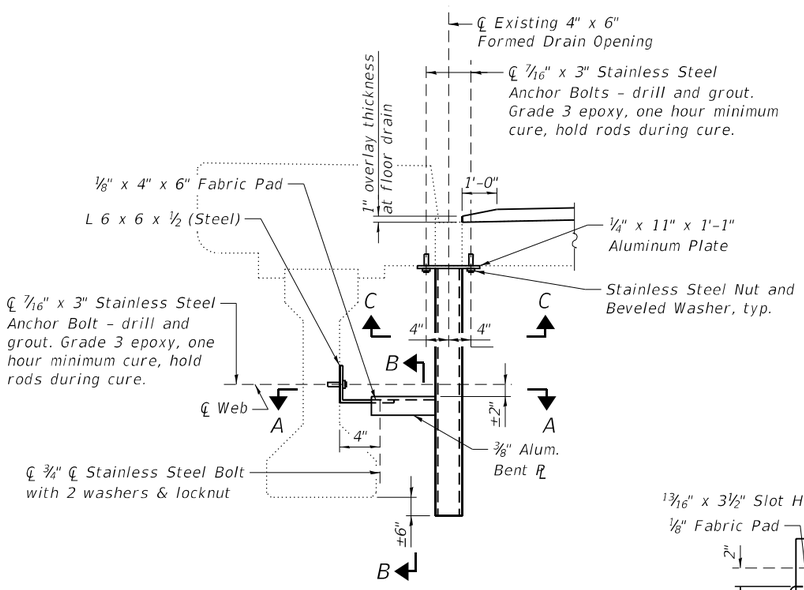

DRAIN EXTENSION DETAIL

(8 locations)

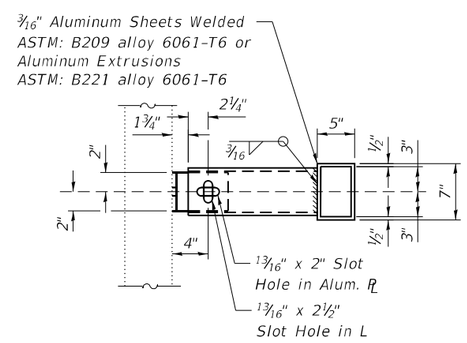

SECTION A-A

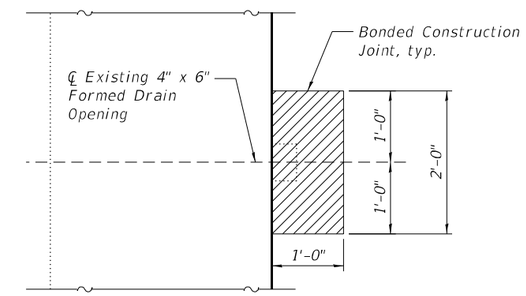

PARTIAL PLAN

LEGEND

Floor Drain Elimination paid as Deck Slab Repair (Full Depth, Type I)

sf - Square Feet

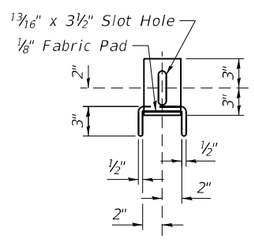

SECTION B-B

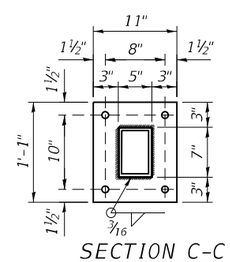

SECTION C-C

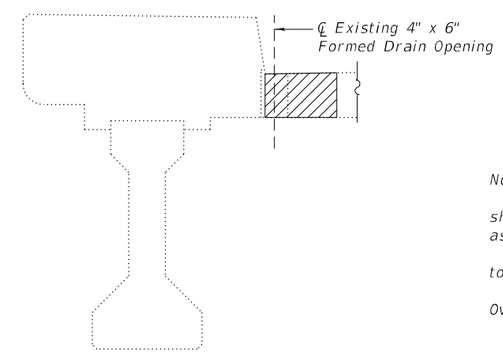

SECTION AT DRAIN

Hatched areas indicate concrete sections to be removed and replaced. Perimeters of concrete removal areas shall be saw cut ¾" prior to the removal of concrete.

DRAIN ELIMINATION DETAIL

Notes:

Repair areas shown are estimated. The Engineer shall document actual locations of repairs on as-built plans.

Quantity of Deck Slab Repair has been increased to account for anticipated findings during construction.

See special provision Bridge Deck Latex Concrete Overlay for payment of partial depth deck repairs.

BILL OF MATERIAL

ITEM	UNIT	TOTAL
Deck Slab Repair (Full Depth, Type I)	Sq. Yd.	10
Floor Drain Extension	Each	8

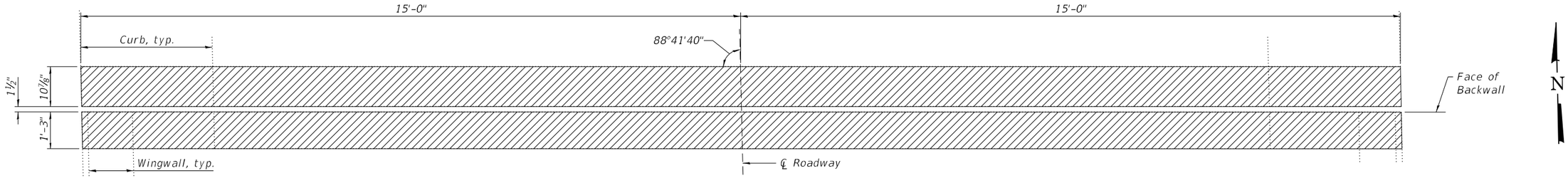

JOINT REMOVAL AT SOUTH ABUTMENT

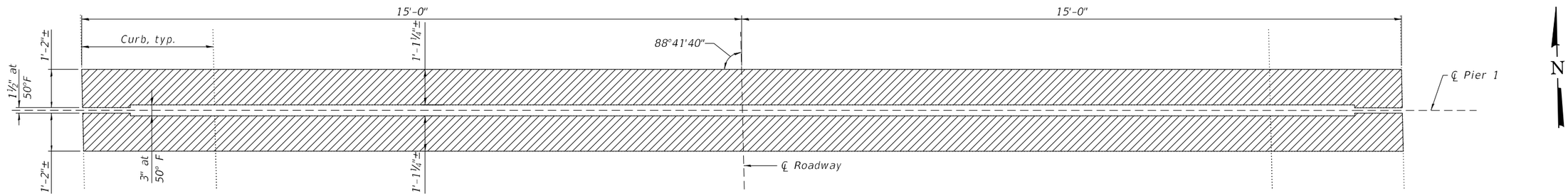

JOINT REMOVAL AT PIER 1

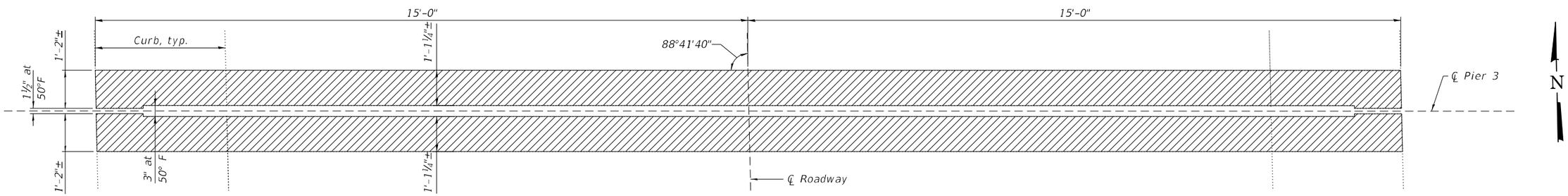

JOINT REMOVAL AT PIER 3

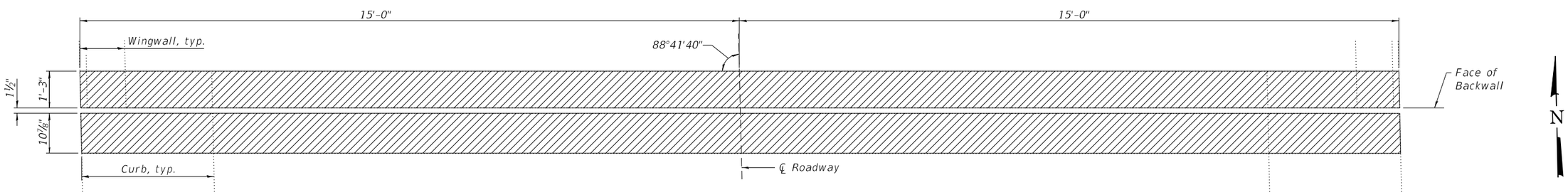

JOINT REMOVAL AT NORTH ABUTMENT

Notes:
Hatched areas indicate limits of Concrete Removal.
See sheet 6 of 12 for Sections.

(Sheet 1 of 3)

MODEL: Default
FILE NAME: E:\1815-6\Struct\Final Design\CADD\CADD Sheets\0320065-66295-004-JointReplacementDetails.dgn
1/9/2025 1:57:05 PM

LIN ENGINEERING,LTD. Consulting Engineers Springfield, Illinois	USER NAME =	DESIGNED - MSS	REVISED -	STATE OF ILLINOIS DEPARTMENT OF TRANSPORTATION	JOINT REPLACEMENT DETAILS STRUCTURE NO. 032-0065	F.A.I. RTE.	SECTION	COUNTY	TOTAL SHEETS / SHEET NO.
		CHECKED - AGJ	REVISED -			80	(32,47-4)VB	GRUNDY/KENDALL	143 / 110
	PLOT SCALE=	DRAWN - AJF	REVISED -					CONTRACT NO. 66295	
	PLOT DATE = 1/9/2025	CHECKED - MTH	REVISED -		SHEET 4 OF 12 SHEETS		ILLINOIS	FED. AID PROJECT	

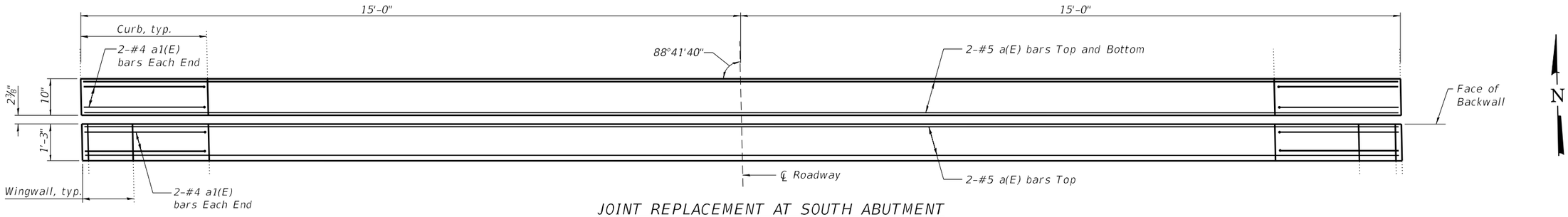

JOINT REPLACEMENT AT SOUTH ABUTMENT

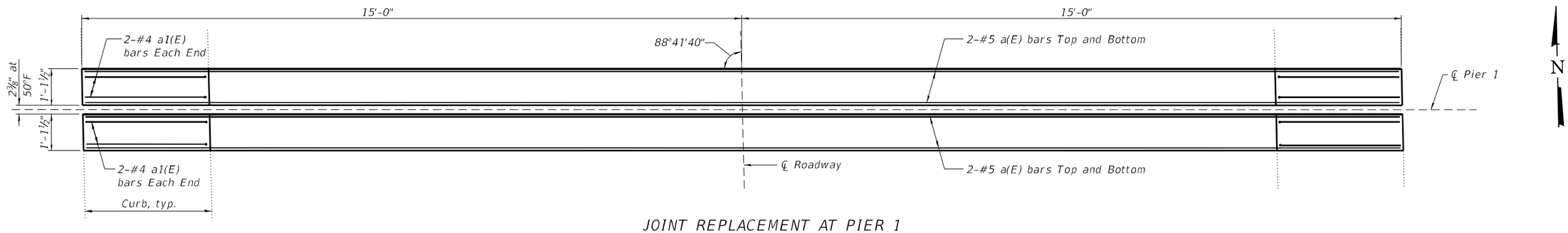

JOINT REPLACEMENT AT PIER 1

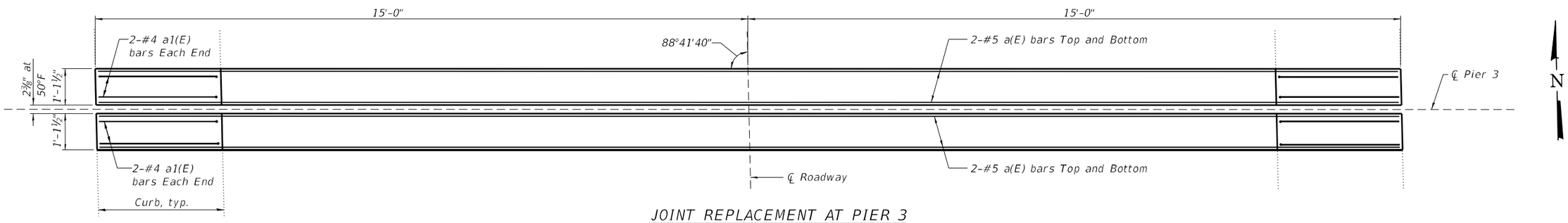

JOINT REPLACEMENT AT PIER 3

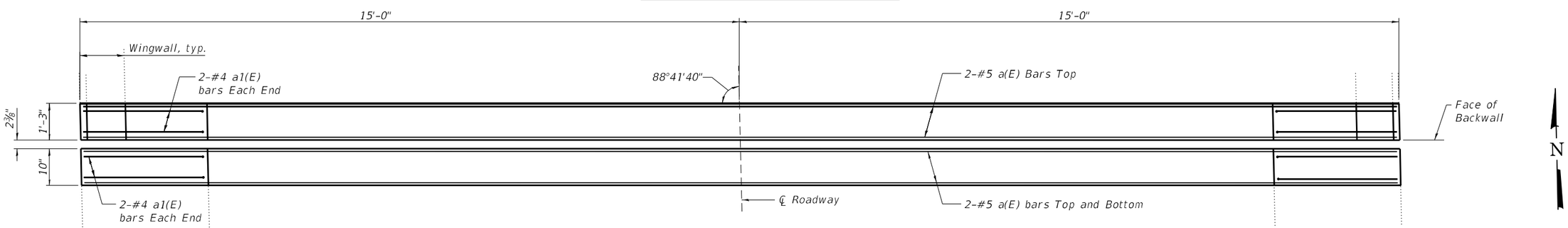

JOINT REPLACEMENT AT NORTH ABUTMENT

Note:
See sheet 6 of 12 for Sections.

(Sheet 2 of 3)

MODEL: Default
FILE NAME: E:\1815-6\Struct\Final Design\CADD\CADD Sheets\0320065-66295-005-JointReplacementDetails.dgn
1/9/2025 1:57:06 PM

LIN ENGINEERING, LTD. Consulting Engineers Springfield, Illinois	USER NAME =	DESIGNED - MSS	REVISED -	STATE OF ILLINOIS DEPARTMENT OF TRANSPORTATION	JOINT REPLACEMENT DETAILS STRUCTURE NO. 032-0065	F.A.I. RTE.	SECTION	COUNTY	TOTAL SHEETS / SHEET NO.
		CHECKED - AGJ	REVISED -			80	(32,47-4)VB	GRUNDY/KENDALL	143 / 111
	PLOT SCALE=	DRAWN - AJF	REVISED -					CONTRACT NO. 66295	
	PLOT DATE = 1/9/2025	CHECKED - MTH	REVISED -		SHEET 5 OF 12 SHEETS		ILLINOIS	FED. AID PROJECT	

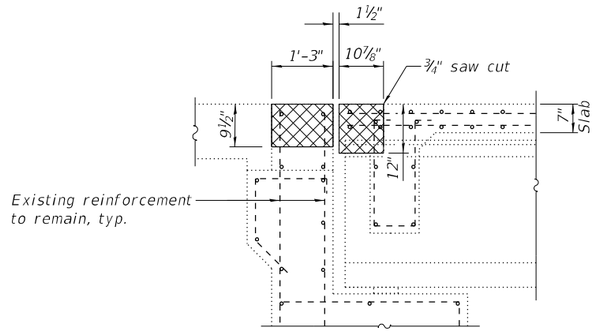

SECTION THRU JOINT AT ABUTMENTS
(Showing Removal; Dimensions at right angles)

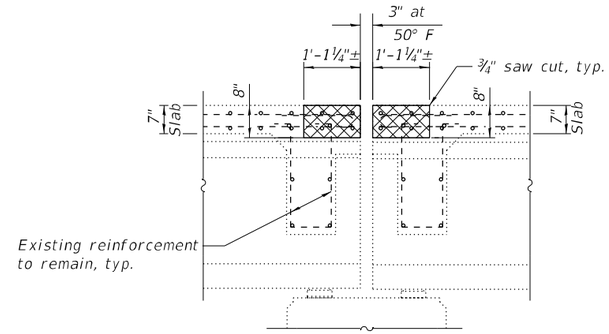

SECTION THRU JOINT AT PIERS 1 & 3
(Showing Removal; Dimensions at right angles)

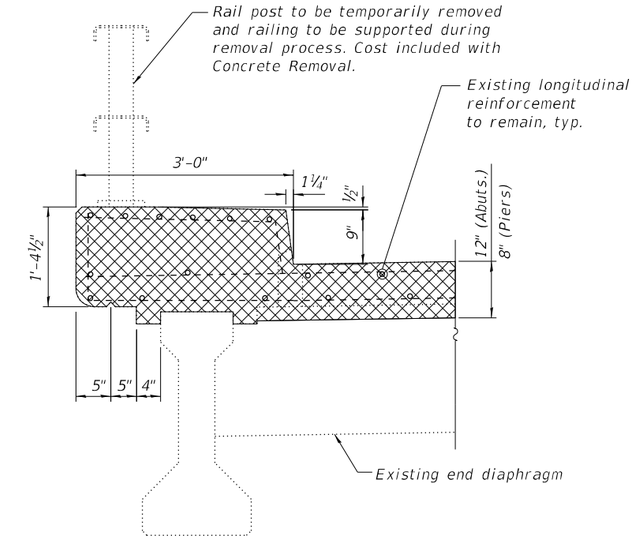

SECTION THRU CURB AT JOINT
(Showing Removal)

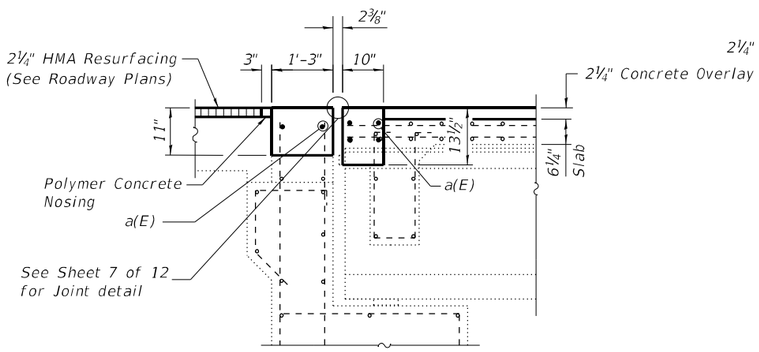

SECTION THRU JOINT AT ABUTMENTS
(Showing Proposed; Dimensions at right angles)

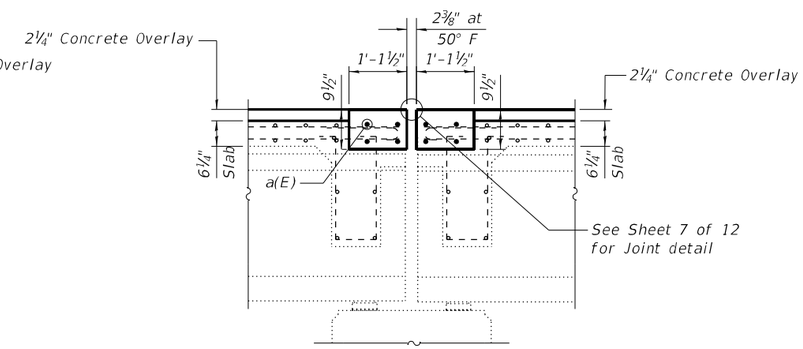

SECTION THRU JOINT AT PIERS 1 & 3
(Showing Proposed; Dimensions at right angles)

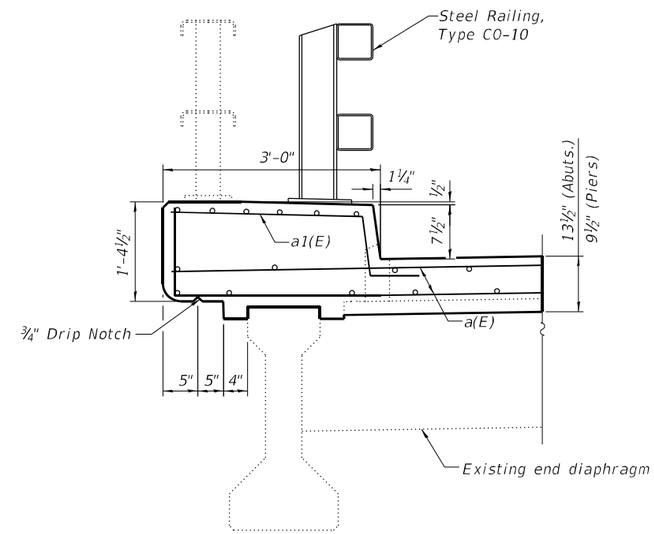

SECTION THRU CURB AT JOINT
(Showing Proposed)

BILL OF MATERIAL

Bar	No.	Size	Length	Shape
a(E)	28	#5	29'-8"	
a1(E)	32	#4	5'-2"	
Concrete Removal			Cu. Yd.	10.2
Concrete Superstructure			Cu. Yd.	11.8
Reinforcement Bars, Epoxy Coated			Pound	980
Polymer Concrete			Cu. Ft.	2.4

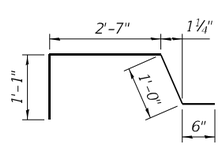

BAR a1(E)

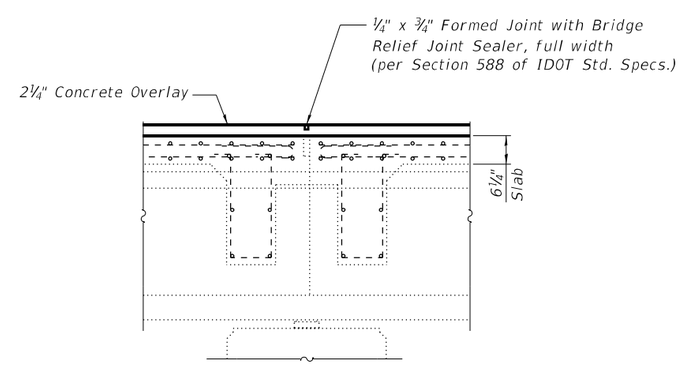

SECTION THRU JOINT AT PIER 2
(Showing Removal; Dimensions at right angles)

Note:
Cross-hatched areas indicate limits of Concrete Removal.

(Sheet 3 of 3)

MODEL: Default
FILE NAME: E:\1815-6\Struct\Final Design\CADD\CADD Sheets\0320065-66295-006-JointReplacementDetails.dgn

LIN ENGINEERING,LTD. Consulting Engineers Springfield, Illinois	USER NAME =	DESIGNED - MSS	REVISED -	STATE OF ILLINOIS DEPARTMENT OF TRANSPORTATION	JOINT REPLACEMENT DETAILS STRUCTURE NO. 032-0065	F.A.I. RTE.	SECTION	COUNTY	TOTAL SHEETS / SHEET NO.
		CHECKED - AGJ	REVISED -			80	(32,47-4)VB	GRUNDY/KENDALL	143 / 112
	PLOT SCALE=	DRAWN - AJF	REVISED -					CONTRACT NO. 66295	
	PLOT DATE = 1/9/2025	CHECKED - MTH	REVISED -		SHEET 6 OF 12 SHEETS		ILLINOIS	FED. AID PROJECT	

1/9/2025 1:57:07 PM

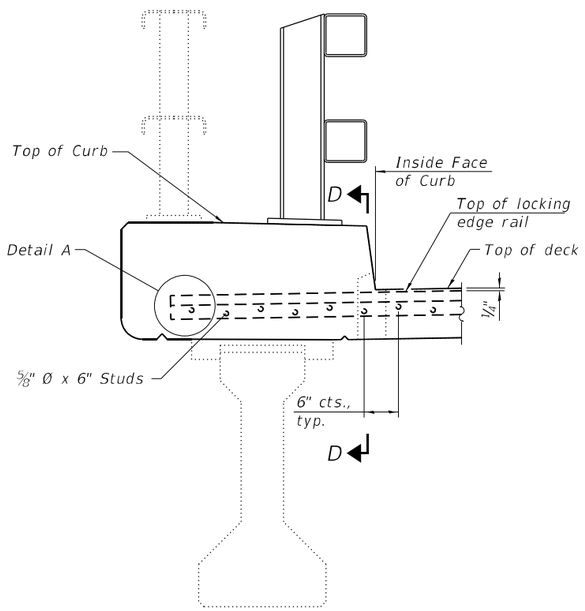

SECTION AT PARAPET

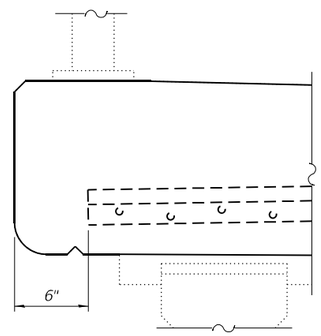

DETAIL A

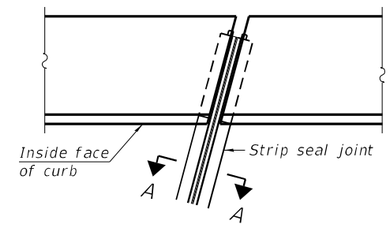

PLAN AT CURB

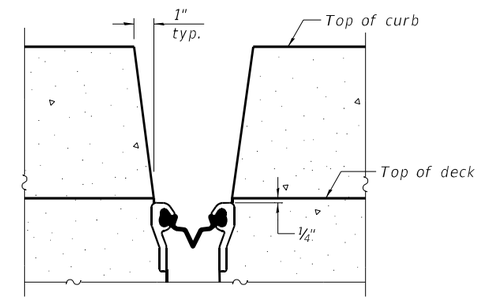

SECTION D-D
(at Rt. ∠'s)

Notes:

The strip seal shall be made continuous and shall have a minimum thickness of 1/4". The configuration of the strip seal shall match the configuration of the locking edge rails. Open or "webbed" strip seal gland configurations are not permitted. The gland shall be sized for a maximum rated movement of 4 inches.

The locking edge rails depicted are configured for typical applications and are conceptual only. The actual configuration of the locking edge rails and matching strip seal may vary from manufacturer to manufacturer provided they fit the application and meet the minimum anchorage shown. Flanged edge rails, however, will not be allowed. Locking edge rails may exceed the 4 1/2" maximum depth provided the anchorage system is revised according to the manufacturer's recommendation.

The manufacturer's recommended installation methods shall be followed.

All steel components shall be galvanized after fabrication according to Article 520.03 of the Standard Specifications.

The Maximum space between locking edge rail segments shall be 3/16" and sealed with a suitable sealant; however, any rail joint within 10' measured perpendicular to the face of the curb or parapet shall be welded as shown in the locking edge rail splice detail.

Cost of anchorage studs are included with Preformed Joint Strip Seal.

The concrete opening below the strip seal will vary based on the locking edge rail chosen by the Contractor. Deck and curb lengths shown elsewhere in the plans are dimensioned to the concrete opening, not the joint opening, and are based on the rolled locking edge rail. If the Contractor elects to use a different locking edge rail, dimensional adjustments may be required.

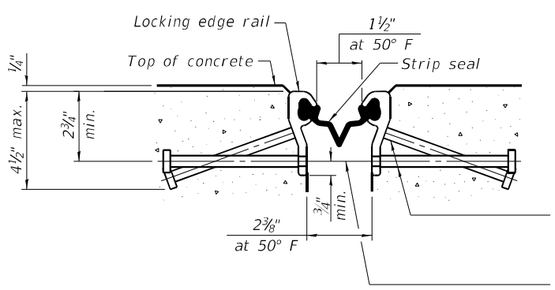

SHOWING ROLLED RAIL JOINT

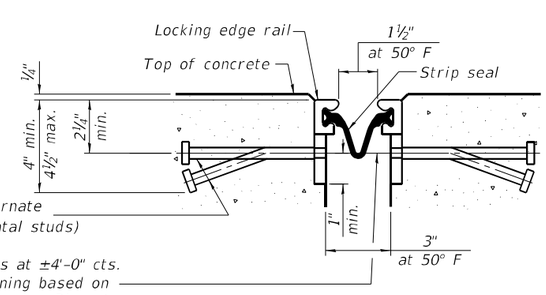

SHOWING WELDED RAIL JOINT

* 5/8" Ø x 6" studs @ 6" cts. (alternate angled/bent studs with horizontal studs)

3/8" ϕ threaded rods in 7/16" ϕ holes at ±4'-0" cts. for holding the proper joint opening based on the temperature during the deck pour. Place to miss studs. All rods shall be burned, or sawed off flush with the plates after concrete is set.

SECTION A-A

* Granular or solid flux filled headed studs conforming to Article 1006.32 of the Std. Specs., automatically end welded.

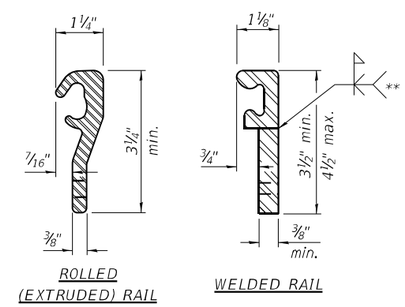

LOCKING EDGE RAILS

** Back gouge not required if complete joint penetration is verified by mock-up.

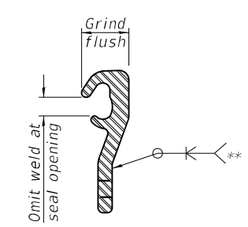

LOCKING EDGE RAIL SPLICE

The inside of the locking edge rail groove shall be free of weld residue. Rolled rail shown, welded rail similar.

BILL OF MATERIAL

Item	Unit	Total
Preformed Joint Strip Seal	Foot	116

LIN ENGINEERING,LTD.
Consulting Engineers
Springfield, Illinois

USER NAME =	DESIGNED - MSS	REVISED -	
	CHECKED - AGJ	REVISED -	
PLOT SCALE=	DRAWN - AJF	REVISED -	
PLOT DATE = 1/9/2025	CHECKED - MTH	REVISED -	

STATE OF ILLINOIS
DEPARTMENT OF TRANSPORTATION

PREFORMED JOINT STRIP SEAL
STRUCTURE NO. 032-0065

SHEET 7 OF 12 SHEETS

F.A.I. RTE.	SECTION	COUNTY	TOTAL SHEETS	SHEET NO.
80	(32,47-4)VB	GRUNDY/KENDALL	143	113

CONTRACT NO. 66295

ILLINOIS FED. AID PROJECT

MODEL: Default
FILE NAME: E:\1815-6\Struct\Final Design\CADD\CADD Sheets\0320065-66295-007-PreformedJointStripSeal.dgn

1/9/2025 1:57:08 PM

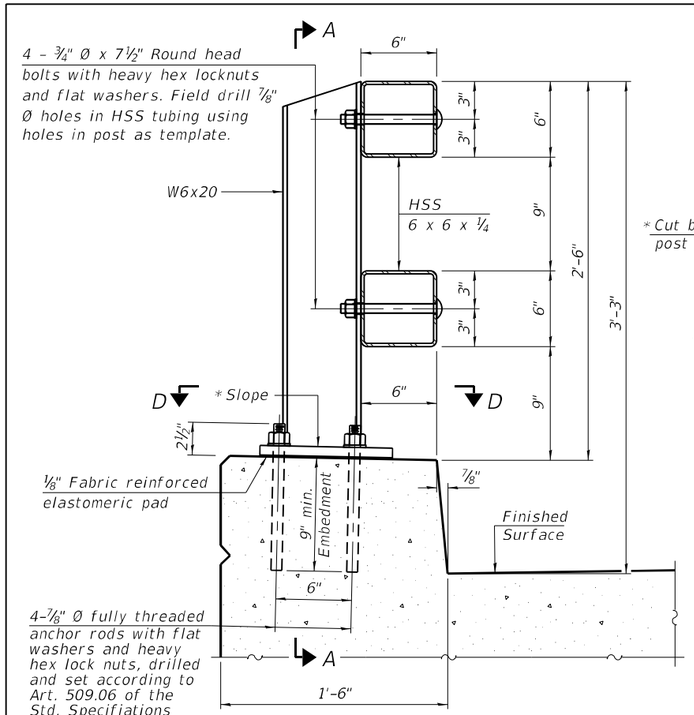

SECTION AT RAIL POST
(New construction)

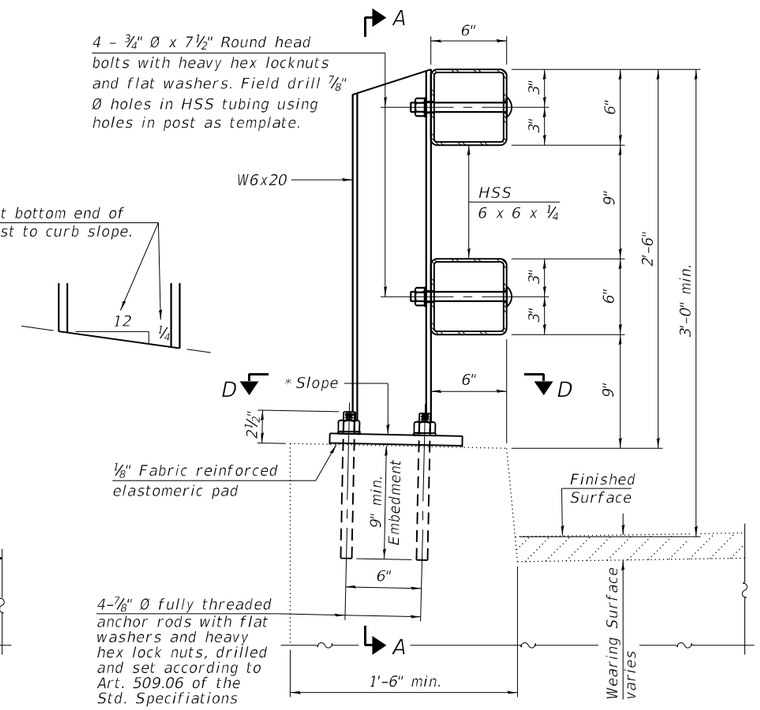

SECTION AT RAIL POST
(Retrofit construction)

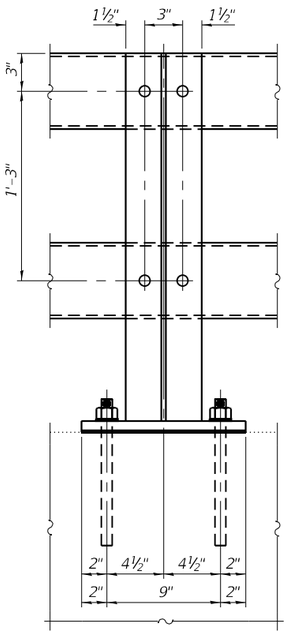

SECTION A-A

Notes:

All HSS tubing shall be ASTM A500 grade C.

All plates shall be AASHTO M270 grade 50.

All heavy hex nuts shall be according to ASTM A563 grade DH.

All fully threaded anchor rods shall be ASTM F1554 grade 105.

The post base plate shall be fastened to the curb snug tight and given an additional ⅛" turn.

Posts shall not be located closer than 2'-6" to a bridge expansion joint.

Provide one ⅛" and two 1/16" steel shims for 25% of the posts. Shims shall be similar to base plates in size and holes.

All steel rail elements shall be galvanized according to Article 509.05 of the Standard Specifications.

All HSS tubing shall be CVN tested according to Article 1006.34(b) of the Standard Specifications.

Rail splice inserts may be built out of 2 -⅜" bent plates in lieu of the 4 plate rail splice inserts shown, provided the outside dimensions are matched.

All round head bolts shall be ASTM A449.

The centerline of rail splices shall be placed between 1'-8" to 2'-6" from the centerline of the posts. The free end of the splice tube shall be oriented away from the closest post.

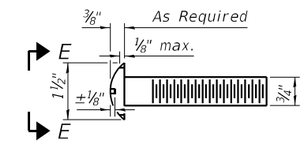

ROUND HEAD BOLT DETAIL

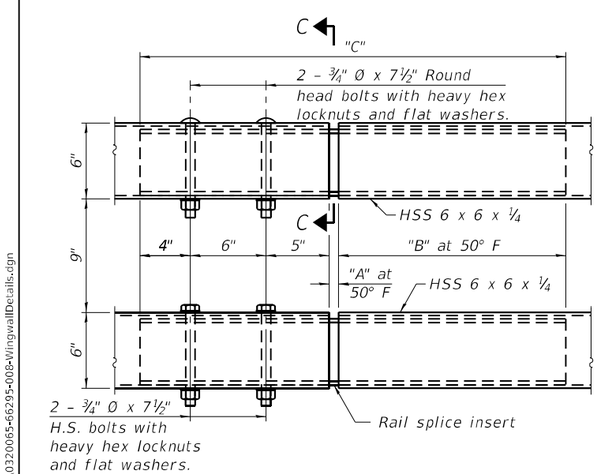

TOP AND BOTTOM RAIL SPLICE ELEVATION

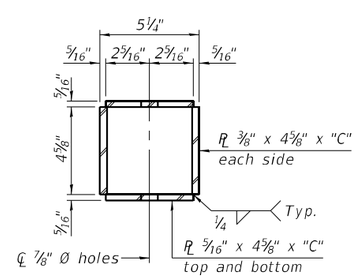

SECTION C-C

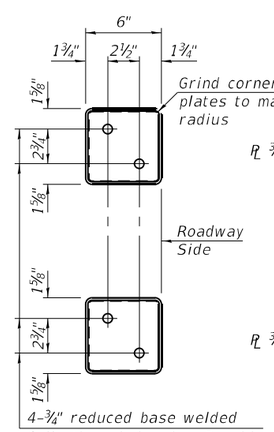

VIEW B-B

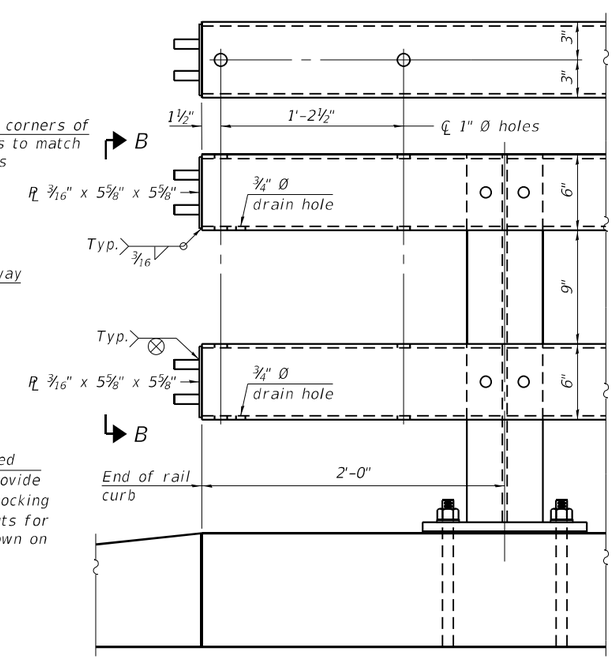

END OF RAIL DETAILS

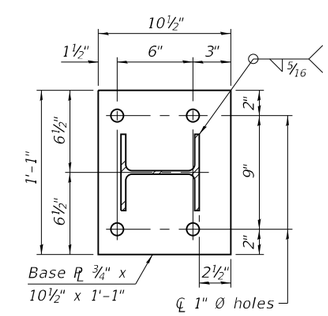

SECTION D-D

VIEW E-E

With Slot (shown) or Approved Recess

Without Slot or Recess

RAILING CRITERIA

MASH 2016 Test Level	4
Railing Weight (plf)	75
Min f'c (psi)	4,500
Post Spacing Range	6'-8" - 10'-0"

SPLICE DIMENSIONS

Location	T	A	B	C
All locs. not over exp. jts.	0	½"	1'-6"	2'-9½"
Over Strip Seal Jt.	≤4"	2½"	1'-8"	3'-1½"
Over Finger or Modular Jt.	≤9½"	5½"	1'-10¾"	3'-7¼"
Over Finger or Modular Jt.	≤15"	8¼"	2'-1½"	4'-0¾"

T = ; total movement along centerline of roadway at expansion joint.

BILL OF MATERIAL

Item	Unit	Quantity
Steel Railing, Type CO-10	Foot	402

R-42 5-15-2023

MODEL: Default
FILE NAME: E:\1815-6\Struct\Final Design\CADD\CADD Sheets\0320065-66295-008-WingwallDetails.dgn

LIN ENGINEERING, LTD.
Consulting Engineers
Springfield, Illinois

USER NAME =	DESIGNED - MSS	REVISED -	
	CHECKED - AGJ	REVISED -	
PLOT SCALE=	DRAWN - AJF	REVISED -	
PLOT DATE = 1/9/2025	CHECKED - MTH	REVISED -	

STATE OF ILLINOIS
DEPARTMENT OF TRANSPORTATION

STEEL RAILING, TYPE CO-10
STRUCTURE NO. 032-0065

SHEET 8 OF 12 SHEETS

F.A.I. RTE.	SECTION	COUNTY	TOTAL SHEETS	SHEET NO.
80	(32,47-4)VB	GRUNDY/KENDALL	143	114

CONTRACT NO. 66295

ILLINOIS FED. AID PROJECT

1/9/2025 1:57:08 PM

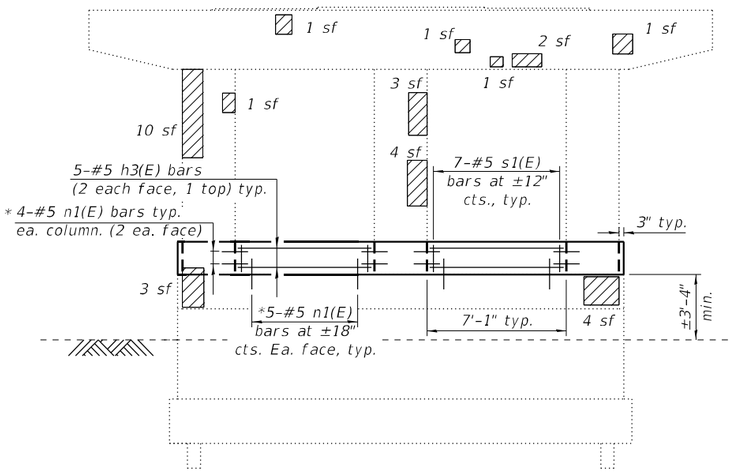

ELEVATION - PIER 1

(Looking North)

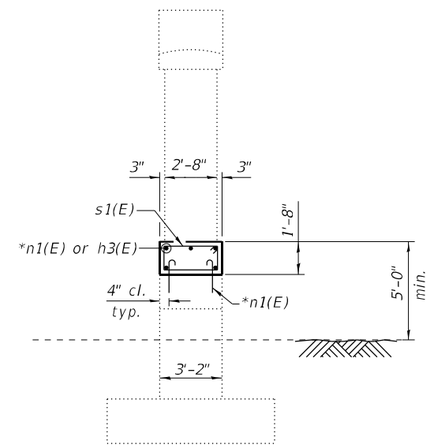

END VIEW

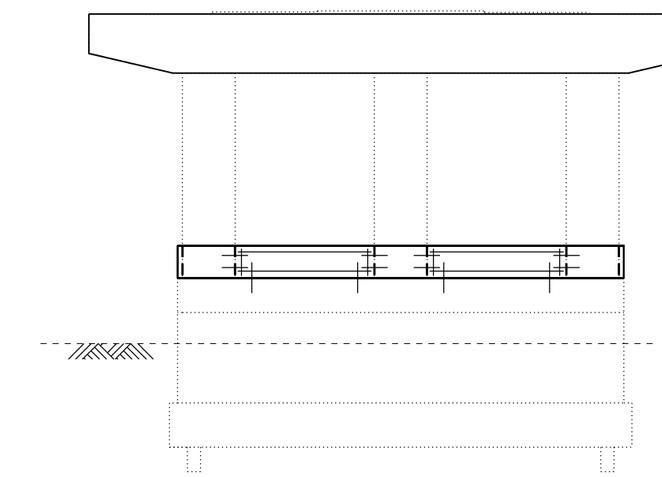

ELEVATION - PIER 1

(Looking South)

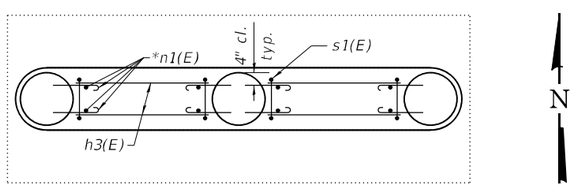

PLAN - PIER 1

* Epoxy grout n(E) bars in 9" min. deep holes according to Article 584 of the Standard Specifications.

LEGEND

Structural Repair of Concrete (Depth Equal To or Less Than 5 in.)

sf Square Feet

Notes:

Repair of the existing pier shall include but may not be limited to the areas shown. The actual area to be repaired shall be determined by the Engineer at the time of construction.

Cost of epoxy grouting bars shall be included with Reinforcement Bars, Epoxy Coated.

BILL OF MATERIAL

Bar	No.	Size	Length	Shape
h3(E)	10	#5	6'-9"	
n1(E)	36	#5	2'-5"	
s1(E)	14	#5	9'-3"	
Concrete Structures			Cu. Yd.	3.3
Reinforcement Bars, Epoxy Coated			Pound	300
Structural Repair of Concrete (Depth Equal To or Less Than 5 in.)			Sq. Ft.	31

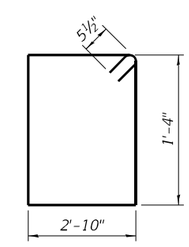

BAR s1(E)

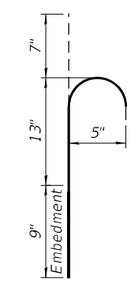

BAR n1(E)

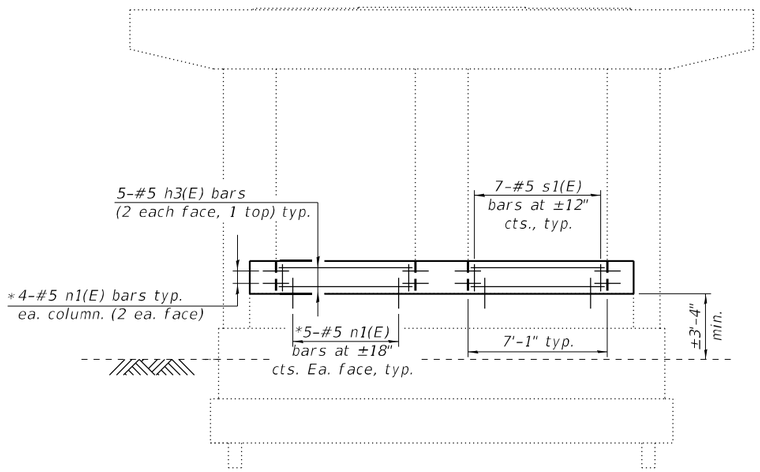

ELEVATION - PIER 2
(Looking North)

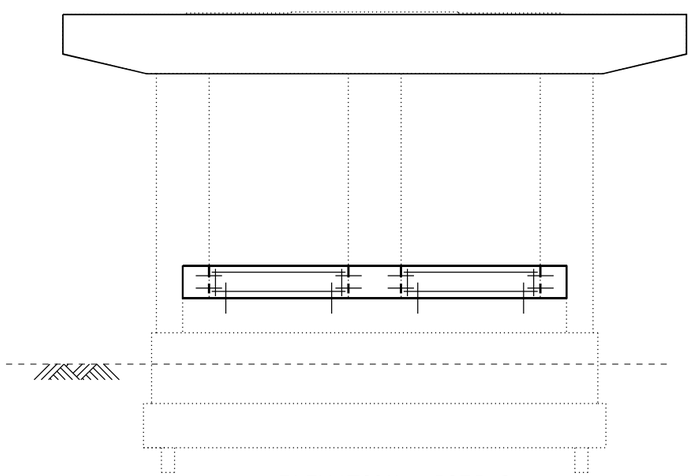

ELEVATION - PIER 2
(Looking South)

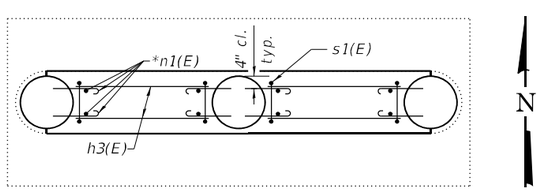

PLAN - PIER 2

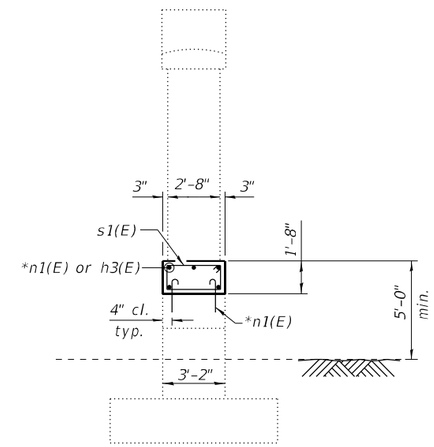

END VIEW

* Epoxy grout n(E) bars in 9" min. deep holes according to Article 584 of the Standard Specifications.

LEGEND

Structural Repair of Concrete (Depth Equal To or Less Than 5 in.)

sf Square Feet

Notes:

Repair of the existing pier shall include but may not be limited to the areas shown. The actual area to be repaired shall be determined by the Engineer at the time of construction.

Cost of epoxy grouting bars shall be included with Reinforcement Bars, Epoxy Coated.

BILL OF MATERIAL

Bar	No.	Size	Length	Shape
h3(E)	10	#5	6'-9"	
n1(E)	36	#5	2'-5"	
s1(E)	14	#5	9'-3"	
Concrete Structures			Cu. Yd.	3.2
Reinforcement Bars, Epoxy Coated			Pound	300

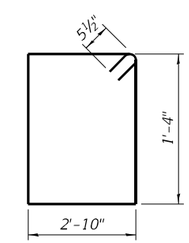

BAR s1(E)

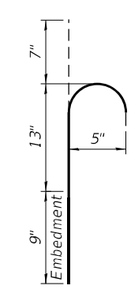

BAR n1(E)

MODEL: Default
FILE NAME: E:\1815-6\Struct\Final Design\CADD\CADD Sheets\0320065-66295-010-Pier2RepairDetails.dgn
1/9/2025 1:57:10 PM

LIN ENGINEERING,LTD. Consulting Engineers Springfield, Illinois	USER NAME =	DESIGNED - MSS	REVISED -
		CHECKED - AGJ	REVISED -
	PLOT SCALE=	DRAWN - AJF	REVISED -
	PLOT DATE = 1/9/2025	CHECKED - MTH	REVISED -

STATE OF ILLINOIS
DEPARTMENT OF TRANSPORTATION

PIER 2 REPAIR DETAILS
STRUCTURE NO. 032-0065

SHEET 10 OF 12 SHEETS

F.A.I. RTE.	SECTION	COUNTY	TOTAL SHEETS	SHEET NO.
80	(32,47-4)VB	GRUNDY/KENDALL	143	116
		CONTRACT NO. 66295		
		ILLINOIS	FED. AID PROJECT	

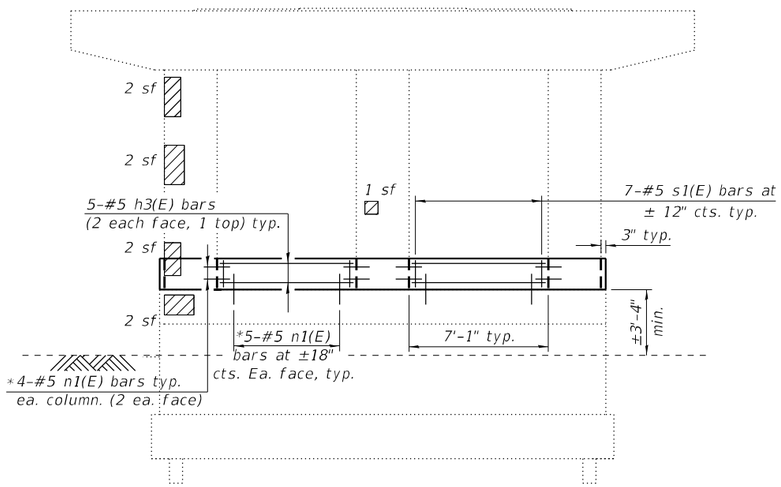

ELEVATION - PIER 3
(Looking North)

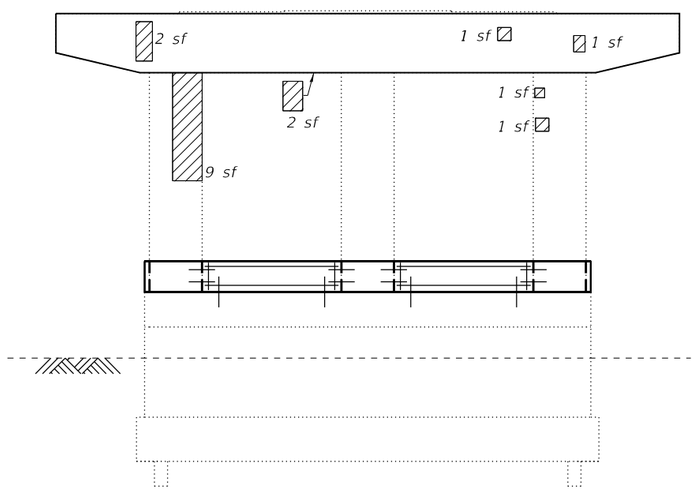

ELEVATION - PIER 3
(Looking South)

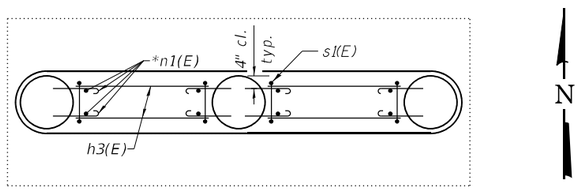

PLAN - PIER 3

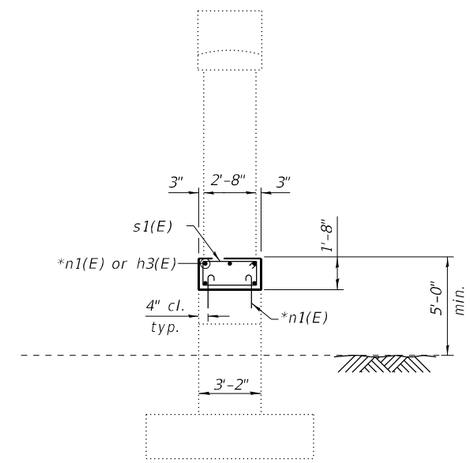

END VIEW

* Epoxy grout n(E) bars in 9" min. deep holes according to Article 584 of the Standard Specifications.

LEGEND

Structural Repair of Concrete (Depth Equal To or Less Than 5 in.)

sf Square Feet

Notes:

Repair of the existing pier shall include but may not be limited to the areas shown. The actual area to be repaired shall be determined by the Engineer at the time of construction.

Cost of epoxy grouting bars shall be included with Reinforcement Bars, Epoxy Coated.

BILL OF MATERIAL

Bar	No.	Size	Length	Shape
h3(E)	10	#5	6'-9"	
n1(E)	36	#5	2'-5"	
s1(E)	14	#5	9'-3"	
Concrete Structures			Cu. Yd.	3.4
Reinforcement Bars, Epoxy Coated			Pound	300
Structural Repair of Concrete (Depth Equal To or Less Than 5 in.)			Sq. Ft.	26

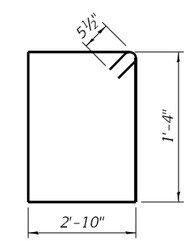

BAR s1(E)

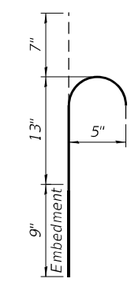

BAR n1(E)

MODEL: Default
FILE NAME: E:\1815-6\Struct\Final Design\CADD\CADD Sheets\0320065-66295-011-Pier3RepairDetails.dgn

LIN ENGINEERING,LTD. Consulting Engineers Springfield, Illinois	USER NAME =	DESIGNED - MSS	REVISED -
		CHECKED - AGJ	REVISED -
	PLOT SCALE=	DRAWN - AJF	REVISED -
	PLOT DATE = 1/9/2025	CHECKED - MTH	REVISED -

STATE OF ILLINOIS
DEPARTMENT OF TRANSPORTATION

PIER 3 REPAIR DETAILS
STRUCTURE NO. 032-0065

SHEET 11 OF 12 SHEETS

F.A.I. RTE.	SECTION	COUNTY	TOTAL SHEETS	SHEET NO.
80	(32,47-4)VB	GRUNDY/KENDALL	143	117

CONTRACT NO. 66295

ILLINOIS FED. AID PROJECT

1/9/2025 1:57:10 PM

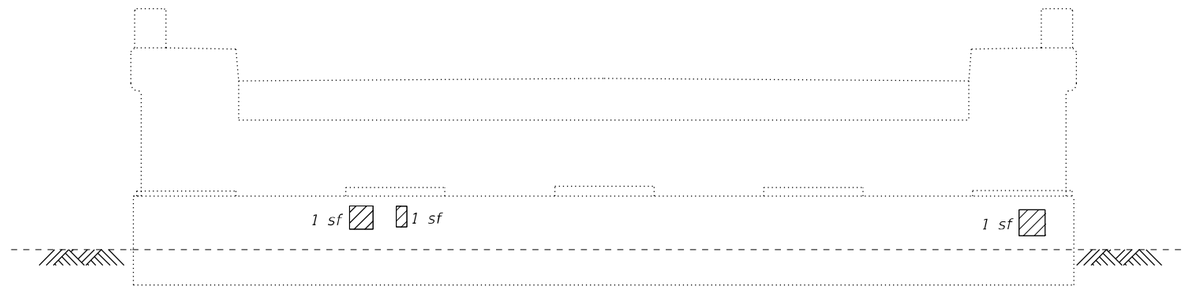

ELEVATION - NORTH ABUTMENT

(Looking North)

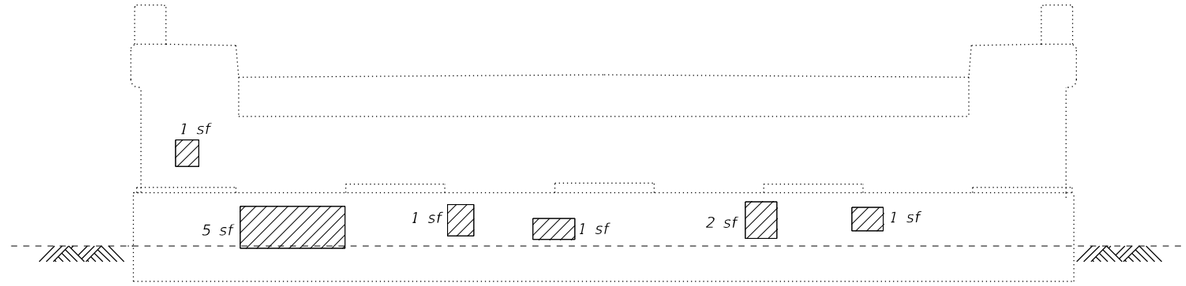

ELEVATION - SOUTH ABUTMENT

(Looking South)

Note:

Repair of the existing abutments shall include but may not be limited to the areas shown. The actual area to be repaired shall be determined by the Engineer at the time of construction.

LEGEND

Structural Repair of Concrete (Depth Equal To or Less Than 5 in.)

sf Square Feet

BILL OF MATERIAL

ITEM	UNIT	TOTAL
Structural Repair of Concrete (Depth Equal To or Less Than 5 in.)	Sq. Ft.	14

MODEL: Default
FILE NAME: E:\1815-6\Struct\Final Design\CADD\CADD Sheets\0320065-66295-012-AbutmentRepairDetails.dgn

LIN ENGINEERING,LTD.
Consulting Engineers
Springfield, Illinois

USER NAME =	DESIGNED - MSS	REVISED -	
	CHECKED - AGJ	REVISED -	
PLOT SCALE=	DRAWN - AJF	REVISED -	
PLOT DATE = 1/9/2025	CHECKED - MTH	REVISED -	

STATE OF ILLINOIS
DEPARTMENT OF TRANSPORTATION

ABUTMENT REPAIR DETAILS
STRUCTURE NO. 032-0065

SHEET 12 OF 12 SHEETS

F.A.I. RTE.	SECTION	COUNTY	TOTAL SHEETS	SHEET NO.
80	(32,47-4)VB	GRUNDY/KENDALL	143	118

CONTRACT NO. 66295

ILLINOIS FED. AID PROJECT

1/9/2025 1:57:11 PM

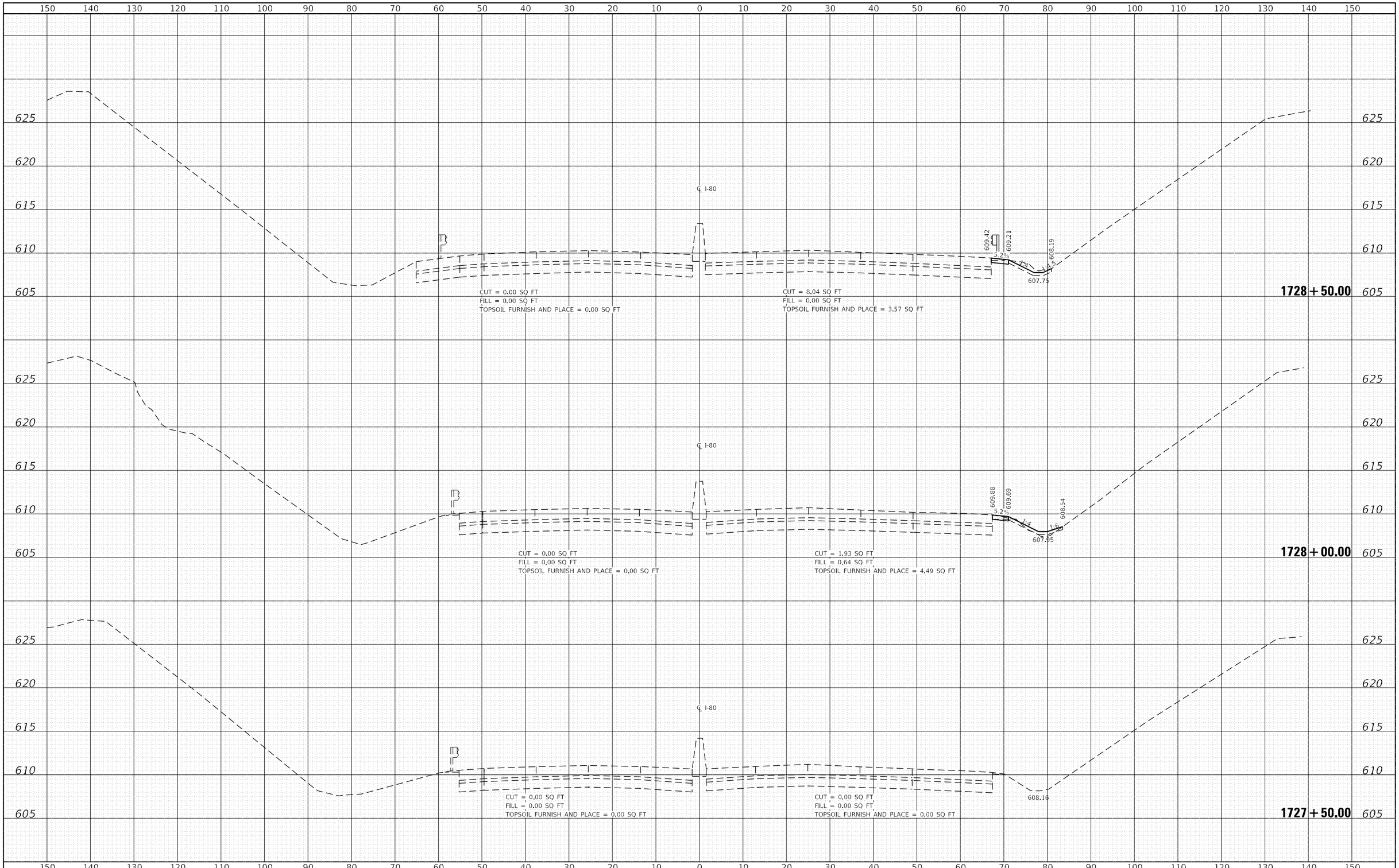

LIN ENGINEERING,LTD. Consulting Engineers Westmont, Illinois	USER NAME = 14nha	DESIGNED - RC	REVISED -	STATE OF ILLINOIS DEPARTMENT OF TRANSPORTATION	W.C. RAILROAD OVER F.A.I. ROUTE 80 I-80 CROSS SECTIONS
		DRAWN - RC	REVISED -		
	PLOT SCALE = 20.0000 ' / in.	CHECKED - ST	REVISED -		
	PLOT DATE = 1/9/2025	DATE - 1/2025	REVISED -		SCALE: 1"=10'H, 5'V | SHEET 1 OF 7 SHEETS | STA. 1727+50.00 TO STA. 1728+50.00

F.A.I. RTE.	SECTION	COUNTY	TOTAL SHEETS	SHEET NO.
80	(32, 47-4)VB, HBR-3	GRUNDY/KENDALL	143	119
		CONTRACT NO. 66295		
		ILLINOIS | FED. AID PROJECT		

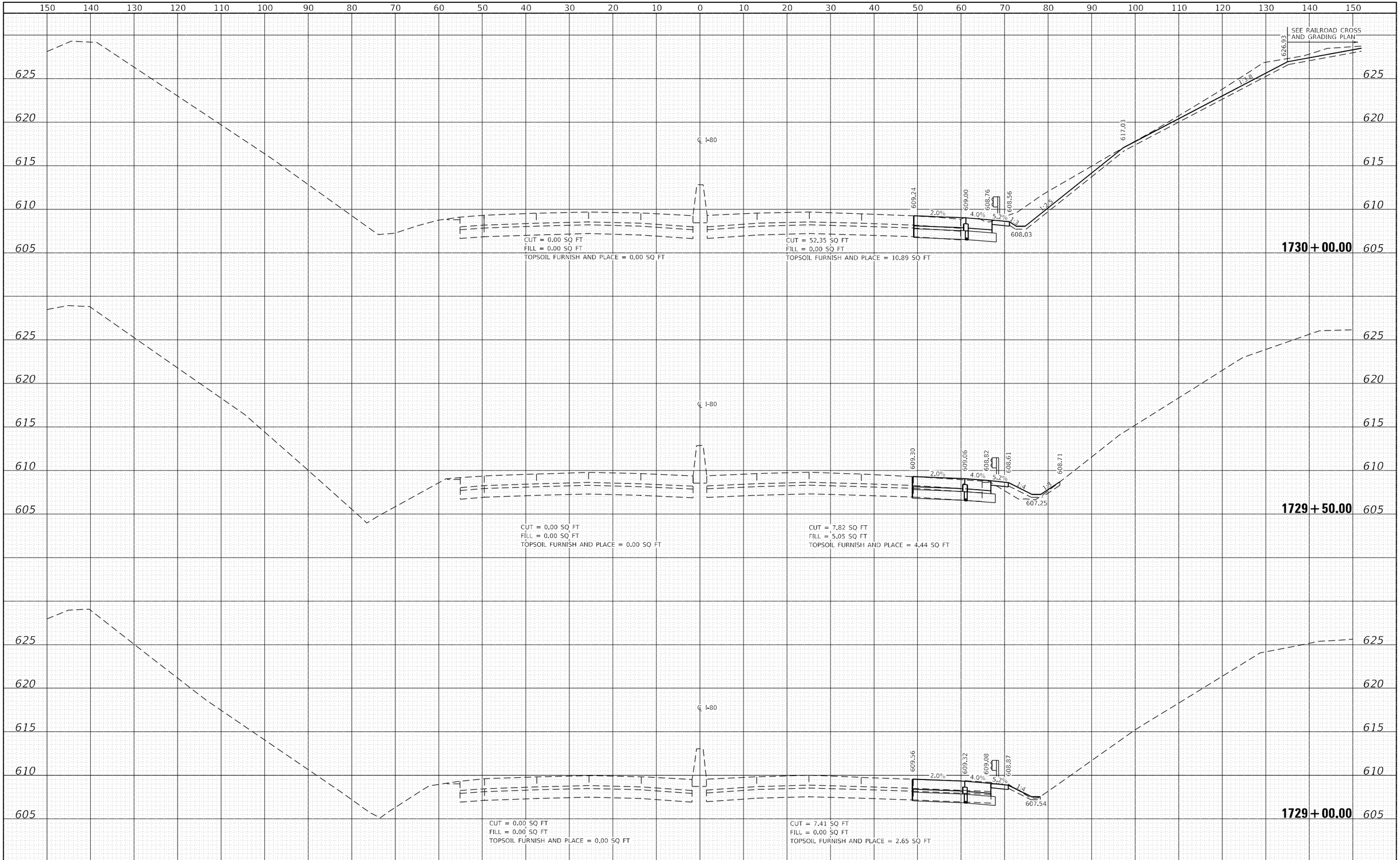

LIN ENGINEERING,LTD. Consulting Engineers Westmont, Illinois	USER NAME = 14nha	DESIGNED - RC	REVISED -
		DRAWN - RC	REVISED -
	PLOT SCALE = 20.0000 ' / in.	CHECKED - ST	REVISED -
	PLOT DATE = 1/9/2025	DATE - 1/2025	REVISED -

STATE OF ILLINOIS
DEPARTMENT OF TRANSPORTATION

W.C. RAILROAD OVER F.A.I. ROUTE 80
I-80 CROSS SECTIONS

SCALE: 1"=10'H, 5'V | SHEET 2 OF 7 SHEETS | STA. 1729+00.00 TO STA. 1730+00.00

F.A.I. RTE.	SECTION	COUNTY	TOTAL SHEETS	SHEET NO.
80	(32, 47-4)VB, HBR-3	GRUNDY/KENDALL	143	120
		CONTRACT NO. 66295		
		ILLINOIS FED. AID PROJECT		

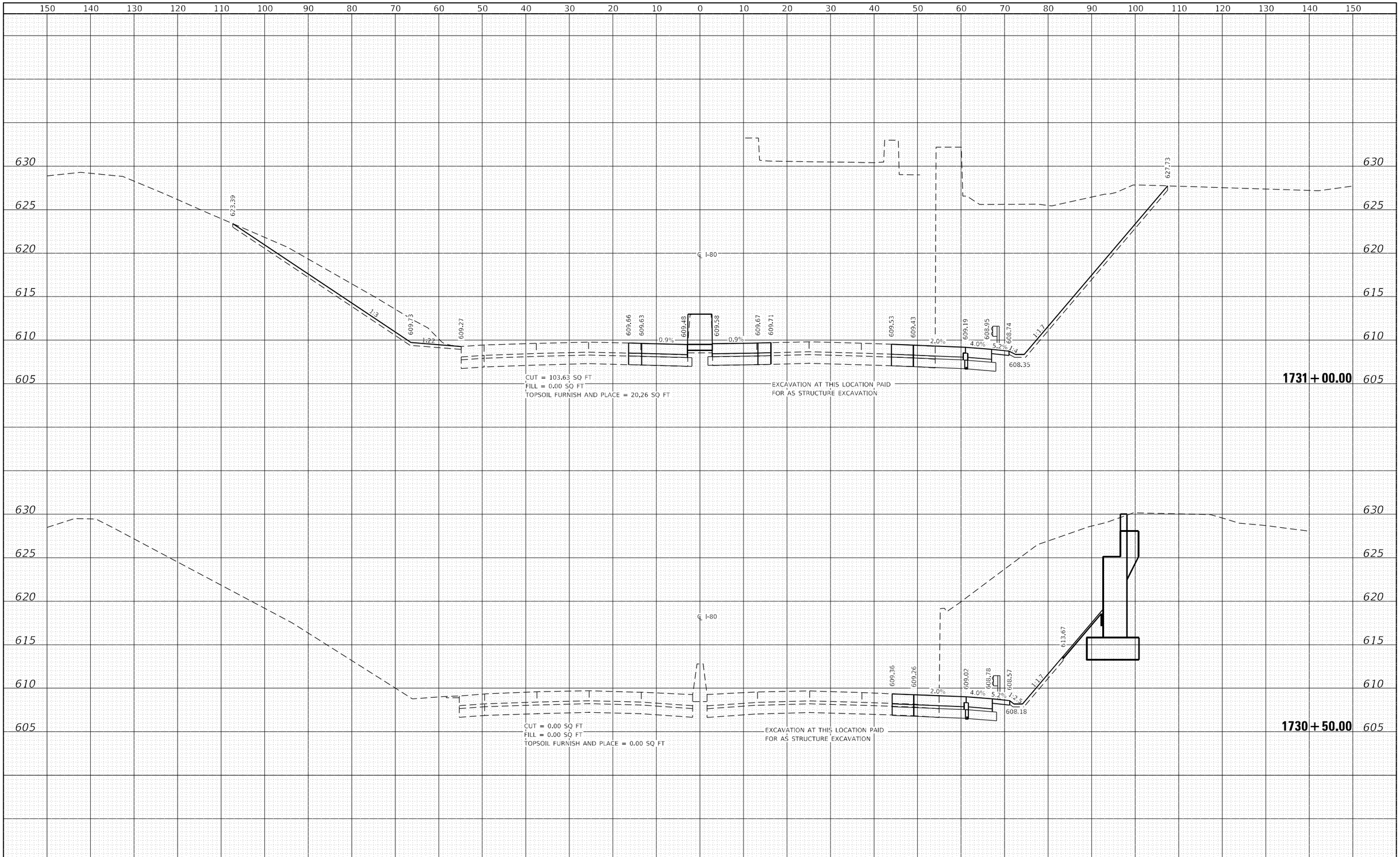

LIN ENGINEERING,LTD.
Consulting Engineers
Westmont, Illinois

USER NAME = 14nho	DESIGNED - RC	REVISED -
	DRAWN - RC	REVISED -
PLOT SCALE = 20.0000 ' / in.	CHECKED - ST	REVISED -
PLOT DATE = 1/9/2025	DATE - 1/2025	REVISED -

STATE OF ILLINOIS
DEPARTMENT OF TRANSPORTATION

W.C. RAILROAD OVER F.A.I. ROUTE 80
I-80 CROSS SECTIONS

SCALE: 1"=10'H, 5'V | SHEET 3 OF 7 SHEETS | STA. 1730+50.00 TO STA. 1731+00.00

F.A.I. RTE.	SECTION	COUNTY	TOTAL SHEETS	SHEET NO.
80	(32, 47-4)VB, HBR-3	GRUNDY/KENDALL	143	121

CONTRACT NO. 66295

ILLINOIS | FED. AID PROJECT

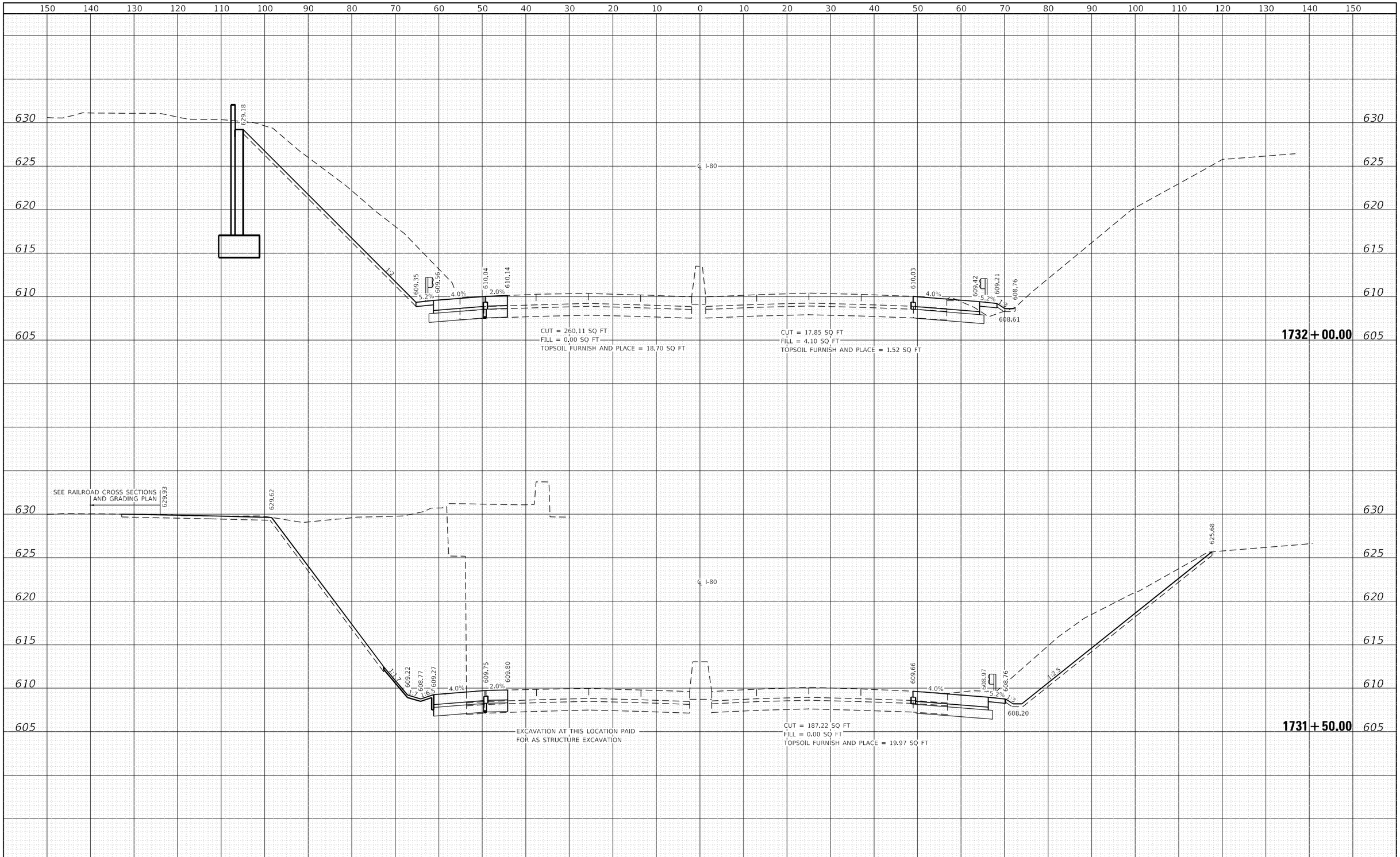

LIN ENGINEERING,LTD.
Consulting Engineers
Westmont, Illinois

USER NAME = 14nho	DESIGNED - RC	REVISED -	
	DRAWN - RC	REVISED -	
PLOT SCALE = 20.0000 ' / in.	CHECKED - ST	REVISED -	
PLOT DATE = 1/9/2025	DATE - 1/2025	REVISED -	

STATE OF ILLINOIS
DEPARTMENT OF TRANSPORTATION

W.C. RAILROAD OVER F.A.I. ROUTE 80
I-80 CROSS SECTIONS

SCALE: 1"=10'H, 5'V | SHEET 4 OF 7 SHEETS | STA. 1731+50.00 TO STA. 1732+00.00

F.A.I. RTE.	SECTION	COUNTY	TOTAL SHEETS	SHEET NO.
80	(32, 47-4)VB, HBR-3	GRUNDY/KENDALL	143	122

CONTRACT NO. 66295

ILLINOIS | FED. AID PROJECT

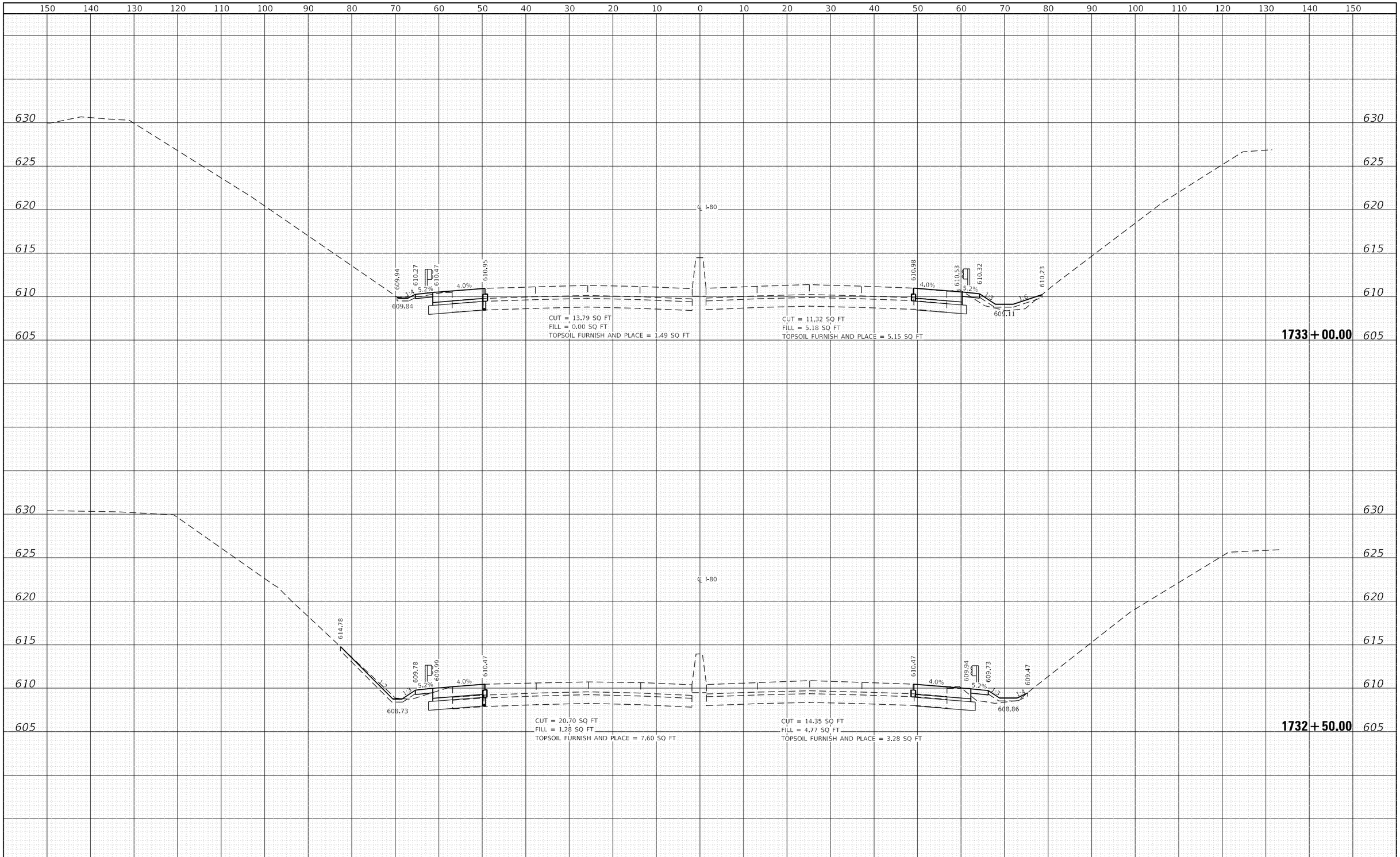

LIN ENGINEERING,LTD.
Consulting Engineers
Westmont, Illinois

USER NAME = 14nho	DESIGNED - RC	REVISED -
	DRAWN - RC	REVISED -
PLOT SCALE = 20.0000 ' / in.	CHECKED - ST	REVISED -
PLOT DATE = 1/9/2025	DATE - 1/2025	REVISED -

STATE OF ILLINOIS
DEPARTMENT OF TRANSPORTATION

W.C. RAILROAD OVER F.A.I. ROUTE 80
I-80 CROSS SECTIONS

SCALE: 1"=10'H, 5'V | SHEET 5 OF 7 SHEETS | STA. 1732+50.00 TO STA. 1733+00.00

F.A.I. RTE.	SECTION	COUNTY	TOTAL SHEETS	SHEET NO.
80	(32, 47-4)VB, HBR-3	GRUNDY/KENDALL	143	123

CONTRACT NO. 66295

ILLINOIS | FED. AID PROJECT

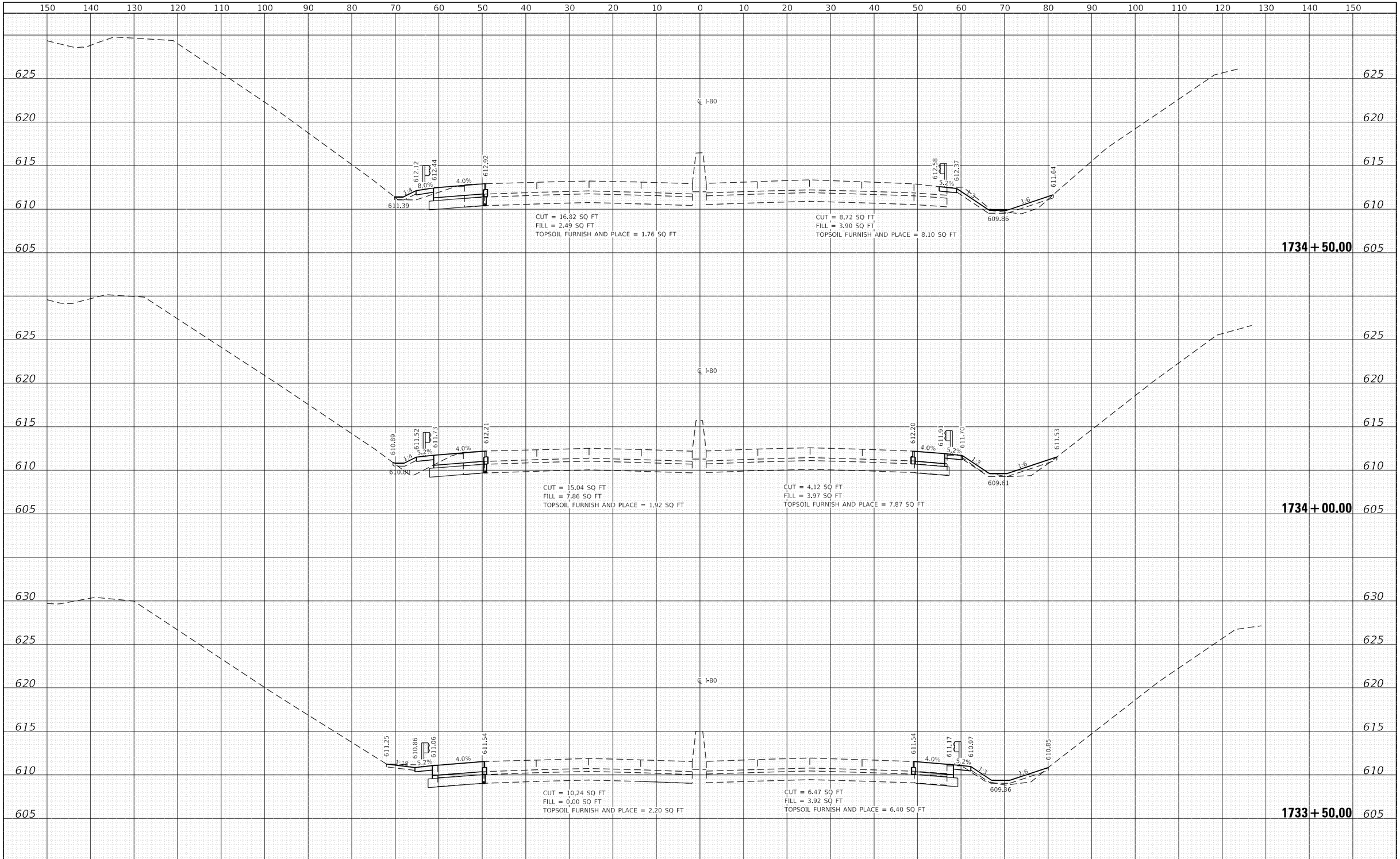

LIN ENGINEERING,LTD. Consulting Engineers Westmont, Illinois	USER NAME = 14nho	DESIGNED - RC	REVISED -
		DRAWN - RC	REVISED -
	PLOT SCALE = 20.0000 ' / in.	CHECKED - ST	REVISED -
	PLOT DATE = 1/9/2025	DATE - 1/2025	REVISED -

STATE OF ILLINOIS
DEPARTMENT OF TRANSPORTATION

W.C. RAILROAD OVER F.A.I. ROUTE 80
I-80 CROSS SECTIONS

SCALE: 1"=10'H, 5'V | SHEET 6 OF 7 SHEETS | STA. 1733+50.00 TO STA. 1734+50.00

F.A.I. RTE.	SECTION	COUNTY	TOTAL SHEETS	SHEET NO.
80	(32, 47-4)VB, HBR-3	GRUNDY/KENDALL	143	124
		CONTRACT NO. 66295		
		ILLINOIS FED. AID PROJECT		

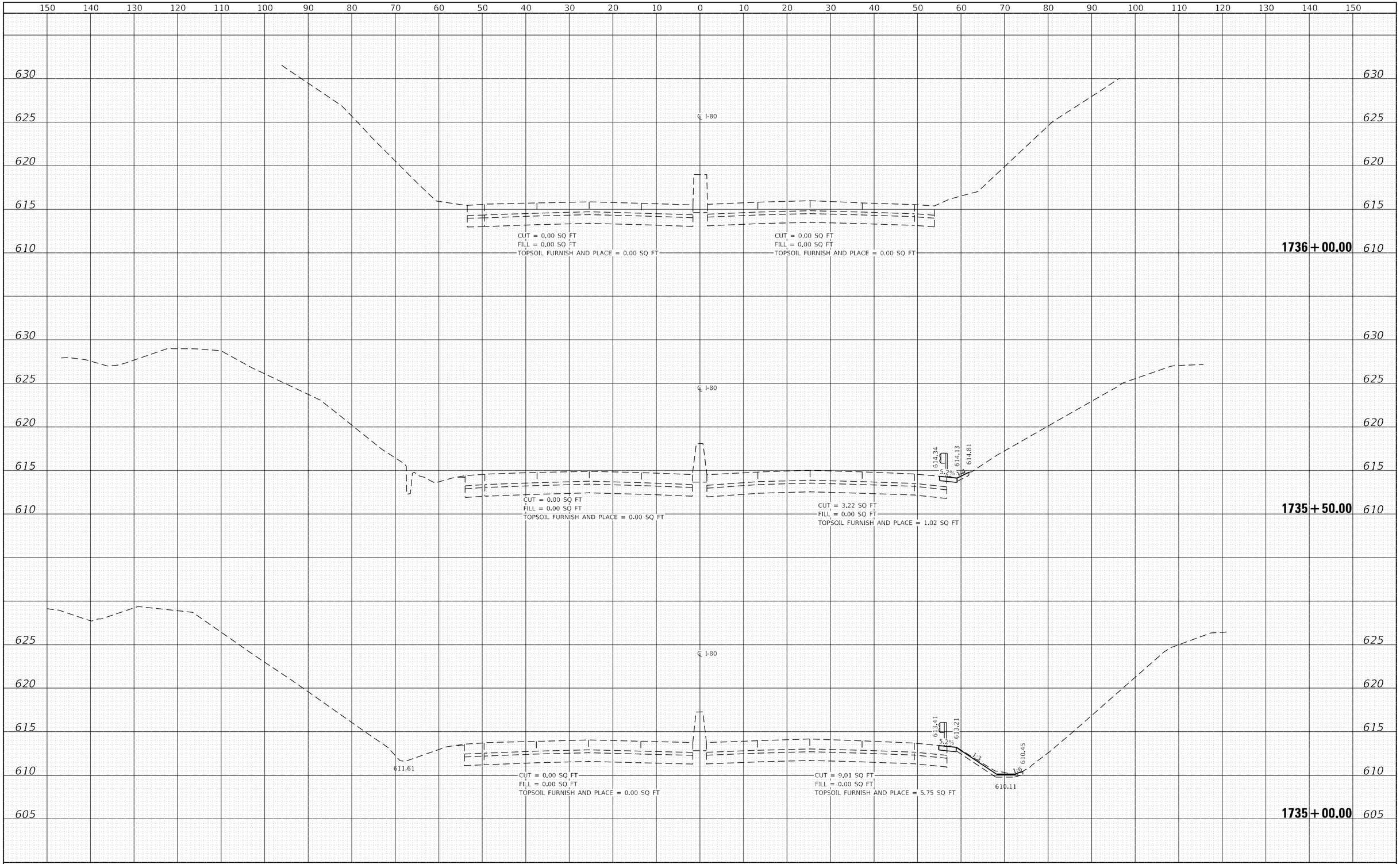

LIN ENGINEERING,LTD. Consulting Engineers Westmont, Illinois	USER NAME = 14nha	DESIGNED - RC	REVISED -	STATE OF ILLINOIS DEPARTMENT OF TRANSPORTATION	W.C. RAILROAD OVER F.A.I. ROUTE 80 I-80 CROSS SECTIONS
		DRAWN - RC	REVISED -		
	PLOT SCALE = 20.0000 ' / in.	CHECKED - ST	REVISED -		
	PLOT DATE = 1/9/2025	DATE - 1/2025	REVISED -		SCALE: 1"=10'H, 5'V SHEET 7 OF 7 SHEETS STA. 1735+00.00 TO STA. 1736+00.00

F.A.I. RTE.	SECTION	COUNTY	TOTAL SHEETS	SHEET NO.
80	(32, 47-4)VB, HBR-3	GRUNDY/KENDALL	143	125
		CONTRACT NO. 66295		
		ILLINOIS FED. AID PROJECT		

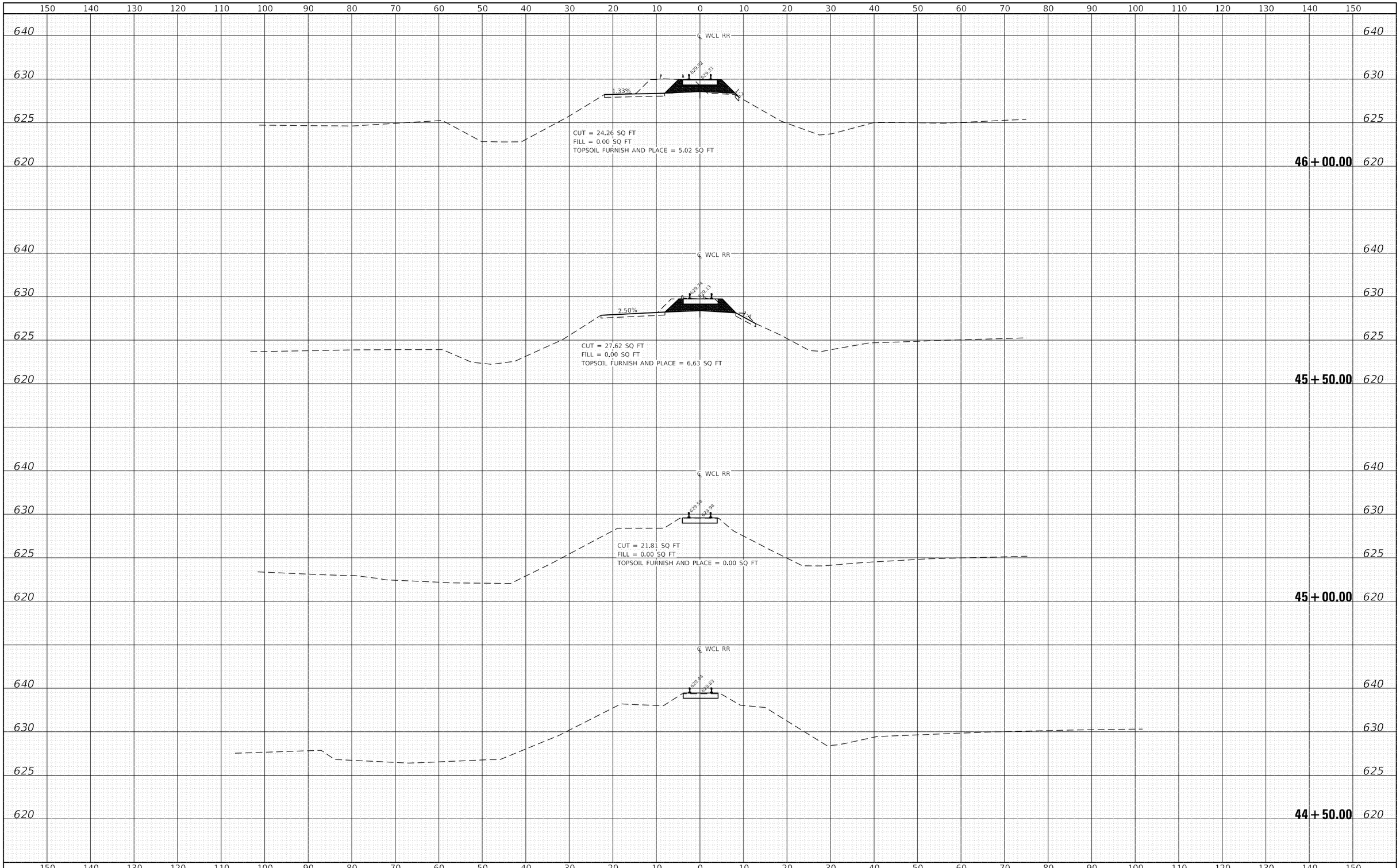

LIN ENGINEERING,LTD. Consulting Engineers Westmont, Illinois	USER NAME = 14nha	DESIGNED - RC	REVISED -
		DRAWN - RC	REVISED -
	PLOT SCALE = 20.0000 ' / in.	CHECKED - ST	REVISED -
	PLOT DATE = 1/9/2025	DATE - 1/2025	REVISED -

STATE OF ILLINOIS
DEPARTMENT OF TRANSPORTATION

W.C. RAILROAD OVER F.A.I. ROUTE 80
W.C. RAILROAD CROSS SECTIONS

SCALE: 1"=10'H, 5'V | SHEET 1 OF 8 SHEETS | STA. 44+50.00 TO STA. 46+00.00

F.A.I. RTE.	SECTION	COUNTY	TOTAL SHEETS	SHEET NO.
80	(32, 47-4)VB, HBR-3	GRUNDY/KENDALL	143	126
		CONTRACT NO. 66295		
		ILLINOIS	FED. AID PROJECT	

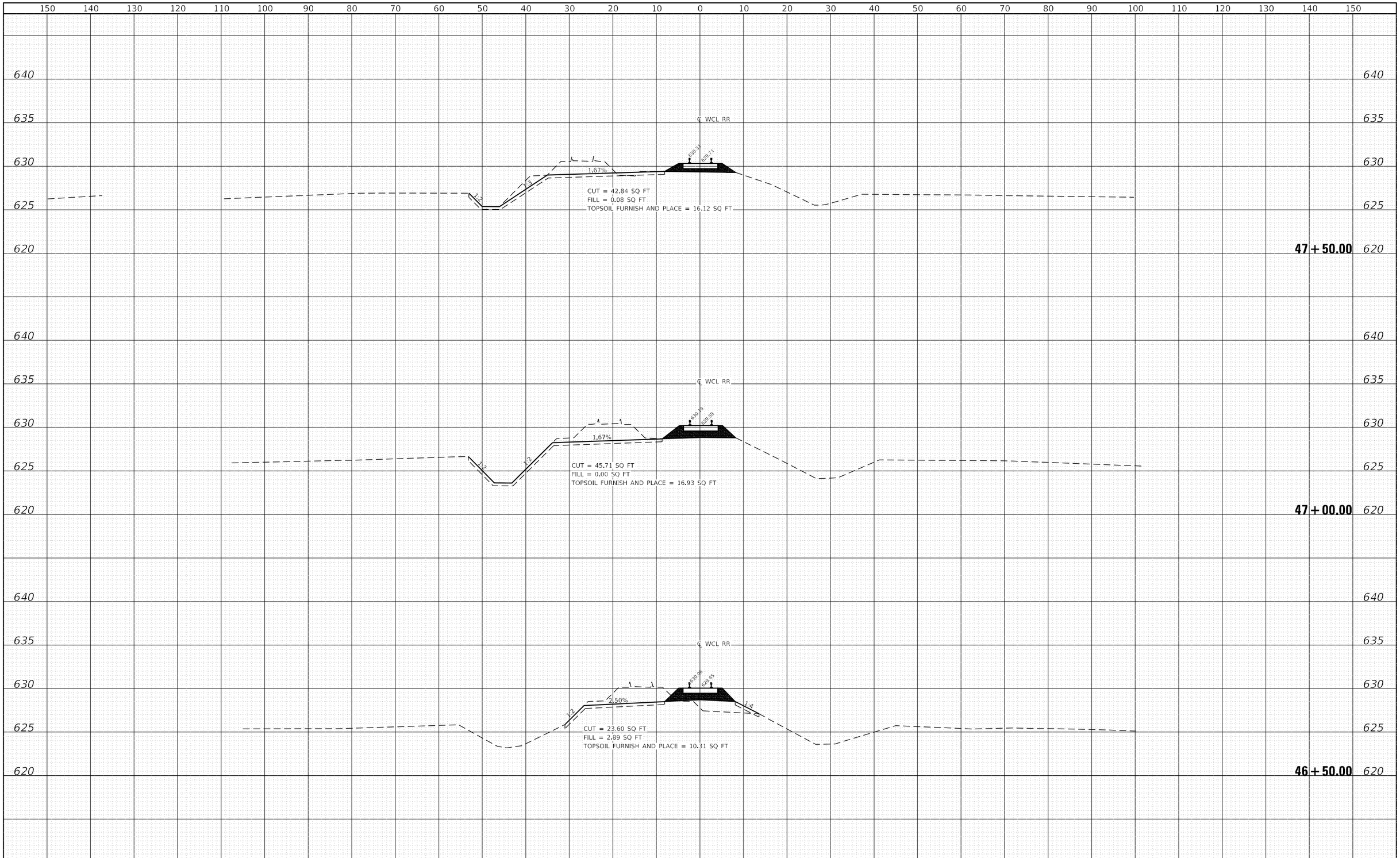

LIN ENGINEERING,LTD. Consulting Engineers Westmont, Illinois	USER NAME = 14nha	DESIGNED - RC	REVISED -	STATE OF ILLINOIS DEPARTMENT OF TRANSPORTATION	W.C. RAILROAD OVER F.A.I. ROUTE 80 W.C. RAILROAD CROSS SECTIONS	F.A.I. RTE.	SECTION	COUNTY	TOTAL SHEETS / SHEET NO.
		DRAWN - RC	REVISED -			80	(32, 47-4)VB, HBR-3	GRUNDY/KENDALL	143 / 127
	PLOT SCALE = 20.0000 ' / in.	CHECKED - ST	REVISED -					CONTRACT NO. 66295	
	PLOT DATE = 1/9/2025	DATE - 1/2025	REVISED -		SCALE: 1"=10'H, 5'V SHEET 2 OF 8 SHEETS STA. 46+50.00 TO STA. 47+50.00			ILLINOIS FED. AID PROJECT	

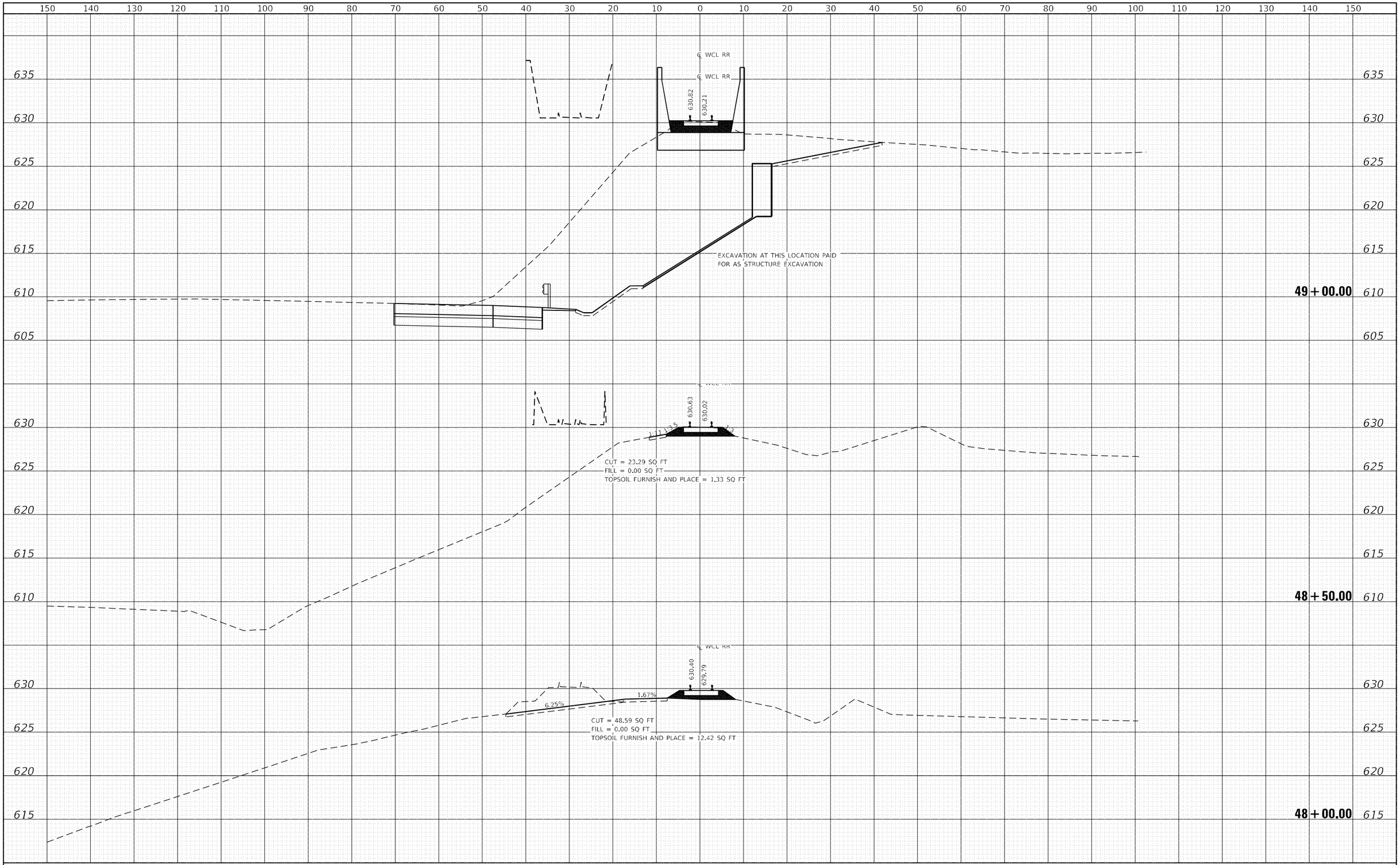

LIN ENGINEERING,LTD.
Consulting Engineers
Westmont, Illinois

USER NAME = 14nho	DESIGNED - RC	REVISED -
	DRAWN - RC	REVISED -
PLOT SCALE = 20.0000 ' / in.	CHECKED - ST	REVISED -
PLOT DATE = 1/9/2025	DATE - 1/2025	REVISED -

STATE OF ILLINOIS
DEPARTMENT OF TRANSPORTATION

W.C. RAILROAD OVER F.A.I. ROUTE 80
W.C. RAILROAD CROSS SECTIONS

SCALE: 1"=10'H, 5'V | SHEET 3 OF 8 SHEETS | STA. 48+00.00 TO STA. 49+00.00

F.A.I. RTE.	SECTION	COUNTY	TOTAL SHEETS	SHEET NO.
80	(32, 47-4)VB, HBR-3	GRUNDY/KENDALL	143	128

CONTRACT NO. 66295

ILLINOIS | FED. AID PROJECT

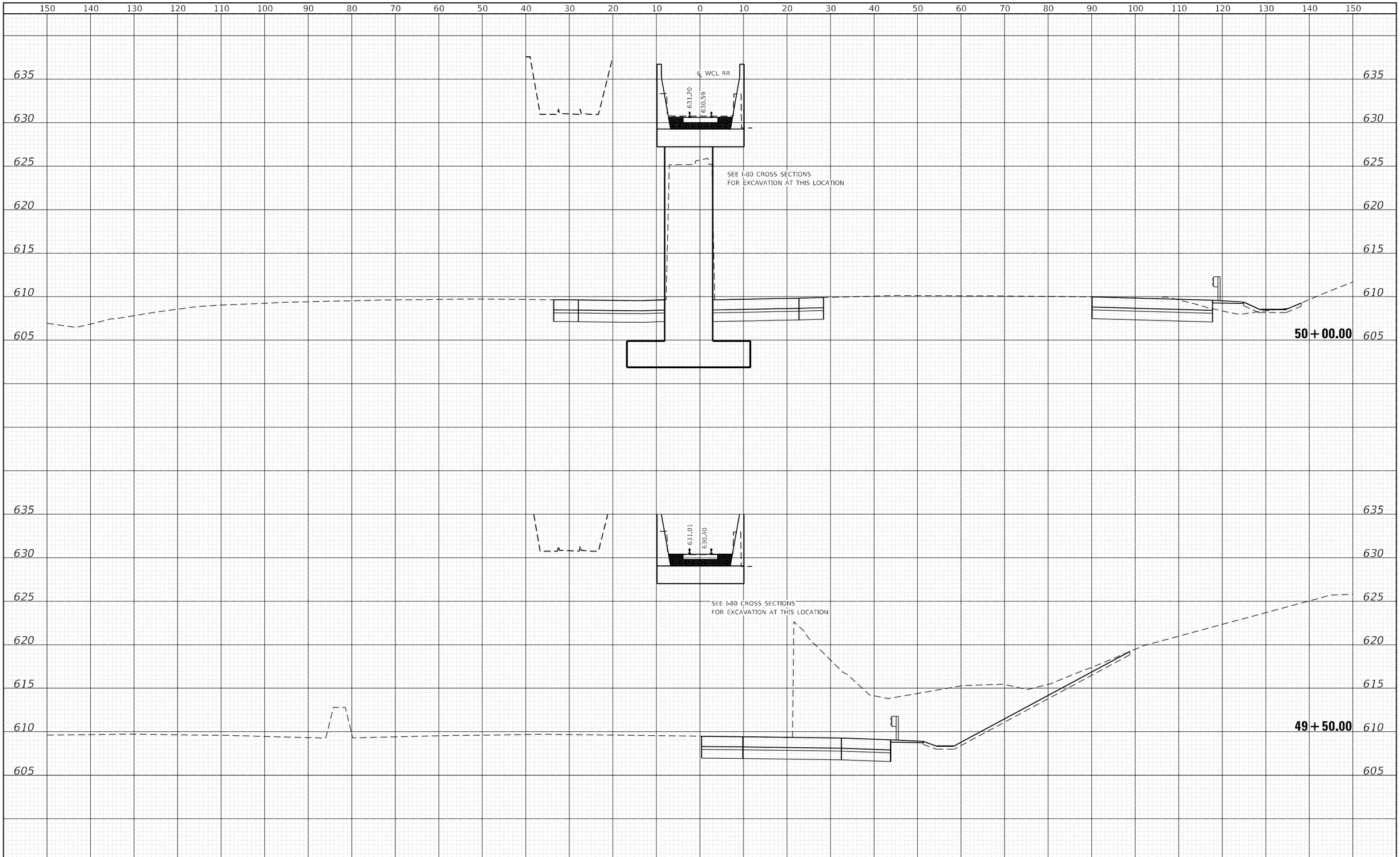

LIN ENGINEERING,LTD.
Consulting Engineers
Westmont, Illinois

USER NAME = 14nho	DESIGNED - RC	REVISED -
	DRAWN - RC	REVISED -
PLOT SCALE = 20.0000 ' / in.	CHECKED - ST	REVISED -
PLOT DATE = 1/9/2025	DATE - 1/2025	REVISED -

STATE OF ILLINOIS
DEPARTMENT OF TRANSPORTATION

W.C. RAILROAD OVER F.A.I. ROUTE 80
W.C. RAILROAD CROSS SECTIONS

SCALE: 1"=10'H, 5'V | SHEET 4 OF 8 SHEETS | STA. 49+50.00 TO STA. 50+00.00

F.A.I. RTE.	SECTION	COUNTY	TOTAL SHEETS	SHEET NO.
80	(32, 47-4)VB, HBR-3	GRUNDY/KENDALL	143	129

CONTRACT NO. 66295

ILLINOIS | FED. AID PROJECT

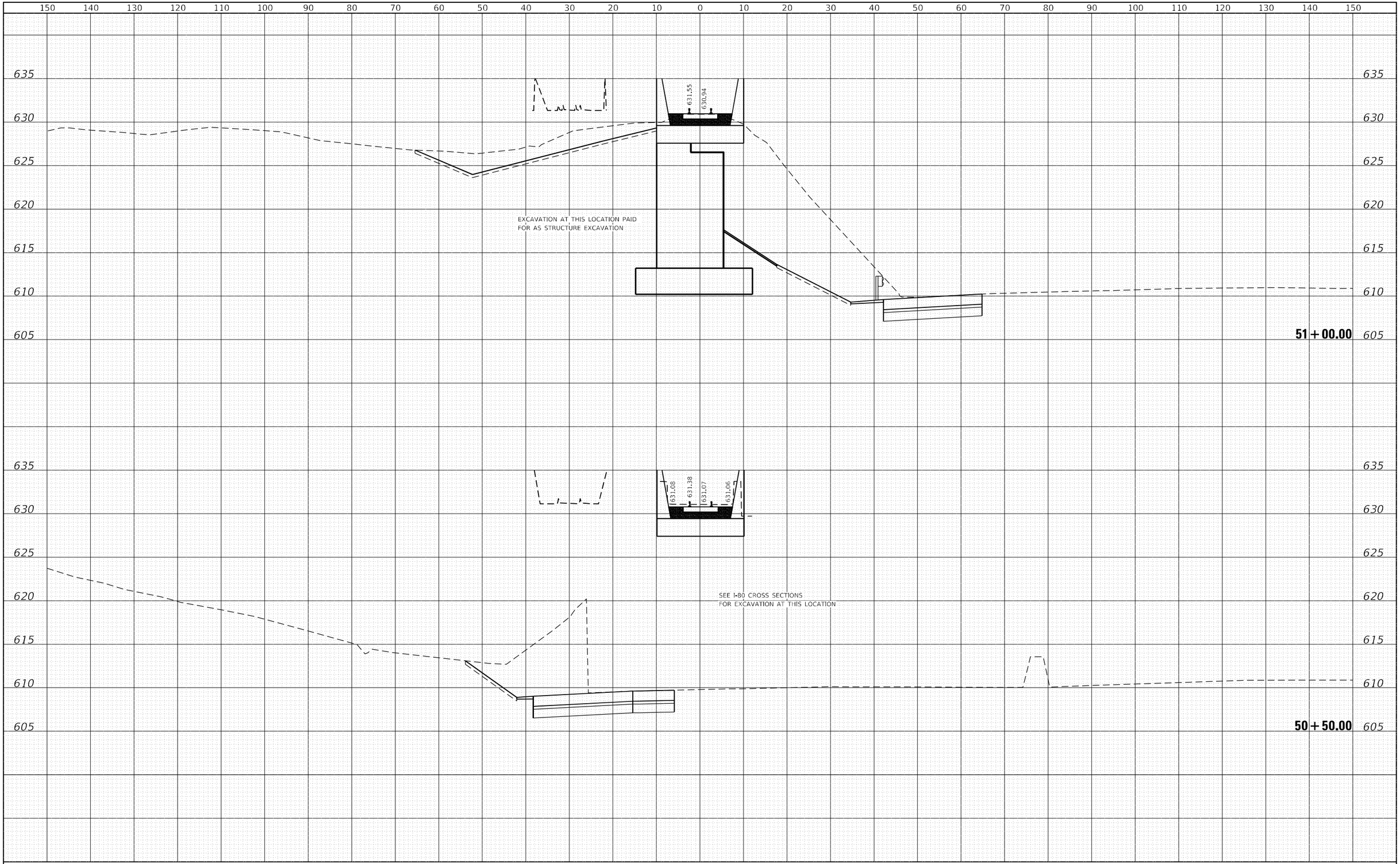

LIN ENGINEERING,LTD. Consulting Engineers Westmont, Illinois	USER NAME = 14nho	DESIGNED - RC	REVISED -	STATE OF ILLINOIS DEPARTMENT OF TRANSPORTATION
		DRAWN - RC	REVISED -	
	PLOT SCALE = 20.0000 ' / in.	CHECKED - ST	REVISED -	
	PLOT DATE = 1/9/2025	DATE - 1/2025	REVISED -	

W.C. RAILROAD OVER F.A.I. ROUTE 80
W.C. RAILROAD CROSS SECTIONS

SCALE: 1"=10'H, 5'V | SHEET 5 OF 8 SHEETS | STA. 50+50.00 TO STA. 51+00.00

F.A.I. RTE.	SECTION	COUNTY	TOTAL SHEETS	SHEET NO.
80	(32, 47-4)VB, HBR-3	GRUNDY/KENDALL	143	130
		CONTRACT NO. 66295		
		ILLINOIS FED. AID PROJECT		

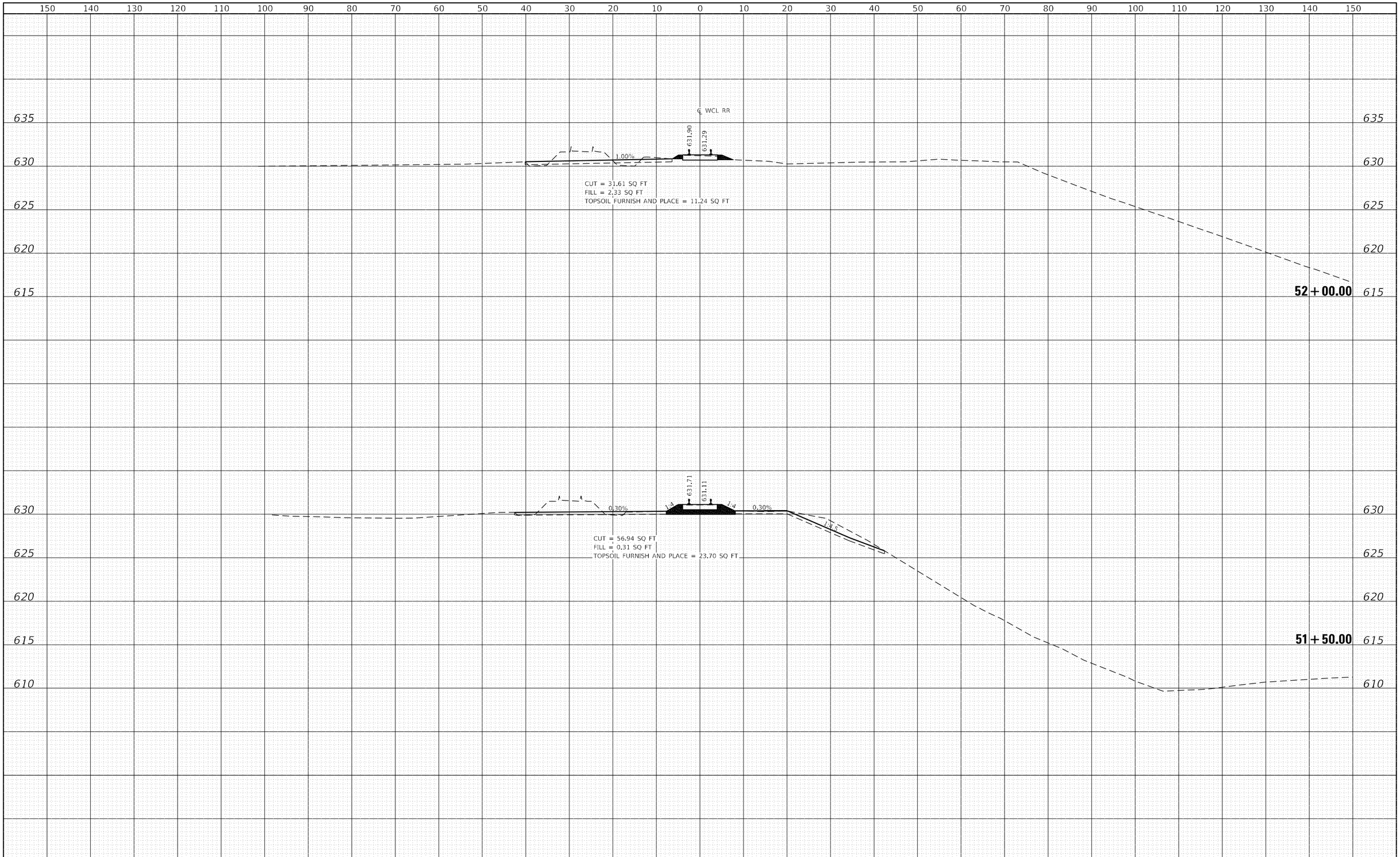

LIN ENGINEERING,LTD. Consulting Engineers Westmont, Illinois	USER NAME = 14nho	DESIGNED - RC	REVISED -
		DRAWN - RC	REVISED -
	PLOT SCALE = 20.0000 ' / in.	CHECKED - ST	REVISED -
	PLOT DATE = 1/9/2025	DATE - 1/2025	REVISED -

STATE OF ILLINOIS
DEPARTMENT OF TRANSPORTATION

W.C. RAILROAD OVER F.A.I. ROUTE 80
W.C. RAILROAD CROSS SECTIONS

SCALE: 1"=10'H, 5'V | SHEET 6 OF 8 SHEETS | STA. 51+50.00 TO STA. 52+00.00

F.A.I. RTE.	SECTION	COUNTY	TOTAL SHEETS	SHEET NO.
80	(32, 47-4)VB, HBR-3	GRUNDY/KENDALL	143	131

CONTRACT NO. 66295

ILLINOIS | FED. AID PROJECT

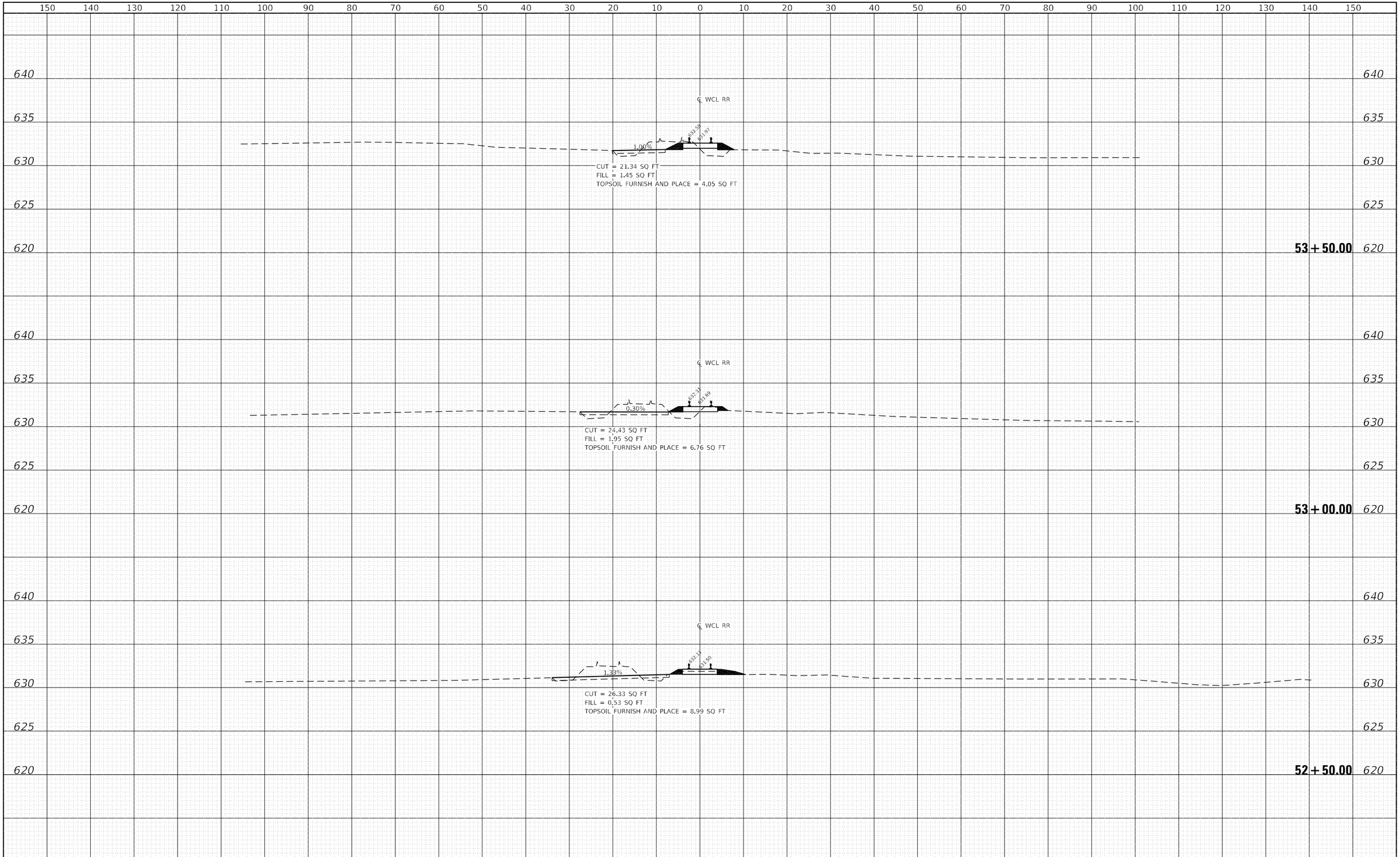

LIN ENGINEERING,LTD.
Consulting Engineers
Westmont, Illinois

USER NAME = 14nha	DESIGNED - RC	REVISED -	
	DRAWN - RC	REVISED -	
PLOT SCALE = 20.0000 ' / in.	CHECKED - ST	REVISED -	
PLOT DATE = 1/9/2025	DATE - 1/2025	REVISED -	

STATE OF ILLINOIS
DEPARTMENT OF TRANSPORTATION

W.C. RAILROAD OVER F.A.I. ROUTE 80
W.C. RAILROAD CROSS SECTIONS

SCALE: 1"=10'H, 5'V | SHEET 7 OF 8 SHEETS | STA. 52+50.00 TO STA. 53+50.00

F.A.I. RTE.	SECTION	COUNTY	TOTAL SHEETS	SHEET NO.
80	(32, 47-4)VB, HBR-3	GRUNDY/KENDALL	143	132

CONTRACT NO. 66295

ILLINOIS | FED. AID PROJECT

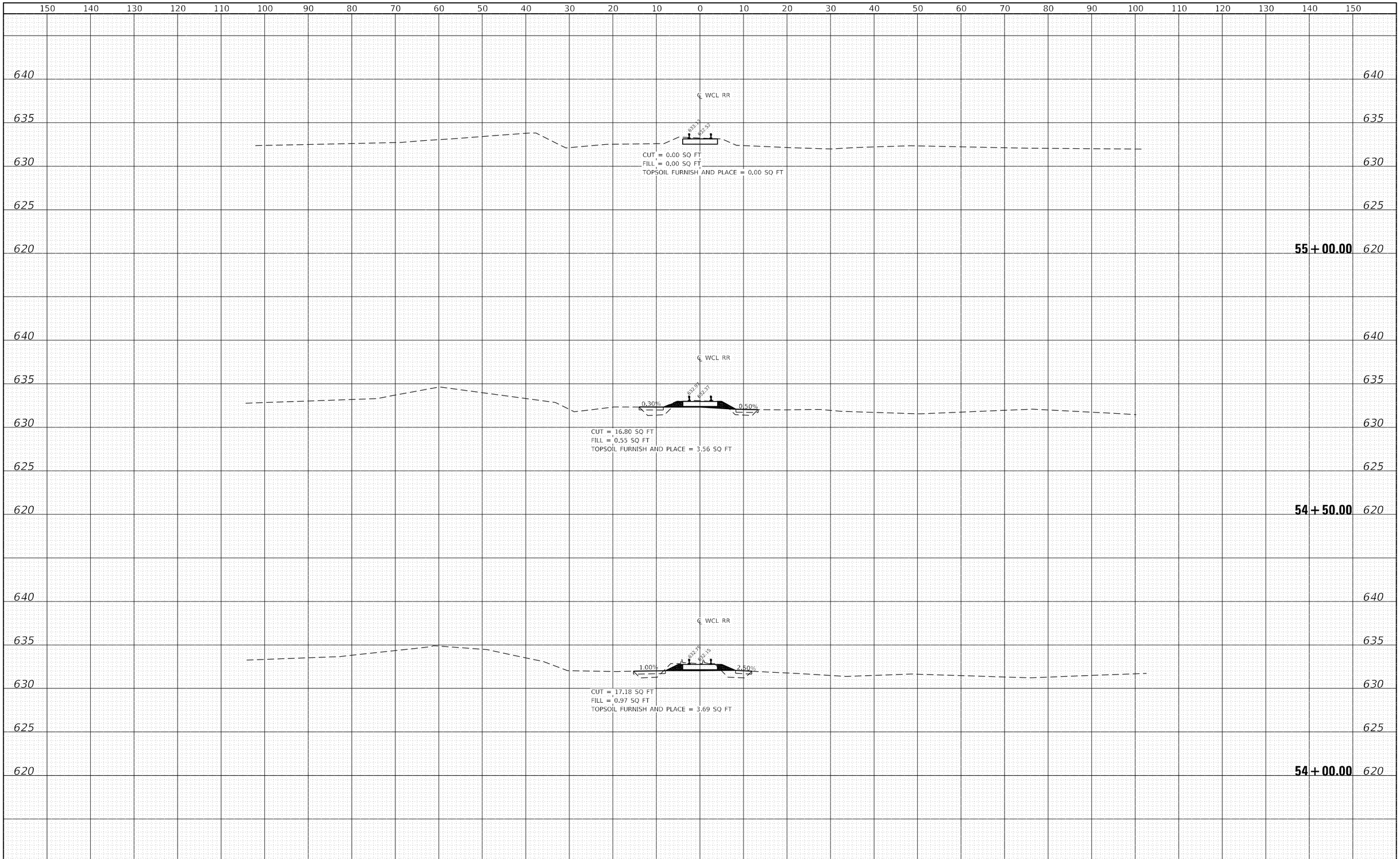

LIN ENGINEERING,LTD.
Consulting Engineers
Westmont, Illinois

USER NAME = 14nho	DESIGNED - RC	REVISED -
	DRAWN - RC	REVISED -
PLOT SCALE = 20.0000 ' / in.	CHECKED - ST	REVISED -
PLOT DATE = 1/9/2025	DATE - 1/2025	REVISED -

STATE OF ILLINOIS
DEPARTMENT OF TRANSPORTATION

W.C. RAILROAD OVER F.A.I. ROUTE 80
W.C. RAILROAD CROSS SECTIONS

SCALE: 1"=10'H, 5'V | SHEET 8 OF 8 SHEETS | STA. 54+00.00 TO STA. 55+00.00

F.A.I. RTE.	SECTION	COUNTY	TOTAL SHEETS	SHEET NO.
80	(32, 47-4)VB, HBR-3	GRUNDY/KENDALL	143	133

CONTRACT NO. 66295

ILLINOIS | FED. AID PROJECT

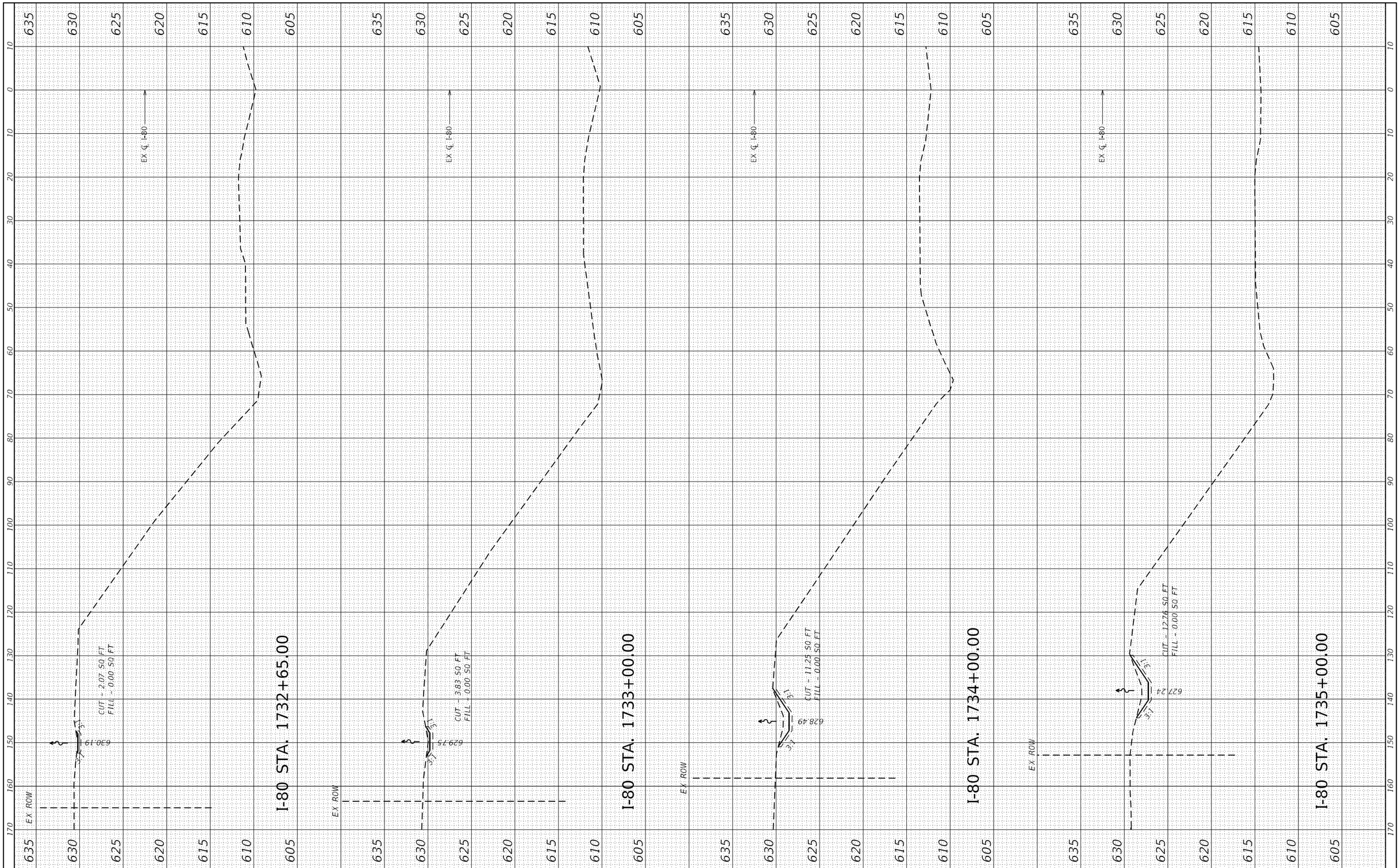

LIN ENGINEERING,LTD. Consulting Engineers Westmont, Illinois	USER NAME = LIN04-PC	DESIGNED - LM	REVISED -	STATE OF ILLINOIS DEPARTMENT OF TRANSPORTATION	PROPOSED I-80 UPPER DITCH CROSS SECTIONS SINKHOLE REPAIR & ANALYSIS
		DRAWN - LM	REVISED -		
	PLOT SCALE = 20.0000 ' / in.	CHECKED - SGL	REVISED -		
	PLOT DATE = 1/9/2025	DATE - 1/2025	REVISED -		

SCALE: 1"=10H:5V | SHEET 1 OF 6 SHEETS | STA. 1732+65 TO STA. 1735+00

F.A.I RTE.	SECTION	COUNTY	TOTAL SHEETS	SHEET NO.
80	(32, 47-4) VB, HBR-3	KENDALL	143	134

CONTRACT NO. 66295

ILLINOIS | FED. AID PROJECT

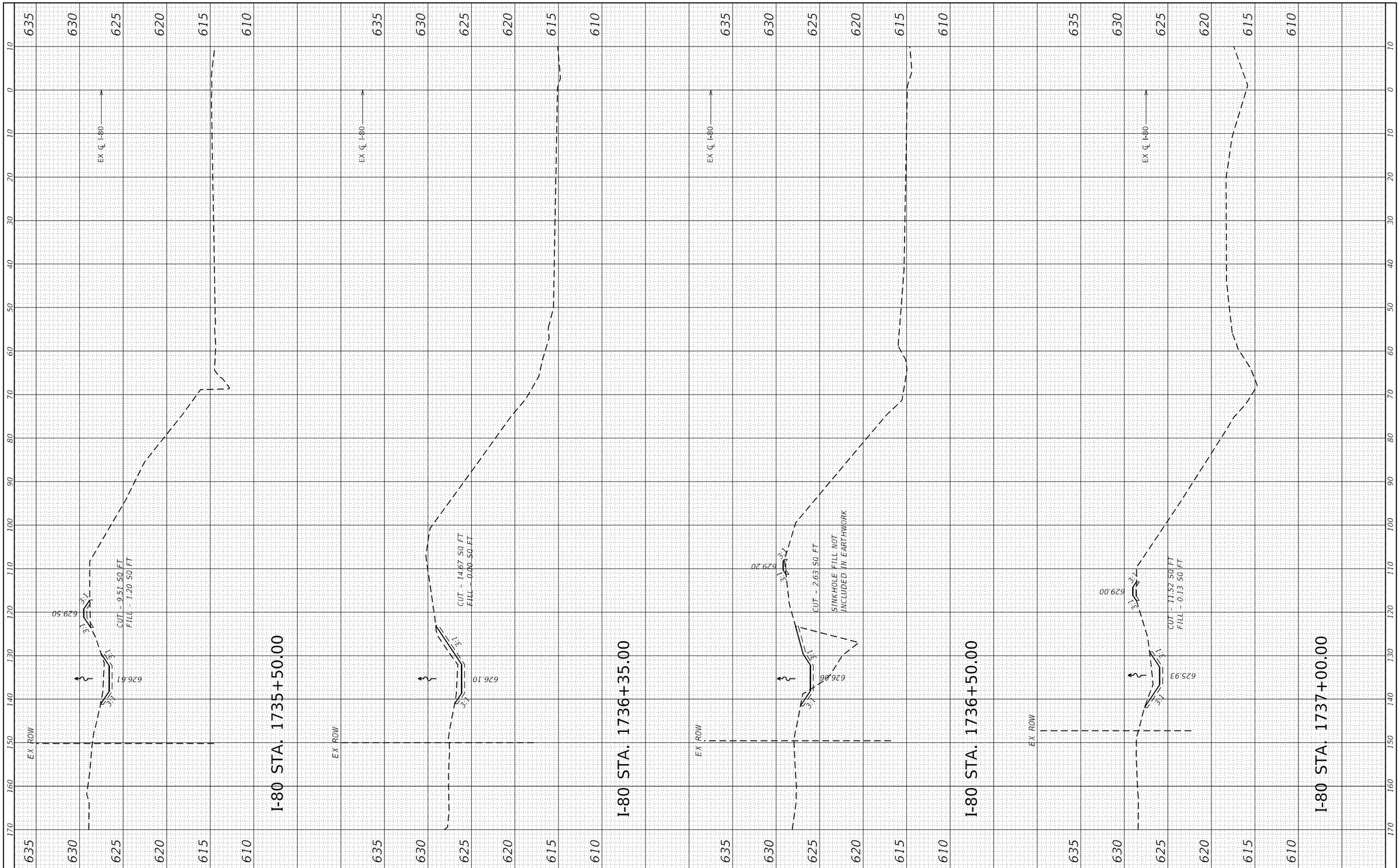

LIN ENGINEERING,LTD. Consulting Engineers Westmont, Illinois	USER NAME = LIN04-PC	DESIGNED - LM	REVISED -	STATE OF ILLINOIS DEPARTMENT OF TRANSPORTATION	PROPOSED I-80 UPPER DITCH CROSS SECTIONS SINKHOLE REPAIR & ANALYSIS
		DRAWN - LM	REVISED -		
	PLOT SCALE = 20.0000 ' / in.	CHECKED - SGL	REVISED -		
	PLOT DATE = 1/9/2025	DATE - 1/2025	REVISED -		SCALE: 1"=10H:5V · SHEET 2 OF 6 SHEETS · STA. 1735+50 TO STA. 1737+00

F.A.I RTE.	SECTION	COUNTY	TOTAL SHEETS	SHEET NO.
80	(32, 47-4) VB, HBR-3	KENDALL	143	135
		CONTRACT NO. 66295		
		ILLINOIS	FED. AID PROJECT	

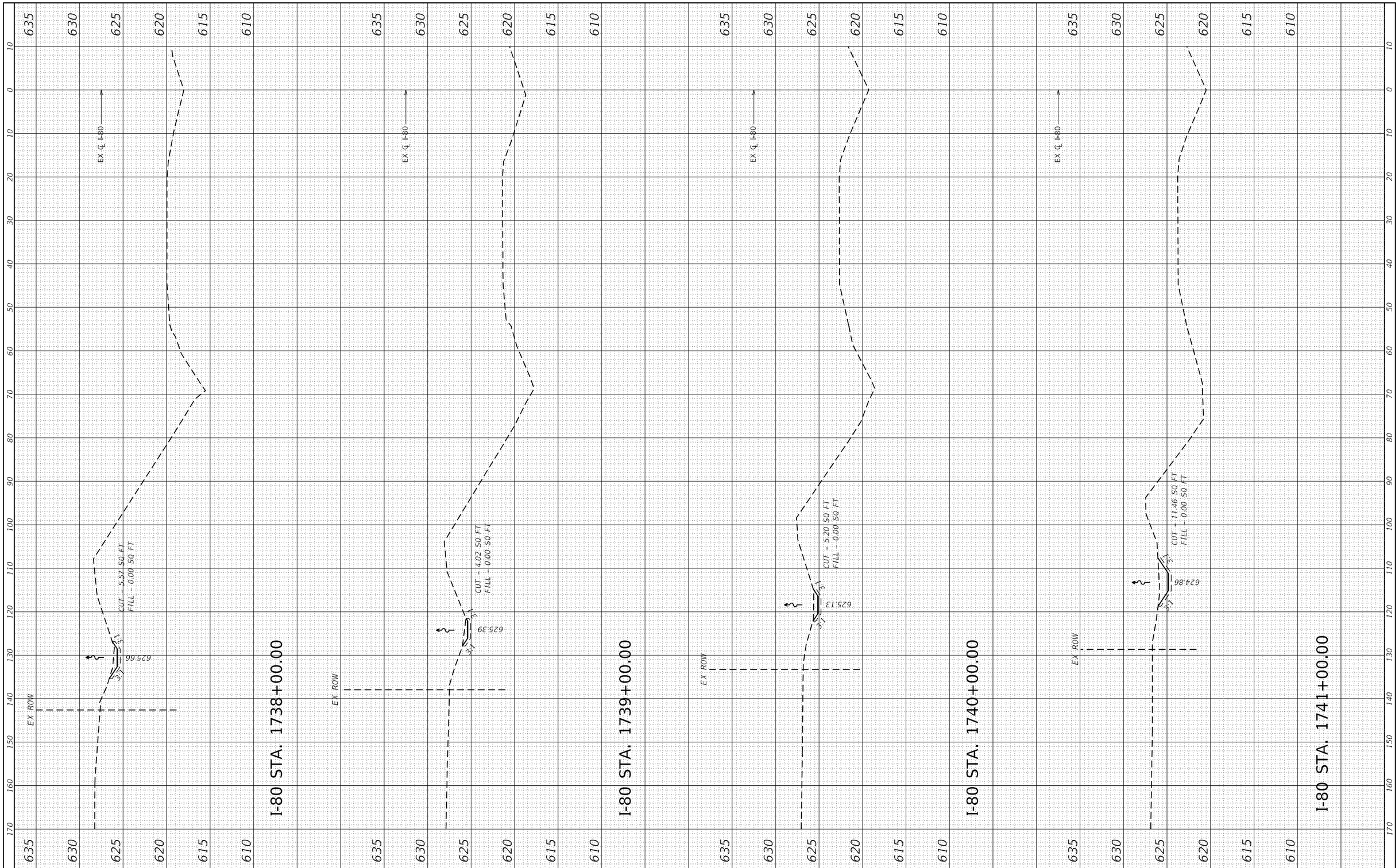

LIN ENGINEERING,LTD. Consulting Engineers Westmont, Illinois	USER NAME = LIN04-PC	DESIGNED - LM	REVISED -
		DRAWN - LM	REVISED -
	PLOT SCALE = 20.0000 ' / in.	CHECKED - SGL	REVISED -
	PLOT DATE = 1/9/2025	DATE - 1/2025	REVISED -

STATE OF ILLINOIS
DEPARTMENT OF TRANSPORTATION

PROPOSED I-80 UPPER DITCH CORSS SECTIONS
SINKHOLE REPAIR & ANALYSIS

SCALE: 1"=10H:5V | SHEET 3 OF 6 SHEETS | STA. 1738+00 TO STA. 1741+00

F.A.I RTE.	SECTION	COUNTY	TOTAL SHEETS	SHEET NO.
80	(32, 47-4) VB, HBR-3	KENDALL	143	136
		CONTRACT NO. 66295		
		ILLINOIS FED. AID PROJECT		

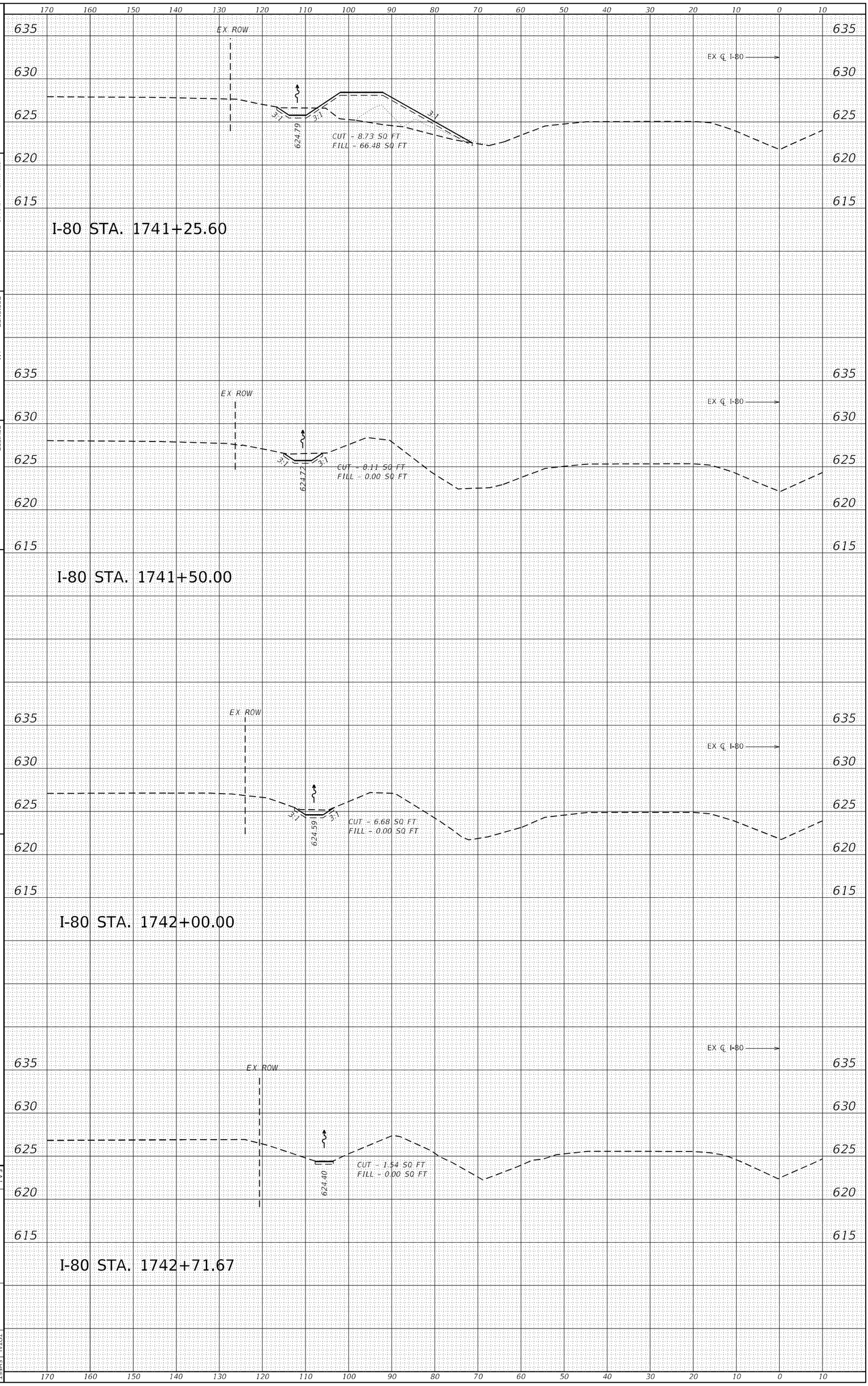

LIN ENGINEERING,LTD.
Consulting Engineers
Westmont, Illinois

USER NAME = LINUI-PC
PLOT SCALE = 20.0000 ' / in.
PLOT DATE = 1/9/2025

DESIGNED -	LJM	REVISED -
DRAWN -	LJM	REVISED -
CHECKED -	SGL	REVISED -
DATE -	1/2025	REVISED -

STATE OF ILLINOIS
DEPARTMENT OF TRANSPORTATION

PROPOSED I-80 UPPER DITCH CROSS SECTIONS
SINKHOLE REPAIR & ANALYSIS

SCALE: 1"=10H:5V | SHEET 4 OF 6 SHEETS | STA. 1741+25.60 TO STA. 1742+71.67

F.A.I. RTE.	SECTION	COUNTY	TOTAL SHEETS	SHEET NO.
80	(32, 47-4) V8, HBR-3	KENDALL	143	137

ILLINOIS FED. AID PROJECT | CONTRACT NO. 66295

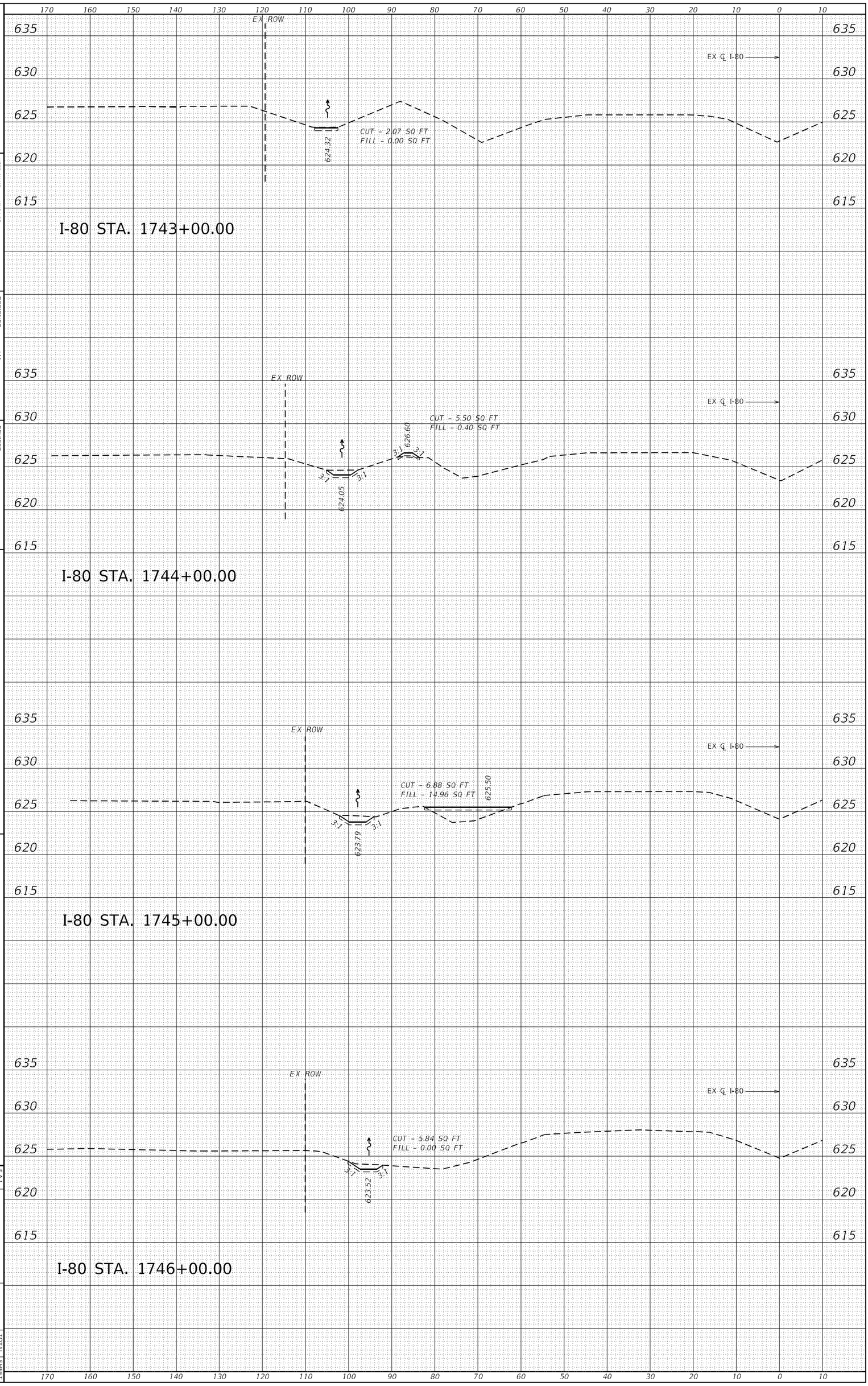

LIN ENGINEERING, LTD.
Consulting Engineers
Westmont, Illinois

USER NAME = LINJA-PC
PLOT SCALE = 20.0000 ' / in.
PLOT DATE = 1/9/2025

DESIGNED	-	LJM	REVISED -
DRAWN	-	LJM	REVISED -
CHECKED	-	SGL	REVISED -
DATE	-	11/2023	REVISED -

STATE OF ILLINOIS
DEPARTMENT OF TRANSPORTATION

PROPOSED I-80 UPPER DITCH CROSS SECTIONS
SINKHOLE REPAIR & ANALYSIS

SCALE: 1"=10H:5V | SHEET 5 OF 6 SHEETS | STA. 1743+00 TO STA. 1746+00

F.A.I. RTE.	SECTION	COUNTY	TOTAL SHEETS	SHEET NO.
80	(32, 47-4) V8, HBR-3	KENDALL	143	138

ILLINOIS FED. AID PROJECT

CONTRACT NO. 66295

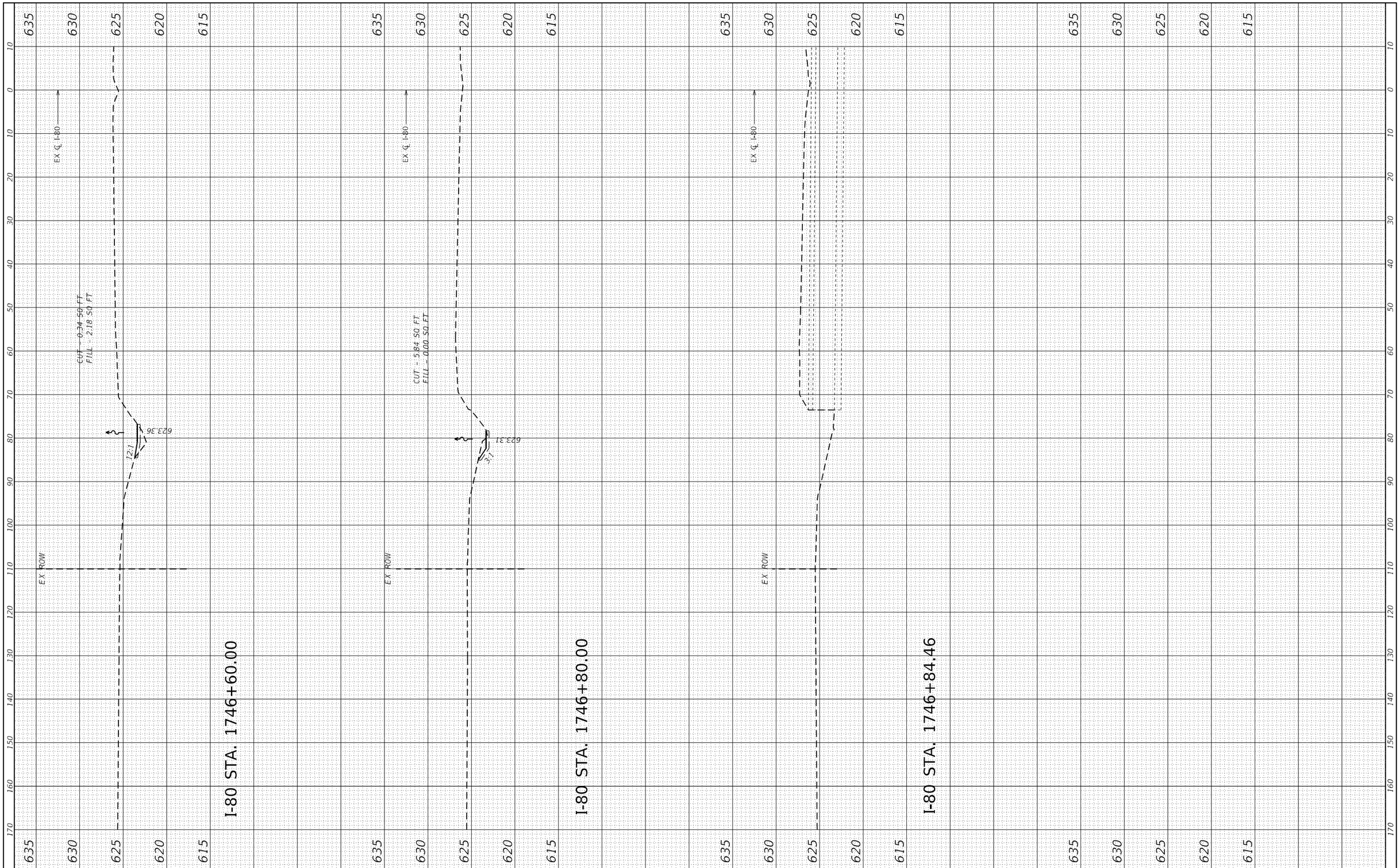

LIN ENGINEERING,LTD. Consulting Engineers Westmont, Illinois	USER NAME = LIN04-PC	DESIGNED - LM	REVISED -
		DRAWN - LM	REVISED -
	PLOT SCALE = 20.0000 ' / in.	CHECKED - SGL	REVISED -
	PLOT DATE = 1/9/2025	DATE - 11/2023	REVISED -

STATE OF ILLINOIS
DEPARTMENT OF TRANSPORTATION

PROPOSED I-80 UPPER DITCH CROSS SECTIONS
SINKHOLE REPAIR & ANALYSIS

SCALE: 1"=10H:5V | SHEET 6 OF 6 SHEETS | STA. 1746+60 TO STA. 1746+84.46

F.A.I RTE.	SECTION	COUNTY	TOTAL SHEETS	SHEET NO.
80	(32, 47-4) VB, HBR-3	KENDALL	143	139

CONTRACT NO. 66295

ILLINOIS | FED. AID PROJECT

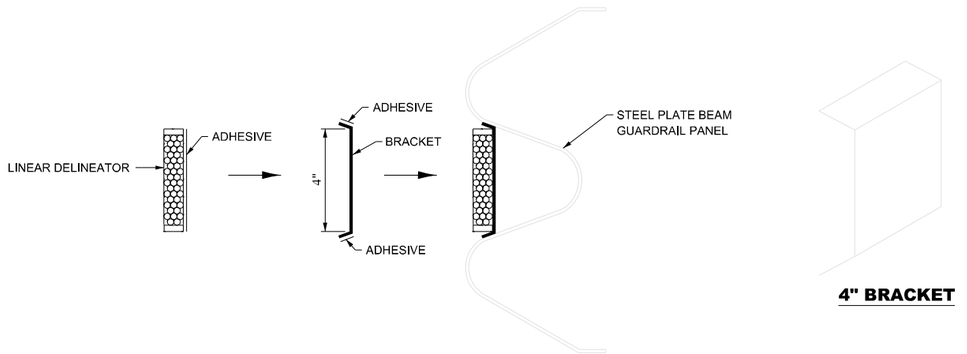

LINEAR DELINEATOR APPLICATION TO STANDARD GALVANIZED GUARDRAIL

LINEATOR DELINEATOR SHALL BE APLLIED ACCORDING TO THE MANUFACTURER'S RECOMMENDATIONS

782-5

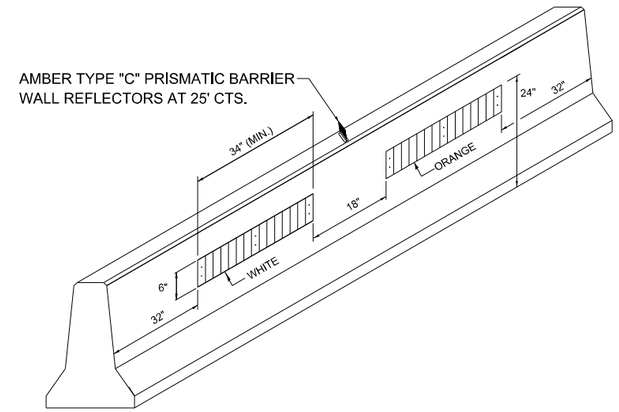

LINEAR DELINEATOR PANELS FOR TEMPORARY CONCRETE BARRIER

782-6

LIN ENGINEERING,LTD. Consulting Engineers Westmont, Illinois	USER NAME = 14nho	DESIGNED - RC	REVISED -	STATE OF ILLINOIS DEPARTMENT OF TRANSPORTATION	W.C. RAILROAD OVER F.A.I. ROUTE 80 DISTRICT 3 DETAILS	F.A.I. RTE.	SECTION	COUNTY	TOTAL SHEETS	SHEET NO.
		DRAWN - RC	REVISED -			80	(32, 47-4)VB, HBR-3	GRUNDY/KENDALL	143	140
	PLOT SCALE = 100.0000 ' / in.	CHECKED - ST	REVISED -					CONTRACT NO. 66295		
	PLOT DATE = 1/9/2025	DATE - 1/2025	REVISED -		SCALE: N.T.S. SHEET 1 OF 4 SHEETS STA. TO STA.		ILLINOIS	FED. AID PROJECT		

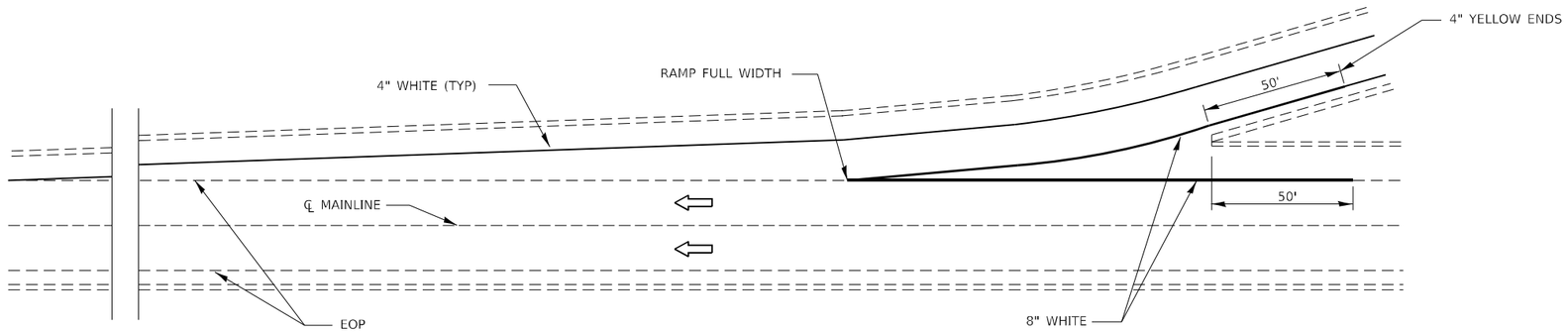

TYPICAL PAVEMENT MARKING FOR ENTRANCE RAMP TERMINALS

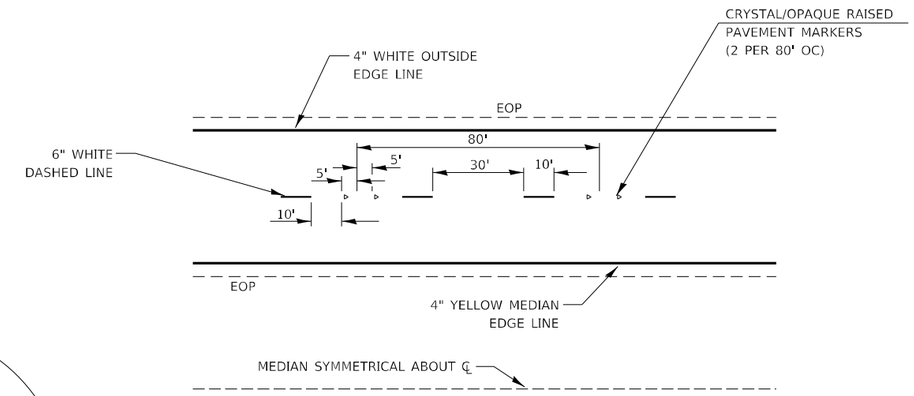

TYPICAL PAVEMENT MARKINGS

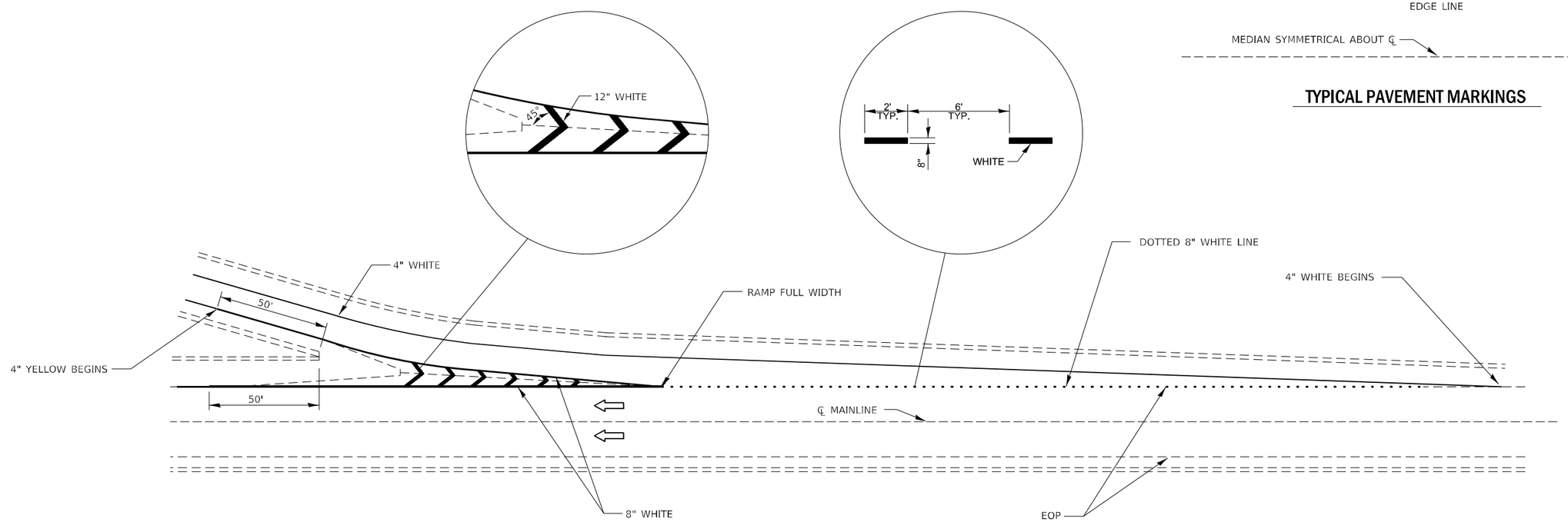

TYPICAL PAVEMENT MARKINGS FOR EXIT RAMP TERMINALS

780-12

LIN ENGINEERING,LTD. Consulting Engineers Westmont, Illinois	USER NAME = 14nho	DESIGNED - RC	REVISED -	STATE OF ILLINOIS DEPARTMENT OF TRANSPORTATION	W.C. RAILROAD OVER F.A.I. ROUTE 80 DISTRICT 3 DETAILS	F.A.I. RTE.	SECTION	COUNTY	TOTAL SHEETS	SHEET NO.
		DRAWN - RC	REVISED -			80	(32, 47-4)VB, HBR-3	GRUNDY/KENDALL	143	141
	PLOT SCALE = 100.0000 ' / in.	CHECKED - ST	REVISED -					CONTRACT NO. 66295		
	PLOT DATE = 1/9/2025	DATE - 1/2025	REVISED -		SCALE: N.T.S. SHEET 2 OF 4 SHEETS STA. TO STA.		ILLINOIS	FED. AID PROJECT		

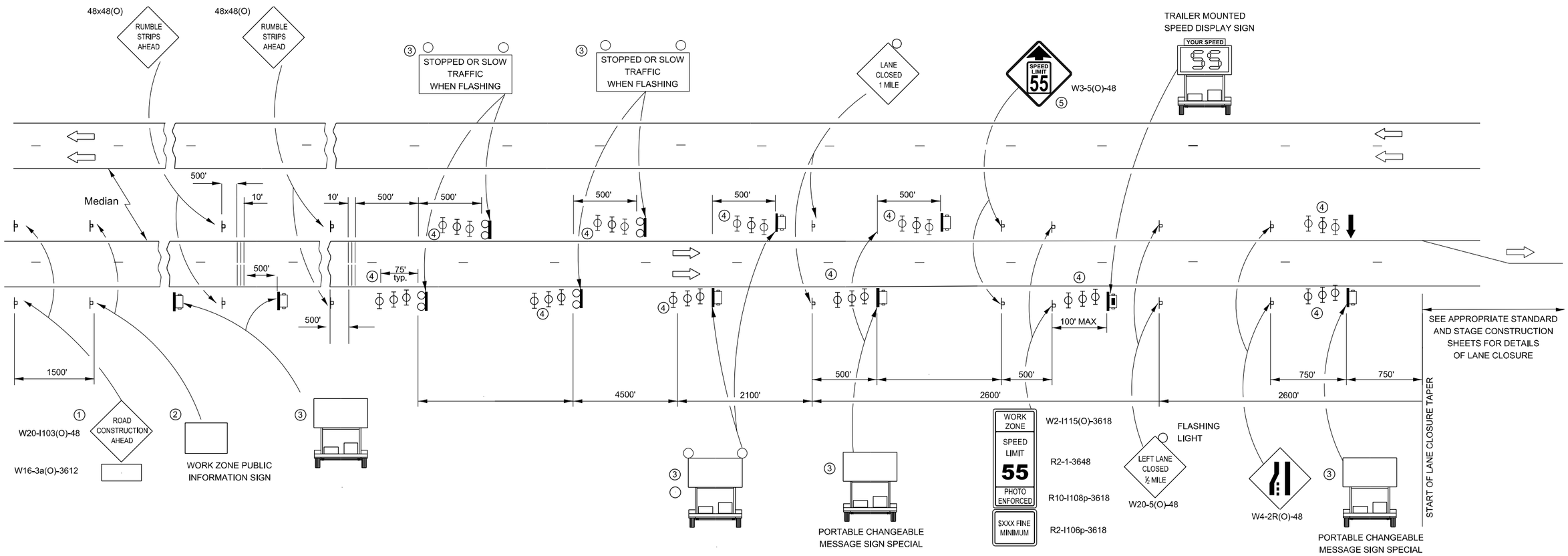

NOTES:

1. THE ROAD CONSTRUCTION AHEAD SIGN SHALL BE LOCATED 5 MILES IN ADVANCE OF THE PROJECT LIMITS.
2. THE MESSAGE AND SIZE OF THE WORK ZONE PUBLIC INFORMATION SIGN SHALL BE AS SPECIFIED BY THE DEPARTMENT.
3. UNIT TO BE PAID FOR SEPARATELY. TO BE PLACED OUTSIDE OF EXISTING PAVED SHOULDER. ANY REQUIRED EARTHWORK INCLUDED IN THE COST OF THE UNIT.
4. THREE, TYPE II BARRICADES, DRUMS, OR VERTICAL BARRICADES AT 25' CENTERS.
5. THIS SIGN SHALL ONLY BE USED IF THE EXISTING SPEED LIMIT IS GREATHER THAN 65 MPH.
6. WHEN SHOWN, PORTABLE CHANGEABLE MESSAGE SIGN SPECIAL SHALL HAVE EQUIVALENT FLASHING BEACONS AS REAL TIME TRAFFIC CONTROL SIGNING. COST INCLUDED IN PORTABLE CHANGEABLE MESSAGE SIGN SPECIAL.

DESIGNER NOTE:
USE IN PLACE OF HIGHWAY STANDARD 701400.
REQUIRES SPECIAL PROVISIONS FOR SMART TRAFFIC MONITORING SYTEM AND CONTROL OF WORK - SMART WORK ZONE.

LEGEND:

- ARROW BOARD
- PORTABLE CHANGEABLE MESSAGE SIGN SPECIAL (PCMS)
- SIGN
- REAL-TIME TRAFFIC CONTROL SIGNING
- TYPE II BARRICADE, DRUM, OR VERTICAL BARRICADE WITH MONODIRECTIONAL FLASHING LIGHT.
- TEMPORARY RUMBLE STRIPS (SPECIAL). SEE DETAIL & SPECIAL PROVISION
- SPEED DISPLAY TRAILER

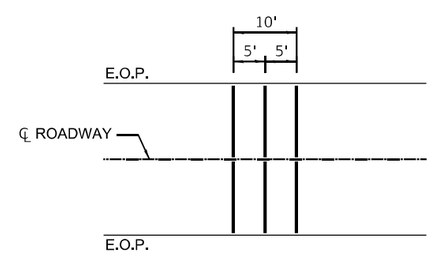

TEMPORARY RUMBLE STRIP (SPECIAL)

GENERAL NOTE:

THIS STANDARD IS USED WHERE A LANE CLOSURE IS IN PLACE LONGER THAN ONE CONSECUTIVE WEEK OR INCLUDING A WEEKEND OR HOLIDAY AS DESCRIBED IN KEEPING ROADS OPEN TO TRAFFIC.

THE FIRST TWO SIGNS ARE STATIONARY. THE OTHER SIGNS, ARROWBOARDS AND MESSAGE BOARDS SHALL BE MOVED AS NECESSARY TO MAINTAIN THE REQUIRED DISTANCE FROM THE START OF THE LANE CLOSURE TAPER(S).

SEE SPECIAL PROVISIONS FOR SMART TRAFFIC MONITORING SYSTEM, PORTABLE CHANGEABLE MESSAGE SIGN SPECIAL AND CONTROL OF WORK.

THIS DETAIL APPLIES TO BOTH NB AND SB APPROACHES TO THE WORK ZONE.

WHEN THE RIGHT LANE IS CLOSED, RIGHT LANE CLOSED SIGNS SHALL BE SUBSTITUTED FOR LEFT LANE CLOSED SIGNS.

WHEN EXISTING SIGNS, POLES, AND OTHER ITEMS CONFLICT WITH LOCATING THE EQUIPMENT SHOWN, THE CONTRACTOR SHALL COORDINATE WITH THE ENGINEER TO DECONFLICT EQUIPMENT PLACEMENT.

ALL ORANGE SIGN SHEETING SHALL BE FLOURESCENT ORANGE MATERIAL.

701-12

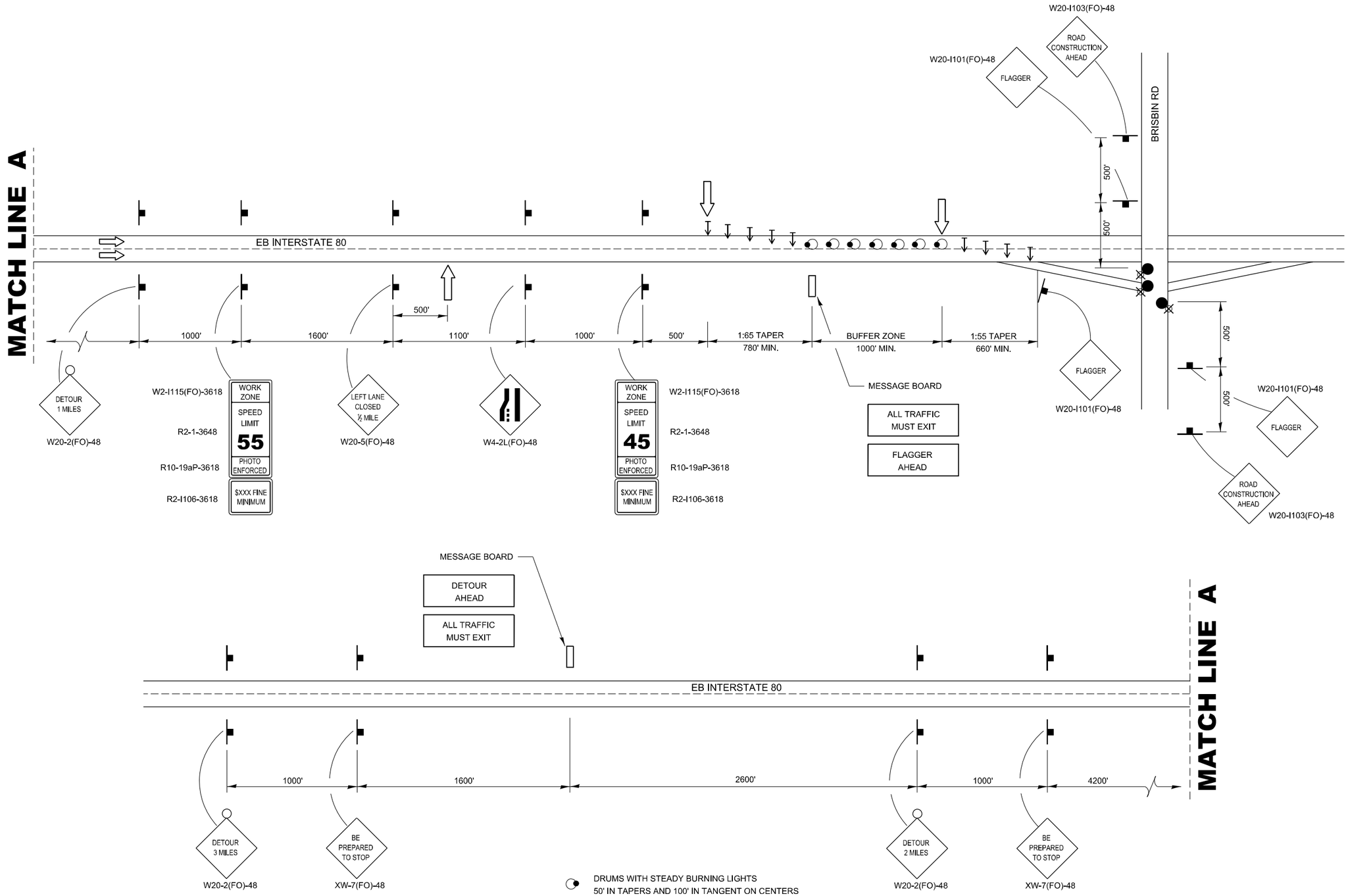

NOTE:

THIS WORK WILL BE PAID FOR AT THE CONTRACT UNIT PRICE FOR TRAFFIC CONTROL AND PROTECTION (SPECIAL). SEE SPECIAL PROVISIONS FOR ADDITIONAL DETAILS.

701-1

LIN ENGINEERING,LTD. Consulting Engineers Westmont, Illinois	USER NAME = 14nho	DESIGNED - RC	REVISED -	STATE OF ILLINOIS DEPARTMENT OF TRANSPORTATION	W.C. RAILROAD OVER F.A.I. ROUTE 80 DISTRICT 3 DETAILS	F.A.I. RTE.	SECTION	COUNTY	TOTAL SHEETS / SHEET NO.
		DRAWN - RC	REVISED -			80	(32, 47-4)VB, HBR-3	GRUNDY/KENDALL	143 / 143
	PLOT SCALE = 100.0000 ' / in.	CHECKED - ST	REVISED -					CONTRACT NO. 66295	
	PLOT DATE = 1/9/2025	DATE - 1/2025	REVISED -		SCALE: N.T.S. SHEET 4 OF 4 SHEETS STA. TO STA.		ILLINOIS	FED. AID PROJECT	