08-01-2025 LETTING ITEM 059

F.A.S RTE.	SECTION	COUNTY	TOTAL SHEETS	SHEET NO.
904	101RS-6	*	40	1
	ILLINOIS	CONTRACT NO. 78A74		

*JOHNSON/WILLIAMSON

STATE OF ILLINOIS
DEPARTMENT OF TRANSPORTATION

PROPOSED HIGHWAY PLANS

FAS ROUTE 904 (IL 166)
SECTION 101RS-6

RESURFACING
WILLIAMSON/JOHNSON COUNTIES

C-99-100-24

D-99-053-24

LOCATION OF SECTION INDICATED THUS: -

FOR INDEX OF SHEETS, SEE SHEET NO. 3
FOR SUMMARY OF QUANTITIES, SEE SHEETS 5-8

TRAFFIC DATA (2023)
ADT: 2550 %TRUCKS: 8.6%

TOWNSHIPS
CREAL SPRINGS
NEW BURNSIDE
STONE FORT

STATION EQUATIONS

STA 50+81.93 BK = STA 50+95.49 AH
STA 136+57.10 BK = STA 136+62.20 AH
STA 188+50.30 BK = STA 188+54.57 AH
STA 229+61.14 BK = STA 229+77.65 AH
STA 371+39.04 BK = STA 371+61.05 AH
STA 503+29.10 BK = STA 502+63.20 AH
STA 523+69.42 BK = STA 519+94.37 AH

POSTED SPEED: 55 MPH, 30MPH, 20MPH

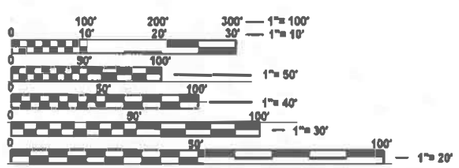

FULL SIZE PLANS HAVE BEEN PREPARED USING STANDARD ENGINEERING SCALES. REDUCED SIZED PLANS WILL NOT CONFORM TO STANDARD SCALES. IN MAKING MEASUREMENTS ON REDUCED PLANS, THE ABOVE SCALES MAY BE USED.

J.U.L.I.E.
JOINT UTILITY LOCATION INFORMATION FOR EXCAVATION
1-800-892-0123
OR 811

PROJECT BEGINS
0.1 MIL SOUTH OF TUNE RD
STA 14+99

BRIDGE OMISSION
SN 100-0031
STA 241+73.14 TO
STA 242+46.83

STA 50+81.93 BK = STA 50+95.49 AH

STA 503+29.10 BK = STA 502+63.20 AH

STA 523+69.42 BK = STA 519+94.37AH

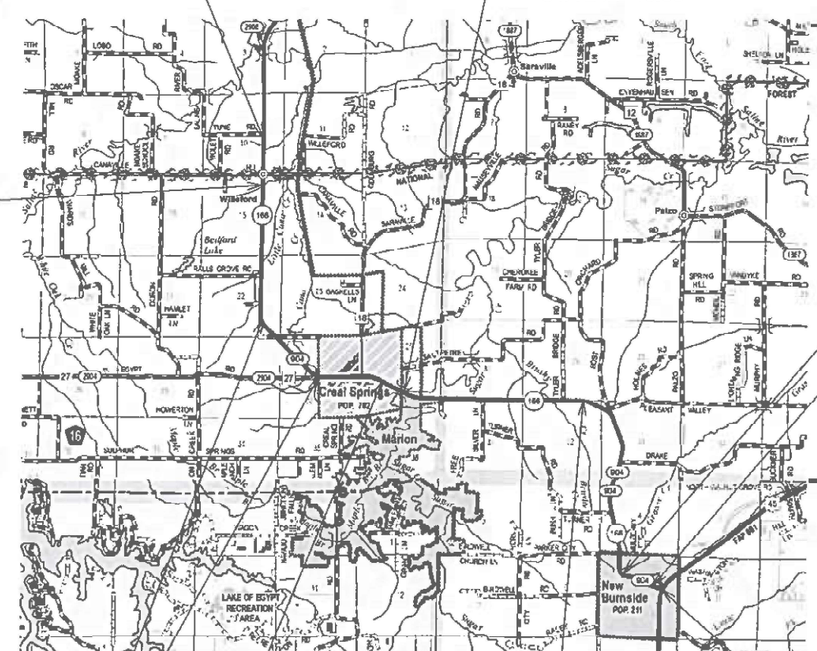

STA136+57.10 BK = STA 136+62.20 AH

STA 188+50.30 BK = STA 188+54.57 AH

STA 229+61.14 BK = STA 229+77.65 HA

STA 371+39.04 BK = STA 371+61.05 AH

GROSS LENGTH = 51288.5 FT. = 9.71MILE
NET LENGTH = 51214.8 FT. = 9.7 MILE

PROJECT ENDS
US 45 NEW BURNSIDE
STA 524+08

STATE OF ILLINOIS
DEPARTMENT OF TRANSPORTATION

SUBMITTED April 25 2025
Lora S. Romsey
REGIONAL ENGINEER

June 27 2025
ENGINEER OF DESIGN AND ENVIRONMENT

June 27 2025
DIRECTOR OF HIGHWAYS PROJECT IMPLEMENTATION

PROJECT ENGINEER MICHAEL CHEAK
PROJECT MANAGER SEAN GREENLEE

CONTRACT NO. 78A74

PRINTED BY THE AUTHORITY OF THE STATE OF ILLINOIS

REV - MS

Prepared By: _____
DISTRICT STUDIES & PLANS ENGINEER

Examined By: _____
DISTRICT LAND ACQUISITION ENGINEER

Examined By: _____
DISTRICT PROGRAM DEVELOPMENT ENGINEER

Examined By: _____
DISTRICT OPERATIONS ENGINEER

Examined By: _____
DISTRICT PROJECT IMPLEMENTATION ENGINEER

Examined By: _____
DISTRICT CONSTRUCTION ENGINEER

Examined By: _____
DISTRICT MATERIALS ENGINEER

MODEL: SIGNATURE SHEET-2 [Sheet]
FILE NAME: c:\pw_work\pwidot\michael.cheak\d1106657\D978A74-SHA-Cover_Sig.dgn

USER NAME = michael.cheak	DESIGNED -	REVISED -	STATE OF ILLINOIS DEPARTMENT OF TRANSPORTATION
	DRAWN -	REVISED -	
	CHECKED -	REVISED -	
PLOT DATE = 4/17/2025	DATE -	REVISED -	

SIGNATURE SHEET

SCALE: SHEET 2 OF 2 SHEETS STA. TO STA.

F.A.S RTE.	SECTION	COUNTY	TOTAL SHEETS	SHEET NO.
904	101RS-6	*	40	2

CONTRACT NO. 78A74

ILLINOIS FED. AID PROJECT

*JOHNSON/WILLIAMSON

INDEX OF SHEETS

HIGHWAY STANDARDS

000001-08 STANDARD SYMBOLS, ABBREVIATIONS AND PATTERNS
001001-02 AREAS OF REINFORCEMENT BARS
001006 DECIMAL OF AN INCH AND OF A FOOT
424001-12 PERPENDICULAR CURB RAMPS FOR SIDEWALKS
424016-06 MID-BLOCK CURB RAMPS FOR SIDEWALKS
442201-03 CLASS C & D PATCHES
542401-04 METAL FLARED END SECTION FOR PIPE CULVERTS
606001-08 CONCRETE CURB TYPE B AND COMBINATION CONCRETE CURB AND GUTTER
606201-04 TYPE B GUTTER (INLET, OUTLET & ENTRANCE)
630301-09 SHOULDER WIDENING FOR TYPE 1 (SPECIAL) GUARDRAIL TERMINALS
701001-02 OFF-ROAD OPERATIONS, 2L, 2W, MORE THAN 15 FT AWAY
701006-05 OFF-ROADOPERATIONS, 2L, 2W, 15 FT TO 24 IN FROM PAVEMENT EDGE
701011-04 OFF-ROAD MOVING OPERATIONS, 2L, 2W, DAY ONLY
701201-05 LANE CLOSURE, 2L, 2W, DAY ONLY, FOR SPEEDS 45 MPH OR MORE
701301-04 LANE CLOSURE, 2L, 2W, SHORT TIME OPERATIONS
701306-04 LANE CLOSURE, 2L, 2W, SLOW MOVING OPERATIONS DAY ONLY, FOR SPEEDS 45 MPH OR MORE
701311-03 LANE CLOSURE, 2L, 2W, MOVING OPERATIONS - DAY ONLY
701336-07 LANE CLOSURE, 2L, 2W, WORK AREAS IN SERIES, FOR SPEEDS 45MPH OR MORE
701501-06 URBAN LANE CLOSURE, 2L, 2W, UNDIVIDED
701801-06 SIDEWALK, CORNER OR CROSSWALK CLOSURE
701901-10 TRAFFIC CONTROL DEVICES
725001-01 OBJECT AND TERMINAL MARKERS
780001-05 TYPICAL PAVEMENT MARKINGS
781001-04 TYPICAL APPLICATIONS RAISED REFLECTIVE PAVEMENT MARKERS
782006-01 GUARDRAIL AND BARRIER WALL REFLECTOR MOUNTING DETAILS

MTD CROSSING RESTRICTIONS TABLE

ROUTE (IL 166) SN & CENTERLINE STATION			EXISTING FILL HEIGHT OVER BOX CULVERT (FOOT)	THICKNESS OF EXISTING PAVEMENT OVER BOX CULVERT (FOOT)	MAXIM GROSS WEIGHT RESTRICTIONS (TONS)	MTD CROSSING RESTRICTIONS
SN 100-7058	STA	19+78	2.4	0.875	40	Emptied *
SN 100-7057	STA	42+75		0.875	40	Emptied *
SN 100-7056	STA	78+66	5.7	0.875	40	Emptied *
SN 100-7055	STA	90+18	4	0.875	40	Emptied *
SN 100-7054	STA	99+90	0.5	0.875	40	Emptied *
SN 100-7053	STA	162+84	1.6	0.875	40	Emptied *
SN 100-7052	STA	176+80	0.5	0.875	40	Emptied *
SN 100-7051	STA	184+84	1	0.875	40	Emptied *
SN 100-0031	STA	242+07			40	Emptied *
SN 100-7050	STA	314+50	0.3	0.875	40	Emptied *
SN 100-7049	STA	315+86	0.5	0.875	40	Emptied *
SN 100-7048	STA	344+03	0.5	0.875	40	Emptied *
SN 100-7047	STA	357+14	0.5	0.875	40	Emptied *
SN 044-7030	STA	478+28	2	0.875	40	Emptied *
SN 044-7029	STA	514+35	8	0.875	40	Emptied *
SN 044-7028	STA	521+79	5.8	0.875	40	Emptied *

* THE CONTRACTOR SHALL REFER TO BDE SPECIAL PROVISION FOR MATERIAL TRANSFER DEVICE

REV.-SK
REV - MS

MODEL: INDEX OF SHEETS-1 [Sheet]
FILE NAME: c:\pw_work\pw\dot\whitede\d1068570\D974A74-ShtB-Index_GenNotes.dgn

USER NAME = dylan.white	DESIGNED -	REVISED -	STATE OF ILLINOIS DEPARTMENT OF TRANSPORTATION
	DRAWN -	REVISED -	
	CHECKED -	REVISED -	
PLOT DATE = 5/12/2025	DATE -	REVISED -	

INDEX OF SHEETS, HIGHWAY STANDARDS, MTD TABLE

SCALE: SHEET 1 OF 2 SHEETS STA. TO STA.

F.A.S RTE.	SECTION	COUNTY	TOTAL SHEETS	SHEET NO.
904	101RS-6	*	40	3

CONTRACT NO. 78A74

ILLINOIS FED. AID PROJECT

*JOHNSON/WILLIAMSON

GENERAL NOTES

FACTORS USED FOR ESTIMATING PLAN QUANTITIES ARE AS FOLLOWS AND SHALL NOT BE USED FOR THE BASIS OF FINAL QUANTITIES:

ALL HOT MIX ASPHALT	2.016 TONS/CU. YD.
ALL AGGREGATE	2.05 TONS/CU. YD.

THE QUANTITY OF SHORT TERM PAVEMENT MARKING SHOWN IN THE PLANS IS BASED ON ONE APPLICATION EACH FOR THE HMA SURFACE REMOVAL, BINDER COURSE, AND SURFACE COURSE

HMA RESURFACING SHALL BE PLACED IN A SEQUENCE THAT WILL MINIMIZE THE TIME THE CENTERLINE EDGE IS EXPOSED TO TRAFFIC. WHEN AT THE END OF A DAY'S OPERATION THE EXPOSED CENTERLINE EDGE IS GREATER THAN 2,000 FT, THE CONTRACTOR SHALL BE REQUIRED TO PAVE IN THE ADJACENT LANE ON THE FOLLOWING WORK DAY. PRIOR TO WINTER SHUTDOWN, RESURFACING ON ADJACENT LANES IS TO BE BROUGHT UP TO THE SAME ELEVATION.

LONGITUDINAL JOINT SEALANT SHALL BE PLACED UNDER THE HMA SURFACE COURSE

VIBRATORY ROLLERS WILL NOT BE ALLOWED WITHIN THE CORPORATE LIMITS OF CREAL SPRINGS AND NEW BURNSIDE

INCIDENTAL HOT-MIX ASPHALT SURFACING SHALL BE PAVED IN A SEPARATE OPERATION FROM THE MAINLINE PAVEMENT

WHEN SHOULDER RESURFACING OF 6 FEET OR LESS IS ALLOWED TO BE PLACED SIMULTANEOUSLY WITH THE ADJACENT TRAFFIC LANE. THE MAINLINE QUALITY MANAGEMENT PROGRAM WILL BE ENFORCED FOR THE MAINLINE AND SHOULDERS

COMMITMENTS: NONE

HMA MIXTURE REQUIREMENTS TABLES

The following HMA mixture requirements are applicable for this project

Location(s):	Hot-Mix Asphalt Surface Course
Mixture Use(s):	Hot-Mix Asphalt Surface Course, Mix D, N70
AB/PG:	PG64-22
Design Air Voids:	4.0%, 70 Gyration Design
Mixture Composition:	IL-9.5 mm
Friction Aggregate:	Mix D
Mixture Weight:	112 lbs/Sq Yd/in
Quality Management Program:	PFP
Sublot Size:	1,000 tons
Material Transfer Device	Yes

Location(s):	Hot-Mix Asphalt Binder Course 1 1/4", Hot-Mix Asphalt Shoulders 2 3/4" (Lower Lift)
Mixture Use(s):	Hot-Mix Asphalt Binder Course, IL-9.5FG, N70
AB/PG:	PG64-22
Design Air Voids:	4.0%, 70 Gyration Design
Mixture Composition:	IL-9.5 mm Fine Graded
Friction Aggregate:	None
Mixture Weight:	112 lbs/Sq Yd/in
Quality Management Program:	QCP
Sublot Size:	1,000 tons
Material Transfer Device	Yes

Location(s):	Hot-Mix Asphalt Binder Course 2 1/4"
Mixture Use(s):	Hot-Mix Asphalt Binder Course, IL-19.0,N70
AB/PG:	PG64-22
Design Air Voids:	4.0%, 70 Gyration Design
Mixture Composition:	IL-19.0mm
Friction Aggregate:	None
Mixture Weight:	112 lbs/Sq Yd/in
Quality Management Program:	QCP
Sublot Size:	1,000 tons
Material Transfer Device	Yes

Location(s):	Hot-Mix Asphalt Shoulders 2 3/4" (Surface Lift), Hot-Mix Asphalt Incidental Surfacing
Mixture Use(s):	Hot-Mix Asphalt Surface Course, Mix C, N30
AB/PG:	PG64-22
Design Air Voids:	4.0%, 30 Gyration Design
Mixture Composition:	IL-9.5L
Friction Aggregate:	Mix C
Mixture Weight:	112 lbs/Sq Yd/in
Quality Management Program:	QC/QA
Sublot Size:	3,000 tons
Material Transfer Device	No

SUMMARY OF QUANTITIES

CODE NUMBER	ITEM DESCRIPTION	UNIT	TOTAL QUANTITY	WILLIAMSON	JOHNSON
			COUNTY:	WILLIAMSON	JOHNSON
			ROUTE:	FAS 904	FAS 904
			FUNDING:		
			LOCATION:	RURAL	RURAL
				ROADWAY	ROADWAY
				0005	0005
20400800	FURNISHED EXCAVATION	CU YD	1	1	
20800150	TRENCH BACKFILL	CU YD	1	1	
40600290	BITUMINOUS MATERIALS (TACK COAT)	POUND	100,783	81,399	19,384
40600370	LONGITUDINAL JOINT SEALANT	FOOT	51,215	41,591	9,624
40600405	MATERIAL TRANSFER DEVICE	TON	25,571	21,186	4,385
40600982	HOT-MIX ASPHALT SURFACE REMOVAL - BUTT JOINT	SQ YD	1,400	774	626
40600990	TEMPORARY RAMP	SQ YD	742	407	335
40602970	HOT-MIX ASPHALT BINDER COURSE, IL-9.5FG, N70	TON	7,189	5,186	2,003
40603085	HOT-MIX ASPHALT BINDER COURSE, IL-19.0, N70	TON	5,917	5,917	
40604062	HOT-MIX ASPHALT SURFACE COURSE, IL-9.5, MIX "D", N70	TON	12,465	10,083	2,382
40800050	INCIDENTAL HOT-MIX ASPHALT SURFACING	TON	199	131	68
42001300	PROTECTIVE COAT	SQ YD	14	14	
42400800	DETECTABLE WARNINGS	SQ FT	115	115	
44000155	HOT-MIX ASPHALT SURFACE REMOVAL, 1 1/2"	SQ YD	121,639	94,807	26,832
44000160	HOT-MIX ASPHALT SURFACE REMOVAL, 2 3/4"	SQ YD	22,480	21,368	1,112
44000164	HOT-MIX ASPHALT SURFACE REMOVAL, 3 3/4"	SQ YD	2,295	2,295	

REV - MS

MODEL: SOQ-1 [Sheet]
FILE NAME: c:\pw_work\pwidot\white\dgn\d1068570\D978A74-SHtC-SoQ.dgn

USER NAME = dylan.white	DESIGNED -	REVISED -	STATE OF ILLINOIS DEPARTMENT OF TRANSPORTATION
	DRAWN -	REVISED -	
	CHECKED -	REVISED -	
PLOT DATE = 5/14/2025	DATE -	REVISED -	

SUMMARY OF QUANTITIES

SCALE: SHEET 1 OF 4 SHEETS STA. TO STA.

F.A.S RTE.	SECTION	COUNTY	TOTAL SHEETS	SHEET NO.
904	101RS-6	*	40	5
		CONTRACT NO. 78A74		
		ILLINOIS FED. AID PROJECT		

*JOHNSON/WILLIAMSON

SUMMARY OF QUANTITIES - CONT

100% STATE

	CODE NUMBER	ITEM DESCRIPTION	UNIT	TOTAL QUANTITY	WILLIAMSON	JOHNSON
				COUNTY:	WILLIAMSON	JOHNSON
				ROUTE:	FAS 904	FAS 904
				FUNDING:		
				LOCATION:	RURAL	RURAL
					ROADWAY	ROADWAY
					0005	0005
	44000400	GUTTER REMOVAL	FOOT	65	65	
	44000600	SIDEWALK REMOVAL	SQ FT	829	829	
	44201373	CLASS C PATCHES, TYPE I, 12 INCH	SQ YD	13	13	
	44201377	CLASS C PATCHES, TYPE II, 12 INCH	SQ YD	1,571	1,505	66
	44201381	CLASS C PATCHES, TYPE III, 12 INCH	SQ YD	855	855	
	44201383	CLASS C PATCHES, TYPE IV, 12 INCH	SQ YD	790	790	
	44213204	TIE BARS 3/4"	EACH	457	457	
	48102100	AGGREGATE WEDGE SHOULDER, TYPE B	TON	1,101	902	199
	48203100	HOT-MIX ASPHALT SHOULDERS	TON	72	72	
	50901760	PIPE HANDRAIL	FOOT	9	9	
	542D0215	PIPE CULVERTS, CLASS D, TYPE 1 10"	FOOT	7	7	
	54262710	METAL FLARED END SECTIONS 10"	EACH	2	2	
*	63100167	TRAFFIC BARRIER TERMINAL, TYPE 1 (SPECIAL) TANGENT	EACH	1	1	
	63200310	GUARDRAIL REMOVAL	FOOT	47	47	
	67000400	ENGINEER'S FIELD OFFICE, TYPE A	CAL MO	6	5	1

* SPECIALTY ITEM

REV - MS

MODEL: SOQ-2 [Sheet]
FILE NAME: c:\pw_work\pwidot\white\dgn\d1066570\D978A74-Sht-SoQ.dgn

USER NAME = dylan.white	DESIGNED -	REVISED -	STATE OF ILLINOIS DEPARTMENT OF TRANSPORTATION
	DRAWN -	REVISED -	
	CHECKED -	REVISED -	
PLOT DATE = 5/14/2025	DATE -	REVISED -	

SUMMARY OF QUANTITIES

SCALE: SHEET 2 OF 4 SHEETS STA. TO STA.

F.A.S RTE.	SECTION	COUNTY	TOTAL SHEETS	SHEET NO.
904	101RS-6	*	40	6
		CONTRACT NO. 78A74		
		ILLINOIS FED. AID PROJECT		

*JOHNSON/WILLIAMSON

SUMMARY OF QUANTITIES - CONT

100% STATE

CODE NUMBER	ITEM DESCRIPTION	UNIT	TOTAL QUANTITY	WILLIAMSON	JOHNSON
			COUNTY:	WILLIAMSON	JOHNSON
			ROUTE:	FAS 904	FAS 904
			FUNDING:		
			LOCATION:	RURAL	RURAL
				ROADWAY	ROADWAY
				0005	0005
67100100	MOBILIZATION	L SUM	1	0.80	0.20
70100450	TRAFFIC CONTROL AND PROTECTION, STANDARD 701201	L SUM	1	0.80	0.20
70100460	TRAFFIC CONTROL AND PROTECTION, STANDARD 701306	L SUM	1	0.80	0.20
70100600	TRAFFIC CONTROL AND PROTECTION, STANDARD 701336	L SUM	1	0.80	0.20
70102620	TRAFFIC CONTROL AND PROTECTION, STANDARD 701501	L SUM	1	1	
70102640	TRAFFIC CONTROL AND PROTECTION, STANDARD 701801	L SUM	1	1	
70107025	CHANGEABLE MESSAGE SIGN	CAL DA	28	14	14
70300100	SHORT TERM PAVEMENT MARKING	FOOT	15,738	12,522	3,216
70300150	SHORT TERM PAVEMENT MARKING REMOVAL	SQ FT	1,749	1,391	358
70300221	TEMPORARY PAVEMENT MARKING - LINE 4"- PAINT	FOOT	167,192	132,283	34,909
70300241	TEMPORARY PAVEMENT MARKING - LINE 6"- PAINT	FOOT	90	90	
70300261	TEMPORARY PAVEMENT MARKING - LINE 12"- PAINT	FOOT	70	70	
70300281	TEMPORARY PAVEMENT MARKING - LINE 24"- PAINT	FOOT	36		36
* 72501000	TERMINAL MARKER - DIRECT APPLIED	EACH	1	1	
* 78001110	PAINT PAVEMENT MARKING - LINE 4"	FOOT	167,192	132,283	34,909

* SPECIALTY ITEM

REV - MS

MODEL: SOQ-3 [Sheet]
FILE NAME: c:\pw_work\pwidot\white\dgn\d1068570\D978A74-SHtC-SoQ.dgn

USER NAME = dylan.white	DESIGNED -	REVISED -	STATE OF ILLINOIS DEPARTMENT OF TRANSPORTATION
	DRAWN -	REVISED -	
	CHECKED -	REVISED -	
PLOT DATE = 5/14/2025	DATE -	REVISED -	

SUMMARY OF QUANTITIES

SCALE: SHEET 3 OF 4 SHEETS STA. TO STA.

F.A.S RTE.	SECTION	COUNTY	TOTAL SHEETS	SHEET NO.
904	101RS-6	*	40	7
		CONTRACT NO. 78A74		
		ILLINOIS FED. AID PROJECT		

*JOHNSON/WILLIAMSON

SUMMARY OF QUANTITIES - CONT

100% STATE

	CODE NUMBER	ITEM DESCRIPTION	UNIT	TOTAL QUANTITY	WILLIAMSON	JOHNSON
				COUNTY:	WILLIAMSON	JOHNSON
				ROUTE:	FAS 904	FAS 904
				FUNDING:		
				LOCATION:	RURAL	RURAL
					ROADWAY	ROADWAY
					0005	0005
*	78001130	PAINT PAVEMENT MARKING - LINE 6"	FOOT	90	90	
*	78001150	PAINT PAVEMENT MARKING - LINE 12"	FOOT	70	70	
*	78001180	PAINT PAVEMENT MARKING - LINE 24"	FOOT	36		36
*	78100100	RAISED REFLECTIVE PAVEMENT MARKER	EACH	670	543	127
*	78200005	GUARDRAIL REFLECTORS, TYPE A	EACH	1	1	
	78300200	RAISED REFLECTIVE PAVEMENT MARKER REMOVAL	EACH	670	543	127
	78300202	PAVEMENT MARKING REMOVAL - WATER BLASTING	SQ FT	55,918	44,210	11,708
	X4240420	PORTLAND CEMENT CONCRETE SIDEWALK 4 INCH (SPECIAL)	SQ FT	1,173	1,173	
	X4401198	HOT-MIX ASPHALT SURFACE REMOVAL, VARIABLE DEPTH	SQ YD	1,510	1,291	219
	X4430200	STRIP REFLECTIVE CRACK CONTROL TREATMENT	FOOT	102,440	83,190	19,250
	X6063000	CONCRETE GUTTER, TYPE B (SPECIAL)	FOOT	65	65	
	Z0012450	CONCRETE STEPS	CU YD	0.5	0.5	
	Z0013798	CONSTRUCTION LAYOUT	L SUM	1	1	
Ø	Z0076604	TRAINEES TRAINING PROGRAM GRADUATE	HOUR	1000	1000	

* SPECIALTY ITEM

Ø 0042

REV - MS

MODEL: SOQ-4 [Sheet]
FILE NAME: c:\pw_work\pwidot\white\dev\d1068570\D978A74-SHtC-SoQ.dgn

USER NAME = dylan.white	DESIGNED -	REVISED -	STATE OF ILLINOIS DEPARTMENT OF TRANSPORTATION
	DRAWN -	REVISED -	
	CHECKED -	REVISED -	
PLOT DATE = 5/14/2025	DATE -	REVISED -	

SUMMARY OF QUANTITIES

SCALE: SHEET 4 OF 4 SHEETS STA. TO STA.

F.A.S RTE.	SECTION	COUNTY	TOTAL SHEETS	SHEET NO.
904	101RS-6	*	40	8
		CONTRACT NO. 78A74		
		ILLINOIS FED. AID PROJECT		

*JOHNSON/WILLIAMSON

℄
IL 166
(FAS 904)

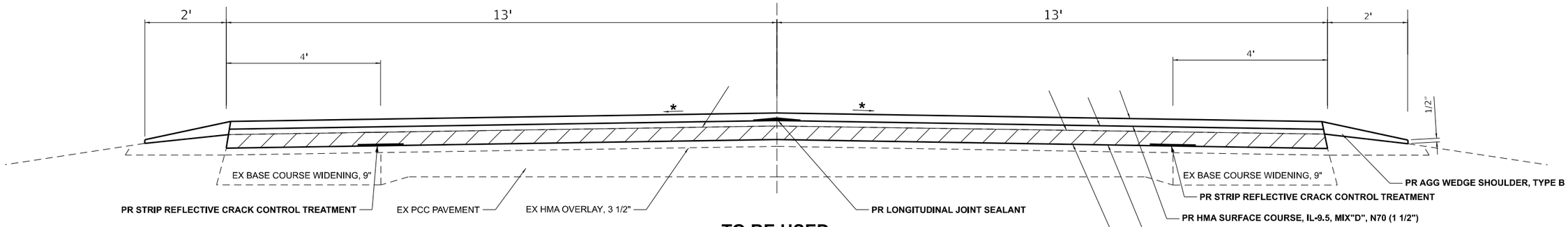

TO BE USED:

STA 14+99 TO STA 40+57
STA 44+95 TO STA 50+81.93 BK
STA 50+95.49 AH TO STA 97+69
STA 103+05 TO STA 136+57.10 BK
STA 136+62.20 AH TO STA 174+55

*MATCH EXISTING SLOPE

℄
IL 166
(FAS 904)

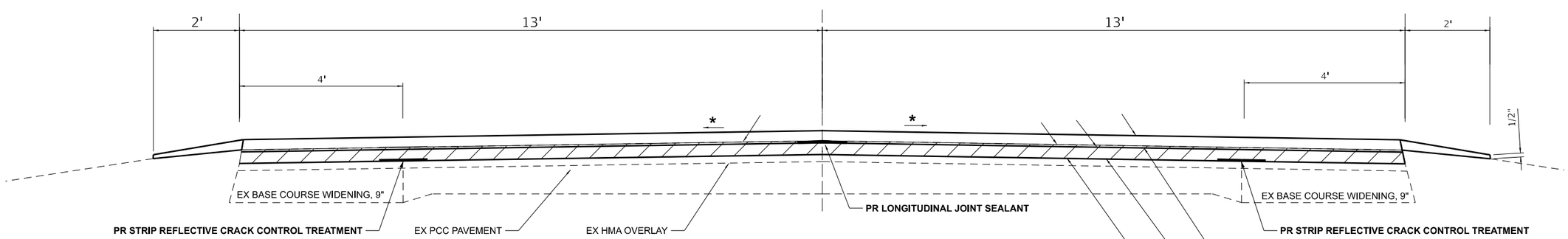

TO BE USED:

STA 178+83 TO STA 181+86
STA 245+20 TO STA 312+87
STA 318+72 TO STA 341+58
STA 347+01 TO STA 371+39.04 BK
STA 371+61.05 AH TO STA 477+53
STA 479+03 TO STA 503+29.10 BK
STA 502+63.20 AH TO STA 523+69.42 BK
STA 519+94.37 AH TO STA 522+22

*MATCH EXISTING SLOPE

MODEL: TYPICALS-1 [Sheet]
FILE NAME: c:\pw_work\pwidot\white\ed\d1068570\D978A74-SHD-Typicals.dgn

USER NAME = dylan.white	DESIGNED -	REVISED -	STATE OF ILLINOIS DEPARTMENT OF TRANSPORTATION	TYPICALS	F.A.S RTE.	SECTION	COUNTY	TOTAL SHEETS	SHEET NO.
	DRAWN -	REVISED -			904	101RS-6	*	40	9
	CHECKED -	REVISED -					CONTRACT NO. 78A74		
PLOT DATE = 5/12/2025	DATE -	REVISED -		SCALE: SHEET 1 OF 6 SHEETS STA. TO STA.		ILLINOIS	FED. AID PROJECT		

*JOHNSON/WILLIAMSON

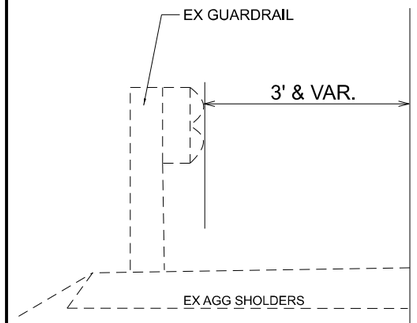

TO BE USED LEFT:

STA 41+94 TO STA 44+30
STA 99+31 TO STA 101+71
STA 176+04 TO STA 178+58
STA 184+03 TO STA 186+65
STA 239+94 TO STA 241+73.17
STA 242+46.83 TO STA 244+95

TO BE USED RIGHT:

STA 41+02 TO STA 43+27
STA 98+14 TO STA 100+54
STA 175+00 TO STA 177+48
STA 183+18 TO STA 185+55
STA 239+32 TO STA 241+73.17
STA 242+46.83 TO STA 244+24

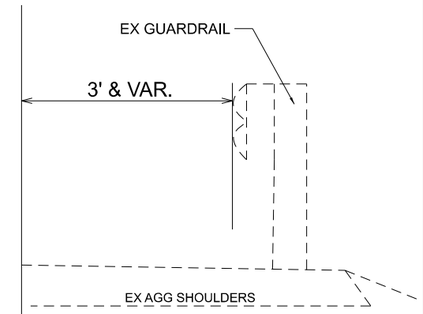

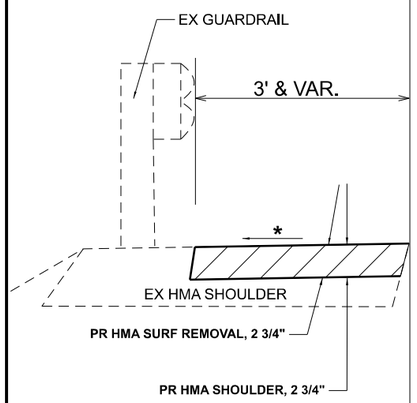

TO BE USED LEFT:

STA 315+07 TO STA 318+47
STA 343+28 TO STA 346+76
GAP PCC SHOULDERS (STA 343+57 TO STA 344+57)

TO BE USED RIGHT:

STA 313+12 TO STA 316+52
STA 341+83 TO STA 345+34
GAP PCC SHOULDERS (STA 343+57 TO STA 344+57)

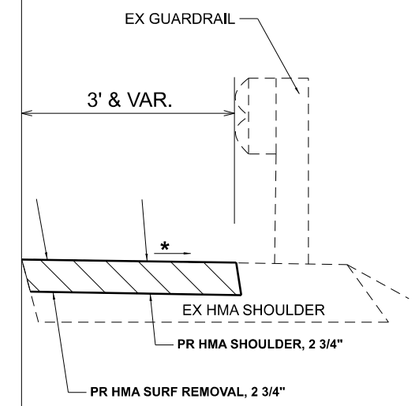

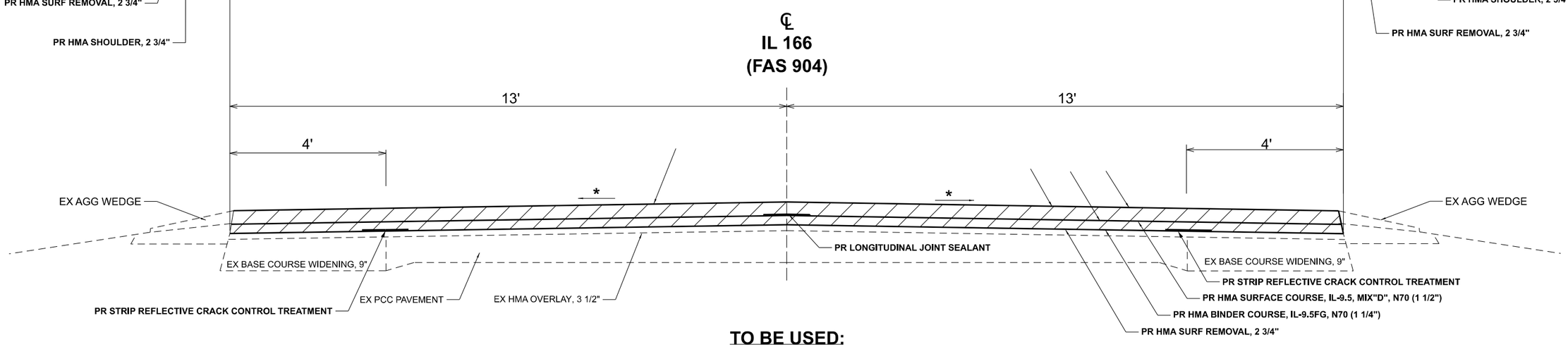

TO BE USED:

STA 40+57 TO STA 44+95 (SN 100-7057) **
STA 97+69 TO STA 103+05 (SN 100-7054) **
STA 174+55 TO STA 178+83 (SN 100-7052) **
STA 181+86 TO STA 188+50.30 BK (SN 100-7051) **
STA 188+54.57 AH TO STA 189+51 (LT)
STA 188+54.57 AH TO STA 190+01 (RT)
STA 228+00 TO STA 229+61.14 BK
STA 229+44.65 AH TO STA 241+73.17 **
GAP HMA DECK SN100-0031 (STA 241+73.17 TO STA 242+46.83) **
STA 242+46.83 TO STA 245+20 **
STA 312+87 TO STA 318+72 (SN 100-7050 & SN 100-7049) **
STA 341+58 TO STA 347+01 (SN 100-7048) **
STA 477+53 TO STA 479+03 (SN 044-7030) **

*MATCH EXISTING SLOPE
**SEE TRANSITION DETAILS

MODEL: TYPICALS-2 [Sheet]
FILE NAME: c:\pw_work\pwidot\white\d1066570\D978A74-SHID-Typicals.dgn

USER NAME = dylan.white	DESIGNED -	REVISED -	STATE OF ILLINOIS DEPARTMENT OF TRANSPORTATION	TYPICALS	F.A.S RTE.	SECTION	COUNTY	TOTAL SHEETS	SHEET NO.
	DRAWN -	REVISED -			904	101RS-6	*	40	10
	CHECKED -	REVISED -			CONTRACT NO. 78A74				
PLOT DATE = 5/12/2025	DATE -	REVISED -		SCALE: SHEET 2 OF 6 SHEETS STA. TO STA.	ILLINOIS	FED. AID PROJECT			

*JOHNSON/WILLIAMSON

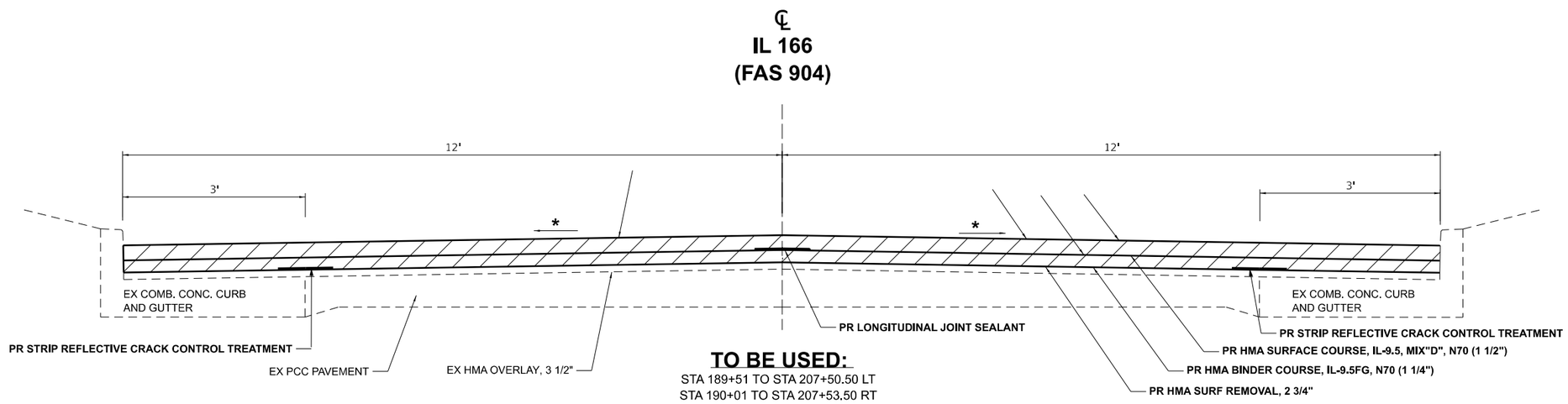

TO BE USED:

STA 189+51 TO STA 207+50.50 LT
STA 190+01 TO STA 207+53.50 RT

*MATCH EXISTING SLOPE

MODEL: TYPICALS-3 [Sheet]
FILE NAME: c:\pw_work\pwidot\whiteda\d1066570\D978A74-SHD-Typicals.dgn

USER NAME = dylan.white	DESIGNED -	REVISED -	
	DRAWN -	REVISED -	
	CHECKED -	REVISED -	
PLOT DATE = 5/12/2025	DATE -	REVISED -	

STATE OF ILLINOIS
DEPARTMENT OF TRANSPORTATION

TYPICALS

SCALE: | SHEET 3 OF 6 SHEETS | STA. TO STA.

F.A.S RTE.	SECTION	COUNTY	TOTAL SHEETS	SHEET NO.
904	101RS-6	*	40	11

CONTRACT NO. 78A74

ILLINOIS | FED. AID PROJECT

*JOHNSON/WILLIAMSON

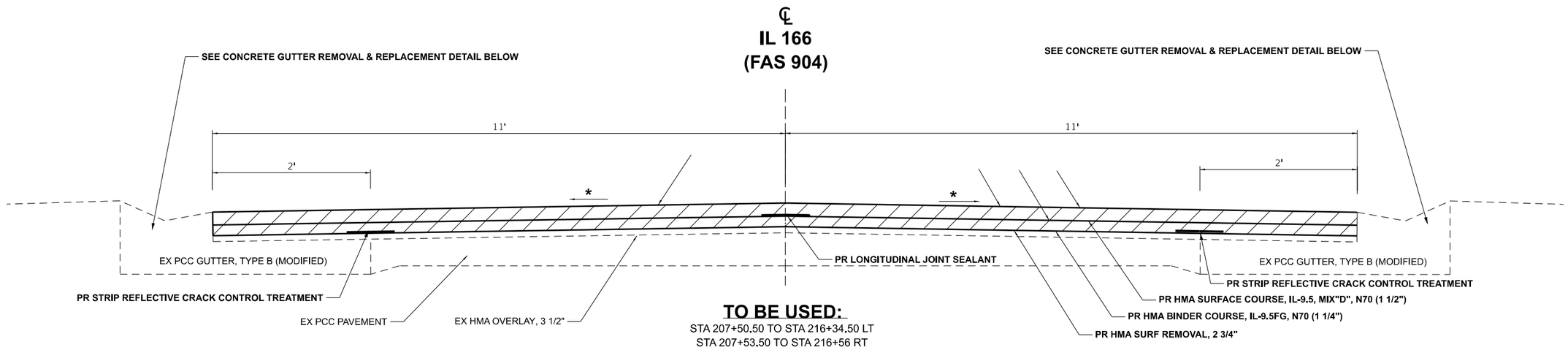

*MATCH EXISTING SLOPE

TYPE. B GUTTER REMOVAL & REPLACEMENT AT ADA CURB RAMP LOCATIONS

STA 211+29.05 TO STA 211+38.05 LT
STA 211+29.28 TO STA 211+39.25 RT
STA 214+13.79 TO STA 214+22.80 LT
STA 214+14.14 TO STA 214+23.56 RT
STA 220+92.20 TO STA 221+01.32 RT
STA 223+19.68 TO STA 223+28.04 RT
STA 223+68.68 TO STA 223+77.12 RT

*SEE ADA SHEETS FOR MORE INFORMATION

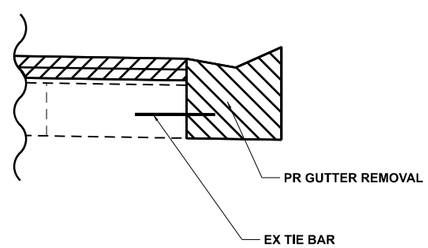

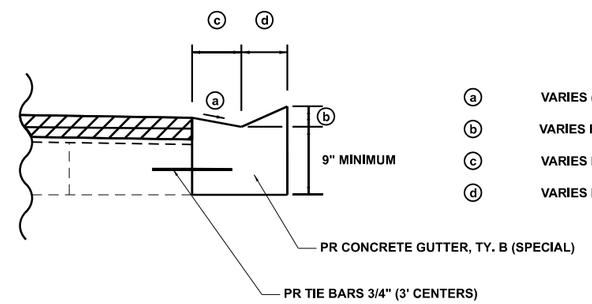

a	VARIES (5% MAX WITHIN CURB RAMP)
b	VARIES FROM 4" TO 1/2"
c	VARIES FROM 9" TO 14"
d	VARIES FROM 12" TO 7"

MODEL: TYPICALS-4 [Sheet]
FILE NAME: c:\pw_work\pwidot\white\ded\d1066570\D978A74-SHID-Typicals.dgn

USER NAME = dylan.white	DESIGNED -	REVISED -	STATE OF ILLINOIS DEPARTMENT OF TRANSPORTATION
	DRAWN -	REVISED -	
	CHECKED -	REVISED -	
PLOT DATE = 5/12/2025	DATE -	REVISED -	

TYPICALS

SCALE: SHEET 4 OF 6 SHEETS STA. TO STA.

F.A.S RTE.	SECTION	COUNTY	TOTAL SHEETS	SHEET NO.
904	101RS-6	*	40	12

CONTRACT NO. 78A74

ILLINOIS FED. AID PROJECT

*JOHNSON/WILLIAMSON

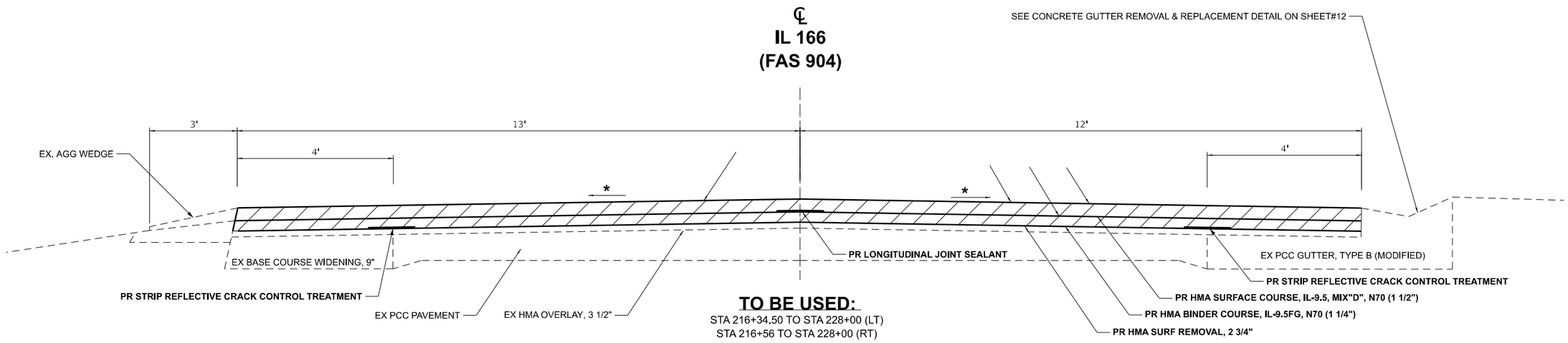

TO BE USED:

STA 216+34.50 TO STA 228+00 (LT)
STA 216+56 TO STA 228+00 (RT)

*MATCH EXISTING SLOPE

MODEL: TYPICALS-5 [Sheet]
FILE NAME: c:\pw_work\pwidot\white\d1066570\D978A74-StndD-Typicals.dgn

USER NAME = dylan.white	DESIGNED -	REVISED -	
	DRAWN -	REVISED -	
	CHECKED -	REVISED -	
PLOT DATE = 5/12/2025	DATE -	REVISED -	

STATE OF ILLINOIS
DEPARTMENT OF TRANSPORTATION

TYPICALS

SCALE: | SHEET 5 OF 6 SHEETS | STA. TO STA.

F.A.S RTE.	SECTION	COUNTY	TOTAL SHEETS	SHEET NO.
904	101RS-6	*	40	13

CONTRACT NO. 78A74

ILLINOIS | FED. AID PROJECT

*JOHNSON/WILLIAMSON

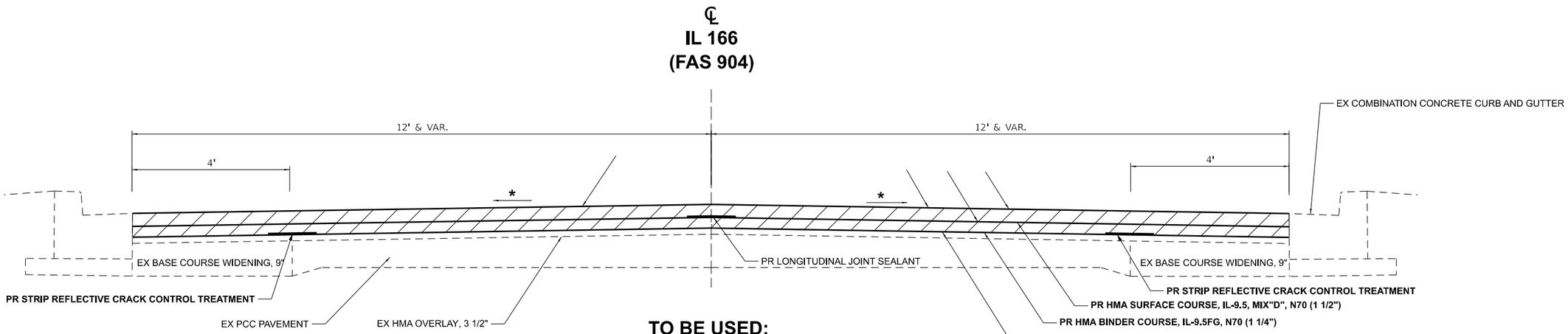

TO BE USED:

STA 522+22 TO STA 524+08

*MATCH EXISTING SLOPE

MODEL: TYPICALS-6 [Sheet]
FILE NAME: c:\pw_work\pwidot\white\de\d1066570\D978A74-ShtD-Typicals.dgn

USER NAME = dylan.white	DESIGNED -	REVISED -	
	DRAWN -	REVISED -	
	CHECKED -	REVISED -	
PLOT DATE = 5/12/2025	DATE -	REVISED -	

STATE OF ILLINOIS
DEPARTMENT OF TRANSPORTATION

TYPICALS

SCALE: | SHEET 6 OF 6 SHEETS | STA. | TO STA.

F.A.S RTE.	SECTION	COUNTY	TOTAL SHEETS	SHEET NO.
904	101RS-6	*	40	14

CONTRACT NO. 78A74

ILLINOIS | FED. AID PROJECT

*JOHNSON/WILLIAMSON

IL 166 (FAS 904) MAINLINE RESURFACING SCHEDULE

LOCATION STATION TO STATION						LENGTH	ROADWAY WIDTH	PAVEMENT AREA	HMA SURFACE REMOVAL, 1 1/2"	HMA SURFACE REMOVAL, 2 3/4"	HMA SURFACE REMOVAL, 3 3/4"	HMA SURFACE REMOVAL, VARIABLE DEPTH	HMA BINDER COURSE IL-9.5FG N70 (1 1/4")	HMA BINDER COURSE IL-19.0 N70 (2 1/4")	HMA SURFACE COURSE IL-9.5 MIX"D" N70 (1 1/2")	BITUMINOUS MATERIAL (TACK COAT)	LONG. JOINT SEALANT	STRIP REFLECTIVE CRACK CONTROL TREATMENT	TEMP RAMP	REMARKS
						INFORMATIONAL PURPOSES ONLY														
IL-166 (FAS 904)						FEET	FEET	SQ FT	SQ YD	SQ YD	SQ YD	SQ YD	TON	TON	TON	POUND	FEET	FOOT	SQ YD	
14+99		TO	15+09		LT&RT	10	26	260	29						3	13	10	20	15	
15+09		TO	15+54		LT&RT	45	26	1,170				130		17	11	88	45	90	22	
15+54		TO	40+57		LT&RT	2,503	26	65.078	7231					927	611	4,881	2,503	5,006		
40+57		TO	41+02		LT&RT	45	26	1,170				130		17	11	88	45	90		
41+02		TO	44+50		LT&RT	348	26	9,048			1006			129	85	679	348	696		
44+50		TO	44+95		LT&RT	45	26	1,170				130		17	11	88	45	90		
44+95		TO	50+81.93	BK	LT&RT	587	26	15,261	1696					218	144	1,145	587	1,174		
50+81.93	BK	TO	50+95.49	AH		STATION EQUATION														EQ
50+95.49	AH	TO	97+69		LT&RT	4,674	26	121,512	13502					1730	1140	9,114	4,674	9,348		
97+69		TO	98+14		LT&RT	45	26	1,170				130		17	11	88	45	90		
98+14		TO	102+60		LT&RT	446	26	11,596			1,289			166	109	870	446	892		
102+60		TO	103+05		LT&RT	45	26	1,170				130		17	11	88	45	90		
103+05		TO	136+57.10	BK	LT&RT	3,352	26	87,155	9684					1241	818	6,537	3,352	6,705		
136+57.10	BK	TO	136+62.20	AH		STATION EQUATION														EQ
136+62.20	AH	TO	174+55		LT&RT	3,793	26	98,613	10957					1404	925	7,396	3,793	7,586		
174+55		TO	175+00		LT&RT	45	26	1,170				130		17	11	88	45	90		
175+00		TO	178+58		LT&RT	358	26	9,308		1,035			74		88	699	358	716		
178+58		TO	178+83		LT&RT	25	26	650				73	6		7	49	25	50		
178+83		TO	181+86		LT&RT	303	26	7,878	876				63		74	591	303	606		
181+86		TO	182+11		LT&RT	25	26	650				73	6		7	49	25	50		
182+11			188+50.30	BK	LT&RT	639	26	16,622		1,847			132		156	1,247	639	1,279		
188+50.30	BK	TO	188+54.57	AH		STATION EQUATION														EQ
188+54.57	AH	TO	189+51		LT	96	13	1,254		140			10		12	95	96	96		
188+54.57	AH	TO	190+01		RT	146	13	1,904		212			16		18	143		146		
189+51		TO	207+50.50		LT	1,800	12	21,594		2,400			168		202	1,620	1,800	1,800		
190+01		TO	207+53.50		RT	1,753	12	21,030		2,337			164		197	1,578		1,753		
207+50.50		TO	216+34.50		LT	884	11	9,724		1,081			76		91	730	884	884		
207+53.50		TO	216+56.00		RT	903	11	9,928		1,104			78		93	745		903		
216+34.50		TO	223+17.00		LT	683	13	8,873		986			70		83	666	683	683		
216+56.00		TO	223+17.00		RT	661	12	7,932		882			62		75	595		661		
SUBTOTAL									43,975	12,024	2,295	926	925	5,917	5004	39,970	20,795	41,595	37	

MODEL: MAINLINE SCHEDULE [Sheet]
FILE NAME: c:\pw_work\pwidot\whitedfd\D66570\D978A74-SHEE-Schedules.dgn

USER NAME = dylan.white	DESIGNED -	REVISED -	STATE OF ILLINOIS DEPARTMENT OF TRANSPORTATION
	DRAWN -	REVISED -	
	CHECKED -	REVISED -	
PLOT DATE = 5/14/2025	DATE -	REVISED -	

MAINLINE RESURFACING SCHEDULE

SCALE: | SHEET 1 OF 12 SHEETS | STA. TO STA.

F.A.S RTE.	SECTION	COUNTY	TOTAL SHEETS	SHEET NO.
904	101RS-6	*	40	15

CONTRACT NO. 78A74

ILLINOIS | FED. AID PROJECT

*JOHNSON/WILLIAMSON

IL 166 (FAS 904) MAINLINE RESURFACING SCHEDULE CONTINUED

LOCATION STATION TO STATION						LENGTH (INFORMATIONAL PURPOSES ONLY)	ROADWAY WIDTH (INFORMATIONAL PURPOSES ONLY)	PAVEMENT AREA (INFORMATIONAL PURPOSES ONLY)	HMA SURFACE REMOVAL, 1 1/2"	HMA SURFACE REMOVAL, 2 3/4"	HMA SURFACE REMOVAL, 3 3/4"	HMA SURFACE REMOVAL, VARIABLE DEPTH	HMA BINDER COURSE IL-9.5FG N70 (1 1/4")	HMA BINDER COURSE IL-19.0 N70 (2 1/4")	HMA SURFACE COURSE IL-9.5 MIX"D" N70 (1 1/2")	BITUMINOUS MATERIAL (TACK COAT)	LONG. JOINT SEALANT	STRIP REFLECTIVE CRACK CONTROL TREATMENT	TEMP RAMP	REMARKS
IL-166 (FAS 904)						FEET	FEET	SQ FT	SQ YD	SQ YD	SQ YD	SQ YD	TON	TON	TON	POUND	FEET	FOOT	SQ YD	
223+17.00		TO	229+61.14	BK	LT&RT	644	26	16,748		1,861			132		157	1,257	644	1,289		
229+61.14	BK	TO	229+77.65	AH		STATION EQUATION														EQ
229+77.65	AH	TO	241+53.17		LT&RT	1,176	26	30,564		3,396			240		287	2,293	1,176	2,352	13	
241+53.17		TO	241+73.17		LT&RT	20	26	520	58						5	39	20	40	15	
241+73.17		TO	242+46.83		LT&RT	GAP SN 100-0031														GAP SN100-0031
242+46.83		TO	242+66.83		LT&RT	20	26	520	58						5	39	20	40	15	
242+66.83		TO	244+95		LT&RT	228	26	5,933		660			47		56	445	228	457	13	
244+95		TO	245+20		LT&RT	25	26	650				73	6		7	49	25	50		
245+20		TO	312+87		LT&RT	6,767	26	175,942	19550				1388		1650	13,196	6,767	13,534		
312+87		TO	313+12		LT&RT	25	26	650				73	6		7	49	25	50		
313+12		TO	318+47		LT&RT	535	26	13,910		1,546			110		131	1,044	535	1,070		
318+47		TO	318+72		LT&RT	25	26	650				73	6		7	49	25	50		
318+72		TO	341+58		LT&RT	2,286	26	59,436	6604				469		558	4,458	2,286	4,572		
341+58		TO	341+83.		LT&RT	25	26	650				73	6		7	49	25	50		
341+83		TO	346+76.		LT&RT	493	26	12,818		1,425			102		121	962	493	986		
346+76		TO	347+01.		LT&RT	25	26	650				73	6		7	49	25	50		
347+01			371+39.04	BK	LT&RT	2,438	26	63,390	7044				500		595	4,755	2,438	4,877		
371+39.04	BK	TO	371+61.05	AH		STATION EQUATION														EQ
371+61.05	AH	TO	477+53		LT&RT	10,592	26	275,391	30599				2172		2583	20,655	10,592	21,184		WILL./JOHN. CO. STA 432+25
477+53		TO	477+78		LT&RT	25	26	650				73	6		7	49	25	50		
477+78		TO	478+78		LT&RT	100	26	2,600		289			21		25	195	100	200		
478+78		TO	479+03		LT&RT	25	26	650				73	6		7	49	25	50		
479+03		TO	503+29.10	BK	LT&RT	2,426	26	63,079	7009				498		592	4,731	2,426	4,853		
503+29.10	BK	TO	502+63.20	AH		STATION EQUATION														EQ
502+63.20	AH	TO	523+69.42	BK	LT&RT	2,106	26	54,762	6085				432		514	4,108	2,106	4,213		
523+69.42	BK	TO	519+94.37	AH		STATION EQUATION														EQ
519+94.37	AH	TO	522+22		LT&RT	228	26	5,919	658				47		56	444	228	456		
522+22		TO	522+47		LT&RT	25	26	650				73	6		7	49	25	50		
522+47		TO	524+08		LT&RT	161	26+VAR	7,404		823			58		70	556	161	322	279	
SUBTOTAL									77,664	10,000	0	584	6,264	0	7461	59,569	30,420	60,845	335	
TOTAL									121,639	22,024	2,295	1,510	7,189	5,917	12,465	99,539	51,215	102,440	372	

MODEL: MAINLINE SCHEDULE-2 [Sheet]
FILE NAME: c:\pw_work\pwidot\whitedel\d1066570\D978A74-SHE-Schedules.dgn

USER NAME = dylan.white	DESIGNED -	REVISED -	STATE OF ILLINOIS DEPARTMENT OF TRANSPORTATION
	DRAWN -	REVISED -	
	CHECKED -	REVISED -	
PLOT DATE = 5/14/2025	DATE -	REVISED -	

MAINLINE RESURFACING SCHEDULE CONTINUED

SCALE: SHEET 2 OF 12 SHEETS STA. TO STA.

F.A.S RTE.	SECTION	COUNTY	TOTAL SHEETS	SHEET NO.
904	101RS-6	*	40	16

CONTRACT NO. 78A74

ILLINOIS FED. AID PROJECT

*JOHNSON/WILLIAMSON

IL 166 (FAS 904) SHOULDER SCHEDULE

LOCATION STATION TO STATION						LENGTH	SHOULDER WIDTH	SHOULDER AREA	HMA SURFACE REMOVAL 2 3/4"	AGG. WEDGE SHOULDER TYPE-B	HMA SHOULDERS (2 3/4")	BITUMINOUS MATERIALS (TACK COAT)	REMARKS
						FOR INFORMATIONAL PURPOSES ONLY							
IL 166 (FAS 904)						FEET	FEET	SQ FT	SQ YD	TON	TON	POUND	
14+99		TO	41+02		LT&RT	2603	2	10412		85			CANAVILLE RD.
41+02		TO	44+50		LT&RT	348	2	1392					INLAY SN 100-7057
44+50		TO	50+81.93	BK	LT&RT	632	2	2528		22			
50+81.93	BK	TO	50+95.49	AH	LT&RT	STATION EQUATION							STATION EQUATION
50+95.49	AH	TO	98+14		LT&RT	4719	2	18876		164			
98+14		TO	102+60		LT&RT	446	2	1784					INLAY SN 100-7054
102+60		TO	136+57.10	BK	LT&RT	3398	2	13592		113			DONNELSON LN/ATLANTA LN
136+57.10	BK	TO	136+62.20	AH	LT&RT	STATION EQUATION							STATION EQUATION
136+62.20	AH	TO	175+00		LT&RT	3838	2	15352		129			BOUNDARY RD
175+00		TO	178+58		LT&RT	358	2	1432					INLAY SN 100-7052
178+58		TO	182+11		LT&RT	353	2	1412		8			
182+11		TO	188+50.30	BK	LT&RT	640	2	2560					INLAY
188+50.30	BK	TO	188+54.57	AH	LT&RT	STATION EQUATION							STATION EQUATION
188+54.57	AH	TO	229+61.14	BK	LT&RT	4107	2	16428					INLAY
229+61.14	BK	TO	229+77.65	AH	LT&RT	STATION EQUATION							STATION EQUATION
229+77.65	AH	TO	241+73.17		LT&RT	1196	2	4784					
241+73.17		TO	242+46.83		LT&RT	GAP SN 100-0031							SN 100-0031
242+46.83		TO	244+95		LT&RT	249	2	996					INLAY
244+95		TO	313+12		LT&RT	6817	2	27268		146			SUGAR SPR/FREE SLVR RD
313+12		TO	316+52		RT	340	3-VAR	1,214	135		21	92	HMA SHLD SN100-7050&7049
313+12		TO	315+07		LT	195	2	390					
315+07		TO	318+47		LT	340	3-VAR	1,214	135		21	92	HMA SHLDR SN100-7049
316+52		TO	318+47		RT	195	2	390					
318+47		TO	341+83		LT&RT	2336	2	9,344		51			
341+83		TO	345+34		RT	351	3-VAR	836	93		15	63	GAP PCC SHLDR 100' SN100-7048
341+83			343+28		LT	145	2	290					
343+28		TO	346+76		LT	348	3-VAR	836	93		15	63	GAP PCC SHLDR 100' SN100-7048
345+34		TO	346+76		RT	142	2	284					
346+76		TO	371+39.04	BK	LT&RT	2464	2	9856		54			
371+39.04	BK	TO	371+61.05	AH	LT&RT	STATION EQUATION							STATION EQUATION
371+61.05		TO	477+78		LT&RT	10617	2	42468		228			BOST ORCHARD/DRAKE/TURNER RD
477+78		TO	478+78		LT&RT	100	2	400					INLAY SN 044-7030
478+78		TO	503+29.10	BK	LT&RT	2452	2	9808		52			PARKER CITY RD/VINE ST
503+29.10	BK	TO	502+63.20	AH	LT&RT	STATION EQUATION							STATION EQUATION
502+63.20	AH	TO	523+69.42	BK	LT&RT	2107	2	8428		43			OAK TREE LN/E.2ND ST/MULBERRY DR
523+69.42	BK	TO	519+94.37	AH	LT&RT	STATION EQUATION							STATION EQUATION
519+94.37	AH	TO	522+47		LT&RT	253	2	1012		6			
522+47		TO	524+08		LT&RT	161	2	644					INLAY TO US 45
TOTAL									456	1,101	72	310	

MODEL: SHOULDER SCHEDULE [Sheet]
FILE NAME: c:\pw_work\pwidot\whitedel\d1066570\D978A74-SHE-Schedules.dgn

USER NAME = dylan.white	DESIGNED -	REVISED -	STATE OF ILLINOIS DEPARTMENT OF TRANSPORTATION
	DRAWN -	REVISED -	
	CHECKED -	REVISED -	
PLOT DATE = 5/12/2025	DATE -	REVISED -	

SHOULDER SCHEDULE

SCALE: SHEET 3 OF 12 SHEETS STA. TO STA.

F.A.S RTE.	SECTION	COUNTY	TOTAL SHEETS	SHEET NO.
904	101RS-6	*	40	17
		CONTRACT NO. 78A74		
		ILLINOIS FED. AID PROJECT		

*JOHNSON/WILLIAMSON

IL 166 (FAS 904) ENTRANCE AND SIDEROAD SCHEDULE

LOCATION			EXISTING SURFACE TYPE	WIDTH AT EOP	WIDTH AT 15' OFFSET	WIDTH AT 4' OFFSET	AVERAGE WIDTH	PROPOSED AREA	INCIDENTAL HMA SURFACING	BITUMINOUS MATERIAL (TACK COAT)	HMA SURFACE REMOVAL - BUTT JOINT	TEMP RAMP	REMARKS
IL 166 (FAS 904)			FOR INFORMATIONAL PURPOSES ONLY										
SIDE	STATION	ENTRANCE TYPE		FT	FT	FT	FT	SQ YD	TONS	POUNDS	SQ YD	SQ YD	
RT	16+68	PRIVATE	AGG										
RT	34+39	SIDE ROAD	HMA	85	43		64	107	14	48	107	10	CANAVILLE RD
LT	34+39	SIDE ROAD	HMA	77	38		58	97	13	44	97	9	CANAVILLE RD
RT	37+98	PRIVATE	AGG										
LT	43+07	PRIVATE	AGG	48								6	INLAY
LT	48+87	PRIVATE	HMA	27		22	25	12	2	5		3	
EQ STA 50+81.93 BK = STA 50+95.49 AH													
LT	53+18	PRIVATE	HMA	23		17	20	9	2	4		3	
LT	58+18	PRIVATE	AGG										
RT	61+85	PRIVATE	AGG										
LT	62+23	PRIVATE	AGG										
RT	65+91	PRIVATE	AGG										
RT	67+84	PRIVATE	AGG										
LT	69+61	PRIVATE	AGG										
RT	73+24	PRIVATE	AGG										
LT	73+40	COMMERCIAL	AGG										
LT	75+40	COMMERCIAL	AGG	32		27	30	14	2	6			EX. HMA INCIDENTAL
LT	80+03	FIELD ENTRANCE	AGG										
RT	81+27	PRIVATE	AGG										
RT	91+17	FIELD ENTRANCE	AGG										
RT	92+58	PRIVATE	AGG										
RT	95+87	PRIVATE	AGG										
LT	102+22	SIDE ROAD	AGG	27	13		20	34				3	INLAY
RT	102+34	SIDE ROAD	HMA	50	26		38	64				6	INLAY
LT	105+55	PRIVATE	AGG										
LT	106+93	FIELD ENTRANCE	AGG										
LT	108+92	PRIVATE	AGG										
RT	115+22	PRIVATE	AGG										
LT	115+94	PRIVATE	HMA	26		21	24	11	2	5		3	
LT	117+33	PRIVATE	AGG										
RT	120+63	SIDE ROAD	HMA	53	23		38	64	8	29	64	6	DENNELSON LN.
LT	124+69	PRIVATE	HMA	22		15	19	9	2	4		3	
LT	125+73	PRIVATE	AGG										
RT	131+15	SIDE ROAD	HMA	52	26		39	65	9	30	65	6	ATLANTA LN
LT	134+80	PRIVATE	AGG										
EQ STA 136+57.10 BK = STA 136+62.20 AH													
RT	137+06	PRIVATE	AGG	44		36	40	18	3	8			EX.HMA INCIDENTAL
LT	139+61	PRIVATE	AGG										
LT	141+48	PRIVATE	AGG										
RT	146+97	PRIVATE	HMA	42		37	40	18	3	8		5	
LT	146+97	SIDE ROAD	HMA	93	44		69	115	15	52	115	11	W.BOUNDRY RD.
LT	151+08	PRIVATE	AGG										
LT	153+45	PRIVATE	HMA	25		18	22	10	2	5		3	
RT	153+45	PRIVATE	AGG										
SUB-TOTAL									77	248	448	77	

MODEL: ENTRANCE AND SIDEROAD SCHEDULE-1 [Sheet]
FILE NAME: c:\pw_work\pwidot\whitlede\d1066570\D978A74-SHE-Schedules.dgn

USER NAME = dylan.white	DESIGNED -	REVISED -	STATE OF ILLINOIS DEPARTMENT OF TRANSPORTATION
	DRAWN -	REVISED -	
	CHECKED -	REVISED -	
PLOT DATE = 5/12/2025	DATE -	REVISED -	

ENTRANCE AND SIDEROAD SCHEDULE

SCALE: SHEET 4 OF 12 SHEETS STA. TO STA.

F.A.S RTE.	SECTION	COUNTY	TOTAL SHEETS	SHEET NO.
904	101RS-6	*	40	18

CONTRACT NO. 78A74

ILLINOIS | FED. AID PROJECT

*JOHNSON/WILLIAMSON

IL 166 (FAS 904) ENTRANCE AND SIDEROAD SCHEDULE CONTINUED

LOCATION			EXISTING SURFACE TYPE	WIDTH AT EOP	WIDTH AT 15' OFFSET	WIDTH AT 4' OFFSET	AVERAGE WIDTH	PROPOSED AREA	INCIDENTAL HMA SURFACING	BITUMINOUS MATERIAL (TACK COAT)	HMA SURFACE REMOVAL - BUTT JOINT	TEMP RAMP	REMARKS
IL 166 (FAS 904)			FOR INFORMATIONAL PURPOSES ONLY										
SIDE	STATION	ENTRANCE TYPE		FT	FT	FT	FT	SQ YD	TONS	POUNDS	SQ YD	SQ YD	
LT	170+79	PRIVATE	AGG										
RT	170+87	PRIVATE	AGG										
LT	180+00	PRIVATE	AGG										
RT	182+91	SIDE ROAD	HMA	129	71		100	167				15	INLAY
LT	187+38	SIDE ROAD	HMA	86	40		63	105				10	INLAY
EQ STA 188+50.30 BK = STA 188+54.57 AH													STATION EQ
RT	192+38	PRIVATE	AGG	15								2	
LT	192+76	PRIVATE	AGG	15								2	INLAY
RT	194+47	PRIVATE	HMA	15								2	INLAY
LT	196+52	PRIVATE	HMA	15								2	INLAY
RT	197+39	PRIVATE	HMA	15								2	INLAY
LT	197+60	PRIVATE	AGG	15								2	INLAY
RT	199+11	SIDE ROAD	HMA	36	23		30					4	S. LOGAN ST.
RT	201+37	COMMERCIAL	PCC	62								7	DOLLAR GEN
LT	201+37	SIDE ROAD	HMA	35	31		33					4	N.RAILROAD ST.
LT	201+53	COMMERCIAL	HMA	34								4	INLAY
RT	202+08	PRIVATE	HMA	14								2	INLAY
LT	204+39	PRIVATE	HMA	15								2	INLAY
RT	204+39	PRIVATE	HMA	17								2	INLAY
RT	204+77	PRIVATE	HMA	18								2	INLAY
LT	205+29	PRIVATE	HMA	14								2	INLAY
RT	205+82	SIDE ROAD	HMA	28								4	RAVINE ST
LT	205+93	PRIVATE	HMA	17								2	INLAY
LT	206+89	PRIVATE	HMA	14								2	INLAY
RT	207+14	PRIVATE	HMA	16								2	INLAY
LT	207+92	PRIVATE	HMA	15								2	INLAY
RT	208+46	SIDE ROAD	HMA	28								4	1ST ST.
LT	209+45	COMMERCIAL	HMA	20								3	INLAY
RT	209+79	COMMERCIAL	PCC	20								3	INLAY/BANK
RT	210+32	COMMERCIAL	PCC	38								5	INLAY/BANK
LT	210+32	COMMERCIAL	HMA	38								5	INLAY
LT	211+10	SIDE ROAD	HMA	24	23		24					3	INLAY/JOHNSON ST
RT	211+10	SIDE ROAD	HMA	22	22		22					3	INLAY/S.BROWN ST
LT	212+25	COMMERCIAL	HMA	35								4	INLAY/POST OFFICE
RT	212+77	COMMERCIAL	HMA	13								2	INLAY
LT	213+74	COMMERCIAL	HMA	30								4	INLAY
RT	214+47	SIDE ROAD	HMA	34	30		32					4	INLAY/S LINE ST
LT	214+70	SIDE ROAD	HMA	25	22		24					3	INLAY/N LINE ST
LT	215+43	SIDE ROAD	HMA	127		119	123					15	INLAY/E KEELY ST.
RT	216+12	COMMERCIAL	AGG	78								9	INLAY
LT	220+75	SIDE ROAD	HMA	36	23		30					4	INLAY/N GARFIELD ST
RT	220+75	SIDE ROAD	HMA	26	18		22					3	INLAY/GARFIELD ST
RT	222+02	PRIVATE	AGG	65								8	INLAY
LT	222+59	COMMERCIAL	AGG	36								4	INLAY
LT	223+43	SIDE ROAD	HMA	53	34		44					6	INLAY/OTRICH ST
RT	223+43	SIDE ROAD	HMA	34	22		28					4	INLAY/S BROAD ST
LT	228+00	PRIVATE	AGG	40								5	INLAY
EQ STA 229+61.14 BK = STA 229+77.65 AH													INLAY
RT	229+50	SIDE ROAD	HMA	72	40		56					8	INLAY/WALNUT ST
RT	231+80	PRIVATE	AGG	35								4	INLAY
RT	238+20	PRIVATE	AGG	35								4	INLAY
SUB - TOTAL									0	0	0	195	

MODEL: ENTRANCE AND SIDEROAD SCHEDULE-2 [Sheet]
FILE NAME: c:\pw_work\pwidot\whitedel\d1066570\D978A74-Sht-Schedules.dgn

USER NAME = dylan.white	DESIGNED -	REVISED -	STATE OF ILLINOIS DEPARTMENT OF TRANSPORTATION
	DRAWN -	REVISED -	
	CHECKED -	REVISED -	
PLOT DATE = 5/12/2025	DATE -	REVISED -	

ENTRANCE AND SIDEROAD SCHEDULE CONTINUED

SCALE: SHEET 5 OF 12 SHEETS STA. TO STA.

F.A.S RTE.	SECTION	COUNTY	TOTAL SHEETS	SHEET NO.
904	101RS-6	*	40	19

CONTRACT NO. 78A74

ILLINOIS FED. AID PROJECT

*JOHNSON/WILLIAMSON

IL 166 (FAS 904) ENTRANCE AND SIDEROAD SCHEDULE CONTINUED

LOCATION			EXISTING SURFACE TYPE	WIDTH AT EOP	WIDTH AT 15' OFFSET	WIDTH AT 4' OFFSET	AVERAGE WIDTH	PROPOSED AREA	INCIDENTAL HMA SURFACING	BITUMINOUS MATERIAL (TACK COAT)	HMA SURFACE REMOVAL - BUTT JOINT	TEMP RAMP	REMARKS
IL 166 (FAS 904)				FOR INFORMATIONAL PURPOSES ONLY									
SIDE	STATION	ENTRANCE TYPE		FT	FT	FT	FT	SQ YD	TONS	POUNDS	SQ YD	SQ YD	
RT	260+36	PRIVATE	HMA	35		28	32	15	1	7			
LT	264+88	PRIVATE	AGG										
RT	270+06	SIDE RAOD	HMA	45	19		32	54	4	24	54	5	SUGAR SPRINGS RD.
RT	271+53	PRIVATE	AGG	25		20	23	11	1	5			EX. HMA APRON
RT	278+66	PRIVATE	AGG	31		26	29	13	1	6			EX. HMA APRON
LT	282+35	PRIVATE	AGG										
LT	287+10	PRIVATE	AGG										
LT	292+92	PRIVATE	AGG										
LT	294+31	PRIVATE	AGG	58		47	53	24	2	11			EX. HMA APRON
RT	297+71	SIDE RAOD	HMA	77	37		57	26	7	43	26	9	FREE SILVER LN.
LT	298+93	PRIVATE	AGG	31		22	27	12	1	6			EX. HMA APRON
LT	307+14	PRIVATE	AGG	35		26	31	14	1	7			EX. HMA APRON
LT	312+59	PRIVATE	AGG										
LT	323+57	FIELD	AGG										
LT	324+63	FIELD	AGG										
RT	327+97	PRIVATE	HMA	27		20	24	11	1	5			
LT	328+49	PRIVATE	AGG										
RT	329+60	PRIVATE	AGG										
LT	329+60	PRIVATE	AGG										
LT	335+53	PRIVATE	AGG										
RT	336+70	PRIVATE	AGG										
RT	337+32	PRIVATE	AGG										
LT	337+79	PRIVATE	AGG										
RT	339+06	PRIVATE	AGG										
LT	339+63	PRIVATE	AGG	50		40	45	20	2	9			EX. HMA APRON
RT	340+30	PRIVATE	AGG										
RT	350+69	PRIVATE	AGG										
LT	351+03	SIDE RAOD	HMA	55	23		39	18	2	8	18	7	TYLER BRIDGE RD.
LT	354+23	PRIVATE	AGG										
RT	358+75	PRIVATE	AGG										
RT	361+74	PRIVATE	AGG										
RT	369+46	PRIVATE	AGG	22		16	19	9	1	4			EX. HMA APRON
EQ STA 371+39.04 BK = STA 371+61.05 AH													
RT	372+19	PRIVATE	AGG	42		34	38	17	2	8			EX. HMA APRON
LT	374+01	PRIVATE	AGG										
RT	377+30	PRIVATE	AGG	32		25	29	13	1	6			EX. HMA APRON
LT	385+41	SIDE RAOD	HMA	113	59		86	144	11	65	144	13	BOST ORCHARD RD.
LT	390+97	FIELD	AGG										
RT	391+49	PRIVATE	AGG	124		105	115	52	4	23			EX. HMA APRON
LT	392+83	PRIVATE	AGG										
LT	400+21	PRIVATE	AGG	35		22	29	13	1	6			EX. HMA APRON
RT	401+03	PRIVATE	AGG	38		26	32	15	1	7			EX. HMA APRON
LT	402+04	PRIVATE	AGG										
LT	405+16	PRIVATE	HMA	37		27	32	15	1	7			
SUB-TOTAL									45	257	242	34	

MODEL: ENTRANCE AND SIDEROAD SCHEDULE-3 [Sheet]
FILE NAME: c:\pw_work\pwidot\whitlede\d1066570\D978A74-SHE-Schedules.dgn

USER NAME = dylan.white	DESIGNED -	REVISED -	STATE OF ILLINOIS DEPARTMENT OF TRANSPORTATION
	DRAWN -	REVISED -	
	CHECKED -	REVISED -	
PLOT DATE = 5/12/2025	DATE -	REVISED -	

ENTRANCE AND SIDEROAD SCHEDULE CONTINUED

SCALE: SHEET 6 OF 12 SHEETS STA. TO STA.

F.A.S RTE.	SECTION	COUNTY	TOTAL SHEETS	SHEET NO.
904	101RS-6	*	40	20

CONTRACT NO. 78A74

ILLINOIS FED. AID PROJECT

*JOHNSON/WILLIAMSON

IL 166 (FAS 904) ENTRANCE AND SIDEROAD SCHEDULE CONTINUED

LOCATION			EXISTING SURFACE TYPE	WIDTH AT EOP	WIDTH AT 15' OFFSET	WIDTH AT 4' OFFSET	AVERAGE WIDTH	PROPOSED AREA	INCIDENTAL HMA SURFACING	BITUMINOUS MATERIAL (TACK COAT)	HMA SURFACE REMOVAL - BUTT JOINT	TEMP RAMP	REMARKS
IL 166 (FAS 904)			FOR INFORMATIONAL PURPOSES ONLY										
SIDE	STATION	ENTRANCE TYPE		FT	FT	FT	FT	SQ YD	TONS	POUNDS	SQ YD	SQ YD	
RT	406+00	PRIVATE	HMA	33		23	28	13	1	6			
RT	413+10	PRIVATE	AGG										
RT	416+93	FIELD ENTRANCE	AGG										
LT	418+08	SIDE ROAD	HMA	67	33		50	84	6	38	84	8	DRAKE RD
RT	422+13	PRIVATE	AGG										
RT	424+93	PRIVATE	AGG										
LT	425+04	PRIVATE	HMA	30		21	26	12	1	6			
LT	426+34	PRIVATE	AGG	33		24	29	13	1	6			EX. HMA APRON
LT	429+18	PRIVATE	AGG										
LT	430+89	PRIVATE	AGG										
432+25 WILLIAMSON/JOHNSON COUNTY LINE													
LT	438+30	PRIVATE	AGG	27		17	22	10	1	5			EX. HMA APRON
RT	439+74	FIELD ENTRANCE	AGG										
RT	448+48	PRIVATE	AGG	133		120	127	57	4	26			EX. HMA APRON
RT	450+25	PRIVATE	AGG	42		32	37	17	5	8			EX. HMA APRON
LT	454+32	PRIVATE	AGG										
RT	457+94	SIDE ROAD	HMA	66	32		49	82	6	37	82	8	TURNER RD
LT	458+25	PRIVATE	AGG										
RT	485+69	SIDE ROAD	HMA	51	24		38	64	5	29	64	6	PARKER CITY RD
RT	490+11	PRIVATE	AGG	32		23	28	13	1	6			EX. HMA APRON
RT	490+73	PRIVATE	AGG	32		23	28	13	1	6			EX. HMA APRON
LT	494+85	PRIVATE	AGG										
LT	501+30	PRIVATE	AGG										
RT	503+10	SIDE ROAD	HMA	57	28		43	72	6	33	72	7	VINE ST.
LT	504+31	PRIVATE	AGG	45		33	39	18	2	8			EX. HMA APRON
LT	501+82	SIDE ROAD	HMA	57	28		43	72	6	33	72	7	OAK TREE LN.
RT	516+16	SIDE ROAD	HMA	77	35		56	94	7	42	94	9	E. 2ND ST
LT	516+16	SIDE ROAD	AGG	45	36		41	69	5	31	69	5	E. 2ND ST
LT	516+92	SIDE ROAD	AGG	54	39		47	79	6	36	79	6	WALNUT
RT	518+09	FIELD ENTRANCE	AGG										TUNNEL HILL TRAIL
LT	518+09	FIELD ENTRANCE	AGG										TUNNEL HILL TRAIL
LT	522+00	PRIVATE	HMA	57		47	52	24	2	11			
LT	522+79	PRIVATE	HMA	52		45	49	22	2	10			
RT	523+13	SIDE ROAD	HMA	72	39		56	94	7	42	94	8	MULBERRY DR.
LT	523+51	PRIVATE	AGG										
EQ STA 523+69.42 BK = STA 519+94.94 AK													
LT	522+95	PRIVATE	AGG	53		47	50	23	2	10			SEE SHEET #39
SUB-TOTAL									77	429	710	64	
TOTAL									199	934	1400	370	

MODEL: ENTRANCE AND SIDEROAD SCHEDULE-4 [Sheet]
FILE NAME: c:\pw_work\pwidot\whitede\d1066570\D978A74-SheE-Schedules.dgn

USER NAME = dylan.white	DESIGNED -	REVISED -
	DRAWN -	REVISED -
	CHECKED -	REVISED -
PLOT DATE = 5/12/2025	DATE -	REVISED -

STATE OF ILLINOIS
DEPARTMENT OF TRANSPORTATION

ENTRANCE AND SIDEROAD SCHEDULE CONTINUED

SCALE: | SHEET 7 OF 12 SHEETS | STA. | TO STA.

F.A.S RTE.	SECTION	COUNTY	TOTAL SHEETS	SHEET NO.
904	101RS-6	*	40	21

CONTRACT NO. 78A74

ILLINOIS | FED. AID PROJECT

*JOHNSON/WILLIAMSON

SIDEWALK SCHEDULE

LOCATION	SIDEWALK REMOVAL	PCC SIDEWALK 4 INCH (SPECIAL)	DETECTABLE WARNINGS	COMMENTS
	SQ FT	SQ FT	SQ FT	
BROWN ST / JOHNSON ST & IL 166				CREAL SPRINGS
NE CORNER	32	33	10	
SE CORNER	273	313	21	
LINE ST & IL 166				CREAL SPRINGS
NW CORNER	37	40	10	
SW CORNER	334	428	20	
GARFIELD ST & IL 166				CREAL SPRINGS
SE CORNER	37	43	10	
NE CORNER	17	72	10	
BROAD ST / OTRICH ST & IL 166				CREAL SPRINGS
NW CORNER	28	154	10	
NE CORNER	20	37	8	
SW CORNER	27	28	8	
SE CORNER	24	25	8	
TOTALS	829	1173	115	

IL 166 (FAS 904)GUARDRAIL SCHEDULE

LOCATION STATION TO STATION				LENGTH	GUARDRAIL REMOVAL	TRAFFIC BARRIER TERMINAL, TYPE 1 (SPECIAL) TANGENT	TERMINAL MARKER-DIRECT APPLIED	GUARDRAIL REFLECTORS TYPE A	COMMENTS
IL 166 (FAS 904)				FOOT	FOOT	EACH	EACH	EACH	
178+01	TO	178+48	LT	47	47	1	1	1	SN 100-7052
TOTAL				47	47	1	1	1	

CONCRETE STEPS & HANDRAIL SCHEDULE

LOCATION	NUMBER OF RISERS	TRED DIMENSION	RISER DIMENSION	CONCRETE STEPS	PIPE HANDRAIL	COMMENTS
		INCH	INCH	CU YD	FOOT	
BROWN ST / JOHNSON ST & IL 166						
SE CORNER	3	11	6	0.5	9	
TOTAL	3	11	6	0.5	9	

CURB AND GUTTER SCHEDULE

LOCATION STATION TO STATON (IL 166)				GUTTER REMOVAL	CONCRETE GUTTER, TYPE B (SPECIAL)	PROTECTIVE COAT	TIE BARS 3/4"	COMMENTS
				FOOT	FOOT	SQYD	EACH	
211+29.05	TO	211+38.05	LT	9	9	2	3	JOHNSON ST
211+29.28	TO	211+39.25	RT	10	10	2	4	BROWN ST
214+13.79	TO	214+22.80	LT	10	10	2	4	LINE ST
214+14.14	TO	214+23.56	RT	10	10	2	4	LINE ST
220+92.20	TO	221+01.32	RT	10	10	2	4	GARFIELD ST
223+19.68	TO	223+28.04	RT	9	9	2	3	BROAD ST
223+68.68	TO	223+75.12	RT	7	7	2	3	BROAD ST
TOTALS				65	65	14	25	

DRAINAGE SCHEDULE

LOCATION	PIPE CULVERT, CLASS D, TYPE 1, 10"	METAL FLARED END SECTIONS 10"	FURNISHED EXCAVATION	TRENCH BACKFILL	COMMENTS
	FOOT	EACH	CU YD	CU YD	
GARFIELD ST & IL 166					CREAL SPRINGS
NE CORNER	7	2	1	1	
TOTALS	7	2	1	1	

MODEL: SIDEWALK-GUARDRAIL-CURB AND GUTTER SCHEDULE [Sheet]
FILE NAME: c:\pw_work\pwidot\white\ded\d1066570\D978A74-SHE-Schedules.dgn

USER NAME = dylan.white	DESIGNED -	REVISED -	STATE OF ILLINOIS DEPARTMENT OF TRANSPORTATION
	DRAWN -	REVISED -	
	CHECKED -	REVISED -	
PLOT DATE = 5/12/2025	DATE -	REVISED -	

SIDEWALK, GUARDRAIL, CURB AND GUTTER, DRAINAGE AND CONCRETE STEPS SCHEDULAS

SCALE: | SHEET 8 OF 12 SHEETS | STA. | TO STA.

F.A.S RTE.	SECTION	COUNTY	TOTAL SHEETS	SHEET NO.
904	101RS-6	*	40	22

CONTRACT NO. 78A74

ILLINOIS | FED. AID PROJECT

*JOHNSON/WILLIAMSON

IL 166 (FAS 904)PAVEMENT MARKING SCHEDULE

LOCATION STATION TO STATION					LENGTH	EDGE LINE OMISSIONS	PAINT PAVEMENT MARKING							RRPM		REMARKS
							LINE 4"				LINE 6"	LINE 12"	LINE 24"	RAISED REFLECTIVE PAVEMENT MARKER REMOVAL	RAISED REFLECTIVE PAVEMENT MARKER PROPOSED	
							WHITE	YELLOW			WHITE					
							SOLID	SOLID	DOUBLE	SKIP DASH	SOLID					
IL 166 (FAS 904)					FEET	FEET	FEET	FEET	FEET	FEET	FEET	FEET	FEET	EACH	EACH	
14+99		TO	17+75		276		552	276		70				4	4	
17+75		TO	22+84		509		1,018			130				7	7	
22+84		TO	42+42		1,958	160	3,596	1,958		490				25	25	CANAVILLE RD.
42+42		TO	44+18		176		352		352					3	3	
44+18		TO	45+00		82		164	82		30				2	2	
45+00		TO	50+81.93	BK	582		1,164	582		150				8	8	
50+81.93	**BK**	**TO**	**50+94.49**	**AH**	**13**	**STATION EQUATION**										
50+94.49	AH	TO	53+61		267		533	267		70				4	4	
53+61		TO	57+77		416		832		832					6	6	
57+77		TO	66+72		895		1,790	895		230				12	12	
66+72		TO	119+67		5,295	45	10,500			1,330				67	67	RALLS GROVE RD.
119+67		TO	131+34		1,167	65	2,204	1,167		300				15	15	DONNELSON LN./ATLANTA LN
131+34		TO	135+50		416		832		832					6	6	
135+50		TO	136+57.10	BK	107		214	107		30				2	2	
136+57.10	**BK**	**TO**	**136+62.20**	**AH**	**5**	**STATION EQUATION**										
136+62.20	AH	TO	144+02		740		1,480	740		190				10	10	
144+02		TO	146+06		204		408		408					3	3	
146+06		TO	153+12		706	122	1,168	706		180				9	9	BOUNDRY RD. / W. BOUNDRY RD.
153+12		TO	154+02		90		180			30				2	2	
154+02		TO	160+14		612		1,224	612		160				8	8	
160+14		TO	163+53		339		678		678					5	5	
163+53		TO	171+30		777		1,554	777		200				10	10	
171+30		TO	229+61.14	BK	5,831	3,427	4,808		11,663		44	35		73	73	LINE OMISSION CREAL SPRINGS
229+61.14	**BK**	**TO**	**229+77.65**	**AH**	**17**	**STATION EQUATION**										
229+77.65	AH	TO	232+50		272		545		545					4	4	
232+50		TO	239+70		720		1,440	720		180				9	9	
239+70		TO	243+24		354		708		708		46	35		5	5	
243+24		TO	250+06		682		1,364	682		180				9	9	
250+06		TO	255+44		538		1,076		1,076					7	7	
255+44		TO	262+64		720		1,440	720		180				9	9	
SUBTOTAL					24,765	3,819	41,824	10,291	17,094	4,130	90	70	0	324	324	

MODEL: PAVEMENT MARKING SCHEDULE-1 [Sheet]
FILE NAME: c:\pw_work\pwidot\white\d1065570\D978A74-SHE-Schedules.dgn

USER NAME = dylan.white	DESIGNED -	REVISED -	STATE OF ILLINOIS DEPARTMENT OF TRANSPORTATION
	DRAWN -	REVISED -	
	CHECKED -	REVISED -	
PLOT DATE = 5/12/2025	DATE -	REVISED -	

PAVEMENT MARKING SCHEDULE

SCALE: | SHEET 9 OF 12 SHEETS | STA. | TO STA.

F.A.S RTE.	SECTION	COUNTY	TOTAL SHEETS	SHEET NO.
904	101RS-6	*	40	23

CONTRACT NO. 78A74

ILLINOIS | FED. AID PROJECT

*JOHNSON/WILLIAMSON

IL 166 (FAS 904)PAVEMENT MARKING SCHEDULE CONTINUED

LOCATION STATION TO STATION					LENGTH	EDGE LINE OMISSIONS	PAINT PAVEMENT MARKING							RRPM		REMARKS
							LINE 4"				LINE 6"	LINE 12"	LINE 24"	RAISED REFLECTIVE PAVEMENT MARKER REMOVAL	RAISED REFLECTIVE PAVEMENT MARKER	
							WHITE	YELLOW			WHITE					
							SOLID	SOLID	DOUBLE	SKIP DASH	SOLID					
IL 166 (FAS 904)					FEET	FEET	FEET	FEET	FEET	FEET	FEET	FEET	FEET	EACH	EACH	
262+64		TO	267+04		440		880		880					6	6	
267+04		TO	273+15		611		1,222	611		160				8	8	
273+15		TO	294+39		2,124		4,248		4,248					27	27	
294+39		TO	305+56		1,117		2,234	1,117		280				14	14	
305+56		TO	318+73		1,317		2,634			330				17	17	
318+73		TO	340+90		2,217		4,434	2,217		560				28	28	
340+90		TO	342+71		181		362			50				3	3	
342+71		TO	353+73		1,102	40	2,124	1,102		280				14	14	TYLER BRIDGE RD.
353+73		TO	371+39.04	BK	1,766		3,532		3,533					23	23	
371+39.04	BK	TO	371+61.05	AH	22	STATION EQUATION										
371+61.05	AH	TO	388+23.		1,662	100	3,124		3,324					21	21	BOST ORCHARD RD.
388+23		TO	396+05		782		1,564	782		200				10	10	
396+05		TO	399+09		304		608		608					4	4	
399+09		TO	407+16		807		1,614	807		210				11	11	
407+16		TO	411+43		427		854		854					6	6	
411+43		TO	417+62		619		1,238	619		160				8	8	
417+62		TO	423+91		629	50	1,158		1,258					8	8	DRAKE RD
423+91		TO	429+42		551		1,102	551		140				7	7	
429+42		TO	434+49		507		1,014		1,014					7	7	
434+49		TO	440+91		642		1,284	642		170				9	9	
440+91		TO	450+90		999		1,998		1,998					13	13	
450+90		TO	459+92		902	50	1,704	902		230				12	12	TURNER RD.
459+92		TO	463+00		308		616			80				4	4	
463+00		TO	472+73		973		1,946	973		250				13	13	
472+73		TO	503+29.04	BK	3,056	50	6,012		6,113					39	39	VINE ST.
503+29.04	BK	TO	502+63.20	AH	-66	STATION EQUATION										
502+63.20	AH	TO	519+47		1,684	185	2,998		3,368					22	22	PARKER CITY/VINE ST/OAK TREE/E 2ND ST
519+47		TO	523+69.42	BK	422		845	423		110				6	6	
523+69.42	BK	TO	519+94.37	AH	-375	STATION EQUATION										
519+94.37	AH	TO	524+08		414		827	414		110			36	6	6	
SUBTOTAL					26,144	475	52,176	11,160	27,198	3,320	0	0	36	346	346	
TOTAL					50,909	4,294	93,999	21,451	44,292	7,450	90	70	36	670	670	
GRAND TOTAL							167,192									

MODEL: PAVEMENT MARKING SCHEDULE-2 [Sheet]
FILE NAME: c:\pw_work\pwidot\white\d1066570\D978A74-SHE-Schedules.dgn

USER NAME = dylan.white	DESIGNED -	REVISED -	STATE OF ILLINOIS DEPARTMENT OF TRANSPORTATION
	DRAWN -	REVISED -	
	CHECKED -	REVISED -	
PLOT DATE = 5/12/2025	DATE -	REVISED -	

PAVEMENT MARKING SCHEDULE CONTINUED

SCALE: | SHEET 10 OF 12 SHEETS | STA. | TO STA.

F.A.S RTE.	SECTION	COUNTY	TOTAL SHEETS	SHEET NO.
904	101RS-6	*	40	24

CONTRACT NO. 78A74

ILLINOIS | FED. AID PROJECT

*JOHNSON/WILLIAMSON

IL 166 PATCHING SCHEDULE

LOCATION	DISTANCE FROM END	LENGTH	WIDTH	AREA	CLASS C PATCHES, TYPE I 12"	CLASS C PATCHES, TYPE II 12"	CLASS C PATCHES, TYPE III 12"	CLASS C PATCHES, TYPE IV 12"	TIE BARS, 3/4"
(FOR INFORMATIONAL PURPOSES ONLY)									
NB/SB	MILE	FOOT	FOOT	SQ YD	SQ YD	SQ YD	SQ YD	SQ YD	SQ YD
NB	0.1	5	12.5	7		7			
NB	0.3	6	12.5	9		9			
NB	0.3	15	12.5	21			21		
NB	0.3	16	12.5	23			23		
NB	0.3	18	12.5	25				25	
NB	0.3	6	12.5	9		9			
NB	0.3	6	12.5	9		9			
NB	0.3	15	12.5	21			21		
NB	0.3	10	12.5	14		14			
NB	0.3	25	12.5	35				35	8
NB	0.3	10	12.5	14		14			
NB	0.3	10	12.5	14		14			
NB	0.3	10	12.5	14		14			
NB	0.4	6	12.5	9		9			
NB	0.4	6	12.5	9		9			
NB	0.4	6	12.5	9		9			
NB	0.4	6	12.5	9		9			
NB	0.4	6	12.5	9		9			
NB	0.4	12	12.5	17			17		
NB	0.4	8	12.5	12		12			
NB	0.4	10	12.5	14		14			
NB	0.4	8	12.5	12		12			
NB	0.4	24	12.5	34				34	8
NB	0.4	8	12.5	12		12			
NB	0.5	10	12.5	14		14			
NB	0.5	8	12.5	12		12			
NB	0.5	10	12.5	14		14			
NB	0.5	6	12.5	9		9			
NB	0.5	12	12.5	17			17		
NB	0.6	8	12.5	12		12			
NB	0.6	10	12.5	14		14			
NB	0.6	12	12.5	17			17		
NB	0.6	12	12.5	17			17		
NB	0.6	12	12.5	17			17		
NB	0.6	6	12.5	9		9			
NB	0.7	10	12.5	14		14			
NB	0.7	6	12.5	9		9			
NB	0.7	20	6	14		14			7
NB	0.7	30	12.5	42				42	10
NB	0.7	30	6	20			20		10
NB	0.8	6	12.5	9		9			
NB	0.8	6	12.5	9		9			
NB	0.8	12	12.5	17			17		
NB	0.8	25	6	17			17		8
NB	0.9	10	12.5	14		14			
NB	0.9	8	12.5	12		12			
NB	0.9	12	12.5	17			17		
NB	0.9	12	12.5	17			17		
NB	1.0	25	12.5	35				35	8
NB	1.1	10	12.5	14		14			
NB	1.2	6	12.5	9		9			
NB	1.2	8	12.5	12		12			
NB	1.4	20	6	14		14			7
NB	1.5	20	6	14		14			7
SUBTOTAL				822		413	238	171	73

IL 166 PATCHING SCHEDULE CONTINUED

LANE	DISTANCE FROM END	LENGTH	WIDTH	AREA	CLASS C PATCHES, TYPE I 12"	CLASS C PATCHES, TYPE II 12"	CLASS C PATCHES, TYPE III 12"	CLASS C PATCHES, TYPE IV 12"	TIE BARS, 3/4"
(FOR INFORMATIONAL PURPOSES ONLY)									
NB/SB	MILE	FOOT	FOOT	SQ YD	SQ YD	SQ YD	SQ YD	SQ YD	SQ YD
NB	1.8	30	6	20			20		10
NB	2.6	6	12.5	9		9			
NB	3.1	10	6	7		7			
NB	3.1	6	12.5	9		9			
NB	3.2	10	12.5	14		14			
NB	3.3	30	6	20			20		10
NB	3.5	6	12.5	9		9			
NB	3.5	12	12.5	17			17		
NB	3.5	10	11	13		13			
NB	3.5	12	11	15			15		
NB	3.7	8	11	10		10			
NB	3.7	6	11	8		8			
NB	3.8	6	12	8		8			
NB	3.9	6	11	8		8			
NB	3.9	6	11	8		8			
NB	3.9	30	6	20			20		10
NB	4.0	6	12.5	9		9			
NB	4.1	6	12.5	9		9			
NB	4.2	10	12.5	14		14			
NB	4.2	8	12.5	12		12			
NB	4.2	20	12.5	28				28	7
NB	4.3	30	12.5	42				42	10
NB	4.3	30	12.5	42				42	10
NB	4.3	30	6	20			20		10
NB	4.4	6	12.5	9		9			
NB	6.5	20	6	14		14			7
NB	7.3	6	12.5	9		9			
NB	8.5	5	12.5	7		7			
NB	8.8	6	12.5	9		9			
NB	8.8	6	12.5	9		9			
NB	9.2	5	12.5	7		7			
NB	9.2	5	12.5	7		7			
SB	0.1	6	12.5	9		9			
SB	0.2	6	12.5	9		9			
SB	0.3	6	12.5	9		9			
SB	0.3	15	12.5	21			21		
SB	0.3	20	6	14		14			7
SB	0.3	6	6	4	4				
SB	0.3	15	6	10		10			
SB	0.3	8	12.5	12		12			
SB	0.3	15	6	10		10			
SB	0.3	25	6	17			17		8
SB	0.3	10	6	7		7			
SB	0.3	27	6	18			18		9
SB	0.3	10	12.5	14		14			
SB	0.3	6	12.5	9		9			
SB	0.3	10	12.5	14		14			
SB	0.3	10	12.5	14		14			
SB	0.3	12	12.5	17			17		
SB	0.4	6	12.5	9		9			
SB	0.4	6	12.5	9		9			
SB	0.4	6	12.5	9		9			
SB	0.4	66	12.5	92				92	22
SB	0.4	10	12.5	14		14			
SUBTOTAL				783	4	390	185	204	120

MODEL: PATCHING SCHEDULE-1 [Sheet]
FILE NAME: c:\pw_work\pwidot\whitedel\d1066570\D978A74-SheetIles.dgn

USER NAME = dylan.white	DESIGNED -	REVISED -	
	DRAWN -	REVISED -	
	CHECKED -	REVISED -	
PLOT DATE = 5/12/2025	DATE -	REVISED -	

STATE OF ILLINOIS
DEPARTMENT OF TRANSPORTATION

PATCHING SCHEDULE

SCALE: | SHEET 11 OF 12 SHEETS | STA. | TO STA.

F.A.S RTE.	SECTION	COUNTY	TOTAL SHEETS	SHEET NO.
904	101RS-6	*	40	25

CONTRACT NO. 78A74

ILLINOIS | FED. AID PROJECT

*JOHNSON/WILLIAMSON

IL 166 PATCHING SCHEDULE CONTINUED

LANE	DISTANCE FROM END	LENGTH	WIDTH	AREA	CLASS C PATCHES, TYPE I 12"	CLASS C PATCHES, TYPE II 12"	CLASS C PATCHES, TYPE III 12"	CLASS C PATCHES, TYPE IV 12"	TIE BARS, 3/4"
(FOR INFORMATIONAL PURPOSES ONLY)									
NB/SB	MILE	FOOT	FOOT	SQ YD	SQ YD	SQ YD	SQ YD	SQ YD	SQ YD
SB	0.4	10	12.5	14		14			
SB	0.4	8	12.5	12		12			
SB	0.4	24	12.5	34				34	8
SB	0.4	6	10	7		7			
SB	0.5	20	6	14		14			7
SB	0.5	6	12.5	9		9			
SB	0.5	25	12.5	35				35	8
SB	0.5	25	12.5	35				35	8
SB	0.5	25	6	17			17		8
SB	0.5	6	12.5	9		9			
SB	0.5	6	12.5	9		9			
SB	0.5	6	12.5	9		9			
SB	0.5	6	12.5	9		9			
SB	0.5	12	12.5	17			17		
SB	0.6	15	12.5	21			21		
SB	0.6	8	12.5	12		12			
SB	0.6	10	12.5	14		14			
SB	0.6	12	12.5	17			17		
SB	0.6	12	12.5	17			17		
SB	0.6	12	12.5	17			17		
SB	0.6	6	12.5	9		9			
SB	0.7	8	12.5	12		12			
SB	0.7	25	12.5	35				35	8
SB	0.7	35	6	24			24		12
SB	0.8	15	12.5	21			21		
SB	0.8	6	12.5	9		9			
SB	0.8	6	12.5	9		9			
SB	0.8	25	6	17			17		8
SB	0.9	30	6	20			20		10
SB	0.9	10	12.5	14		14			
SB	0.9	6	12.5	9		9			
SB	0.9	12	12.5	17			17		
SB	0.9	30	6	20			20		10
SB	0.9	30	6	20			20		10
SB	0.9	30	6	20			20		10
SB	1.0	30	12.5	42				42	10
SB	1.0	6	12.5	9		9			
SB	1.0	21	7	17			17		7
SB	1.0	30	12.5	42				42	10
SB	1.0	6	6	4	4				
SB	1.0	57	6	38				38	19
SB	1.0	10	6	7		7			
SB	1.0	6	12.5	9		9			
SB	1.0	10	7	8		8			
SB	1.0	10	4	4	4				
SB	1.0	10	7	8		8			
SB	1.1	6	8	6		6			
SB	1.1	12	6	8		8			
SB	1.1	30	6	20			20		10
SB	1.2	6	12.5	9		9			
SB	1.2	20	6	14		14			7
SB	1.2	6	12.5	9		9			
SB	1.2	8	12.5	12		12			
SB	1.2	20	6	14		14			7
SUBTOTAL				864	8	293	302	261	177

IL 166 PATCHING SCHEDULE CONTINUED

LANE	DISTANCE FROM END	LENGTH	WIDTH	AREA	CLASS C PATCHES, TYPE I 12"	CLASS C PATCHES, TYPE II 12"	CLASS C PATCHES, TYPE III 12"	CLASS C PATCHES, TYPE IV 12"	TIE BARS, 3/4"
(FOR INFORMATIONAL PURPOSES ONLY)									
NB/SB	MILE	FOOT	FOOT	SQ YD	SQ YD	SQ YD	SQ YD	SQ YD	SQ YD
SB	1.2	6	12.5	9		9			
SB	1.2	12	12.5	17			17		
SB	1.3	6	12.5	9		9			
SB	1.3	20	12.5	28				28	7
SB	1.3	20	6	14		14			7
SB	1.3	6	8	6		6			
SB	1.4	20	8	18			18		7
SB	1.5	30	8	27				27	10
SB	1.6	20	4	9		9			7
SB	1.6	30	8	27				27	10
SB	1.8	10	8	9		9			
SB	1.8	15	8	14		14			
SB	1.9	10	8	9		9			
SB	2.0	8	7	7		7			
SB	2.0	20	5	12		12			7
SB	2.1	15	6	10		10			
SB	2.1	10	6	7		7			
SB	2.1	6	12.5	9		9			
SB	2.1	6	12.5	9		9			
SB	2.6	6	12.5	9		9			
SB	3.0	8	6	6		6			
SB	3.1	20	6	14		14			7
SB	3.2	10	12.5	14		14			
SB	3.2	10	12.5	14		14			
SB	3.3	8	12.5	12		12			
SB	3.3	6	12.5	9		9			
SB	3.3	6	12.5	9		9			
SB	3.4	12	12.5	17			17		
SB	3.5	6	11	8		8			
SB	3.7	6	11	8		8			
SB	3.7	6	11	8		8			
SB	3.8	6	11	8		8			
SB	3.9	6	11	8		8			
SB	4.2	6	12.5	9		9			
SB	4.2	8	12.5	12		12			
SB	4.3	8	12.5	12		12			
SB	4.4	6	12.5	9		9			
SB	7.3	6	12.5	9		9			
SB	8.5	5	12.5	7		7			
SB	8.5	5	12.5	7		7			
SB	9.2	5	12.5	7		7			
SUBTOTAL				466	0	332	52	82	62
TOTAL				2,935	12	1,428	777	718	432
TOTAL WITH 10% GROWTH FACTOR				3,229	13	1,571	855	790	

MODEL: PATCHING SCHEDULE-2 [Sheet]
FILE NAME: c:\pw_work\pwidot\whitedel\d1066570\D978A74-SHE-Schedules.dgn

USER NAME = dylan.white	DESIGNED -	REVISED -	
	DRAWN -	REVISED -	
	CHECKED -	REVISED -	
PLOT DATE = 5/12/2025	DATE -	REVISED -	

STATE OF ILLINOIS
DEPARTMENT OF TRANSPORTATION

PATCHING SCHEDULE CONTINUED

SCALE: | SHEET 12 OF 12 SHEETS | STA. | TO STA.

F.A.S RTE.	SECTION	COUNTY	TOTAL SHEETS	SHEET NO.
904	101RS-6	*	40	26

CONTRACT NO. 78A74

ILLINOIS | FED. AID PROJECT

*JOHNSON/WILLIAMSON

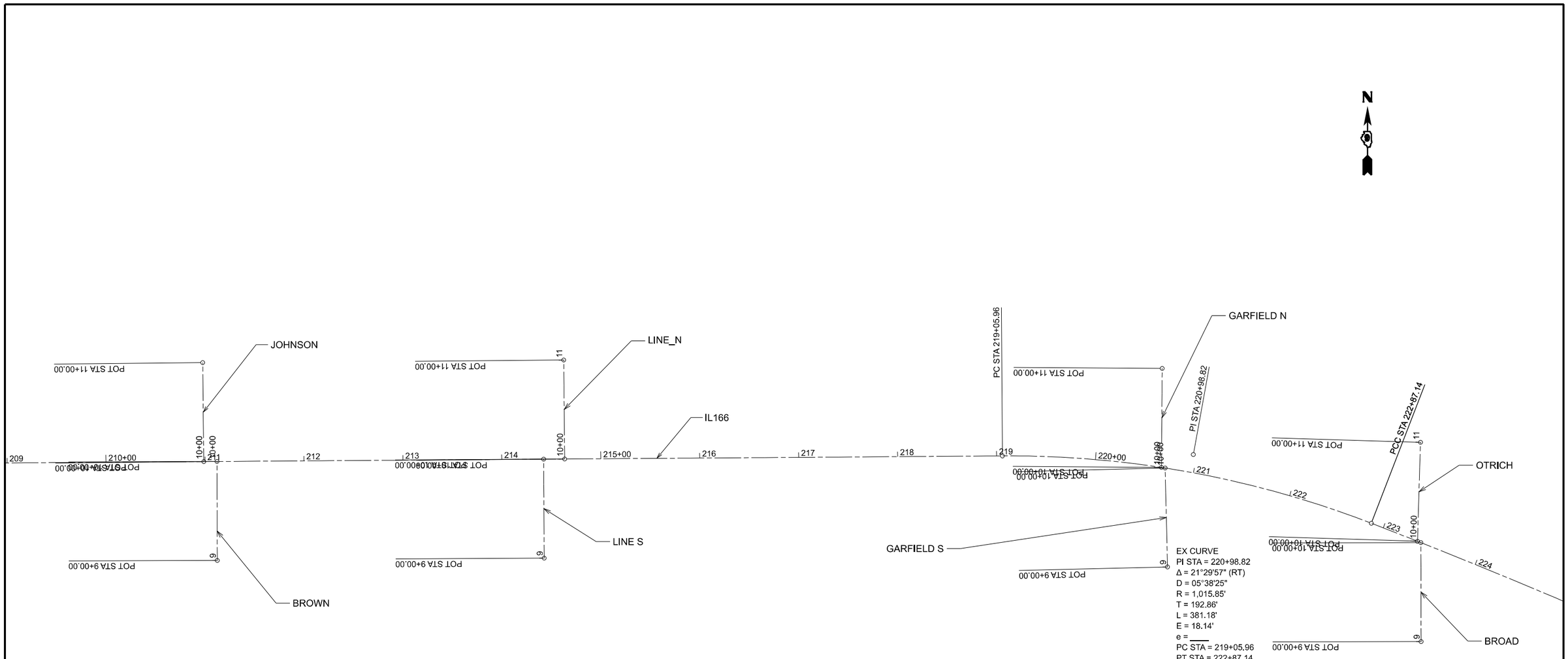

MODEL: GEOPACK [Sheet]
FILE NAME: c:\pw_work\pwidot\white\de\d1066570\D978A74-SHF-GEOPAK.dgn

USER NAME = dylan.white	DESIGNED -	REVISED -	
	DRAWN -	REVISED -	
	CHECKED -	REVISED -	
PLOT DATE = 5/12/2025	DATE -	REVISED -	

STATE OF ILLINOIS
DEPARTMENT OF TRANSPORTATION

GEOPAK IDENTIFICATION

SCALE: | SHEET 1 OF 6 SHEETS | STA. TO STA.

F.A.S RTE.	SECTION	COUNTY	TOTAL SHEETS	SHEET NO.
904	101RS-6	*	40	27
		CONTRACT NO. 78A74		
		ILLINOIS	FED. AID PROJECT	

*JOHNSON/WILLIAMSON

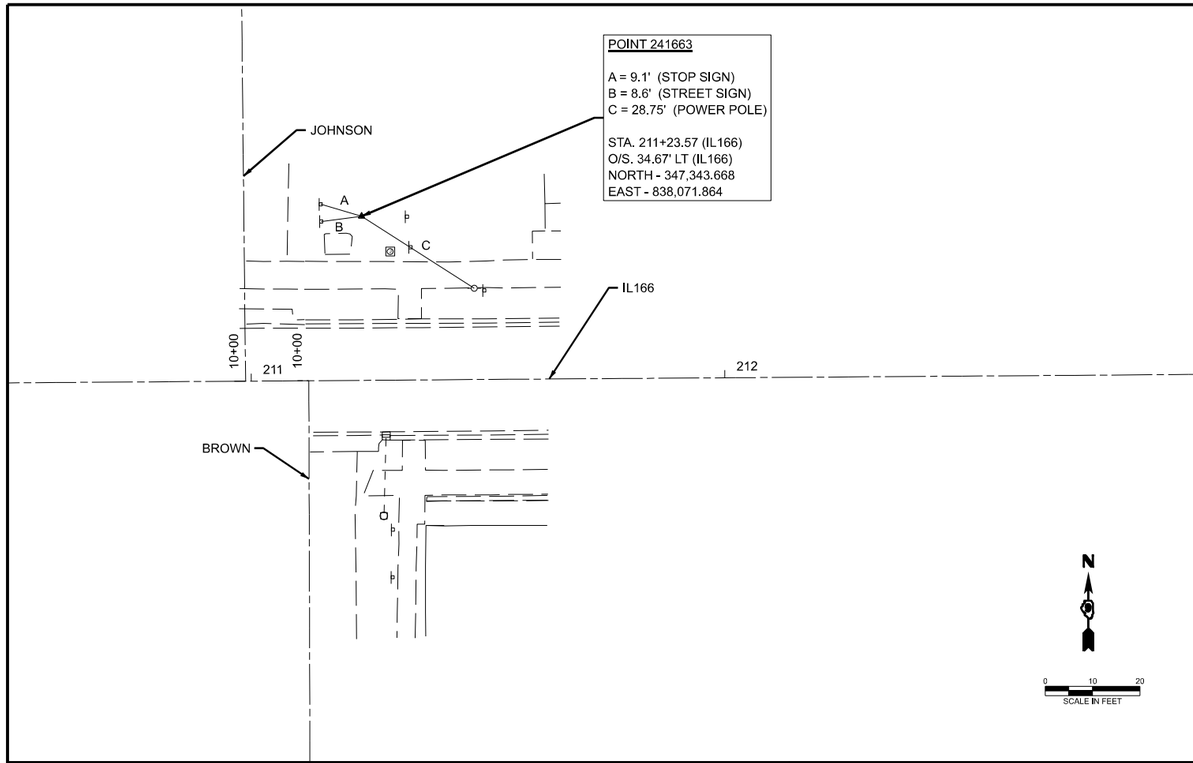

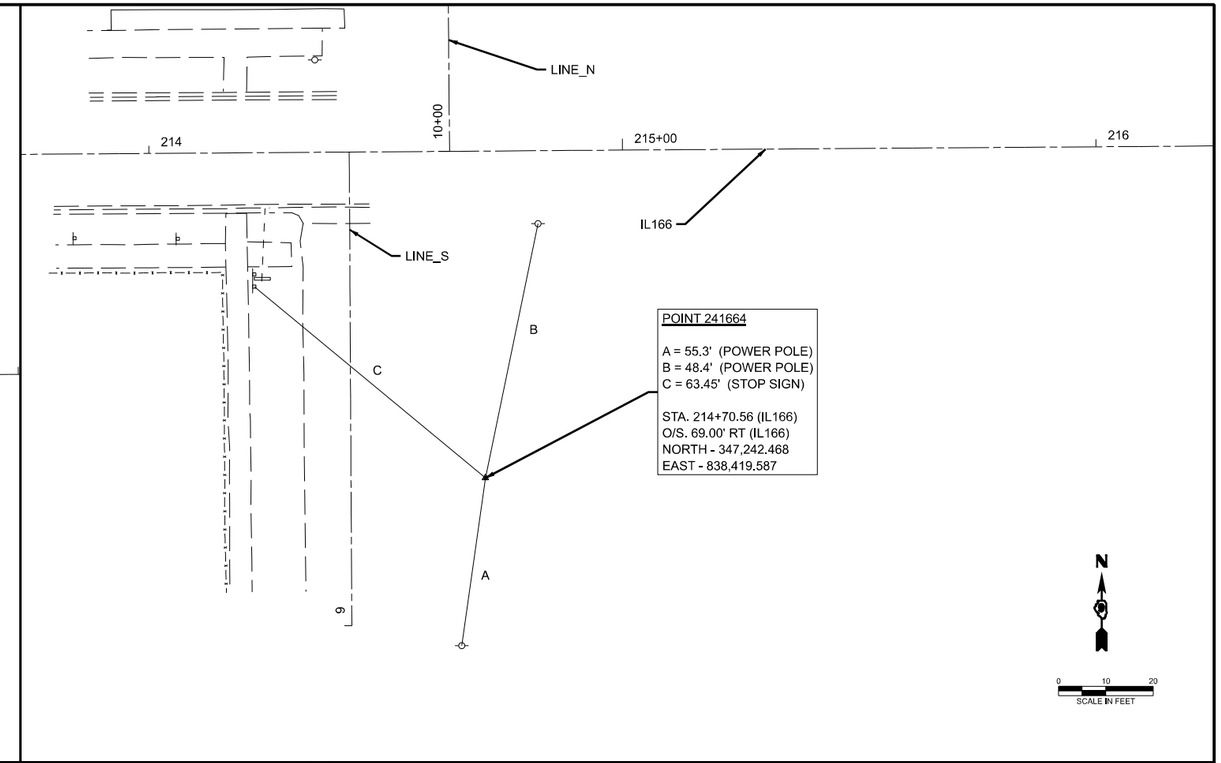

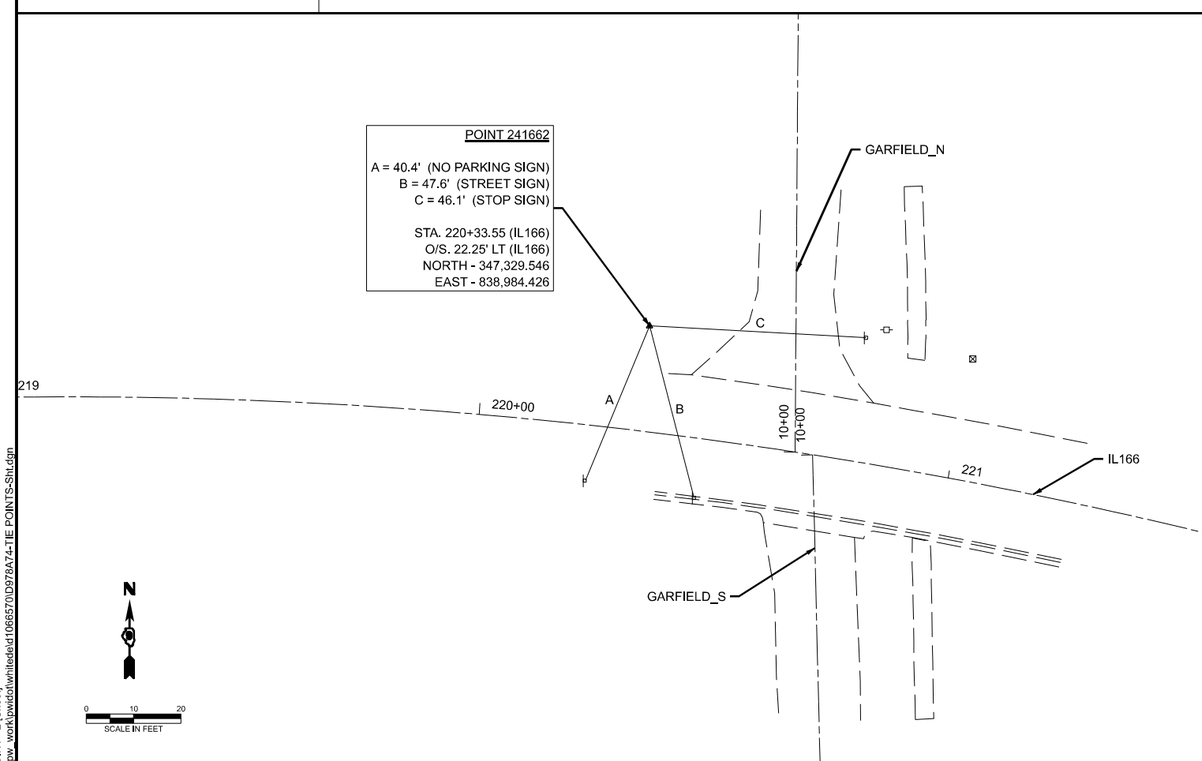

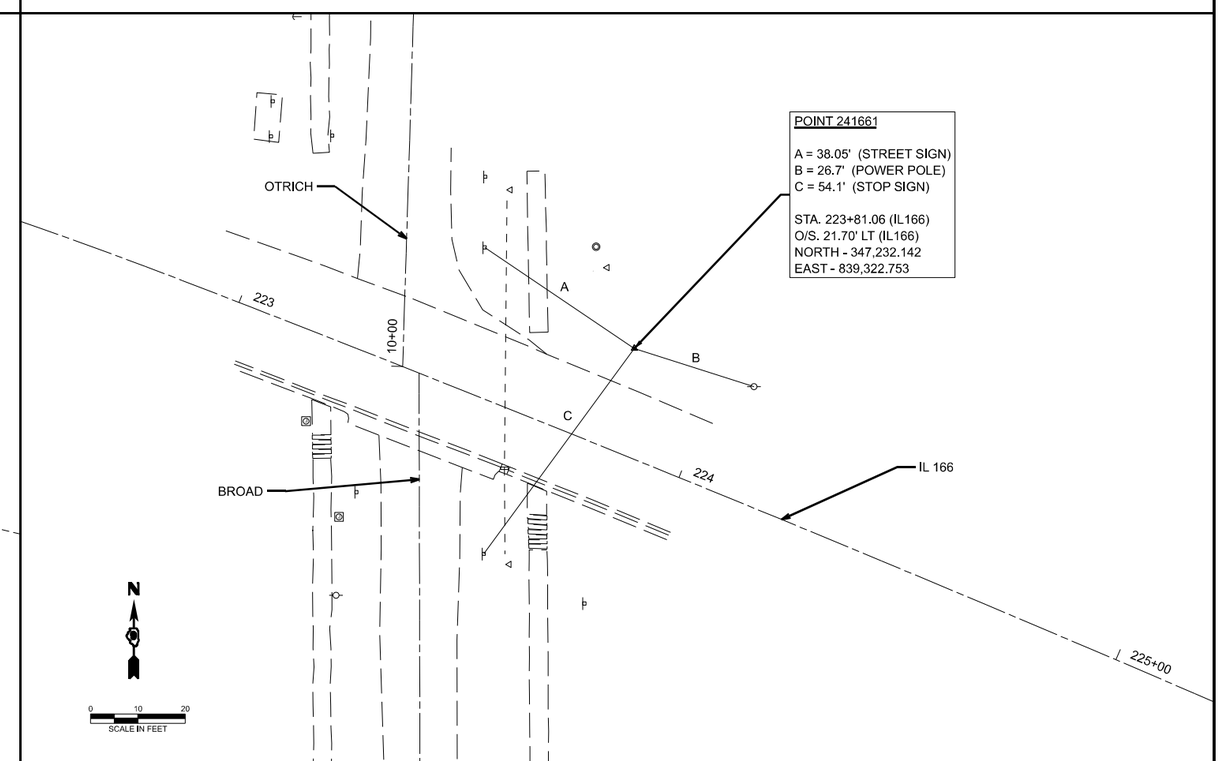

MODEL: TIE POINT - 2 [Sheet]
FILE NAME: c:\pw_work\pwidot\white\d1066570\D978A74-TIE POINTS-Sht.dgn

USER NAME = dylan.white	DESIGNED -	REVISED -	
	DRAWN -	REVISED -	
	CHECKED -	REVISED -	
PLOT DATE = 5/12/2025	DATE -	REVISED -	

STATE OF ILLINOIS
DEPARTMENT OF TRANSPORTATION

TIE POINTS

SCALE: | SHEET 2 OF 6 SHEETS | STA. | TO STA.

F.A.S RTE.	SECTION	COUNTY	TOTAL SHEETS	SHEET NO.
904	101RS-6	*	40	28

CONTRACT NO. 78A74

ILLINOIS | FED. AID PROJECT

*JOHNSON/WILLIAMSON

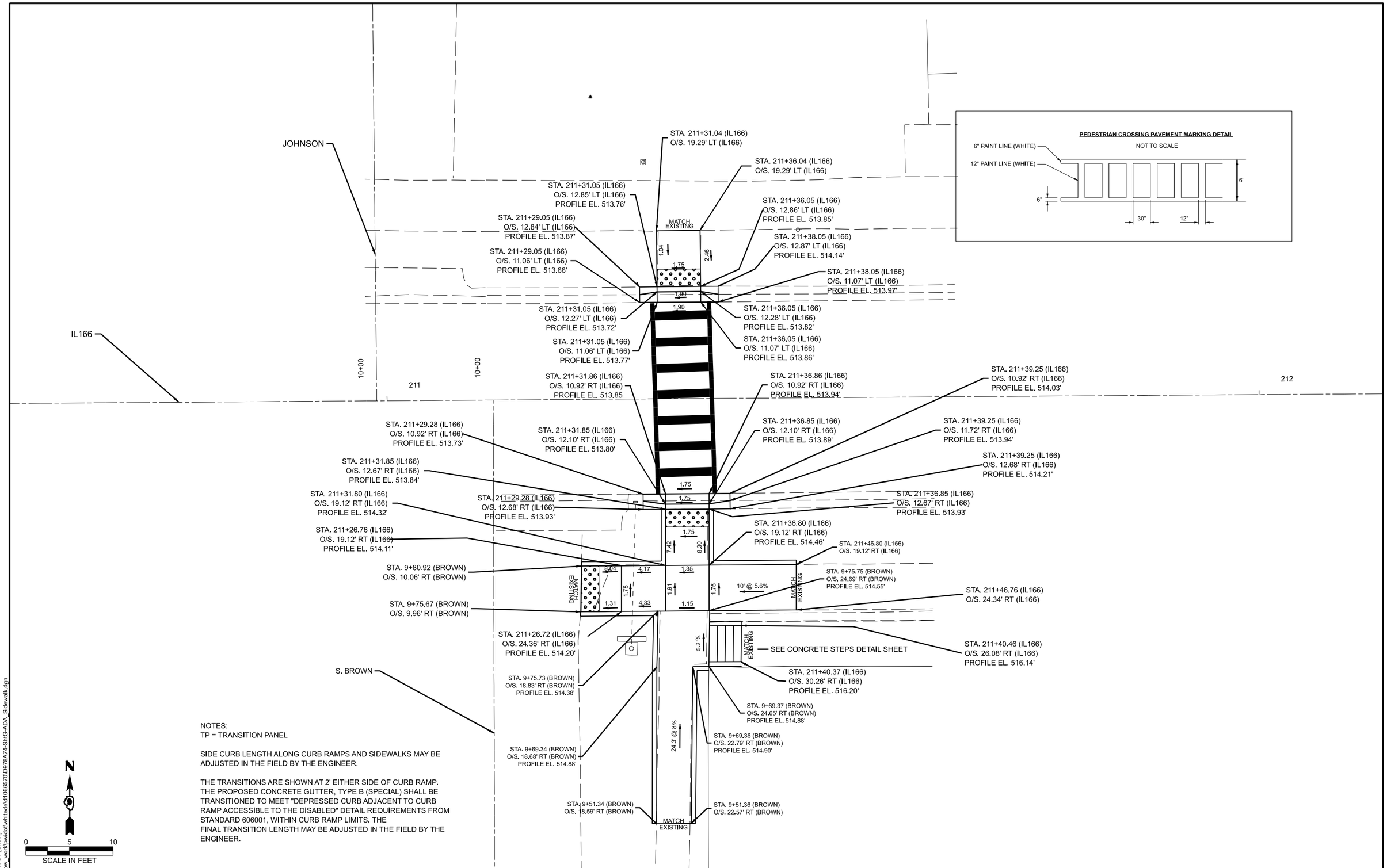

NOTES:
TP = TRANSITION PANEL

SIDE CURB LENGTH ALONG CURB RAMPS AND SIDEWALKS MAY BE ADJUSTED IN THE FIELD BY THE ENGINEER.

THE TRANSITIONS ARE SHOWN AT 2' EITHER SIDE OF CURB RAMP. THE PROPOSED CONCRETE GUTTER, TYPE B (SPECIAL) SHALL BE TRANSITIONED TO MEET "DEPRESSED CURB ADJACENT TO CURB RAMP ACCESSIBLE TO THE DISABLED" DETAIL REQUIREMENTS FROM STANDARD 606001, WITHIN CURB RAMP LIMITS. THE FINAL TRANSITION LENGTH MAY BE ADJUSTED IN THE FIELD BY THE ENGINEER.

0 5 10
SCALE IN FEET

MODEL: BROWN ST [Sheet]
FILE NAME: c:\pw_work\pwidot\whitedel\d1068570\D978A74-Sht0-ADA_Sidewalk.dgn

USER NAME = dylan.white	DESIGNED -	REVISED -	
	DRAWN -	REVISED -	
	CHECKED -	REVISED -	
PLOT DATE = 5/12/2025	DATE -	REVISED -	

STATE OF ILLINOIS
DEPARTMENT OF TRANSPORTATION

S. BROWN ST AND JOHNSON ST ADA RAMPS

SCALE: | SHEET 3 OF 6 SHEETS | STA. | TO STA.

F.A.S RTE.	SECTION	COUNTY	TOTAL SHEETS	SHEET NO.
904	101RS-6	*	40	29

CONTRACT NO. 78A74

ILLINOIS | FED. AID PROJECT

*JOHNSON/WILLIAMSON

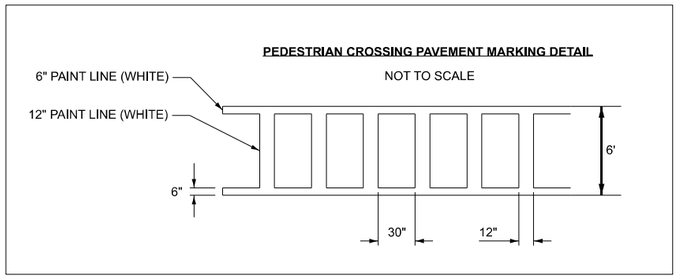

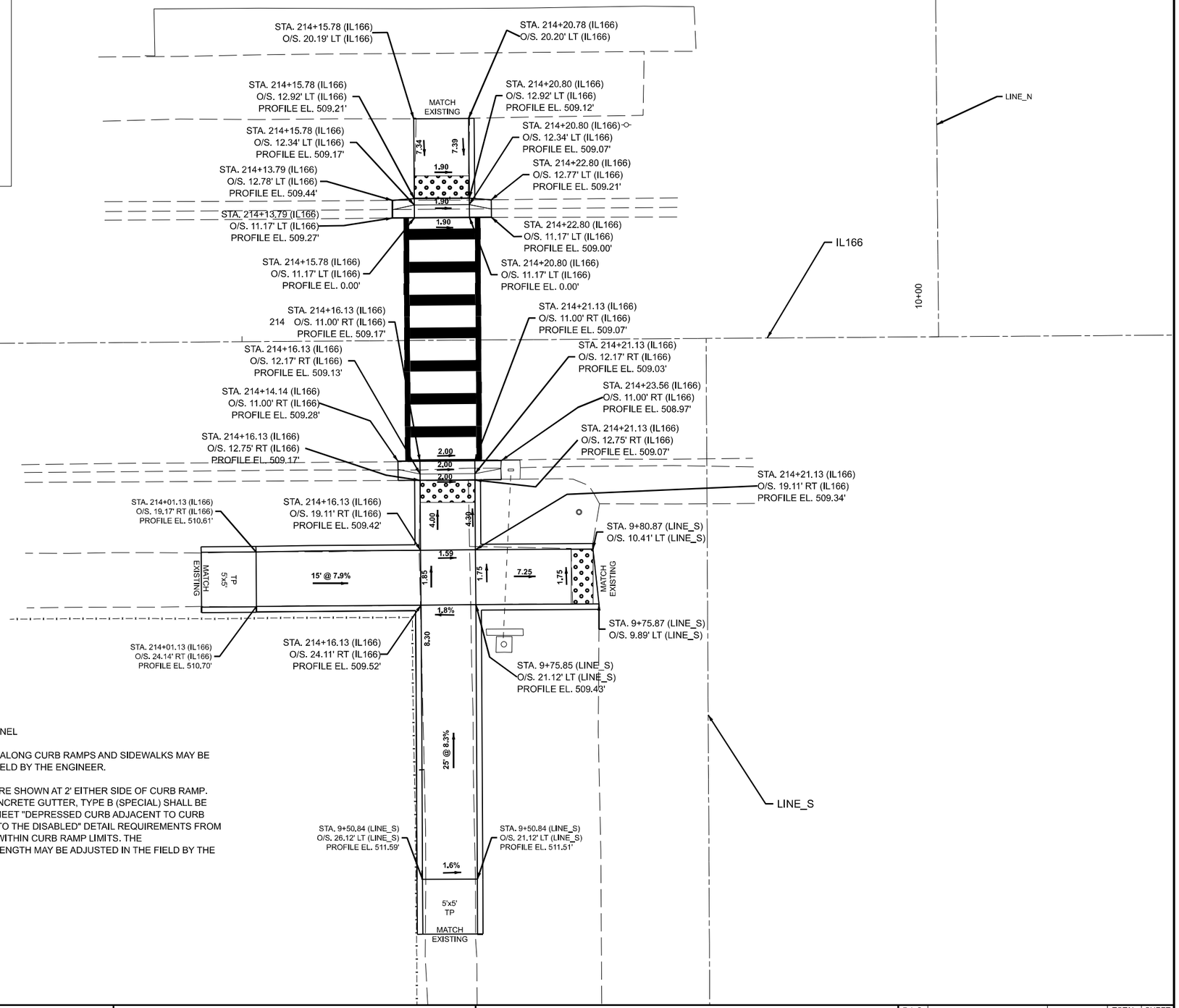

NOTES:
TP = TRANSITION PANEL

SIDE CURB LENGTH ALONG CURB RAMPS AND SIDEWALKS MAY BE ADJUSTED IN THE FIELD BY THE ENGINEER.

THE TRANSITIONS ARE SHOWN AT 2' EITHER SIDE OF CURB RAMP. THE PROPOSED CONCRETE GUTTER, TYPE B (SPECIAL) SHALL BE TRANSITIONED TO MEET "DEPRESSED CURB ADJACENT TO CURB RAMP ACCESSIBLE TO THE DISABLED" DETAIL REQUIREMENTS FROM STANDARD 606001, WITHIN CURB RAMP LIMITS. THE FINAL TRANSITION LENGTH MAY BE ADJUSTED IN THE FIELD BY THE ENGINEER.

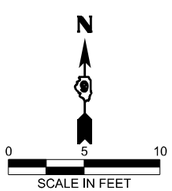

MODEL: LINE ST-2 [Sheet]
FILE NAME: c:\pw_work\pwidot\whitedel\d1066570\D978A74-Sht-ADA_Sidewalk.dgn

USER NAME = dylan.white	DESIGNED -	REVISED -	
	DRAWN -	REVISED -	
	CHECKED -	REVISED -	
PLOT DATE = 5/12/2025	DATE -	REVISED -	

STATE OF ILLINOIS
DEPARTMENT OF TRANSPORTATION

S. LINE ST AND N. LINE ST ADA RAMPS

SCALE: | SHEET 4 OF 6 SHEETS | STA. TO STA.

F.A.S RTE.	SECTION	COUNTY	TOTAL SHEETS	SHEET NO.
904	101RS-6	*	40	30

CONTRACT NO. 78A74

ILLINOIS | FED. AID PROJECT

*JOHNSON/WILLIAMSON

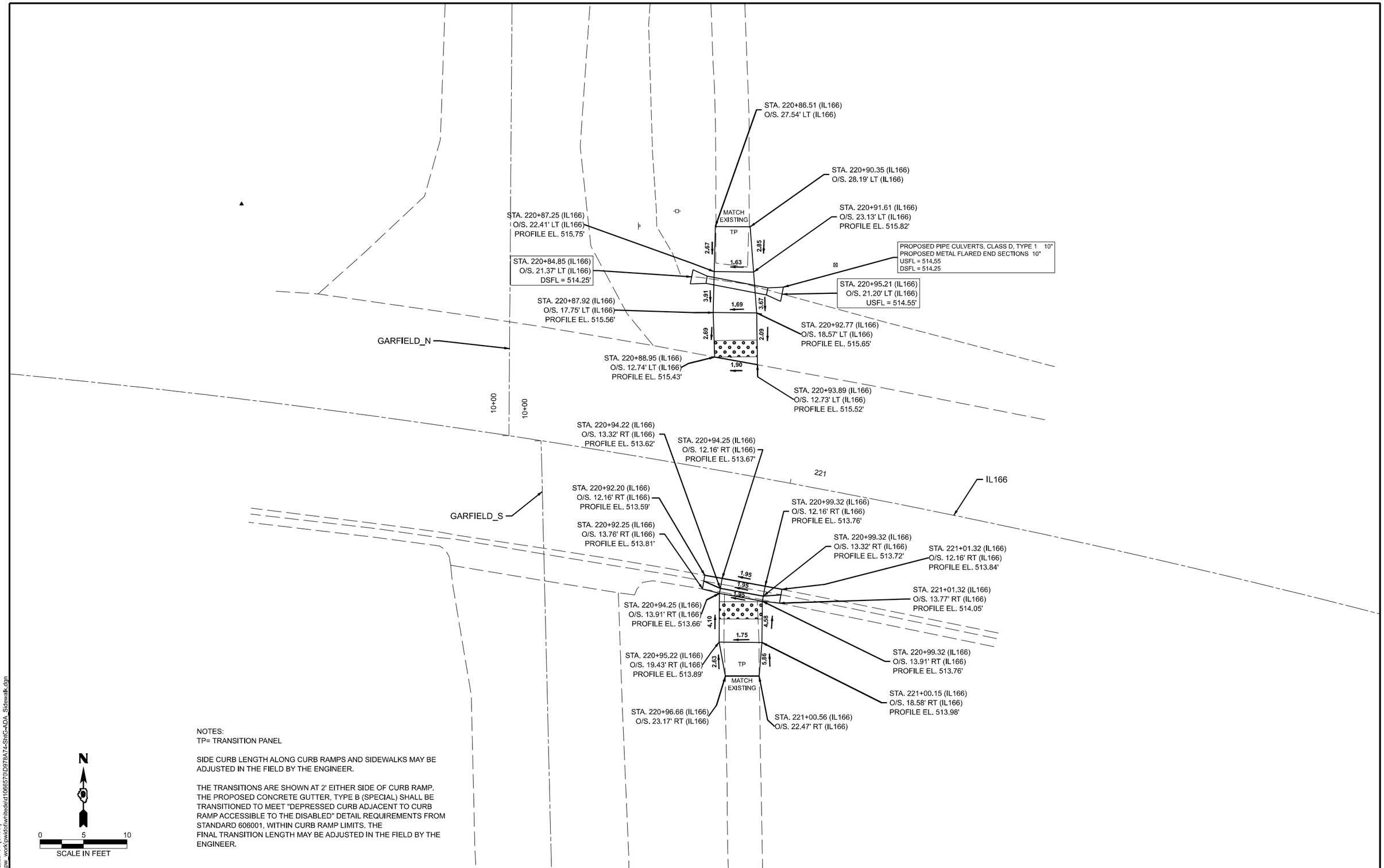

NOTES:
TP= TRANSITION PANEL

SIDE CURB LENGTH ALONG CURB RAMPS AND SIDEWALKS MAY BE ADJUSTED IN THE FIELD BY THE ENGINEER.

THE TRANSITIONS ARE SHOWN AT 2' EITHER SIDE OF CURB RAMP. THE PROPOSED CONCRETE GUTTER, TYPE B (SPECIAL) SHALL BE TRANSITIONED TO MEET "DEPRESSED CURB ADJACENT TO CURB RAMP ACCESSIBLE TO THE DISABLED" DETAIL REQUIREMENTS FROM STANDARD 606001, WITHIN CURB RAMP LIMITS. THE FINAL TRANSITION LENGTH MAY BE ADJUSTED IN THE FIELD BY THE ENGINEER.

MODEL: GARFIELD ST [Sheet]
FILE NAME: c:\pw_work\pwidot\whitedel\d1066570\D978A74-SHG-ADA_Sidewalk.dgn

USER NAME = dylan.white	DESIGNED -	REVISED -	
	DRAWN -	REVISED -	
	CHECKED -	REVISED -	
PLOT DATE = 5/12/2025	DATE -	REVISED -	

STATE OF ILLINOIS
DEPARTMENT OF TRANSPORTATION

N. GARFIELD ST AND S. GARFIELD ST ADA RAMPS

SCALE: | SHEET 5 OF 6 SHEETS | STA. TO STA.

F.A.S RTE.	SECTION	COUNTY	TOTAL SHEETS	SHEET NO.
904	101RS-6	*	40	31

CONTRACT NO. 78A74

ILLINOIS | FED. AID PROJECT

*JOHNSON/WILLIAMSON

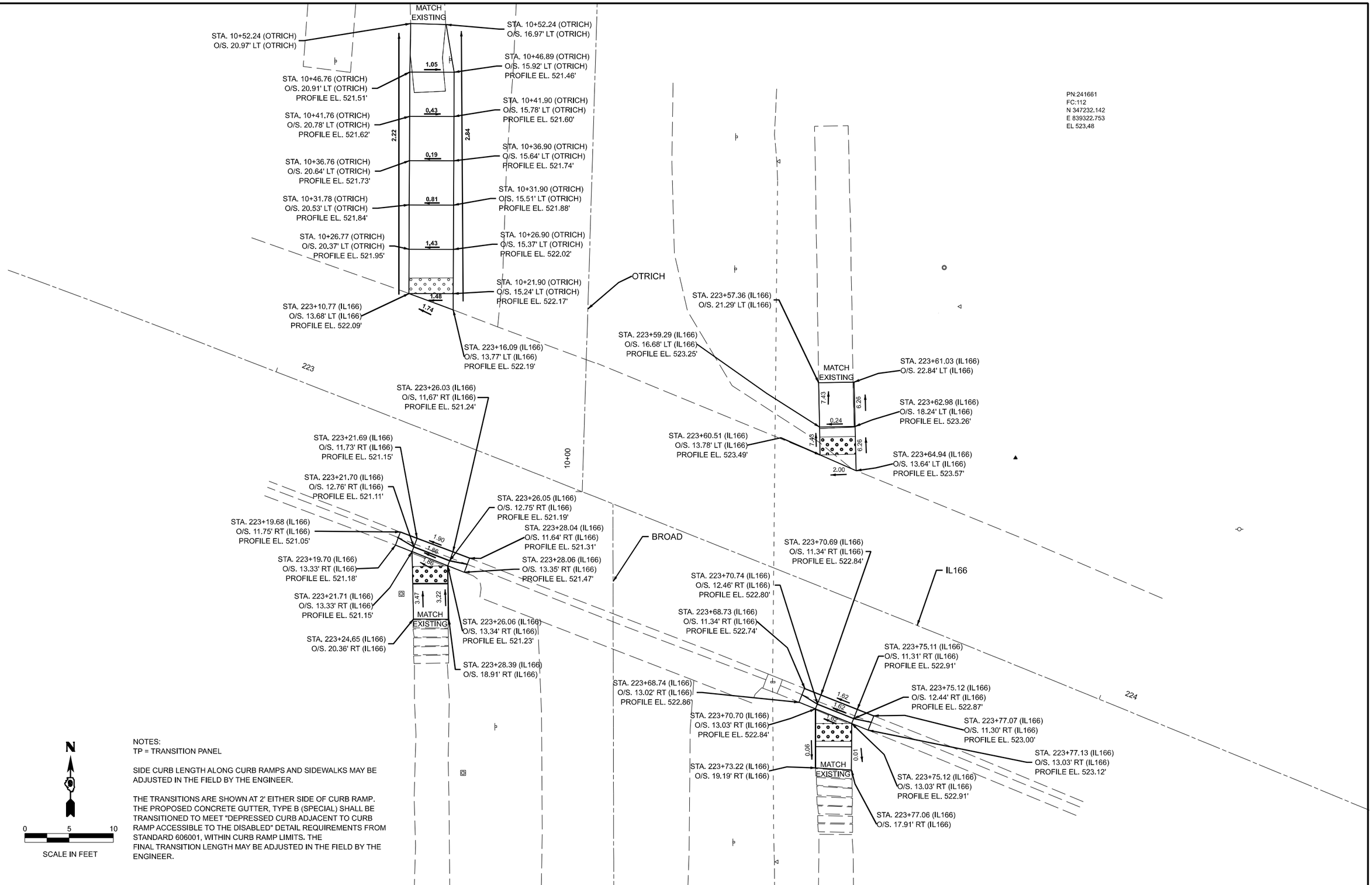

PN:241661
FC:112
N 347232.142
E 839322.753
EL 523.48

NOTES:
TP = TRANSITION PANEL

SIDE CURB LENGTH ALONG CURB RAMPS AND SIDEWALKS MAY BE ADJUSTED IN THE FIELD BY THE ENGINEER.

THE TRANSITIONS ARE SHOWN AT 2' EITHER SIDE OF CURB RAMP. THE PROPOSED CONCRETE GUTTER, TYPE B (SPECIAL) SHALL BE TRANSITIONED TO MEET "DEPRESSED CURB ADJACENT TO CURB RAMP ACCESSIBLE TO THE DISABLED" DETAIL REQUIREMENTS FROM STANDARD 606001, WITHIN CURB RAMP LIMITS. THE FINAL TRANSITION LENGTH MAY BE ADJUSTED IN THE FIELD BY THE ENGINEER.

MODEL: BROAD ST [Sheet]
FILE NAME: c:\pw_work\pwidot\whitedel\d1066570\D978A74-StHG-ADA_Sidewalk.dgn

USER NAME = dylan.white	DESIGNED -	REVISED -	
	DRAWN -	REVISED -	
	CHECKED -	REVISED -	
PLOT DATE = 5/12/2025	DATE -	REVISED -	

STATE OF ILLINOIS
DEPARTMENT OF TRANSPORTATION

S. BROAD ST AND OTRICH ST ADA RAMPS

SCALE: | SHEET 6 OF 6 SHEETS | STA. | TO STA.

F.A.S RTE.	SECTION	COUNTY	TOTAL SHEETS	SHEET NO.
904	101RS-6	*	40	32

CONTRACT NO. 78A74

ILLINOIS | FED. AID PROJECT

*JOHNSON/WILLIAMSON

TRANSITION DETAIL FROM EX HMA TO 2 1/4" OVERLAY

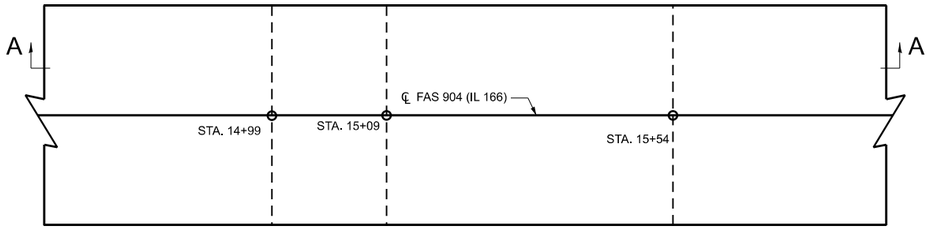

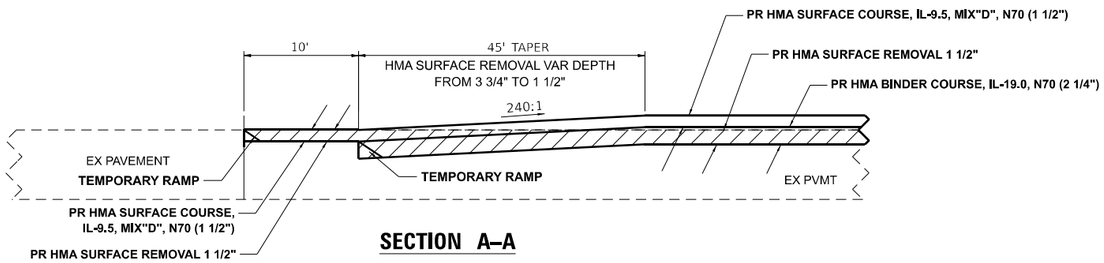

SECTION A–A

TRANSITION DETAIL FROM 1 1/4" OVERLAY TO INLAY

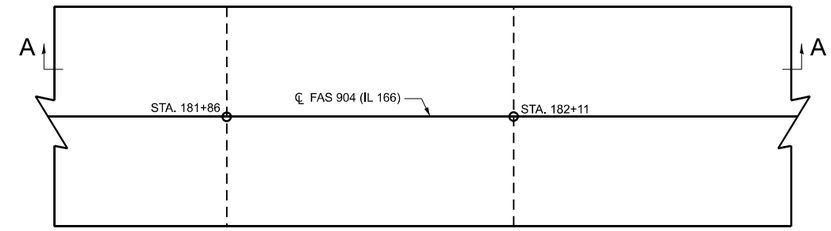

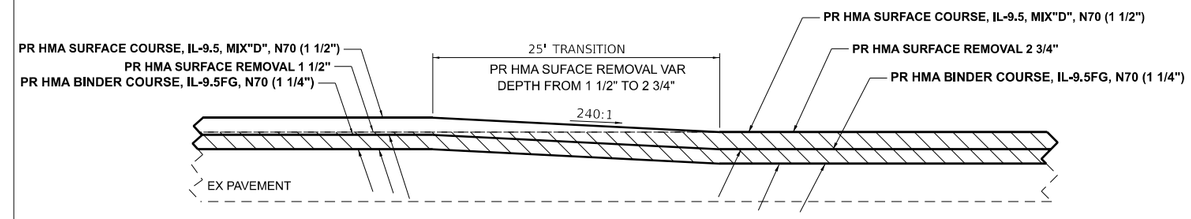

SECTION A–A

TRANSITION DETAIL FROM INLAY TO 1 1/4" OVERLAY

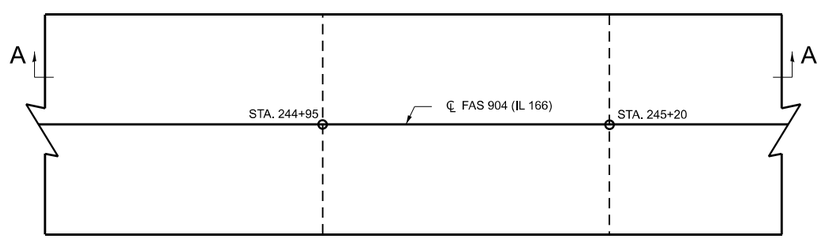

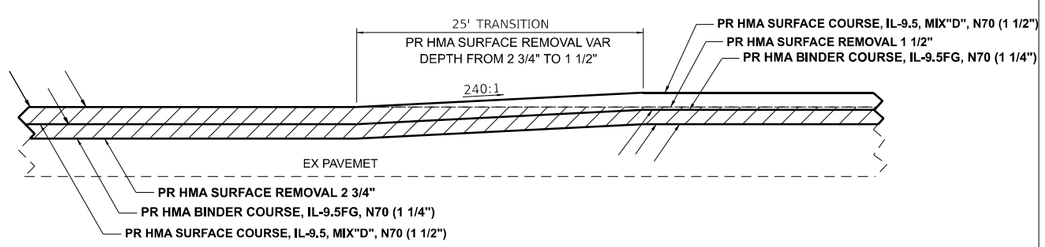

SECTION A–A

TRANSITION DETAIL FROM 1 1/4" OVERLAY TO INLAY

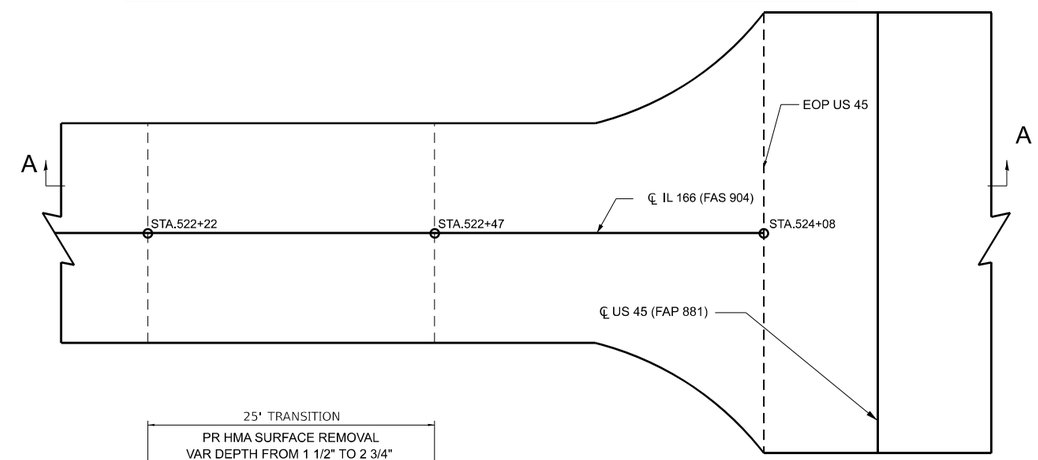

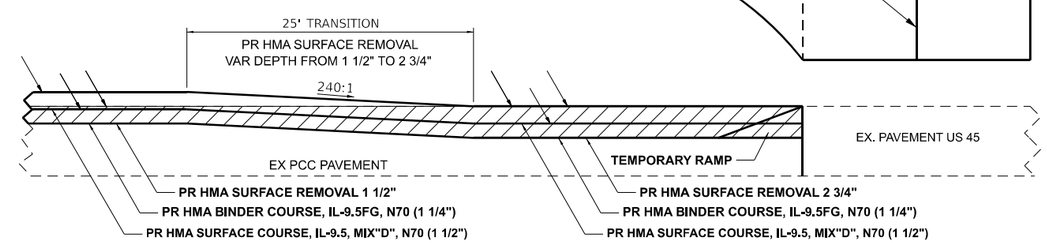

SECTION A–A

MODEL: TRAINSITION DETAIL-1 [Sheet]
FILE NAME: c:\pw_work\pwidot\whitedd\d1065570\D978A74-SHS-DistrictStds.dgn

USER NAME = dylan.white	DESIGNED -	REVISED -	STATE OF ILLINOIS DEPARTMENT OF TRANSPORTATION
	DRAWN -	REVISED -	
	CHECKED -	REVISED -	
PLOT DATE = 5/12/2025	DATE -	REVISED -	

TRANSITION DETAILS

SCALE: SHEET 1 OF 8 SHEETS STA. TO STA.

F.A.S RTE.	SECTION	COUNTY	TOTAL SHEETS	SHEET NO.
904	101RS-6	*	40	33
		CONTRACT NO. 78A74		
		ILLINOIS FED. AID PROJECT		

*JOHNSON/WILLIAMSON

STRUCTURE TRANSITION
SN 100-7057
SN 100-7054

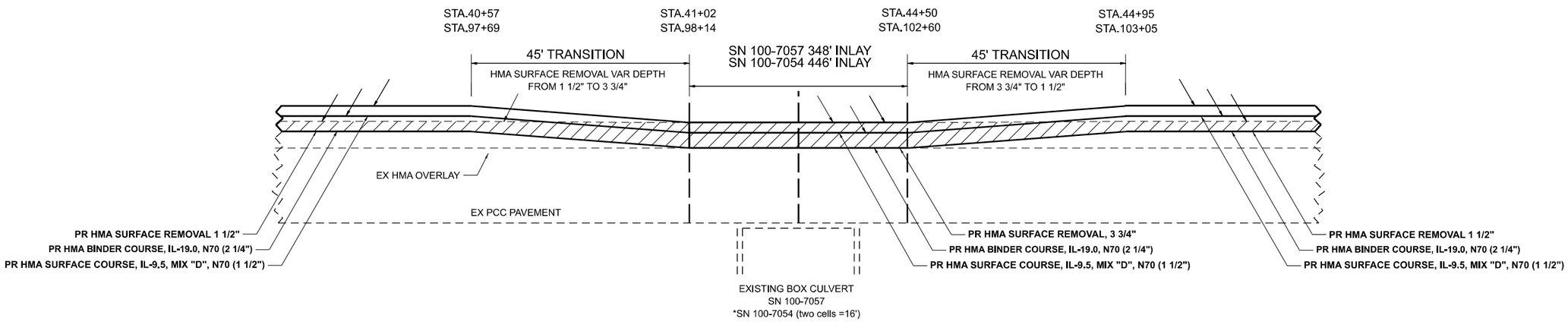

STRUCTURE TRANSITION
SN 100–7052

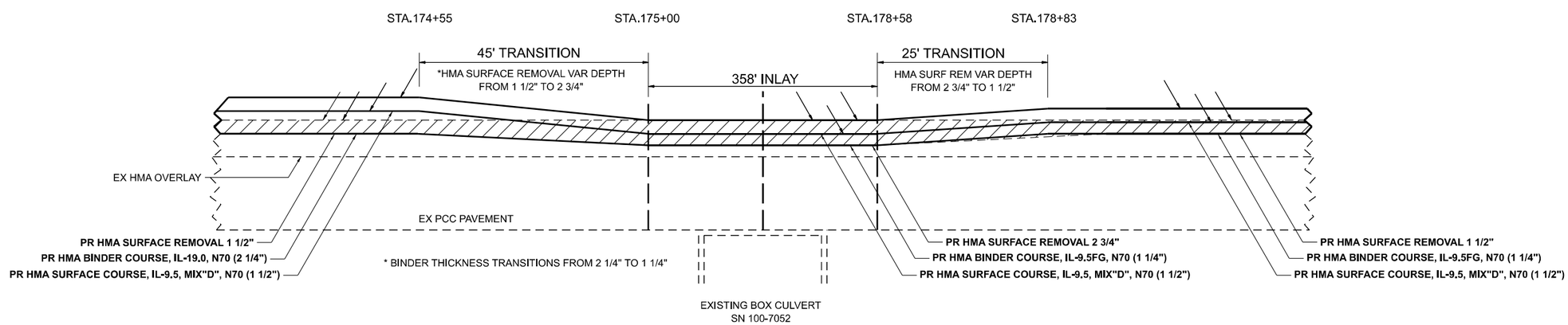

MODEL: TRAINSITION DETAIL-2 [Sheet]
FILE NAME: c:\pw_work\pwidot\white\d1066570\D978A74-SHS-DistrictStds.dgn

USER NAME = dylan.white	DESIGNED -	REVISED -	STATE OF ILLINOIS DEPARTMENT OF TRANSPORTATION	TRANSITION DETAILS SN 100-7057, SN 100-7054, SN 100-7052	F.A.S RTE.	SECTION	COUNTY	TOTAL SHEETS / SHEET NO.
	DRAWN -	REVISED -			904	101RS-6	*	40 / 34
	CHECKED -	REVISED -					CONTRACT NO. 78A74	
PLOT DATE = 5/12/2025	DATE -	REVISED -		SCALE: SHEET 2 OF 8 SHEETS STA. TO STA.		ILLINOIS	FED. AID PROJECT	

*JOHNSON/WILLIAMSON

STRUCTURE TRANSITION

SN 100–0031

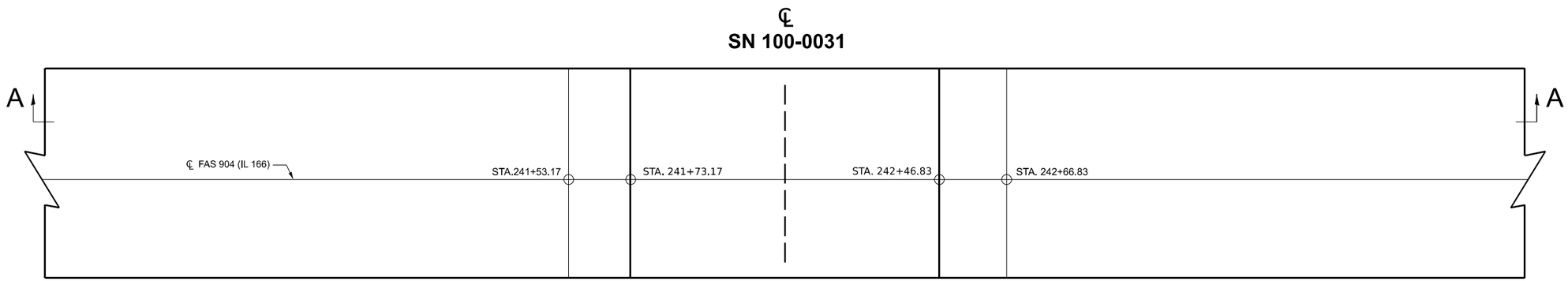

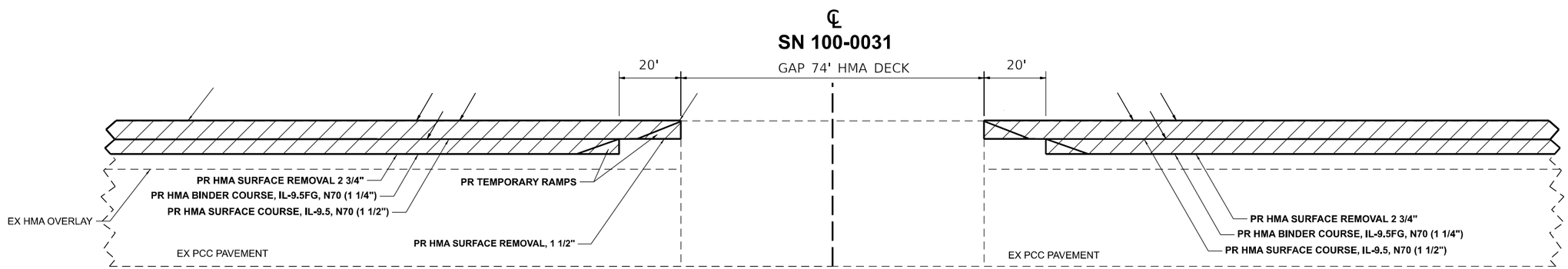

SECTION A–A

MODEL: TRAINSITION DETAIL-3 [Sheet]
FILE NAME: c:\pw_work\pwidot\whitedad1066570\D978A74-SHS-DistrictStds.dgn

USER NAME = dylan.white	DESIGNED -	REVISED -	
	DRAWN -	REVISED -	
	CHECKED -	REVISED -	
PLOT DATE = 5/12/2025	DATE -	REVISED -	

STATE OF ILLINOIS
DEPARTMENT OF TRANSPORTATION

TRANSITION DETAIL
SN 100-0031

SCALE: | SHEET 3 OF 8 SHEETS | STA. | TO STA.

F.A.S RTE.	SECTION	COUNTY	TOTAL SHEETS	SHEET NO.
904	101RS-6	*	40	35

CONTRACT NO. 78A74

ILLINOIS | FED. AID PROJECT

*JOHNSON/WILLIAMSON

STRUCTURE TRANSITION

SN 100–7050 & SN 100–7049

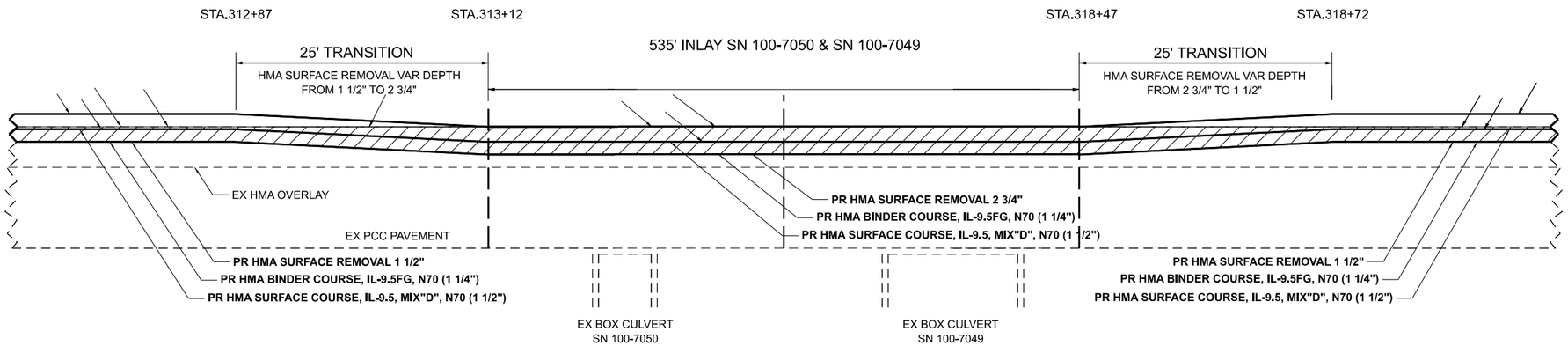

STRUCTURE TRANSITION

SN 100–7048

SN 044–7030

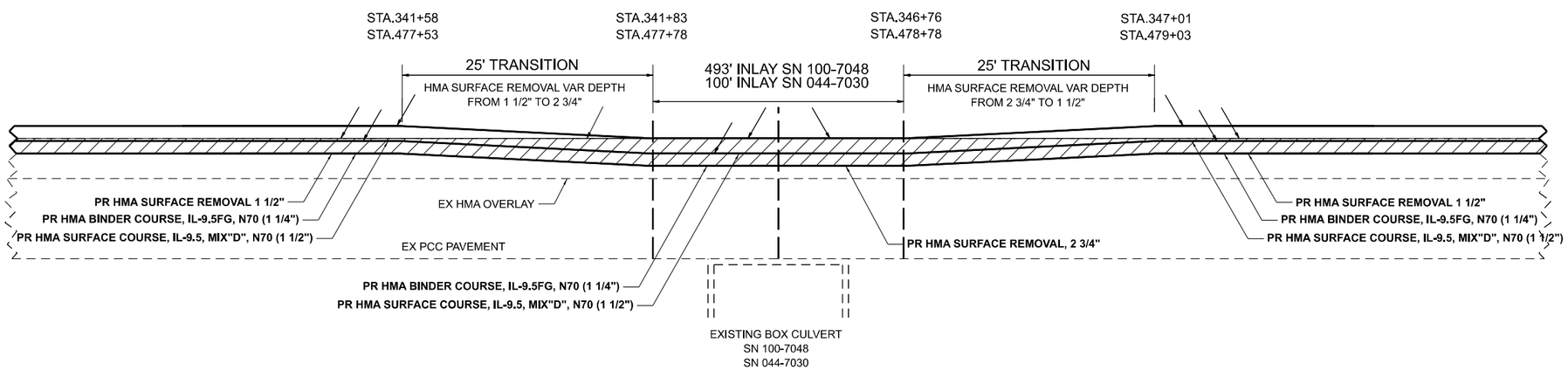

MODEL: TRAINSITION DETAIL-4 {Sheet}
FILE NAME: c:\pw_work\pwidot\white\d1066570\D978A74-SHS-DistrictStds.dgn

USER NAME = dylan.white	DESIGNED -	REVISED -	
	DRAWN -	REVISED -	
	CHECKED -	REVISED -	
PLOT DATE = 5/12/2025	DATE -	REVISED -	

STATE OF ILLINOIS
DEPARTMENT OF TRANSPORTATION

TRANSITION DETAILS
SN 100-7050, SN 100-7049, SN 100-7048, SN 044-7030

SCALE: | SHEET 4 OF 8 SHEETS | STA. | TO STA.

F.A.S RTE.	SECTION	COUNTY	TOTAL SHEETS	SHEET NO.
904	101RS-6	*	40	36
		CONTRACT NO. 78A74		
		ILLINOIS	FED. AID PROJECT	

*JOHNSON/WILLIAMSON

AGGREGATE ENTRANCE 1 1/4" OVERLAY

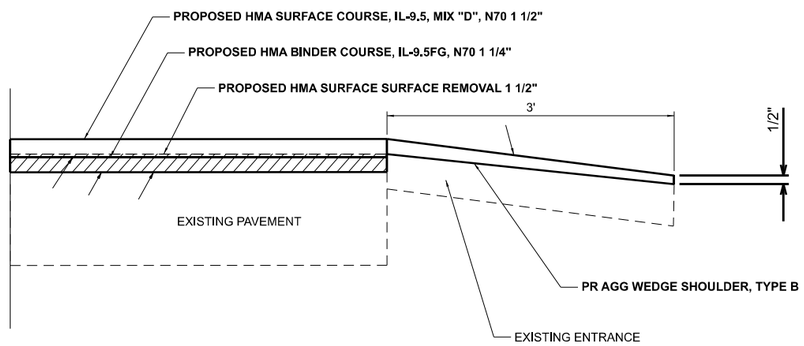

HMA OR PCC ENTRANCE 1 1/4" OVERLAY

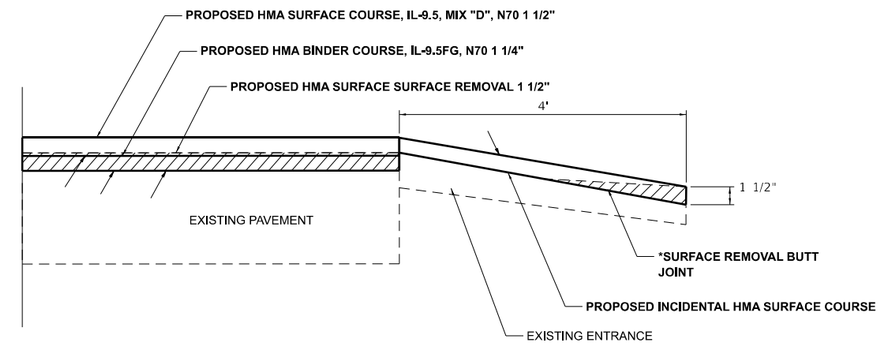

HMA, PCC, OR OIL AND CHIP SIDEROADS WITH BUTT JOINT 1 1/4"OVERLAY

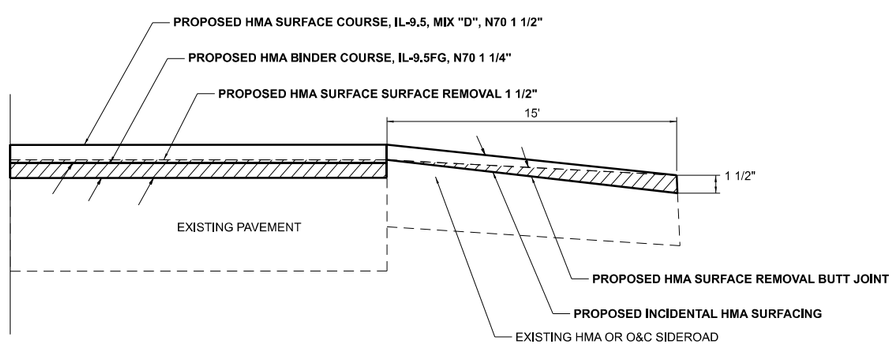

AGGREGATE SIDEROADS 1 1/4" OVERLAY

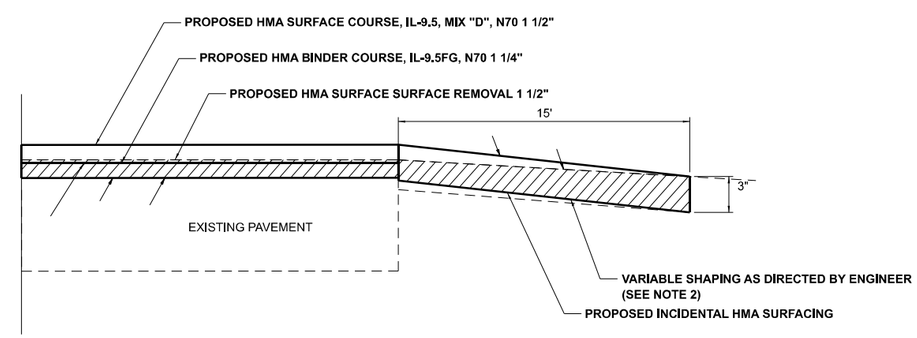

1. IF THE EXISTING SUBASE IS INADEQUATE, AS DETERMINED BY THE ENGINEER, THE SIDE ROADS SHALL BE CORED OUT AND AGGREGATE SUBBASE, TYPE B SHALL BE PLACED FOR BASE. THE COST OF CORING OUT THE SIDEROAD AND ANY AGGREGATE BASE COURSE SHALL BE PAID FOR AS SPECIFIED IN ART. 109.04 OF THE STANDARD SPECIFICATIONS FOR ROAD AND BRIDGE CONSTRUCTION. IF EXISTING SUBBASE IS DETERMINED TO BE ADEQUATE, THE PREPARTION OF THE BASE SHALL BE CONSTRUCTED ACCORDING TO ARTICLE 406.09.
2. VARIABLE SHAPING IS INCLUDED IN THE COST OF INCIDENTAL HOT-MIX ASPHALT SURFACING.
3. *SURFACE REMOVAL BUTT JOINT ON ENTRANCES IS INCLUDED IN THE COST OF INCIDENTAL HOT-MIX ASPHALT SURFACING.

AGGREGATE ENTRANCE 2 1/4" OVERLAY

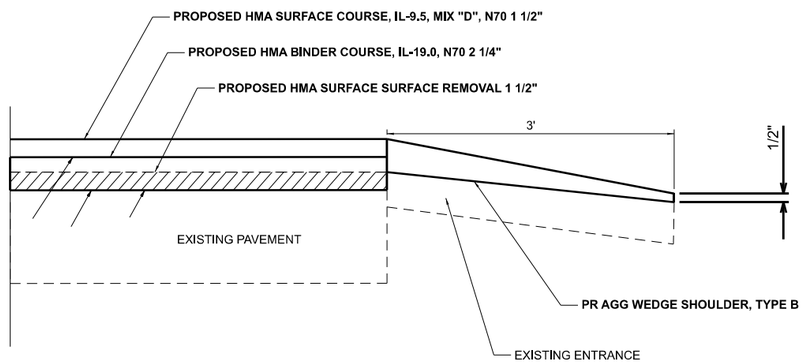

TEMPORARY RAMP AT SIDEROADS

(NOT TO SCALE)

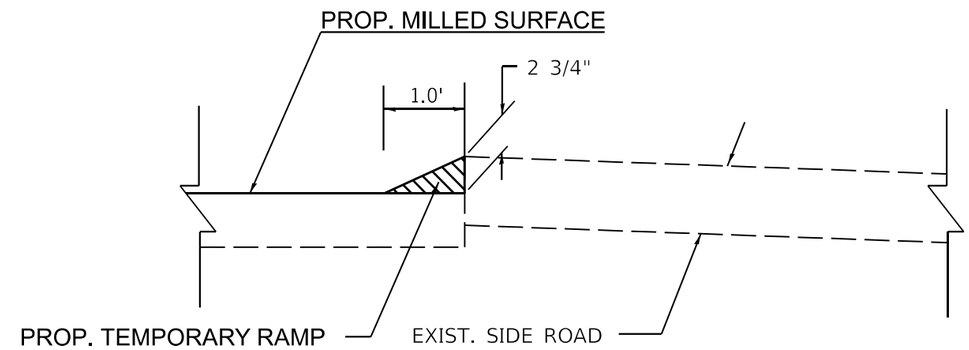

HMA, PCC OR OIL & CHIP SIDEROADS WITH BUTT JOINT 2 1/4" OVERLAY

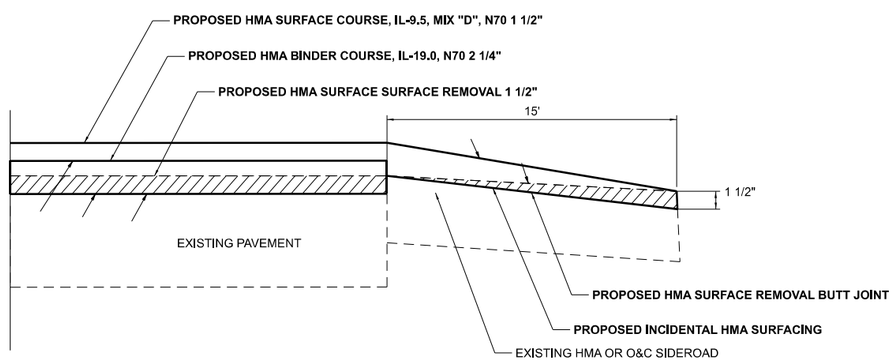

HMA OR PCC ENTRANCE 2 1/4" OVERLAY

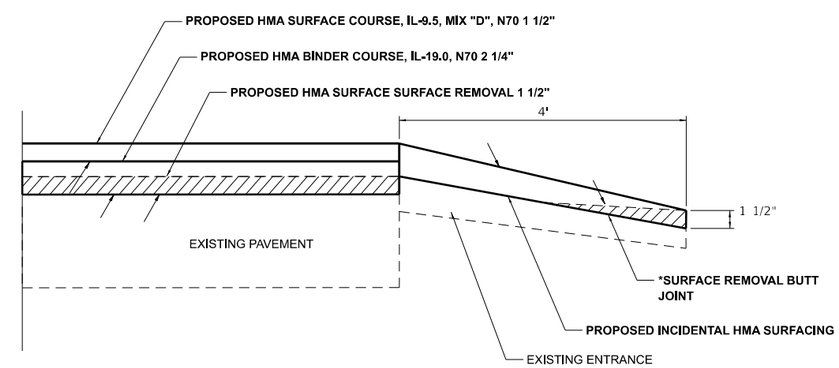

1. IF THE EXISTING SUBASE IS INADEQUATE, AS DETERMINED BY THE ENGINEER, THE SIDE ROADS SHALL BE CORED OUT AND AGGREGATE SUBBASE, TYPE B SHALL BE PLACED FOR BASE. THE COST OF CORING OUT THE SIDEROAD AND ANY AGGREGATE BASE COURSE SHALL BE PAID FOR AS SPECIFIED IN ART. 109.04 OF THE STANDARD SPECIFICATIONS FOR ROAD AND BRIDGE CONSTRUCTION. IF EXISTING SUBBASE IS DETERMINED TO BE ADEQUATE, THE PREPARTION OF THE BASE SHALL BE CONSTRUCTED ACCORDING TO ARTICLE 406.09.
2. VARIABLE SHAPING IS INCLUDED IN THE COST OF INCIDENTAL HOT-MIX ASPHALT SURFACING.
3. *SURFACE REMOVAL BUTT JOINT ON ENTRANCES IS INCLUDED IN THE COST OF INCIDENTAL HOT-MIX ASPHALT SURFACING.

MODEL: DESIGN OVERLAY ENTRANCE DETAIL-6 [Sheet]
FILE NAME: c:\pw_work\pwidot\white\ed\d1065570\D978A74-Sht5-DistrictStds.dgn

USER NAME = dylan.white	DESIGNED -	REVISED -	STATE OF ILLINOIS DEPARTMENT OF TRANSPORTATION
	DRAWN -	REVISED -	
	CHECKED -	REVISED -	
PLOT DATE = 5/12/2025	DATE -	REVISED -	

DESIGN OVERLAY
SIDEROAD, ENTRANCE AND TEMPORARY RAMP DETAILS

SCALE: | SHEET 6 OF 8 SHEETS | STA. | TO STA.

F.A.S RTE.	SECTION	COUNTY	TOTAL SHEETS	SHEET NO.
904	101RS-6	*	40	38
		CONTRACT NO. 78A74		
		ILLINOIS	FED. AID PROJECT	

*JOHNSON/WILLIAMSON

ENTRANCE AT STA 522+95

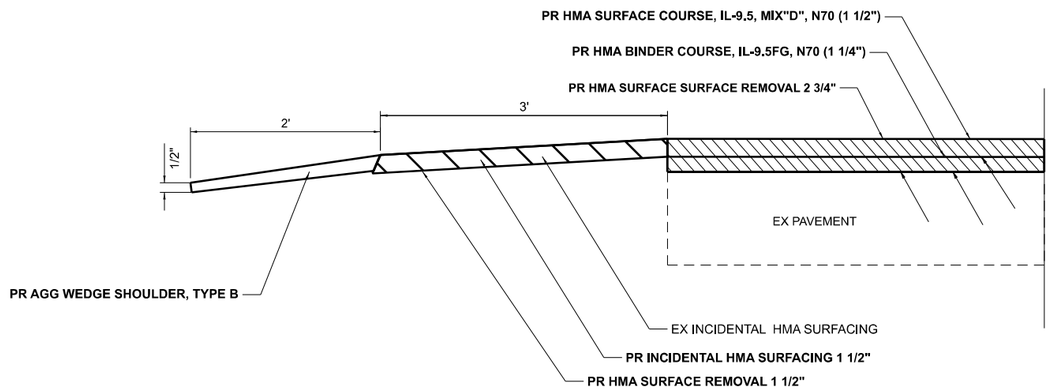

PCC STEPS & PIPE HANDRAIL DETAIL
(BROWN ST. - SE CORNER)

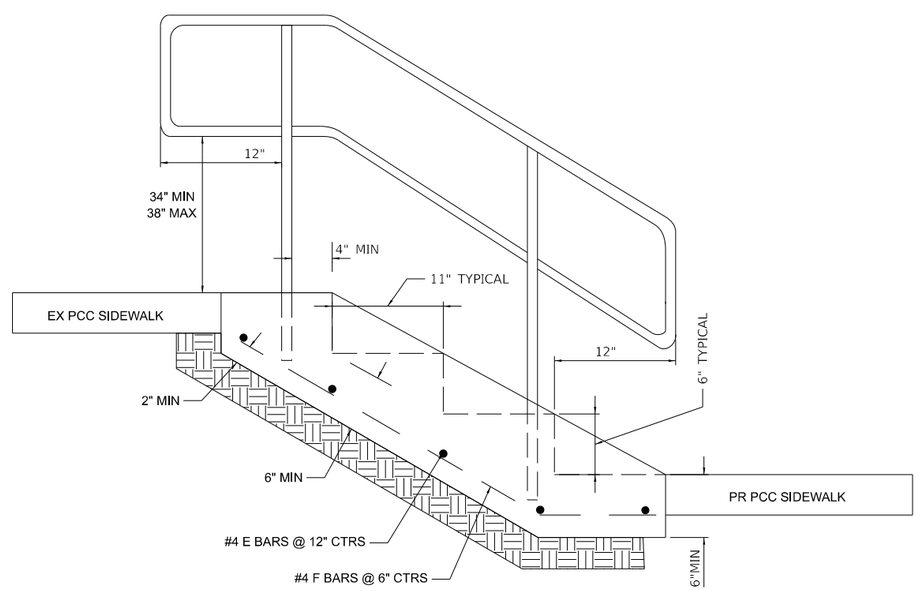

REINFORCEMENT FOR CONCRETE STEPS				
BAR	SIZE	SHAPE	LENGTH	NUMBER
BAR "E"	4	———	4' - 10"	5
BAR "F"	4	⌞	4' - 0"	10
TOTAL				15

MODEL: CONCRETE STEPS AND INCIDENTAL ENTRANCE DETAIL-7 [Sheet]
FILE NAME: c:\pw_work\pwidot\white\d1086570\D978A74-SHS-DistrictStds.dgn

USER NAME = dylan.white	DESIGNED -	REVISED -	STATE OF ILLINOIS DEPARTMENT OF TRANSPORTATION
	DRAWN -	REVISED -	
	CHECKED -	REVISED -	
PLOT DATE = 5/12/2025	DATE -	REVISED -	

CONCRETE STEPS, INCIDENTAL ENTRANCE DETAILS

SCALE: | SHEET 7 OF 8 SHEETS | STA. | TO STA.

F.A.S RTE.	SECTION	COUNTY	TOTAL SHEETS	SHEET NO.
904	101RS-6	*	40	39
		CONTRACT NO. 78A74		
		ILLINOIS FED. AID PROJECT		

*JOHNSON/WILLIAMSON

UNEVEN LANES SIGN

W8–11 (48" X 48")

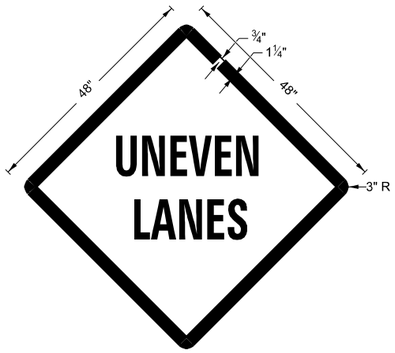

COLORS:

LEGEND AND BORDER - BLACK NON-REFLECTORIZED
BACKGROUND - ORANGE REFLECTORIZED

NOTE: PRIOR TO ALLOWING TRAFFIC ON ANY PORTION OF THE ROADWAY THAT HAS BEEN COLDMILLED OR BEFORE RESURFACING OPERATIONS BEGIN, THE CONTRACTOR SHALL HAVE ERECTED "UNEVEN PAVEMENT" SIGNS THAT CONFORM TO THE ABOVE DETAILS. A MINIMUM OF ONE SIGN AT EACH END OF THE IMPROVEMENT WILL BE REQUIRED. THE CONTRACTOR SHALL MAINTAIN THE "UNEVEN PAVEMENT" SIGNS UNTIL THE RESURFACING OPERATIONS ARE COMPLETED.

IF AT ANY TIME THE SIGNS ARE IN PLACE BUT NOT APPLICABLE, THEY SHALL BE TURNED FROM THE VIEW OF MOTORISTS OR COVERED AS DIRECTED BY THE ENGINEER.

THE COST OF FURNISHING, ERECTING, MAINTAINING, AND REMOVING THE REQUIRED SIGNS SHALL BE INCLUDED IN THE CONTRACT.

DRAWN	02-15-89
REVISED	05-08-08
REVISED	10-21-21
REVISED	05-27-22

STD. 9-24

ILLINOIS STANDARD

ROUGH GROOVED SURFACE SIGN

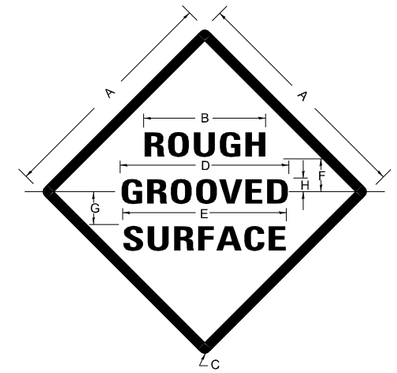

COLORS

LEGEND AND BORDER- BLACK NON-REFLECTORIZED
BACKGROUND- ORANGE REFLECTORIZED

SIGN SIZE	DIMENSIONS							
	A	B	C	D	E	F	G	H
48X48	48.0	24.1	3.0	34.0	33.0	6.0	13.0	3.5

SIGN SIZE	SERIES LINES			MAR-GIN	BOR-DER	BLANK STD.
	1	2	3			
48X48	7C	7C	7C	0.8	1.2	B4-48D

ALL DIMENSIONS IN INCHES

NOTES

PRIOR TO ALLOWING TRAFFIC ON ANY PORTION OF THE ROADWAY THAT HAS BEEN COLDMILLED, THE CONTRACTOR SHALL HAVE ERECTED "ROUGH GROOVED SURFACE" SIGNS THAT CONFORM TO THE ABOVE DETAILS. A MINIMUM OF ONE SIGN AT EACH END OF THE IMPROVEMENT WILL BE REQUIRED. THE CONTRACTOR SHALL MAINTAIN THE "ROUGH GROOVED SURFACE" SIGNS UNTIL THE COLDMILLED SURFACE IS COVERED WITH LEVELING BINDER OR SURFACE COURSE.

IF AT ANY TIME THE SIGNS ARE IN PLACE BUT NOT APPLICABLE, THEY SHALL BE TURNED FROM THE VIEW OF MOTORISTS OR COVERED AS DIRECTED BY THE ENGINEER.

THE COST OF FURNISHING, ERECTING, MAINTAINING, AND REMOVING THE REQUIRED SIGNS SHALL BE INCLUDED IN THE CONTRACT.

DRAWN	02-15-89
REVISED	03-27-08
REVISED	10-21-21
REVISED	05-27-22

STD. 9-23

TEMPORARY HOT–MIX ASPHALT TRANSITIONS

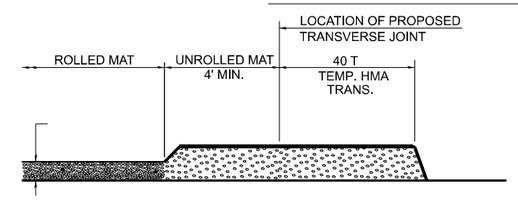

STEP I

1. PLACE HOT-MIX ASPHALT MAT, LENGTH 40 TIMES THE THICKNESS OF THE MAT BEING PLACED PAST THE PROPOSED TRANSVERSE JOINT LOCATION USING NORMAL OPERATING PROCEDURES.
2. EXTREME CARE SHOULD BE TAKEN TO MAINTAIN ENOUGH MATERIAL IN FRONT OF THE SCREED TO MAINTAIN REQUIRED PAVING DEPTH.

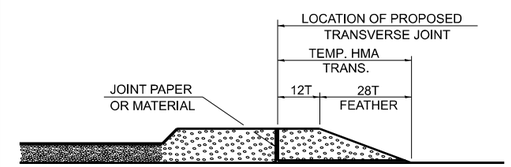

STEP III

1. JOINT PAPER OR OTHER PRESELECTED JOINT MATERIAL IS THEN PLACED IN THE CLEARED AREA AND THE EXCESS ASPHALT USED TO HAND FORM A TRANSITION TO THE DIMENSIONS SHOWN ABOVE.
2. NOTE THAT IN CONSTRUCTING THE TRANSITION, THE MAT DEPTH IS CONTINUED AS PART OF THE TRANSITION BEFORE FORMING THE FEATHER.

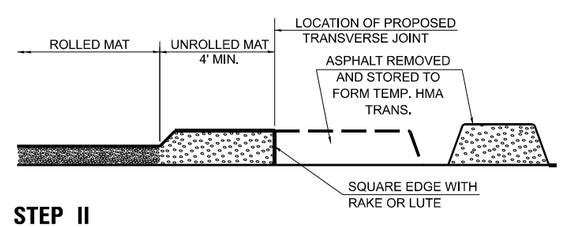

STEP II

1. MOVE THE PAVER OUT OF THE WAY AND REMOVE THE ASPHALT FROM THE AREA OF THE PROPOSED TEMPORARY HOT-MIX ASPHALT TRANSITION.
2. SQUARE UP THE END OF THE MAT WITH A RAKE OR LUTE.
3. NOTE THAT THE MAT WITHIN 4' OF THE END OF JOINT IS NOT TO BE ROLLED AT THIS TIME.

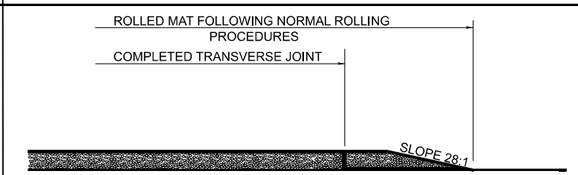

STEP IV

1. COMPLETE TEMPORARY TRANSITION BY ROLLING.
2. TO RESUME PAVING, AT THE JOINT, REMOVE TEMPORARY TRANSITION AND DISPOSE OF THE MATERIAL ACCORDING TO ART. 202.03 OF THE STD. SPECS. (COST INCLUDED IN THE CONTRACT).
3. CONSTRUCTING THE TEMPORARY TRANSITIONS WILL NOT BE PAID FOR SEPARATELY IN ACCORDANCE WITH ARTICLE 406.14 OF THE STANDARD SPECIFICATIONS.

DRAWN	02-15-89
REVISED	01-09-07
REVISED	10-21-21
REVISED	05-26-22

STD. 9-18

MODEL: DISTRICT STANDARDS-8 [Sheet]
FILE NAME: c:\pw_work\pwidot\white\d1066570\D978A74-SHS-DistrictStds.dgn

USER NAME = dylan.white	DESIGNED -	REVISED -
	DRAWN -	REVISED -
	CHECKED -	REVISED -
PLOT DATE = 5/12/2025	DATE -	REVISED -

STATE OF ILLINOIS
DEPARTMENT OF TRANSPORTATION

UNEVEN LANE SIGN, ROUGH GROOVED SURFACE SIGN AND TEMPORARY HMA TRANSITIONS

SCALE: | SHEET 8 OF 8 SHEETS | STA. TO STA.

F.A.S RTE.	SECTION	COUNTY	TOTAL SHEETS	SHEET NO.
904	101RS-6	*	40	40

CONTRACT NO. 78A74

ILLINOIS | FED. AID PROJECT

*JOHNSON/WILLIAMSON