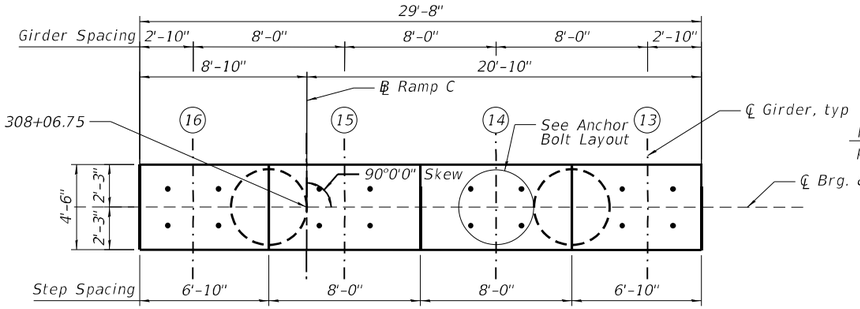

TOP PLAN

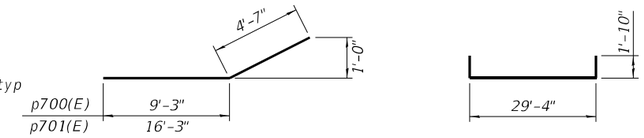

BAR p700(E) & p701(E)

BAR p702(E)

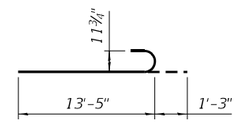

BAR v702(E)

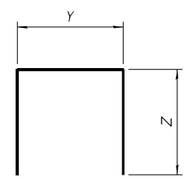

X	Y	Z
s700(E)	4'-8"	8'-3"
s701(E)	4'-8"	5'-5"
s705(E)	2'-9"	4'-4"
s706(E)	2'-9"	5'-1"
s707(E)	4'-2"	10"
u700(E)	4'-6"	3'-4"
u701(E)	4'-0"	2'-9"

BAR X

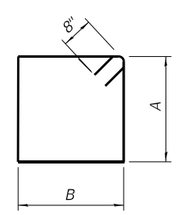

BAR	A	B
s702(E)	3'-9"	2'-9"
s703(E)	3'-11"	2'-9"
s704(E)	4'-2"	2'-9"

BARS s702(E) thru s704(E)

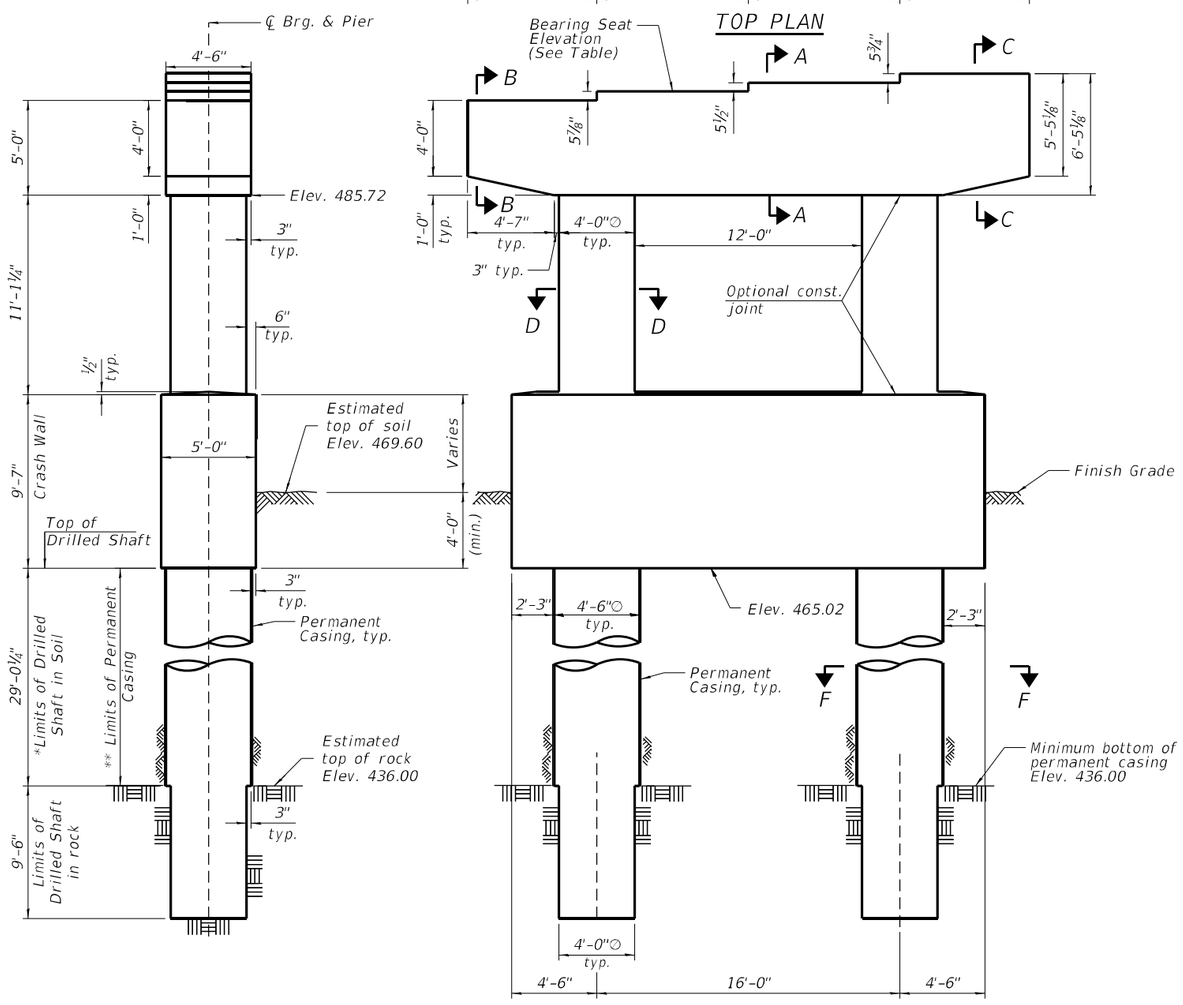

END VIEW

ELEVATION

(Looking Downstation)

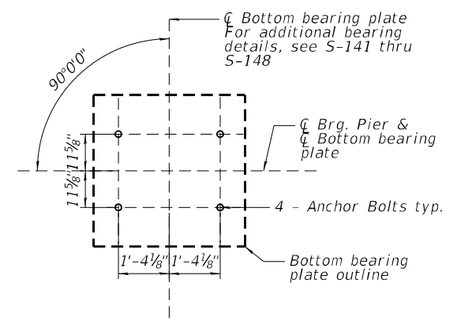

ANCHOR BOLT LAYOUT

BILL OF MATERIAL

	Bar	No.	Size	Length	Shape
	h700(E)	28	#6	24'-8"	
	h701(E)	2	#5	26'-11"	
	h702(E)	10	#5	29'-2"	
	h703(E)	2	#5	18'-1"	
	h704(E)	2	#5	7'-1"	
	h705(E)	6	#5	5'-7"	
	h706(E)	6	#5	8'-8"	
	h707(E)	6	#5	10'-7"	
	h708(E)	6	#5	6'-6"	
	p700(E)	8	#8	13'-10"	
	p701(E)	8	#8	20'-10"	
	p702(E)	7	#10	33'-0"	
	s700(E)	50	#7	21'-2"	
	s701(E)	50	#7	15'-6"	
	s702(E)	2	#6	14'-4"	
	s703(E)	2	#6	14'-8"	
	s704(E)	2	#6	15'-2"	
	s705(E)	20	#6	11'-5"	
	s706(E)	108	#6	12'-11"	
	s707(E)	10	#4	5'-10"	
***	sp700	2	#5	38'-8"	
***	sp701(E)	2	#5	11'-3"	
	u700(E)	20	#6	11'-2"	
	u701(E)	12	#5	9'-6"	
	v700	32	#10	38'-7"	
	v701(E)	32	#10	22'-0"	
	v702(E)	32	#9	14'-8"	
	Structure Excavation			Cu. Yd.	45
	Concrete Structures			Cu. Yd.	82.3
	Reinforcement Bars			Pound	7,180
	Reinforcement Bars, Epoxy Coated			Pound	15,360
	Permanent Casing			Foot	59
	Drilled Shaft in Soil			Cu. Yd.	34.2
	Drilled Shaft in Rock			Cu. Yd.	8.9

***Length is height of spiral

BEARING SEAT ELEVATION	
Girder No.	Elevation
13	492.15
14	491.68
15	491.22
16	490.72

NOTES:

1. Space reinforcement to miss anchor bolts.
2. Pour steps monolithically with cap.
3. For Sections and Details see Sheet S-176.
4. Permanent casing should be twised and pushed until top of bedrock is reached. Any other method should not be allowed. A minimum 3-foot thick soil plug should be maintained while pushing, twisting, and excavating within the casing until top of bedrock is reached.

* The quantities and reinforcement detailing are based on the top of shaft and the estimated top of rock elevations shown and may change based on the actual top of rock encountered at each shaft and the final top of shaft elevation.

** Contractor is responsible for determining the casing thickness and the actual tip elevation to be used. See Article 516.06(d) of the Standard Specifications. Pay limits for the Permanant Casing shall be based on the minimum length shown. Permanent Casing shall extend into rock as needed if the upper zone of rock is fractured and excessive water inflow is encountered.

Michael Baker INTERNATIONAL
200 W Adams Street
Suite 1800
Chicago, IL 60606
P:+1 312,707,8770
FAX: 312,707,8804

USER NAME = DLamb	DESIGNED - EWT	REVISED -
	CHECKED - YC	REVISED -
PLOT SCALE = 0:2.0000 ':" / in.	DRAWN - RBH/DMJ	REVISED -
PLOT DATE = 6/6/2023	CHECKED - MLK	REVISED -

STATE OF ILLINOIS
DEPARTMENT OF TRANSPORTATION

PIER 4C PLAN ELEVATION
STRUCTURE NO. 090-0182

SHEET S-175 OF S-194 SHEETS

F.A.P. RTE.	SECTION	COUNTY	TOTAL SHEETS	SHEET NO.
VAR.	13 (HVB, HB-3) BR-1;R	TAZEWELL	1173	701
		CONTRACT NO. 68C55		
	ILLINOIS	FED. AID PROJECT		

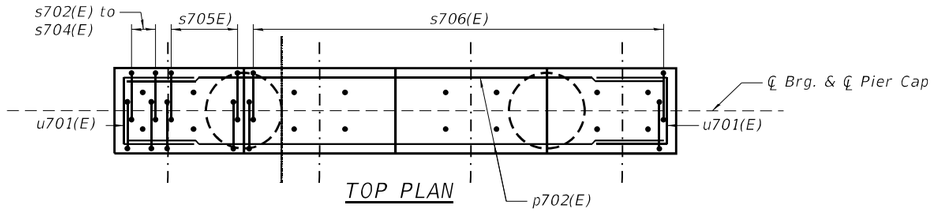

TOP PLAN

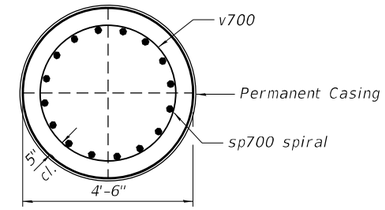

SECTION F-F

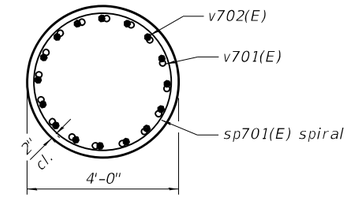

SECTION D-D

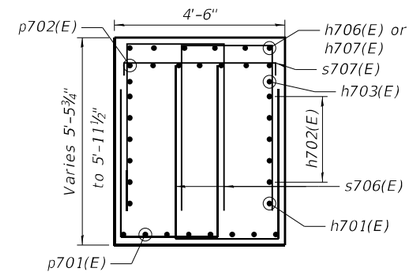

SECTION A-A

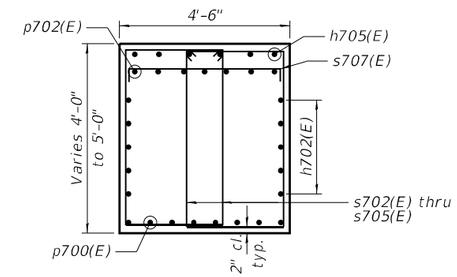

SECTION B-B

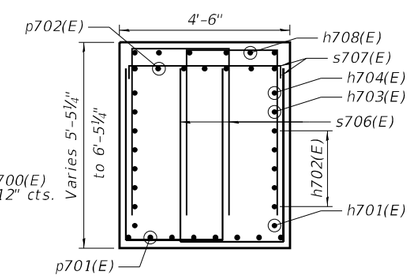

SECTION C-C

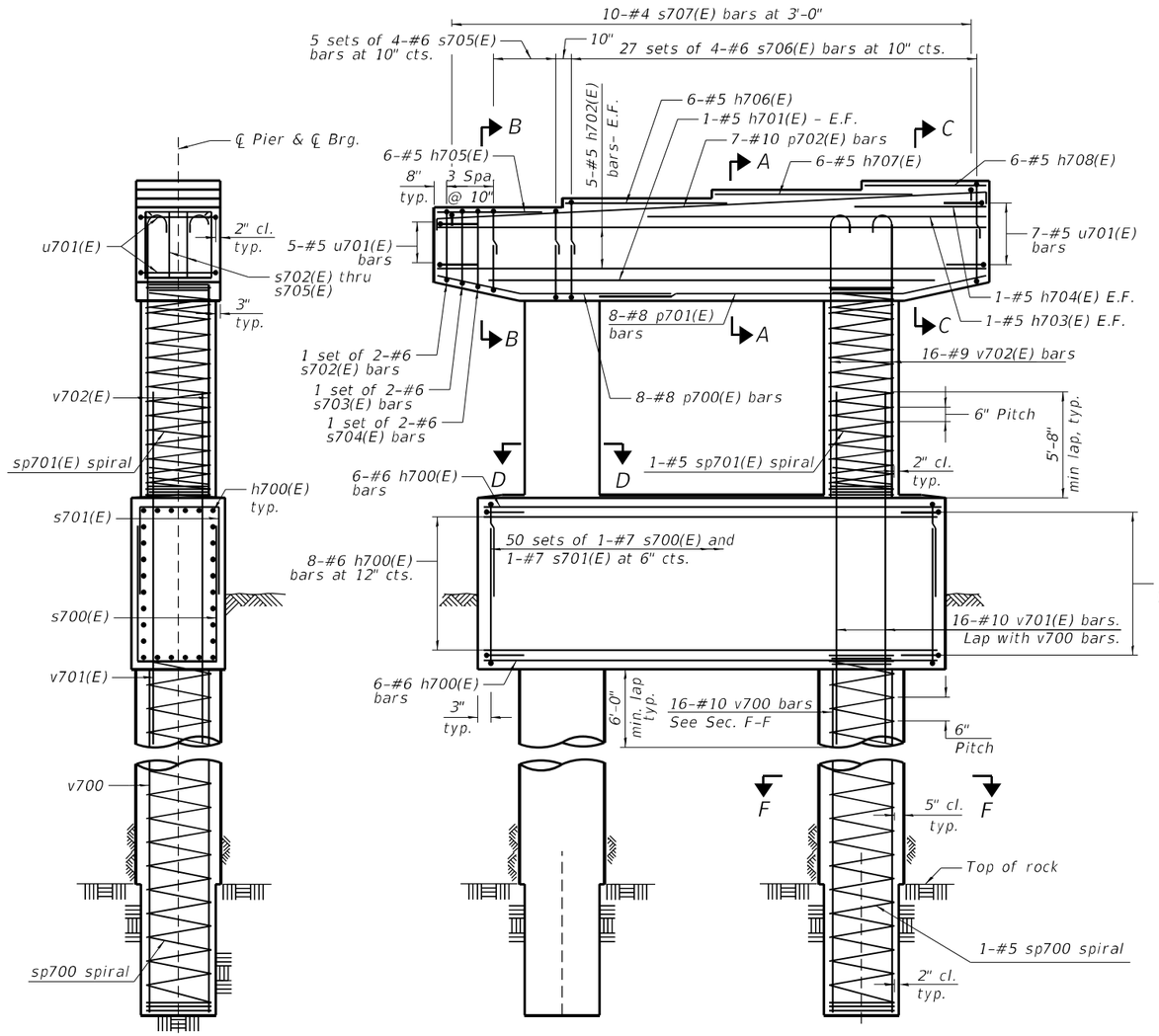

END VIEW

ELEVATION

NOTES:

1. #5 sp700 and #5 sp701(E) - Provide 1 ½ extra turns, shop welded together per AWS D1.4 top and bottom. Extend spiral 2" into crash wall or pier cap. Provide 4-#4 spacers or equivalent.

2. All edges have a ¾" chamfer, unless noted otherwise.

Michael Baker INTERNATIONAL
200 W Adams Street
Suite 1800
Chicago, IL 60606
PH: 312.707.8770
FAX: 312.707.8804

USER NAME = DLamb	DESIGNED - EWT	REVISED -	
	CHECKED - YC	REVISED -	
PLOT SCALE = 0.1667 ' / in.	DRAWN - RBH/DMJ	REVISED -	
PLOT DATE = 6/6/2023	CHECKED - MLK	REVISED -	

STATE OF ILLINOIS
DEPARTMENT OF TRANSPORTATION

PIER 4C DETAILS
STRUCTURE NO. 090-0182

SHEET S-176 OF S-194 SHEETS

F.A.P. RTE.	SECTION	COUNTY	TOTAL SHEETS	SHEET NO.
VAR.	13 (HVB, HB-3) BR-1;R	TAZEWELL	1173	702
		CONTRACT NO. 68C55		
	ILLINOIS	FED. AID PROJECT		

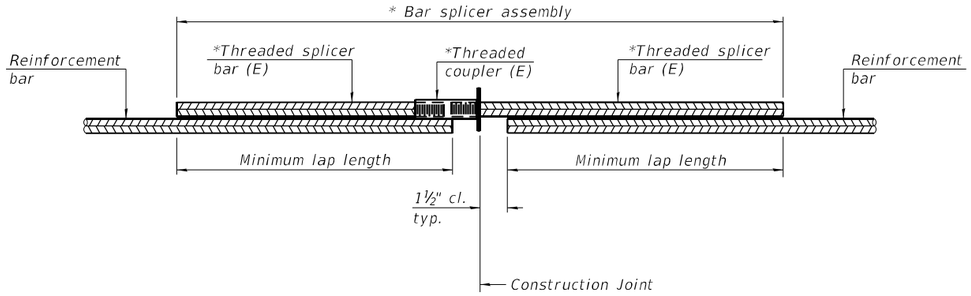

STANDARD BAR SPLICER ASSEMBLY PLAN

(All components shall be provided from one supplier)

Threaded splicer bar length = min. lap length + 1½" + thread length

* Epoxy not required on Bar Splicer Assembly components used in conjunction with black bars.

Location	Bar size	No. assemblies required	Minimum lap length
Pier 1 Cap (Top)	#9(E)	14	6'-5"
Pier 1 Cap (Bott.)	#9(E)	14	5'-8"
Pier 1 Cap (Side)	#5(E)	12	3'-7"
Pier 1 Crashwall	#6(E)	46	4'-4"

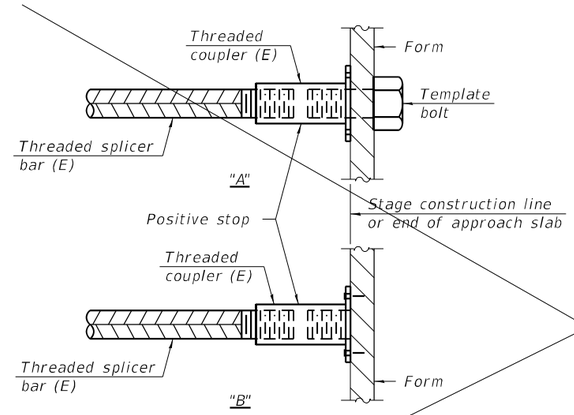

INSTALLATION AND SETTING METHODS

"A" : Set bar splicer assembly by means of a template bolt.
"B" : Set bar splicer assembly by nailing to wood forms or cementing to steel forms.
(E) : Indicates epoxy coating.

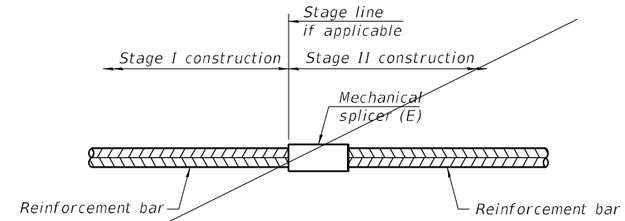

STANDARD MECHANICAL SPLICER

Location	Bar size	No. assemblies required

NOTES:

1. Splicer bars shall be deformed with threaded ends and have a minimum 60 ksi yield strength.
2. All reinforcement shall be lapped and tied to the splicer bars.
3. Bar splicer assemblies shall be epoxy coated according to the requirements for reinforcement bars. See Section 508 of the Standard Specifications.
4. See approved list of bar splicer assemblies and mechanical splicers for alternatives.

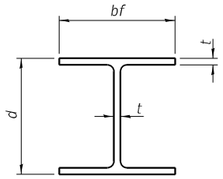

STEEL PILE TABLE

Designation	Depth d	Flange width bf	Web and Flange thickness t	Encasement diameter A
HP 14x117	14¼"	14⅞"	13/16"	30"
x102	14"	14¾"	11/16"	30"
x89	13⅞"	14¾"	⅝"	30"
x73	13⅝"	14⅝"	½"	30"
HP 12x84	12¼"	12¼"	11/16"	24"
x74	12⅛"	12¼"	⅝"	24"
x63	12"	12⅛"	½"	24"
x53	11¾"	12"	7/16"	24"
HP 10x57	10"	10¼"	9/16"	24"
x42	9¾"	10⅛"	7/16"	24"
HP 8x36	8"	8⅛"	7/16"	18"

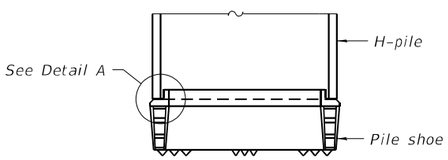

ELEVATION

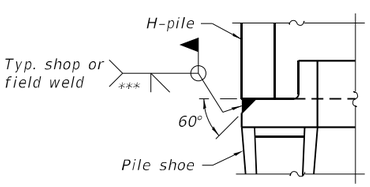

DETAIL A

SHOE ATTACHMENT

Note:
The steel H-piles shall be according to AASHTO M270 Grade 50.

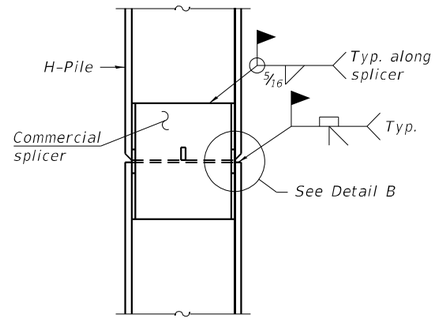

ELEVATION

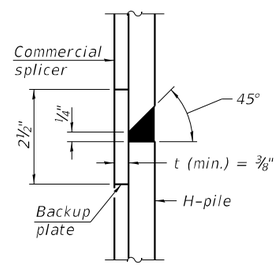

DETAIL "B"

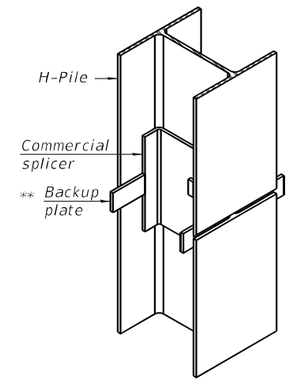

ISOMETRIC VIEW

WELDED COMMERCIAL SPLICE

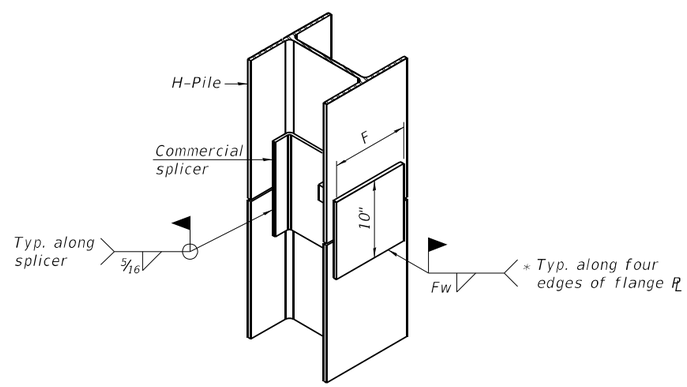

ISOMETRIC VIEW

WELDED COMMERCIAL SPLICE ALTERNATE

* Interrupt welds ¼" from end of web and/or each flange.

** Remove portions of backup plates that extend outside the flanges.

*** Weld size per pile shoe manufacturer (5/16" min.).

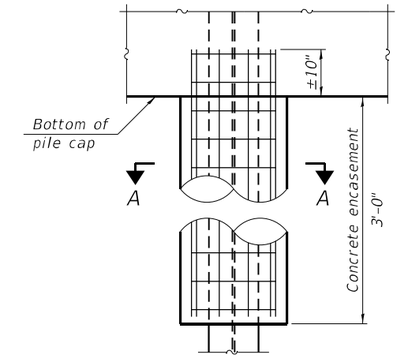

ELEVATION

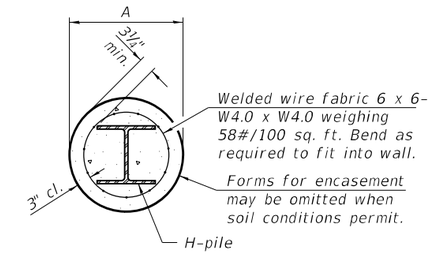

SECTION A-A

INDIVIDUAL PILE CONCRETE ENCASEMENT
(when specified)

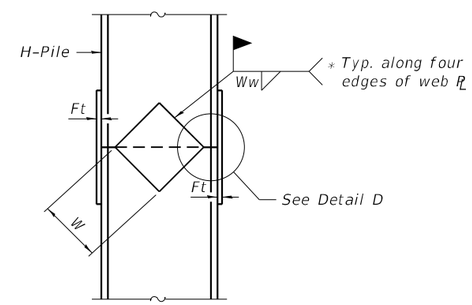

ELEVATION

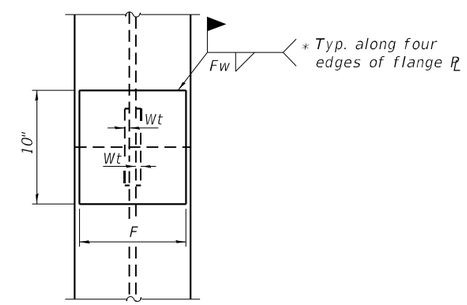

END VIEW

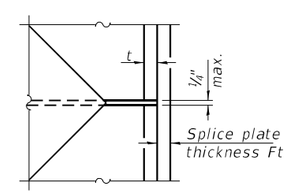

DETAIL D

Designation	F	Ft	Fw	W	Wt	Ww
HP 14x117	12½"	1"	⅞"	7¾"	⅝"	½"
x102	12½"	⅞"	¾"	7¾"	⅝"	½"
x89	12½"	¾"	11/16"	7¾"	⅝"	½"
x73	12½"	⅝"	9/16"	7¾"	⅝"	½"
HP 12x84	10"	⅞"	11/16"	6½"	⅝"	½"
x74	10"	⅞"	11/16"	6½"	⅝"	½"
x63	10"	⅝"	½"	6½"	½"	⅜"
x53	10"	⅝"	½"	6½"	½"	⅜"
HP 10x57	8"	¾"	9/16"	5¼"	½"	⅜"
x42	8"	⅝"	9/16"	5¼"	½"	⅜"
HP 8x36	7"	⅝"	7/16"	4¼"	½"	⅜"

WELDED PLATE FIELD SPLICE

F-HP 1-1-2020

Michael Baker INTERNATIONAL
200 W Adams Street
Suite 1800
Chicago, IL 60606
PH: 312.707.8770
FAX: 312.707.8804

USER NAME = DLamb	DESIGNED -	REVISED -	
	CHECKED -	REVISED -	
PLOT SCALE = 0:20.0000 ':" / in.	DRAWN -	REVISED -	
PLOT DATE = 6/6/2023	CHECKED -	REVISED -	

STATE OF ILLINOIS
DEPARTMENT OF TRANSPORTATION

HP PILE DETAILS
STRUCTURE NO. 090-0182

SHEET S-178 OF S-194 SHEETS

F.A.P. RTE.	SECTION	COUNTY	TOTAL SHEETS	SHEET NO.
VAR.	13 (HVB, HB-3) BR-1;R	TAZEWELL	1173	704
		CONTRACT NO. 68C55		
		ILLINOIS FED. AID PROJECT		

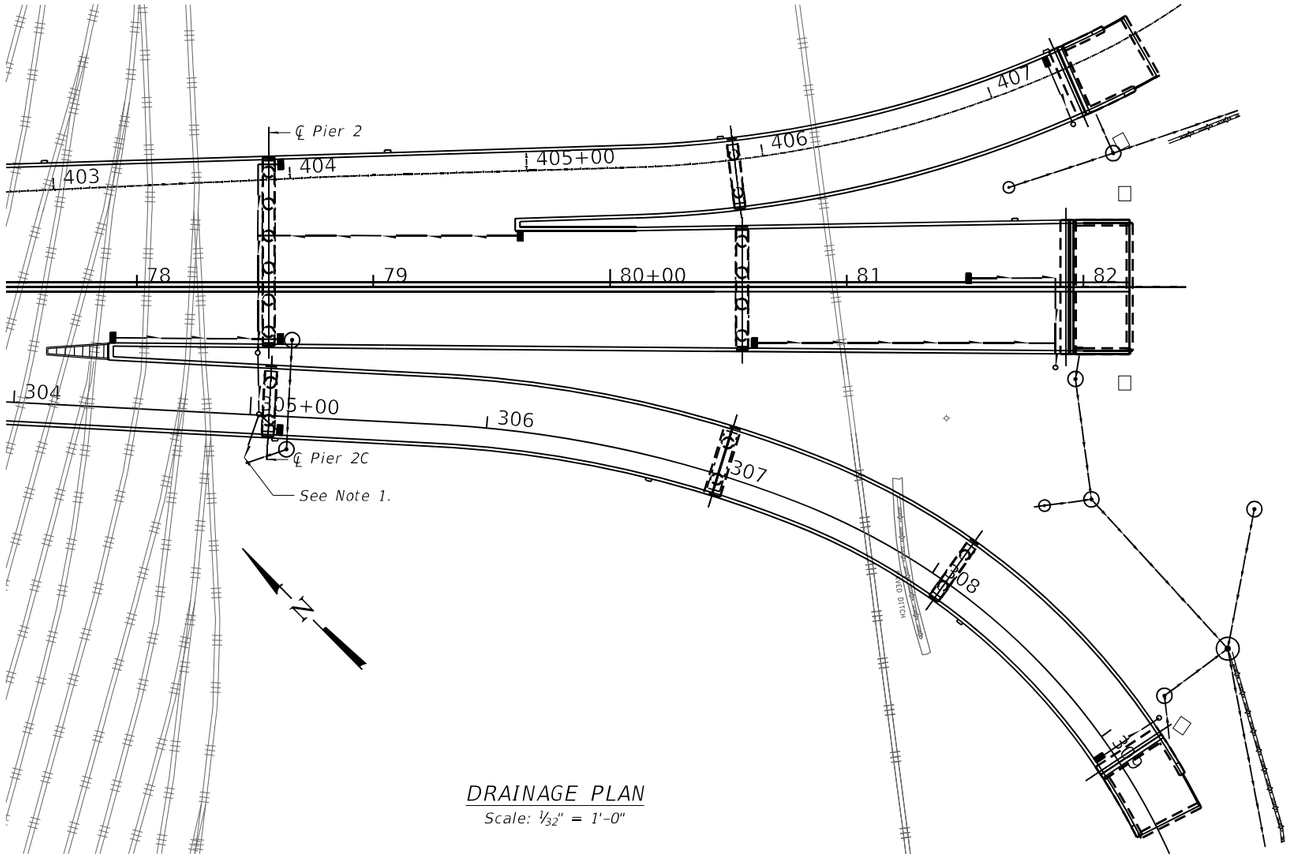

LEGEND

- DS-11 Scupper
- Pipe for Drainage System on bridge, arrow indicates direction of flow
- Manhole
- Pipe Drains, see Drainage Plans
- Paved Ditch, see Drainage Plans

NOTES:

1. Drainage System shall connect to existing culvert or drainage structure. See drainage schedule for stationing and offset of drainage structure.
2. S.S. denotes stainless steel.
3. Provide structural support from proposed deck slab for drain pipe per Manufacturer's recommendations, not to exceed 5' cts. Cost included with Drainage System.
4. All pipes, pipe fittings, collars, inserts, brackets, and other miscellaneous hardware shall be included with the cost of Drainage System.

BILL OF MATERIALS

Item	Unit	Total
Drainage System	L. Sum	1

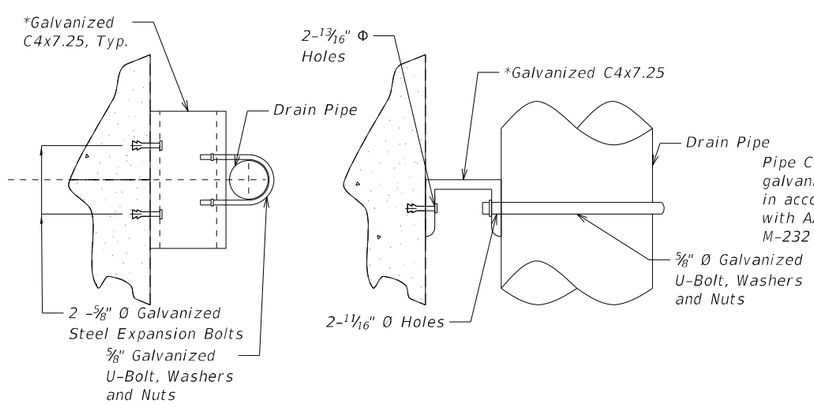

PIPE SUPPORT DETAIL

* Provide curved galvanized C6x8.2 to fit Round Pier Columns where needed

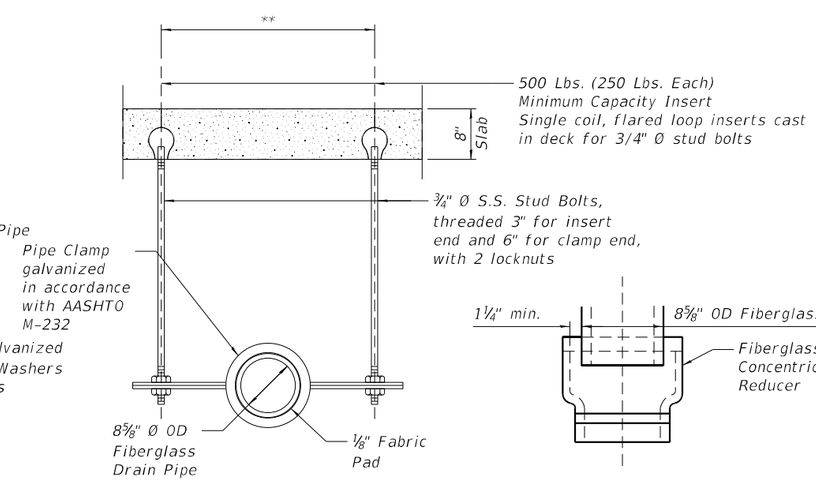

PIPE SUPPORT DETAIL

** Dimension as required by Pipe Clamp

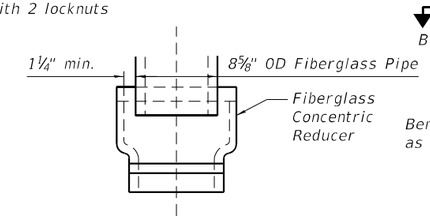

REDUCER DETAIL

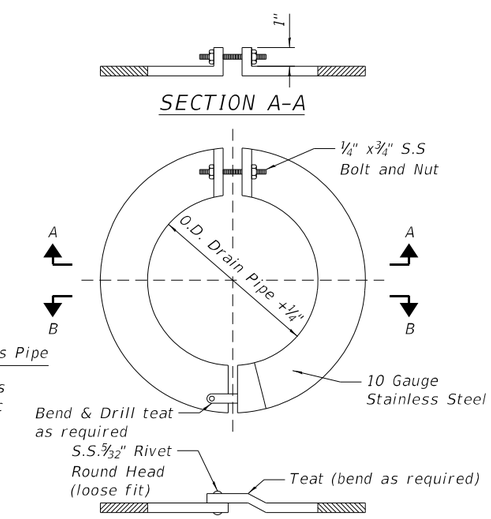

SECTION A-A

SECTION B-B

DETAIL OF EXPANSION COLLAR

Michael Baker INTERNATIONAL 200 W Adams Street Suite 1800 Chicago, IL 60606 PH: 312.707.8770 FAX: 312.707.8804	USER NAME = DLamb	DESIGNED - MLK	REVISED -
		CHECKED - JMK	REVISED -
	PLOT SCALE = 0.1667 ' / in.	DRAWN - DMJ/RBH	REVISED -
	PLOT DATE = 6/6/2023	CHECKED - JMK	REVISED -

STATE OF ILLINOIS
DEPARTMENT OF TRANSPORTATION

DRAINAGE SYSTEM DETAILS 1
STRUCTURE NO. 090-0182

SHEET S-179 OF S-194 SHEETS

F.A.P. RTE.	SECTION	COUNTY	TOTAL SHEETS	SHEET NO.
VAR.	13 (HVB, HB-3) BR-1;R	TAZEWELL	1173	705
		CONTRACT NO. 68C55		
	ILLINOIS	FED. AID PROJECT		

MODEL: Default
FILE NAME: pw:\\mb-us-pw.bentley.com:mb-us-pw-03\Documents\Chicago IL\01 Projects\179740 IDOT Cedar\SHEAT PHII\5.0 CADD\CAD Sheets\0900182-68C55-s179-drain1.dgn

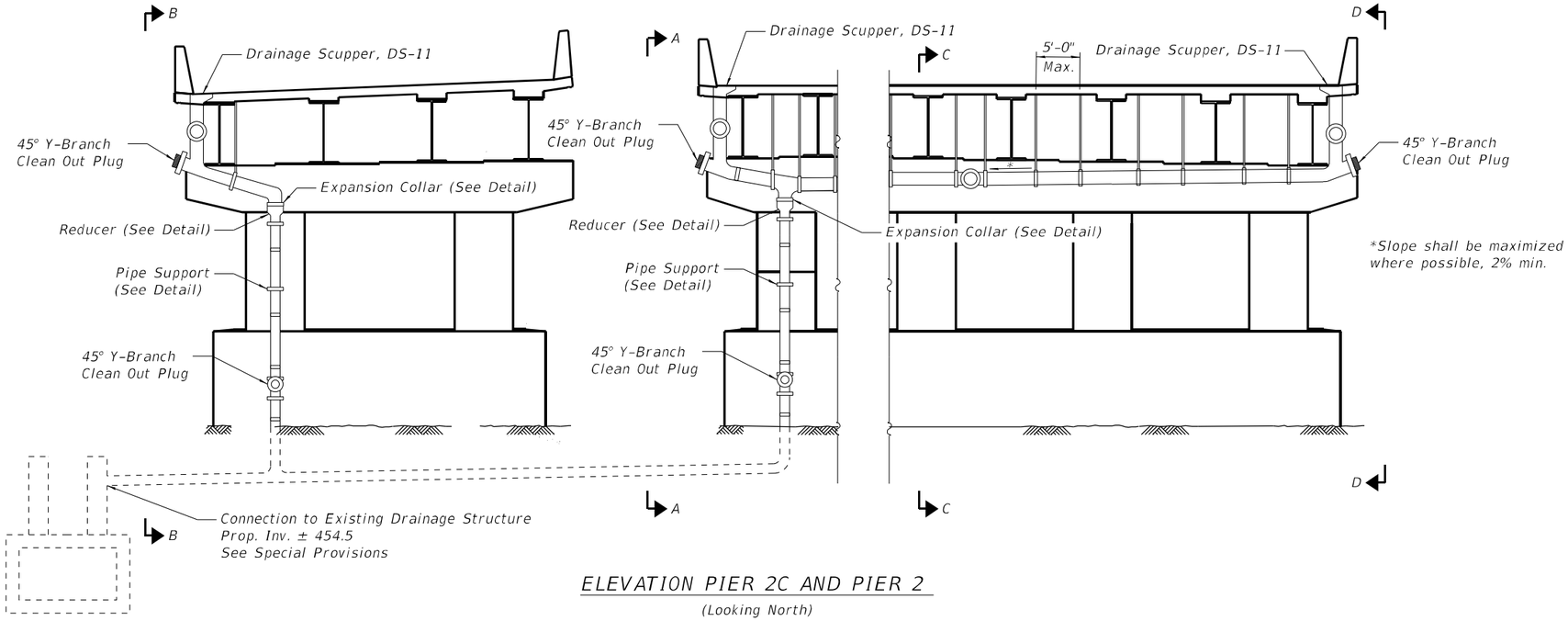

ELEVATION PIER 2C AND PIER 2

(Looking North)

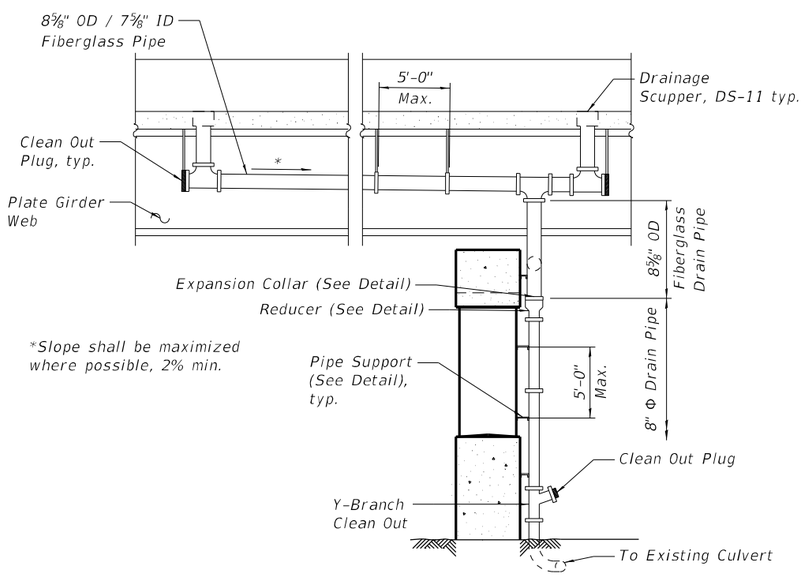

VIEW A-A

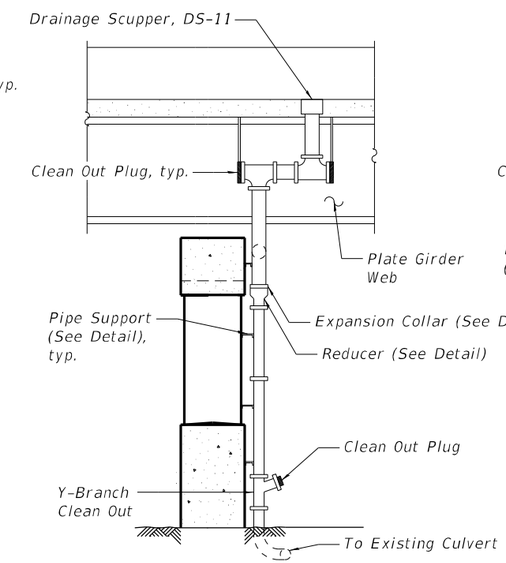

VIEW B-B

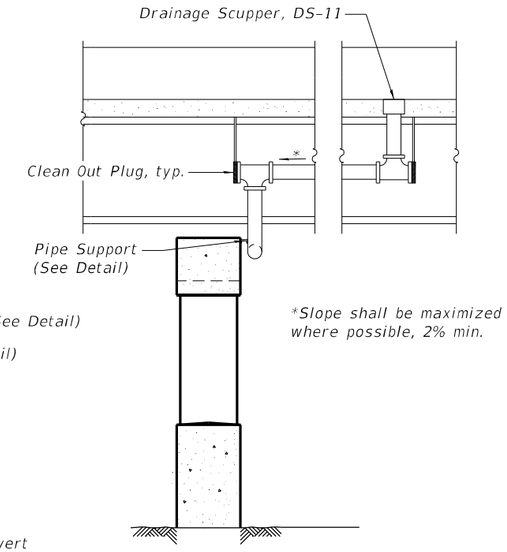

SECTION C-C

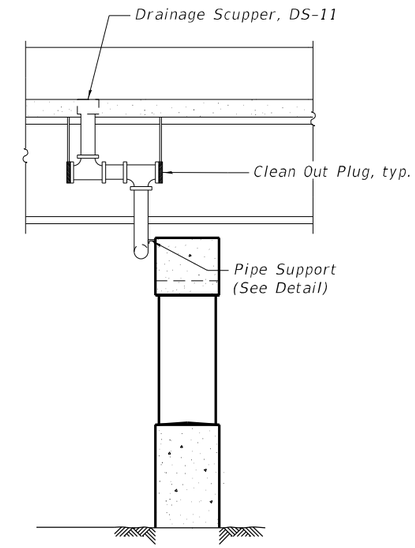

VIEW D-D

NOTES:

1. For drainage system notes, see Sheet S-179.

Michael Baker INTERNATIONAL 200 W Adams Street Suite 1800 Chicago, IL 60606 PH: 312.707.8770 FAX: 312.707.8804	USER NAME = DLamb	DESIGNED - MLK	REVISED -	STATE OF ILLINOIS DEPARTMENT OF TRANSPORTATION	DRAINAGE SYSTEM DETAILS 2 STRUCTURE NO. 090-0182
		CHECKED - JMK	REVISED -		
	PLOT SCALE = 0.1667 ' / in.	DRAWN - DMJ/RBH	REVISED -		
	PLOT DATE = 6/6/2023	CHECKED - JMK	REVISED -		SHEET S-180 OF S-194 SHEETS

F.A.P. RTE.	SECTION	COUNTY	TOTAL SHEETS	SHEET NO.
VAR.	13 (HVB, HB-3) BR-1:R	TAZEWELL	1173	706
		CONTRACT NO. 68C55		
	ILLINOIS	FED. AID PROJECT		

MODEL: Default
FILE NAME: pw:\\mb-us-pw.bentley.com:mb-us-pw-03\Documents\Chicago IL\01 Projects\179740 IDOT Ceda/SIE+ Phll\5.0 CADD\CAD Sheets\0900182-68C55-180-Drain2.dgn

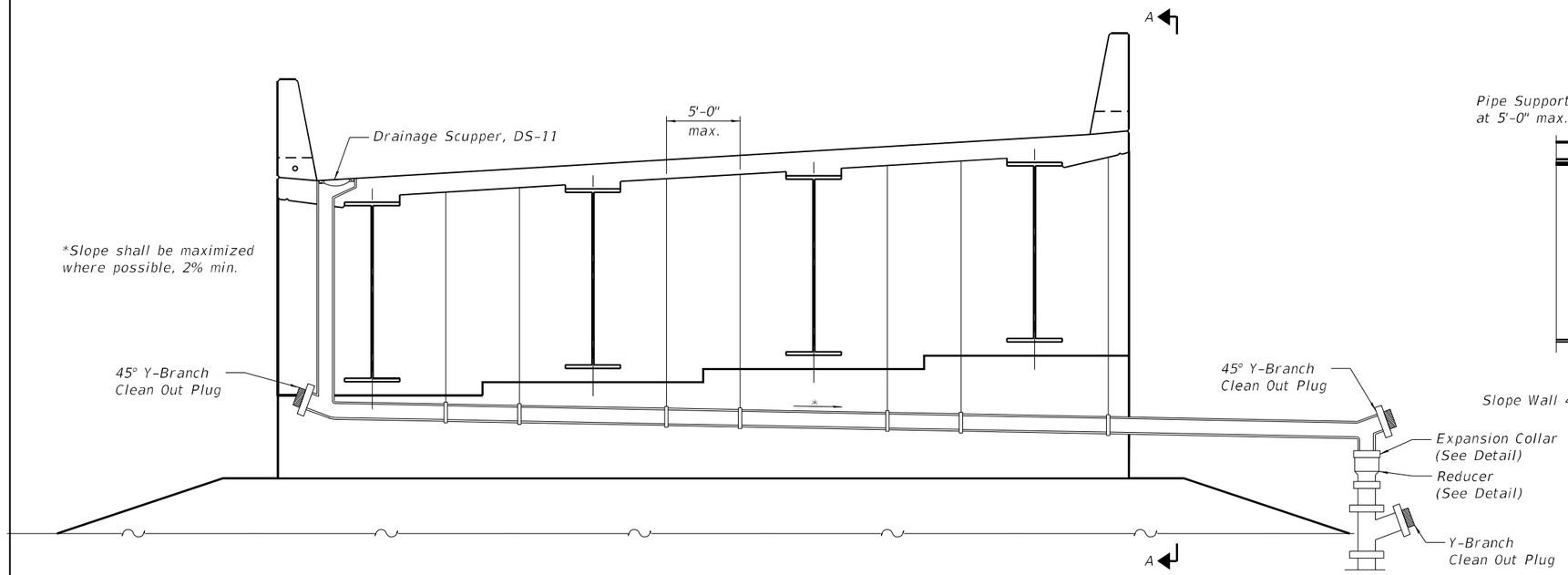

ELEVATION - S. ABUTMENT D

(Looking South, S. Abutment C mirrored)

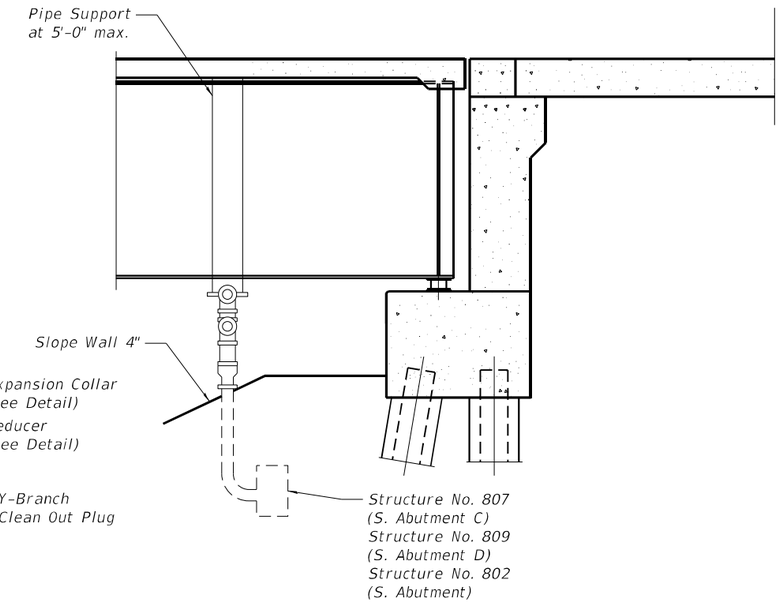

VIEW A-A

(S. Abutment D Shown and S. Abutment C similar)

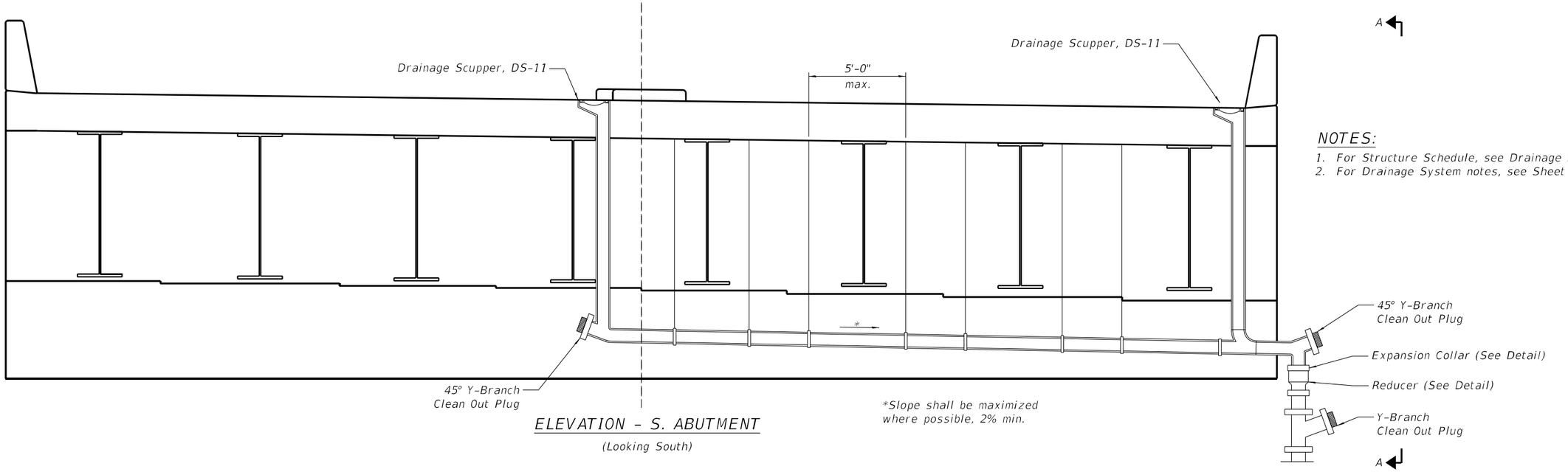

*Slope shall be maximized
where possible, 2% min.

ELEVATION - S. ABUTMENT

(Looking South)

NOTES:

1. For Structure Schedule, see Drainage Plans.
2. For Drainage System notes, see Sheet S-179.

MODEL: Default
FILE NAME: pw:\\mis-us-ow.bentley.com:mis-ow-03\Documents\Chicago IL\01 Projects\179740 IDOT Ceda\SIEx Phl15.0 CADD\CAD Sheets\0900182-68C55-181-Drain3.dgn

Michael Baker INTERNATIONAL
200 W Adams Street
Suite 1800
Chicago, IL 60606
P:+1 312.707.8770
FAX: 312.707.8804

USER NAME = DLamb	DESIGNED - MLK	REVISED -	
	CHECKED - JMK	REVISED -	
PLOT SCALE = 0:2.0000 ':" / in.	DRAWN - RBH/DMJ	REVISED -	
PLOT DATE = 6/6/2023	CHECKED - JMK	REVISED -	

STATE OF ILLINOIS
DEPARTMENT OF TRANSPORTATION

DRAINAGE SYSTEM DETAILS 3
STRUCTURE NO. 090-0182

SHEET S-181 OF S-194 SHEETS

F.A.P. RTE.	SECTION	COUNTY	TOTAL SHEETS	SHEET NO.
VAR.	13 (HVB, HB-3) BR-1:R	TAZEWELL	1173	707
		CONTRACT NO. 68C55		
	ILLINOIS	FED. AID PROJECT		

BORING LOG BSB-01

Wang Engineering
wangeng@wangeng.com
1145 N. Main Street
Lombard/IL/60148
Telephone: 6309539928
Fax: 6309539938

WEI Job No.: 707-21-01

Client: Michael Baker International
Project: Cedar Street Extension at IL Route 29
Location: Tazewell County, IL

Datum: NAVD 88
Elevation: 486.83 ft
North: 1456936.18 ft
East: 2457684.18 ft
Station: 74+37.04
Offset: 28.53 LT

Elevation (ft)	SOIL AND ROCK DESCRIPTION	Depth (ft)	Sample No.	SPT Values (blw/6 in)	Qu (tsf)	Moisture Content (%)
	15-inch thick ASPHALT --PAVEMENT--					
485.6	Very stiff, brown and gray CLAY LOAM, trace gravel --FILL-- --RDR 2--		1	7 6 6	2.46 B	19
		5	2	4 5 7	2.00 F	14
			3	4 5 5	2.00 F	12
		10	4	4 4 5	2.38 B	12
			5	4 4 8	3.77 B	9
		15	6	3 5 5	2.00 F	14
			7	4 6 13	3.12 B	9
468.8	Medium dense, brown, gravelly LOAM; moist --FILL-- --RDR 2--	20	8	2 4 6	NP	12

Elevation (ft)	SOIL AND ROCK DESCRIPTION	Depth (ft)	Sample No.	SPT Values (blw/6 in)	Qu (tsf)	Moisture Content (%)
466.3	Medium dense, black and brown SANDY GRAVEL; wet --FILL-- --RDR 2--		9	7 6 7	NP	11
463.8	Very stiff to hard, brown and gray CLAY LOAM, trace gravel --FILL-- --RDR 2--	25	10	5 8 11	3.53 B	10
			11	6 8 8	4.26 B	10
		30	12	4 6 9	4.67 B	11
453.8	--hard drilling; 33.5 to 34.5 feet-- --possible cobbles--		13	50/1"	NR	
452.3	Loose, gray SANDY LOAM; wet --FILL-- --RDR 2--	35	14	3 2 4	NP	24
448.8	Stiff to very stiff, brown and gray SILTY CLAY to SILTY CLAY LOAM --RDR 2--	40	15	2 3 4	1.64 B	28

GENERAL NOTES

Begin Drilling: 06-10-2019 Complete Drilling: 06-10-2019
Drilling Contractor: Wang Testing Services Drill Rig: 17B57T [91%]
Driller: N&A&B Logger: F. Bozga Checked by: C. Marin
Drilling Method: 3.25" HSA; boring backfilled upon completion

WATER LEVEL DATA

While Drilling: 20.50 ft
At Completion of Drilling: 58.00 ft
Time After Drilling: NA
Depth to Water: NA

The stratification lines represent the approximate boundary between soil types; the actual transition may be gradual.

WANGENG 707201.GPJ WANGENG.GDT 7/31/20

BORING LOG BSB-01

Wang Engineering
wangeng@wangeng.com
1145 N. Main Street
Lombard/IL/60148
Telephone: 6309539928
Fax: 6309539938

WEI Job No.: 707-21-01

Client: Michael Baker International
Project: Cedar Street Extension at IL Route 29
Location: Tazewell County, IL

Datum: NAVD 88
Elevation: 486.83 ft
North: 1456936.18 ft
East: 2457684.18 ft
Station: 74+37.04
Offset: 28.53 LT

Elevation (ft)	SOIL AND ROCK DESCRIPTION	Depth (ft)	Sample No.	SPT Values (blw/6 in)	Qu (tsf)	Moisture Content (%)
	--trace organic matter--	45	16	4 4 7	2.05 B	23
	--L_L(%)=37, P_I(%)=19-- --%Gravel=0.0-- --%Sand=4.7-- --%Silt=70.0-- --%Clay=25.2-- --A-6 (18)-- --3-inch thick, sand lens--	50	17	2 4 5	1.23 B	25
	--2-inch thick, sand lens; wet--	55	18	3 4 6	1.07 R	27
430.1	Medium dense to very dense, gray SANDY GRAVEL; saturated --RDR 2 to 3--	60	19	10 11 11	NP	9

Elevation (ft)	SOIL AND ROCK DESCRIPTION	Depth (ft)	Sample No.	SPT Values (blw/6 in)	Qu (tsf)	Moisture Content (%)
	--possible cobbles--	65	20	9 10 12	NP	15
	--possible cobbles--	70	21	29 50/4"	NP	12
	--change in drilling; no chatter at 71 feet--					
415.8	Very dense, gray SHALE					
		75	22	50/5"	NP	8
411.8	Very weak, dark greenish gray, very poor to good rock mass quality, SHALE, closely spaced, moderately to highly weathered, horizontal joints, with none to < 0.05-inch opening, slicken walls. --Run 1: 75.0 to 80.0 feet-- --Recovery = 100%-- --RQD = 78%-- --Q_u at 77.5 feet=1373 psi--	80	23	CORE		

GENERAL NOTES

Begin Drilling: 06-10-2019 Complete Drilling: 06-10-2019
Drilling Contractor: Wang Testing Services Drill Rig: 17B57T [91%]
Driller: N&A&B Logger: F. Bozga Checked by: C. Marin
Drilling Method: 3.25" HSA; boring backfilled upon completion

WATER LEVEL DATA

While Drilling: 20.50 ft
At Completion of Drilling: 58.00 ft
Time After Drilling: NA
Depth to Water: NA

The stratification lines represent the approximate boundary between soil types; the actual transition may be gradual.

WANGENG 707201.GPJ WANGENG.GDT 7/31/20

BORING LOG BSB-01

Wang Engineering
wangeng@wangeng.com
1145 N. Main Street
Lombard/IL/60148
Telephone: 6309539928
Fax: 6309539938

WEI Job No.: 707-21-01

Client: Michael Baker International
Project: Cedar Street Extension at IL Route 29
Location: Tazewell County, IL

Datum: NAVD 88
Elevation: 486.83 ft
North: 1456936.18 ft
East: 2457684.18 ft
Station: 74+37.04
Offset: 28.53 LT

Elevation (ft)	SOIL AND ROCK DESCRIPTION	Depth (ft)	Sample No.	SPT Values (blw/6 in)	Qu (tsf)	Moisture Content (%)
	--Run 2: 80.0 to 85.0 feet-- --Recovery = 100%-- --RQD = 0%--		24	CORE		
	--Run 3: 85.0 to 90.0 feet-- --Recovery = 75%-- --RQD = 65%-- --Q_u at 85.0 feet=301 psi--	85	25	CORE		
396.8	Boring terminated at 90.00 ft	90				
		95				
		100				

GENERAL NOTES

Begin Drilling: 06-10-2019 Complete Drilling: 06-10-2019
Drilling Contractor: Wang Testing Services Drill Rig: 17B57T [91%]
Driller: N&A&B Logger: F. Bozga Checked by: C. Marin
Drilling Method: 3.25" HSA; boring backfilled upon completion

WATER LEVEL DATA

While Drilling: 20.50 ft
At Completion of Drilling: 58.00 ft
Time After Drilling: NA
Depth to Water: NA

The stratification lines represent the approximate boundary between soil types; the actual transition may be gradual.

WANGENG 707201.GPJ WANGENG.GDT 7/31/20

MODEL: Default
FILE NAME: pw:\\mb-us-pw.bentley.com:mb-us-pw-03\Documents\Chicago IL\01 Projects\179740 IDOT Cedar\SHEA Phll\5.0 CADD\CAD Sheets\090182-68C55-182-Bor1.dgn

Michael Baker INTERNATIONAL
200 W Adams Street
Suite 1800
Chicago, IL 60606
PH: 312.707.8770
FAX: 312.707.8804

USER NAME = DLamb	DESIGNED - JMK	REVISED -	
	CHECKED - ADM	REVISED -	
PLOT SCALE = 0.1667 ' / in.	DRAWN - DMJ	REVISED -	
PLOT DATE = 6/6/2023	CHECKED - JMK	REVISED -	

STATE OF ILLINOIS
DEPARTMENT OF TRANSPORTATION

BORING LOGS 1
STRUCTURE NO. 090–0182

SHEET S-182 OF S-194 SHEETS

F.A.P. RTE.	SECTION	COUNTY	TOTAL SHEETS	SHEET NO.
VAR.	13 (HVB, HB-3) 8R-1:R	TAZEWELL	1173	708
		CONTRACT NO. 68C55		
	ILLINOIS	FED. AID PROJECT		

BORING LOG BSB-02

WEI Job No.: 707-21-01

Wang Engineering
wangeng@wangeng.com
1145 N. Main Street
Lombard/IL/60148
Telephone: 6309539928
Fax: 6309539938

Client: Michael Baker International
Project: Cedar Street Extension at IL Route 29
Location: Tazewell County, IL

Datum: NAVD 88
Elevation: 486.40 ft
North: 1456904.62 ft
East: 2457642.60 ft
Station: 300+82.50
Offset: 8.91' LT

Elevation (ft)	SOIL AND ROCK DESCRIPTION	Depth (ft)	Sample Type / recovery	Sample No.	SPT Values (blw/6 in)	Qu (tsf)	Moisture Content (%)
486.23	3-inch thick ASPHALT --PAVEMENT--						
485.4 / 485.0	9-inch thick CONCRETE --PAVEMENT--						
	Dark brown, gravelly LOAM --BASE COURSE--						
	Very stiff to hard, brown and gray CLAY LOAM to SILTY CLAY LOAM, trace gravel --FILL-- --RDR 2--	5		1	4 6 9	5.25 E	11
				2	7 7 6	3.77 E	13
				3	4 5 6	2.00 F	11
	--L_L(%)=23, P_I(%)=13-- --%Gravel=8.7-- --%Sand=28.0-- --%Silt=45.0-- --%Clay=18.3-- --A-4 (3)-- --little gravel--	10		4	4 4 4	2.38 E	12
				5	4 5 8	4.43 E	13
		15		6	4 6 9	NR	
				7	4 6 8	3.85 E	14
468.4	Medium dense, brown GRAVELLY LOAM; wet --FILL-- --RDR 2--	20		8	8 10 9	NP	15
465.9	Medium stiff, brown SILTY CLAY LOAM, some gravel --FILL-- --RDR 2--			9	4 3 3	0.75 P	18
463.4	Very stiff to hard, brown and gray CLAY LOAM, trace to some gravel --FILL-- --RDR 2--	25		10	5 7 8	3.77 B	12
				11	6 10 9	> 4.50 P	11
458.4	Very stiff, brown and black SILTY CLAY --FILL-- --RDR 2--	30		12	5 6 8	2.38 B	18
451.7	Brown SANDY GRAVEL; wet --FILL--	35		13	5 7 23	3.61 B	20
449.7	Stiff, gray CLAY to SILTY CLAY, trace organic matter --RDR 2--	40		14	3 3 6	1.50 P	28

GENERAL NOTES

Begin Drilling: 06-11-2019 Complete Drilling: 06-11-2019
Drilling Contractor: Wang Testing Services Drill Rig: 17B57T [91%]
Driller: N&A&B Logger: F. Bozga Checked by: C. Marin
Drilling Method: 2.25" HSA to 10 ft, mud rotary thereafter, boring backfilled upon completion

WATER LEVEL DATA

While Drilling: 18.00 ft
At Completion of Drilling: 5 ft mud
Time After Drilling: NA
Depth to Water: NA
The stratification lines represent the approximate boundary between soil types; the actual transition may be gradual.

BORING LOG BSB-02

WEI Job No.: 707-21-01

Wang Engineering
wangeng@wangeng.com
1145 N. Main Street
Lombard/IL/60148
Telephone: 6309539928
Fax: 6309539938

Client: Michael Baker International
Project: Cedar Street Extension at IL Route 29
Location: Tazewell County, IL

Datum: NAVD 88
Elevation: 486.40 ft
North: 1456904.62 ft
East: 2457642.60 ft
Station: 300+82.50
Offset: 8.91' LT

Elevation (ft)	SOIL AND ROCK DESCRIPTION	Depth (ft)	Sample Type / recovery	Sample No.	SPT Values (blw/6 in)	Qu (tsf)	Moisture Content (%)
444.7	Stiff to very stiff, brown and gray SILTY CLAY --RDR 2--						
		45		15	4 5 7	2.38 B	25
	--1-inch thick, silt lens; wet--	50		16	2 3 3	1.56 B	24
	--2-inch thick, silt lens; wet--	55		17	2 3 4	1.31 B	27
428.9	--rig chatter at 57.5 feet-- Dense, gray, GRAVELLY LOAM; wet --RDR 3--	60		18	7 16 28	NP	11
424.7	Dense to very dense, gray GRAVELLY SAND; wet to saturated --RDR 2 to 4--	65		19	17 17 17	NP	13
417.7	Very dense, gray to dark gray SILTY SAND --RDR 5--	70		20	60/6"	NP	17
	--MSPT 1--			21	100/3"	NP	15
	--MSPT 2--	75		22	100/2.5"	NP	13
	--MSPT 3--			23	100/2.25"	NP	11
	--MSPT 4--	80		24	100/3"	NP	14

GENERAL NOTES

Begin Drilling: 06-11-2019 Complete Drilling: 06-11-2019
Drilling Contractor: Wang Testing Services Drill Rig: 17B57T [91%]
Driller: N&A&B Logger: F. Bozga Checked by: C. Marin
Drilling Method: 2.25" HSA to 10 ft, mud rotary thereafter, boring backfilled upon completion

WATER LEVEL DATA

While Drilling: 18.00 ft
At Completion of Drilling: 5 ft mud
Time After Drilling: NA
Depth to Water: NA
The stratification lines represent the approximate boundary between soil types; the actual transition may be gradual.

BORING LOG BSB-02

WEI Job No.: 707-21-01

Wang Engineering
wangeng@wangeng.com
1145 N. Main Street
Lombard/IL/60148
Telephone: 6309539928
Fax: 6309539938

Client: Michael Baker International
Project: Cedar Street Extension at IL Route 29
Location: Tazewell County, IL

Datum: NAVD 88
Elevation: 486.40 ft
North: 1456904.62 ft
East: 2457642.60 ft
Station: 300+82.50
Offset: 8.91' LT

Elevation (ft)	SOIL AND ROCK DESCRIPTION	Depth (ft)	Sample Type / recovery	Sample No.	SPT Values (blw/6 in)	Qu (tsf)	Moisture Content (%)
	--MSPT 5--			25	100/3"	NP	15
402.7	--MSPT 6-- Boring terminated at 83.70 ft			26	100/2"	NP	14
		85					
		90					
		95					
		100					

GENERAL NOTES

Begin Drilling: 06-11-2019 Complete Drilling: 06-11-2019
Drilling Contractor: Wang Testing Services Drill Rig: 17B57T [91%]
Driller: N&A&B Logger: F. Bozga Checked by: C. Marin
Drilling Method: 2.25" HSA to 10 ft, mud rotary thereafter, boring backfilled upon completion

WATER LEVEL DATA

While Drilling: 18.00 ft
At Completion of Drilling: 5 ft mud
Time After Drilling: NA
Depth to Water: NA
The stratification lines represent the approximate boundary between soil types; the actual transition may be gradual.

WANGENGINC 707291.GPJ WANGENG.GDT 3/12/20

BORING LOG BSB-03

WEI Job No.: 707-21-01

Wang Engineering
wangeng@wangeng.com
1145 N. Main Street
Lombard/IL/60148
Telephone: 6309539928
Fax: 6309539938

Client: Michael Baker International
Project: Cedar Street Extension at IL Route 29
Location: Tazewell County, IL

Datum: NAVD 88
Elevation: 456.38 ft
North: 1456821.38 ft
East: 2457808.73 ft
Station: 401+41.23
Offset: 6.70' Lt

Elevation (ft)	SOIL AND ROCK DESCRIPTION	Depth (ft)	Sample No.	SPT Values (blw/6 in)	Qu (tsf)	Moisture Content (%)
	12-inch thick, dark brown SILTY LOAM, trace gravel --FILL-- --roadway--		1	13 6 5	NP	20
452.4	Medium stiff to stiff, brown and gray SILTY CLAY to SILTY CLAY LOAM, trace organic matter; damp to moist --FILL-- --RDR 2--	5	2	3 1 1	0.66 B	26
			3	1 1 2	1.07 B	21
448.4	Medium stiff to stiff, brown and gray CLAY to SILTY CLAY, trace organic matter; damp to moist --RDR 2--	10	4	2 2 3	1.39 E	28
			5	2 3 3	1.31 E	23
		15	6	2 3 2	1.31 E	28
			7	2 2 2	0.66 E	26
438.4	Soft, gray CLAY, little to some organic matter; moist --interbedded 0.5-inch thick peat lenses--	20	8	2 1 2	0.49 E	55

Elevation (ft)	SOIL AND ROCK DESCRIPTION	Depth (ft)	Sample Type / recovery	Sample No.	SPT Values (blw/6 in)	Qu (tsf)	Moisture Content (%)
435.9	--RDR 2-- --L_L(%)=42, P_I(%)=28-- --%Gravel=0.2-- --%Sand=7.8-- --%Silt=71.9-- --%Clay=20.2-- --A-7-6 (15)--						
	Soft to medium stiff, gray CLAY, trace organic matter --RDR 2--	25		9	3 1 2	0.82 B	31
				10	1 2 2	0.49 B	28
430.9	Soft, gray GRAVELLY CLAY LOAM to LOAM, trace gravel --RDR 2--			11	6 9 9	0.25 P	19
428.4	Very dense, gray and brown SANDY GRAVEL; moist to saturated --RDR 2 to 3--	30		12	13 34 43	NP	10
	--hard drilling to 33.5 feet-- --possible cobbles--						
422.9	Very dense, gray weathered SHALE --RDR 2 to 3--	35		13	18 50/4"	NP	14
	--MSPT 1--			14	100/8"	NP	14
	--MSPT 2--	40		15	100/6"	NP	14

GENERAL NOTES

Begin Drilling: 06-04-2019 Complete Drilling: 06-04-2019
Drilling Contractor: Wang Testing Services Drill Rig: 17D50A [87%]
Driller: K&N&K Logger: E. Yim Checked by: C. Marin
Drilling Method: 3.25" HSA; boring backfilled upon completion

WATER LEVEL DATA

While Drilling: 25.50 ft
At Completion of Drilling: DRY
Time After Drilling: NA
Depth to Water: NA

The stratification lines represent the approximate boundary between soil types; the actual transition may be gradual.

WANGENGINC 707291.GPJ WANGENG.GDT 3/12/20

BORING LOG BSB-03

WEI Job No.: 707-21-01

Wang Engineering
wangeng@wangeng.com
1145 N. Main Street
Lombard/IL/60148
Telephone: 6309539928
Fax: 6309539938

Client: Michael Baker International
Project: Cedar Street Extension at IL Route 29
Location: Tazewell County, IL

Datum: NAVD 88
Elevation: 456.38 ft
North: 1456821.38 ft
East: 2457808.73 ft
Station: 401+41.23
Offset: 6.70' Lt

Elevation (ft)	SOIL AND ROCK DESCRIPTION	Depth (ft)	Sample Type / recovery	Sample No.	SPT Values (blw/6 in)	Qu (tsf)	Moisture Content (%)
	--MSPT 3--			16	100/6.5"	NP	14
	--MSPT 4--	45		17	100/5"	NP	14
	--MSPT 5--			18	100/6"	NP	11
407.4	--MSPT 6-- Boring terminated at 49.00 ft	50		19	100/5.5"	NP	13
		55					
		60					

GENERAL NOTES

Begin Drilling: 06-04-2019 Complete Drilling: 06-04-2019
Drilling Contractor: Wang Testing Services Drill Rig: 17D50A [87%]
Driller: K&N&K Logger: E. Yim Checked by: C. Marin
Drilling Method: 3.25" HSA; boring backfilled upon completion

WATER LEVEL DATA

While Drilling: 25.50 ft
At Completion of Drilling: DRY
Time After Drilling: NA
Depth to Water: NA

The stratification lines represent the approximate boundary between soil types; the actual transition may be gradual.

WANGENGINC 707291.GPJ WANGENG.GDT 3/12/20

BORING LOG BSB-04

WEI Job No.: 707-21-01

Wang Engineering
wangeng@wangeng.com
1145 N. Main Street
Lombard/IL/60148
Telephone: 6309539928
Fax: 6309539938

Client: Michael Baker International
Project: Cedar Street Extension at IL Route 29
Location: Tazewell County, IL

Datum: NAVD 88
Elevation: 456.20 ft
North: 1456807.18 ft
East: 2457815.26 ft
Station: 75+97.69
Offset: 0.13' Lt

Elevation (ft)	SOIL AND ROCK DESCRIPTION	Depth (ft)	Sample Type / recovery	Sample No.	SPT Values (blw/6 in)	Qu (tsf)	Moisture Content (%)
	Loose, brown, damp SILTY LOAM to SILTY CLAY, trace to little gravel --FILL-- --RDR 2--			1	4 2 2	1.00 P	18
454.4	Medium stiff to stiff, brown, damp to moist SILTY CLAY to SILTY CLAY LOAM, trace gravel --FILL--						
452.1	Loose, brown, damp GRAVEL --FILL--	5		2	2 2 4	0.90 B	18
450.7	Very soft, black, brown and gray SILTY CLAY; wet --FILL--			3	1 1 7 8	0.16 B	19
449.4	Very loose to medium dense, black and gray, saturated GRAVELLY SAND --FILL-- --RDR 3 to 5-- --possible cobbles--	10		4	2 1 1	NP	16
	--rig chatter-- --possible cobbles--			5	6 4 2	NP	20
443.2	Very dense, saturated SANDY LOAM, trace to little gravel --RDR 4 to 5-- --FILL--	15		6	1 31 50/1"	NP	27
441.6	--rig chatter, possible cobbles or concrete-- --AUGER REFUSAL, likely reinforced concrete-- Boring terminated at 14.60 ft	20					

GENERAL NOTES

Begin Drilling: 06-04-2019 Complete Drilling: 06-04-2019
Drilling Contractor: Wang Testing Services Drill Rig: D50 ATV [88%]
Driller: K&N&K Logger: E. Yim Checked by: C. Marin
Drilling Method: 3.25" HSA; boring backfilled upon completion

WATER LEVEL DATA

While Drilling: 5.70 ft
At Completion of Drilling: DRY
Time After Drilling: NA
Depth to Water: NA

The stratification lines represent the approximate boundary between soil types; the actual transition may be gradual.

WANGENGINC 707291.GPJ WANGENG.GDT 3/12/20

MODEL: Default
FILE NAME: pw:\\mb-is-pw-03.bakerhq.com\mb-is-pw-03\Documents\Chicago_IL\01_Projects\179740 IDOT CedarSTEx1 Phl15.0 CADD\CADD_Sheets\0900182-68C55-184-Bor3.dgn

Michael Baker INTERNATIONAL
200 W Adams Street
Suite 1800
Chicago, IL 60606
P+1 312.707.8772
FAX: 312.707.8804

USER NAME = DLamb	DESIGNED -	REVISED -
	CHECKED -	REVISED -
PLOT SCALE = 0:20000 ':" / in.	DRAWN -	REVISED -
PLOT DATE = 6/6/2023	CHECKED -	REVISED -

STATE OF ILLINOIS
DEPARTMENT OF TRANSPORTATION

BORING LOGS 3
STRUCTURE NO. 090–0182

SHEET S-184 OF S-194 SHEETS

F.A.P. RTE.	SECTION	COUNTY	TOTAL SHEETS	SHEET NO.
VAR.	13 (HVB, HB-3) BR-1:R	TAZEWELL	1173	710
		CONTRACT NO. 68C55		
		ILLINOIS FED. AID PROJECT		

BORING LOG BSB-05

WEI Job No.: 707-21-01

Wang Engineering
wangeng@wangeng.com
1145 N. Main Street
Lombard/IL/60148
Telephone: 6309539928
Fax: 6309539938

Client: Michael Baker International
Project: Cedar Street Extension at IL Route 29
Location: Tazewell County, IL

Datum: NAVD 88
Elevation: 455.99 ft
North: 1456763.75 ft
East: 2457753.61 ft
Station: 302+61.75
Offset: 2.34' Lt

Profile	Elevation (ft)	SOIL AND ROCK DESCRIPTION	Depth (ft)	Sample Type / recovery	Sample No.	SPT Values (blw/6 in)	Qu (tsf)	Moisture Content (%)
		Soft, brown, black and gray SILTY CLAY to SILTY CLAY LOAM, trace to little gravel; damp to wet --FILL-- --RDR 2--			1	4 3 2	NA	17
			5		2	1 1 1	0.49 B	18
					3	1 1 1	0.25 B	22
	447.3	Medium stiff, black SILTY CLAY, trace gravel; moist to wet --BURIED TOPSOIL-- --RDR 2--	10		4	2 1 2	0.50 F	30
	444.7	Soft to very stiff, gray and brown SILTY CLAY to SILTY CLAY LOAM; moist to wet --RDR 2-- --L_L(%)=45, P_I(%)=22-- --%Gravel=0.1-- --%Sand=3.8-- --%Silt=66.8-- --%Clay=29.3-- --A-7-6 (24)--	15		5	2 2 3	1.89 B	24
					6	2 3 4	2.05 B	25
					7	2 1 2	0.98 B	27
	437.0	Stiff, gray CLAY, little organic matter; wet	20		8	2 2 2	1.50 F	44

Profile	Elevation (ft)	SOIL AND ROCK DESCRIPTION	Depth (ft)	Sample Type / recovery	Sample No.	SPT Values (blw/6 in)	Qu (tsf)	Moisture Content (%)
		--RDR 2--						
	435.5	Soft to medium stiff, gray CLAY to SILTY CLAY, trace organic matter; wet --RDR 1 to 2--			9	2 3 3	0.74 B	25
		--wet silt lenses--	25		10	2 2 1	0.57 B	27
	429.5	Medium dense, gray SANDY GRAVEL, trace silty clay lenses; moist --RDR 2--			11	6 10 9	0.33 B	28
			30		12	4 8 14	NP	12
	424.2	Very dense, bluish gray, weathered SHALE --RDR 2--			14	21 50/2	NP	15
	421.0	Extremely weak, gray, fair to good rock mass quality, SHALE; closely spaced, moderately to highly weathered, horizontal and oblique joints, with no opening, slicken rough walls. --Run 1: 35.0 to 40.0 feet-- --Recovery = 96%-- --RQD = 63%-- --Q_u at 38.0 feet=1927 psi--	35		15	CORE		
			40					

GENERAL NOTES

Begin Drilling: 06-04-2019 Complete Drilling: 06-04-2019
Drilling Contractor: Wang Testing Services Drill Rig: D50 ATV [88%]
Driller: K&N&K Logger: E. Yim Checked by: C. Marin
Drilling Method: 3.25" HSA; boring backfilled upon completion

WATER LEVEL DATA

While Drilling: DRY
At Completion of Drilling: 21.00 ft
Time After Drilling: NA
Depth to Water: NA

The stratification lines represent the approximate boundary between soil types; the actual transition may be gradual.

WANGENGINC 707201.GPJ WANGENG.GDT 3/12/20

BORING LOG BSB-05

WEI Job No.: 707-21-01

Wang Engineering
wangeng@wangeng.com
1145 N. Main Street
Lombard/IL/60148
Telephone: 6309539928
Fax: 6309539938

Client: Michael Baker International
Project: Cedar Street Extension at IL Route 29
Location: Tazewell County, IL

Datum: NAVD 88
Elevation: 455.99 ft
North: 1456763.75 ft
East: 2457753.61 ft
Station: 302+61.75
Offset: 2.34' Lt

Profile	Elevation (ft)	SOIL AND ROCK DESCRIPTION	Depth (ft)	Sample Type / recovery	Sample No.	SPT Values (blw/6 in)	Qu (tsf)	Moisture Content (%)
		--Run 2: 40.0 to 45.0 feet-- --Recovery = 85%-- --RQD = 82%--			17	CORE		
		--Q_u at 44.0 feet=475 psi--	45					
		--Run 3: 45.0 to 50.0 feet-- --Recovery = 100%-- --RQD = 77%--			18	CORE		
		--Q_u at 48.0 feet= 538 psi--						
	406.0	Boring terminated at 50.00 ft	50					
			55					
			60					

GENERAL NOTES

Begin Drilling: 06-04-2019 Complete Drilling: 06-04-2019
Drilling Contractor: Wang Testing Services Drill Rig: D50 ATV [88%]
Driller: K&N&K Logger: E. Yim Checked by: C. Marin
Drilling Method: 3.25" HSA; boring backfilled upon completion

WATER LEVEL DATA

While Drilling: DRY
At Completion of Drilling: 21.00 ft
Time After Drilling: NA
Depth to Water: NA

The stratification lines represent the approximate boundary between soil types; the actual transition may be gradual.

WANGENGINC 707201.GPJ WANGENG.GDT 3/12/20

BORING LOG BSB-06

WEI Job No.: 707-21-01

Wang Engineering
wangeng@wangeng.com
1145 N. Main Street
Lombard/IL/60148
Telephone: 6309539928
Fax: 6309539938

Client: Michael Baker International
Project: Cedar Street Extension at IL Route 29
Location: Tazewell County, IL

Datum: NAVD 88
Elevation: 461.62 ft
North: 1456648.25 ft
East: 2457979.81 ft
Station: 403+84.58
Offset: 1.08' Lt

Profile	Elevation (ft)	SOIL AND ROCK DESCRIPTION	Depth (ft)	Sample Type / recovery	Sample No.	SPT Values (blw/6 in)	Qu (tsf)	Moisture Content (%)
		Medium dense, brown SANDY GRAVEL; moist --FILL-- --RDR 2--			1	9 10 11	NP	10
	458.6	Medium stiff, brown, gravelly LOAM; moist --FILL-- --RDR 2--	5		2	3 4 4	0.75 P	15
	456.1	Loose, reddish SANDY GRAVEL, trace slag; wet --FILL-- --RDR 1--			3	2 2 2	NP	20
	453.6	Soft, brown and black CLAY LOAM --FILL-- --RDR 1--	10		4	1 1 2	0.41 B	24
	451.1	Medium stiff to stiff, dark gray to gray CLAY to SILTY CLAY, trace organic matter --RDR 1--			5	2 3 4	1.07 B	36
			15		6	2 2 3	0.98 B	27
		--L_L(%)=43, P_I(%)=17-- --%Gravel=0.2-- --%Sand=4.4-- --%Silt=69.3-- --%Clay=26.1-- --A-7-6 (26)--			7	2 2 2	0.66 B	29
			20		8	2 2 3	1.48 B	29

Profile	Elevation (ft)	SOIL AND ROCK DESCRIPTION	Depth (ft)	Sample Type / recovery	Sample No.	SPT Values (blw/6 in)	Qu (tsf)	Moisture Content (%)
	441.1	Soft, gray SILTY CLAY, trace to little organic matter --RDR 1 to 2--			9	2 1 2	0.41 B	37
			25		10	2 2 2	0.49 B	46
	436.1	Stiff, gray CLAY to SILTY CLAY, some gravel, trace organic matter; wet --RDR 2--			11	6 8 7	1.00 P	31
	433.6	Medium dense, gray SANDY LOAM; wet --RDR 2--			12	3 4 10	NP	25
	432.6	Medium dense, brown SANDY GRAVEL; saturated --RDR 2 to 4-- --frequent rig chatter-- --possible cobbles--	30					
			35		13	11 8 7	NP	8
	426.9	Very dense, greenish gray SHALE --RDR 4-- --MSPT 1--			14	00/15	NP	13
		--MSPT 2--	40		15	00/8.5	NP	14

GENERAL NOTES

Begin Drilling: 06-03-2019 Complete Drilling: 06-04-2019
Drilling Contractor: Wang Testing Services Drill Rig: 18D25A [85%]
Driller: K&N&K Logger: F. Bozga Checked by: C. Marin
Drilling Method: 2.25" HSA to 10 ft, mud rotary thereafter, boring backfilled upon completion

WATER LEVEL DATA

While Drilling: 5.50 ft
At Completion of Drilling: 4 ft mud
Time After Drilling: 24 hours
Depth to Water: 5.5ft mud ft

The stratification lines represent the approximate boundary between soil types; the actual transition may be gradual.

WANGENGINC 707201.GPJ WANGENG.GDT 3/12/20

Wang Engineering
wangeng@wangeng.com
1145 N. Main Street
Lombard/IL/60148
Telephone: 6309539928
Fax: 6309539938

BORING LOG BSB-06

WEI Job No.: 707-21-01

Client: Michael Baker International
Project: Cedar Street Extension at IL Route 29
Location: Tazewell County, IL

Datum: NAVD 88
Elevation: 461.62 ft
North: 1456648.25 ft
East: 2457979.81 ft
Station: 403+84.58
Offset: 1.08' Lt

Profile	Elevation (ft)	SOIL AND ROCK DESCRIPTION	Depth (ft)	Sample Type / recovery	Sample No.	SPT Values (blw/6 in)	Qu (tsf)	Moisture Content (%)
		--MSPT 3--			16	100/6.5	NP	15
		--MSPT 4--			17	100/3.5	NP	4
			45					
		--MSPT 5--			18	100/2.5	NP	15
	412.9	--MSPT 6--			19	100/3	NP	15
		Boring terminated at 48.75 ft						
			50					
			55					
			60					

GENERAL NOTES

Begin Drilling: 06-03-2019 Complete Drilling: 06-04-2019
Drilling Contractor: Wang Testing Services Drill Rig: 18D25A [85%]
Driller: K&N&K Logger: F. Bozga Checked by: C. Marin
Drilling Method: 2.25" HSA to 10 ft, mud rotary thereafter, boring backfilled upon completion

WATER LEVEL DATA

While Drilling: 5.50 ft
At Completion of Drilling: 4 ft mud
Time After Drilling: 24 hours
Depth to Water: 5.5ft mud ft

The stratification lines represent the approximate boundary between soil types; the actual transition may be gradual.

WANGENGINC 707210.GPJ WANGENG.GDT 3/12/20

Wang Engineering
wangeng@wangeng.com
1145 N. Main Street
Lombard/IL/60148
Telephone: 6309539928
Fax: 6309539938

BORING LOG BSB-07

WEI Job No.: 707-21-01

Client: Michael Baker International
Project: Cedar Street Extension at IL Route 29
Location: Tazewell County, IL

Datum: NAVD 88
Elevation: 462.10 ft
North: 1456601.35 ft
East: 2457953.20 ft
Station: 78+65.24
Offset: 5.40' Rt

Profile	Elevation (ft)	SOIL AND ROCK DESCRIPTION	Depth (ft)	Sample Type / recovery	Sample No.	SPT Values (blw/6 in)	Qu (tsf)	Moisture Content (%)
		Loose, dark brown and black SANDY GRAVEL, brick and slag fragments						
		--FILL--			1	3 2 3	NP	13
		--RDR 1--						
	459.1	Loose, brown, medium SAND; moist						
		--FILL--			2	4 4 2	1.25 P	14
		--RDR 2--						
	457.4	Soft to stiff, brown, dark brown and gray SILTY CLAY LOAM, trace gravel	5					
		--FILL--			3	1 2 2	0.50 P	25
		--RDR 1--						
			10		4	1 2 1	0.33 B	23
	451.6	Medium stiff to stiff, dark gray to gray CLAY to SILTY CLAY; moist						
		--RDR 1 to 2--			5	2 2 3	0.90 B	30
		--wet silt lense--						
			15		6	1 2 4	0.98 B	30
					7	2 2 3	1.89 B	25
			20		8	2 2 3	1.89 B	28

Profile	Elevation (ft)	SOIL AND ROCK DESCRIPTION	Depth (ft)	Sample Type / recovery	Sample No.	SPT Values (blw/6 in)	Qu (tsf)	Moisture Content (%)
		--wet silt lenses--			9	2 2 2	1.07 B	26
	439.1	Medium stiff to stiff, gray SILTY CLAY, organic matter and wood and plant debris						
		--RDR 2--	25		10	2 3 3	0.66 B	30
					11	4 6 7	1.15 B	58
	434.1	Stiff, gray SILTY CLAY, trace gravel						
		--RDR 2--	30		12	5 7 10	1.97 B	21
	430.4	Very dense, brown GRAVELLY SANDY LOAM; wet						
		--RDR 3 to 4--						
		--cave in at 32 feet--						
		--%Gravel=38.6--						
		--%Sand=39.8--						
		--%Silt=18.4--						
		--%Clay=3.2--	35		13	23 29 32	NP	12
		--A-1-b (0)--						
		--possible cobbles and boulders--						
	425.1	--hard drilling, from 37 feet--						
		--WEATHERED SHALE BEDROCK--			14	50/4"	NP	18
	423.6	Weak, dark greenish gray, good rock mass quality, SHALE; closely spaced, completely	40					

GENERAL NOTES

Begin Drilling: 05-30-2019 Complete Drilling: 06-04-2019
Drilling Contractor: Wang Testing Services Drill Rig: 17B57T [91%]
Driller: N&A&B Logger: F. Bozga Checked by: C. Marin
Drilling Method: 2.25" HSA to 10 ft, mud rotary thereafter, boring backfilled upon completion

WATER LEVEL DATA

While Drilling: 32.00 ft
At Completion of Drilling: 3 ft mud
Time After Drilling: 24 hours
Depth to Water: 14.50 ft

The stratification lines represent the approximate boundary between soil types; the actual transition may be gradual.

WANGENGINC 707210.GPJ WANGENG.GDT 3/12/20

Wang Engineering
wangeng@wangeng.com
1145 N. Main Street
Lombard/IL/60148
Telephone: 6309539928
Fax: 6309539938

BORING LOG BSB-07

WEI Job No.: 707-21-01

Client: Michael Baker International
Project: Cedar Street Extension at IL Route 29
Location: Tazewell County, IL

Datum: NAVD 88
Elevation: 462.10 ft
North: 1456601.35 ft
East: 2457953.20 ft
Station: 78+65.24
Offset: 5.40' Rt

Profile	Elevation (ft)	SOIL AND ROCK DESCRIPTION	Depth (ft)	Sample Type / recovery	Sample No.	SPT Values (blw/6 in)	Qu (tsf)	Moisture Content (%)
		weathered, horizontal, vertical and oblique joints, with none to less than 0.05-inch opening, slicken to slightly rough walls.			15			
		--Run 1: 38.5 to 43.5 feet--						
		--Recovery = 100%--						
		--RQD = 88%--						
		--Run 2: 43.5 to 48.5 feet--						
		--Recovery = 98%--						
		--RQD = 83%--						
		--Q_u at 44.5 feet=1331 psi--	45					
					16			
		--Q_u at 46.5 feet=628 psi--						
		--Run 3: 48.5 to 43.5 feet--						
		--Recovery = 100%--						
		--RQD = 83%--						
		--Q_u at 50.0 feet=2016 psi--	50					
					17			
		--Q_u at 51.5 feet=906 psi--						
	408.6	Boring terminated at 53.50 ft						
			55					
			60					

GENERAL NOTES

Begin Drilling: 05-30-2019 Complete Drilling: 06-04-2019
Drilling Contractor: Wang Testing Services Drill Rig: 17B57T [91%]
Driller: N&A&B Logger: F. Bozga Checked by: C. Marin
Drilling Method: 2.25" HSA to 10 ft, mud rotary thereafter, boring backfilled upon completion

WATER LEVEL DATA

While Drilling: 32.00 ft
At Completion of Drilling: 3 ft mud
Time After Drilling: 24 hours
Depth to Water: 14.50 ft

The stratification lines represent the approximate boundary between soil types; the actual transition may be gradual.

WANGENGINC 707210.GPJ WANGENG.GDT 3/12/20

BORING LOG BSB-08

WEI Job No.: 707-21-01

Wang Engineering
wangeng@wangeng.com
1145 N. Main Street
Lombard/IL/60148
Telephone: 6309539928
Fax: 6309539938

Client: Michael Baker International
Project: Cedar Street Extension at IL Route 29
Location: Tazewell County, IL

Datum: NAVD 88
Elevation: 461.91 ft
North: 1456586.70 ft
East: 2457922.92 ft
Station: 305+06.31
Offset: 16.79' Lt

Profile	Elevation (ft)	SOIL AND ROCK DESCRIPTION	Depth (ft)	Sample Type / recovery	Sample No.	SPT Values (blw/6 in)	Qu (tsf)	Moisture Content (%)
		Medium dense, dark brown SANDY GRAVEL; moist --FILL-- --RDR 2--			1	7 6 5	NP	17
	458.9	Brown, coarse SAND; moist --FILL-- --RDR 1--						
	457.9	Soft to medium stiff, dark brown to brown CLAY LOAM --FILL-- --RDR 1--	5		2	2 2 2	0.74 B	22
					3	1 1 1	0.33 B	24
			10		4	1 2 2	0.57 B	26
	451.4	Medium stiff to stiff, dark gray to gray CLAY to SILTY CLAY; moist --RDR 2--			5	1 2 2	0.82 B	34
			15		6	2 4 5	1.07 B	28
					7	2 4 4	1.80 B	24
		--trace plant material--	20		8	2 3 3	1.56 B	26

Profile	Elevation (ft)	SOIL AND ROCK DESCRIPTION	Depth (ft)	Sample Type / recovery	Sample No.	SPT Values (blw/6 in)	Qu (tsf)	Moisture Content (%)
	441.4	Medium stiff, gray SILTY CLAY LOAM, some organic and plant material --RDR 1--			9	1 1 2	0.98 B	35
		--L_L(%)=38, P_L(%)=21-- --%Gravel=0.3-- --%Sand=5.9-- --%Silt=73.8-- --%Clay=20.1-- --A-6 (17)--	25		10	1 2 1	0.90 B	42
	436.4	Stiff, dark brown SILTY CLAY LOAM, trace organic matter and peat lenses --RDR 1--			11	4 4 6	1.00 P	96
	433.9	Medium dense, brown, coarse GRAVELLY SAND --RDR 2--	30		12	4 7 12	NP	17
	428.4	Very dense, greenish gray SHALE --RDR 4 to 5--	35		13	6 14 19	NP	15
		--MSPT 1--			14	100/19"	NP	15
		--MSPT 2--	40		15	100/18"	NP	15

GENERAL NOTES

Begin Drilling: 05-30-2019 Complete Drilling: 05-31-2019
Drilling Contractor: Wang Testing Services Drill Rig: 17D50T [81%]
Driller: N&A&B Logger: F. Bozga Checked by: C. Marin
Drilling Method: 2.25" HSA to 10 ft, mud rotary thereafter, boring backfilled upon completion

WATER LEVEL DATA

While Drilling: 28.00 ft
At Completion of Drilling: 3 ft mud
Time After Drilling: NA
Depth to Water: NA
The stratification lines represent the approximate boundary between soil types; the actual transition may be gradual.

WANGENGINC 707201.GPJ WANGENG.GDT 3/12/20

BORING LOG BSB-08

WEI Job No.: 707-21-01

Wang Engineering
wangeng@wangeng.com
1145 N. Main Street
Lombard/IL/60148
Telephone: 6309539928
Fax: 6309539938

Client: Michael Baker International
Project: Cedar Street Extension at IL Route 29
Location: Tazewell County, IL

Datum: NAVD 88
Elevation: 461.91 ft
North: 1456586.70 ft
East: 2457922.92 ft
Station: 305+06.31
Offset: 16.79' Lt

Profile	Elevation (ft)	SOIL AND ROCK DESCRIPTION	Depth (ft)	Sample Type / recovery	Sample No.	SPT Values (blw/6 in)	Qu (tsf)	Moisture Content (%)
		--MSPT 3--			16	100/7"	NP	14
		--MSPT 4--	45		17	100/4"	NP	18
		--MSPT 5--			18	100/3"	NP	19
	413.2	--MSPT 6-- Boring terminated at 48.75 ft	50		19	100/3"	NP	19
			55					
			60					

Profile	Elevation (ft)	SOIL AND ROCK DESCRIPTION	Depth (ft)	Sample Type / recovery	Sample No.	SPT Values (blw/6 in)	Qu (tsf)	Moisture Content (%)

GENERAL NOTES

Begin Drilling: 05-30-2019 Complete Drilling: 05-31-2019
Drilling Contractor: Wang Testing Services Drill Rig: 17D50T [81%]
Driller: N&A&B Logger: F. Bozga Checked by: C. Marin
Drilling Method: 2.25" HSA to 10 ft, mud rotary thereafter, boring backfilled upon completion

WATER LEVEL DATA

While Drilling: 28.00 ft
At Completion of Drilling: 3 ft mud
Time After Drilling: NA
Depth to Water: NA
The stratification lines represent the approximate boundary between soil types; the actual transition may be gradual.

WANGENGINC 707201.GPJ WANGENG.GDT 3/12/20

BORING LOG BSB-09

WEI Job No.: 707-21-01

Wang Engineering
wangeng@wangeng.com
1145 N. Main Street
Lombard/IL/60148
Telephone: 6309539928
Fax: 6309539938

Client: Michael Baker International
Project: Cedar Street Extension at IL Route 29
Location: Tazewell County, IL

Datum: NAVD 88
Elevation: 462.82 ft
North: 1456499.08 ft
East: 2458129.87 ft
Station: 405+96.07
Offset: 1.78' Rt

Profile	Elevation (ft)	SOIL AND ROCK DESCRIPTION	Depth (ft)	Sample Type / recovery	Sample No.	SPT Values (blw/6 in)	Qu (tsf)	Moisture Content (%)
		Loose, black, gray and reddish SANDY GRAVEL; moist to wet --FILL-- --RDR 2-- --RAILROAD BALLAST--			1	6 3 3	NP	12
			5		2	2 2 2	NP	24
					3	3 3 2	NP	14
	454.8	Very soft, dark gray SILTY CLAY LOAM, trace organic matter; wet --RDR 1--	10		4	2 1 1	0.16 B	31
	452.3	Soft, black PEAT; wet --RDR 1--			5	1 1 2	0.49 B	165
	449.8	Medium stiff, gray SILTY CLAY LOAM, some organic matter and plant debris; wet --RDR 1--	15		6	1 1 1	0.74 B	42
	447.3	Soft, gray SILTY CLAY LOAM, trace organic matter --RDR 1--			7	1 1 1	0.33 B	28
	444.8	Medium dense, brown SANDY LOAM, some gravel; wet --RDR 2--	20		8	7 5 6	NP	8

Profile	Elevation (ft)	SOIL AND ROCK DESCRIPTION	Depth (ft)	Sample Type / recovery	Sample No.	SPT Values (blw/6 in)	Qu (tsf)	Moisture Content (%)
	442.3	Medium dense to dense, brown SANDY GRAVEL, trace cobbles and boulders; saturated --RDR 3 to 4--			9	5 12 12	NP	7
			25		10	5 20 21	NP	9
	437.3	Dense, brown, medium SANDY LOAM, little gravel; saturated --RDR 2--			11	10 16 17	NP	22
	434.8	Medium dense, brown GRAVELLY SAND; saturated --RDR 2-- --%Gravel=29.1-- --%Sand=57.1-- --%Silt=12.2-- --%Clay=1.6-- --A-1-b (0)--	30		12	7 9 10	NP	15
	430.3	--hard drilling, 32.5 feet-- Very dense, greenish gray SHALE --RDR 4--	35		13	20 40 45	NP	17
		--MSPT 1--			14	100/11"	NP	16
		--MSPT 2--	40		15	100/19.5"	NP	16

GENERAL NOTES

Begin Drilling: 05-28-2019 Complete Drilling: 05-28-2019
Drilling Contractor: Wang Testing Services Drill Rig: 17B57T [91%]
Driller: N&A&N Logger: F. Bozga Checked by: C. Marin
Drilling Method: 2.25" HSA to 10 ft, mud rotary thereafter, boring backfilled upon completion

WATER LEVEL DATA

While Drilling: 7.00 ft
At Completion of Drilling: 3 ft mud
Time After Drilling: NA
Depth to Water: NA
The stratification lines represent the approximate boundary between soil types; the actual transition may be gradual.

WANGENGINC 707201.GPJ WANGENG.GDT 3/12/20

MODEL: Default
FILE NAME: pw:\\mbs-us-w.bentley.com:mbs-us-pw-03\Documents\Chicago_IL\01 Projects\179740 IDOT CedarSt\Ext PhII\5.0 CADD\CAD Sheets\090\187-68C55-187-Bor6.dgn

Michael Baker INTERNATIONAL
200 W Adams Street, Suite 1800, Chicago, IL 60606, PH: 312.707.8772, FAX: 312.707.8804

USER NAME = DLamb	DESIGNED -	REVISED -	
	CHECKED -	REVISED -	
PLOT SCALE = 0:2.0000 ':" / in.	DRAWN -	REVISED -	
PLOT DATE = 8/6/2023	CHECKED -	REVISED -	

STATE OF ILLINOIS
DEPARTMENT OF TRANSPORTATION

BORING LOGS 6
STRUCTURE NO. 090-0182

SHEET S-187 OF S-194 SHEETS

F.A.P. RTE.	SECTION	COUNTY	TOTAL SHEETS	SHEET NO.
VAR.	13 (HVB, HB-3) BR-1;R	TAZEWELL	1173	713
		CONTRACT NO. 68C55		
	ILLINOIS	FED. AID PROJECT		

BORING LOG BSB-09

Wang Engineering
wangeng@wangeng.com
1145 N. Main Street
Lombard/IL/60148
Telephone: 6309539928
Fax: 6309539938

WEI Job No.: 707-21-01
Client: Michael Baker International
Project: Cedar Street Extension at IL Route 29
Location: Tazewell County, IL

Datum: NAVD 88
Elevation: 462.82 ft
North: 1456499.08 ft
East: 2458129.87 ft
Station: 405+96.07
Offset: 1.78' Rt

Profile	Elevation (ft)	SOIL AND ROCK DESCRIPTION	Depth (ft)	Sample Type / recovery	Sample No.	SPT Values (blw/6 in)	Qu (tsf)	Moisture Content (%)
		--MSPT 3--			16	100/9.5	NP	16
		--MSPT 4--			17	100/7.5	NP	14
			45					
		--MSPT 5--			18	100/4.25	NP	13
	414.1	--MSPT 6--			19	100/2.5	NP	12
		Boring terminated at 48.75 ft						
			50					
			55					
			60					

GENERAL NOTES

Begin Drilling: 05-28-2019 Complete Drilling: 05-28-2019
Drilling Contractor: Wang Testing Services Drill Rig: 17B57T [91%]
Driller: N&A&N Logger: F. Bozga Checked by: C. Marin
Drilling Method: 2.25" HSA to 10 ft, mud rotary thereafter, boring
backfilled upon completion

WATER LEVEL DATA

While Drilling: 7.00 ft
At Completion of Drilling: 3 ft mud
Time After Drilling: NA
Depth to Water: NA
The stratification lines represent the approximate boundary between soil types; the actual transition may be gradual.

BORING LOG BSB-10

Wang Engineering
wangeng@wangeng.com
1145 N. Main Street
Lombard/IL/60148
Telephone: 6309539928
Fax: 6309539938

WEI Job No.: 707-21-01
Client: Michael Baker International
Project: Cedar Street Extension at IL Route 29
Location: Tazewell County, IL

Datum: NAVD 88
Elevation: 463.14 ft
North: 1456423.06 ft
East: 2458066.41 ft
Station: 80+72.64
Offset: 45.31' Rt

Profile	Elevation (ft)	SOIL AND ROCK DESCRIPTION	Depth (ft)	Sample Type / recovery	Sample No.	SPT Values (blw/6 in)	Qu (tsf)	Moisture Content (%)
		Very loose to loose, black SANDY GRAVEL, trace slag and brick fragments; moist to wet			1	2 2 2	NP	16
		--FILL--						
		--RDR 1--						
			5		2	2 1 1	NP	26
					3	2 1 1	NP	34
	455.1	Very soft, gray CLAY, trace to little organic matter						
		--RDR 1--	10		4	0 0 0	0.16 B	34
	452.6	Medium stiff, dark gray SILTY CLAY LOAM, trace organic matter						
		--RDR 1--			5	1 2 1	0.90 B	27
		--L_L(%)=39, P_I(%)=18--						
		--%Gravel=0.1--						
		--%Sand=7.7--						
		--%Silt=69.2--						
		--%Clay=23.0--						
		--A-6 (20)--	15		6	1 2 2	0.82 B	27
	447.6	Medium dense, brown, GRAVELLY LOAM; wet						
		--RDR 3 to 4--			7	3 8 10	NP	12
		--possible cobbles--						
	444.6	Medium dense, brown GRAVELLY SAND, trace cobbles; wet to saturated						
			20		8	8 12 10	NP	9

Profile	Elevation (ft)	SOIL AND ROCK DESCRIPTION	Depth (ft)	Sample Type / recovery	Sample No.	SPT Values (blw/6 in)	Qu (tsf)	Moisture Content (%)
		--RDR 3 to 4--			9	12 14 14	NP	8
			25		10	13 12 6	NP	11
					11	11 13 13	NP	14
			30		12	10 0 8	NP	16
	430.6	--slow drilling at 32.5 feet--						
	429.6	--WEATHERED SHALE BEDROCK--						
		Very weak, dark greenish gray, poor rock mass quality, SHALE; closely spaced, highly weathered, horizontal joints, with none to < 0.05-inch opening, slightly rough walls.	35		13	CORE		
		--Run 1: 33.5 to 38.5 feet--						
		--Recovery = 66%--						
		--RQD = 43%--						
		--Q_u at 36.5 feet=139 psi--						
		--Run 2: 38.5 to 43.5 feet--						
		--Recovery = 100%--						
		--RQD = 58%--	40			COR		

GENERAL NOTES

Begin Drilling: 05-29-2019 Complete Drilling: 05-30-2019
Drilling Contractor: Wang Testing Services Drill Rig: 17B57T [91%]
Driller: N&A&B Logger: F. Bozga Checked by: C. Marin
Drilling Method: 2.25" HSA to 10 ft, mud rotary thereafter, boring
backfilled upon completion

WATER LEVEL DATA

While Drilling: 5.50 ft
At Completion of Drilling: 3 ft mud
Time After Drilling: 24 hours
Depth to Water: 5.00 ft
The stratification lines represent the approximate boundary between soil types; the actual transition may be gradual.

BORING LOG BSB-10

Wang Engineering
wangeng@wangeng.com
1145 N. Main Street
Lombard/IL/60148
Telephone: 6309539928
Fax: 6309539938

WEI Job No.: 707-21-01
Client: Michael Baker International
Project: Cedar Street Extension at IL Route 29
Location: Tazewell County, IL

Datum: NAVD 88
Elevation: 463.14 ft
North: 1456423.06 ft
East: 2458066.41 ft
Station: 80+72.64
Offset: 45.31' Rt

Profile	Elevation (ft)	SOIL AND ROCK DESCRIPTION	Depth (ft)	Sample Type / recovery	Sample No.	SPT Values (blw/6 in)	Qu (tsf)	Moisture Content (%)
					14	CORE		
		--Run 3: 43.5 to 48.5 feet--						
		--Recovery = 100%--						
		--RQD = 75%--	45					
		--Q_u at 46.0 feet=1003 psi--			15			
	414.6	Boring terminated at 48.50 ft						
			50					
			55					
			60					

GENERAL NOTES

Begin Drilling: 05-29-2019 Complete Drilling: 05-30-2019
Drilling Contractor: Wang Testing Services Drill Rig: 17B57T [91%]
Driller: N&A&B Logger: F. Bozga Checked by: C. Marin
Drilling Method: 2.25" HSA to 10 ft, mud rotary thereafter, boring
backfilled upon completion

WATER LEVEL DATA

While Drilling: 5.50 ft
At Completion of Drilling: 3 ft mud
Time After Drilling: 24 hours
Depth to Water: 5.00 ft
The stratification lines represent the approximate boundary between soil types; the actual transition may be gradual.

WANGENGINC 707291.GPJ WANGENG.GDT 3/12/20

BORING LOG BSB-11

Wang Engineering
wangeng@wangeng.com
1145 N. Main Street
Lombard/IL/60148
Telephone: 6309539928
Fax: 6309539938

WEI Job No.: 707-21-01
Client: Michael Baker International
Project: Cedar Street Extension at IL Route 29
Location: Tazewell County, IL

Datum: NAVD 88
Elevation: 464.00 ft
North: 1456394.98 ft
East: 2458037.60 ft
Station: 307+28.13
Offset: 2.98' Lt

Elevation (ft)	Soil and Rock Description	Depth (ft)	Sample No.	SPT Values (blw/6 in)	Qu (tsf)	Moisture Content (%)
	Loose, black and red SANDY GRAVEL, slag and brick fragments; moist --FILL-- --RDR 1 to 2--		1	3 3 2	NP	20
460.0	Loose, reddish SAND; wet --FILL-- --RDR 1--	5	2	1 2 2	NP	15
458.5	Loose, brown, medium SAND; saturated --FILL-- --RDR 1--		3	2 3 2	NP	20
454.8	Soft, black SILTY CLAY LOAM, trace shells and plant material --RDR 1--	10	4	1 1 1	NR	
			5	1 2 3	0.41 B	31
451.0	Medium dense to dense, brown SANDY GRAVEL, trace to little cobbles and boulders; saturated --RDR 3 to 4--	15	6	3 11 10	NP	11
			7	5 8 9	NP	10
		20	8	7 9 10	NP	13

Elevation (ft)	Soil and Rock Description	Depth (ft)	Sample No.	SPT Values (blw/6 in)	Qu (tsf)	Moisture Content (%)
	--RDR 2--	25	9	9 18 14	NP	10
			10	17 12 15	NP	14
			11	9 10 11	NP	12
	--RDR 2--	30	12	9 8 5	NP	20
437.0	--hard drilling from 32.0 feet-- Very dense, greenish gray SHALE --RDR 4 to 5--	35	13	22 38 49	NP	14
	--MSPT 1--		14	100/11"	NP	15
	--MSPT 2--	40	15	100/10"	NP	15

GENERAL NOTES

Begin Drilling: 05-29-2019 Complete Drilling: 05-29-2019
Drilling Contractor: Wang Testing Services Drill Rig: 17B57T [91%]
Driller: N&A&B Logger: F. Bozga Checked by: C. Marin
Drilling Method: 2.25" HSA to 10 ft, mud rotary thereafter, boring backfilled upon completion

WATER LEVEL DATA

While Drilling: 4.50 ft
At Completion of Drilling: 3 ft mud
Time After Drilling: NA
Depth to Water: NA
The stratification lines represent the approximate boundary between soil types; the actual transition may be gradual.

WANGENGINC 707201.GPJ WANGENG.GDT 3/12/20

BORING LOG BSB-11

Wang Engineering
wangeng@wangeng.com
1145 N. Main Street
Lombard/IL/60148
Telephone: 6309539928
Fax: 6309539938

WEI Job No.: 707-21-01
Client: Michael Baker International
Project: Cedar Street Extension at IL Route 29
Location: Tazewell County, IL

Datum: NAVD 88
Elevation: 464.00 ft
North: 1456394.98 ft
East: 2458037.60 ft
Station: 307+28.13
Offset: 2.98' Lt

Elevation (ft)	Soil and Rock Description	Depth (ft)	Sample No.	SPT Values (blw/6 in)	Qu (tsf)	Moisture Content (%)
	--MSPT 3--		16	100/12.5"	NP	15
	--MSPT 4--	45	17	100/4"	NP	14
	--MSPT 5--		18	100/3"	NP	14
415.3	--MSPT 6-- Boring terminated at 48.75 ft	50	19	100/2.75"	NP	14
		55				
		60				

GENERAL NOTES

Begin Drilling: 05-29-2019 Complete Drilling: 05-29-2019
Drilling Contractor: Wang Testing Services Drill Rig: 17B57T [91%]
Driller: N&A&B Logger: F. Bozga Checked by: C. Marin
Drilling Method: 2.25" HSA to 10 ft, mud rotary thereafter, boring backfilled upon completion

WATER LEVEL DATA

While Drilling: 4.50 ft
At Completion of Drilling: 3 ft mud
Time After Drilling: NA
Depth to Water: NA
The stratification lines represent the approximate boundary between soil types; the actual transition may be gradual.

WANGENGINC 707201.GPJ WANGENG.GDT 3/12/20

BORING LOG BSB-12/ RWB-14

Wang Engineering
wangeng@wangeng.com
1145 N. Main Street
Lombard/IL/60148
Telephone: 6309539928
Fax: 6309539938

WEI Job No.: 707-21-01
Client: Michael Baker International
Project: Cedar Street Extension at IL Route 29
Location: Tazewell County, IL

Datum: NAVD 88
Elevation: 467.01 ft
North: 1456336.89 ft
East: 2458049.73 ft
Station: 307+87.32
Offset: 3.12' Rt

Elevation (ft)	Soil and Rock Description	Depth (ft)	Sample No.	SPT Values (blw/6 in)	Qu (tsf)	Moisture Content (%)
	CONCRETE --drainage ditch--					
466.0	Medium dense, black to brown SAND, little gravel; moist to wet --FILL-- --RDR 2 to 3--		1	5 10 12	NP	11
464.0	Stiff, brown SILTY CLAY LOAM, trace gravel; moist to wet --FILL-- --RDR 2--	5	2	2 2 4	1.15 B	21
460.5	Medium stiff, black and gray SILTY CLAY LOAM, trace gravel and organic matter; moist to wet --RDR 2--		3	3 3 2	0.75 P	28
457.6	Soft, brown CLAY LOAM, trace gravel; wet --<0.5-inch thick gravel lens--	10	4	2 1 3	0.57 B	19
456.5	Soft, brown GRAVELLY CLAY LOAM; wet --RDR 2-- --L_L(%)=35, P_I(%)=13-- --%Gravel=17.1-- --%Sand=34.2-- --%Silt=31.6-- --%Clay=17.2-- --A-6 (7)--		5	2 2 2	0.33 B	27
		15	6	1 1 1	0.25 B	21
451.5	Medium dense to dense, brown GRAVELLY SAND to SANDY LOAM; saturated --RDR 2 to 3--		7	7 10 11	NP	10
		20	8	14 11 11	NP	9

Elevation (ft)	Soil and Rock Description	Depth (ft)	Sample No.	SPT Values (blw/6 in)	Qu (tsf)	Moisture Content (%)
	--silty clay lenses-- --saturated silt lenses--		9	9 11 15	1.00 P	19
		25	10	9 9 11	NP	18
			11	10 17 17	NP	9
		30	12	8 10 13	NP	7
435.7	Dense to very dense, bluish gray weathered to fresh SHALE	35	13	18 17 27	NP	16
	--MSPT 1--		14	100/12.5"	NP	14
	--MSPT 2--	40	15	100/9"	NP	15
	--MSPT 3--		16	100/8"	NP	15

GENERAL NOTES

Begin Drilling: 05-28-2019 Complete Drilling: 05-28-2019
Drilling Contractor: Wang Testing Services Drill Rig: 17D50A [87%]
Driller: K&N&K Logger: E. Yim Checked by: C. Marin
Drilling Method: 3.25" HSA to 25 ft, mud rotary thereafter, boring backfilled upon completion

WATER LEVEL DATA

While Drilling: 15.50 ft
At Completion of Drilling: 8 ft mud
Time After Drilling: NA
Depth to Water: NA
The stratification lines represent the approximate boundary between soil types; the actual transition may be gradual.

WANGENGINC 707201.GPJ WANGENG.GDT 3/12/20

MODEL: Default
FILE NAME: pw:\\mo-us-pw.bentley.com:mb-us-pw-03\Documents\Chicago IL\01 Projects\179740 IDOT Cedar\SHEA PhII\5.0 CADD\CAD Sheets\090182-68C55-189-Bor8.dgn

Michael Baker INTERNATIONAL
200 W Adams Street
Suite 1800
Chicago, IL 60606
PH: 312.707.8870
FAX: 312.707.8804

USER NAME = DLamb	DESIGNED -	REVISED -
	CHECKED -	REVISED -
PLOT SCALE = 0:2.0000 ':" / in.	DRAWN -	REVISED -
PLOT DATE = 6/6/2023	CHECKED -	REVISED -

STATE OF ILLINOIS
DEPARTMENT OF TRANSPORTATION

BORING LOGS 8
STRUCTURE NO. 090–0182

SHEET S-189 OF S-194 SHEETS

F.A.P. RTE.	SECTION	COUNTY	TOTAL SHEETS	SHEET NO.
VAR.	13 (HVB, HB-3) 8R-1:R	TAZEWELL	1173	715
		CONTRACT NO. 68C55		
	ILLINOIS	FED. AID PROJECT		

BORING LOG BSB-12/ RWB-14

Wang Engineering
wangeng@wangeng.com
1145 N. Main Street
Lombard/IL/60148
Telephone: 6309539928
Fax: 6309539938

WEI Job No.: 707-21-01

Client: Michael Baker International
Project: Cedar Street Extension at IL Route 29
Location: Tazewell County, IL

Datum: NAVD 88
Elevation: 467.01 ft
North: 1456336.89 ft
East: 2458049.73 ft
Station: 307+87.32
Offset: 3.12' Rt

Profile	Elevation (ft)	SOIL AND ROCK DESCRIPTION	Depth (ft)	Sample Type / recovery	Sample No.	SPT Values (blw/6 in)	Qu (tsf)	Moisture Content (%)
		--MSPT 4--			17	100/8.5"	NP	14
		--MSPT 5--			18	100/4"	NP	15
	420.8	--MSPT 6--	45		19	100/3"	NP	13
		Boring terminated at 46.25 ft	50					
			55					
			60					

GENERAL NOTES

Begin Drilling: 05-28-2019 Complete Drilling: 05-28-2019
Drilling Contractor: Wang Testing Services Drill Rig: 17D50A [87%]
Driller: K&N&K Logger: E. Yim Checked by: C. Marin
Drilling Method: 3.25" HSA to 25 ft, mud rotary thereafter, boring backfilled upon completion

WATER LEVEL DATA

While Drilling: 15.50 ft
At Completion of Drilling: 8 ft mud
Time After Drilling: NA
Depth to Water: NA

The stratification lines represent the approximate boundary between soil types; the actual transition may be gradual.

WANGENGINC 707291.GPJ WANGENG.GDT 3/12/20

BORING LOG BSB-13

Wang Engineering
wangeng@wangeng.com
1145 N. Main Street
Lombard/IL/60148
Telephone: 6309539928
Fax: 6309539938

WEI Job No.: 707-21-01

Client: Michael Baker International
Project: Cedar Street Extension at IL Route 29
Location: Tazewell County, IL

Datum: NAVD 88
Elevation: 492.89 ft
North: 1456404.92 ft
East: 2458205.83 ft
Station: 81+81.49
Offset: 43.69' Lt

Profile	Elevation (ft)	SOIL AND ROCK DESCRIPTION	Depth (ft)	Sample Type / recovery	Sample No.	SPT Values (blw/6 in)	Qu (tsf)	Moisture Content (%)
	492.64	4-inch thick, black SILTY CLAY LOAM						
		--TOPSOIL--						
		Medium dense to dense, brown, medium SAND to SANDY LOAM, trace gravel; moist			1	5 8 12	NP	6
		--FILL--						
		--RDR 2--						
			5		2	6 13 18	NP	8
					3	5 8 11	NP	13
	484.9	Medium dense, brown GRAVELLY SAND; moist						
		--FILL--			4	10 14 13	NP	9
		--RDR 2--	10					
	481.4	Stiff to hard, gray SILTY CLAY LOAM to CLAY LOAM, trace to little gravel			5	10 8 10	> 4.50 P	11
		--FILL--						
		--RDR 2--			6	5 9 10	3.61 B	12
			15					
					7	6 8 12	3.20 B	15
			20		8	7 8 8	1.89 B	15

Profile	Elevation (ft)	SOIL AND ROCK DESCRIPTION	Depth (ft)	Sample Type / recovery	Sample No.	SPT Values (blw/6 in)	Qu (tsf)	Moisture Content (%)
					9	7 6 11	2.05 B	16
			25		10	6 7 16	3.61 B	12
	467.4	Very dense, black GRAVELLY SAND; damp to moist						
		--FILL--			11	11 35 46	NP	22
		--RDR 2--						
		--possible cobbles--						
	464.9	Medium dense, brown, medium SAND; wet						
		--FILL--			12	12 12 8	NP	20
		--RDR 2--	30					
	461.1	Stiff, dark gray SILTY CLAY LOAM, trace organic matter						
		--RDR 2--			13	3 4 5	1.56 B	23
			35					
	456.1	Soft, brown GRAVELLY CLAY LOAM; wet						
		--RDR 3--						
		--possible cobbles--	40		14	3 3 5	0.33 B	16

GENERAL NOTES

Begin Drilling: 05-21-2019 Complete Drilling: 05-22-2019
Drilling Contractor: Wang Testing Services Drill Rig: 18D25A [85%]
Driller: N&K&N Logger: F. Bozga Checked by: C. Marin
Drilling Method: 2.25" HSA to 15 ft, mud rotary thereafter, boring backfilled upon completion

WATER LEVEL DATA

While Drilling: 28.00 ft
At Completion of Drilling: 5 ft mud
Time After Drilling: 24 hours
Depth to Water: 28.00 ft

The stratification lines represent the approximate boundary between soil types; the actual transition may be gradual.

WANGENGINC 707291.GPJ WANGENG.GDT 3/12/20

BORING LOG BSB-13

Wang Engineering
wangeng@wangeng.com
1145 N. Main Street
Lombard/IL/60148
Telephone: 6309539928
Fax: 6309539938

WEI Job No.: 707-21-01

Client: Michael Baker International
Project: Cedar Street Extension at IL Route 29
Location: Tazewell County, IL

Datum: NAVD 88
Elevation: 492.89 ft
North: 1456404.92 ft
East: 2458205.83 ft
Station: 81+81.49
Offset: 43.69' Lt

Profile	Elevation (ft)	SOIL AND ROCK DESCRIPTION	Depth (ft)	Sample Type / recovery	Sample No.	SPT Values (blw/6 in)	Qu (tsf)	Moisture Content (%)
	451.1	Medium dense to very dense, brown GRAVELLY SANDY LOAM; wet to saturated						
		--RDR 2 to 4--			15	7 8 11	NP	13
			45					
		--possible cobbles--						
		--%Gravel=39.0--			16	9 14 15	NP	9
		--%Sand=46.9--						
		--%Silt=13.4--						
		--%Clay=0.7--	50					
		--A-1-b (0)--						
		--possible cobbles--						
					17	30 50/5"	NP	10
			55					
	436.1	Soft, gray SILTY CLAY						
		--highly weathered shale--						
		--RDR 1--			18	5 3 5	0.33 B	29
			60					

Profile	Elevation (ft)	SOIL AND ROCK DESCRIPTION	Depth (ft)	Sample Type / recovery	Sample No.	SPT Values (blw/6 in)	Qu (tsf)	Moisture Content (%)
	431.4	--hard drilling, 61.5 feet--						
		Very dense, greenish gray SHALE						
		--RDR 4--			19	50/5"	NP	11
		--MSPT 1--			20	100/10"		16
			65					
		--MSPT 2--			21	100/8.5"		15
		--MSPT 3--			22	100/6.5"		19
			70					
		--MSPT 4--			23	100/7"		16
		--MSPT 5--			24	100/3.5"		14
			75					
	418.7	--MSPT 6--			25	100/2.5"		20
		Boring terminated at 76.25 ft						
			80					

GENERAL NOTES

Begin Drilling: 05-21-2019 Complete Drilling: 05-22-2019
Drilling Contractor: Wang Testing Services Drill Rig: 18D25A [85%]
Driller: N&K&N Logger: F. Bozga Checked by: C. Marin
Drilling Method: 2.25" HSA to 15 ft, mud rotary thereafter, boring backfilled upon completion

WATER LEVEL DATA

While Drilling: 28.00 ft
At Completion of Drilling: 5 ft mud
Time After Drilling: 24 hours
Depth to Water: 28.00 ft

The stratification lines represent the approximate boundary between soil types; the actual transition may be gradual.

WANGENGINC 707291.GPJ WANGENG.GDT 3/12/20

MODEL: Default
FILE NAME: pw:\\mb-us-pw.bentley.com:mb-us-pw-03\Documents\Chicago\IL\01 Projects\179740 IDOT CedarStExt Phll\5.0 CADD\CAD_Sheets\09900182-48C55-190-Bor9.dgn

Michael Baker INTERNATIONAL
200 W Adams Street
Suite 1800
Chicago, IL 60606
PH: 312.707.8770
FAX: 312.707.8804

USER NAME = DLamb	DESIGNED -	REVISED -	
	CHECKED -	REVISED -	
PLOT SCALE = 0:20000 ':" / in.	DRAWN -	REVISED -	
PLOT DATE = 6/6/2023	CHECKED -	REVISED -	

STATE OF ILLINOIS
DEPARTMENT OF TRANSPORTATION

BORING LOGS 9
STRUCTURE NO. 090–0182

SHEET S-190 OF S-194 SHEETS

F.A.P. RTE.	SECTION	COUNTY	TOTAL SHEETS	SHEET NO.
VAR.	13 (HVB, HB-3) BR-1:R	TAZEWELL	1173	716
		CONTRACT NO. 68C55		
		ILLINOIS	FED. AID PROJECT	

BORING LOG BSB-14

Wang Engineering
wangeng@wangeng.com
1145 N. Main Street
Lombard/IL/60148
Telephone: 6309539928
Fax: 6309539938

WEI Job No.: 707-21-01

Client: Michael Baker International
Project: Cedar Street Extension at IL Route 29
Location: Tazewell County, IL

Datum: NAVD 88
Elevation: 492.29 ft
North: 1456331.51 ft
East: 2458133.21 ft
Station: 81+85.09
Offset: 59.51' Rt

Elevation (ft)	SOIL AND ROCK DESCRIPTION	Depth (ft)	Sample No.	SPT Values (blw/6 in)	Qu (tsf)	Moisture Content (%)
491.9	5-inch thick, brown TOPSOIL --TOPSOIL--					
491.3	Gray SILTY CLAY LOAM to SILTY CLAY, trace gravel --FILL--		1	11 11 20	NP	7
	Medium dense to dense, brown SAND, trace to little gravel; damp to wet --FILL-- --RDR 2--	5	2	5 13 16	NP	7
			3	7 14 15	NP	10
483.5	Stiff to hard, brown and gray SILTY CLAY LOAM to CLAY LOAM trace to little gravel; damp to moist --FILL-- --RDR 2--	10	4	5 14 12	1.31 B	11
			5	3 5 7	3.20 B	13
		15	6	5 5 6	2.21 B	13
	--2-inch thick silt lens--		7	5 7 8	4.10 B	15
	--possible cobbles--	20	8	4 6 8	3.69 B	12
466.8	Stiff, gray LOAM to SILTY CLAY LOAM, trace gravel; damp --FILL-- --RDR 2--		9	4 8 6	4.84 B	11
		25	10	7 8 11	2.38 B	12
			11	12 8 7	1.56 S	16
464.3	Stiff to very stiff, black, brown and gray SILTY CLAY to SILTY CLAY LOAM, trace gravel; damp to moist --RDR 2--	30	12	3 4 4	1.23 B	23
	--sandy clay lenses; wet--	35	13	4 4 6	2.13 B	23
455.5	Medium dense, brown GRAVELLY SAND to SANDY LOAM; saturated --RDR 2--	40	14	6 4 7	NP	10

GENERAL NOTES

Begin Drilling: 06-05-2019 Complete Drilling: 06-05-2019
Drilling Contractor: Wang Testing Services Drill Rig: 17D50A [87%]
Driller: K&K Logger: E. Yim Checked by: C. Marin
Drilling Method: 3.25" HSA; boring backfilled upon completion

WATER LEVEL DATA

While Drilling: 36.25 ft
At Completion of Drilling: 24ft augers flushed
Time After Drilling: NA
Depth to Water: NA

The stratification lines represent the approximate boundary between soil types; the actual transition may be gradual.

BORING LOG BSB-14

Wang Engineering
wangeng@wangeng.com
1145 N. Main Street
Lombard/IL/60148
Telephone: 6309539928
Fax: 6309539938

WEI Job No.: 707-21-01

Client: Michael Baker International
Project: Cedar Street Extension at IL Route 29
Location: Tazewell County, IL

Datum: NAVD 88
Elevation: 492.29 ft
North: 1456331.51 ft
East: 2458133.21 ft
Station: 81+85.09
Offset: 59.51' Rt

Elevation (ft)	SOIL AND ROCK DESCRIPTION	Depth (ft)	Sample No.	SPT Values (blw/6 in)	Qu (tsf)	Moisture Content (%)
438.3	Medium stiff, bluish gray CLAY and silt laminations; wet --WEATHERED BEDROCK-- --RDR 2--	45	15	9 12 14	NP	12
		50	16	7 0 10	NP	12
		55	17	6 8 5	0.50 P	19
433.8	--heaving sand, 58.5 feet-- Very dense, bluish gray, weathered SHALE --RDR 2--	60	18	39 50/4"	NP	14
432.3	Extremely weak, bluish gray, fair to excellent rock mass quality, SHALE; closely spaced, completely weathered, horizontal and oblique joints, with no opening, slicken walls. --Run 1: 60.0 to 65.0 feet-- --Recovery = 100%-- --RQD = 93%--					
	--Run 2: 65.0 to 70.0 feet-- --Recovery = 90%-- --RQD = 75%--	65	19 (CORE)			
	--Q_u at 67.5 feet=459 psi--		20 (CORE)			
	--Run 3: 70.0 to 75.0 feet-- --Recovery = 95%-- --RQD = 53%--	70	21 (CORE)			
417.3	Boring terminated at 75.00 ft	75				
		80				

GENERAL NOTES

Begin Drilling: 06-05-2019 Complete Drilling: 06-05-2019
Drilling Contractor: Wang Testing Services Drill Rig: 17D50A [87%]
Driller: K&K Logger: E. Yim Checked by: C. Marin
Drilling Method: 3.25" HSA; boring backfilled upon completion

WATER LEVEL DATA

While Drilling: 36.25 ft
At Completion of Drilling: 24ft augers flushed
Time After Drilling: NA
Depth to Water: NA

The stratification lines represent the approximate boundary between soil types; the actual transition may be gradual.

BORING LOG BSB-15

Wang Engineering
wangeng@wangeng.com
1145 N. Main Street
Lombard/IL/60148
Telephone: 6309539928
Fax: 6309539938

WEI Job No.: 707-21-01

Client: Michael Baker International
Project: Cedar Street Extension at IL Route 29
Location: Tazewell County, IL

Datum: NAVD 88
Elevation: 494.68 ft
North: 1456172.28 ft
East: 2458084.27 ft
Station: 309+40.61
Offset: 43.32' Lt

Elevation (ft)	SOIL AND ROCK DESCRIPTION	Depth (ft)	Sample No.	SPT Values (blw/6 in)	Qu (tsf)	Moisture Content (%)
494.2	6-inch thick TOPSOIL --TOPSOIL--					
	Stiff to very stiff, brown CLAY LOAM, trace gravel; damp --FILL-- --RDR 2--		1	5 4 4	1.07 B	15
		5	2	5 3 5	2.21 B	14
488.5	Medium dense, brown SAND with clay lens; damp --FILL--		3	3 4 5	1.80 B	10
487.0	Medium stiff to very stiff, gray SILTY CLAY LOAM to CLAY LOAM, trace to little gravel; damp --FILL-- --RDR 2--	10	4	3 4 4	1.07 B	13
			5	5 6 7	2.46 C	13
		15	6	6 5 4	0.98 S	13
479.2	Medium dense, brown SILTY LOAM to LOAM, trace gravel; damp --FILL-- --RDR 2--		7	5 11 8	NP	11
476.7	Stiff to very stiff, brown SILTY CLAY LOAM to SILTY LOAM, trace gravel, sand lens; moist --RDR 2--	20	8	3 3 5	2.38 B	19
			9	3 4 6	1.31 B	21
	--L_L(%)=32, P_L(%)=17-- --%Gravel=1.3-- --%Sand=20.2-- --%Silt=59.5-- --%Clay=18.9-- --A-6 (10)--	25	10	3 6 6	2.38 B	23
469.2	Soft, brown GRAVELLY CLAY LOAM to LOAM; damp to moist --sand and sandy gravel lens; damp-- --RDR 2--		11	3 5 7	0.33 S	18
466.0	Medium dense to dense, brown GRAVELLY SAND to SANDY LOAM; damp to saturated --RDR 2 to 3--	30	12	7 8 5	0.25 P	14
	--rig chatter-- --possible cobbles--	35	13	15 17 14	NP	10
457.9	Very stiff, brown SILTY CLAY LOAM, trace gravel; damp --RDR 2--					
456.0	Medium dense, brown SANDY LOAM, little to some gravel; saturated	40	14	12 10 11	3.75 P	14

GENERAL NOTES

Begin Drilling: 06-13-2019 Complete Drilling: 06-13-2019
Drilling Contractor: Wang Testing Services Drill Rig: 17D50A [87%]
Driller: K&K&G Logger: E. Yim Checked by: C. Marin
Drilling Method: 3.25" HSA to 25 ft, mud rotary thereafter, boring backfilled upon completion

WATER LEVEL DATA

While Drilling: 31.75 ft
At Completion of Drilling: mud in borhole
Time After Drilling: NA
Depth to Water: NA

The stratification lines represent the approximate boundary between soil types; the actual transition may be gradual.

Michael Baker INTERNATIONAL
200 W Adams Street
Suite 1800
Chicago, IL 60606
PH: 312.707.8772
FAX: 312.707.8804

USER NAME = DLamb	DESIGNED -	REVISED -
	CHECKED -	REVISED -
PLOT SCALE = 0:2.0000 ':" / in.	DRAWN -	REVISED -
PLOT DATE = 8/6/2023	CHECKED -	REVISED -

STATE OF ILLINOIS
DEPARTMENT OF TRANSPORTATION

BORING LOGS 10
STRUCTURE NO. 090-0182

SHEET S-191 OF S-194 SHEETS

F.A.P. RTE.	SECTION	COUNTY	TOTAL SHEETS	SHEET NO.
VAR.	13 (HVB, HB-3) BR-1;R	TAZEWELL	1173	717
		CONTRACT NO. 68C55		
		ILLINOIS FED. AID PROJECT		

BORING LOG BSB-15

Wang Engineering
wangeng@wangeng.com
1145 N. Main Street
Lombard/IL/60148
Telephone: 6309539928
Fax: 6309539938

WEI Job No.: 707-21-01
Client: Michael Baker International
Project: Cedar Street Extension at IL Route 29
Location: Tazewell County, IL

Datum: NAVD 88
Elevation: 494.68 ft
North: 1456172.28 ft
East: 2458084.27 ft
Station: 309+40.61
Offset: 43.32' Lt

Elevation (ft)	SOIL AND ROCK DESCRIPTION	Depth (ft)	Sample No.	SPT Values (blw/6 in)	Qu (tsf)	Moisture Content (%)
	Very stiff, brown SILTY CLAY, trace gravel; damp --RDR 2--					
452.9	Dense, brown SAND, trace gravel; saturated --RDR 2--					
		45	15	11 18 25	NP	17
447.9	Stiff, reddish brown SILTY CLAY to SILTY CLAY LOAM, some gravel; damp to moist --RDR 2-- --1-inch gravel lens; wet to saturated--					
		50	16	11 10 18	1.80 S	10
442.9	Very dense, bluish gray LOAM with weathered shale; damp to moist --WEATHERED BEDROCK-- --RDR 2 to 3--					
		55	17	35 39 33	NP	10
439.2	Very dense, light bluish gray, weathered SHALE --RDR 2-- --MSPT 1--					
			18	100/8.5"	NP	13
	--MSPT 2--	60	19	100/9"	NP	14
	--MSPT 3--		20	100/6"	NP	13
	--MSPT 4--	65	21	100/8"	NP	13
	--MSPT 5--		22	100/2"	NP	10
425.9	--MSPT 6--	70	23	100/3"	NP	12
	Boring terminated at 70.00 ft	00				

GENERAL NOTES

Begin Drilling: 06-13-2019 Complete Drilling: 06-13-2019
Drilling Contractor: Wang Testing Services Drill Rig: 17D50A [87%]
Driller: K&K&G Logger: E. Yim Checked by: C. Marin
Drilling Method: 3.25" HSA to 25 ft, mud rotary thereafter, boring backfilled upon completion

WATER LEVEL DATA

While Drilling: 31.75 ft
At Completion of Drilling: mud in borhole
Time After Drilling: NA
Depth to Water: NA
The stratification lines represent the approximate boundary between soil types; the actual transition may be gradual.

BORING LOG RWB-11

Wang Engineering
wangeng@wangeng.com
1145 N. Main Street
Lombard/IL/60148
Telephone: 6309539928
Fax: 6309539938

WEI Job No.: 707-21-01
Client: Michael Baker International
Project: Cedar Street Extension at IL Route 29
Location: Tazewell County, IL

Datum: NAVD 88
Elevation: 466.56 ft
North: 1456439.18 ft
East: 2458132.27 ft
Station: 57+52.31
Offset: 41.76' Rt

Elevation (ft)	SOIL AND ROCK DESCRIPTION	Depth (ft)	Sample No.	SPT Values (blw/6 in)	Qu (tsf)	Moisture Content (%)
466.1	CONCRETE DEBRIS					
465.2	Medium dense, black and brown SILTY LOAM, some gravel; damp --FILL-- --RDR 2--		1	6 14 16	NP	17
	Loose, gray, black and red SANDY GRAVEL to GRAVELLY SAND; damp --FILL-- --RDR 2--	5	2	5 5 4	NP	18
			3	5 5 4	NP	15
		10	4	1 4 2	NP	25
456.1	Medium stiff, black SILTY CLAY, trace gravel and organics; wet --BURIED TOPSOIL-- --RDR 2--		5	1 1 2	0.66 B	45
		15	6	1 1 2	0.66 B	25
451.1	Loose, brown LOAM, little gravel; moist <<R>--RDR 2--		7	5 2 5	NP	13
448.6	Medium dense to dense, brown SANDY GRAVEL; saturated --RDR 2--	20	8	7 5 8	NP	10
443.6	Brown SAND, trace gravel; saturated --RDR 2--		9	3 10 24	NP	16
442.8	Medium dense, brown SANDY GRAVEL; saturated --RDR 2--	25	10	18 13 13	1.00 P	12
442.0	Stiff, brown SILTY CLAY LOAM, little gravel; moist --RDR 2--		11	6 11 10	NP	10
441	Medium dense, brown SAND, little gravel; saturated --RDR 2--	30	12	3 7 9	NP	26
436.1	Stiff (1.64B), brown SILTY CLAY, trace gravel; moist --silt laminations-- --RDR 2--		13	4 4 4	0.33 B	25
435.1	Very soft to soft, gray CLAY, trace gravel; wet --3-inch thick, silty loam; saturated-- --RDR 2-- --silt laminations-- --1-inch sand lenses; saturated--	35	14	2 3 5	NP	23
431.1	Very dense, bluish gray WEATHERED SHALE --RDR 2--		15	50/6"	NP	15
428.6	Extremely weak, light greenish gray, excellent rock mass quality, SHALE; very widely spaced, completely weathered, horizontal	40	CORE			

GENERAL NOTES

Begin Drilling: 05-30-2019 Complete Drilling: 05-30-2019
Drilling Contractor: Wang Testing Services Drill Rig: 17D50A [87%]
Driller: K&N&K Logger: E. Yim Checked by: RKC
Drilling Method: 3.25" HSA; boring backfilled upon completion

WATER LEVEL DATA

While Drilling: 18.00 ft
At Completion of Drilling: 11.50 ft
Time After Drilling: 24 hours
Depth to Water: 10.00 ft
The stratification lines represent the approximate boundary between soil types; the actual transition may be gradual.

BORING LOG RWB-11

Wang Engineering
wangeng@wangeng.com
1145 N. Main Street
Lombard/IL/60148
Telephone: 6309539928
Fax: 6309539938

WEI Job No.: 707-21-01
Client: Michael Baker International
Project: Cedar Street Extension at IL Route 29
Location: Tazewell County, IL

Datum: NAVD 88
Elevation: 466.56 ft
North: 1456439.18 ft
East: 2458132.27 ft
Station: 57+52.31
Offset: 41.76' Rt

Elevation (ft)	SOIL AND ROCK DESCRIPTION	Depth (ft)	Sample No.	SPT Values (blw/6 in)	Qu (tsf)	Moisture Content (%)
	and oblique joints, with no opening, slicken walls, and no infill. --Run 1: 38.0 to 43.0 feet-- --RECOVERY = 100%-- --RQD = 90%--		16	CORE		
423.6	Extremely weak, gray, excellent rock mass quality, SHALE; very widely spaced, completely weathered, horizontal joints, with no opening, slicken walls, and no infill. --Run 2: 43.0 to 48.0 feet-- --RECOVERY = 100%-- --RQD = 82%--	45	17			
418.6	Boring terminated at 48.00 ft	50				
		55				
		60				

GENERAL NOTES

Begin Drilling: 05-30-2019 Complete Drilling: 05-30-2019
Drilling Contractor: Wang Testing Services Drill Rig: 17D50A [87%]
Driller: K&N&K Logger: E. Yim Checked by: RKC
Drilling Method: 3.25" HSA; boring backfilled upon completion

WATER LEVEL DATA

While Drilling: 18.00 ft
At Completion of Drilling: 11.50 ft
Time After Drilling: 24 hours
Depth to Water: 10.00 ft
The stratification lines represent the approximate boundary between soil types; the actual transition may be gradual.

WANGENG.GDT 3/12/20 WANGENG: 707210.GPJ

Wang Engineering
wangeng@wangeng.com
1145 N. Main Street
Lombard/IL/60148
Telephone: 6309539928
Fax: 6309539938

BORING LOG RWB-12

WEI Job No.: 707-21-01

Client: Michael Baker International
Project: Cedar Street Extension at IL Route 29
Location: Tazewell County, IL

Datum: NAVD 88
Elevation: 466.95 ft
North: 1456462.51 ft
East: 2458097.06 ft
Station: 80+64.96
Offset: 4.05' Lt

Elevation (ft)	SOIL AND ROCK DESCRIPTION	Depth (ft)	Sample No.	SPT Values (blw/6 in)	Qu (tsf)	Moisture Content (%)
466.0	Brown SAND					
465.5	Black LOAM, some gravel; damp --FILL-- --RDR 2--		1	12 9 8	NP	17
	Gray SILTY LOAM, little gravel; damp to moist --FILL--					
	Black, red and brown GRAVELLY SAND to SANDY GRAVEL; damp --FILL-- --RDR 2--	5	2	6 10 10	NP	3
461.5	Soft, brown SILTY CLAY, trace gravel; wet --FILL-- --RDR 2--		3	1 2 1	0.49 E	20
	--2 to 3-inch thick sandy gravel lenses--		4	1 1 1	0.33 B	20
457.4	Gray SILTY LOAM, some gravel; wet to saturated --FILL-- --RDR 2--	10				
456.5	Medium stiff to stiff, black SILTY CLAY, trace gravel; moist to wet --BURIED TOPSOIL-- --RDR 2--		5	2 2 2	1.15 B	29
453.1	Very soft to medium stiff, black, blue and gray SILTY CLAY, trace to little gravel; moist to wet --RDR 2--	15	6	3 2 3	0.74 B	28
450.6	Loose, brown, gravelly LOAM to CLAY LOAM; saturated --RDR 2--		7	9 4 4	< 0.25 F	22
449.0	Very soft, brown SILTY CLAY LOAM, trace gravel; wet --RDR 2--		8	4 4 3	< 0.25 F	15
447.5	Medium dense, brown SANDY	20				

Elevation (ft)	SOIL AND ROCK DESCRIPTION	Depth (ft)	Sample No.	SPT Values (blw/6 in)	Qu (tsf)	Moisture Content (%)
	GRAVEL; saturated --RDR 2--		9	6 10 13	NP	10
444.0	Very soft, gray SILTY CLAY LOAM, some gravel; wet --RDR 2--	25	10	2 5 9	< 0.25 P	11
441.5	Loose to medium dense, brown SANDY GRAVEL; saturated --RDR 2--		11	4 2 2	NP	11
	--heaving sand in augers--	30	12	4 4 9	NP	11
435.7	Medium dense, brown SAND to SANDY LOAM, trace gravel; saturated --RDR 2--		13	6 9 5	NP	24
433.3	Dense, brown SANDY GRAVEL; saturated --RDR 2--	35	14	4 15 15	NP	6
431.5	Very dense, bluish gray WEATHERED SHALE --RDR 2--		15	22 50/4"	NP	13
	--MSPT 1--	40	16	100/21"	NP	16

GENERAL NOTES

Begin Drilling: 06-03-2019 Complete Drilling: 06-03-2019
Drilling Contractor: Wang Testing Services Drill Rig: 17D50A [87%]
Driller: K&N&K Logger: E. Yim Checked by: BP
Drilling Method: 3.25" HSA; boring backfilled upon completion

WATER LEVEL DATA

While Drilling: 8.50 ft
At Completion of Drilling: DRY
Time After Drilling: NA
Depth to Water: NA

The stratification lines represent the approximate boundary between soil types; the actual transition may be gradual.

WANGENGINC 707201.GPJ WANGENG.GDT 3/12/20

Wang Engineering
wangeng@wangeng.com
1145 N. Main Street
Lombard/IL/60148
Telephone: 6309539928
Fax: 6309539938

BORING LOG RWB-12

WEI Job No.: 707-21-01

Client: Michael Baker International
Project: Cedar Street Extension at IL Route 29
Location: Tazewell County, IL

Datum: NAVD 88
Elevation: 466.95 ft
North: 1456462.51 ft
East: 2458097.06 ft
Station: 80+64.96
Offset: 4.05' Lt

Elevation (ft)	SOIL AND ROCK DESCRIPTION	Depth (ft)	Sample No.	SPT Values (blw/6 in)	Qu (tsf)	Moisture Content (%)
	--MSPT 2--		17	100/13.5"	NP	12
	--MSPT 3--	45	18	100/9"	NP	16
420.3	--MSPT 4--		19	100/8"	NP	10
	Boring terminated at 46.75 ft	50				
		55				
		60				

GENERAL NOTES

Begin Drilling: 06-03-2019 Complete Drilling: 06-03-2019
Drilling Contractor: Wang Testing Services Drill Rig: 17D50A [87%]
Driller: K&N&K Logger: E. Yim Checked by: BP
Drilling Method: 3.25" HSA; boring backfilled upon completion

WATER LEVEL DATA

While Drilling: 8.50 ft
At Completion of Drilling: DRY
Time After Drilling: NA
Depth to Water: NA

The stratification lines represent the approximate boundary between soil types; the actual transition may be gradual.

WANGENGINC 707201.GPJ WANGENG.GDT 3/12/20

Wang Engineering
wangeng@wangeng.com
1145 N. Main Street
Lombard/IL/60148
Telephone: 6309539928
Fax: 6309539938

BORING LOG RWB-14HA

WEI Job No.: 707-21-01

Client: Michael Baker International
Project: Cedar Street Extension at IL Route 29
Location: Tazewell County, IL

Datum: NAVD 88
Elevation: 496.74 ft
North: 1456278.58 ft
East: 2458091.54 ft
Station: 308+46.63
Offset: 32.72' Lt

Elevation (ft)	SOIL AND ROCK DESCRIPTION	Depth (ft)	Sample No.	SPT Values (blw/6 in)	Qu (tsf)	Moisture Content (%)
496.2	6-inch thick, stiff, black SILTY CLAY LOAM --TOPSOIL--		1	PUSH	1.75 P	8
	Brown, gravelly LOAM; dry --3-inch thick, clay loam lenses-- --FILL--		2	PUSH	NP	12
492.9	Stiff, brown CLAY LOAM --FILL--					
491.7	Brown, medium SAND; damp --FILL--	5	3	PUSH	1.75 P	15
			4	PUSH	NP	6
			5	PUSH	NP	11
	--trace gravel--	10	6	PUSH	NP	13
	--2-inch thick, stiff (1.50 P), clay loam lenses--		7	PUSH	NP	9
	--wet--	15	8	PUSH	NP	12
481.2	Very stiff, brown and gray CLAY LOAM, trace to little gravel		9	PUSH	3.50 P	12
476.7		20	10	PUSH	3.75 P	13
	Boring terminated at 20.00 ft					

GENERAL NOTES

Begin Drilling: 06-19-2019 Complete Drilling: 06-19-2019
Drilling Contractor: Wang Testing Services Drill Rig: GEOPROBE
Driller: N&A&B Logger: F. Bozga Checked by: JAR
Drilling Method: 1" IDA Pneumatic Geoprobe LB Sampler

WATER LEVEL DATA

While Drilling: 14.00 ft
At Completion of Drilling: 16.00 ft
Time After Drilling: NA
Depth to Water: NA

The stratification lines represent the approximate boundary between soil types; the actual transition may be gradual.

WANGENGINC 707201.GPJ WANGENG.GDT 3/12/20

MODEL: Default
FILE NAME: pw:\\mbs-us-pw.bentley.com:mbs-us-pw-03\Documents\Chicago_IL\01 Projects\179740 IDOT Ceda-SExt PhII\5.0 CADD\CAD Sheets\0900182-68C55-193-Bor12.dgn

Michael Baker INTERNATIONAL
200 W Adams Street
Suite 1500
Chicago, IL 60606
PH: 312.707.8700
FAX: 312.707.8804

USER NAME = DLamb	DESIGNED -	REVISED -
	CHECKED -	REVISED -
PLOT SCALE = 0:2.0000 ':" / in.	DRAWN -	REVISED -
PLOT DATE = 6/6/2023	CHECKED -	REVISED -

STATE OF ILLINOIS
DEPARTMENT OF TRANSPORTATION

BORING LOGS 12
STRUCTURE NO. 090–0182

SHEET S-193 OF S-194 SHEETS

F.A.P. RTE.	SECTION	COUNTY	TOTAL SHEETS	SHEET NO.
VAR.	13 (HVB, HB-3) BR-1;R	TAZEWELL	1173	719

CONTRACT NO. 68C55

ILLINOIS | FED. AID PROJECT

Wang Engineering
wangeng@wangeng.com
1145 N. Main Street
Lombard/IL/60148
Telephone: 6309539928
Fax: 6309539938

BORING LOG RWB-15

WEI Job No.: 707-21-01

Client: Michael Baker International
Project: Cedar Street Extension at IL Route 29
Location: Tazewell County, IL

Datum: NAVD 88
Elevation: 470.27 ft
North: 1456248.28 ft
East: 2458032.96 ft
Station: 59+63.10
Offset: 0.61' Rt

Elevation (ft)	SOIL AND ROCK DESCRIPTION	Depth (ft)	Sample Type / recovery	Sample No.	SPT Values (blw/6 in)	Qu (tsf)	Moisture Content (%)
469.94	4-inch thick TOPSOIL						
	--TOPSOIL--						
	Soft to very stiff, brown SILTY CLAY LOAM, trace gravel; damp to moist			1	4 7 9	2.00 P	12
	--RDR 2--						
		5		2	2 5 5	1.72 B	12
	--1-inch thick, black gravel lens; moist--			3	4 2 2	0.66 B	22
	--1-inch thick, black gravel lens; moist--	10		4	2 1 2	0.41 B	30
459.8	Soft, brown and black CLAY LOAM; moist						
	--RDR 2--			5	5 7 8	0.33 B	18
457.3	Medium dense, brown SANDY GRAVEL; saturated						
	--RDR 2--	15		6	6 8 8	NP	9
454.8	Loose to medium dense, brown, coarse SAND; saturated						
	--RDR 2 to 3--			7	1 3 5	NP	14
451.3	Stiff, brown CLAY LOAM, little gravel; moist	20		8	6 7 8	1.00 P	16

Elevation (ft)	SOIL AND ROCK DESCRIPTION	Depth (ft)	Sample Type / recovery	Sample No.	SPT Values (blw/6 in)	Qu (tsf)	Moisture Content (%)
449.8	--2-inch thick gravel lens; saturated--						
	--RDR 2--						
	Medium dense, brown SILTY LOAM; damp to wet			9	8 4 10	NP	18
	--RDR 2--						
	--trace gravel--						
	--sandy gravel lens--						
	--0.5-inch thick clay lenses--	25		10	5 8 14	NP	21
	--5-inch thick sandy gravel; saturated--			11	5 9 12	NP	24
441.3	--sand and sandy gravel lenses; wet to saturated--						
	Soft to medium stiff, gray SILTY CLAY LOAM to SILTY LOAM, trace gravel; damp	30		12	5 6 4	0.82 B	14
	--RDR 2--			13	7 13 18	0.33 S	9
437.3	Dense to very dense, bluish gray, weathered SHALE						
	--RDR 2--						
	--MSPT 1--						
	--vertical fracture--	35		14	00/17	NP	13
	--MSPT 2--			15	00/21	NP	16
	--MSPT 3--	40		16	00/11.5	NP	14

GENERAL NOTES

Begin Drilling: 05-29-2019 Complete Drilling: 05-29-2019
Drilling Contractor: Wang Testing Services Drill Rig: 17D50A [87%]
Driller: K&N&K Logger: E. Yim Checked by: RKC
Drilling Method: 3.25" HSA; boring backfilled upon completion

WATER LEVEL DATA

While Drilling: 13.00 ft
At Completion of Drilling: 18.00 ft
Time After Drilling: NA
Depth to Water: NA

The stratification lines represent the approximate boundary between soil types; the actual transition may be gradual.

Wang Engineering
wangeng@wangeng.com
1145 N. Main Street
Lombard/IL/60148
Telephone: 6309539928
Fax: 6309539938

BORING LOG RWB-15

WEI Job No.: 707-21-01

Client: Michael Baker International
Project: Cedar Street Extension at IL Route 29
Location: Tazewell County, IL

Datum: NAVD 88
Elevation: 470.27 ft
North: 1456248.28 ft
East: 2458032.96 ft
Station: 59+63.10
Offset: 0.61' Rt

Elevation (ft)	SOIL AND ROCK DESCRIPTION	Depth (ft)	Sample Type / recovery	Sample No.	SPT Values (blw/6 in)	Qu (tsf)	Moisture Content (%)
	--MSPT 4--			17	00/11	NP	13
426.4	Boring terminated at 41.90 ft						
		45					
		50					
		55					
		60					

GENERAL NOTES

Begin Drilling: 05-29-2019 Complete Drilling: 05-29-2019
Drilling Contractor: Wang Testing Services Drill Rig: 17D50A [87%]
Driller: K&N&K Logger: E. Yim Checked by: RKC
Drilling Method: 3.25" HSA; boring backfilled upon completion

WATER LEVEL DATA

While Drilling: 13.00 ft
At Completion of Drilling: 18.00 ft
Time After Drilling: NA
Depth to Water: NA

The stratification lines represent the approximate boundary between soil types; the actual transition may be gradual.

WANGENGINC 707201.GPJ WANGENG.GDT 3/12/20

Bench Mark: Set railroad spike in light pole Sta. ±113+54.45, Elev. 494.30.

Existing Structure: S.N. 090-0035 was built as Route FA-10, Section 13-HB-3 at Station 83+67.13 in 1963. The existing structure consists of 3 spans. The beams are three simple spans with different skews in each span. The back to back abutment measures 157'-11" long perpendicular to the substructure and 48'-0" out to out of deck. The structure is to be removed and replaced. Traffic is to be detoured.

Salvage: None

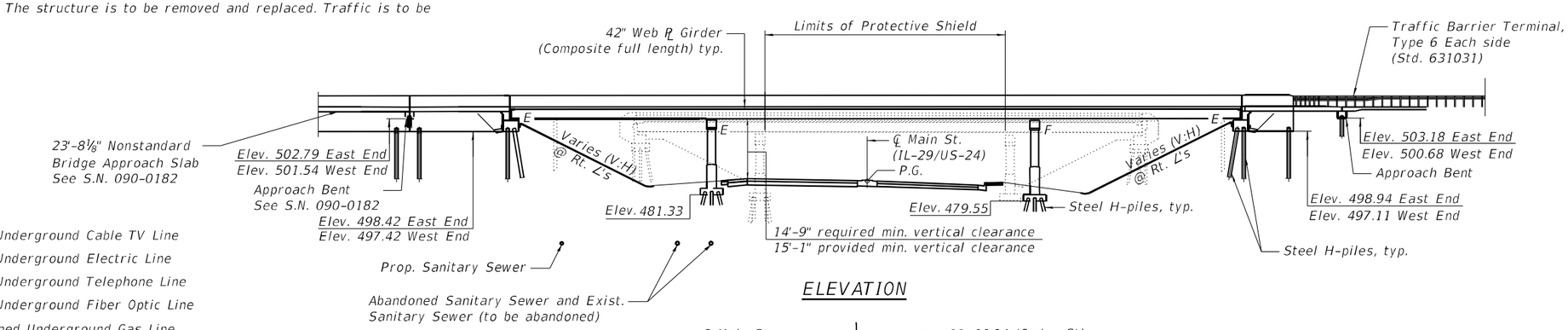

ELEVATION

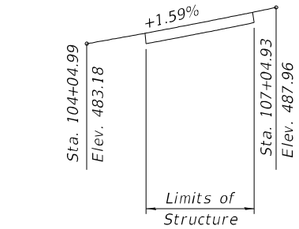

PROFILE GRADE

(℄ Main St)

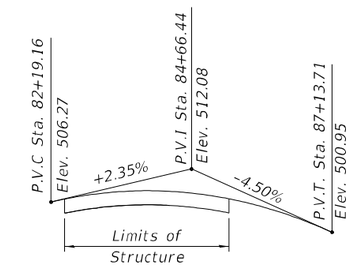

V.C = 494.55'

PROFILE GRADE

(℄ Cedar St)
The profile grade shows the final elevations after grinding

LEGEND

- Exist. Underground Cable TV Line
- Exist. Underground Electric Line
- Exist. Underground Telephone Line
- Exist. Underground Fiber Optic Line
- Abandoned Underground Gas Line
- Exist. Underground Water Line
- Exist. Underground Sanitary Sewer Line to be relocated
- Exist. Manhole to be relocated
- Exist. Light pole to be relocated
- Exist. Traffic sign to be relocated
- Soil Boring

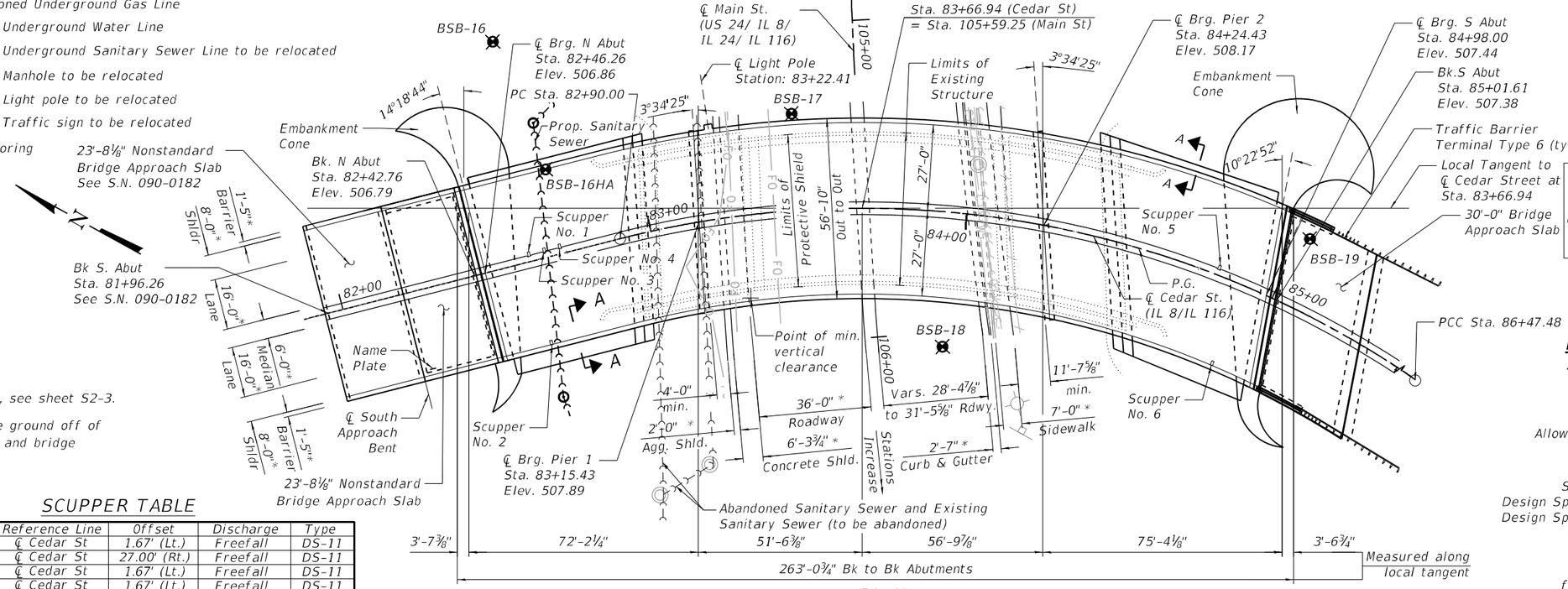

PLAN

* Measured Radially

Notes:

For section A-A, see sheet S2-3.

Up to ¼" may be ground off of the bridge deck and bridge approach slabs.

SCUPPER TABLE

ID	Station	Reference Line	Offset	Discharge	Type
1	82+61.00	℄ Cedar St	1.67' (Lt.)	Freefall	DS-11
2	82+61.00	℄ Cedar St	27.00' (Rt.)	Freefall	DS-11
3	82+66.00	℄ Cedar St	1.67' (Lt.)	Freefall	DS-11
4	82+71.00	℄ Cedar St	1.67' (Lt.)	Freefall	DS-11
5	84+80.00	℄ Cedar St	1.67' (Lt.)	Freefall	DS-11
6	84+90.00	℄ Cedar St	27.00' (Rt.)	Freefall	DS-11

CURVE DATA

(Main St)
PI Sta = 105+43.03
Δ = 13° 13' 30" (LT)
D = 1° 57' 00"
R = 2938.24'
T = 340.62'
L = 678.21'
E = 19.68'
P.C Sta = 102+02.42
P.T Sta = 108+80.63

CURVE DATA

(Cedar St)
PI Sta = 84+91.93
Δ = 66° 30' 01" (RT)
D = 18° 36' 09"
R = 308.00'
T = 201.93'
L = 357.48'
E = 60.30'
P.C Sta = 82+90.00
P.T Sta = 86+47.48

STATE OF ILLINOIS
MARY LOUISE KUTSKA
081-008008
LICENSED STRUCTURAL ENGINEER

Signed Mary Louise Kutska
Mary Louise Kutska
Il. Lic. No. 081-008008
Expires 11-30-2024
Date 6/8/2023
For Sheets S2-5 Thru S2-29 & S2-41

STATE OF ILLINOIS
PANKAJ KUMAR
081-007577
LICENSED STRUCTURAL ENGINEER

Signed Pankaj Kumar
Pankaj Kumar
Il. Lic. No. 081-007577
Expires 11-30-2024
Date 6/8/2023
For Sheets S2-1 Thru S2-4, S2-30 Thru S2-40 & S2-42 Thru S2-47

APPROVED
For Structural Adequacy Only
Engineer of Bridges & Structures

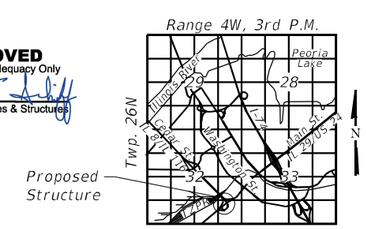

LOCATION SKETCH

STATION 83+66.94
BUILT BY
STATE OF ILLINOIS
F.A.P. RT. 669 SEC. 13 (HVB, HB-3) BR-1;R
LOADING HL-93
STR. NO. 090-0183

NAME PLATE

See Std. 515001

DESIGN SPECIFICATIONS

2020 AASHTO LRFD Bridge Design Specifications, 9th Edition

LOADING HL-93

Allow 50#/sq. ft. for future wearing surface.

SEISMIC DATA

Seismic Performance Zone (SPZ) = 1
Design Spectral Acceleration at 1.0 sec. (SD1) = 0.080
Design Spectral Acceleration at 0.2 sec. (SDS) = 0.134
Soil Site Class = C

DESIGN STRESSES

f'c = 3,500 psi (Substructure Concrete)
f'c = 4,000 psi (Superstructure Concrete)
fy = 60,000 psi (Reinforcement)
fy = 50,000 psi (M270 Grade 50)

GENERAL PLAN AND ELEVATION
IL 8/IL 116 (CEDAR STREET) OVER US 24/IL 8/IL 29/IL 116 (MAIN STREET)
F.A.P RTE 669 - SECTION 13 (HVB, HB-3) BR-1;R
TAZEWELL COUNTY
STATION 83+66.94
STRUCTURE NUMBER 090-0183

INFRASTRUCTURE ENGINEERING | INCORPORATED

USER NAME = Joseph.Kauzlarich	DESIGNED - SPK	REVISED -	
	CHECKED - PK	REVISED -	
PLOT SCALE = 40.0000 ' / in.	DRAWN - CLL	REVISED -	
PLOT DATE = 5/10/2023	CHECKED - SPK	REVISED -	

STATE OF ILLINOIS
DEPARTMENT OF TRANSPORTATION

SHEET S2-1 OF S2-47 SHEETS

F.A.P. RTE.	SECTION	COUNTY	TOTAL SHEETS	SHEET NO.
VAR.	13 (HVB, HB-3) BR-1;R	TAZEWELL	1173	721
		CONTRACT NO. 68C55		
		ILLINOIS FED. AID PROJECT		

MODEL: Default
FILE NAME: pw:\\mo-i-pw.bentley.com:mb-i-pw-03\Documents\Chicago - IL\01_Projects\179740 IDOT Cedar\Site 4 Phase 1\5.0 CADD\CAD Sheets\Main - St. Bridge Sheets\090-0183-68C55-001-GPR.dgn

GENERAL NOTES

1. Fasteners shall be hot-dip galvanized ASTM F3125 Grade A325 Type 1, bolts 7/8 in. ∅, holes 15/16 in. ∅, unless otherwise noted. See Special Provision Hot-Dip Galvanizing for Structural Steel.

2. Calculated weight of Structural Steel = 572,310 Pounds.

3. No field welding is permitted except as specified in the contract documents.

4. Reinforcement bars designated (E) shall be epoxy coated.

5. Bearing seat surfaces shall be constructed or adjusted to the designated elevations within a tolerance of 1/8 in. (0.01 ft). Adjustment shall be made either by grinding the surface or by shimming the bearings.

6. Concrete Sealer shall be applied to the designated areas of the abutments and piers.

7. The existing structural steel coating contains lead. The Contractor shall take appropriate precautions to deal with the presence of lead on this project.

8. All new structural steel shall be galvanized. See Special Provision for "Hot Dip Galvanizing for Structural Steel".

9. The embankment configuration shown on sheet S2-1 shall be the minimum that must be placed and compacted prior to construction of the abutments.

10. The Contractor shall field verify exact location of all existing utilities prior to construction and take precautions not to damage existing utilities during excavations, footing construction, or other underground work. Any such damage shall be repaired by the Contractor at no additional cost.

11. A deck pour sequence is required to prevent uplift. See sheet S2-15.

12. Slipforming of the parapets is not allowed.

13. The existing bearings contain lead plates. The Contractor shall take precautions to deal with the presence of lead on this project.

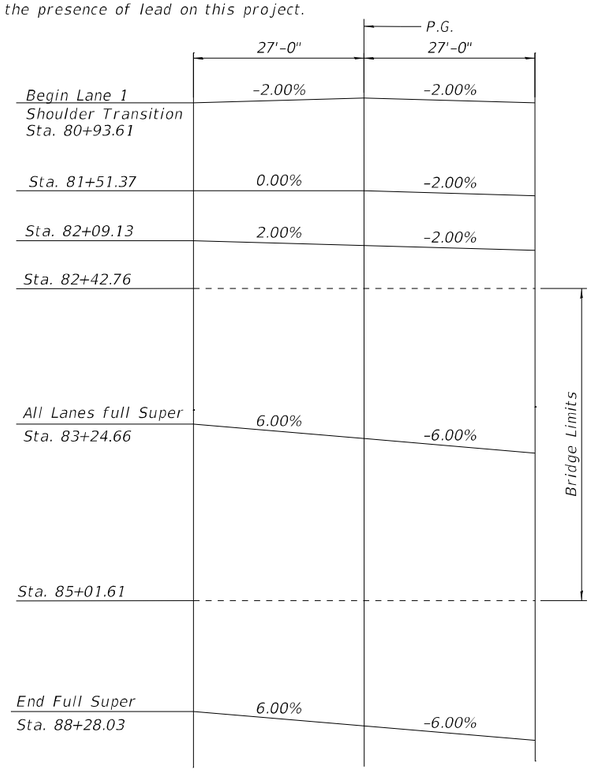

CROSS -SLOPE TRANSITIONS
(Looking South)

INDEX OF SHEETS

TOTAL BILL OF MATERIAL

	ITEM	UNIT	SUPER	SUB	TOTAL
**	Removal of Existing Structures No. 2	Each	---	---	1
	Protective Shield	Sq. Yd.	412	---	412
	Structure Excavation	Cu. Yd.	---	601	601
	Concrete Structures	Cu. Yd.	---	448.6	448.6
	Concrete Superstructure	Cu. Yd.	507.1	---	507.1
	Concrete Encasement	Cu. Yd.	---	16.4	16.4
*	Protective Coat	Sq. Yd.	2,179	---	2,179
	Concrete Superstructure (Approach Slab)	Cu. Yd.	146.9	---	146.9
	Furnishing And Erecting Structural Steel	L. Sum	0.11	---	0.11
	Stud Shear Connectors	Each	7,248	---	7,248
	Reinforcement Bars, Epoxy Coated	Pound	199,120	60,190	259,310
	Slope Wall 4 Inch	Sq. Yd.	---	775	775
	Furnishing Steel Piles HP12x53	Foot	---	4,757	4,757
	Driving Piles	Foot	---	4,757	4,757
	Test Pile Steel HP12x53	Each	---	5	5
	Pile Shoes	Each	---	95	95
	Name Plates	Each	1	---	1
	Preformed Joint Strip Seal	Foot	114	---	114
	Anchor Bolts, 3/4"	Each	64	---	64
	Anchor Bolts, 1"	Each	32	---	32
	Anchor Bolts, 1 1/4"	Each	32	---	32
	Granular Backfill For Structures	Cu. Yd.	---	243	243
	Concrete Sealer	Sq. Ft.	---	3,896	3,896
	Geocomposite Wall Drain	Sq. Yd.	---	143	143
	Pipe Underdrains For Structures 4"	Foot	---	179	179
	Bridge Deck Grooving (Longitudinal)	Sq. Yd.	1,100	---	1,100
	High Load Multi-Rotational Bearings, Pot, Fixed-400K	Each	8	---	8
	High Load Multi-Rotational Bearings, Pot, Guided Expansion-100K	Each	8	---	8
	High Load Multi-Rotational Bearings, Pot, Guided Expansion-200K	Each	8	---	8
	High Load Multi-Rotational Bearings, Pot, Guided Expansion-300K	Each	8	---	8
	Drainage Scuppers, DS-11	Each	6	---	6
	Diamond Grinding (Bridge Section)	Sq. Yd.	1,444	---	1,444

* Quantity is for roadway, median, and inside face and top of parapets and curbs

** Removal of Existing Structures No. 2 shall be in accordance with Section 501 of the Standard Specifications. This item shall include complete removal of the concrete bridge rails, bridge superstructure and appurtenances, and slopewalls. This item shall include necessary removal of the bridge substructure and bridge approach bent piles to accomodate proposed construction.

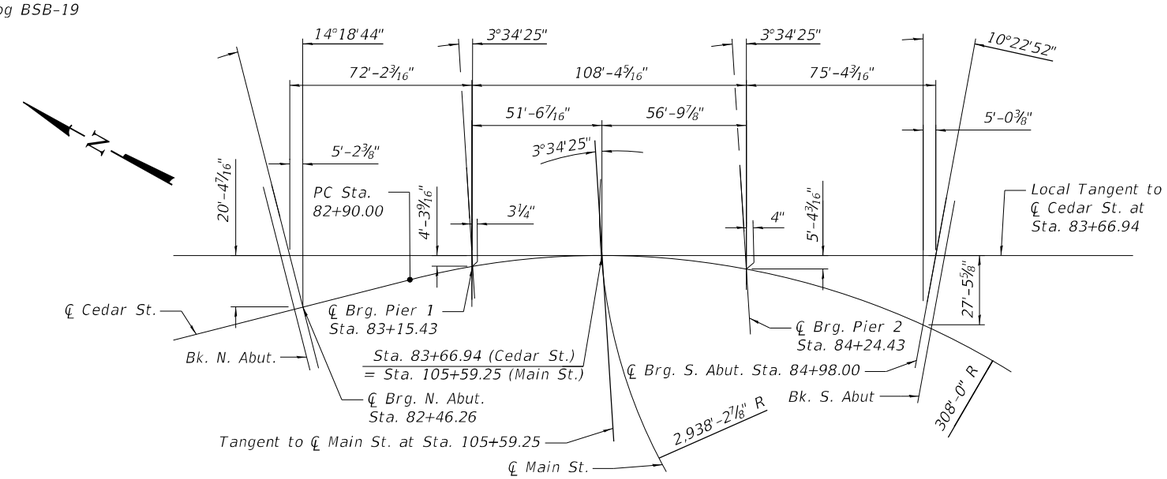

OFFSET SKETCH

INFRASTRUCTURE ENGINEERING INCORPORATED	USER NAME = Jaime.Rivera	DESIGNED - SPK -	REVISED -	STATE OF ILLINOIS DEPARTMENT OF TRANSPORTATION
		CHECKED - PK -	REVISED -	
	PLOT SCALE = 0.1667 ' / in.	DRAWN - CLL -	REVISED -	
	PLOT DATE = 5/1/2025	CHECKED - SPK -	REVISED -	

GENERAL NOTES, OFFSET SKETCH AND CROSS SLOPE TRANSITIONS
STRUCTURE NO. 090-0183

SHEET S2-2 OF S2-47 SHEETS

F.A.P. RTE.	SECTION	COUNTY	TOTAL SHEETS	SHEET NO.
VAR.	13 (HVB, HB-3) 8R-1:R	TAZEWELL	1173	722
		CONTRACT NO. 68C55		
	ILLINOIS	FED. AID PROJECT		

MODEL: Default
FILE NAME: pw:\\ms-ais-pw.bentley.com:mb-ais-pw-03\Documents\Chicago IL\01 Projects\179740 IDOT Cedar\SiEx+ Phll\5.0 CADD\CAD Sheets\Main St. Bridge Sheets\0090183-68C55-002-GenNotes.dgn

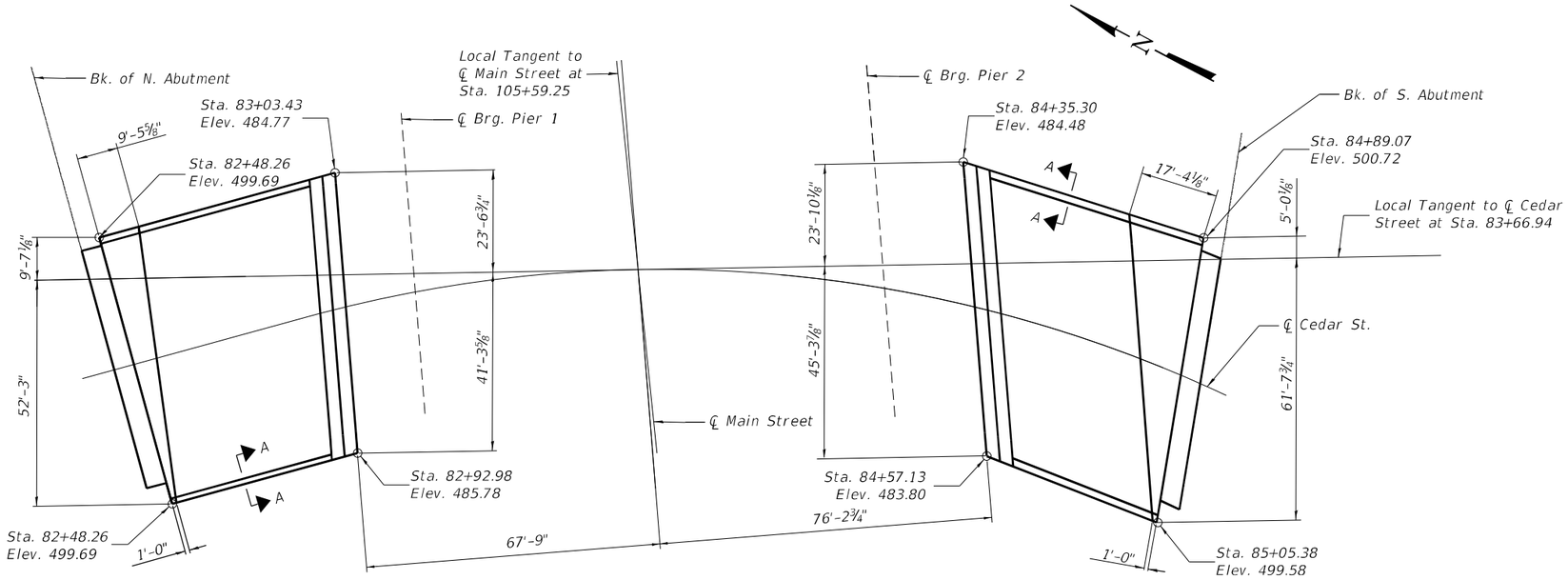

SLOPEWALL PLAN

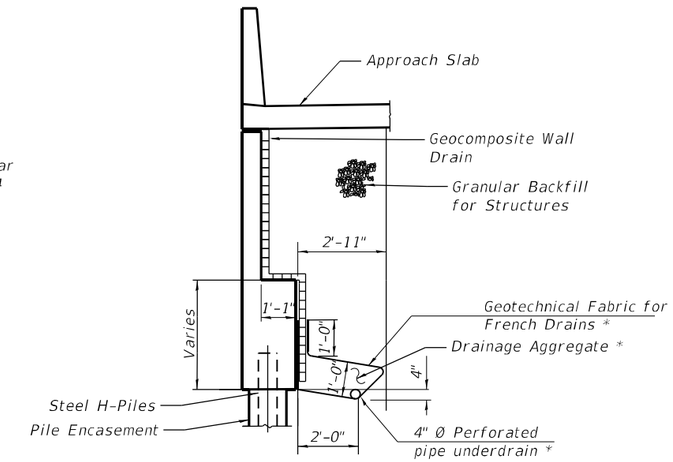

TYPICAL SECTION THRU WINGWALLS

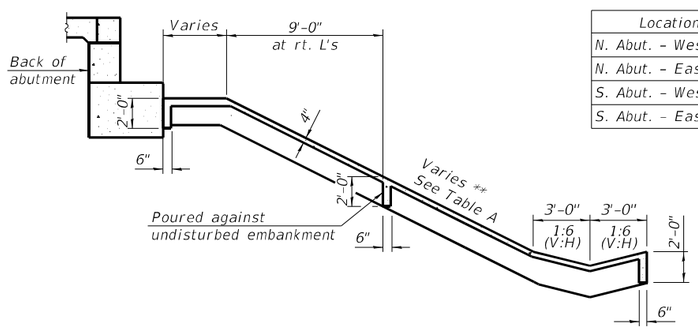

SECTION THRU
CONCRETE SLOPEWALL

Slope wall shall be reinforced with welded wire fabric-galvanized,
6 in x 6 in.- W4.0 x W4.0 weighing 58 lbs. per 100 sq. ft.
Provide additional toe walls as required.
Maximum spacing between toe walls is 10'-0".
Berms shal be sloped ½ in. per ft. to drain.

Table A

Location	Slope (V:H)
N. Abut. - West End	1:2.7
N. Abut. - East End	1:2.8
S. Abut. - West End	1:2.0
S. Abut. - East End	1:2.1

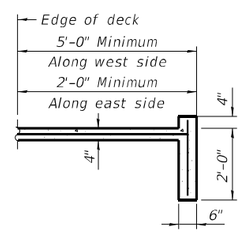

SECTION A-A

*Included in the cost of pipe underdrains for structures
** At right angle to ℄ Pier

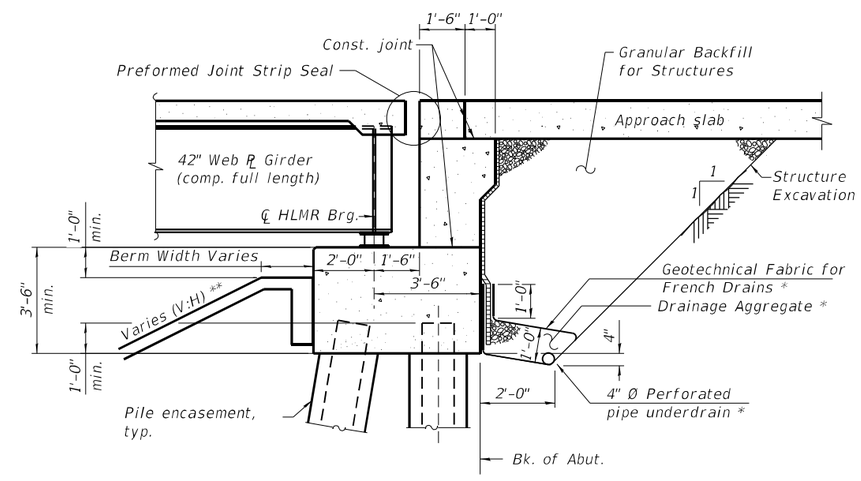

TYPICAL SECTION THRU ABUTMENTS

Notes:

All drainage system components shall extend to 2'-0" from the end of each wingwall except an outlet pipe shall extend until intersecting with the side slopes. The pipes shall drain into concrete headwalls. (See Article 601.05 of the Standard Specifications and Highway Standards 601101).

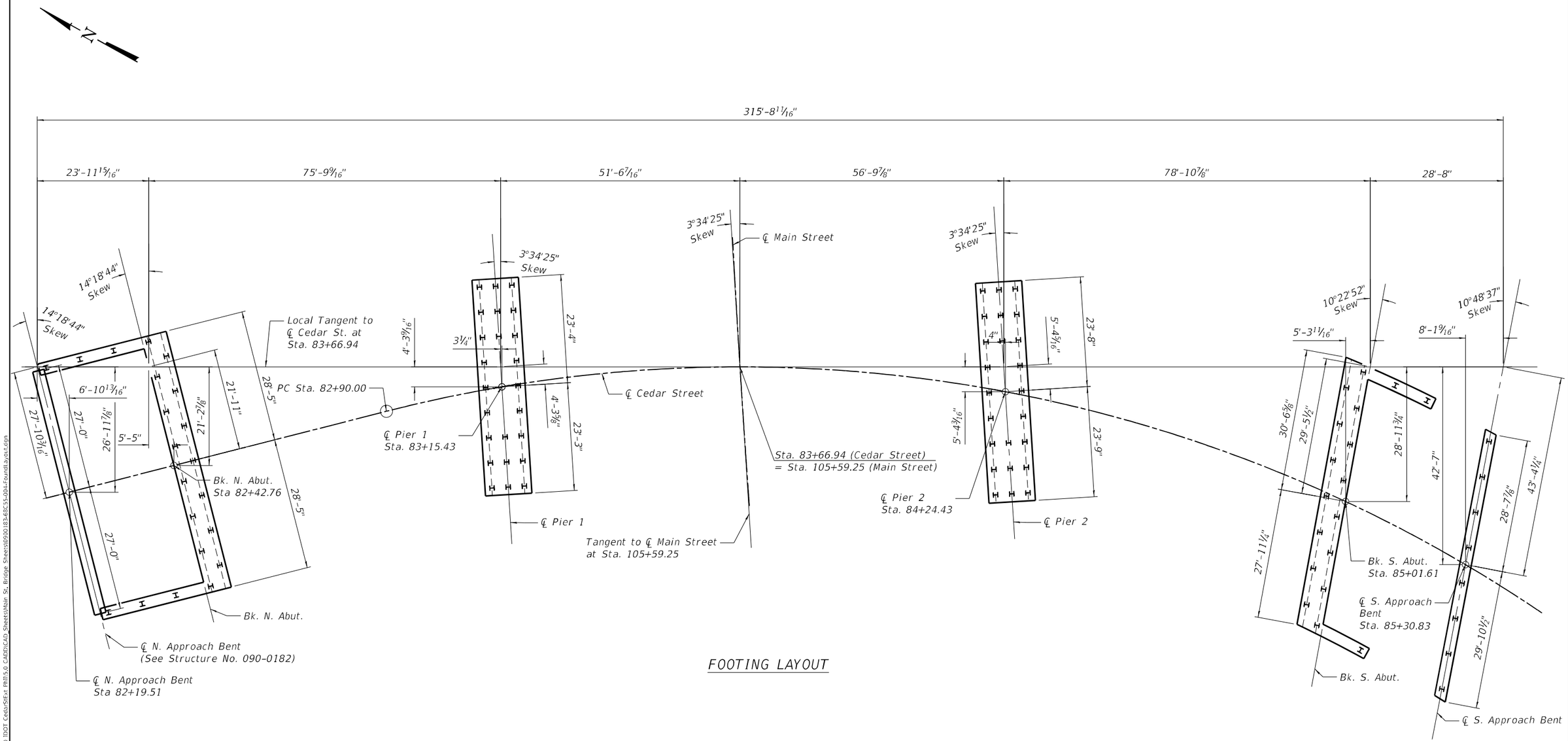

FOOTING LAYOUT

Notes:

For location of structural soil boring logs, see sheet S2-1.

For soil boring logs, see sheets S2-43, S2-44, S2-45, and S2-46.

MODEL: Default
FILE NAME: pw:\\ms-us-pw.bentley.com:mb-us-pw-03\Documents\Chicago IL\01 Projects\179740 IDOT Cedar\SiEx Phlt\5.0 CADD\CAD Sheets\Main St. Bridge Sheets\0090183-68C55-004-FoundLayout.dgn

INFRASTRUCTURE ENGINEERING | INCORPORATED

USER NAME = DLamb	DESIGNED - SPK	REVISED -	
	CHECKED - PK	REVISED -	
PLOT SCALE = 21.3332 ' / in.	DRAWN - CLL	REVISED -	
PLOT DATE = 6/6/2023	CHECKED - SPK	REVISED -	

STATE OF ILLINOIS
DEPARTMENT OF TRANSPORTATION

FOOTING LAYOUT
STRUCTURE NO. 090-0183

SHEET S2-4 OF S2-47 SHEETS

F.A.P. RTE.	SECTION	COUNTY	TOTAL SHEETS	SHEET NO.
VAR.	13 (HVB, HB-3) BR-1:R	TAZEWELL	1173	724
		CONTRACT NO. 68C55		
	ILLINOIS	FED. AID PROJECT		

VARIABLE DIMENSION TABLE																			
Location	L	L1	L2	L3	"A"	"B"	"C"	"D"	"E"	"F"	a	b	c	d	e	f	g	h	i
Girder 1	262'- 7½"	73'-11 9/16"	108'-10 7/16"	79'-9½"	13'-11 9/16"	8'-10 7/16"	9'-9½"	±18'-5⅞"	±27'-2⅝"	19'-11⅜"	⅛"	⅛"	0"	¾"	1¼"	¾"	⅛"	⅜"	⅜"
Girder 2	259'- 6 3/16"	72'-7⅛"	108'-10⅞"	78'-0 3/16"	12'-7⅛"	8'-10⅞"	8'-0 3/16"	±18'-1 13/16"	±27'-2 11/16"	±19'-6 1/16"	⅛"	⅛"	0"	¾"	1¼"	¾"	0"	¼"	¼"
Girder 3	256'-4 13/16"	71'-2 11/16"	108'-11 5/16"	76'- 2 13/16"	11'-2 11/16"	8'-11 5/16"	6'-2 13/16"	±17'-9 11/16"	±27'-2 13/16"	±19'-0 11/16"	⅛"	⅛"	0"	¾"	1⅛"	¾"	0"	¼"	¼"
Girder 4	253'- 3½"	69'-10¼"	108'-11¾"	74'-5½"	9'-10¼"	8'-11¾"	14'-5½"	17'-5 9/16"	27'-2 15/16"	18'-7⅜"	⅛"	⅛"	0"	¾"	1⅛"	¾"	0"	⅛"	¼"
℄ Cedar St.	251'- 8⅞"	69'-2 1/16"	109'-0"	73'-6 13/16"	9'-2 1/16"	9'-0"	13'-6 13/16"	±17'-3½"	27'-3"	±18'-4 11/16"	⅛"	⅛"	0"	¾"	1⅛"	¾"	0"	⅛"	⅛"
Girder 5	250'- 2¼"	68'-5 13/16"	109'-0¼"	72'- 8 3/16"	8'-5 13/16"	9'-0¼"	12'-8 13/16"	±17'-1 7/16"	27'-3 1/16"	±18'-2 1/16"	⅛"	⅛"	0"	¾"	1⅛"	¾"	0"	⅛"	⅛"
Girder 6	247'- 1"	67'-1⅜"	109'-0 13/16"	70'-10 13/16"	7'-1⅜"	9'-0 13/16"	10'-10 13/16"	±16'-9 5/16"	±27'-3 3/16"	±17'-8 11/16"	⅛"	0"	0"	¾"	1⅛"	¾"	0"	⅛"	⅛"
Girder 7	243'- 11 13/16"	65'-8 13/16"	109'-1⅜"	69'- 1½"	5'-8 15/16"	9'-1⅜"	9'-1½"	±16'-5¼"	±27'-3 9/16"	17'-3⅜"	⅛"	0"	0"	⅝"	1⅛"	⅝"	0"	⅛"	⅛"
Girder 8	240'- 10⅝"	64'-4½"	109'-2"	67'-4⅛"	14'-4½"	9'-2"	7'-4⅛"	16'-1⅛"	27'-3½"	±16'-10 1/16"	⅛"	0"	0"	⅝"	1"	⅝"	0"	0"	⅛"

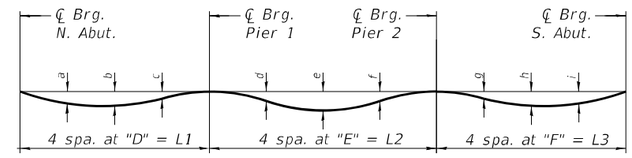

DEAD LOAD DEFLECTION DIAGRAM

(Includes weight of concrete only.)

The above deflections are not to be used in the field if the engineer is working from the grade elevations adjusted for dead load deflections and grinding as shown on sheets S2-6, S2-7, & S2-8.

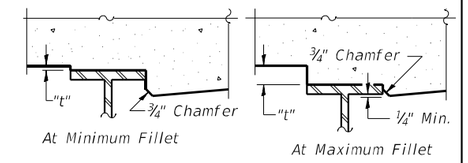

To determine "t": After all structural steel has been erected, elevations of the top flanges of the girders shall be taken at intervals shown below. These elevations subtracted from the "Theoretical Grade Elevations adjusted for Dead Load Deflection and Grinding" shown on sheets S2-6, S2-7, & S2-8 minus the initial slab thickness prior to grinding, equals the fillet heights "t" above top flange of beams.

The slab is to be ground after curing to achieve smoothness, but the slab is not to be ground to elevations below the "Theoretical Grade Elevations" shown on sheets S2-6, S2-7, & S2-8. For grinding the deck, see Special Provisions.

FILLET HEIGHTS

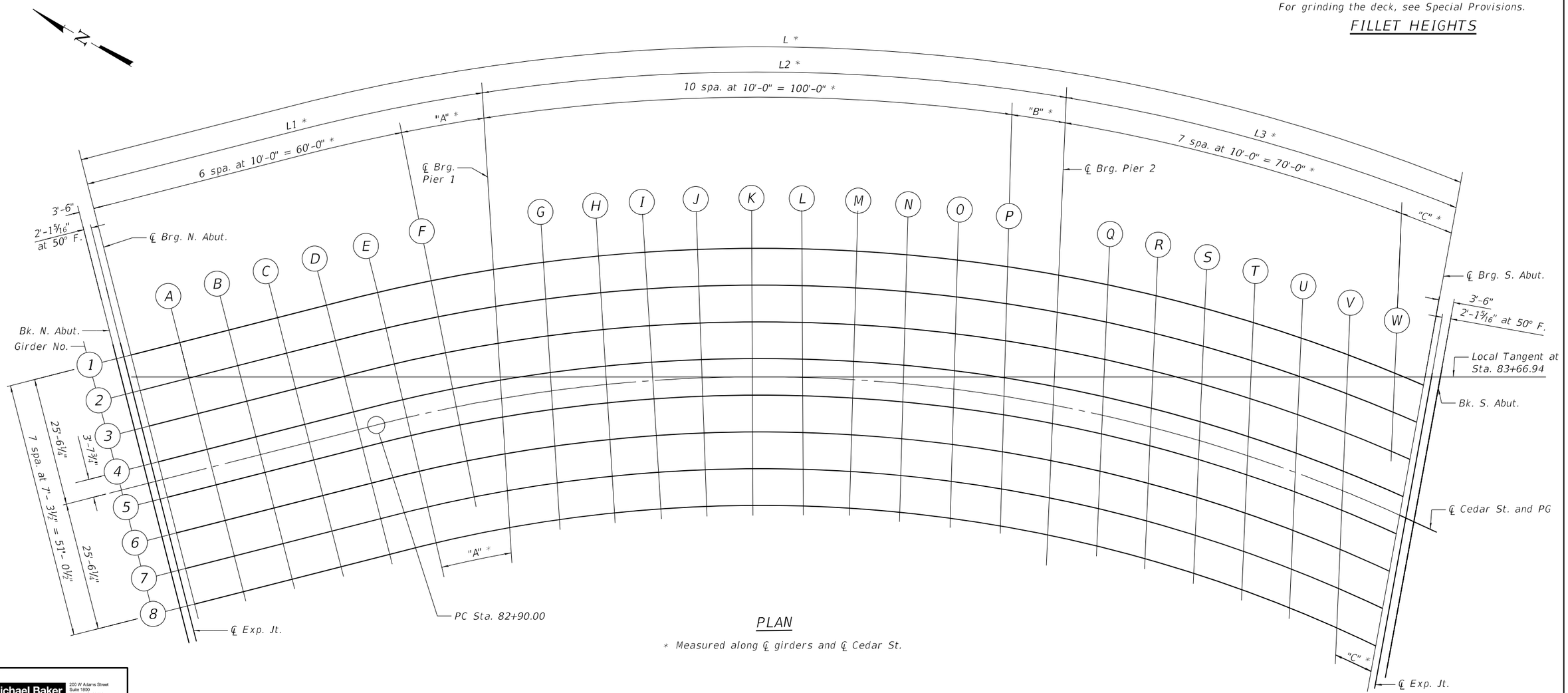

PLAN

* Measured along ℄ girders and ℄ Cedar St.

Michael Baker INTERNATIONAL
200 W Adams Street
Suite 1800
Chicago, IL 60606
P:+1 312.707.8970
FAX: 312.707.8604

INFRASTRUCTURE ENGINEERING | INCORPORATED

USER NAME = DLamb	DESIGNED - SPK	REVISED -	
	CHECKED - PK	REVISED -	
PLOT SCALE = 19.9999 ' / in.	DRAWN - CLL	REVISED -	
PLOT DATE = 6/6/2023	CHECKED - SPK	REVISED -	

STATE OF ILLINOIS
DEPARTMENT OF TRANSPORTATION

TOP OF SLAB ELEVATIONS
STRUCTURE NO. 090-0183

SHEET S2-5 OF S2-47 SHEETS

F.A.P. RTE.	SECTION	COUNTY	TOTAL SHEETS	SHEET NO.
VAR.	13 (HVB, HB-3) BR-1;R	TAZEWELL	1173	725
		CONTRACT NO. 68C55		
	ILLINOIS	FED. AID PROJECT		

GIRDER 1

Location	Station	Offset	Theoretical Grade Elevation	Theoretical Grade Elevations Adjusted for Dead Load Deflection & Grinding
Bk. N. Abut.	82+42.76	-25.52	507.59	507.61
℄ Exp. Jt.	82+44.87	-25.52	507.65	507.67
℄ Brg. N. Abut.	82+46.26	-25.52	507.69	507.71
A	82+56.26	-25.52	507.97	508.00
B	82+66.26	-25.52	508.24	508.27
C	82+76.26	-25.52	508.49	508.52
D	82+86.26	-25.52	508.73	508.75
E	82+95.78	-25.52	508.94	508.96
F	83+05.02	-25.52	509.13	509.15
℄ Pier 1	83+17.91	-25.52	509.39	509.41
G	83+27.14	-25.52	509.53	509.57
H	83+36.38	-25.52	509.60	509.67
I	83+45.61	-25.52	509.66	509.75
J	83+54.85	-25.52	509.71	509.82
K	83+64.08	-25.52	509.75	509.87
L	83+73.32	-25.52	509.78	509.90
M	83+82.55	-25.52	509.79	509.90
N	83+91.79	-25.52	509.79	509.88
O	84+01.02	-25.52	509.78	509.84
P	84+10.26	-25.52	509.76	509.80
℄ Pier 2	84+18.45	-25.52	509.73	509.75
Q	84+27.68	-25.52	509.69	509.71
R	84+36.92	-25.52	509.63	509.66
S	84+46.15	-25.52	509.57	509.60
T	84+55.39	-25.52	509.49	509.53
U	84+64.62	25.52	509.40	509.45
V	84+73.86	-25.52	509.29	509.34
W	84+83.09	-25.52	509.18	509.21
℄ Brg. S. Abut.	84+92.14	-25.52	509.05	509.07
℄ Exp. Jt.	84+93.45	-25.52	509.03	509.05
Bk. S. Abut.	84+95.46	-25.52	509.01	509.03

GIRDER 2

Location	Station	Offset	Theoretical Grade Elevation	Theoretical Grade Elevations Adjusted for Dead Load Deflection & Grinding
Bk. N. Abut.	82+42.76	-18.23	507.36	507.38
℄ Exp. Jt.	82+44.87	-18.23	507.42	507.44
℄ Brg. N. Abut.	82+46.26	-18.23	507.45	507.47
A	82+56.26	-18.23	507.71	507.74
B	82+66.26	-18.23	507.95	507.98
C	82+76.26	-18.23	508.17	508.21
D	82+86.26	-18.23	508.39	508.41
E	82+95.91	-18.23	508.58	508.60
F	83+05.35	-18.23	508.75	508.77
℄ Pier 1	83+17.24	-18.23	508.96	508.98
G	83+26.68	-18.23	509.09	509.13
H	83+36.12	-18.23	509.16	509.23
I	83+45.56	-18.23	509.23	509.31
J	83+55.00	-18.23	509.28	509.38
K	83+64.45	-18.23	509.32	509.43
L	83+73.89	-18.23	509.34	509.46
M	83+83.33	-18.23	509.35	509.46
N	83+92.77	-18.23	509.36	509.44
O	84+02.21	-18.23	509.34	509.40
P	84+11.65	-18.23	509.32	509.36
℄ Pier 2	84+20.06	-18.23	509.29	509.31
Q	84+29.50	-18.23	509.24	509.26
R	84+38.94	-18.23	509.18	509.21
S	84+48.38	-18.23	509.11	509.15
T	84+57.82	-18.23	509.03	509.07
U	84+67.27	-18.23	508.93	508.98
V	84+76.71	-18.23	508.82	508.86
W	84+86.15	-18.23	508.70	508.73
℄ Brg. S. Abut.	84+93.72	-18.23	508.59	508.61
℄ Exp. Jt.	84+95.06	-18.23	508.57	508.59
Bk. S. Abut.	84+97.11	-18.23	508.54	508.56

GIRDER 3

Location	Station	Offset	Theoretical Grade Elevation	Theoretical Grade Elevations Adjusted for Dead Load Deflection & Grinding
Bk. N. Abut.	82+42.76	-10.94	507.13	507.15
℄ Exp. Jt.	82+44.87	-10.94	507.18	507.20
℄ Brg. N. Abut.	82+46.26	-10.94	507.22	507.24
A	82+56.26	-10.94	507.44	507.47
B	82+66.26	-10.94	507.66	507.69
C	82+76.26	-10.94	507.86	507.89
D	82+86.26	-10.94	508.05	508.07
E	82+96.05	-10.94	508.22	508.24
F	83+05.70	-10.94	508.37	508.39
℄ Pier 1	83+16.54	-10.94	508.53	508.55
G	83+26.20	-10.94	508.65	508.68
H	83+35.85	-10.94	508.72	508.79
I	83+45.51	-10.94	508.79	508.87
J	83+55.17	-10.94	508.84	508.95
K	83+64.83	-10.94	508.88	508.99
L	83+74.48	-10.94	508.90	509.02
M	83+84.14	-10.94	508.92	509.02
N	83+93.80	-10.94	508.92	509.00
O	84+03.45	-10.94	508.90	508.96
P	84+13.11	-10.94	508.88	508.91
℄ Pier 2	84+21.75	-10.94	508.84	508.86
Q	84+31.41	-10.94	508.79	508.81
R	84+41.06	-10.94	508.73	508.75
S	84+50.72	-10.94	508.65	508.69
T	84+60.38	-10.94	508.56	508.60
U	84+70.04	-10.94	508.46	508.50
V	84+79.69	-10.94	508.35	508.38
W	84+89.35	-10.94	508.22	508.25
℄ Brg. S. Abut.	84+95.37	-10.94	508.13	508.15
℄ Exp. Jt.	84+96.75	-10.94	508.11	508.13
Bk. S. Abut.	84+98.85	-10.94	508.08	508.10

Michael Baker INTERNATIONAL
200 W Adams Street
Suite 1800
Chicago, IL 60606
PH: 312.707.8772
FAX: 312.707.8804

INFRASTRUCTURE ENGINEERING | INCORPORATED

USER NAME = DLamb	DESIGNED - CLL	REVISED -
	CHECKED - SPK	REVISED -
PLOT SCALE = 0.1667 ' / in.	DRAWN - CLL	REVISED -
PLOT DATE = 6/6/2023	CHECKED - SPK	REVISED -

STATE OF ILLINOIS
DEPARTMENT OF TRANSPORTATION

TOP OF SLAB ELEVATIONS
STRUCTURE NO. 090-0183

SHEET S2-6 OF S2-47 SHEETS

F.A.P. RTE.	SECTION	COUNTY	TOTAL SHEETS	SHEET NO.
VAR.	13 (HVB, HB-3) BR-1;R	TAZEWELL	1173	726
		CONTRACT NO. 68C55		
		ILLINOIS	FED. AID PROJECT	

GIRDER 4

Location	Station	Offset	Theoretical Grade Elevation	Theoretical Grade Elevations Adjusted for Dead Load Deflection & Grinding
Bk. N. Abut.	82+42.76	-3.65	506.90	506.92
℄ Exp. Jt.	82+44.87	-3.65	506.95	506.97
℄ Brg. N. Abut.	82+46.26	-3.65	506.98	507.00
A	82+56.26	-3.65	507.18	507.21
B	82+66.26	-3.65	507.37	507.40
C	82+76.26	-3.65	507.54	507.57
D	82+86.26	-3.65	507.71	507.73
E	82+96.19	-3.65	507.85	507.87
F	83+06.07	-3.65	507.98	508.00
℄ Pier 1	83+15.81	-3.65	508.10	508.12
G	83+25.69	-3.65	508.21	508.24
H	83+35.58	-3.65	508.29	508.35
I	83+45.46	-3.65	508.35	508.44
J	83+55.34	-3.65	508.40	508.51
K	83+65.23	-3.65	508.44	508.56
L	83+75.11	-3.65	508.47	508.58
M	83+84.99	-3.65	508.48	508.58
N	83+94.87	-3.65	508.48	508.56
O	84+04.76	-3.65	508.46	508.52
P	84+14.64	-3.65	508.44	508.47
℄ Pier 2	84+23.51	-3.65	508.40	508.42
Q	84+33.39	-3.65	508.34	508.36
R	84+43.28	-3.65	508.28	508.30
S	84+53.16	-3.65	508.19	508.22
T	84+63.04	-3.65	508.10	508.14
U	84+72.93	-3.65	507.99	508.03
V	84+82.81	-3.65	507.87	507.90
℄ Brg. S. Abut	84+97.10	-3.65	507.67	507.69
℄ Exp. Jt.	84+98.52	-3.65	507.65	507.67
Bk. S. Abut.	85+00.67	-3.65	507.61	507.63

℄ CEDAR ST. & PG

Location	Station	Offset	Theoretical Grade Elevation	Theoretical Grade Elevations Adjusted for Dead Load Deflection & Grinding
Bk. N. Abut.	82+42.76	0.00	506.79	506.81
℄ Exp. Jt.	82+44.87	0.00	506.83	506.85
℄ Brg. N. Abut.	82+46.26	0.00	506.86	506.88
A	82+56.26	0.00	507.05	507.07
B	82+66.26	0.00	507.22	507.25
C	82+76.26	0.00	507.39	507.41
D	82+86.26	0.00	507.53	507.56
E	82+96.26	0.00	507.67	507.69
F	83+06.26	0.00	507.79	507.81
℄ Pier 1	83+15.43	0.00	507.89	507.91
G	83+25.43	0.00	507.98	508.02
H	83+35.43	0.00	508.07	508.13
I	83+45.43	0.00	508.13	508.22
J	83+55.43	0.00	508.19	508.29
K	83+65.43	0.00	508.22	508.34
L	83+75.43	0.00	508.25	508.36
M	83+85.43	0.00	508.26	508.36
N	83+95.43	0.00	508.26	508.34
O	84+05.43	0.00	508.24	508.30
P	84+15.43	0.00	508.21	508.25
℄ Pier 2	84+24.43	0.00	508.17	508.19
Q	84+34.43	0.00	508.12	508.13
R	84+44.43	0.00	508.05	508.07
S	84+54.43	0.00	507.96	507.99
T	84+64.43	0.00	507.87	507.90
U	84+74.43	0.00	507.75	507.79
V	84+84.43	0.00	507.63	507.66
℄ Brg. S. Abut	84+98.00	0.00	507.44	507.46
℄ Exp. Jt.	84+99.43	0.00	507.41	507.43
Bk. S. Abut.	85+01.61	0.00	507.38	507.40

GIRDER 5

Location	Station	Offset	Theoretical Grade Elevation	Theoretical Grade Elevations Adjusted for Dead Load Deflection & Grinding
Bk. N. Abut.	82+42.76	3.65	506.67	506.69
℄ Exp. Jt.	82+44.87	3.65	506.71	506.73
℄ Brg. N. Abut.	82+46.26	3.65	506.74	506.76
A	82+56.26	3.65	506.91	506.94
B	82+66.26	3.65	507.08	507.11
C	82+76.26	3.65	507.23	507.26
D	82+86.26	3.65	507.36	507.39
E	82+96.33	3.65	507.49	507.51
F	83+06.45	3.65	507.60	507.61
℄ Pier 1	83+15.04	3.65	507.68	507.70
G	83+25.16	3.65	507.76	507.80
H	83+35.28	3.65	507.85	507.91
I	83+45.40	3.65	507.91	508.00
J	83+55.52	3.65	507.97	508.07
K	83+65.64	3.65	508.01	508.12
L	83+75.76	3.65	508.03	508.15
M	83+85.88	3.65	508.04	508.15
N	83+96.00	3.65	508.04	508.12
O	84+06.12	3.65	508.02	508.08
P	84+16.24	3.65	507.99	508.03
℄ Pier 2	84+25.37	3.65	507.95	507.97
Q	84+35.49	3.65	507.89	507.91
R	84+45.61	3.65	507.82	507.84
S	84+55.73	3.65	507.73	507.76
T	84+65.85	3.65	507.63	507.67
U	84+75.97	3.65	507.52	507.55
V	84+86.09	3.65	507.39	507.42
℄ Brg. S. Abut	84+98.92	3.65	507.20	507.22
℄ Exp. Jt.	85+00.37	3.65	507.18	507.20
Bk. S. Abut.	85+02.58	3.65	507.15	507.17

Michael Baker INTERNATIONAL
200 W Adams Street
Suite 1800
Chicago, IL 60606
PH: 312.707.8772
FAX: 312.707.8804

INFRASTRUCTURE ENGINEERING | INCORPORATED

USER NAME = DLamb	DESIGNED - CLL	REVISED -
	CHECKED - SPK	REVISED -
PLOT SCALE = 0.1667 ' / in.	DRAWN - CLL	REVISED -
PLOT DATE = 6/6/2023	CHECKED - SPK	REVISED -

STATE OF ILLINOIS
DEPARTMENT OF TRANSPORTATION

TOP OF SLAB ELEVATIONS
STRUCTURE NO. 090-0183

SHEET S2-7 OF S2-47 SHEETS

F.A.P. RTE.	SECTION	COUNTY	TOTAL SHEETS	SHEET NO.
VAR.	13 (HVB, HB-3) BR-1;R	TAZEWELL	1173	727
		CONTRACT NO. 68C55		
		ILLINOIS	FED. AID PROJECT	

GIRDER 6

Location	Station	Offset	Theoretical Grade Elevation	Theoretical Grade Elevations Adjusted for Dead Load Deflection & Grinding
Bk. N. Abut.	82+42.76	10.94	506.44	506.46
℄ Exp. Jt.	82+44.87	10.94	506.47	506.49
℄ Brg. N. Abut.	82+46.26	10.94	506.50	506.52
A	82+56.26	10.94	506.65	506.67
B	82+66.26	10.94	506.79	506.82
C	82+76.26	10.94	506.91	506.94
D	82+86.26	10.94	507.02	507.05
E	82+96.49	10.94	507.12	507.14
F	83+06.86	10.94	507.21	507.22
℄ Pier 1	83+14.24	10.94	507.26	507.28
G	83+24.61	10.94	507.32	507.36
H	83+34.98	10.94	507.41	507.47
I	83+45.34	10.94	507.48	507.56
J	83+55.71	10.94	507.53	507.63
K	83+66.08	10.94	507.57	507.68
L	83+76.45	10.94	507.60	507.71
M	83+86.82	10.94	507.61	507.71
N	83+97.19	10.94	507.60	507.68
O	84+07.55	10.94	507.58	507.64
P	84+17.92	10.94	507.55	507.58
℄ Pier 2	84+27.32	10.94	507.50	507.52
Q	84+37.69	10.94	507.44	507.46
R	84+48.06	10.94	507.36	507.38
S	84+58.42	10.94	507.27	507.30
T	84+68.79	10.94	507.16	507.19
U	84+79.16	10.94	507.04	507.07
V	84+89.53	10.94	506.90	506.93
℄ Brg. S. Abut	85+00.83	10.94	506.74	506.76
℄ Exp. Jt.	85+02.32	10.94	506.71	506.73
Bk. S. Abut.	85+04.59	10.94	506.68	506.70

GIRDER 7

Location	Station	Offset	Theoretical Grade Elevation	Theoretical Grade Elevations Adjusted for Dead Load Deflection & Grinding
Bk. N. Abut.	82+42.76	18.23	506.21	506.23
℄ Exp. Jt.	82+44.87	18.23	506.24	506.26
℄ Brg. N. Abut.	82+46.26	18.23	506.26	506.28
A	82+56.26	18.23	506.38	506.41
B	82+66.26	18.23	506.50	506.52
C	82+76.26	18.23	506.60	506.62
D	82+86.26	18.23	506.68	506.70
E	82+96.65	18.23	506.76	506.77
F	83+07.28	18.23	506.82	506.83
℄ Pier 1	83+13.39	18.23	506.85	506.87
G	83+24.02	18.23	506.88	506.92
H	83+34.65	18.23	506.97	507.02
I	83+45.28	18.23	507.04	507.12
J	83+55.91	18.23	507.09	507.20
K	83+66.54	18.23	507.13	507.25
L	83+77.16	18.23	507.16	507.27
M	83+87.79	18.23	507.17	507.27
N	83+98.42	18.23	507.16	507.24
O	84+09.05	18.23	507.14	507.20
P	84+19.68	18.23	507.10	507.14
℄ Pier 2	84+29.37	18.23	507.05	507.07
Q	84+40.00	18.23	506.99	507.00
R	84+50.63	18.23	506.90	506.92
S	84+61.26	18.23	506.80	506.83
T	84+71.89	18.23	506.69	506.72
U	84+82.52	18.23	506.56	506.59
V	84+93.14	18.23	506.41	506.44
℄ Brg. S. Abut	85+02.84	18.23	506.27	506.29
℄ Exp. Jt.	85+04.37	18.23	506.24	506.26
Bk. S. Abut.	85+06.70	18.23	506.21	506.23

GIRDER 8

Location	Station	Offset	Theoretical Grade Elevation	Theoretical Grade Elevations Adjusted for Dead Load Deflection & Grinding
Bk. N. Abut.	82+42.76	25.52	505.98	506.00
℄ Exp. Jt.	82+44.87	25.52	506.00	506.02
℄ Brg. N. Abut.	82+46.26	25.52	506.02	506.04
A	82+56.26	25.52	506.12	506.14
B	82+66.26	25.52	506.21	506.23
C	82+76.26	25.52	506.28	506.31
D	82+86.26	25.52	506.34	506.36
E	82+96.83	25.52	506.39	506.41
℄ Pier 1	83+12.50	25.52	506.44	506.46
G	83+23.40	25.52	506.45	506.48
H	83+34.31	25.52	506.53	506.58
I	83+45.21	25.52	506.60	506.68
J	83+56.11	25.52	506.66	506.75
K	83+67.02	25.52	506.70	506.80
L	83+77.92	25.52	506.72	506.83
M	83+88.82	25.52	506.73	506.83
N	83+99.73	25.52	506.72	506.80
O	84+10.63	25.52	506.70	506.75
P	84+21.53	25.52	506.66	506.69
℄ Pier 2	84+31.53	25.52	506.60	506.62
Q	84+42.43	25.52	506.53	506.55
R	84+53.34	25.52	506.44	506.46
S	84+64.24	25.52	506.34	506.36
T	84+75.14	25.52	506.21	506.24
U	84+86.05	25.52	506.08	506.10
V	84+96.95	25.52	505.92	505.95
℄ Brg. S. Abut	85+04.96	25.52	505.80	505.82
℄ Exp. Jt.	85+06.53	25.52	505.77	505.79
Bk. S. Abut.	85+08.92	25.52	505.73	505.75

Michael Baker INTERNATIONAL
200 W Adams Street
Suite 1800
Chicago, IL 60606
PH: 312.707.8772
FAX: 312.707.8804

INFRASTRUCTURE ENGINEERING | INCORPORATED

USER NAME = DLamb	DESIGNED - CLL	REVISED -
	CHECKED - SPK	REVISED -
PLOT SCALE = 0.1667 ' / in.	DRAWN - CLL	REVISED -
PLOT DATE = 6/6/2023	CHECKED - SPK	REVISED -

STATE OF ILLINOIS
DEPARTMENT OF TRANSPORTATION

TOP OF SLAB ELEVATIONS
STRUCTURE NO. 090–0183

SHEET S2-8 OF S2-47 SHEETS

F.A.P. RTE.	SECTION	COUNTY	TOTAL SHEETS	SHEET NO.
VAR.	13 (HVB, HB-3) BR-1;R	TAZEWELL	1173	728
		CONTRACT NO. 68C55		
		ILLINOIS	FED. AID PROJECT	

EAST EDGE OF SHOULDER

Location	Station	Offset	Theoretical Grade Elevations	Theoretical Grade Elevations Adjusted For Grinding
N. End N. Appr. Slab	82+19.58	-27.00	506.92	506.94
A1	82+29.58	-27.00	507.24	507.26
S. End N. Appr. Slab	82+43.26	-27.00	507.66	507.68

EAST EDGE OF PAVEMENT

Location	Station	Offset	Theoretical Grade Elevations	Theoretical Grade Elevations Adjusted For Grinding
N. End N. Appr. Slab	82+19.58	-19.00	506.73	506.75
A1	82+29.58	-19.00	507.02	507.04
S. End N. Appr. Slab	82+43.26	-19.00	507.40	507.42

℄ CEDAR ST. & PG

Location	Station	Offset	Theoretical Grade Elevations	Theoretical Grade Elevations Adjusted For Grinding
N. End N. Appr. Slab	82+19.58	0.00	506.28	506.30
A1	82+29.58	0.00	506.51	506.53
S. End N. Appr. Slab	82+43.26	0.00	506.80	506.82

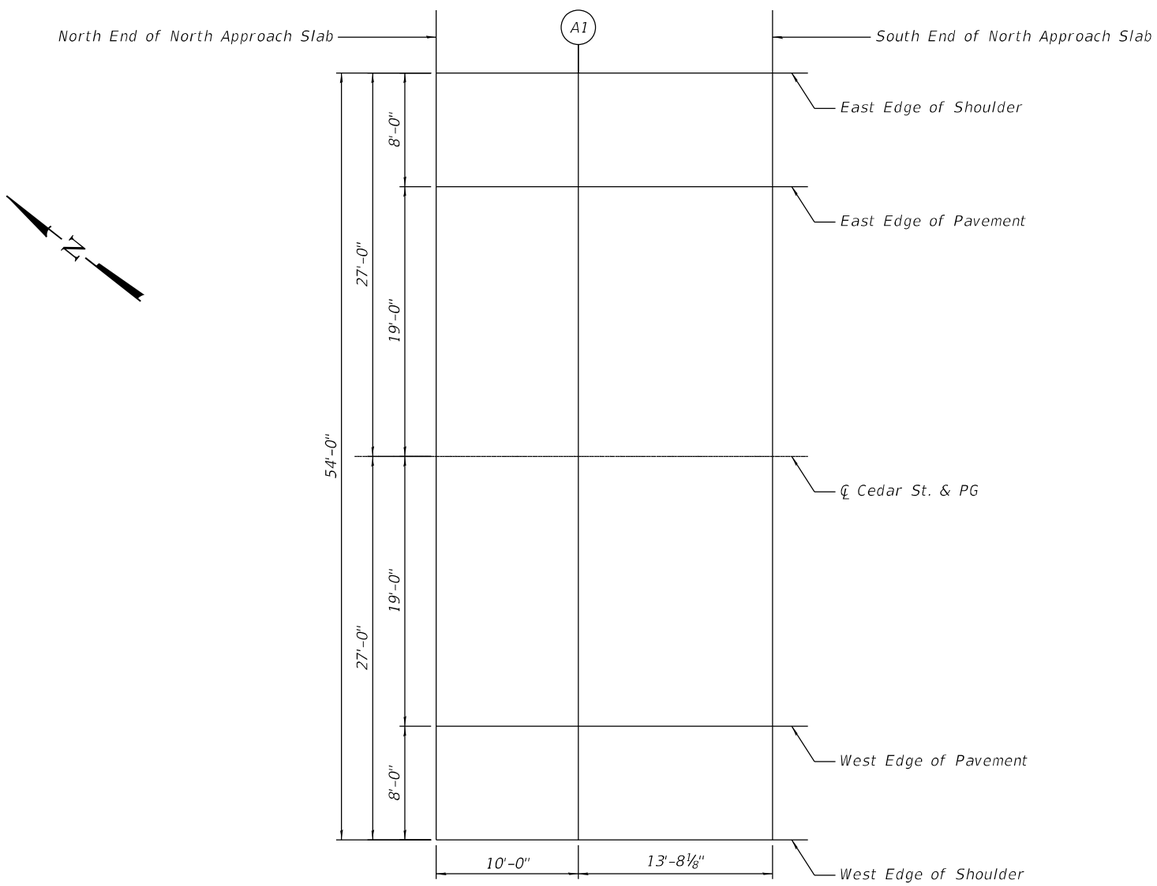

PLAN

WEST EDGE OF PAVEMENT

Location	Station	Offset	Theoretical Grade Elevations	Theoretical Grade Elevations Adjusted For Grinding
N. End N. Appr. Slab	82+19.58	19.00	505.83	505.85
A1	82+29.58	19.00	505.99	506.01
S. End N. Appr. Slab	82+43.26	19.00	506.19	506.21

WEST EDGE OF SHOULDER

Location	Station	Offset	Theoretical Grade Elevations	Theoretical Grade Elevations Adjusted For Grinding
N. End N. Appr. Slab	82+19.58	27.00	505.64	505.66
A1	82+29.58	27.00	505.78	505.80
S. End N. Appr. Slab	82+43.26	27.00	505.94	505.96

Michael Baker INTERNATIONAL
200 W Adams Street
Suite 1800
Chicago, IL 60606
PH: 312.707.8772
FAX: 312.707.8804

INFRASTRUCTURE ENGINEERING | INCORPORATED

USER NAME = DLamb	DESIGNED - CLL	REVISED -	
	CHECKED - SPK	REVISED -	
PLOT SCALE = 0.1667 ' / in.	DRAWN - CLL	REVISED -	
PLOT DATE = 6/6/2023	CHECKED - SPK	REVISED -	

STATE OF ILLINOIS
DEPARTMENT OF TRANSPORTATION

TOP OF NORTH APPROACH SLAB ELEVATIONS
STRUCTURE NO. 090-0183

SHEET S2-9 OF S2-47 SHEETS

F.A.P. RTE.	SECTION	COUNTY	TOTAL SHEETS	SHEET NO.
VAR.	13 (HVB, HB-3) BR-1;R	TAZEWELL	1173	729
		CONTRACT NO. 68C55		
		ILLINOIS	FED. AID PROJECT	

EAST EDGE OF SHOULDER

Location	Station	Offset	Theoretical Grade Elevations	Theoretical Grade Elevations Adjusted For Grinding
N. End S. Appr. Slab	84+94.66	-27.00	509.11	509.13
A2	85+03.85	-27.00	508.97	508.99
A3	85+13.05	-27.00	508.81	508.83
S. End S. Appr. Slab	85+22.24	-27.00	508.65	508.67

EAST EDGE OF PAVEMENT

Location	Station	Offset	Theoretical Grade Elevations	Theoretical Grade Elevations Adjusted For Grinding
N. End S. Appr. Slab	84+96.45	-19.00	508.60	508.62
A2	85+05.87	-19.00	508.45	508.47
A3	85+15.29	-19.00	508.29	508.31
S. End S. Appr. Slab	85+24.71	-19.00	508.12	508.14

℄ CEDAR ST. & PG

Location	Station	Offset	Theoretical Grade Elevations	Theoretical Grade Elevations Adjusted For Grinding
N. End S. Appr. Slab	85+01.10	0.00	507.39	507.41
A2	85+11.10	0.00	507.23	507.25
A3	85+21.10	0.00	507.05	507.07
S. End S. Appr. Slab	85+31.10	0.00	506.86	506.88

WEST EDGE OF PAVEMENT

Location	Station	Offset	Theoretical Grade Elevations	Theoretical Grade Elevations Adjusted For Grinding
N. End S. Appr. Slab	85+06.37	19.00	506.16	506.18
A2	85+17.03	19.00	505.98	506.00
A3	85+27.68	19.00	505.79	505.81
S. End S. Appr. Slab	85+38.39	19.00	505.57	505.59

WEST EDGE OF SHOULDER

Location	Station	Offset	Theoretical Grade Elevations	Theoretical Grade Elevations Adjusted For Grinding
N. End S. Appr. Slab	85+08.82	27.00	505.64	505.66
A2	85+19.78	27.00	505.45	505.47
A3	85+30.74	27.00	505.25	505.27
S. End S. Appr. Slab	85+41.78	27.00	505.02	505.04

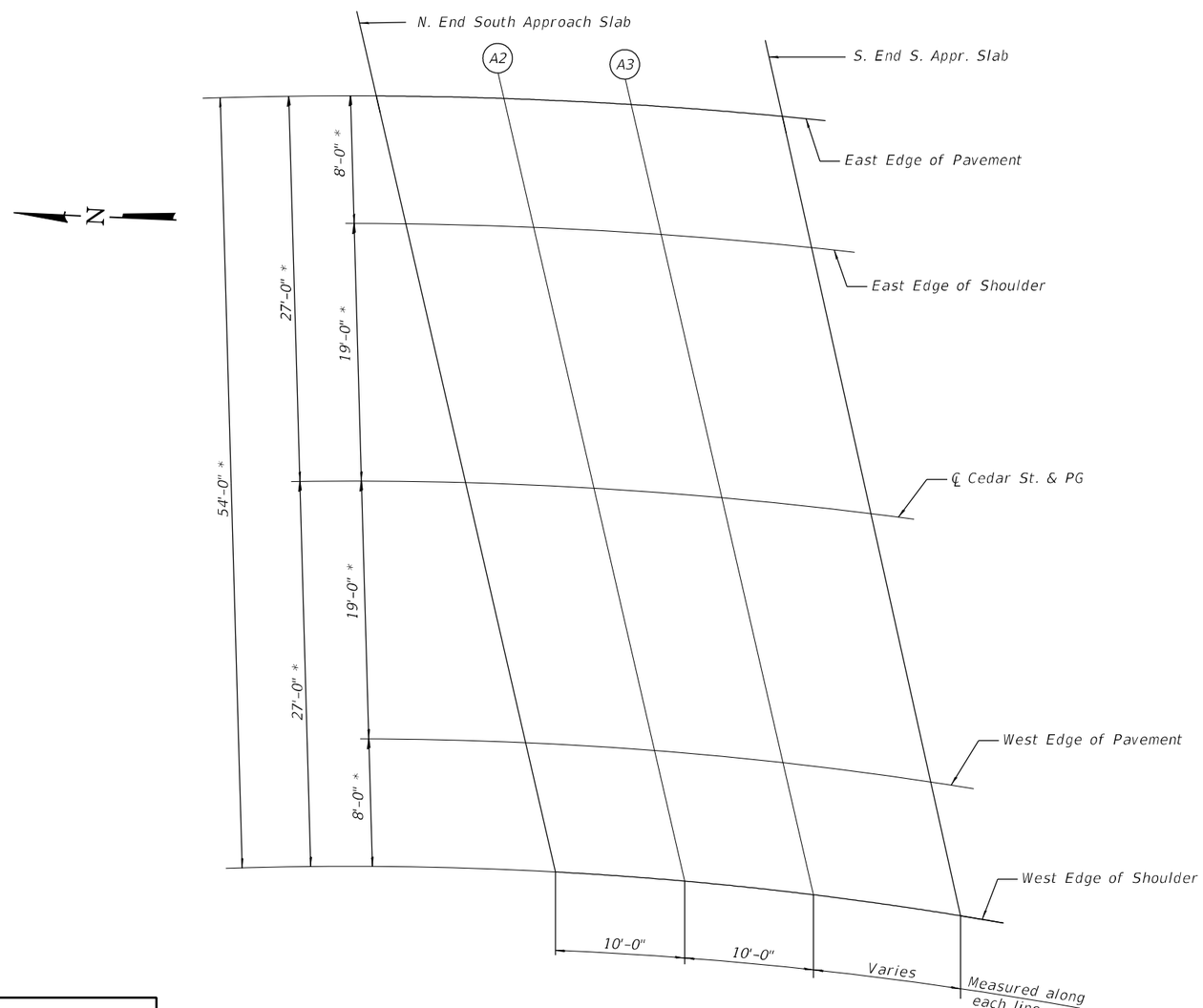

PLAN

* Radial Dimension

Michael Baker INTERNATIONAL
200 W Adams Street
Suite 1800
Chicago, IL 60606
PH: 312.707.8772
FAX: 312.707.8804

INFRASTRUCTURE ENGINEERING | INCORPORATED

USER NAME = DLamb	DESIGNED - CLL	REVISED -
	CHECKED - SPK	REVISED -
PLOT SCALE = 0.1667 ' / in.	DRAWN - CLL	REVISED -
PLOT DATE = 6/6/2023	CHECKED - SPK	REVISED -

STATE OF ILLINOIS
DEPARTMENT OF TRANSPORTATION

TOP OF SOUTH APPROACH SLAB ELEVATIONS
STRUCTURE NO. 090-0183

SHEET S2-10 OF S2-47 SHEETS

F.A.P. RTE.	SECTION	COUNTY	TOTAL SHEETS	SHEET NO.
VAR.	13 (HVB, HB-3) BR-1:R	TAZEWELL	1173	730
		CONTRACT NO. 68C55		
	ILLINOIS	FED. AID PROJECT		

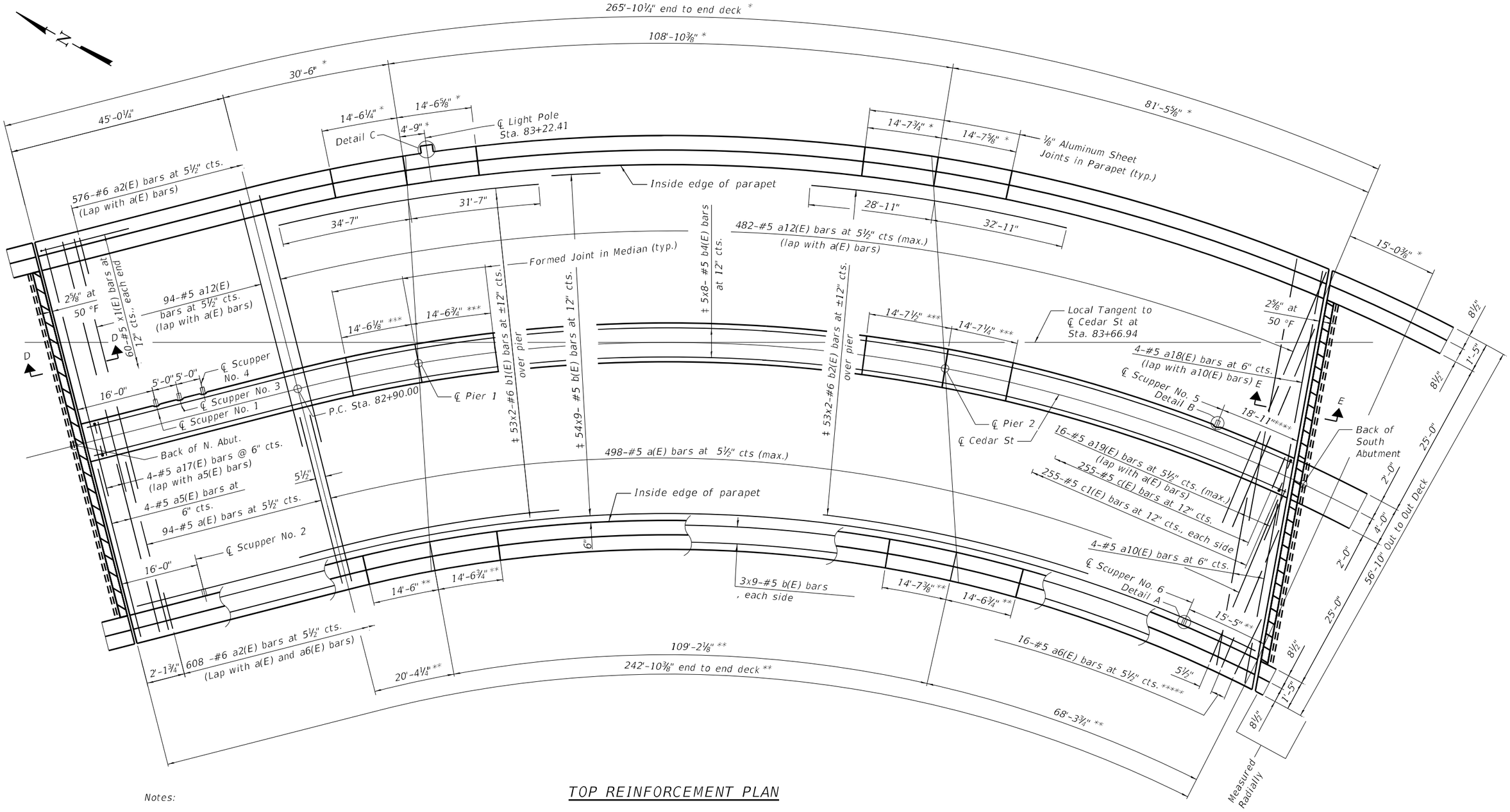

TOP REINFORCEMENT PLAN

Notes:

See sheet S2-12 for reinforcement bars in bottom of deck.

See sheet S2-13 for Deck Cross Section.

See sheet S2-14 for Parapets.

See sheet S2-15 for Section D-D and Section E-E.

See sheet S2-16 for Details A, B, and C, light pole details, reinforcement bar bending details, and Bill of Material.

Bars indicated thus 20 x 3-#5 etc. indicates 20 lines of bars with 3 lengths per line.

MINIMUM BAR LAP

#5 bar = 3'-6"
#6 bar = 3'-7"

* Measured along inside edge of east parapet
** Measured along inside edge of west parapet
*** Measured along ℄ Cedar St
**** Measured along east edge of median
***** See field cutting diagram on sheet S2-16
‡ Bars are to be provided straight and are to be sprung and tied at required radius in field

Michael Baker INTERNATIONAL
200 W Adams Street
Suite 1800
Chicago, IL 60606
P-t: 312.707.8770
FAX: 312.707.8804

INFRASTRUCTURE ENGINEERING | INCORPORATED

USER NAME = DLamb	DESIGNED - SPK	REVISED -	
	CHECKED - PK	REVISED -	
PLOT SCALE = 19:11.9990 ':" / in.	DRAWN - CLL	REVISED -	
PLOT DATE = 6/6/2023	CHECKED - PK	REVISED -	

STATE OF ILLINOIS
DEPARTMENT OF TRANSPORTATION

DECK TOP REINFORCEMENT
STRUCTURE NO. 090-0183

SHEET S2-11 OF S2-47 SHEETS

F.A.P. RTE.	SECTION	COUNTY	TOTAL SHEETS	SHEET NO.
VAR.	13 (HVB, HB-3) BR-1;R	TAZEWELL	1173	731
		CONTRACT NO. 68C55		
	ILLINOIS	FED. AID PROJECT		

MODEL: Default
FILE NAME: pw:\\mis-uscpw.bentley.com:mis-uscpw-03\Documents\Chicago IL\01 Projects\179740 IDOT Ceda\SHxt PRH5.0 CADD\CAD Sheets\Main St. Bridge Sheets\0090183-68C55-011-DeckRbnTop.dgn

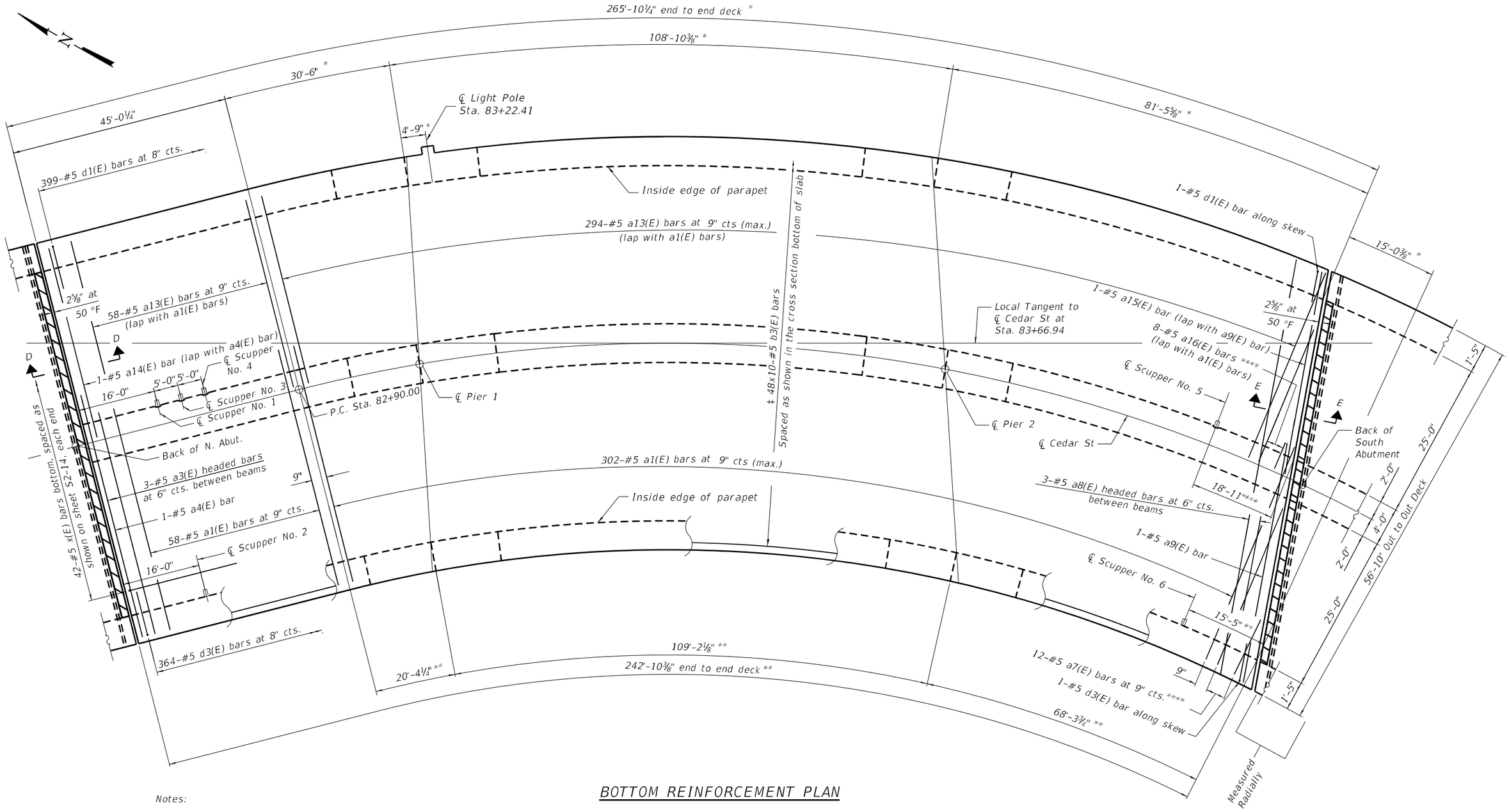

BOTTOM REINFORCEMENT PLAN

Notes:

See sheet S2-11 for reinforcement bars in top of deck.

See sheet S2-13 for Deck Cross Section.

See sheet S2-14 for Parapets.

See sheet S2-15 for Section D-D and Section E-E.

See sheet S2-16 for reinforcement bar bending details and Bill of Material.

Bars indicated thus 20 x 3-#5 etc. indicates 20 lines of bars with 3 lengths per line.

MINIMUM BAR LAP

#5 bar = 3'-6"
#6 bar = 3'-7"

* Measured along inside edge of east parapet
** Measured along inside edge of west parapet
*** Measured along east edge of median
**** See field cutting diagram on sheet S2-16
‡ Bars are to be provided straight and are to be sprung and tied at required radius in field

Michael Baker INTERNATIONAL
200 W Adams Street
Suite 1800
Chicago, IL 60606
P: 312.707.8770
FAX: 312.707.8804

INFRASTRUCTURE ENGINEERING | INCORPORATED

USER NAME = DLamb	DESIGNED - SPK	REVISED -	
	CHECKED - PK	REVISED -	
PLOT SCALE = 19:11.9990 ':" / in.	DRAWN - CLL	REVISED -	
PLOT DATE = 6/6/2023	CHECKED - PK	REVISED -	

STATE OF ILLINOIS
DEPARTMENT OF TRANSPORTATION

DECK BOTTOM REINFORCEMENT
STRUCTURE NO. 090-0183

SHEET S2-12 OF S2-47 SHEETS

F.A.P. RTE.	SECTION	COUNTY	TOTAL SHEETS	SHEET NO.
VAR.	13 (HVB, HB-3) BR-1;R	TAZEWELL	1173	732
		CONTRACT NO. 68C55		
		ILLINOIS	FED. AID PROJECT	

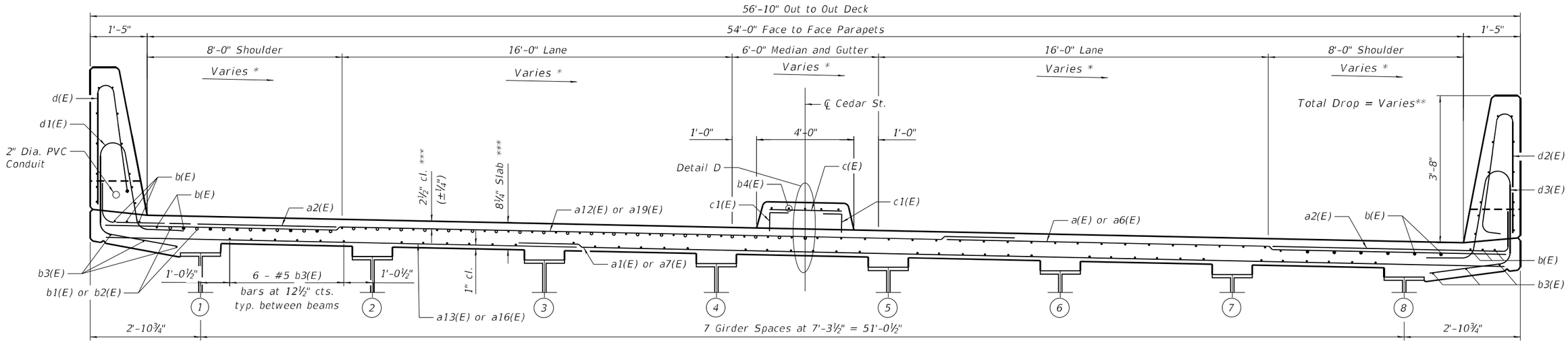

NEAR PIER

CROSS SECTION

(Looking South)

NEAR MIDSPAN

* Slope varies from 3.24% at North End to 6.00% at Station 83+24.66.
Slope is 6.00% from Station 83+24.66 to South End.

** Total drop varies from 1'-9" at North End to 3'-2⅞" at Station 83+24.66.
Total drop is 3'-2⅞" from Station 83+24.66 to South End.

*** Prior to grinding

**** The cost of expansion anchors/inserts is included in the cost of Reinforcement Bars, Epoxy Coated.

***** Full width along joint- backer rod not required.

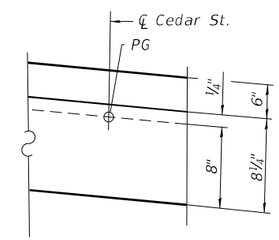

DETAIL D

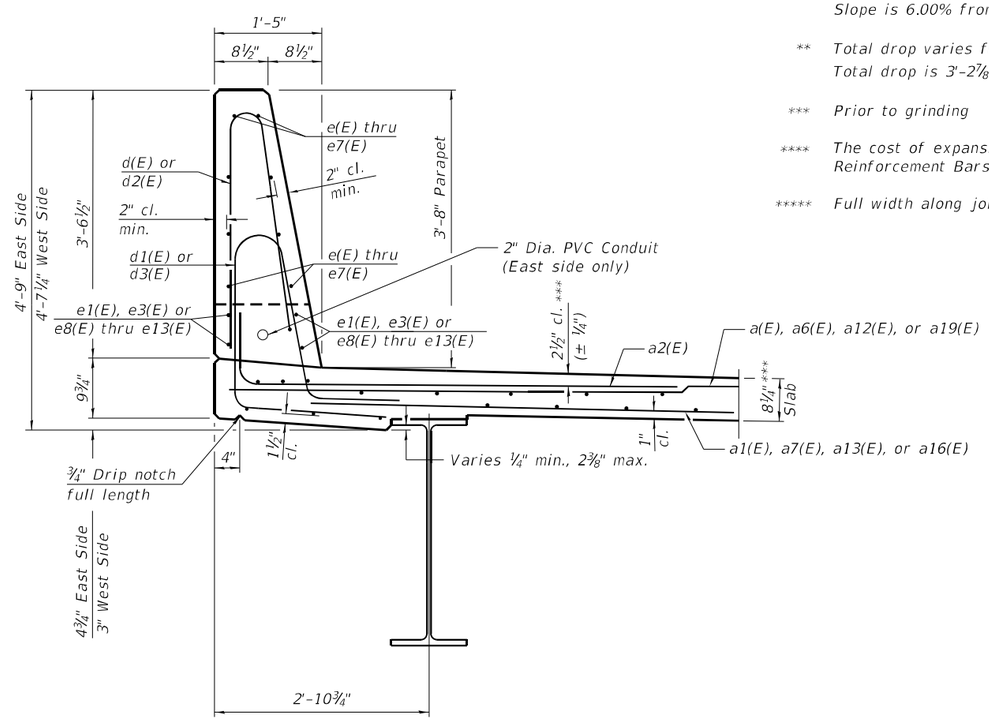

SECTION THRU PARAPET

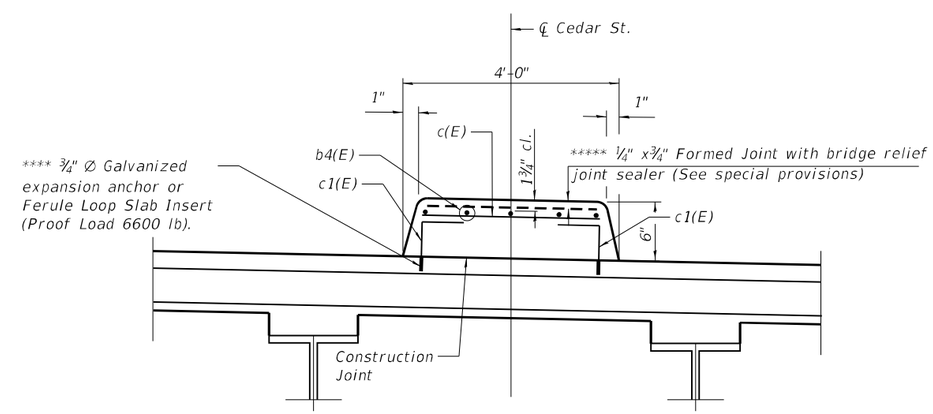

MEDIAN DETAIL

Michael Baker INTERNATIONAL
200 W Adams Street
Suite 1800
Chicago, IL 60606
P:+1 312.707.8770
FAX: 312.707.8804

INFRASTRUCTURE ENGINEERING | INCORPORATED

USER NAME = DLamb	DESIGNED - SPK	REVISED -	
	CHECKED - PK	REVISED -	
PLOT SCALE = 19:11.9990 ':" / in.	DRAWN - CLL	REVISED -	
PLOT DATE = 6/6/2023	CHECKED - SPK	REVISED -	

STATE OF ILLINOIS
DEPARTMENT OF TRANSPORTATION

DECK CROSS-SECTION
STRUCTURE NO. 090-0183

SHEET S2-13 OF S2-47 SHEETS

F.A.P. RTE.	SECTION	COUNTY	TOTAL SHEETS	SHEET NO.
VAR.	13 (HVB, HB-3) BR-1:R	TAZEWELL	1173	733
		CONTRACT NO. 68C55		
		ILLINOIS	FED. AID PROJECT	

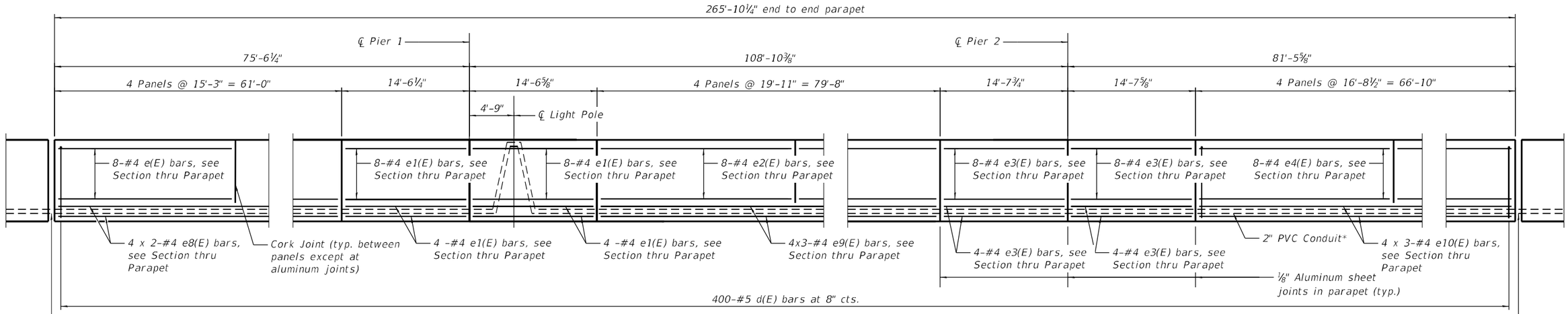

INSIDE ELEVATION OF EAST PARAPET

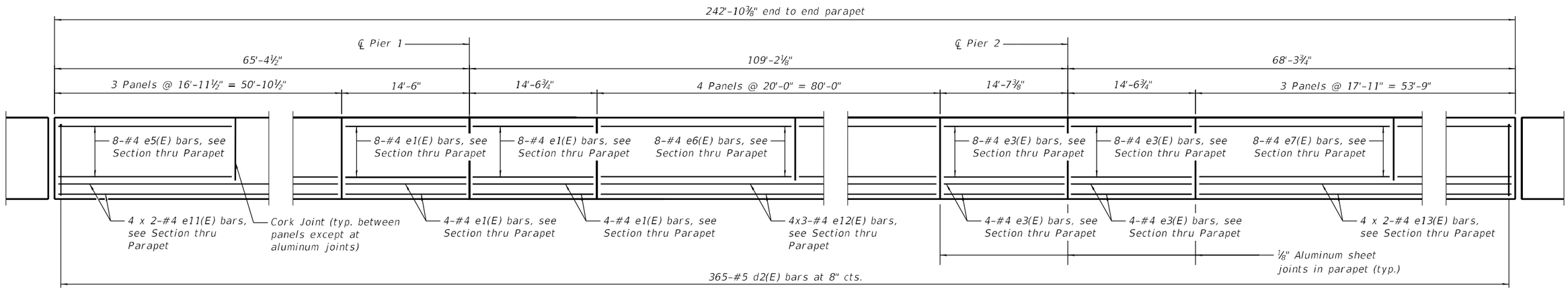

INSIDE ELEVATION OF WEST PARAPET

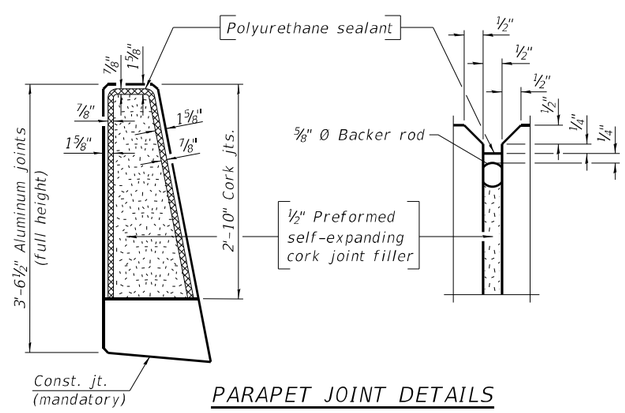

PARAPET JOINT DETAILS

MINIMUM BAR LAP

#4 bar = 2'-5"

Notes:

For Light Pole Mounted on Concrete Parapet Detail and Bill of Material see sheet S2-16.

All horizontal dimensions are measured along the inside edge of the parapet.

The Polyurethane Sealant shall be according to Article 1050.04 of the Std. Spec. and the color shall be gray.

The ⅛" aluminum sheet shall be ASTM B209 alloy 3003-H14 and coated to minimize reaction with wet concrete. Cost included with Concrete Superstructure.

Longitudinal bars are to be provided straight and are to be sprung and tied at required radius in field.

* For Pay Item See Electrical Drawings.

Michael Baker INTERNATIONAL
200 W Adams Street
Suite 1800
Chicago, IL 60606
PH: 312.707.8770
FAX: 312.707.8804

INFRASTRUCTURE ENGINEERING | INCORPORATED

USER NAME = DLamb	DESIGNED - SPK	REVISED -	
	CHECKED - PK	REVISED -	
PLOT SCALE = 0.1667 ' / in.	DRAWN - MD	REVISED -	
PLOT DATE = 6/6/2023	CHECKED - SPK	REVISED -	

STATE OF ILLINOIS
DEPARTMENT OF TRANSPORTATION

PARAPET ELEVATION
STRUCTURE NO. 090-0183

SHEET S2-14 OF S2-47 SHEETS

F.A.P. RTE.	SECTION	COUNTY	TOTAL SHEETS	SHEET NO.
VAR.	13 (HVB, HB-3) BR-1;R	TAZEWELL	1173	734
		CONTRACT NO. 68C55		
		ILLINOIS	FED. AID PROJECT	

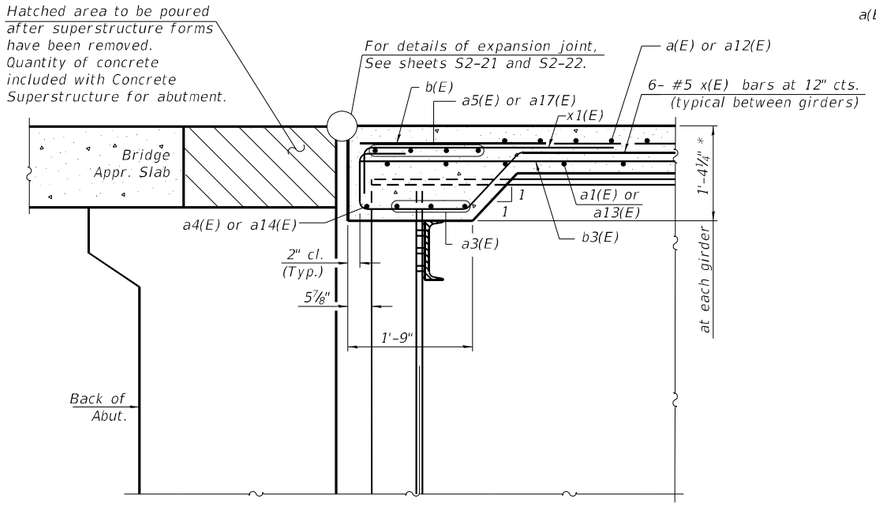

SECTION D-D

(at Rt. ∠'s)
(Full cross frame not shown for clarity)

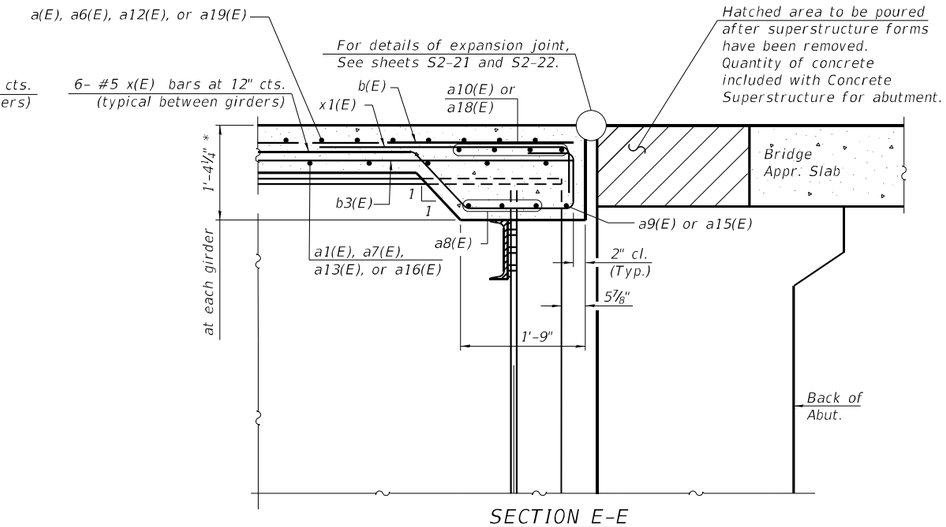

SECTION E-E

(at Rt. ∠'s)
(Full cross frame not shown for clarity)

Notes:

See sheet S2-16 for superstructure details and Bill of Material.

The x(E) and x1(E) bars shall be placed parallel to the girders. Spacing for these bars shall be at right angles to the girders.

* Prior to grinding

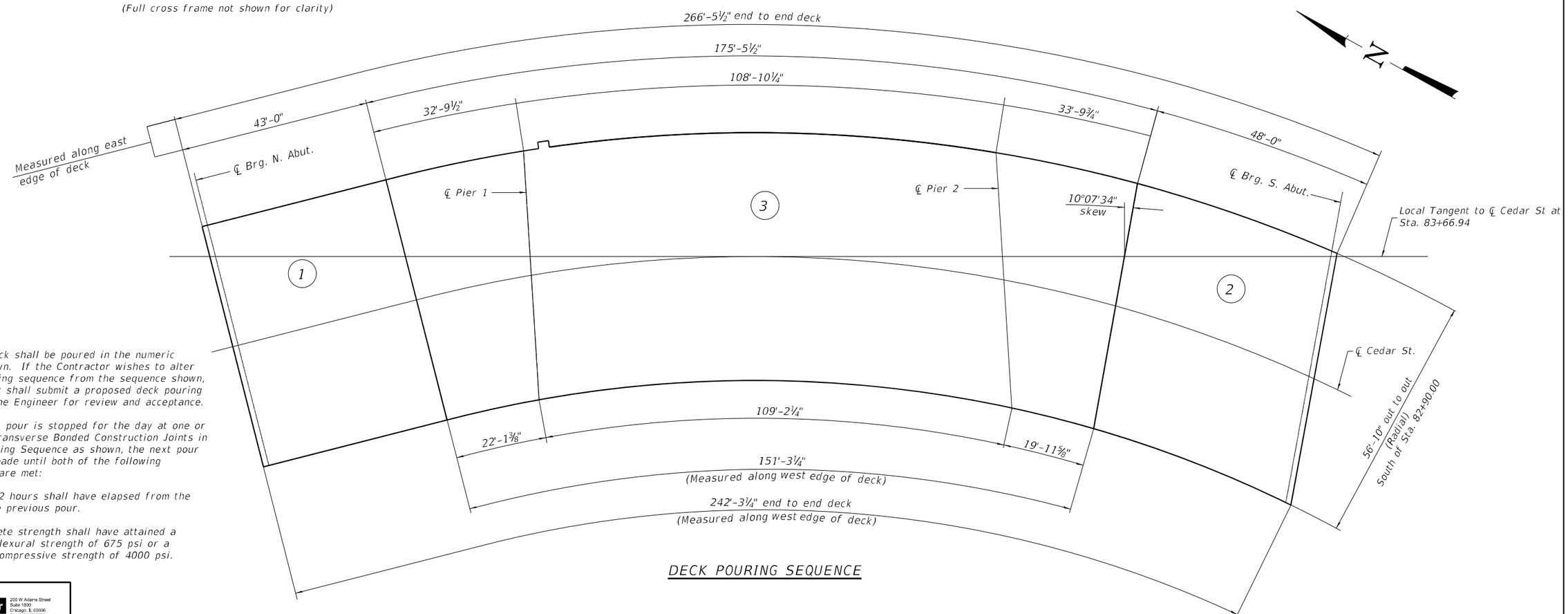

DECK POURING SEQUENCE

Notes:

The bridge deck shall be poured in the numeric sequence shown. If the Contractor wishes to alter the deck pouring sequence from the sequence shown, the Contractor shall submit a proposed deck pouring sequence to the Engineer for review and acceptance.

When the deck pour is stopped for the day at one or more of the transverse Bonded Construction Joints in the Deck Pouring Sequence as shown, the next pour shall not be made until both of the following requirements are met:

1. At least 72 hours shall have elapsed from the end of the previous pour.
2. The concrete strength shall have attained a minimum flexural strength of 675 psi or a minimum compressive strength of 4000 psi.

Michael Baker INTERNATIONAL
200 W Adams Street
Suite 1800
Chicago, IL 60606
PH: 312.707.8772
FAX: 312.707.8804

INFRASTRUCTURE ENGINEERING | INCORPORATED

USER NAME = DLamb	DESIGNED - SPK	REVISED -	
	CHECKED - PK	REVISED -	
PLOT SCALE = 0.1667 ' / in.	DRAWN - CLL	REVISED -	
PLOT DATE = 6/6/2023	CHECKED - SPK	REVISED -	

STATE OF ILLINOIS
DEPARTMENT OF TRANSPORTATION

SUPERSTRUCTURE SECTIONS & DECK POURING SEQUENCE
STRUCTURE NO. 090-0183

SHEET S2-15 OF S2-47 SHEETS

F.A.P. RTE.	SECTION	COUNTY	TOTAL SHEETS	SHEET NO.
VAR.	13 (HVB, HB-3) BR-1;R	TAZEWELL	1173	735
		CONTRACT NO. 68C55		
	ILLINOIS	FED. AID PROJECT		

Notes:

Headed bars shall conform to ASTM A970 with threaded attachment; Class HA; and reinforcement bars conforming to ASTM A706. Cost included with Reinforcement Bars, Epoxy Coated.

Cost of anchor rods is included with Concrete Superstructure.

Cut longitudinal reinforcement to clear drainage scuppers.

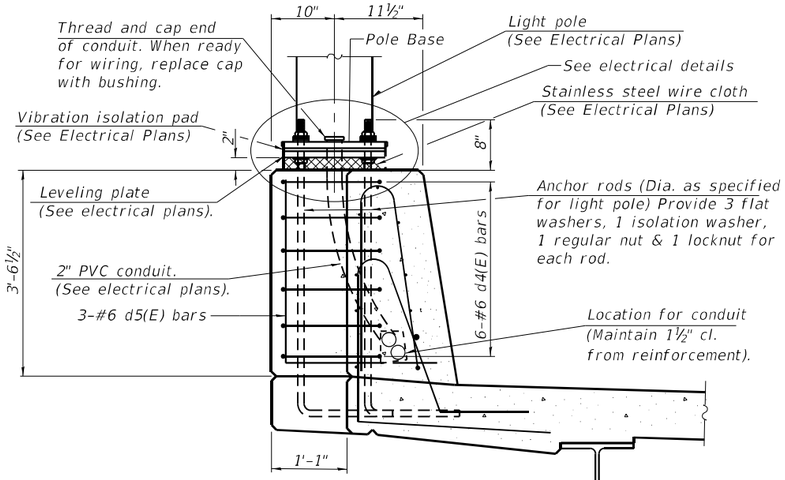

SECTION D-D

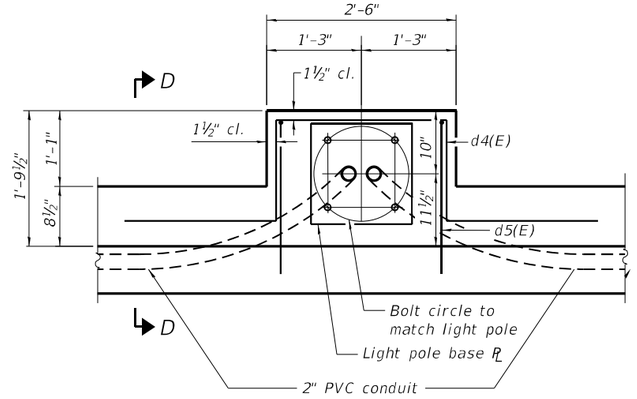

DETAIL C

LIGHT POLE MOUNTED ON CONCRETE PARAPET

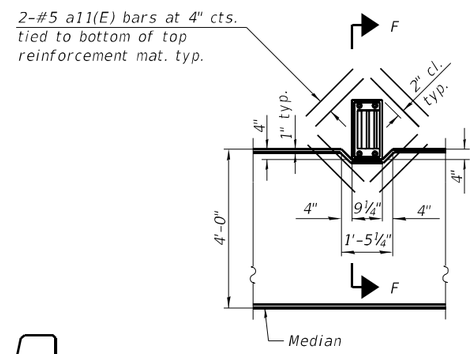

DETAIL B

Typical for scuppers along the median

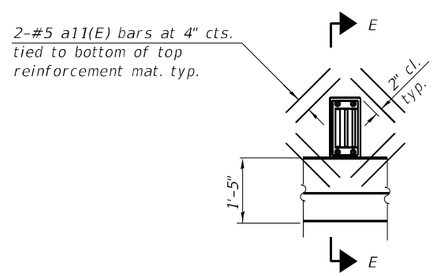

DETAIL A

Typical for scuppers along the parapet

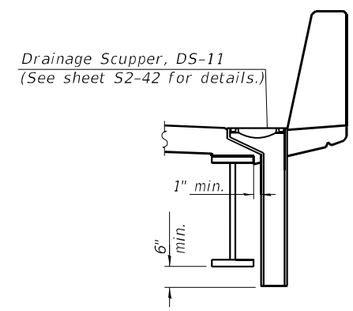

SECTION E-E

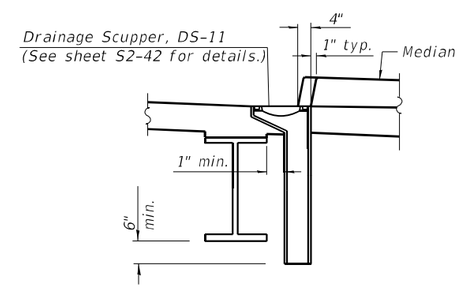

SECTION F-F

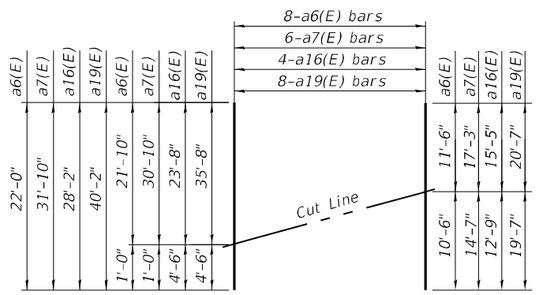

FIELD CUTTING DIAGRAM

Order a6(E), a7(E), a16(E), and a19(E) bars full length.
Cut to fit as shown and place at one end of the dimension line shown on the plan.
Place remainder of bars at the opposite end of the dimension line.

SUPERSTRUCTURE BILL OF MATERIAL

Bar	No.	Size	Length	Shape
a(E)	592	#5	22'-9"	
a1(E)	360	#5	33'-8"	
a2(E)	1,184	#6	8'-4"	
a3(E)	21	#5	6'-11"	
a4(E)	1	#5	33'-8"	
a5(E)	4	#5	22'-9"	
a6(E)	8	#5	22'-0"	
a7(E)	6	#5	31'-10"	
a8(E)	21	#5	7'-1"	
a9(E)	1	#5	34'-7"	
a10(E)	4	#5	23'-4"	
a11(E)	48	#5	1'-6"	
a12(E)	576	#5	37'-4"	
a13(E)	352	#5	26'-5"	
a14(E)	1	#5	26'-5"	
a15(E)	1	#5	27'-1"	
a16(E)	4	#5	28'-2"	
a17(E)	4	#5	37'-4"	
a18(E)	4	#5	38'-4"	
a19(E)	8	#5	40'-2"	
b(E)	540	#5	32'-8"	
b1(E)	106	#6	34'-11"	
b2(E)	106	#6	32'-9"	
b3(E)	480	#5	29'-9"	
b4(E)	40	#5	34'-11"	
c(E)	255	#5	3'-6"	
c1(E)	510	#5	1'-3"	
d(E)	400	#5	7'-0"	
d1(E)	400	#5	8'-0"	
d2(E)	365	#5	7'-0"	
d3(E)	365	#5	8'-0"	
d4(E)	6	#6	8'-11"	
d5(E)	3	#6	5'-3"	
e(E)	32	#4	14'-11"	
e1(E)	48	#4	14'-3"	
e2(E)	32	#4	19'-7"	
e3(E)	48	#4	14'-3"	
e4(E)	32	#4	16'-5"	
e5(E)	24	#4	16'-8"	
e6(E)	32	#4	19'-8"	
e7(E)	24	#4	17'-5"	
e8(E)	8	#4	31'-7"	
e9(E)	12	#4	28'-1"	
e10(E)	12	#4	23'-10"	
e11(E)	8	#4	26'-6"	
e12(E)	12	#4	28'-2"	
e13(E)	8	#4	27'-11"	
x(E)	84	#5	6'-5"	
x1(E)	120	#5	4'-4"	
Concrete Superstructure			Cu. Yd.	491.3
Protective Coat			Sq. Yd.	1,806
Reinforcement Bars, Epoxy Coated			Pound	139,860
Diamond Grinding (Bridge Section)			Sq. Yd.	1,187
Bridge Deck Grooving (Longitudinal)			Sq. Yd.	904

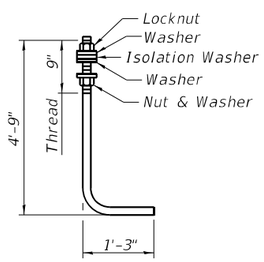

ANCHOR ROD

Diameter as specified for light poles. (ASTM F 1554 Grade 105) full length hot dipped galvanized

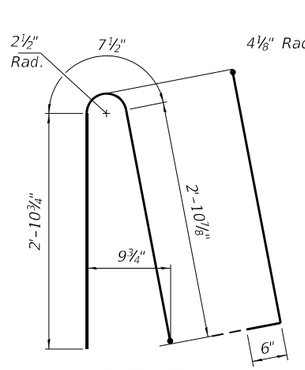

BAR d(E)

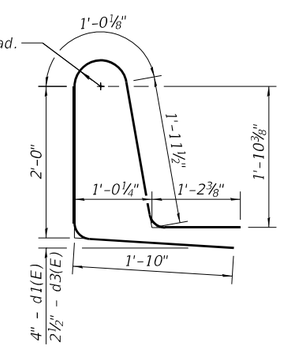

BARS d1(E) & d3(E)

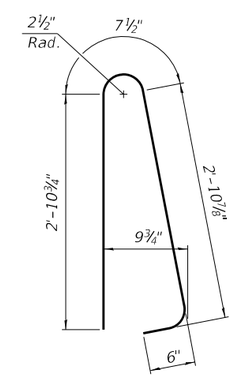

BAR d2(E)

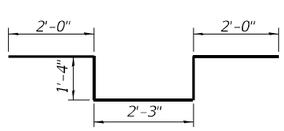

BAR d4(E)

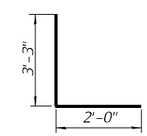

BAR d5(E)

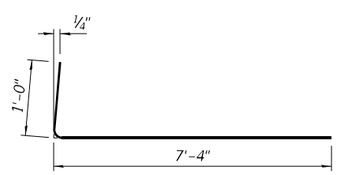

BAR a2(E)

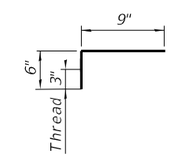

BAR c1(E)

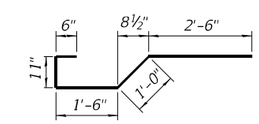

BAR x(E)

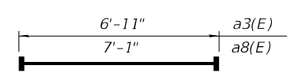

BARS a3(E) & a8(E)

(Headed)

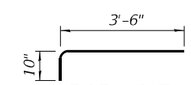

BAR x1(E)

Michael Baker INTERNATIONAL
200 W Adams Street
Suite 1800
Chicago, IL 60606
PH: 312.707.8770
FAX: 312.707.8804

INFRASTRUCTURE ENGINEERING | INCORPORATED

USER NAME = DLamb	DESIGNED - SPK	REVISED -	
	CHECKED - PK	REVISED -	
PLOT SCALE = 0.1667 ' / in.	DRAWN - CLL	REVISED -	
PLOT DATE = 6/6/2023	CHECKED - SPK	REVISED -	

STATE OF ILLINOIS
DEPARTMENT OF TRANSPORTATION

SUPERSTRUCTURE DETAILS
STRUCTURE NO. 090-0183

SHEET S2-16 OF S2-47 SHEETS

F.A.P. RTE.	SECTION	COUNTY	TOTAL SHEETS	SHEET NO.
VAR.	13 (HVB, HB-3) BR-1;R	TAZEWELL	1173	736
		CONTRACT NO. 68C55		
	ILLINOIS	FED. AID PROJECT		

Notes:

For Section A-A and Bill of Materials see sheet S2-18.

Provide preformed joint filler (PJF) according to article 1051.09 of the Standard Specifications. Bond filler to wingwall with suitable adhesive as recommended by supplier. Cost included with Concrete Structures.

* Prior to grinding

** The cost of expansion anchors/inserts is included in the cost of Reinforcement Bars, Epoxy Coated.

*** Slope varies from 2.36% at north end of slab to 3.18% at south end of slab.

**** Total drop varies from 1'-3¼" at Sta. 82+19.58 to 1'8⅝" at Sta. 82+43.26.

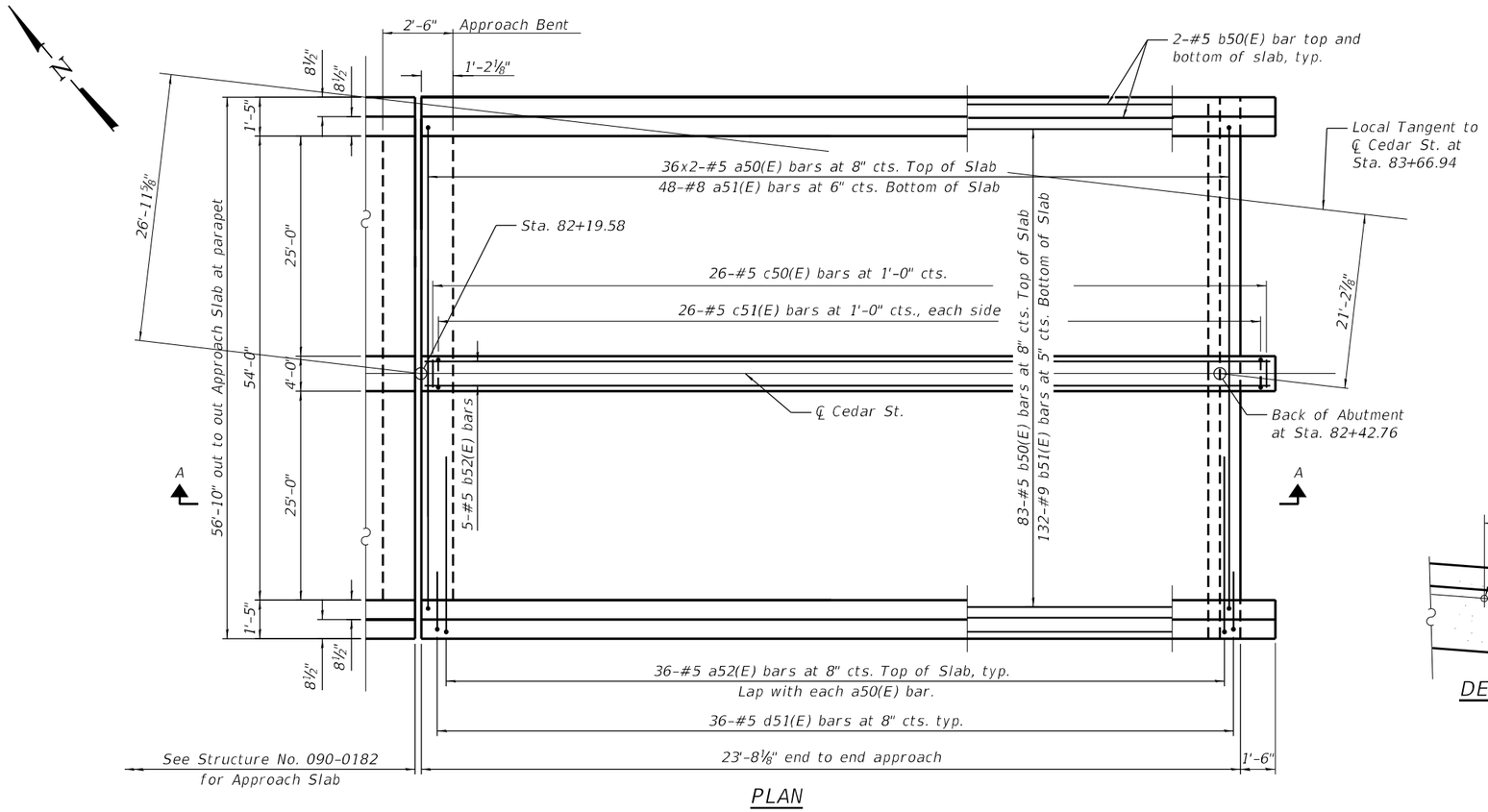

PLAN

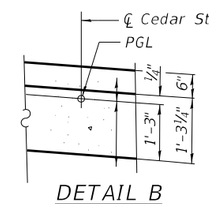

DETAIL B

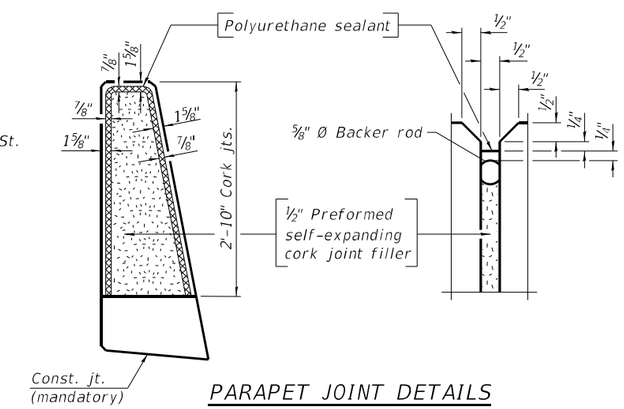

PARAPET JOINT DETAILS

The Polyurethane Sealant shall be according to Article 1050.04 of the Std. Spec. and the color shall be gray.

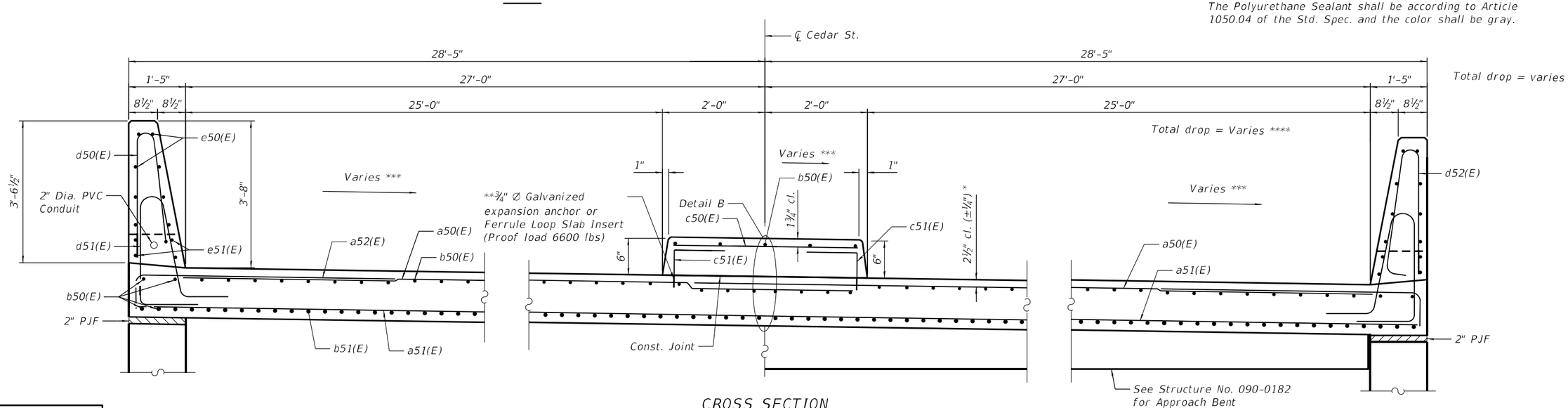

NEAR ABUTMENT

CROSS SECTION
(Looking South)

AT APPROACH BENT

Michael Baker INTERNATIONAL
200 W Adams Street
Suite 1800
Chicago, IL 60606
PH: 312.707.6970
FAX: 312.707.6804

INFRASTRUCTURE ENGINEERING | INCORPORATED

USER NAME = DLamb	DESIGNED - SPK	REVISED -	
	CHECKED - PK	REVISED -	
PLOT SCALE = 0.1667 ' / in.	DRAWN - CLL	REVISED -	
PLOT DATE = 6/6/2023	CHECKED - SPK	REVISED -	

STATE OF ILLINOIS
DEPARTMENT OF TRANSPORTATION

NORTH BRIDGE APPROACH SLAB PLAN & CROSS-SECTION
STRUCTURE NO. 090-0183

SHEET S2-17 OF S2-47 SHEETS

F.A.P. RTE.	SECTION	COUNTY	TOTAL SHEETS	SHEET NO.
VAR.	13 (HVB, HB-3) 8R-1:R	TAZEWELL	1173	737
		CONTRACT NO. 68C55		
	ILLINOIS	FED. AID PROJECT		

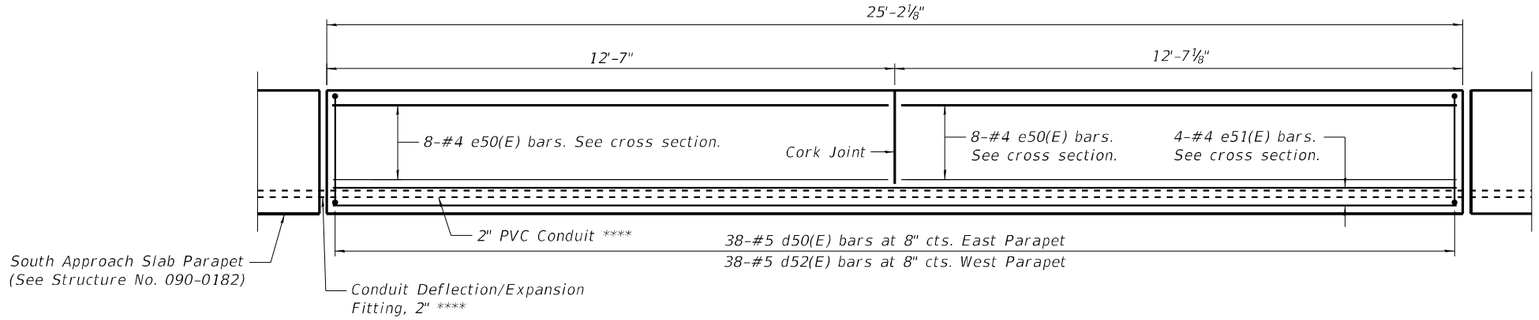

INSIDE ELEVATION OF PARAPET

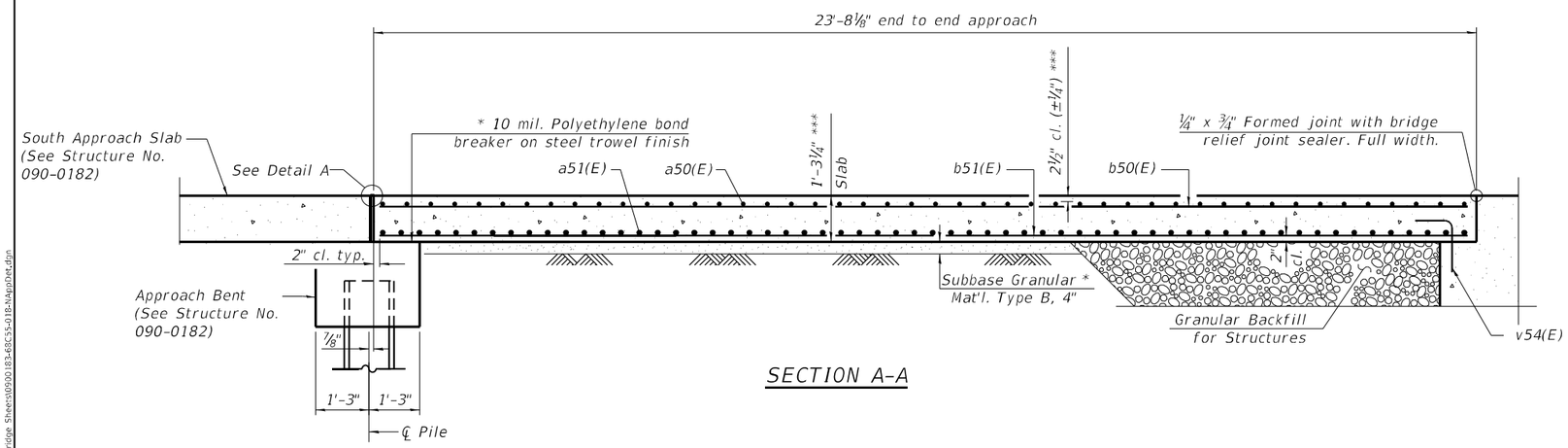

SECTION A-A

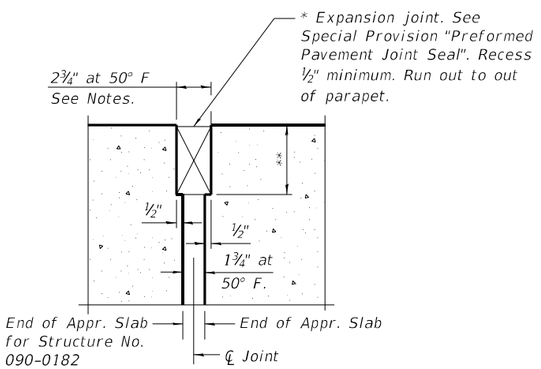

DETAIL A

* Cost included with Concrete Superstructure (Approach Slab).
** Per manufacturer recommendations
*** Prior to Grinding
**** East parapet only. For pay items see Electrical Drawings

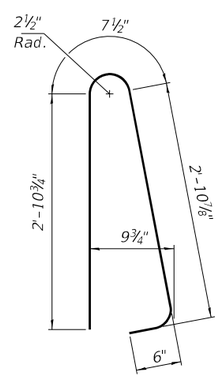

BAR d52(E)

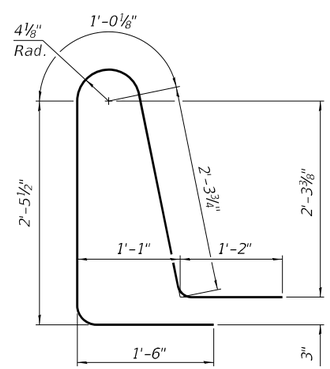

BAR d51(E)

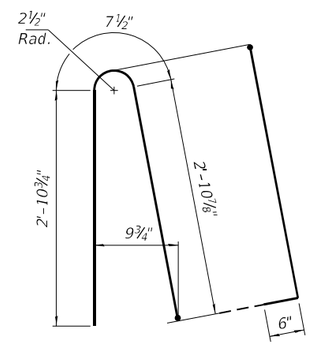

BAR d50(E)

Notes:

The joint opening shall be adjusted for temperature per Article 520.04 of the Standard Specifications. The length used to calculate the adjustment shall be equal to the length of both bridge approach slabs on the footing.

Parapet concrete shall be paid for as Concrete Superstructure.

Approach slab shall be paid for as Concrete Superstructure (Approach Slab).

The cost of the North Approach Bent is included with the cost of Structure No. 090-0182.

For Parapet Joint Detail see sheet S2-17.

For Granular Backfill for Structures and drainage treatment details, see sheet S2-3.

Bar V54(E) is included in the bill of material for the North Abutment. See sheet S2-33.

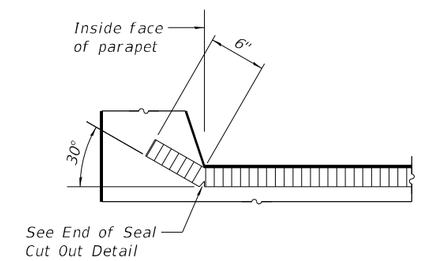

END OF SEAL

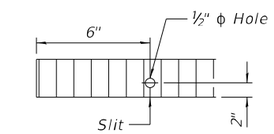

END OF SEAL CUT-OUT

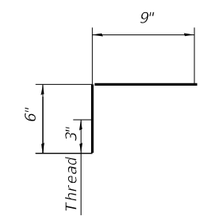

BAR c51(E)

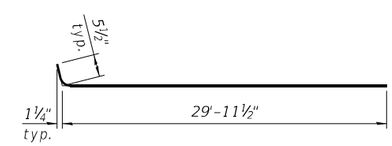

BAR a50(E)

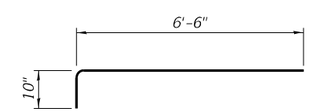

BAR a52(E)

NORTH APPROACH BILL OF MATERIAL

Bar	No.	Size	Length	Shape
a50(E)	72	#5	30'-5"	
a51(E)	48	#8	56'-6"	
a52(E)	72	#5	7'-4"	
b50(E)	91	#5	23'-4"	
b51(E)	132	#9	23'-4"	
b52(E)	5	#5	24'-10"	
c50(E)	26	#5	3'-6"	
c51(E)	52	#5	1'-3"	
d50(E)	38	#5	6'-11"	
d51(E)	72	#5	8'-6"	
d52(E)	38	#5	6'-11"	
e50(E)	32	#4	12'-3"	
e51(E)	8	#4	24'-10"	
Concrete Superstructure			Cu. Yd.	8.9
Protective Coat			Sq. Yd.	170
Concrete Superstructure (Approach Slab)			Cu. Yd.	63.5
Reinforcement Bars, Epoxy Coated			Pound	24,640
Diamond Grinding (Bridge Section)			Sq. Yd.	110
Bridge Deck Grooving (Longitudinal)			Sq. Yd.	84

Michael Baker INTERNATIONAL
200 W Adams Street
Suite 1800
Chicago, IL 60606
P:+1 312.707.8770
FAX: 312.707.8804

INFRASTRUCTURE ENGINEERING | INCORPORATED

USER NAME = DLamb	DESIGNED - SPK	REVISED -	
	CHECKED - PK	REVISED -	
PLOT SCALE = 0.1667 ' / in.	DRAWN - MD	REVISED -	
PLOT DATE = 6/6/2023	CHECKED - SPK	REVISED -	

STATE OF ILLINOIS
DEPARTMENT OF TRANSPORTATION

NORTH BRIDGE APPROACH SLAB DETAILS
STRUCTURE NO. 090-0183

SHEET S2-18 OF S2-47 SHEETS

F.A.P. RTE.	SECTION	COUNTY	TOTAL SHEETS	SHEET NO.
VAR.	13 (HVB, HB-3) BR-1;R	TAZEWELL	1173	738
		CONTRACT NO. 68C55		
		ILLINOIS FED. AID PROJECT		

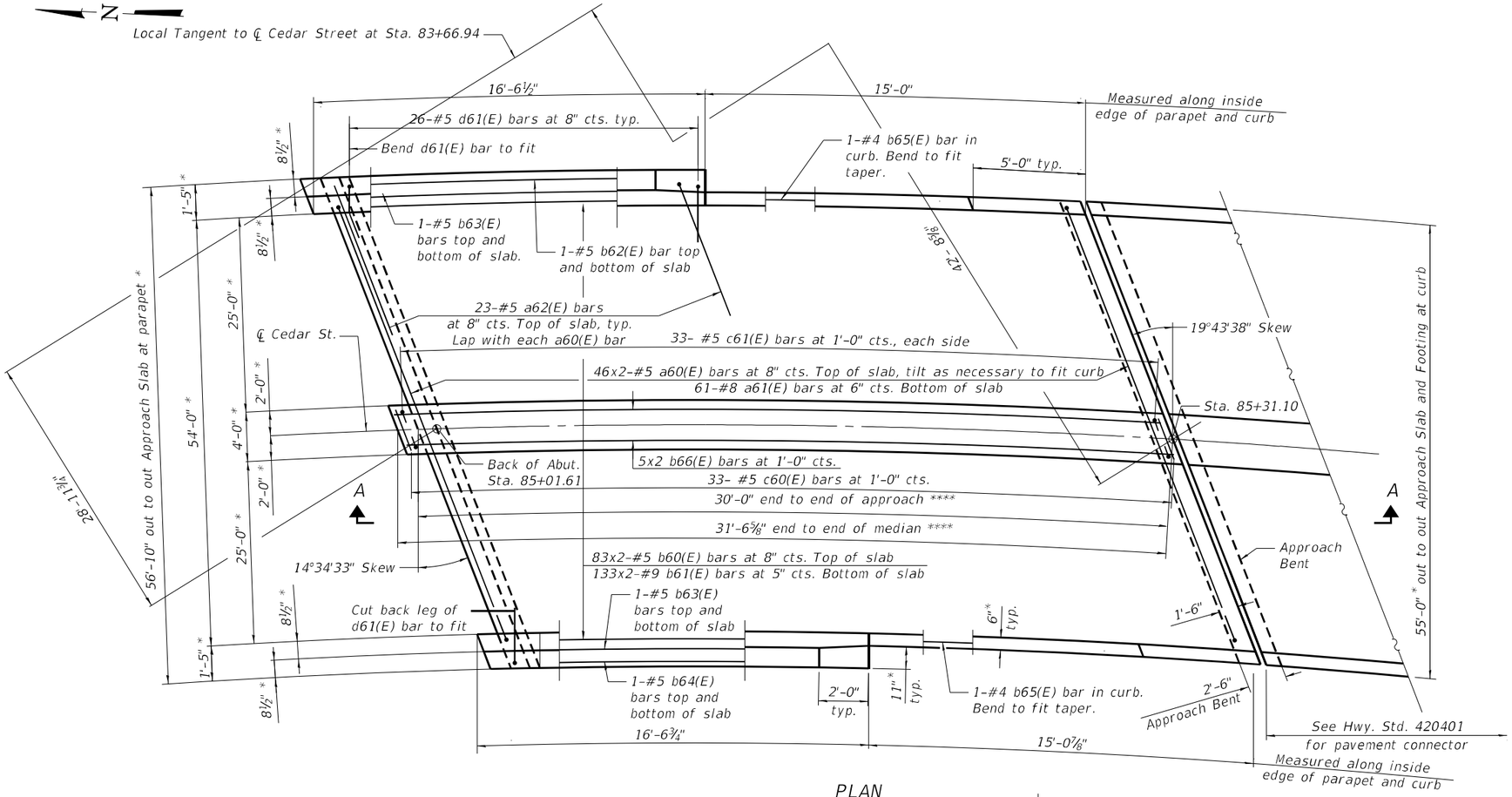

PLAN

Notes:

Provide preformed joint filler (PJF) according to Article 1051.09 of the Standard Specifications. Bond filler to wingwall with suitable adhesive as recommended by supplier. Cost included with Concrete Structures.

Skew angles are measured from a line normal to the tangent of the curve at the stations shown.

For Section A-A and Bill of Materials see sheet S2-20.

* Radial Dimension

** East Parapet

*** West Parapet

**** Measured along ℄ Cedar St.

***** Prior to grinding

****** Cost of expansion anchor/inserts is included in the cost of Reinforcement Bars, Epoxy Coated.

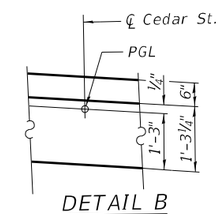

DETAIL B

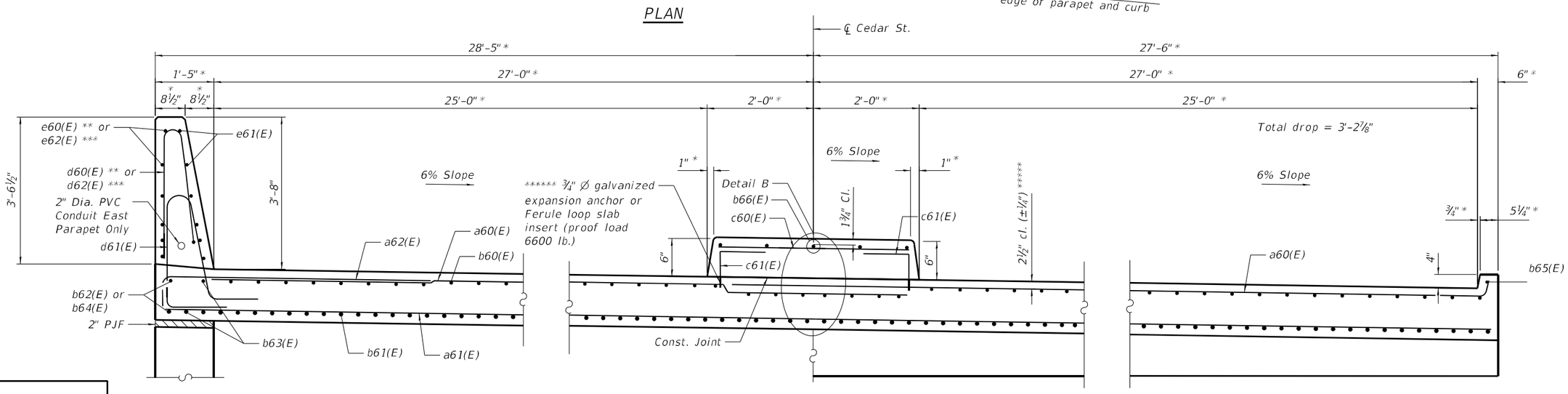

NEAR ABUTMENT

CROSS SECTION
(Looking South)

AT APPROACH BENT

Michael Baker INTERNATIONAL
200 W Adams Street
Suite 1800
Chicago, IL 60606
PH: 312.707.8772
FAX: 312.707.8804

INFRASTRUCTURE ENGINEERING | INCORPORATED

USER NAME = DLamb	DESIGNED - SPK	REVISED -	
	CHECKED - PK	REVISED -	
PLOT SCALE = 10.6666 ' / in.	DRAWN - CLL	REVISED -	
PLOT DATE = 6/6/2023	CHECKED - SPK	REVISED -	

STATE OF ILLINOIS
DEPARTMENT OF TRANSPORTATION

SOUTH BRIDGE APPROACH SLAB PLAN & CROSS-SECTION
STRUCTURE NO. 090-0183

SHEET S2-19 OF S2-47 SHEETS

F.A.P. RTE.	SECTION	COUNTY	TOTAL SHEETS	SHEET NO.
VAR.	13 (HVB, HB-3) BR-1:R	TAZEWELL	1173	739
		CONTRACT NO. 68C55		
	ILLINOIS	FED. AID PROJECT		

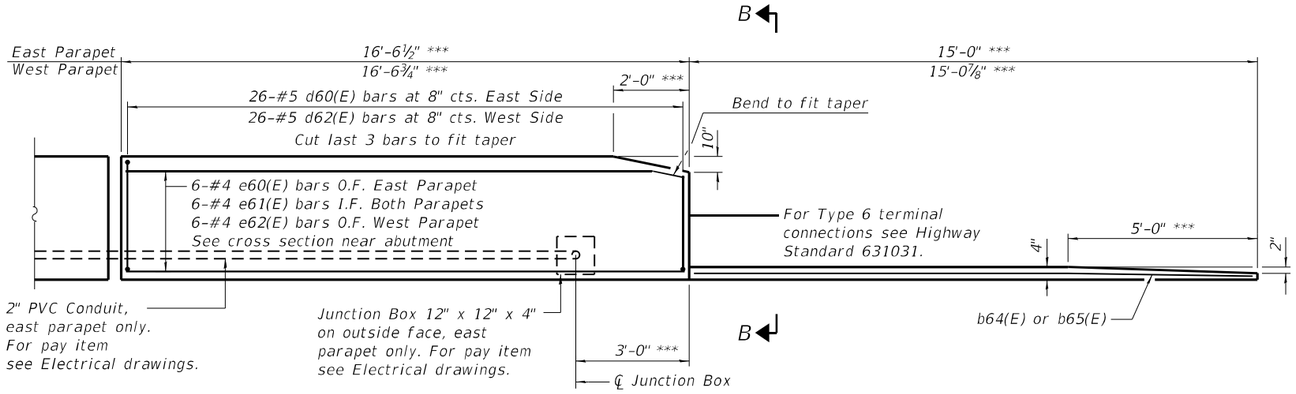

INSIDE ELEVATION OF PARAPET AND CURB

Notes:

The joint opening shall be adjusted for temperature per Article 520.04 of the Standard Specifications. The length used to calculate the adjustment shall be equal to the length of the bridge approach slab.

Parapet concrete shall be paid for as Concrete Superstructure.

Approach slab shall be paid for as Concrete Superstructure (Approach Slab).

For Granular Backfill for Structures and drainage treatment details, see sheet S2-3.

Bar v64(E) is included in the Bill of Material for the South Abutment. See sheet S2-36.

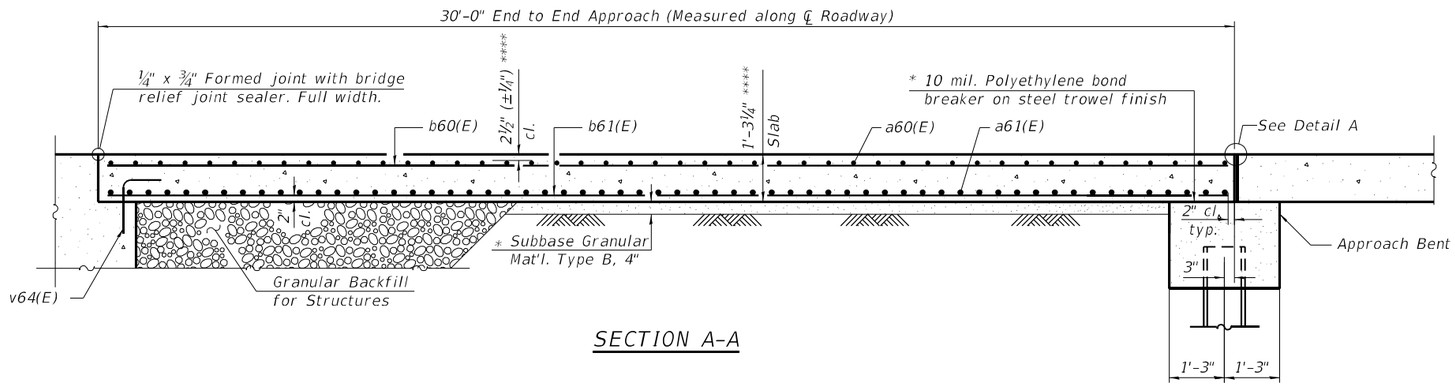

SECTION A-A

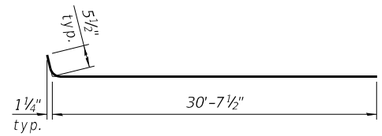

BAR a60(E)

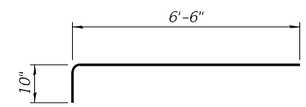

BAR a62(E)

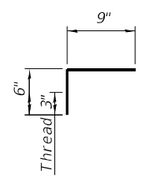

BAR c61(E)

SOUTH APPROACH
BILL OF MATERIAL

Bar	No.	Size	Length	Shape
a60(E)	92	#5	31'-1"	
a61(E)	61	#8	58'-1"	
a62(E)	46	#5	7'-4"	
b60(E)	166	#5	16'-6"	
b61(E)	266	#9	19'-2"	
b62(E)	2	#5	15'-0"	
b63(E)	4	#5	14'-8"	
b64(E)	2	#5	14'-4"	
b65(E)	2	#4	14'-8"	
b66(E)	10	#5	17'-4"	
c60(E)	33	#5	3'-6"	
c61(E)	66	#5	1'-3"	
d60(E)	26	#5	7'-0"	
d61(E)	52	#5	8'-6"	
d62(E)	26	#5	7'-0"	
e60(E)	6	#4	16'-6"	
e61(E)	12	#4	16'-3"	
e62(E)	6	#4	16'-0"	
Concrete Superstructure		Cu. Yd.	6.9	
Protective Coat		Sq. Yd.	203	
Concrete Superstructure (Approach Slab)		Cu. Yd.	83.4	
Reinforcement Bars, Epoxy Coated		Pound	34,620	
Diamond Grinding (Bridge Section)		Sq. Yd.	147	
Bridge Deck Grooving (Longitudinal)		Sq. Yd.	112	

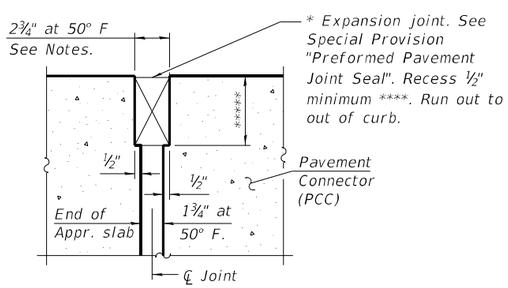

DETAIL A

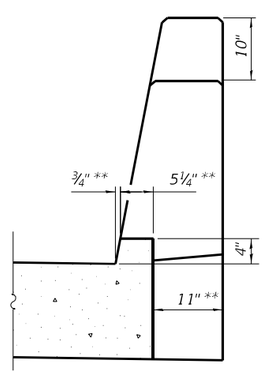

VIEW B-B

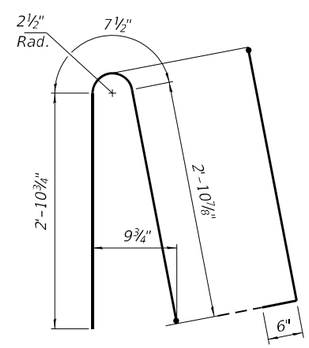

BAR d60(E)

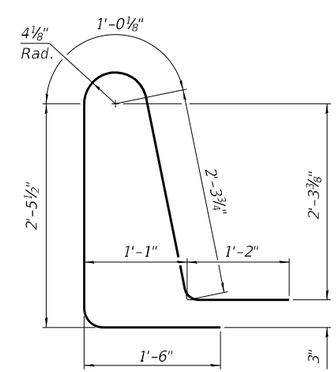

BAR d61(E)

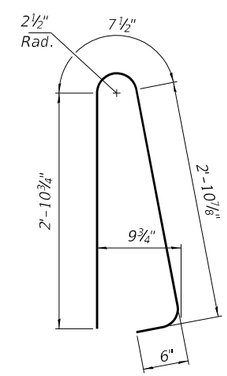

BAR d62(E)

* Cost included with Concrete Superstructure (Approach Slab).

** Radial

*** Measured along inside edge of parapet and curb

**** Prior to Grinding

***** Per manufacturer recommendations

Michael Baker INTERNATIONAL
200 W Adams Street
Suite 1800
Chicago, IL 60606
P:+1 312.707.8770
FAX: 312.707.8804

INFRASTRUCTURE ENGINEERING | INCORPORATED

USER NAME = DLamb	DESIGNED - SPK	REVISED -	
	CHECKED - PK	REVISED -	
PLOT SCALE = 0.1667 ' / in.	DRAWN - CLL	REVISED -	
PLOT DATE = 6/6/2023	CHECKED - SPK	REVISED -	

STATE OF ILLINOIS
DEPARTMENT OF TRANSPORTATION

SOUTH BRIDGE APPROACH SLAB DETAILS
STRUCTURE NO. 090-0183

SHEET S2-20 OF S2-47 SHEETS

F.A.P. RTE.	SECTION	COUNTY	TOTAL SHEETS	SHEET NO.
VAR.	13 (HVB, HB-3) BR-1:R	TAZEWELL	1173	740
		CONTRACT NO. 68C55		
	ILLINOIS	FED. AID PROJECT		

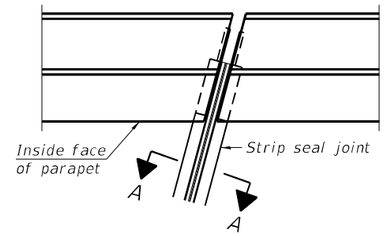

FOR SKEWS ≤ 30°

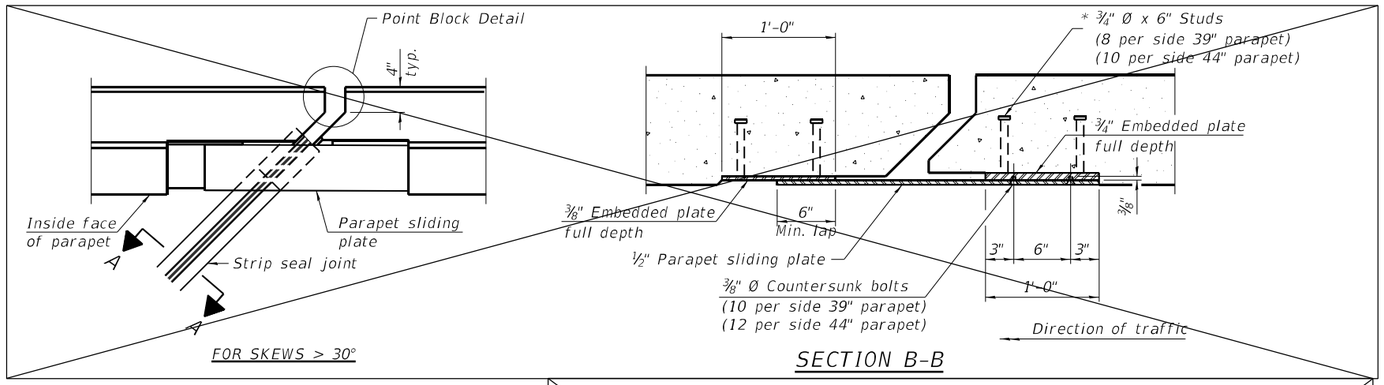

FOR SKEWS > 30°

SECTION B-B

PLAN AT PARAPET

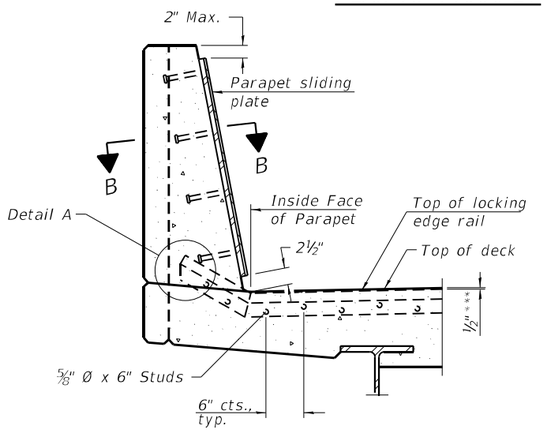

SECTION AT PARAPET

(Skews > 30° shown. Skews ≤ 30° similar except as shown in plan view.)

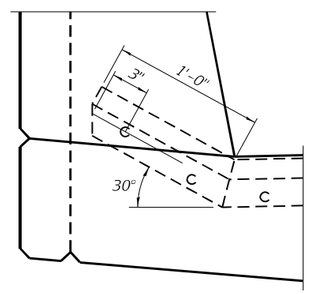

DETAIL A

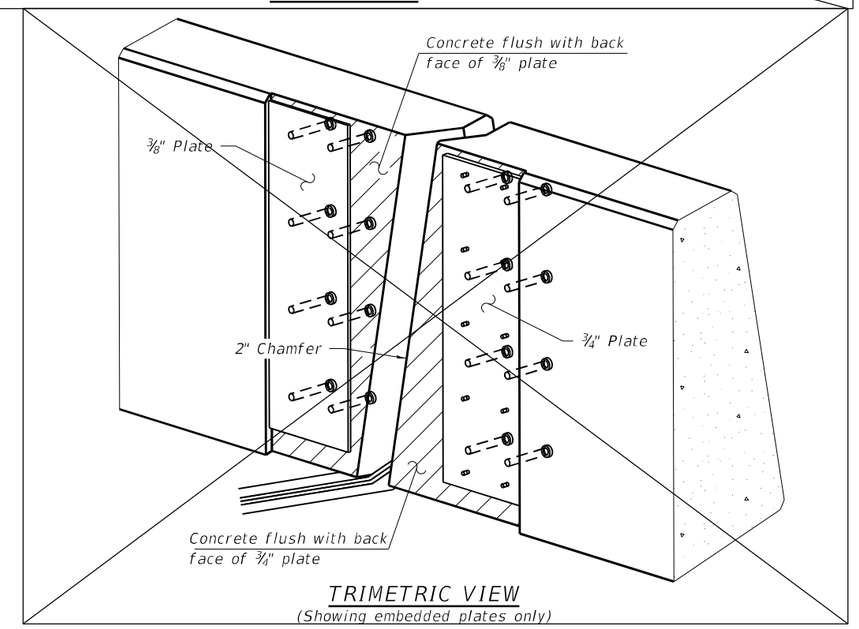

TRIMETRIC VIEW

(Showing embedded plates only)

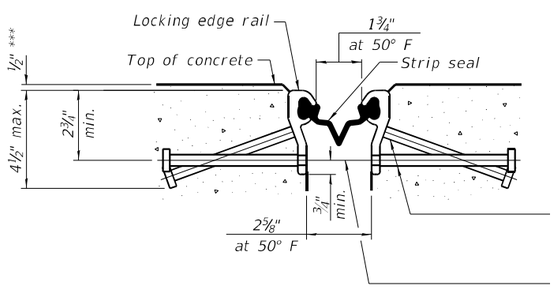

SHOWING ROLLED RAIL JOINT

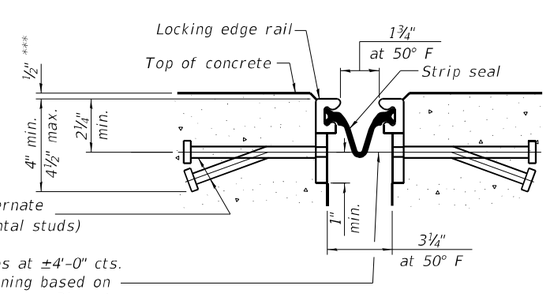

SHOWING WELDED RAIL JOINT

* ⅝" Ø x 6" studs @ 6" cts. (alternate angled/bent studs with horizontal studs)

⅜" ϕ threaded rods in 7/16" ϕ holes at ±4'-0" cts. for holding the proper joint opening based on the temperature during the deck pour. Place to miss studs. All rods shall be burned, or sawed off flush with the plates after concrete is set.

SECTION A-A

* Granular or solid flux filled headed studs conforming to Article 1006.32 of the Std. Specs., automatically end welded.

*** Prior to grinding

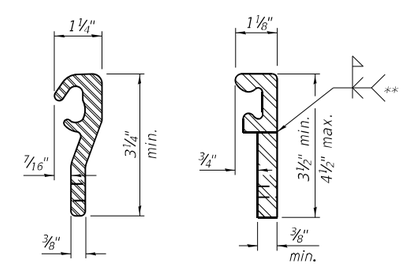

ROLLED (EXTRUDED) RAIL

WELDED RAIL

LOCKING EDGE RAILS

** Back gouge not required if complete joint penetration is verified by mock-up.

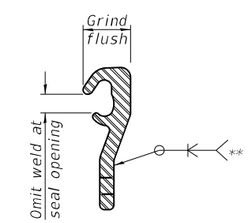

LOCKING EDGE RAIL SPLICE

The inside of the locking edge rail groove shall be free of weld residue. Rolled rail shown, welded rail similar.

Notes:

The strip seal shall be made continuous and shall have a minimum thickness of ¼". The configuration of the strip seal shall match the configuration of the locking edge rails. Open or "webbed" strip seal gland configurations are not permitted. The gland shall be sized for a maximum rated movement of 4 inches.

The locking edge rails depicted are configured for typical applications and are conceptual only. The actual configuration of the locking edge rails and matching strip seal may vary from manufacturer to manufacturer provided they fit the application and meet the minimum anchorage shown. Flanged edge rails, however, will not be allowed. Locking edge rails may exceed the 4½" maximum depth provided the anchorage system is revised according to the manufacturer's recommendation.

The manufacturer's recommended installation methods shall be followed.

All steel components shall be galvanized after fabrication according to Article 520.03 of the Standard Specifications.

The Maximum space between locking edge rail segments shall be 3/16" and sealed with a suitable sealant; however, any rail joint within 10' measured perpendicular to the face of the curb or parapet shall be welded as shown in the locking edge rail splice detail.

Cost of parapet sliding plates, embedded plates, and anchorage studs included with Preformed Joint Strip Seal.

39" constant slope barrier shown, 44" constant slope barrier similar as noted.

The concrete opening below the strip seal will vary based on the locking edge rail chosen by the Contractor. Deck and parapet lengths shown elsewhere in the plans are dimensioned to the concrete opening, not the joint opening, and are based on the rolled locking edge rail. If the Contractor elects to use a different locking edge rail, dimensional adjustments may be required. One exception to this would be the strip seal joint at the end of the precast bridge approach slab. For these cases the pavement connector length shall be adjusted, not the length of the bridge approach slab.

BILL OF MATERIAL

Item	Unit	Total
Preformed Joint Strip Seal	Foot	114

Michael Baker INTERNATIONAL
200 W Adams Street
Suite 1800
Chicago, IL 60606
P:+1 312.707.8772
FAX: 312.707.8804

INFRASTRUCTURE ENGINEERING | INCORPORATED

USER NAME = DLamb	DESIGNED - SPK	REVISED -	
	CHECKED - PK	REVISED -	
PLOT SCALE = 0.1667 ' / in.	DRAWN - CLL	REVISED -	
PLOT DATE = 6/6/2023	CHECKED - SPK	REVISED -	

STATE OF ILLINOIS
DEPARTMENT OF TRANSPORTATION

MODIFIED PREFORMED JOINT STRIP SEAL – MEDIAN (1 of 2)
STRUCTURE NO. 090–0183

SHEET S2-21 OF S2-47 SHEETS

F.A.P. RTE.	SECTION	COUNTY	TOTAL SHEETS	SHEET NO.
VAR.	13 (HVB, HB-3) BR-1;R	TAZEWELL	1173	741
		CONTRACT NO. 68C55		
	ILLINOIS	FED. AID PROJECT		

MODEL: Default
FILE NAME: pw:\\mwi-ussvr.bentley.commnl-usprv-03\Documents\Chicago IL\01 Projects\179740 IDOT Ceda-Sfex PRH5.0 CADD\CAD Sheets\Main St. Bridge Sheets\0090183-68C55-021-PF.DGN

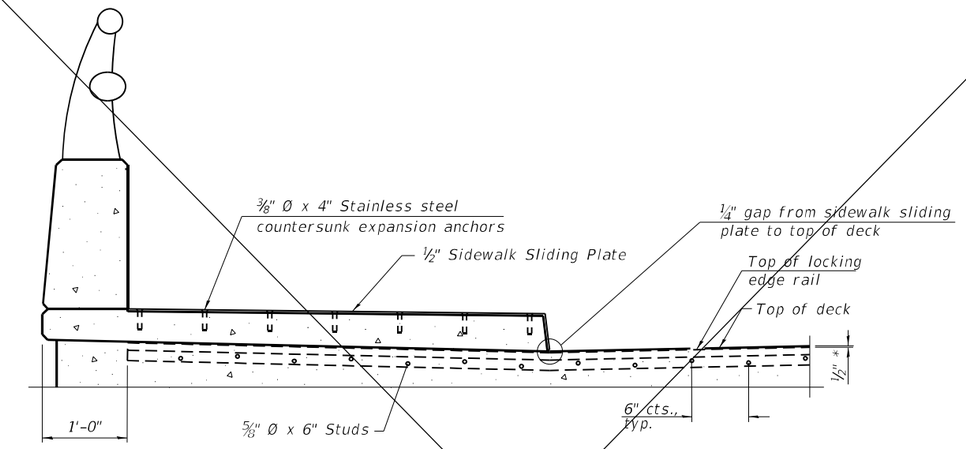

SECTION AT RAISED SIDEWALK

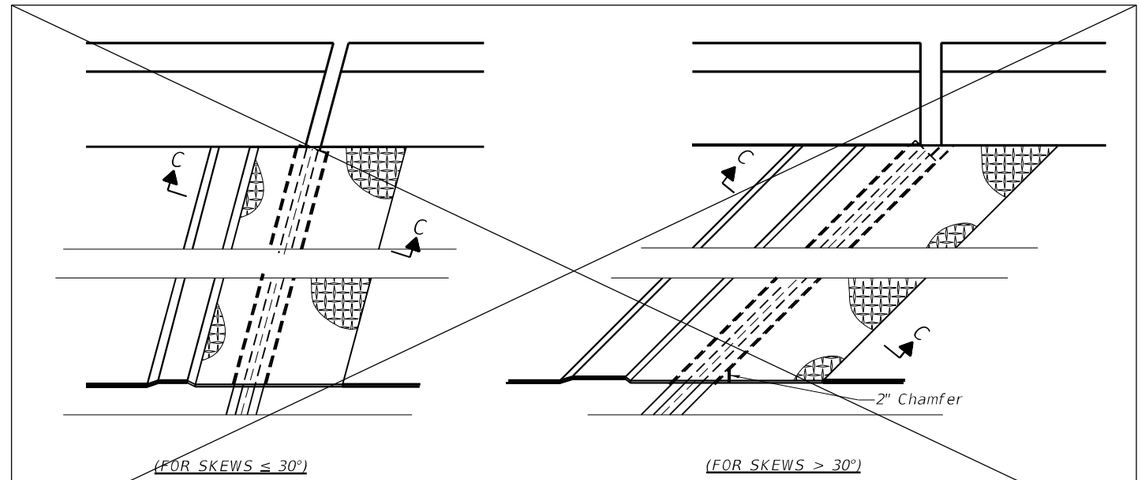

PLAN AT RAISED SIDEWALK

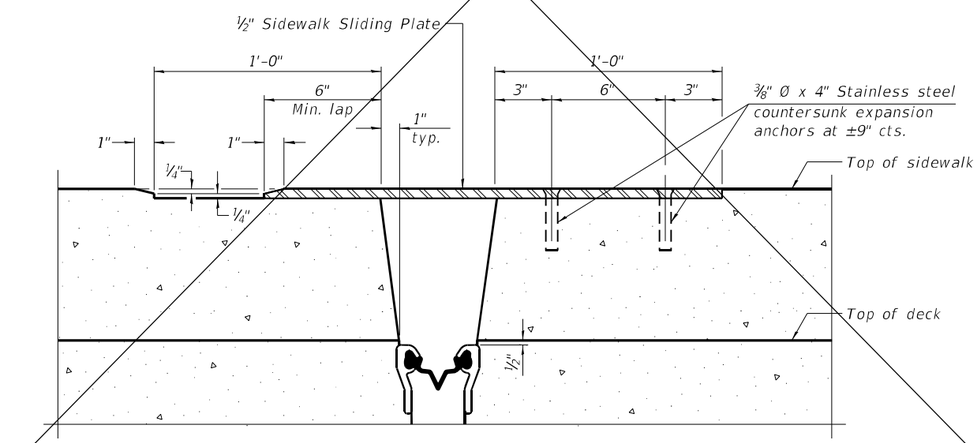

SECTION C-C

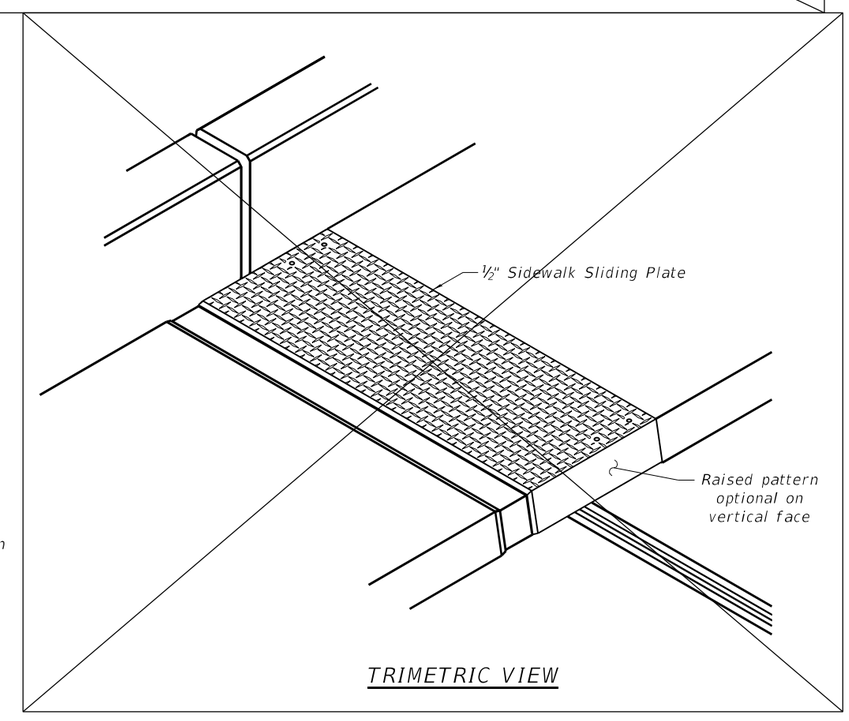

TRIMETRIC VIEW

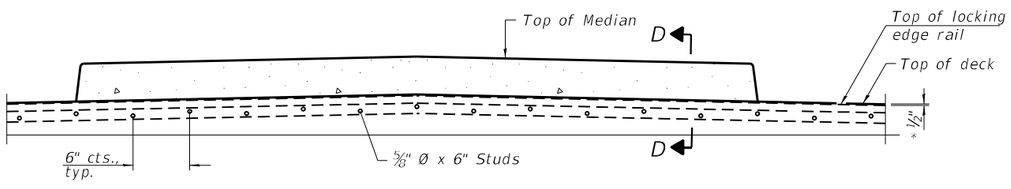

SECTION AT MEDIAN

For skews > 30°, chamfer acute corners 2" similar to sidewalk.

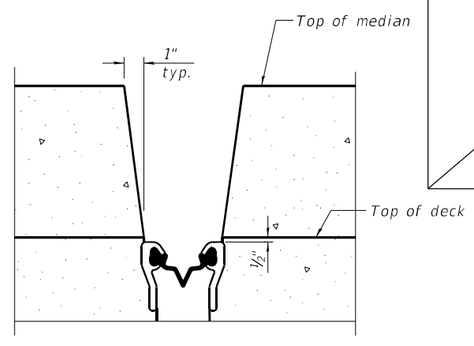

SECTION D-D

(at Rt. ∠'s)

* Prior to grinding

Michael Baker INTERNATIONAL
200 W Adams Street
Suite 1800
Chicago, IL 60606
P:+1 312.707.8770
FAX: 312.707.8804

INFRASTRUCTURE ENGINEERING | INCORPORATED

USER NAME = DLamb	DESIGNED - SPK	REVISED -	
	CHECKED - PK	REVISED -	
PLOT SCALE = 0.1667 ' / in.	DRAWN - CLL	REVISED -	
PLOT DATE = 6/6/2023	CHECKED - SPK	REVISED -	

STATE OF ILLINOIS
DEPARTMENT OF TRANSPORTATION

MODIFIED PREFORMED JOINT STRIP SEAL – MEDIAN (2 of 2)
STRUCTURE NO. 090–0183

SHEET S2-22 OF S2-47 SHEETS

F.A.P. RTE.	SECTION	COUNTY	TOTAL SHEETS	SHEET NO.
VAR.	13 (HVB, HB-3) BR-1;R	TAZEWELL	1173	742
		CONTRACT NO. 68C55		
	ILLINOIS	FED. AID PROJECT		

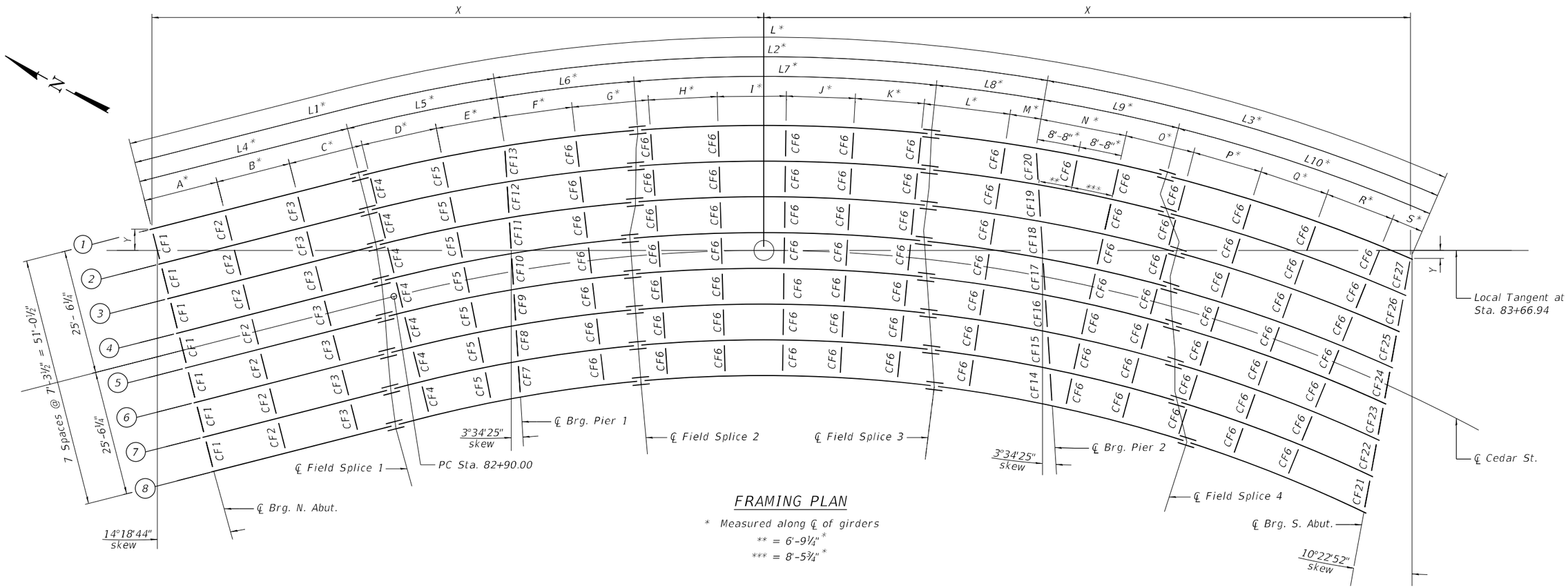

FRAMING PLAN

* Measured along ℄ of girders

** = 6'-9¼"*

*** = 8'-5¾"*

GIRDER DIMENSIONS

Girder	Radius	L	L1	L2	L3	L4	L5	L6	L7	L8	L9	L10
1	333'-6¼"	262'-7½"	73'-11 9/16"	108'-10 7/16"	79'-9½"	43'-8"	30'-3 9/16"	27'-3 7/16"	60'-0"	21'-7"	27'-2"	52'-7½"
2	326'-2¾"	259'-6 3/16"	72'-7⅛"	108'-10⅞"	78'-0 3/16"	43'-8"	28'-11⅛"	26'-5⅞"	60'-0"	22'-5"	26'-11"	51'-1 3/16"
3	318'-11¼"	256'-4 13/16"	71'-2 11/16"	108'-11 5/16"	76'-2 13/16"	43'-6"	27'-8 11/16"	25'-10 5/16"	60'-0"	23'-1"	28'-7"	47'-7 13/16"
4	311'-7¾"	253'-3½"	69'-10¼"	108'-11¾"	74'-5½"	42'-9"	27'-1¼"	24'-4¾"	60'-0"	24'-7"	26'-7"	47'-10½"
5	304'-4¼"	250'-2¼"	68'-5 13/16"	109'-0¼"	72'-8 3/16"	41'-8"	26'-9 13/16"	24'-5 3/16"	60'-0"	24'-7 1/16"	26'-7 15/16"	46'-0¼"
6	297'-0¾"	247'-1"	67'-1⅜"	109'-0 13/16"	70'-10 13/16"	40'-4"	26'-9⅜"	24'-5⅝"	60'-0"	24'-7 3/16"	26'-7 13/16"	44'-3"
7	289'-9¼"	243'-11 13/16"	65'-8 15/16"	109'-1⅜"	69'-1½"	39'-1"	26'-7 15/16"	24'-7 1/16"	60'-0"	24'-6 5/16"	26'-10 11/16"	42'-2 13/16"
8	282'-5¾"	240'-10⅝"	64'-4½"	109'-2"	67'-4⅛"	38'-2"	26'-2½"	24'-9½"	60'-0"	24'-4½"	28'-5½"	38'-10⅝"

GIRDER COORDINATES

Girder	℄ Brg. N. Abutment		Field Splice 1		Pier 1		Field Splice 2		Field Splice 3		Pier 2		Field Splice 4		℄ Brg. S. Abutment	
	X	Y	X	Y	X	Y	X	Y	X	Y	X	Y	X	Y	X	Y
1	-124'-10"	4'-4¼"	-82'-6¼"	15'-1 13/16"	-52'-10⅜"	21'-3⅝"	-25'-9 5/16"	24'-6¼"	34'-1⅝"	23'-9¼"	55'-6¼"	20'-10⅜"	82'-1⅛"	15'-3⅛"	131'-10 7/16"	-1'-7⅞"
2	-123'-0 5/16"	-2'-8½"	-80'-8⅝"	8'-1"	-52'-4 15/16"	13'-11⅞"	-26'-1 7/16"	17'-2 3/16"	33'-9½"	16'-5 11/16"	55'-11⅞"	13'-4 11/16"	82'-3 7/16"	7'-8 3/16"	130'-6¼"	-9'-0¼"
3	-121'-2 11/16"	-9'-9 5/16"	-79'-0 15/16"	11¾"	-51'-11 7/16"	6'-8⅛"	-26'-3 9/16"	9'-10¼"	33'-7 5/16"	9'-1 15/16"	56'-5½"	5'-10 13/16"	84'-3 15/16"	-4 15/16"	129'-2 1/16"	-16'-4 11/16"
4	-119'-5 1/16"	-16'-10 1/16"	-78'-0"	-6'-3¼"	-51-5 15/16"	-7 11/16"	-27'-3⅝"	2'-5⅜"	32'-7¼"	1'-11¼"	56'-11⅛"	-1'-7 3/16"	82'-9⅞"	-7'-6¾"	127'-9 13/16"	-23'-9¼"
5	-117'-7 1/16"	-23-10⅞"	-77'-2 15/16"	-13'-7¼"	-51'-0 7/16"	-7'-11½"	-26'-9¾"	-4'-9 15/16"	33'-1"	-5'-5⅜"	57'-4¾"	-9'-1¼"	83'-3⅞"	-15'-3 9/16"	126'-5 9/16"	-31'-2"
6	-115'-9 13/16"	-30'-11⅝"	-76'-8 13/16"	21'-0"	-50'-7"	-15'-3 5/16"	-26'-3 15/16"	-12'-1¼"	33'-6 13/16"	-12'-10 1/16"	57'-10⅜"	-16'-7½"	83'-8⅞"	-22'-11 13/16"	125'-1 5/16"	-38'-6 13/16"
7	-114'-0 3/16"	-38'-0 7/16"	-76'-1¾"	-28'-4½"	-50'-1½"	-22'-7 3/16"	-25'-9 1/16"	-19'-4½"	34'-1 9/16"	-20'-2 15/16"	58'-4"	-24'-1 15/16"	84'-4⅝"	-30'-9 7/16"	123'-9"	-45'-11 13/16"
8	-112'-2 9/16"	-45'-1 3/16"	-75'-2¾"	-35'-8"	-49'-8"	-29-11 1/16"	-25'-1¼"	-26'-7 11/16"	34'-9 5/16"	-27'-8 1/16"	58'-9 11/16"	-31'-8½"	86'-3 9/16"	-39'-0 5/16"	122'-4 11/16"	-53'-4 15/16"

Notes:

All cross frames between girders shall be installed with erection pins and bolts in accordance with the erection plan approved by the Engineer. Individual cross frames at supports may be temporarily disconnected to install bearing anchor rods.

For dimensions A thru S see Cross Frame Spacing Table on Sheet S2-27.

For steel self weight deflection, see sheet S2-26.

For cross frame steel angle at Pier 1, Pier 2, and South Abutment, see angle "B" on sheet S2-28.

Michael Baker INTERNATIONAL
200 W Adams Street
Suite 1800
Chicago, IL 60606
P: 312.707.8770
FAX: 312.707.8804

INFRASTRUCTURE ENGINEERING | INCORPORATED

USER NAME = DLamb	DESIGNED - SPK	REVISED -	
	CHECKED - PK	REVISED -	
PLOT SCALE = 21.3332 ' / in.	DRAWN - MD	REVISED -	
PLOT DATE = 6/6/2023	CHECKED - SPK	REVISED -	

STATE OF ILLINOIS
DEPARTMENT OF TRANSPORTATION

FRAMING PLAN
STRUCTURE NO. 090-0183

SHEET S2-23 OF S2-47 SHEETS

F.A.P. RTE.	SECTION	COUNTY	TOTAL SHEETS	SHEET NO.
VAR.	13 (HVB, HB-3) BR-1:R	TAZEWELL	1173	743
		CONTRACT NO. 68C55		
		ILLINOIS	FED. AID PROJECT	

EXTERIOR GIRDER 1 MOMENT TABLE						
		0.4 Sp. 1	Pier 1	0.5 Sp. 2	Pier 2	0.6 Sp. 3
Is	(in^4)	20,583	28,642	20,583	28,642	20,583
Ic(n)	(in^4)	54,123	56,758	54,123	56,758	54,123
Ic(3n)	(in^4)	38,611	-	38,611	-	38,611
Ic(cr)	(in^4)	-	32,867	-	32,867	-
Ss	(in^3)	1,167	1,273	1,167	1,273	1,167
Sc(n)	(in^3)	1,536	-	1,536	-	1,536
Sc(3n)	(in^3)	1,423	-	1,423	-	1,423
Sc(cr)	(in^3)	-	1,337	-	1,337	-
Sxc	(in^3)	1,514	1,325	1,483	1,324	1,504
DC1	(k/')	0.96	1.01	0.96	1.01	0.96
MDC1	('k)	252	1,009	619	1,081	375
DC2	(k/')	0.20	0.20	0.20	0.20	0.20
MDC2	('k)	53	192	129	207	78
DW	(k/')	0.31	0.31	0.31	0.31	0.31
MDW	('k)	82	299	203	323	121
M_{L+IM}	('k)	986	1,391	1,397	1,482	1,248
fℓ (Strength I)	(ksi)	0	8.88	0.29	3.01	0.73
Mu + ⅓ fℓ Sxc	('k)	2,230	4,709	3,696	4,799	2,962
Øf Mn	('k)	-	-	-	-	-
fs DC1	(ksi)	2.59	9.51	6.37	10.19	3.86
fs DC2	(ksi)	0.45	1.72	1.09	1.86	0.65
fs DW	(ksi)	0.69	2.67	1.71	2.90	1.02
fs (L+IM)	(ksi)	7.70	12.48	10.91	13.30	9.75
fℓ (Service II)	(ksi)	0	6.58	0.21	2.22	0.55
fs+ fℓ/2 (Service II)	(ksi)	13.74	33.41	23.46	33.35	18.48
0.95Rh Fyf	(ksi)	47.50	47.50	47.50	47.50	47.50
fs + fℓ/3 (Total)(Strength I)	(ksi)	18.31	42.84	31.08	43.69	24.47
Øf Fn	(ksi)	50.00	47.50	50.00	49.00	50.00
Vf	(k)	32.0	33.9	35.0	35.3	35.7

INTERIOR GIRDER 2 MOMENT TABLE						
		0.4 Sp. 1	Pier 1	0.5 Sp. 2	Pier 2	0.6 Sp. 3
Is	(in^4)	20,583	28,642	20,583	28,642	20,583
Ic(n)	(in^4)	55,688	58,229	55,688	58,229	55,688
Ic(3n)	(in^4)	39,993	-	39,993	-	39,993
Ic(cr)	(in^4)	-	33,310	-	33,310	-
Ss	(in^3)	1,167	1,273	1,167	1,273	1,167
Sc(n)	(in^3)	1,546	-	1,546	-	1,546
Sc(3n)	(in^3)	1,435	-	1,435	-	1,435
Sc(cr)	(in^3)	-	1,343	-	1,343	-
Sxc	(in^3)	1,525	1,329	1,494	1,328	1,517
DC1	(k/')	1.05	1.10	1.05	1.10	1.05
MDC1	('k)	241	1,044	593	1,142	330
DC2	(k/')	0.20	0.20	0.20	0.20	0.20
MDC2	('k)	49	185	118	198	67
DW	(k/')	0.31	0.31	0.31	0.31	0.31
MDW	('k)	79	297	196	320	107
M_{L+IM}	('k)	898	1,184	1,101	1,222	996
fℓ (Strength I)	(ksi)	0	8.10	0.54	2.87	1.18
Mu + ⅓ fℓ Sxc	('k)	2,025	4,376	3,141	4,420	7,392
Øf Mn	('k)	-	-	-	-	-
fs DC1	(ksi)	2.48	9.84	6.10	10.77	3.39
fs DC2	(ksi)	0.41	1.65	0.99	1.77	0.56
fs DW	(ksi)	0.66	2.65	1.64	2.86	0.89
fs (L+IM)	(ksi)	6.97	10.58	8.55	10.92	7.73
fℓ (Service II)	(ksi)	0	6.01	0.39	2.13	0.88
fs+ fℓ/2 (Service II)	(ksi)	12.61	30.90	20.04	30.66	15.33
0.95Rh Fyf	(ksi)	47.50	47.50	47.50	47.50	47.50
fs + fℓ/3 (Total)(Strength I)	(ksi)	16.80	39.55	26.47	40.03	20.19
Øf Fn	(ksi)	50.00	47.40	50.00	49.30	50.00
Vf	(k)	25.4	24.4	24.8	24.8	26.1

EXTERIOR GIRDER 1 REACTION TABLE					
		N. Abut.	Pier 1	Pier 2	S. Abut.
RDC1	(k)	23.9	95.3	98.0	30.1
RDC2	(k)	4.8	19.3	19.6	6.1
RDW	(k)	7.4	29.5	30.7	9.5
RL	(k)	53.4	98.8	104.1	69.2
R_{IM}	(k)	12.6	20.7	21.6	16.8
RTotal	(k)	102.1	263.6	274.0	131.7

INTERIOR GIRDER 2 REACTION TABLE					
		N. Abut.	Pier 1	Pier 2	S. Abut.
RDC1	(k)	24.7	120.6	128.4	28.3
RDC2	(k)	4.6	22.6	23.4	5.1
RDW	(k)	7.3	35.4	37.5	8.2
RL	(k)	55.7	107.1	112.0	59.3
R_{IM}	(k)	13.8	21.9	22.8	14.9
RTotal	(k)	106.1	307.6	324.1	115.8

Is, Ss: Non-composite moment of inertia and section modulus of the steel section used for computing fs(Total-Strength I, and Service II) due to non-composite dead loads ($in.^4$ and $in.^3$).

Ic(n), Sc(n): Composite moment of inertia and section modulus of the steel and deck based upon the modular ratio, "n", used for computing fs(Total-Strength I, and Service II) in uncracked sections due to short term composite live loads ($in.^4$ and $in.^3$).

Ic(3n), Sc(3n): Composite moment of inertia and section modulus of the steel and deck based upon 3 times the modular ratio, "3n", used for computing fs(Total-Strength I, and Service II) in uncracked sections due to long-term composite (superimposed) dead loads ($in.^4$ and $in.^3$).

Ic(cr), Sc(cr): Composite moment of inertia and section modulus of the steel and longitudinal deck reinforcement, used for computing fs(Total-Strength I and Service II) in cracked sections, due to both short-term composite live loads and long-term composite (superimposed) dead loads ($in.^4$ and $in.^3$).

Sxc: Section modulus about the major axis of section to the controlling flange, tension or compression, taken as yield moment with respect to the controlling flange over the yield strength of the controlling flange ($in.^3$).

DC1: Un-factored non-composite dead load (kips/ft.).

MDC1: Un-factored moment due to non-composite dead load (kip-ft.).

DC2: Un-factored long-term composite (superimposed excluding future wearing surface) dead load (kips/ft.).

MDC2: Un-factored moment due to long-term composite (superimposed excluding future wearing surface) dead load (kip-ft.).

DW: Un-factored long-term composite (superimposed future wearing surface only) dead load (kips/ft.).

MDW: Un-factored moment due to long-term composite (superimposed future wearing surface only) dead load (kip-ft.).

M_{L+IM}: Un-factored live load moment plus dynamic load allowance (impact)(kip-ft.).

Mu (Strength I): Factored design moment (kip-ft.).
1.25 (MDC1+ MDC2) + 1.5 MDW + 1.75 M_{L+IM}

fℓ: Factored calculated normal stress at edge of flange for controlling flange plate due to lateral bending, Strength I or Service II as applicable (kip-ft.).

Øf Mn: Factored resistance available according to Article A6.1.1 (kips).

fs DC1: Un-factored stress at edge of flange for controlling steel flange due to vertical non-composite dead loads as calculated below (ksi).
MDC1 / Ss

fs DC2: Un-factored stress at edge of flange for controlling steel flange due to vertical composite dead loads as calculated below (ksi).
MDC2 / Sc(3n) or MDC2 / Sc(cr) as applicable.

fs DW: Un-factored stress at edge of flange for controlling steel flange due to vertical composite future wearing surface loads as calculated below (ksi).
MDW / Sc(3n) or MDW / Sc(cr) as applicable.

fs (L+IM): Un-factored stress at edge of flange for controlling steel flange due to vertical composite live plus impact loads as calculated below (ksi).
M_{L+IM} / Sc(n) or M_{L+IM} / Sc(cr) as applicable.

fs + fℓ/2 (Service II): Sum of stresses as computed below (ksi).
fsDC1 + fsDC2 + fsDW + 1.3 fs(L+IM) + fℓ/2

0.95RhFyf: Composite stress capacity for Service II loading according to Article 6.10.4.2 (ksi).

fs + fℓ/3 (Total)(Strength I): Sum of stresses as computed below on non-compact section (ksi).
1.25 (fsDC1 + fsDC2) + 1.5 fsDW + 1.75 fs(L+IM) + fℓ/3

Øf Fn: Non-Compact composite positive or negative stress capacity for Strength I loading according to Article 6.10.7 or 6.10.8 (ksi).

Vf: Maximum factored shear range in span computed according to Article 6.10.10.

Note:
M_L and R_L include the effects of centrifugal force and superelevation.

Michael Baker INTERNATIONAL
200 W Adams Street
Suite 1800
Chicago, IL 60606
PH: 312.707.8770
FAX: 312.707.8804

INFRASTRUCTURE ENGINEERING | INCORPORATED

USER NAME = DLamb	DESIGNED - SPK	REVISED -
	CHECKED - PK	REVISED -
PLOT SCALE = 0.1667 ' / in.	DRAWN - CLL	REVISED -
PLOT DATE = 6/6/2023	CHECKED - SPK	REVISED -

STATE OF ILLINOIS
DEPARTMENT OF TRANSPORTATION

DESIGN DATA TABLES
STRUCTURE NO. 090-0183

SHEET S2-24 OF S2-47 SHEETS

F.A.P. RTE.	SECTION	COUNTY	TOTAL SHEETS	SHEET NO.
VAR.	13 (HVB, HB-3) BR-1;R	TAZEWELL	1173	744
		CONTRACT NO. 68C55		
		ILLINOIS FED. AID PROJECT		

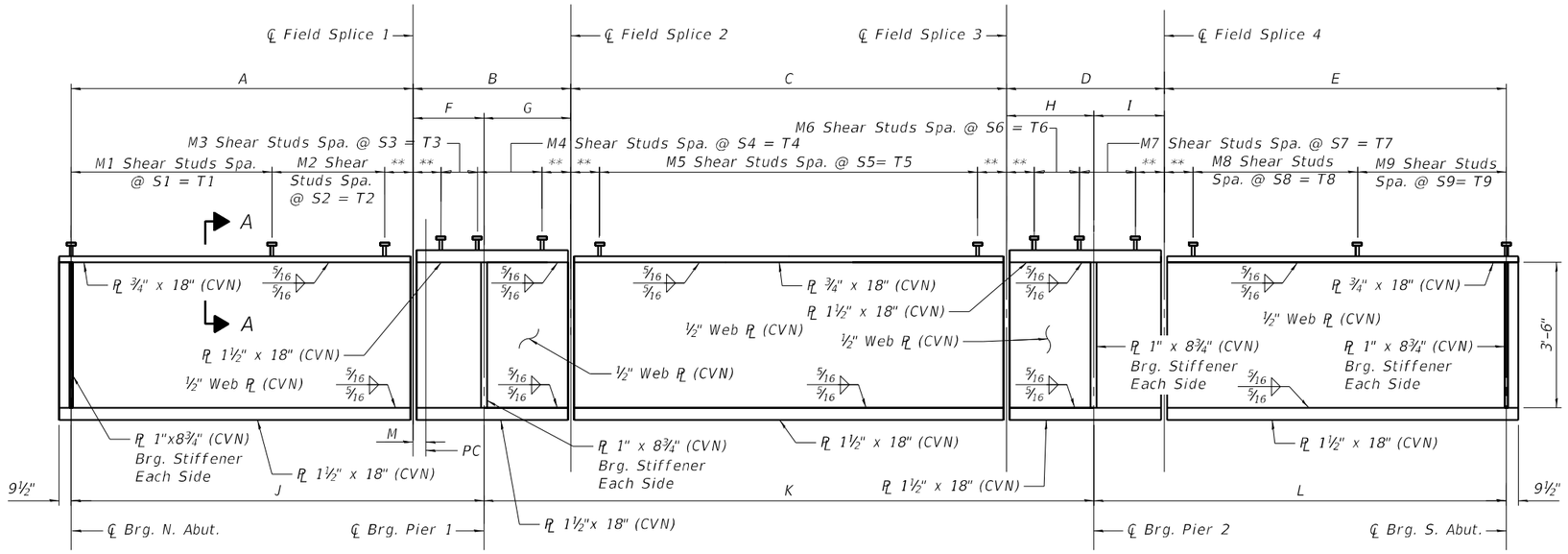

GIRDER ELEVATION

All dimensions are measured along ℄ of girder.

CVN denotes Charpy-V-Notch impact energy requirements, zone 2

** 1'-9½"

TOP OF GIRDER WEB ELEVATION TABLE

Girder	℄ Bearing N. Abut.	℄ Field Splice 1	℄ Pier 1	℄ Field Splice 2	℄ Field Splice 3	℄ Pier 2	℄ Field Splice 4	℄ Bearing S Abut.
1	506.88	507.88	508.46	508.78	508.90	508.79	508.66	508.22
2	506.64	507.54	508.05	508.33	508.46	508.35	508.21	507.76
3	506.40	507.18	507.63	507.89	508.03	507.90	507.74	507.30
4	506.16	506.82	507.14	507.44	507.60	507.45	507.29	506.83
5	505.92	506.46	506.74	507.00	507.16	507.00	506.83	506.37
6	505.68	506.10	506.34	506.56	506.72	506.55	506.37	505.90
7	505.44	505.75	505.94	506.12	506.27	506.10	505.90	505.43
8	505.20	505.40	505.52	505.64	505.83	505.70	505.42	504.96

Top of girder web elevations are the elevations with no load applied to the girders (for fabrication use only).

Notes:
All structural steel shall be AASHTO M270 Grade 50.

Girders have bearing stiffeners and connection plates as required by design. Additional stiffeners may be added at the Contractor's expense as neccesary to prevent distortion of the girders during galvanizing. The Contractor shall coordinate with the fabricator and the galvanizer to determine if additional stiffeners are neccesary, and where these should be placed. Any proposed changes shall be submitted to the Engineer for approval prior to making any changes and documented on the shop drawings.

Temporary stiffener angles shall be bolted to each side of the splice ends of each girder segment to prevent distortion during galvanizing. Temporary stiffener angles shall bolt or fit tight against top and bottom flanges and include spacer tubes to minimize damage to galvanizing during removal. Cost included with Furnishing and Erecting Structural Steel.

Curved girder segments do not meet the requirements for heat bending. Flanges shall be cut for horizontal curvature. Webs shall be cut for vertical girder camber.

For Camber and Field Splice Detail see sheet S2-26.

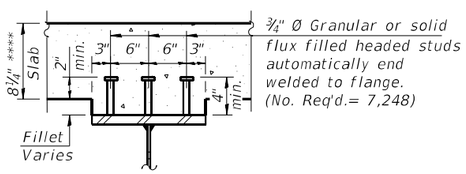

SECTION A-A

**** Prior to grinding

GIRDER DIMENSIONS TABLE

Girder	A	B	C	D	E	F	G	H	I	J	K	L	M
1	43'-8"	57'-7"	60'-0"	48'-9"	52'-7½"	30'-3 9/16"	27'-3 7/16"	21'-7"	27'-2"	73'-11 9/16"	108'-10 7/16"	79'-9½"	⅛"
2	43'-8"	55'-5"	60'-0"	49'-4"	51'-1 3/16"	28'-11⅛"	26'-5⅞"	22'-5"	26'-11"	72'-7⅛"	108'-10⅞"	78'-0 3/16"	⅞"
3	43'-6"	53'-7"	60'-0"	51'-8"	47'-7 13/16"	27'-8 11/16"	25'-10 5/16"	23'-1"	28'-7"	71'-2 11/16"	108'-11 5/16"	76'-2 13/16"	2⅞"
4	42'-9"	51'-6"	60'-0"	51'-2"	47'-10½"	27'-1¼"	24'-4¾"	24'-7"	26'-7"	69'-10¼"	108'-11¾"	74'-5½"	11⅞"
5	41'-8"	51'-3"	60'-0"	51'-3"	46'-0¼"	26'-9 13/16"	24'-5 3/16"	24'-7 1/16"	26'-7 15/16"	68'-5 13/16"	109'-0¼"	72'-8 3/16"	2'-0⅞"
6	40'-4"	51'-3"	60'-0"	51'-3"	44'-3"	26'-9⅜"	24'-5⅝"	24'-7 3/16"	26'-7 13/16	67'-1⅜"	109'-0 13/16"	70'-10 13/16"	3'-4⅞"
7	39'-1"	51'-3"	60'-0"	51'-5"	42'-2 13/16"	26'-7 15/16"	24'-7 1/16"	24'-6 5/16"	26'-10 11/16"	65'-8 15/16"	109'-1⅜"	69'-1½"	4'-7⅞"
8	38'-2"	51'-0"	60'-0"	52'-10"	38'-10⅝"	26'-2½"	24'-9½"	24'-4½"	28'-5½"	64'-4½"	109'-2"	67'-4⅛"	5'-6⅞"

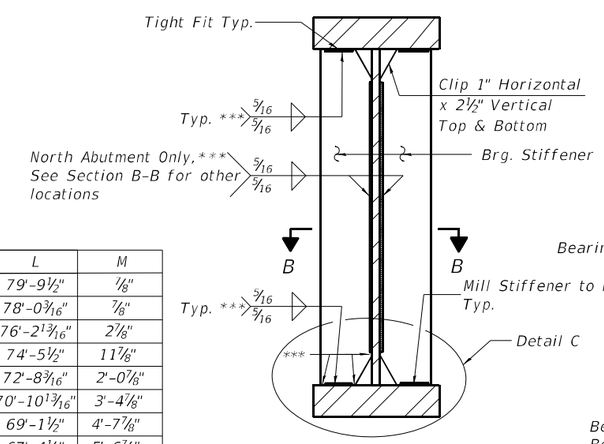

SECTION AT BEARING STIFFENERS

*** Stop welds ¼" (±⅛") from edges as shown. Typical.

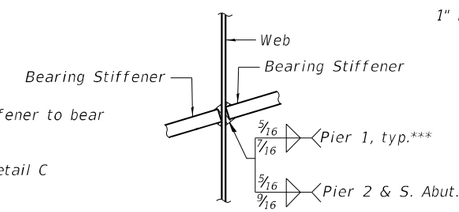

SECTION B-B

Bearing Stiffeners shall be skewed to match ℄ Bearing at Pier 1, Pier 2 and South Abutment. For skew angle see Angle B on sheet S2-28.

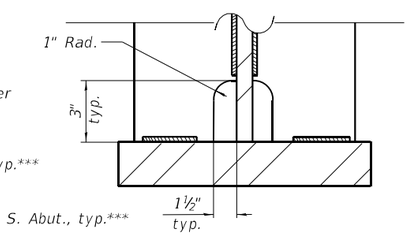

Detail C

Alternative Bearing Clip Detail

SHEAR STUD SPACING TABLE

Girder	M1	S1	T1	M2	S2	T2	M3	S3	T3	M4	S4	T4	M5	S5	T5	M6	S6	T6	M7	S7	T7	M8	S8	T8	M9	S9	T9
1	39	9	29'-3"	17	9	12'-9"	39	9	29'-3"	27	11	24'-9"	57	12	57'-0"	23	10	19'-2"	31	10	25'-10"	22	10	18'-4"	39	10	32'-6"
2	38	9	28'-6"	18	9	13'-6"	36	9	27'-0"	30	10	25'-0"	57	12	57'-0"	27	9	20'-3"	34	9	25'-6"	21	10	17'-6"	38	10	31'-8"
3	37	9	27'-9"	19	9	14'-3"	39	8	26'-0"	29	10	24'-2"	57	12	57'-0"	28	9	21'-0"	36	9	27'-0"	18	10	15'-0"	37	10	30'-10"
4	37	9	27'-9"	18	9	13'-6"	37	8	24'-8"	28	10	23'-4"	57	12	57'-0"	30	9	22'-6"	34	9	25'-6"	21	9	15'-9"	36	10	30'-0"
5	36	9	27'-0"	17	9	12'-9"	38	8	25'-4"	27	10	22'-6"	57	12	57'-0"	30	9	22'-6"	34	9	25'-6"	20	9	15'-0"	39	9	29'-3"
6	35	9	26'-3"	17	9	12'-9"	38	8	25'-4"	27	10	22'-6"	57	12	57'-0"	30	9	22'-6"	34	9	25'-6"	22	8	14'-8"	37	9	27'-9"
7	35	9	26'-3"	17	8	11'-4"	38	8	25'-4"	27	10	22'-6"	57	12	57'-0"	30	9	22'-6"	38	8	25'-4"	20	8	13'-4"	36	9	27'-0"
8	35	9	26'-3"	15	8	10'-0"	37	8	24'-8"	27	10	22'-6"	57	12	57'-0"	30	9	22'-6"	40	8	26'-8"	16	8	10'-8"	35	9	26'-3"

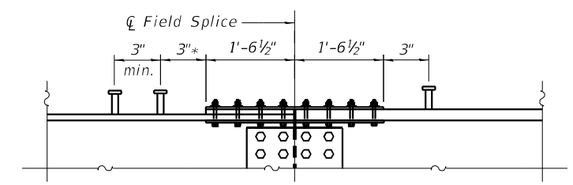

STUD SHEAR CONNECTOR DETAIL AT FIELD SPLICES

DO NOT place stud shear connectors on splice plates.
* If measured location places a row of studs on a splice plate or within 3" of a splice plate, move the row of studs to 3" beyond nearest edge of the splice plate but no closer than 3" to the nearest shear stud.

Michael Baker INTERNATIONAL
200 W Adams Street
Suite 1800
Chicago, IL 60606
P+1: 312.707.8772
FAX: 312.707.8804

INFRASTRUCTURE ENGINEERING | INCORPORATED

USER NAME = DLamb	DESIGNED - SPK	REVISED -	STATE OF ILLINOIS DEPARTMENT OF TRANSPORTATION
	CHECKED - PK	REVISED -	
PLOT SCALE = 0.1667 ' / in.	DRAWN - MD	REVISED -	
PLOT DATE = 6/6/2023	CHECKED - SPK	REVISED -	

STEEL GIRDER DETAILS
STRUCTURE NO. 090-0183

SHEET S2-25 OF S2-47 SHEETS

F.A.P. RTE.	SECTION	COUNTY	TOTAL SHEETS	SHEET NO.
VAR.	13 (HVB, HB-3) BR-1;R	TAZEWELL	1173	745
		CONTRACT NO. 68C55		
	ILLINOIS	FED. AID PROJECT		

CAMBER DIMENSION TABLE

Girder	"A"	"B"	"C"	"D"	"E"	"F"	"G"	"H"	"I"	"J"	"K"	"L"	"M"	"N"	"a"	"b"	"c"	"d"	"e"	"f"	"g"	"h"	"i"	"j"	"k"	"l"	"m"	"n"	"o"
1	10'-11"	43'-8"	± 15'-1 3/16"	30'-3 9/16"	± 13'-7 11/16"	27'-3 7/16"	15'-0"	60'-0"	10'-9 1/2"	21'-7"	13'-7"	27'-2"	13'-1 7/8"	52'-7 1/2"	1/2"	1"	3/4"	1"	1 1/4"	1"	2"	2 1/2"	2"	0"	0"	0"	1"	1 1/4"	3/4"
2	10'-11"	43'-8"	14'-5 9/16"	28'-11 1/8"	13'-2 15/16"	26'-5 7/8"	15'-0"	60'-0"	11'-2 1/2"	22'-5"	13'-5 1/2"	26'-11"	± 12'-9 5/16 "	51'-1 3/16"	3/4"	1"	3/4"	3/4"	1 1/4"	1"	2"	2 1/2"	2"	0"	0"	0"	1"	1 1/4"	3/4"
3	10'-10 1/2"	43'-6"	± 13'-10 5/16"	27'-8 11/16"	±12'-11 3/16"	25'-10 5/16"	15'-0"	60'-0"	± 11'-6 7/16"	23'-0 15/16"	± 14'-3 9/16"	28'-7 1/16"	± 11'-10 15/16"	47'-7 13/16"	3/4"	1"	3/4"	3/4"	1"	3/4"	2"	2 1/2"	2"	0"	0"	0"	1"	1 1/4"	3/4"
4	10'-8 1/4"	42'-9"	13'-6 5/8"	27'-1 1/4"	12'-2 3/8"	24'-4 3/4"	15'-0"	60'-0"	12'-3 1/2"	24'-7"	13'-3 1/2"	26'-7"	11'-11 5/8"	47'-10 1/2"	3/4"	1"	3/4"	0"	0"	0"	2"	2 1/2"	2"	0"	0"	0"	1"	1 1/4"	3/4"
5	10'-5"	41'-8"	± 13'-4 15/16"	26'-9 13/16"	± 12'-2 9/16"	24'-5 7/16"	15'-0"	60'-0"	± 12'-3 9/16"	24'-7 1/16"	± 13'-3 15/16"	26'-7 15/16"	11'-6 1/16"	46'-0 1/4"	1/2"	1"	3/4"	0"	0"	0"	2"	2 1/2"	2"	0"	0"	0"	1"	1 1/4"	3/4"
6	10'-1"	40'-4"	13'-4 11/16"	26'- 9 3/8"	12'-2 13/16"	24'-5 5/8"	15'-0"	60'-0"	± 12'-3 9/16"	24'-7 3/16"	± 13'-3 15/16"	26'-7 13/16"	11'-0 3/4"	44'-3"	1/2"	1"	3/4"	0"	0"	0"	2"	2 1/2"	2"	0"	0"	0"	1"	1 1/4"	3/4"
7	9'-9 1/4"	39'-1"	± 13'-3 15/16"	26'-7 15/16"	± 12'-3 9/16"	24'-7 1/16"	15'-0"	60'-0"	± 12'-3 3/16"	24'-6 5/16"	± 13'-5 5/16"	26'-10 11/16"	± 10'-6 11/16"	42'-2 13/16"	1/2"	1"	3/4"	0"	0"	0"	2"	2 1/2"	2"	0"	0"	0"	3/4"	1"	3/4"
8	9'-6 1/2"	38'-2"	13"-1 1/4"	26'-2 1/2"	12'-4 3/4"	24'-9 1/2"	15'-0"	60'-0"	12'-2 1/4"	24'-4 1/2"	14'-2 3/4"	28'-5 1/2"	± 9'-8 11/16"	38'-10 5/8"	1/2"	1"	3/4"	0"	0"	0"	2 1/4"	2 3/4"	2 1/4"	1/2"	3/4"	1/2"	3/4"	1"	1/2"

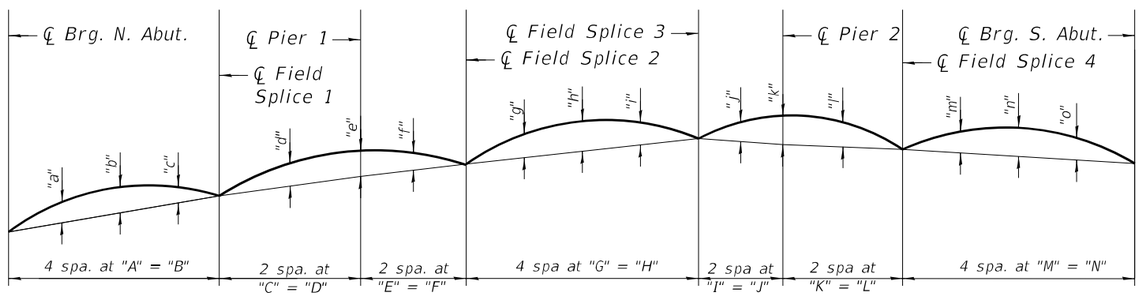

CAMBER DIAGRAM

(Camber includes correction for vertical curve)
Upward Camber is postiive

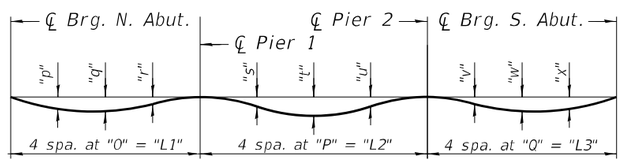

STEEL SELF-WEIGHT DEFLECTION DIAGRAM

The calculated deflections of the primary girders under steel self-weight shall be used to detail the cross frame connections, and to erect the structural steel such that the girders will be plumb within a tolerance of ±1/8" per vertical foot throughout when supporting their own weight.

STEEL SELF-WEIGHT DEFLECTION TABLE

Girder	"L1"	"L2"	"L3"	"O"	"P"	"Q"	"p"	"q"	"r"	"s"	"t"	"u"	"v"	"w"	"x"
1	73'-11 9/16"	108'-10 7/16"	79'-9 1/2"	±18'-5 7/8"	±27'-2 5/8"	19'-11 3/8"	1/16"	1/16"	0"	1/4"	3/8"	3/16"	0"	1/8"	1/8"
2	72'-7 1/8"	108'-10 7/8"	78'-0 3/16"	±18'-1 13/16"	±27'-2 11/16"	±19'-6 1/16"	1/16"	1/16"	0"	3/16"	3/8"	3/16"	0"	1/16"	1/16"
3	71'-2 11/16"	108'-11 5/16"	76'- 2 13/16"	±17'-9 11/16"	±27'-2 13/16"	±19'-0 11/16"	1/16"	1/16"	0"	3/16"	3/8"	3/16"	0"	1/16"	1/16"
4	69'-10 1/4"	108'-11 3/4"	74'-5 1/2"	17'-5 9/16"	27'-2 15/16"	18'-7 3/8"	1/16"	0"	0"	3/16"	3/8"	1/4"	0"	1/16"	1/16"
5	68'-5 13/16"	109'-0 1/4"	72'- 8 3/16"	±17'-1 7/16"	27'-3 1/16"	±18'-2 1/16"	0"	0"	0"	1/4"	3/8"	1/4"	0"	1/16"	1/16"
6	67'-1 3/8"	109'-0 13/16"	70'-10 13/16"	±16'-9 5/16"	±27'-3 3/16"	±17'-8 11/16"	0"	0"	0"	3/16"	3/8"	1/4"	0"	1/16"	1/16"
7	65'-8 15/16"	109'-1 3/8"	69'- 1 1/2"	±16'-5 1/4"	±27'-3 5/16"	17'-3 3/8"	0"	0"	0"	3/16"	3/8"	3/16"	0"	0"	1/16"
8	64'-4 1/2"	109'-2"	67'-4 1/8"	16'-1 1/8"	27'-3 1/2"	±16'-10 11/16"	0"	0"	0"	3/16"	5/16"	3/16"	0"	0"	0"

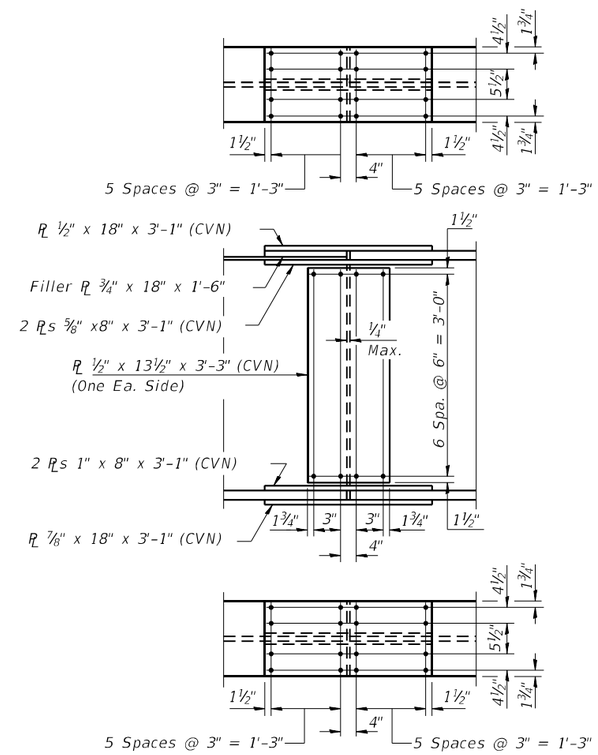

FIELD SPLICE DETAIL

All structural steel shall be AASHTO M270 Grade 50.

(CVN denotes Charpy-V-Notch impact energy requirements, zone 2)

Michael Baker INTERNATIONAL
200 W Adams Street
Suite 1800
Chicago, IL 60606
P+1: 312.707.8772
FAX: 312.707.8804

INFRASTRUCTURE ENGINEERING | INCORPORATED

USER NAME = DLamb	DESIGNED - SPK	REVISED -	STATE OF ILLINOIS DEPARTMENT OF TRANSPORTATION
	CHECKED - PK	REVISED -	
PLOT SCALE = 0.1667 ' / in.	DRAWN - CLL	REVISED -	
PLOT DATE = 6/6/2023	CHECKED - SPK	REVISED -	

STEEL GIRDER CAMBER AND FIELD SPLICE
STRUCTURE NO. 090-0183

SHEET S2-26 OF S2-47 SHEETS

F.A.P. RTE.	SECTION	COUNTY	TOTAL SHEETS	SHEET NO.
VAR.	13 (HVB, HB-3) BR-1;R	TAZEWELL	1173	746
		CONTRACT NO. 68C55		
	ILLINOIS	FED. AID PROJECT		

MODEL: Default
FILE NAME: pw:\\mbs-us-cow.bentley.com:mbs-pw-03\Documents\Chicago IL\01 Projects\179740 IDOT Cedo-Sfex PhII\5.0 CADD\CAD Sheets\Main St. Bridge Sheets\0090183-68C55-076-GirderDetails.dgn

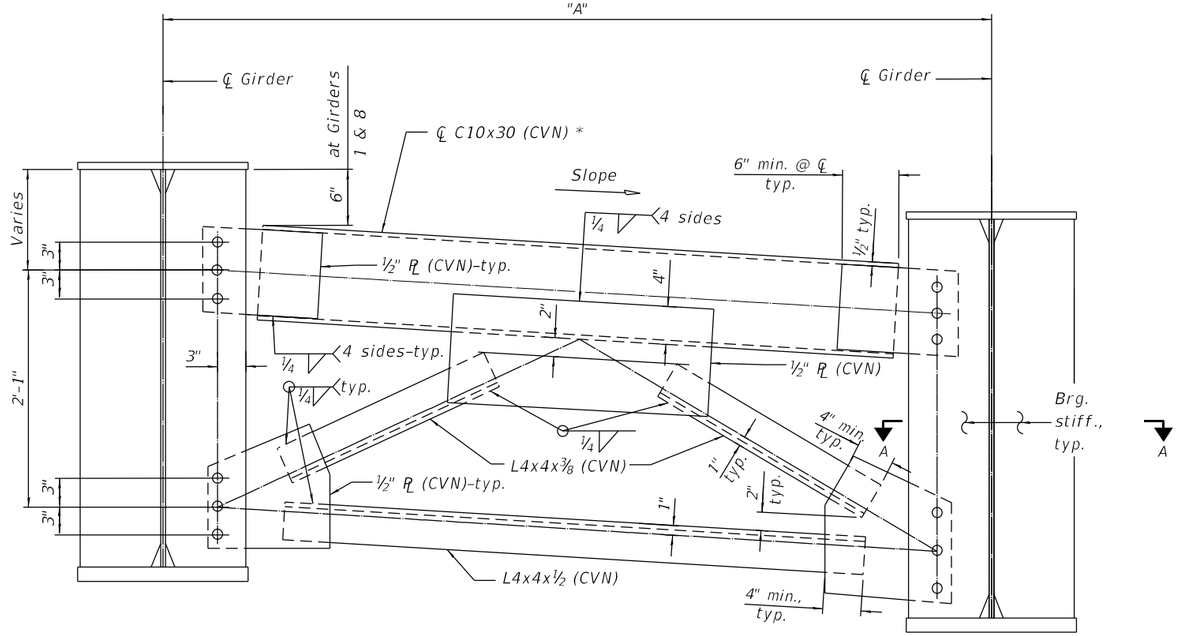

CROSS-FRAME CF1 & CF21-CF27

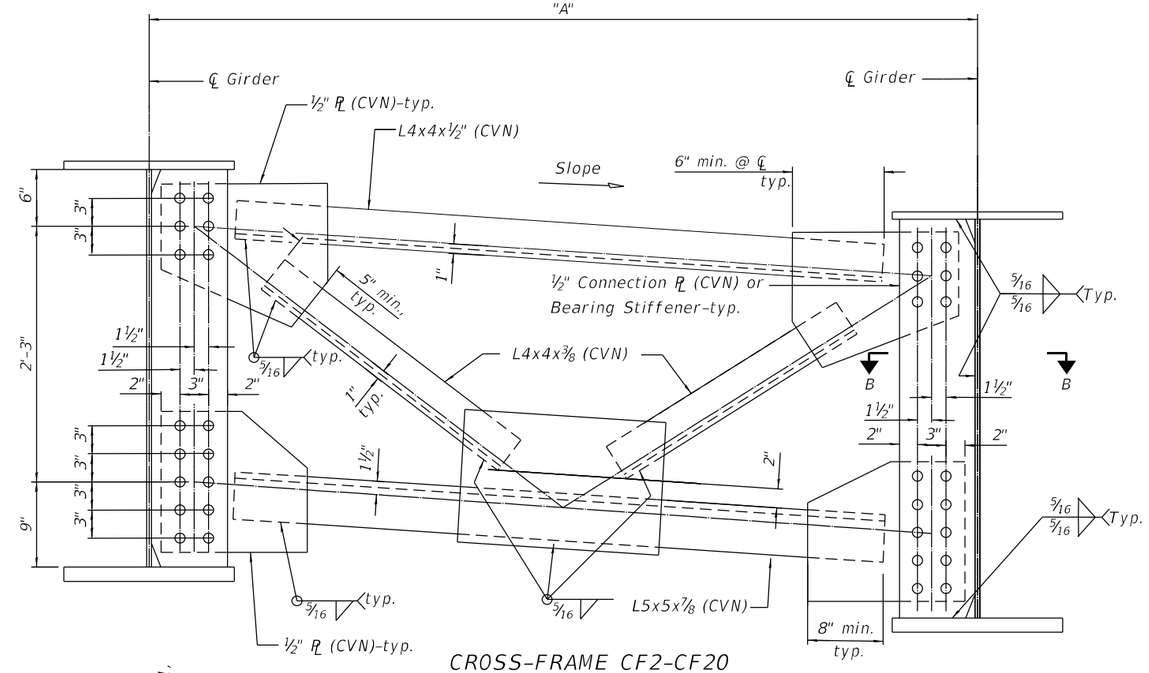

CROSS-FRAME CF2-CF20

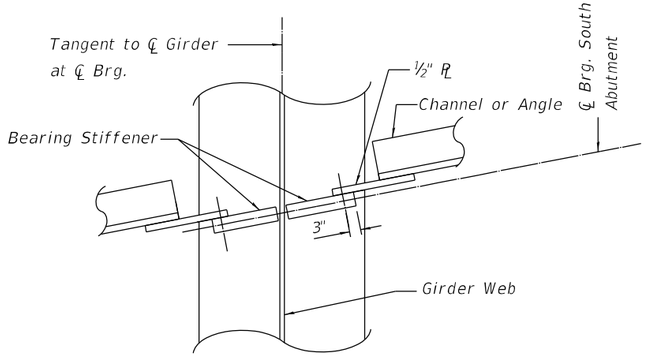

SECTION A-A

Typical at ℄ Brg. South Abutment. For skew angle see angle "B" on sheet S2-28

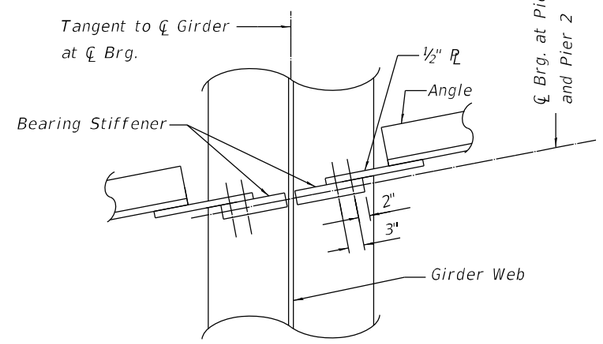

SECTION B-B

Typical at ℄ Brg. Pier 1, and Pier 2.
For skew angle see angle "B" on sheet S2-28

Notes:

All structural steel shall be AASHTO M270 Grade 50.

CVN denotes Charpy-V-Notch impact energy requirements, zone 2.

Dimension "A" measured along ℄ of Cross Frame

Bearing stiffeners and connection plates have the same weld limits and clip details. See Section at Bearing Stiffeners on sheet S2-25.

* Alternate channels of equal depth and larger weight are permitted to facilitate material acquisition. Alternate channels, if utilized, shall be provided at no additional cost to the Department.

CROSS-FRAME DIMENSION "A" AND SLOPE TABLE

Name	"A"	Slope	Quantity
CF1	7'-3 1/2"	3.29%	7
CF2	7'-3 1/2"	3.81%	7
CF3	7'-3 1/2"	4.34%	7
CF4	7'-3 1/2"	4.86%	7
CF5	7'-3 1/2"	5.35%	7
CF6	7'-3 1/2"	6.00%	84
CF7	7'-4 1/16"	5.74%	1
CF8	7'-4 1/16"	5.74%	1
CF9	7'-4"	5.74%	1
CF10	7'-4"	5.74%	1
CF11	7'-3 15/16"	5.74%	1
CF12	7'-3 15/16"	5.74%	1
CF13	7'-3 15/16"	5.74%	1
CF14	7'-6 3/4"	5.90%	1
CF15	7'-6 9/16"	5.90%	1
CF16	7'-6 7/16"	5.90%	1
CF17	7'-6 5/16"	5.90%	1
CF18	7'-6 1/8"	5.90%	1
CF19	7'-6 1/16"	5.90%	1
CF20	7'-5 15/16"	5.90%	1
CF21	7'-6 5/8"	6.16%	1
CF22	7'-6 1/2"	6.16%	1
CF23	7'-6 5/16"	6.16%	1
CF24	7'-6 3/16"	6.16%	1
CF25	7'-6 1/16"	6.16%	1
CF26	7'-5 15/16"	6.16%	1
CF27	7'-5 13/16"	6.16%	1

CROSS-FRAME SPACING

Girder	A	B	C	D	E	F	G	H	I	J	K	L	M	N	O	P	Q	R	S
1	15'-3"	15'-3"	15'-3"	15'-3"	12'-11 9/16"	14'-7"	15'-4"	13'-10"	13'-10"	13'-10"	13'-10"	17'-4"	6'-3 7/16"	17'-4"	14'-0"	14'-0"	14'-0"	14'-0"	6'-5 1/2"
2	15'-3"	15'-3"	15'-2 1/2"	14'-11"	11'-11 3/8"	14'-11 11/16"	15'-0"	13'-6 3/8"	13'-6 3/8"	13'-6 3/8"	13'-6 3/8"	16'-11 7/16"	7'-10 1/4"	15'-3"	13'-8 5/16"	13'-8 5/16"	13'-8 5/16"	13'-8 5/16"	7'-11 15/16"
3	15'-3"	15'-3"	15'-1 15/16"	14'-7"	10'-11 3/4"	15'-4 3/8"	14'-7 15/16"	13'-2 3/4"	13'-2 3/4"	13'-2 3/4"	13'-2 3/4"	16-6 7/8"	9'-5 1/8"	13'-2"	13'-4 5/8"	13'-4 5/8"	13'-4 5/8"	13'-4 5/8"	9'-6 5/16"
4	15'-3"	15'-3"	15'-1 7/16"	14'-3"	9'-11 13/16"	15'-9"	14'-3 15/16"	12'-11 1/8"	12'-11 1/8"	12'-11 1/8"	12'-11 1/8"	16'-2 3/8"	10'-11 15/16"	11'-0 13/16"	13'-1"	13'-1"	13'-1"	13'-1"	11'-0 11/16"
5	15'-3"	15'-3"	15'-0 7/8"	13'-11"	8'-11 15/16"	16'-1 11/16"	13'-11 7/8"	12'-7 1/2"	12'-7 1/2"	12'-7 1/2"	12'-7 1/2"	15'-9 13/16"	12'-6 7/8"	8'-11 3/4"	12'-9 5/16"	12'-9 5/16"	12'-9 5/16"	12'-9 5/16"	12'-7 3/16"
6	15'-3"	15'-3"	15'-0 3/8"	13'-7"	8'-0"	16'-6 3/8"	13'-7 7/8"	12'-3 7/8"	12'-3 7/8"	12'-3 7/8"	12'-3 7/8"	15'-5 1/4"	14'-1 13/16"	6'-10 5/8"	12'-5 5/8"	12'-5 5/8"	12'-5 5/8"	12'-5 5/8"	14'-1 11/16"
7	15'-3"	15'-3"	14'-11 13/16"	13'-3"	7'-0 1/8"	16'-11 1/16"	13'-3 13/16"	12'-0 1/4"	12'-0 1/4"	12'-0 1/4"	12'-0 1/4"	15'-0 11/16"	15'-8 13/16"	4'-9 1/2"	12'-1 15/16"	12'-1 15/16"	12'-1 15/16"	12'-1 15/16"	15'-8 1/4"
8	15'-3"	15'-3"	14'-11 5/16"	12'-11"	6'-0 3/16"	17'-3 3/4"	12'-11 13/16"	11'-8 5/8"	11'-8 5/8"	11'-8 5/8"	11'-8 5/8"	14'-8 1/8"	17'-3 13/16"	2'-8 3/16"	11'-10 5/16"	11'-10 5/16"	11'-10 5/16"	11'-10 5/16"	17'-2 11/16"

Michael Baker INTERNATIONAL
200 W Adams Street
Suite 1800
Chicago, IL 60606
PH: 312.707.8772
FAX: 312.707.8804

INFRASTRUCTURE ENGINEERING | INCORPORATED

USER NAME = DLamb	DESIGNED - SPK	REVISED -
	CHECKED - PK	REVISED -
PLOT SCALE = 0:2.0000 ':" / in.	DRAWN - CLL	REVISED -
PLOT DATE = 6/6/2023	CHECKED - SPK	REVISED -

STATE OF ILLINOIS
DEPARTMENT OF TRANSPORTATION

CROSS FRAMES
STRUCTURE NO. 090-0183

SHEET S2-27 OF S2-47 SHEETS

F.A.P. RTE.	SECTION	COUNTY	TOTAL SHEETS	SHEET NO.
VAR.	13 (HVB, HB-3) BR-1:R	TAZEWELL	1173	747
		CONTRACT NO. 68C55		
	ILLINOIS	FED. AID PROJECT		

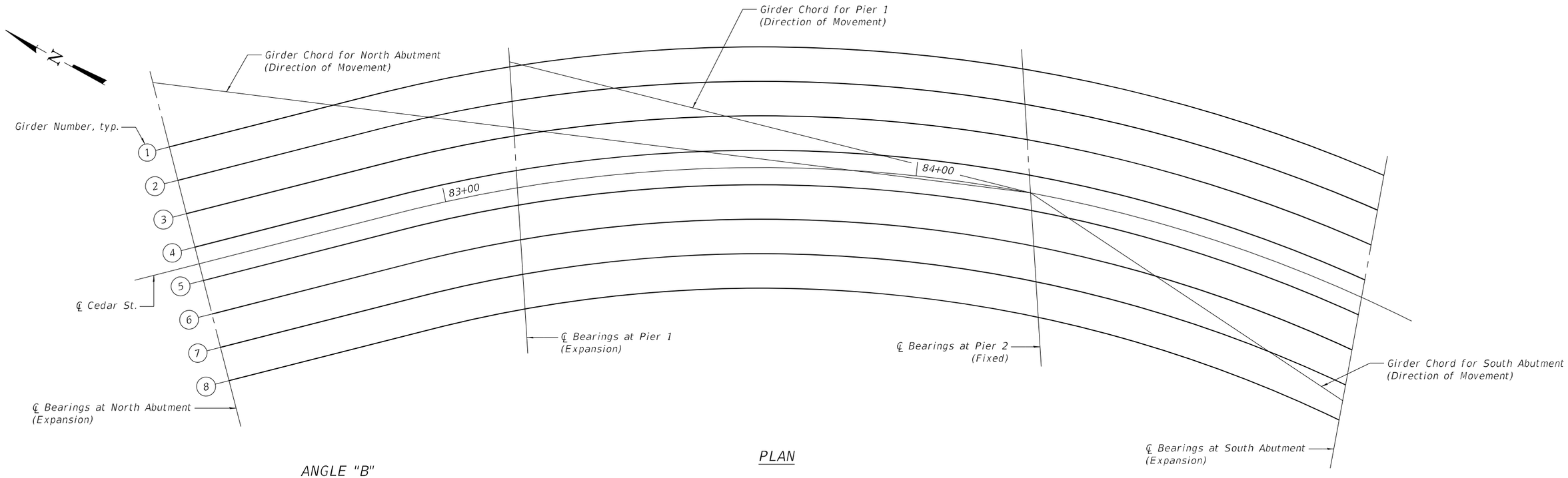

PLAN

ANGLE "B"

Girder	Pier 1	Pier 2	S. Abutment
1	84°27'12"	103°09'24"	102°54'34"
2	84°19'44"	103°27'22"	103°12'11"
3	84°11'56"	103°46'11"	103°30'38"
4	84°03'45"	104°05'54"	103°49'59"
5	83°55'12"	104°26'36"	104°10'16"
6	83°46'12"	104°48'22"	104°31'36"
7	83°36'45"	105°11'15"	104°54'02"
8	83°26'49"	105°35'22"	105°17'40"

NOTES:

Set Top Bearing Plate at right angle to the Direction of Movement/Chord.

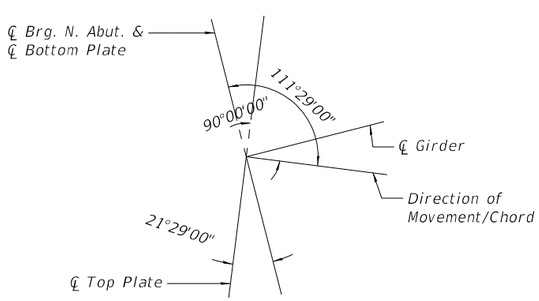

Station Increases

NORTH ABUTMENT

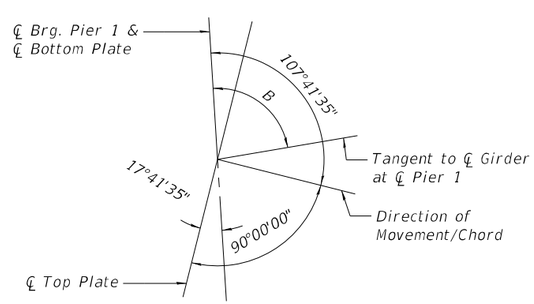

Station Increases

PIER 1

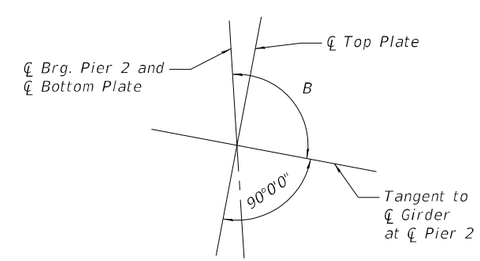

Station Increases

PIER 2

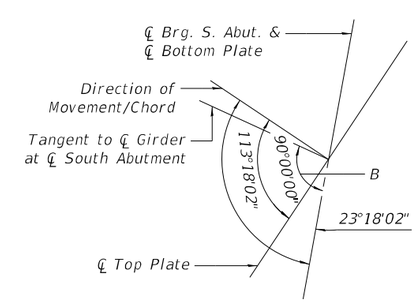

Station Increases

SOUTH ABUTMENT

BEARING ORIENTATION

Michael Baker INTERNATIONAL
200 W Adams Street
Suite 1800
Chicago, IL 60606
PH: 312.707.8772
FAX: 312.707.8804

INFRASTRUCTURE ENGINEERING | INCORPORATED

USER NAME = DLamb	DESIGNED - SPK	REVISED -
	CHECKED - PK	REVISED -
PLOT SCALE = 21.3333 ' / in.	DRAWN - MD	REVISED -
PLOT DATE = 6/6/2023	CHECKED - PK	REVISED -

STATE OF ILLINOIS
DEPARTMENT OF TRANSPORTATION

BEARING LAYOUT & ORIENTATION
STRUCTURE NO. 090–0183

SHEET S2-28 OF S2-47 SHEETS

F.A.P. RTE.	SECTION	COUNTY	TOTAL SHEETS	SHEET NO.
VAR.	13 (HVB, HB-3) BR-1;R	TAZEWELL	1173	748
		CONTRACT NO. 68C55		
	ILLINOIS	FED. AID PROJECT		

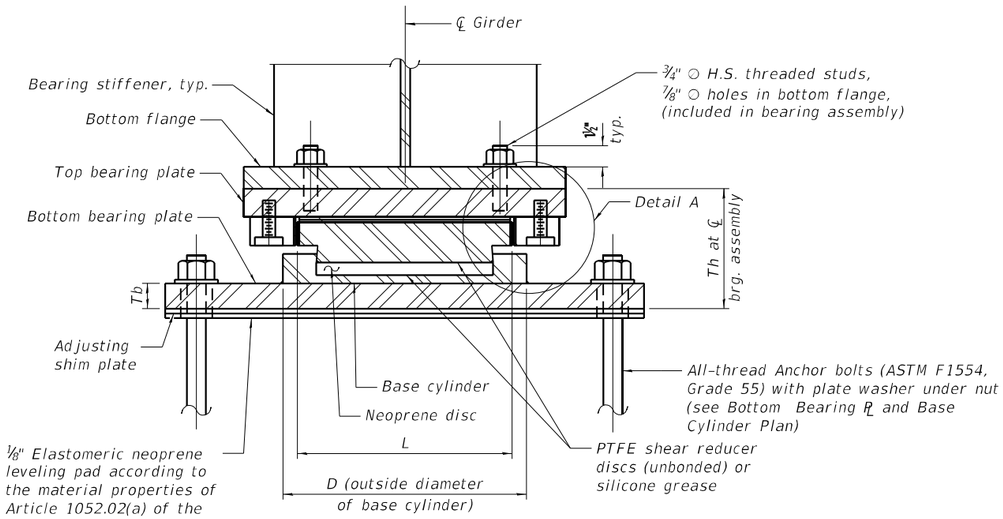

GUIDED EXPANSION HLMR BEARING

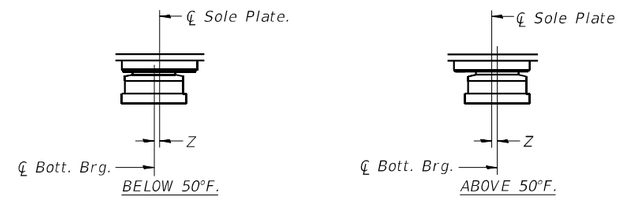

SETTING ANCHOR BOLTS AT EXP. BRG.

Z=⅛" per 100' of expansion for every 15° temp. change from the normal temp. of 50° F.

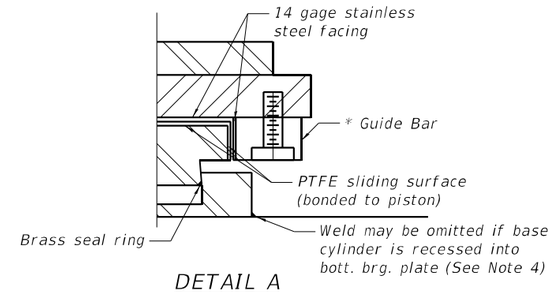

DETAIL A

* As alternates to the bolted connection shown, the guide bars may be connected to the top bearing plate by groove welds or the guide bars and top bearing plate may be fabricated as a single piece.

DIMENSIONS (IN)

Member	Dimension	N. Abut.	Pier 1	S. Abut.
Top Bearing Plate	Wt	13	14½	11½
	Lt	18	18	18
	Tt	1½	2	1½
Bearing	D	7½	12½	8
	L	8	12½	8½
Bottom Bearing Plate	Wb	12	17	12
	Lb	30	28	30
	Tb	2	2	2
Bearing Assembly	Th	6¾	9⅝	7⅝
H.S. Stud	a	4½	5¼	3¾
	b	5¾	5¼	3¼

DESIGN DATA

Data	N. Abut.	Pier 1	S. Abut.
Service Vertical Design Load (kips)	98	286	115
Pay Item Size (kips)	100	300	150
Factored Horizontal Design Load (kips)	21	67	33
Factored Design Rotation (rad)	0.023	0.033	0.026
Total Required Longitudinal Movement (in)	2.76	1.65	1.20

BILL OF MATERIAL

Item	Unit	Total
High Load Multi-Rotational Bearings, Pot, Guided Expansion-100K	Each	8
High Load Multi-Rotational Bearings, Pot, Guided Expansion-200K	Each	8
High Load Multi-Rotational Bearings, Pot, Guided Expansion-300K	Each	8
Anchor Bolts, ¾"	Each	64
Anchor Bolts, 1"	Each	32

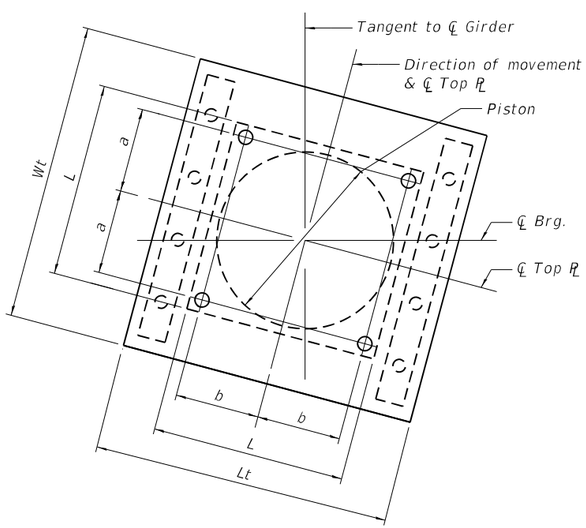

TOP BEARING PL AND PISTON PLAN

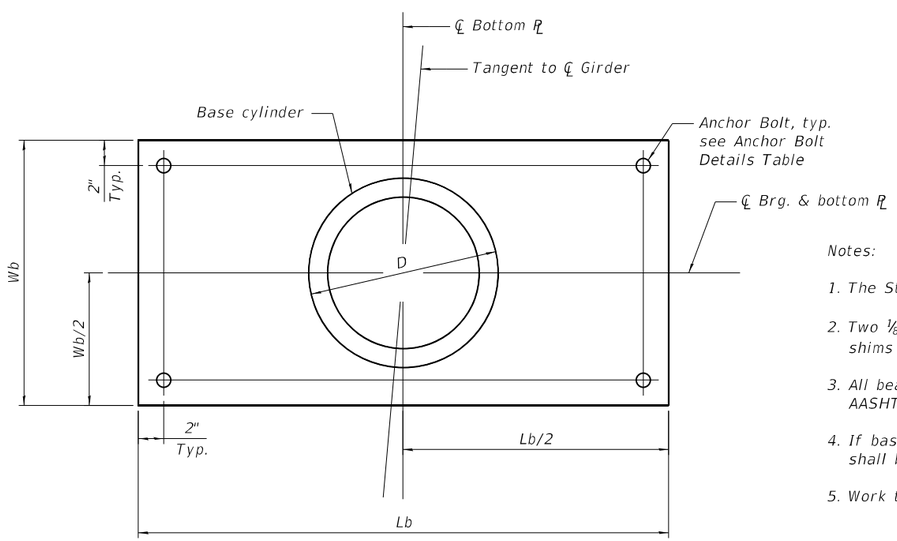

BOTTOM BEARING PL AND BASE CYLINDER PLAN

ANCHOR BOLT DETAILS TABLE

Location	Bolt ○ x Length **	Plate Washer	Base Plate Hole ○
N. Abut. & S. Abut.	¾" x 12"	2" x 2" x 5/16"	1¼"
Pier 1	1" x 12"	2¼" x 2¼" x 5/16"	1½"

**Length shown is minimum required embedment length

Notes:

1. The Structural Steel for the top and bottom bearing plates shall be AASHTO M270 Grade 50.
2. Two ⅛" adjusting shims shall be provided for each bearing in addition to all other plates or shims and placed as shown on the bearing details. Cost included with bearing pay item.
3. All bearing plates, H.S. studs, anchor bolts, nuts and washers shall be galvanized according to AASHTO M111 or M232 as applicable.
4. If base cylinder is recessed into the bottom bearing plate, the thickness of the bottom plate shall be Tb plus the depth of the recess.
5. Work this sheet with Sheet S2-27 for bearing orientations.
6. The Contractor shall determine final dimensions of all bearing components including bottom plate, top plate, threaded studs, bolted flange connections, anchor rods, and overall height. The contractor shall be responsible for verifying bearing heights and adjusting concrete pedestals, if required.

Michael Baker INTERNATIONAL
200 W Adams Street
Suite 1800
Chicago, IL 60606
PH: 312.707.8772
FAX: 312.707.8804

INFRASTRUCTURE ENGINEERING | INCORPORATED

USER NAME = DLamb	DESIGNED - PK	REVISED -	
	CHECKED - SPK	REVISED -	
PLOT SCALE = 0.1667 ' / in.	DRAWN - PK	REVISED -	
PLOT DATE = 6/6/2023	CHECKED - SPK	REVISED -	

STATE OF ILLINOIS
DEPARTMENT OF TRANSPORTATION

BEARINGS – ABUTMENTS AND PIER 1
STRUCTURE NO. 090–0183

SHEET S2-29 OF S2-47 SHEETS

F.A.P. RTE.	SECTION	COUNTY	TOTAL SHEETS	SHEET NO.
VAR.	13 (HVB, HB-3) BR-1;R	TAZEWELL	1173	749
		CONTRACT NO. 68C55		
	ILLINOIS	FED. AID PROJECT		

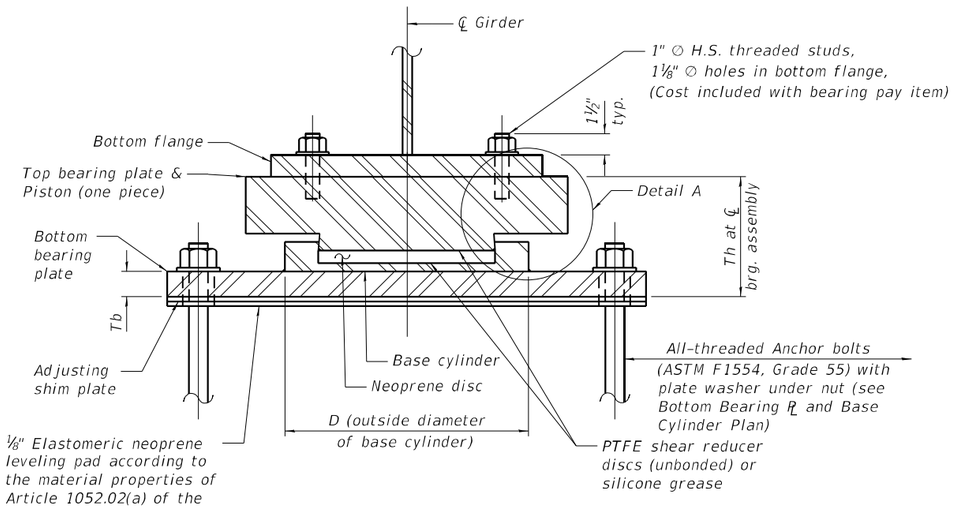

FIXED HLMR BEARING

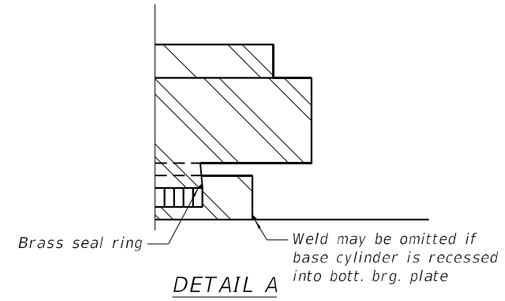

DETAIL A

DIMENSIONS (IN)

Member	Dimension	Pier 2
Top Bearing Plate	Wt	12½
	Lt	18
	Tt	2
Bearing	D	12½
Bottom Bearing Plate	Wb	14½
	Lb	31
	Tb	2¼
Bearing Assembly	Th	6⅞
H.S. Stud	a	4¼
	b	7

DESIGN DATA

Data	Pier 2
Service Vertical Design Load (kips)	302
Pay Item Size (kips)	350
Factored Horizontal Design Load (kips)	115
Factored Design Rotation (rad)	0.016

BILL OF MATERIAL

Item	Unit	Total
High Load Multi-Rotational Bearings, Pot, Fixed-400K	Each	8
Anchor Bolts, 1 1/4"	Each	32

ANCHOR BOLT DETAILS TABLE

Location	Bolt ∅ x Length **	Plate Washer	Base Plate Hole ∅
Pier 2	1¼" x 15"	2¾" x 2¾" x 5/16"	1¾"

**Length shown is minimum required embedment length

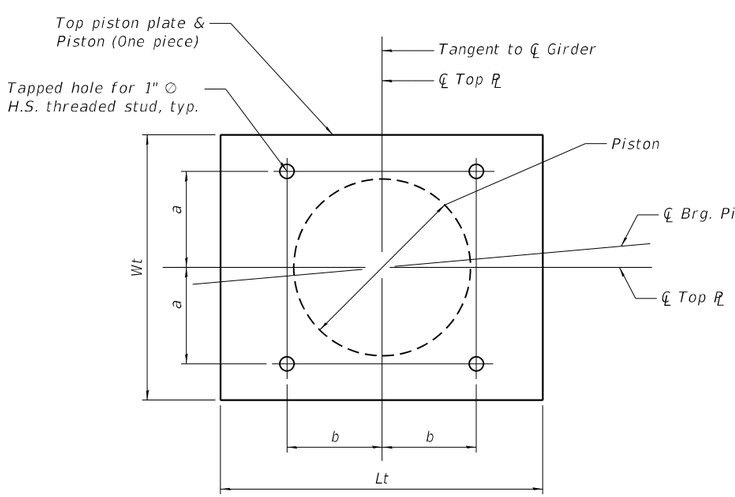

TOP BEARING PL AND PISTON PLAN

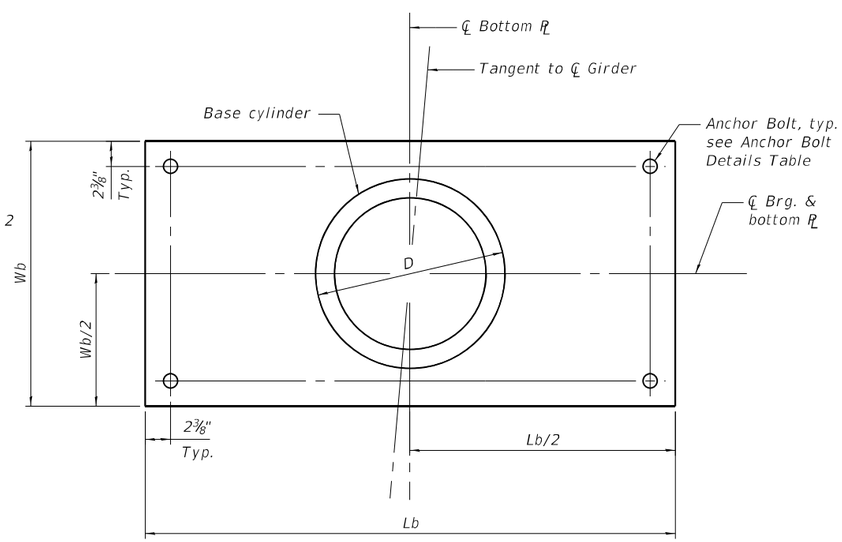

BOTTOM BEARING PL AND BASE CYLINDER PLAN

NOTES:

1. The Structural Steel for the top and bottom bearing plates shall be AASHTO M270 Grade 50.
2. Two ⅛" adjusting shims shall be provided for each bearing in addition to all other plates or shims and placed as shown on the bearing details. Cost included with bearing pay item.
3. All bearing plates, H.S. studs, anchor bolts, nuts and washers shall be galvanized according to AASHTO M111 or M232 as applicable.
4. If base cylinder is recessed into the bottom bearing plate, the thickness of the bottom plate shall be Tb plus the depth of the recess.
5. Work this sheet with Sheet S2-27 for bearing orientations.
6. The Contractor shall determine final dimensions of all bearing components including bottom plate, top plate, threaded studs, bolted flange connections, anchor rods, and overall height.
The contractor shall be responsible for verifying bearing heights and adjusting concrete pedestals, if required.

Michael Baker INTERNATIONAL
200 W Adams Street
Suite 1800
Chicago, IL 60606
P-E: 312.707.8770
FAX: 312.707.8804

INFRASTRUCTURE ENGINEERING | INCORPORATED

USER NAME = DLamb	DESIGNED - PK	REVISED -	
	CHECKED - SPK	REVISED -	
PLOT SCALE = 0.1667 ' / in.	DRAWN - MD	REVISED -	
PLOT DATE = 6/6/2023	CHECKED - SPK	REVISED -	

STATE OF ILLINOIS
DEPARTMENT OF TRANSPORTATION

BEARINGS – PIER 2
STRUCTURE NO. 090–0183

SHEET S2-30 OF S2-47 SHEETS

F.A.P. RTE.	SECTION	COUNTY	TOTAL SHEETS	SHEET NO.
VAR.	13 (HVB, HB-3) BR-1;R	TAZEWELL	1173	750
		CONTRACT NO. 68C55		
	ILLINOIS	FED. AID PROJECT		

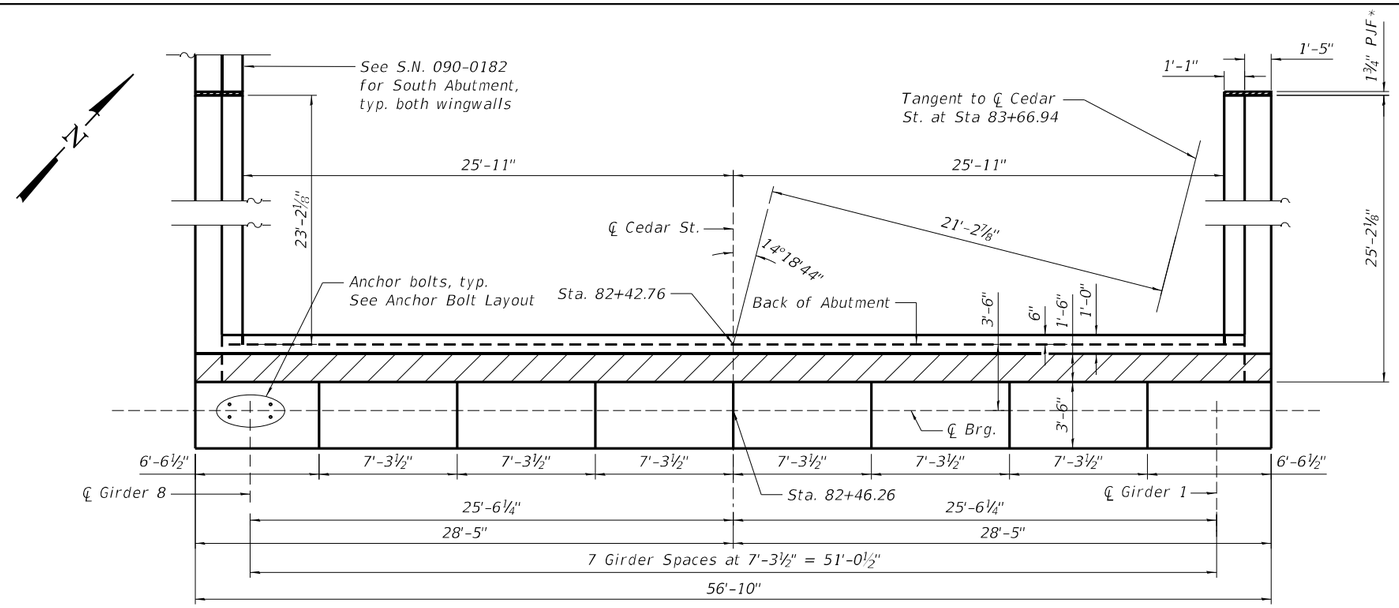

PLAN

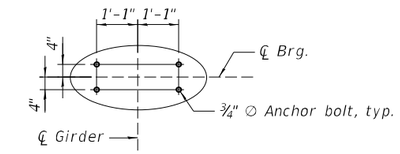

ANCHOR BOLT LAYOUT

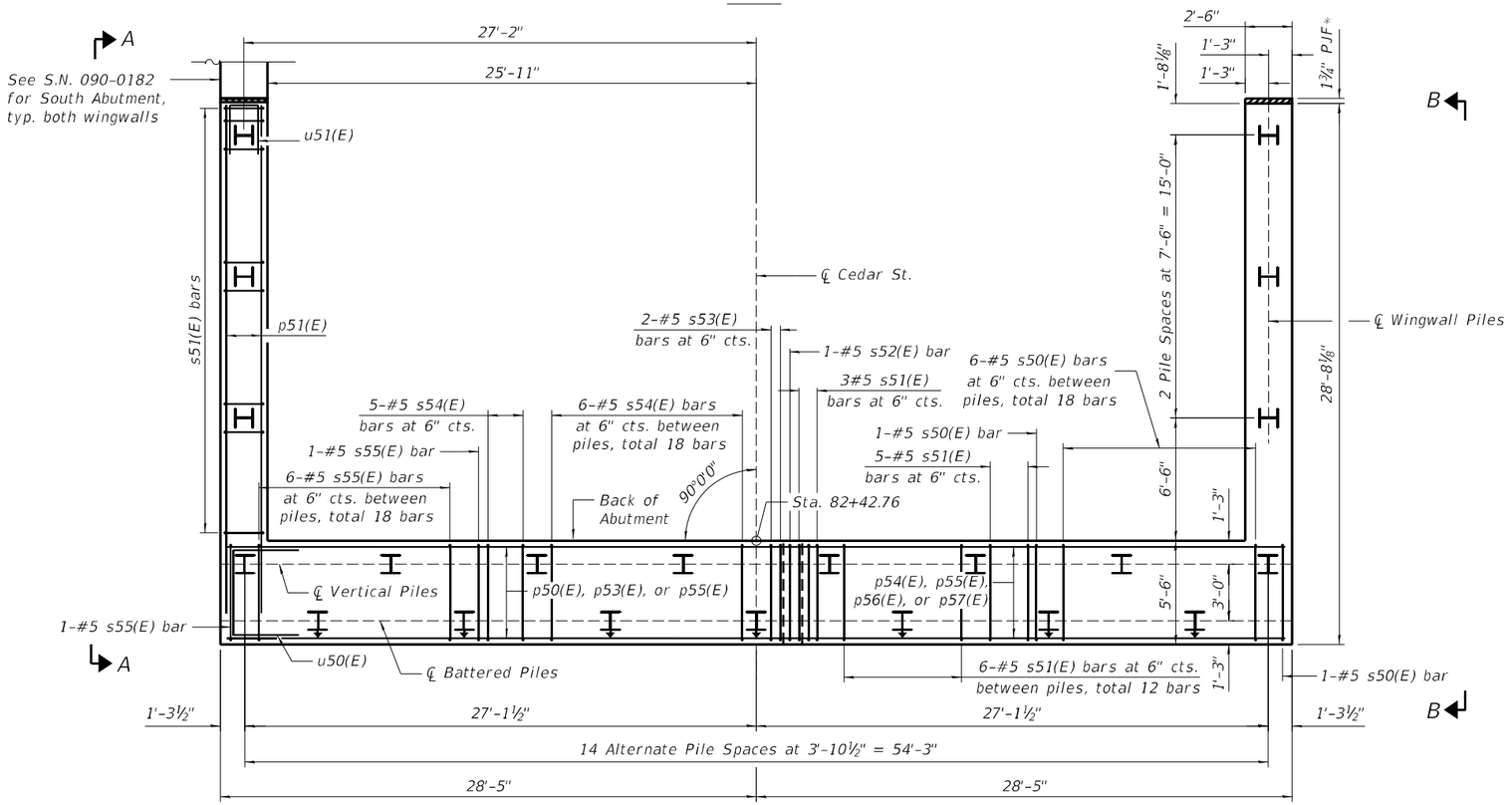

PILE CAP PLAN

NOTES

1. For section A-A and B-B, see Sheet S2-32.
2. For pile data, bill of material and bar bending details, see Sheet S2-33.

* Cost of 1¾" PJF included and installed with S.N. 090-0182

INFRASTRUCTURE ENGINEERING INCORPORATED	USER NAME = DLamb	DESIGNED - PK	REVISED -	STATE OF ILLINOIS DEPARTMENT OF TRANSPORTATION	NORTH ABUTMENT PLANS STRUCTURE NO. 090-0183	F.A.P. RTE.	SECTION	COUNTY	TOTAL SHEETS	SHEET NO.
		CHECKED - SPK	REVISED -			VAR.	13 (HVB, HB-3) 8R-1:R	TAZEWELL	1173	751
	PLOT SCALE = 0.1667 ' / in.	DRAWN - MD	REVISED -			CONTRACT NO. 68C55				
	PLOT DATE = 6/6/2023	CHECKED - PK	REVISED -		SHEET S2-31 OF S2-47 SHEETS	ILLINOIS	FED. AID PROJECT			

MODEL: Default
FILE NAME: pw:\\mb-us-pw.bentley.com:mb-us-pw-03\Documents\Chicago IL\01 Projects\179740 IDOT Cedar\SE+ Phll 5.0 CADD\CAD Sheets\Main St. Bridge Sheets\0090183-68C55-031-NAbut1.dgn

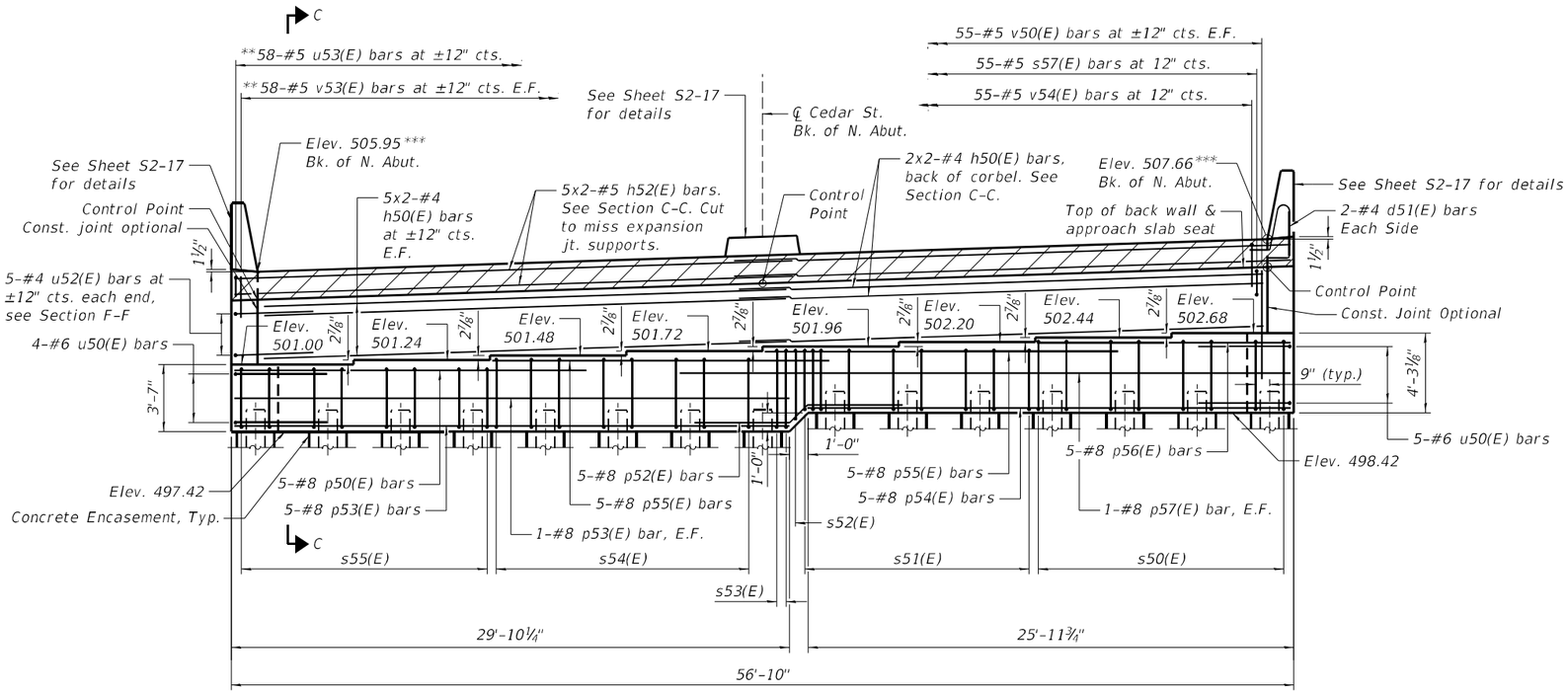

ELEVATION

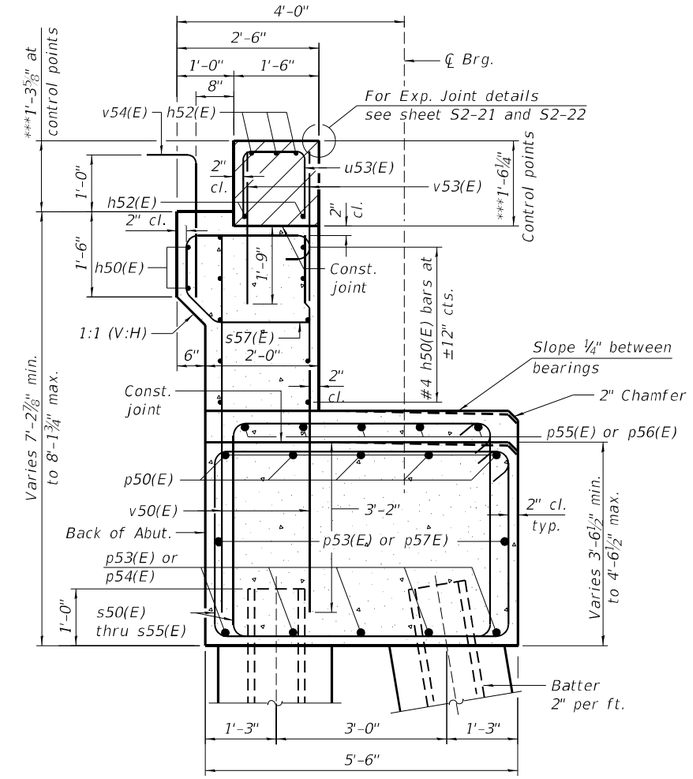

SECTION C-C

** Spaced to miss expansion joint supports or members according to the approved shop drawings and as appoved by the Engineer.

*** Prior to grinding

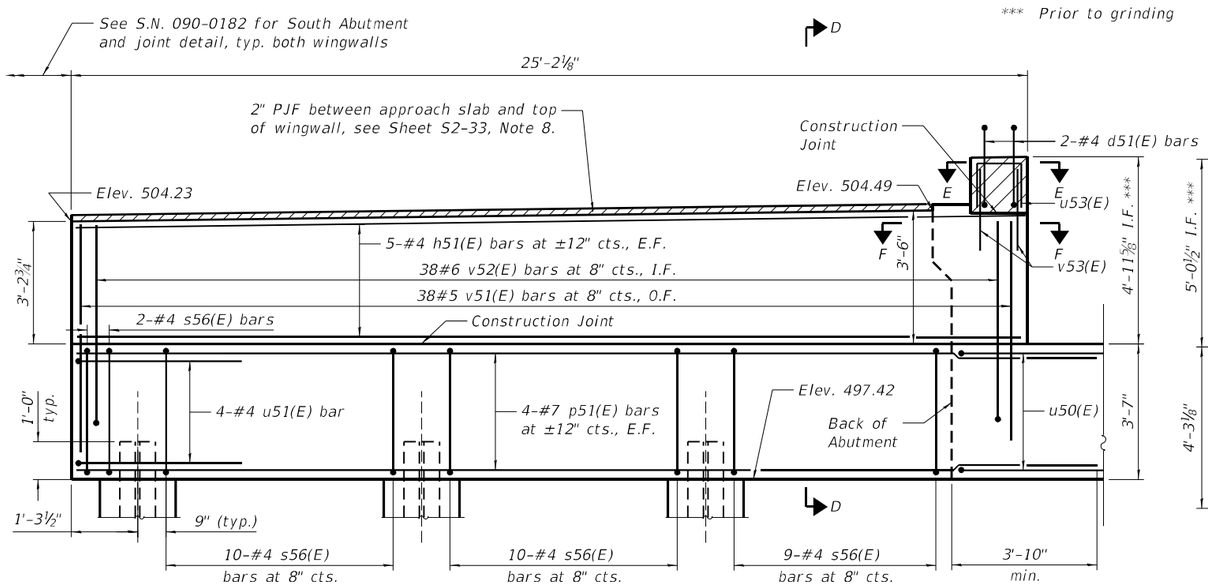

VIEW A-A

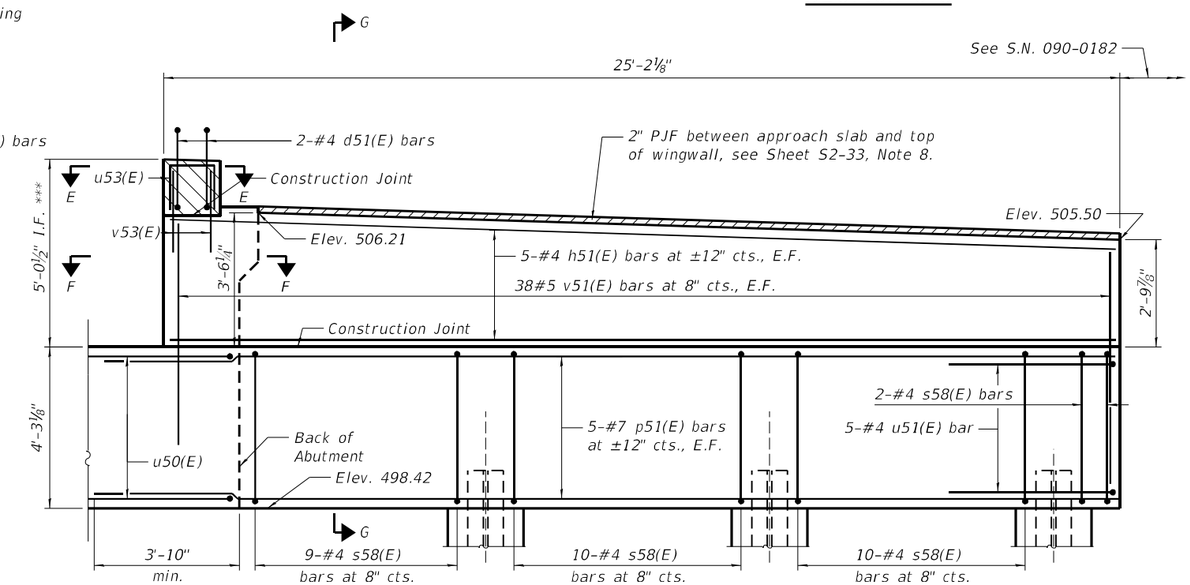

VIEW B-B

Note: For sections D-D, E-E, F-F, G-G, Bill of Material and Bar Bending details, see Sheet S2-33.

MODEL: Default
FILE NAME: pw:\\ms-ussv.bentley.com:ms-ussv-pw03\Documents\Chicago IL\01 Projects\179740 IDOT Cedar St\Ext PRH15.0 CADD\CAD Sheets\Main St. Bridge Sheets\0090183-68C53-032-NAbut2.dgn

INFRASTRUCTURE ENGINEERING INCORPORATED

USER NAME = DLamb	DESIGNED - PK	REVISED -	
	CHECKED - SPK	REVISED -	
PLOT SCALE = 0.1667 ' / in.	DRAWN - MD	REVISED -	
PLOT DATE = 6/6/2023	CHECKED - PK	REVISED -	

STATE OF ILLINOIS
DEPARTMENT OF TRANSPORTATION

NORTH ABUTMENT ELEVATION & SECTIONS
STRUCTURE NO. 090-0183

SHEET S2-32 OF S2-47 SHEETS

F.A.P. RTE.	SECTION	COUNTY	TOTAL SHEETS	SHEET NO.
VAR.	13 (HVB, HB-3) BR-1;R	TAZEWELL	1173	752
		CONTRACT NO. 68C55		
		ILLINOIS	FED. AID PROJECT	

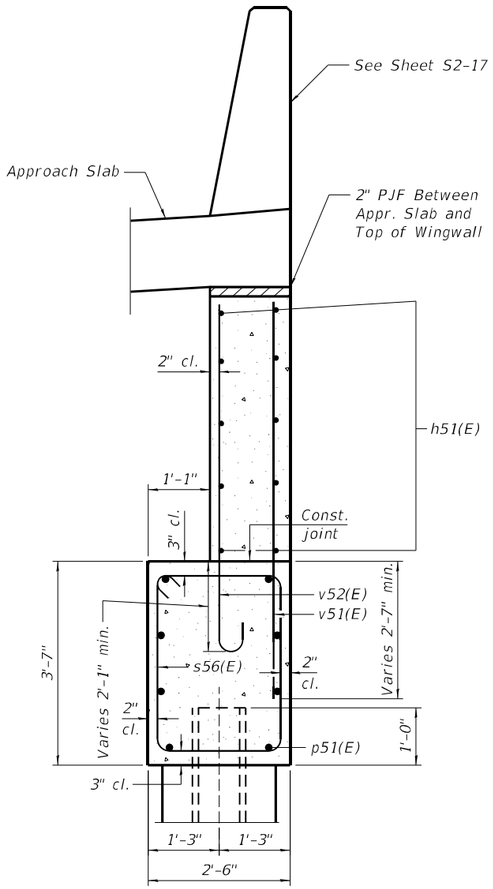

SECTION D-D

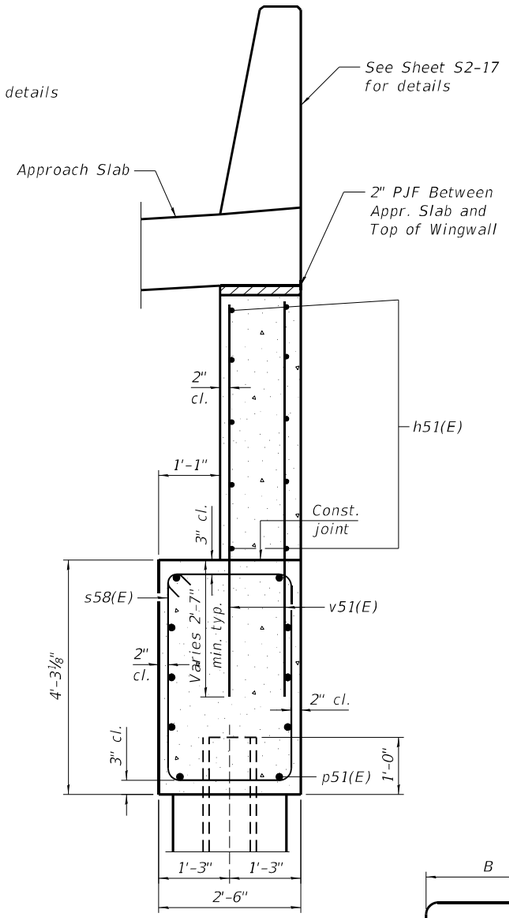

SECTION G-G

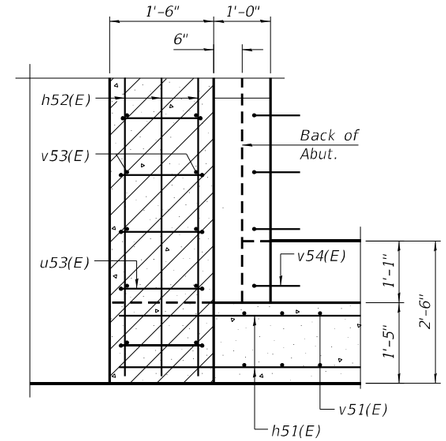

SECTION E-E

(Shown for east wingwall, mirror image for west wingwall)

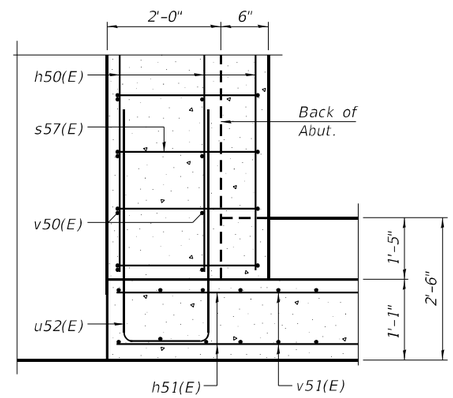

SECTION F-F

(Shown for east wingwall, mirror image for west wingwall)

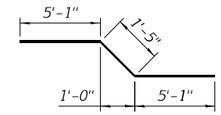

BAR p52(E)

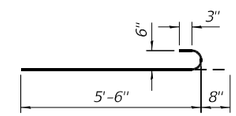

BAR v52(E)

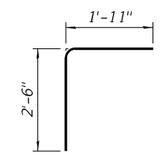

BAR v54(E)

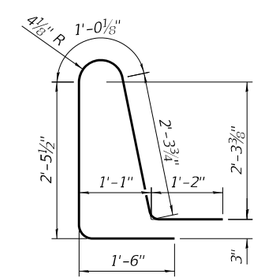

BAR d51(E)

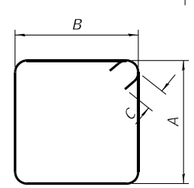

BAR s50(E) thru s56(E), & s58(E)

NORTH ABUTMENT BILL OF MATERIAL

Bar	No.	Size	Length	Shape
d51(E)	4	#5	8'-6"	
h50(E)	14	#4	28'-2"	
h51(E)	20	#4	24'-10"	
h52(E)	10	#5	30'-0"	
p50(E)	5	#8	18'-1"	
p51(E)	18	#7	26'-11"	
p52(E)	5	#8	11'-7"	
p53(E)	7	#8	29'-8"	
p54(E)	5	#8	25'-10"	
p55(E)	10	#8	18'-10"	
p56(E)	5	#8	13'-6"	
p57(E)	2	#8	32'-10"	
s50(E)	20	#5	18'-7"	
s51(E)	20	#5	17'-7"	
s52(E)	1	#5	18'-8"	
s53(E)	2	#5	19'-9"	
s54(E)	23	#5	18'-9"	
s55(E)	20	#5	17'-9"	
s56(E)	31	#4	11'-7"	
s57(E)	55	#5	6'-2"	
s58(E)	31	#4	12'-11"	
u50(E)	9	#6	13'-8"	
u51(E)	9	#4	7'-11"	
u52(E)	10	#4	10'-0"	
u53(E)	58	#5	3'-6"	
v50(E)	110	#5	6'-7"	
v51(E)	114	#5	6'-0"	
v52(E)	38	#6	6'-2"	
v53(E)	116	#5	3'-1"	
v54(E)	55	#5	4'-5"	
Structure Excavation			Cu. Yd.	184
Concrete Structures			Cu. Yd.	86.9
Concrete Encasement			Cu. Yd.	7.3
Reinforcement Bars, Epoxy Coated			Pound	9,550
Furnishing Steel Piles HP12x53			Foot	1,360
Driving Piles			Foot	1,360
Test Pile Steel HP12x53			Each	1
Pile Shoes			Each	21
Granular Backfill for Structures			Cu. Yd.	130
Concrete Sealer			Sq. Ft.	612
Geocomposite Wall Drain			Sq. Yd.	91
Pipe Underdrains for Structures 4"			Foot	103

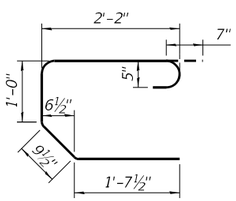

BAR s57(E)

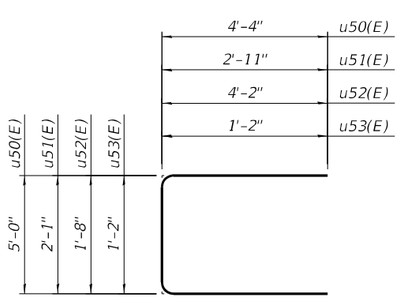

BAR u50(E) thru u53(E)

DIMENSIONS

Bar	A	B	C
s50(E)	3'-8"	5'-2"	5½"
s51(E)	3'-2"	5'-2"	5½"
s52(E)	3'-8½"	5'-2"	5½"
s53(E)	4'-3"	5'-2"	5½"
s54(E)	3'-9"	5'-2"	5½"
s55(E)	3'-3"	5'-2"	5½"
s56(E)	3'-3"	2'-2"	4½"
s58(E)	3'-11"	2'-2"	4½"

NOTES:

1. Hatched area to be poured separately after superstructure falsework has been removed and after approach slab side formwork has been removed.
2. Quantity of concrete in hatched area included with Concrete Superstructure on sheet S2-16.
3. Space reinforcement in cap to miss anchor bolts.
4. Pour steps monolithically with cap.
5. For details of piles and Concrete Encasement, see sheet S2-44.
6. The top of back wall and approach slab seat shall have a constant slope determined from the control points shown.
7. Concrete Sealer shall be applied to the bearing seats and front faces of the hatched block, back wall, and abutment cap.
8. The 2" PJF shall be included with the cost of Concrete Structures. The PJF should be per Article 1051.09 of the standard specifications, and bonded to wingwall with suitable adhesive as recommended by supplier.

N. ABUT. PILE DATA

Type: HP 12x53 with pile shoes
Nominal Required Bearing: 418 kips
Factored Resistance Available: 230 kips
Est. Length: 68
No. Production Piles: 20
No. Test Piles: 1

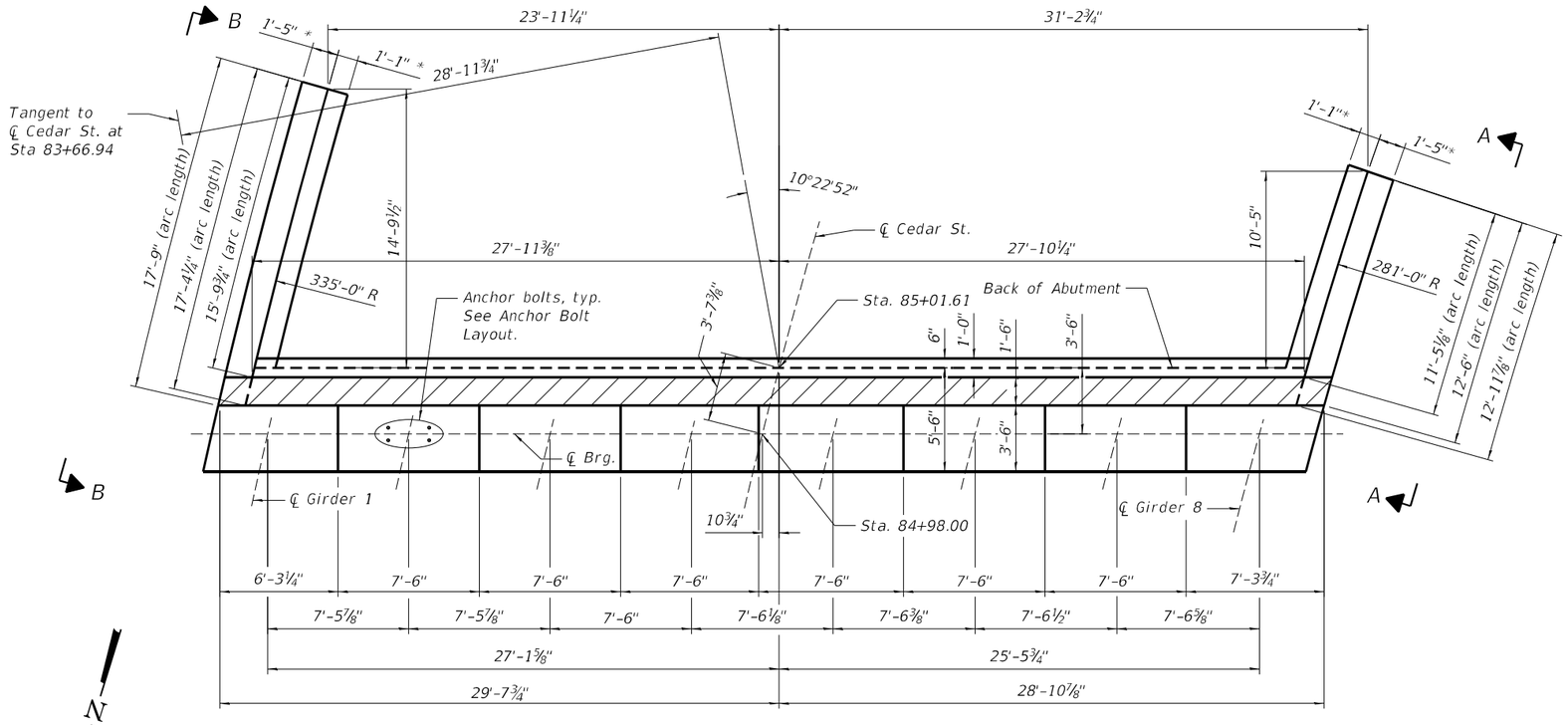

TOP VIEW

* Radial

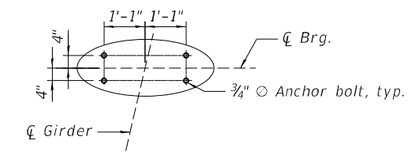

ANCHOR BOLT LAYOUT

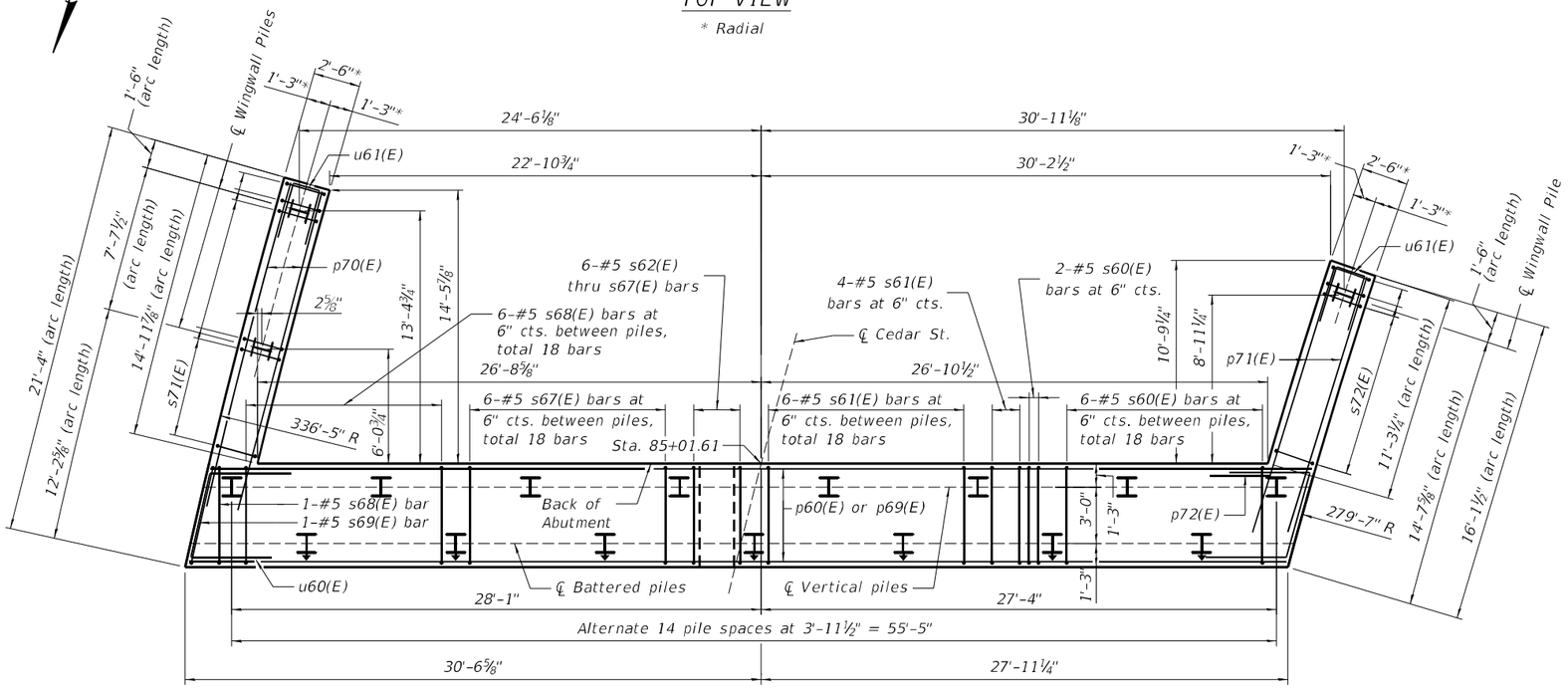

PILE CAP PLAN

NOTES

1. For View A-A and View B-B, see Sheet S2-35.
2. For pile data, bill of material and bar bending details, see Sheet S2-36.

INFRASTRUCTURE ENGINEERING INCORPORATED	USER NAME = DLamb	DESIGNED - PK	REVISED -	STATE OF ILLINOIS DEPARTMENT OF TRANSPORTATION	SOUTH ABUTMENT PLANS STRUCTURE NO. 090-0183	F.A.P. RTE.	SECTION	COUNTY	TOTAL SHEETS	SHEET NO.
		CHECKED - SPK	REVISED -			VAR.	13 (HVB, HB-3) BR-1;R	TAZEWELL	1173	754
	PLOT SCALE = 0.1667 ' / in.	DRAWN - TY	REVISED -					CONTRACT NO. 68C55		
	PLOT DATE = 6/6/2023	CHECKED - PK	REVISED -		SHEET S2-34 OF S2-47 SHEETS		ILLINOIS	FED. AID PROJECT		

MODEL: Default
FILE NAME: pw:\\mpw-uscow.bentley.com:mb-uscow-pw03\Documents\Chicago_IL\01 Projects\179740 IDOT Cedar-Sixth Phase 5 CADD\CAD Sheets\Main St. Bridge Sheets\0090183-68C55-034-SAbut1.dgn

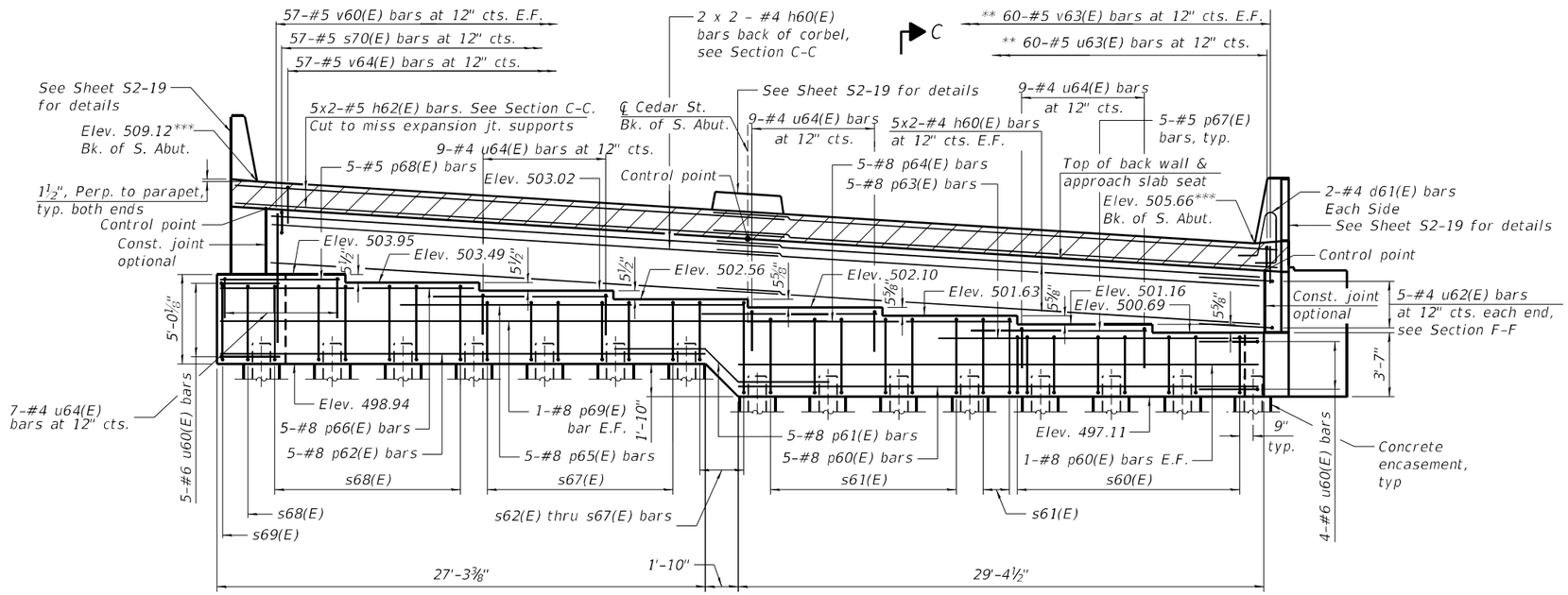

ELEVATION

** Spaced to miss expansion joint supports or members according to the approved shop drawings and as approved by the Engineer.

*** Prior to grinding

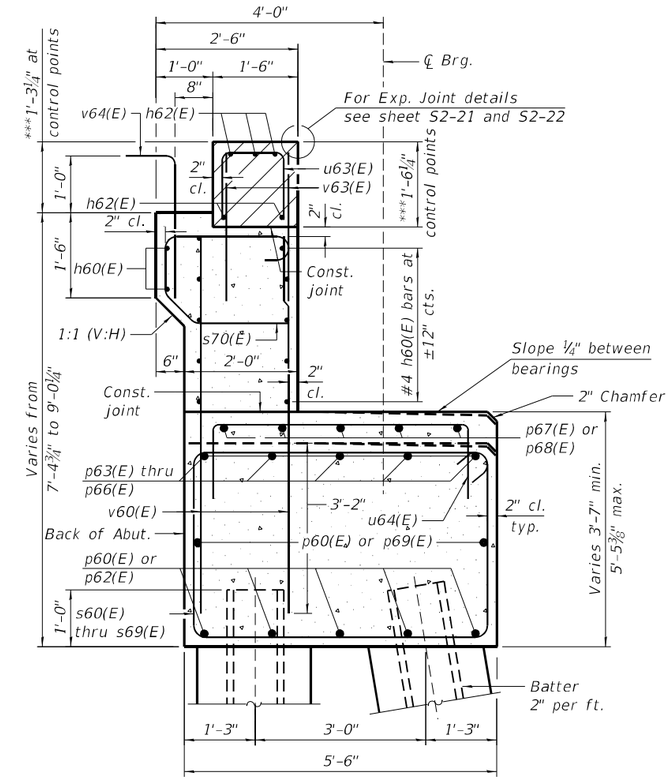

SECTION C-C

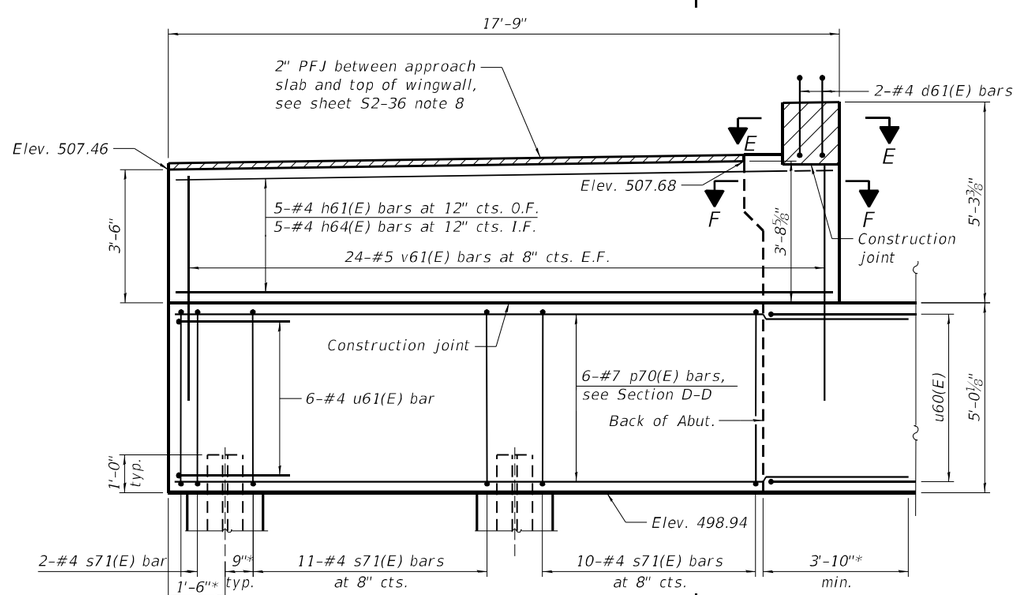

VIEW B-B

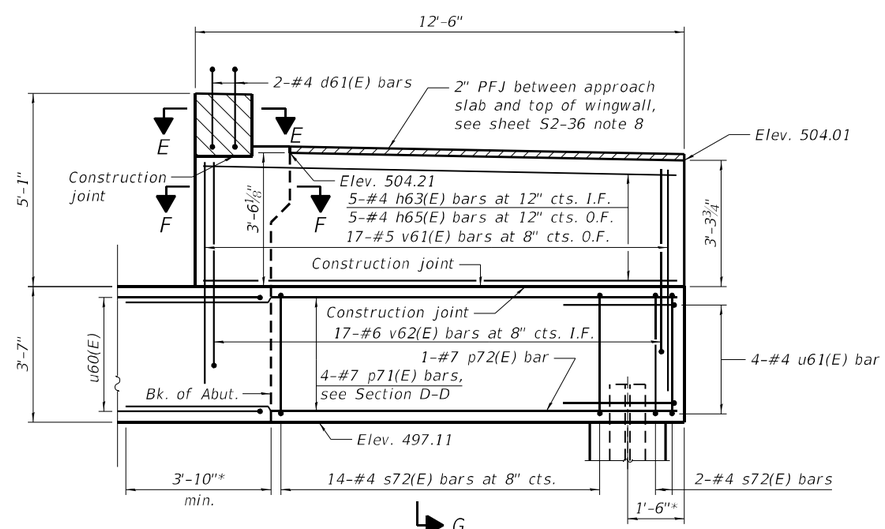

VIEW A-A

* Arc length measured along front face

NOTE:

For Sections D-D, E-E, F-F, G-G, bill of material, and bar bending details, see Sheet S2-36.

USER NAME = DLamb	DESIGNED - PK	REVISED -	STATE OF ILLINOIS DEPARTMENT OF TRANSPORTATION
	CHECKED - SPK	REVISED -	
PLOT SCALE = 0.1667 ' / in.	DRAWN - TY	REVISED -	
PLOT DATE = 8/6/2023	CHECKED - PK	REVISED -	

INFRASTRUCTURE ENGINEERING | INCORPORATED

SOUTH ABUTMENT DETAILS
STRUCTURE NO. 090-0183

SHEET S2-35 OF S2-47 SHEETS

F.A.P. RTE.	SECTION	COUNTY	TOTAL SHEETS	SHEET NO.
VAR.	13 (HVB, HB-3) BR-1;R	TAZEWELL	1173	755
		CONTRACT NO. 68C55		
		ILLINOIS FED. AID PROJECT		

MODEL: Default
FILE NAME: pw:\\ms-ipw.bentley.com:ms-ipw-03\Documents\Chicago_IL\01 Projects\179740 IDOT Cedar\Sext PH15.0 CADD\CAD Sheets\Main St. Bridge Sheets\0090183-68C55-S4but2.dgn

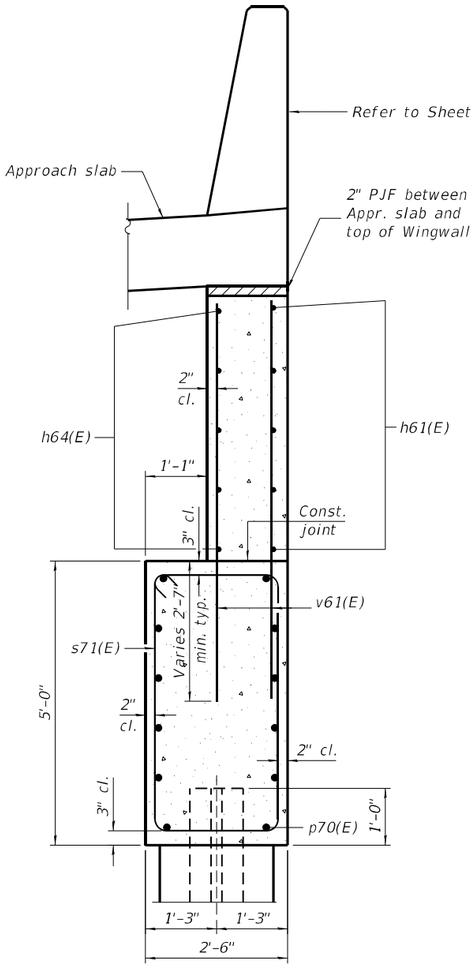

SECTION D-D

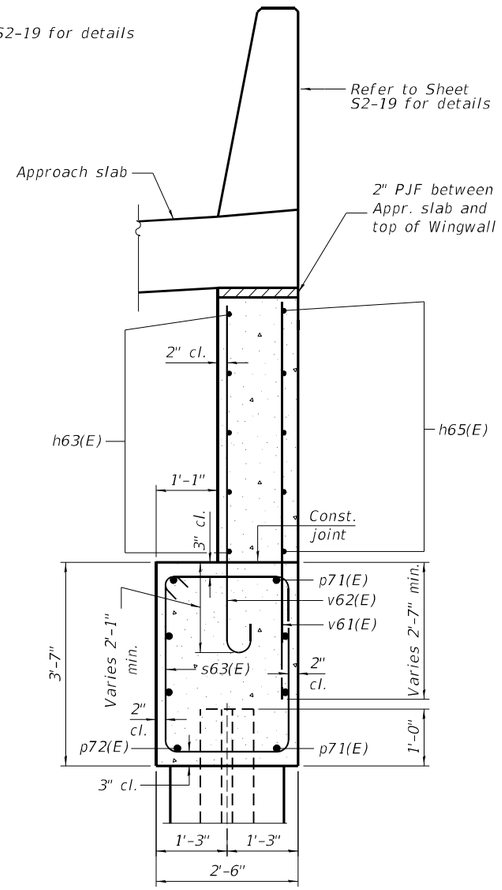

SECTION G-G

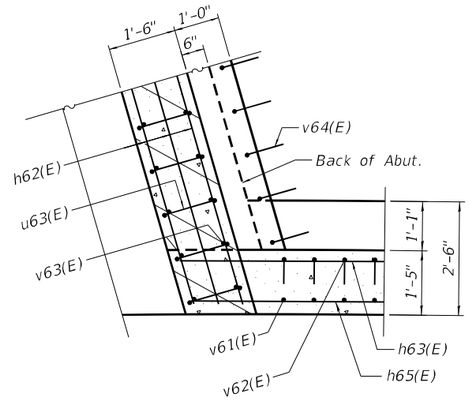

SECTION E-E

(Shown for west wingwall, similar for east wingwall)

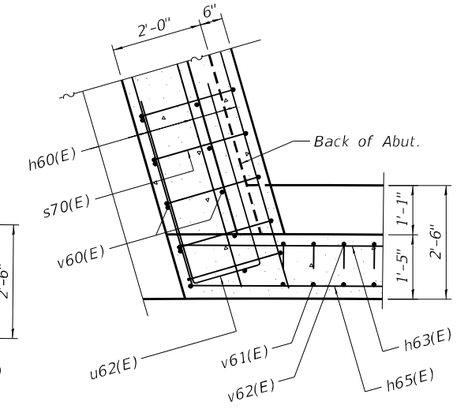

SECTION F-F

(Shown for west wingwall, similar for east wingwall)

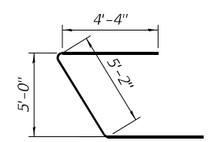

BAR u60(E)

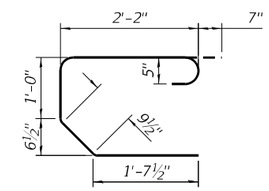

BAR s70(E)

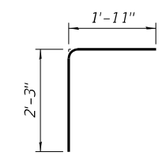

BAR v64(E)

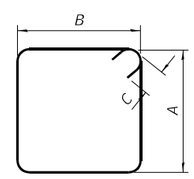

BAR s60(E) thru s69(E), s71(E), s72(E)

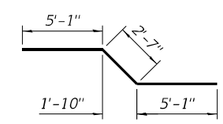

BAR p61(E)

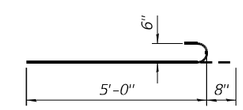

BAR v62(E)

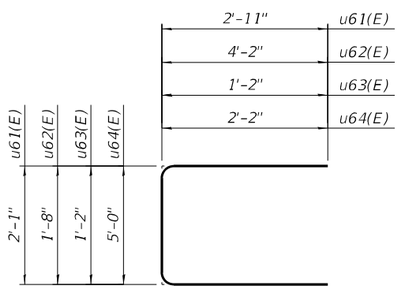

BAR u61(E) thru u64(E)

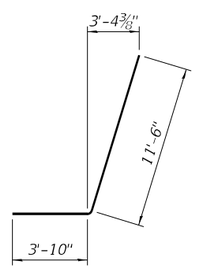

BAR p72(E)

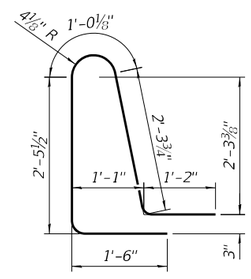

BAR d61(E)

DIMENSIONS

Bar	A	B	C
s60(E)	3'-3"	5'-2"	5½"
s61(E)	4'-2"	5'-2"	5½"
s62(E)	5'-1½"	5'-2"	5½"
s63(E)	4'-9"	5'-2"	5½"
s64(E)	4'-4½"	5'-2"	5½"
s65(E)	4'-0"	5'-2"	5½"
s66(E)	3'-7½"	5'-2"	5½"
s67(E)	3'-3½"	5'-2"	5½"
s68(E)	4'-2½"	5'-2"	5½"
s69(E)	4'-2½"	5'-3½"	5½"
s71(E)	4'-6"	2'-2"	4½"
s72(E)	3'-1"	2'-2"	4½"

NOTES

1. Hatched area to be poured separately after superstructure falsework has been removed and after approach slab side formwork has been removed.
2. Quantity of concrete in hatched area included with Concrete Superstructure on sheet S2-16.
3. Space reinforcement in cap to miss anchor bolts.
4. Pour steps monolithically with cap.
5. For details of piles and Concrete Encasement, see sheet S2-44.
6. The top of back wall and approach slab seat shall have a constant slope determined from the control points shown.
7. Concrete Sealer shall be applied to the bearing seats and front faces of the hatched block, back wall, and abutment cap.
8. The 2" PJF shall be included with the cost of Concrete Structures. The PJF should be per Article 1051.09 of the standard specifications, and bonded to wingwall with suitable adhesive as recommended by supplier.

SOUTH ABUTMENT BILL OF MATERIAL

Bar	No.	Size	Length	Shape
d61(E)	4	#5	8'-6"	
h60(E)	24	#4	29'-4"	
h61(E)	5	#4	17'-5"	
h62(E)	10	#5	30'-11"	
h63(E)	5	#4	12'-7"	
h64(E)	5	#4	17'-0"	
h65(E)	5	#4	12'-2"	
p60(E)	7	#8	29'-3"	
p61(E)	5	#8	12'-9"	
p62(E)	5	#8	27'-2"	
p63(E)	5	#8	18'-1"	
p64(E)	5	#8	14'-11"	
p65(E)	5	#8	19'-3"	
p66(E)	5	#8	14'-3"	
p67(E)	15	#5	9'-11"	
p68(E)	5	#5	6'-10"	
p69(E)	2	#8	33'-11"	
p70(E)	12	#7	19'-5"	
p71(E)	7	#7	14'-7"	
p72(E)	1	#7	15'-5"	
s60(E)	20	#5	17'-9"	
s61(E)	22	#5	19'-7"	
s62(E)	1	#5	21'-6"	
s63(E)	1	#5	20'-9"	
s64(E)	1	#5	20'-0"	
s65(E)	1	#5	19'-3"	
s66(E)	1	#5	18'-6"	
s67(E)	19	#5	17'-10"	
s68(E)	19	#5	19'-8"	
s69(E)	1	#5	19'-11"	
s70(E)	57	#5	6'-2"	
s71(E)	23	#4	14'-1"	
s72(E)	16	#4	11'-3"	
u60(E)	9	#6	13'-10"	
u61(E)	2	#4	7'-11"	
u62(E)	10	#4	10'-0"	
u63(E)	60	#5	3'-6"	
u64(E)	34	#4	9'-4"	
v60(E)	114	#5	6'-7"	
v61(E)	65	#5	6'-3"	
v62(E)	17	#6	5'-8"	
v63(E)	120	#5	2'-4"	
v64(E)	57	#5	4'-2"	
Structure Excavation			Cu. Yd.	158
Concrete Structures			Cu. Yd.	84.9
Concrete Encasement			Cu. Yd.	6.3
Reinforcement Bars, Epoxy Coated			Pound	9,070
Furnishing Steel Piles HP12x53			Foot	1,020
Driving Piles			Foot	1,020
Test Pile Steel HP12x53			Each	1
Pile Shoes			Each	18
Granular Backfill for Structures			Cu. Yd.	113
Concrete Sealer			Sq. Ft.	642
Geocomposite Wall Drain			Sq. Yd.	52
Pipe Underdrains for Structures 4"			Foot	76

S. ABUT. PILE DATA

Type: HP 12x53 with pile shoes
Nominal Required Bearing: 418 kips
Factored Resistance Available: 230 kips
Est. Length: 60 feet
No. Production Piles: 17
No. Test Piles: 1

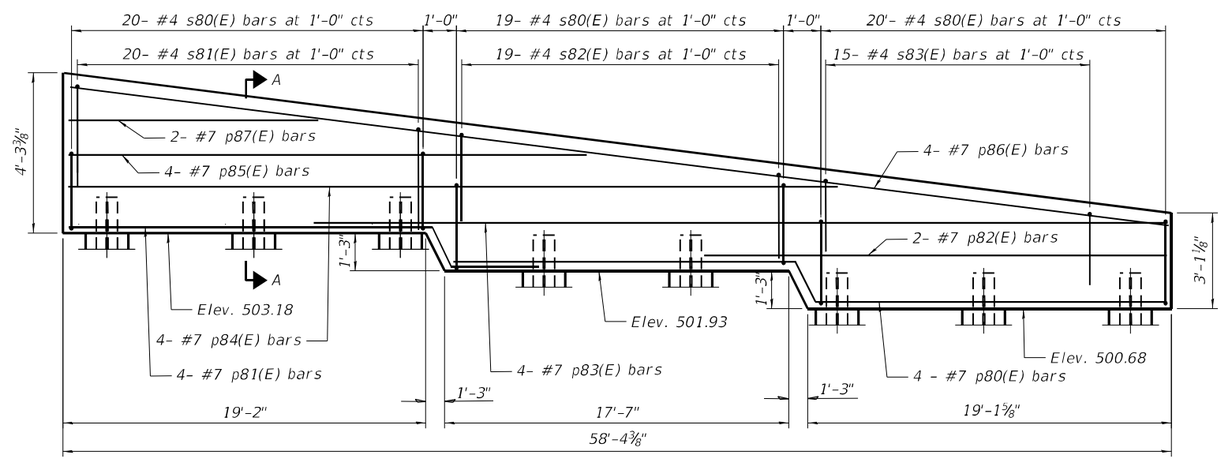

NORTH ELEVATION

(Looking south - All dimensions are along ℄ of pile bent)

N

PILE DATA

Type: HP12X53 with pile shoes
Nominal Required Bearing: 236 kips
Factored Resistance Available: 130 kips
Estimated Pile Length: 57 feet
Number of Production Piles: 7
Number of Test Piles: 1

BILL OF MATERIAL

Bar	No.	Size	Length	Shape
p80(E)	4	#7	38'-9"	
p81(E)	4	#7	27'-2"	
p82(E)	2	#7	26'-2"	
p83(E)	4	#7	45'-5"	
p84(E)	4	#7	40'-11"	
p85(E)	4	#7	28'-4"	
p86E)	4	#7	58'-7"	
p87E)	2	#7	13'-0"	
s80(E)	59	#4	10'-5"	
s81(E)	20	#4	7'-10"	
s82(E)	19	#4	7'-4"	
s83(E)	15	#4	6'-10"	
Concrete Structures			Cu. Yd.	19.9
Concrete Encasement			Cu. Yd.	2.8
Pile Shoes			Each	8
Reinforcement Bars, Epoxy Coated			Pound	2,800
Furnishing Steel Piles HP12x53			Foot	399
Driving Piles			Foot	399
Test Pile Steel HP12x53			Each	1

Notes:

Cost of excavation for approach bent included with Concrete Structures.

For details of piles see sheet S2-43.

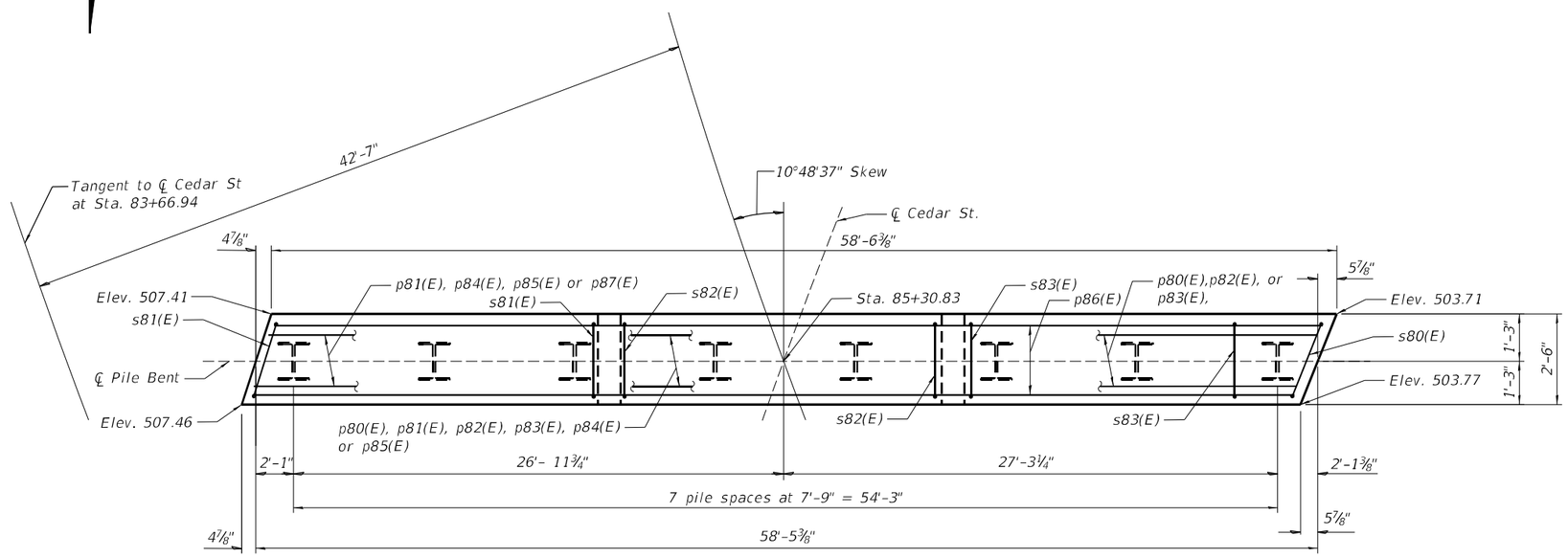

TOP PLAN

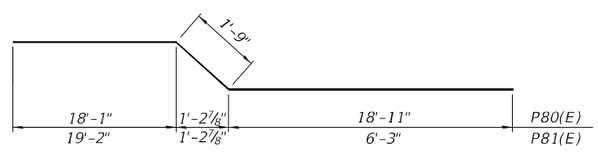

BARS P80(E) AND P81(E)

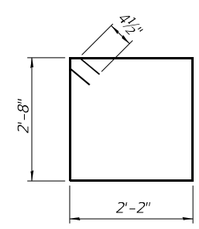

BAR s80(E)

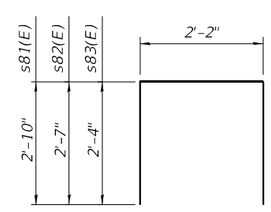

BAR s81(E), s82(E), & s83(E)

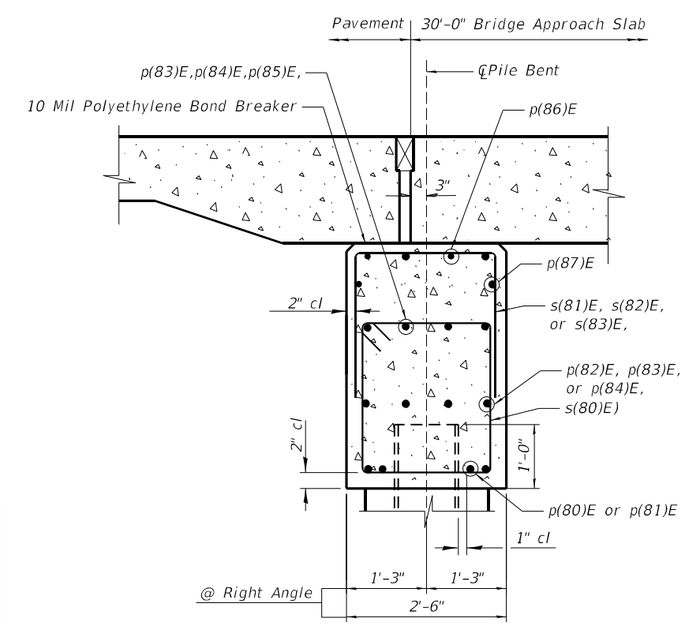

SECTION A-A

MODEL: Default
FILE NAME: pw:\\ms-ussc.bentley.com:ms-ussc-pw-03\Documents\Chicago 1\01 Projects\179740 IDOT Cedar-Sixt Rhtl5.0 CADD\CAD Sheets\Main St. Bridge Sheets\0090183-68C55-037-SAbut4.dgn

INFRASTRUCTURE ENGINEERING INCORPORATED	USER NAME = DLamb	DESIGNED - SPK	REVISED -	STATE OF ILLINOIS DEPARTMENT OF TRANSPORTATION	SOUTH APPROACH BENT STRUCTURE NO. 090-0183
		CHECKED - PK	REVISED -		
	PLOT SCALE = 99.9996 ' / in.	DRAWN - CLL	REVISED -		
	PLOT DATE = 6/6/2023	CHECKED - SPK	REVISED -		SHEET S2-37 OF S2-47 SHEETS

F.A.P. RTE.	SECTION	COUNTY	TOTAL SHEETS	SHEET NO.
VAR.	13 (HVB, HB-3) BR-1;R	TAZEWELL	1173	757
		CONTRACT NO. 68C55		
		ILLINOIS	FED. AID PROJECT	

PILE DATA

Type: Steel HP 12x53 with pile shoes
Nominal Required Bearing: 418 kips
Factored Resistance Available: 230 kips
Est. Length: 43 ft
No. Production Piles: 23
No. Test Piles: 1

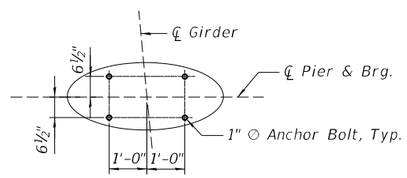

ANCHOR BOLT LAYOUT

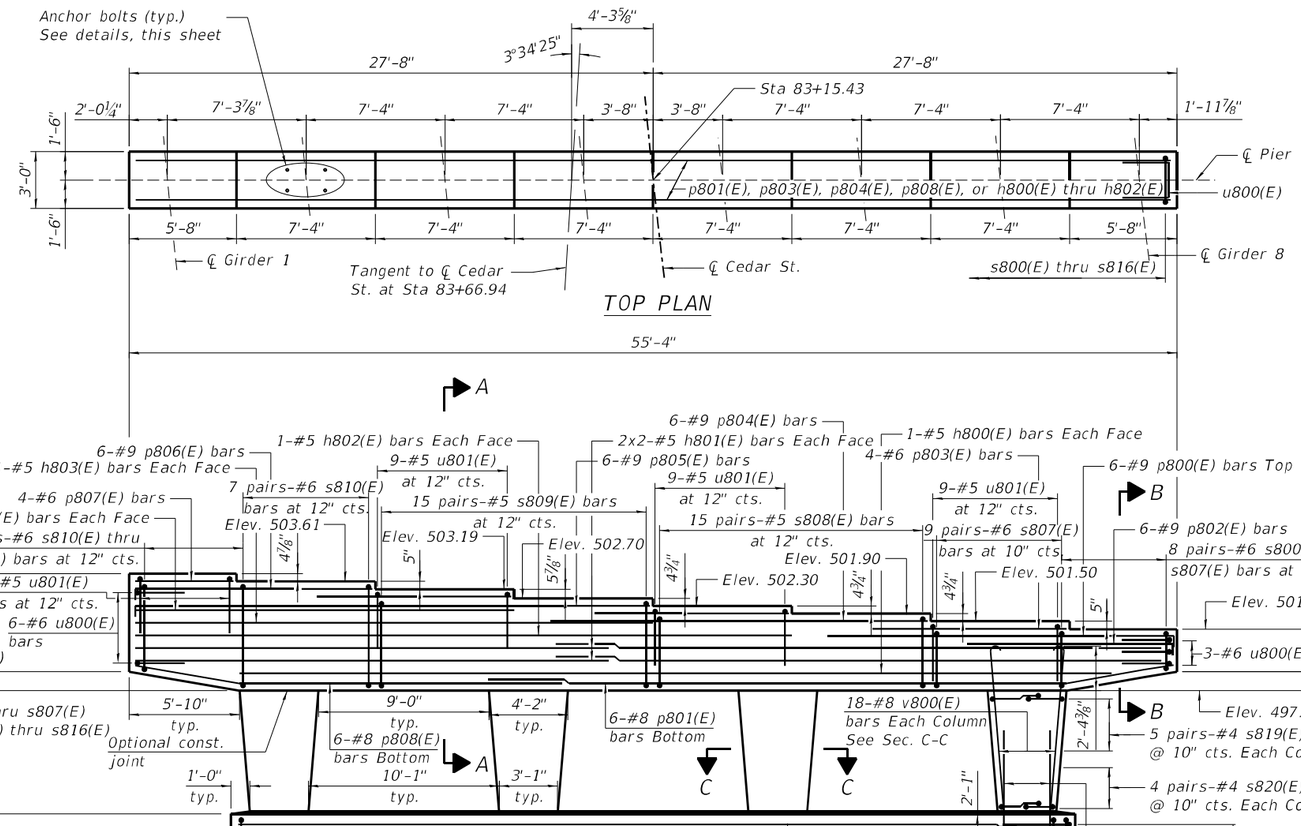

TOP PLAN

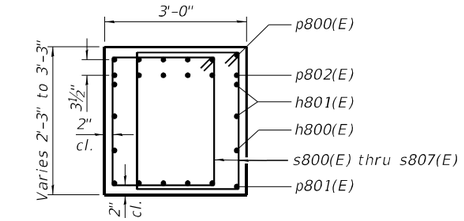

SECTION B-B

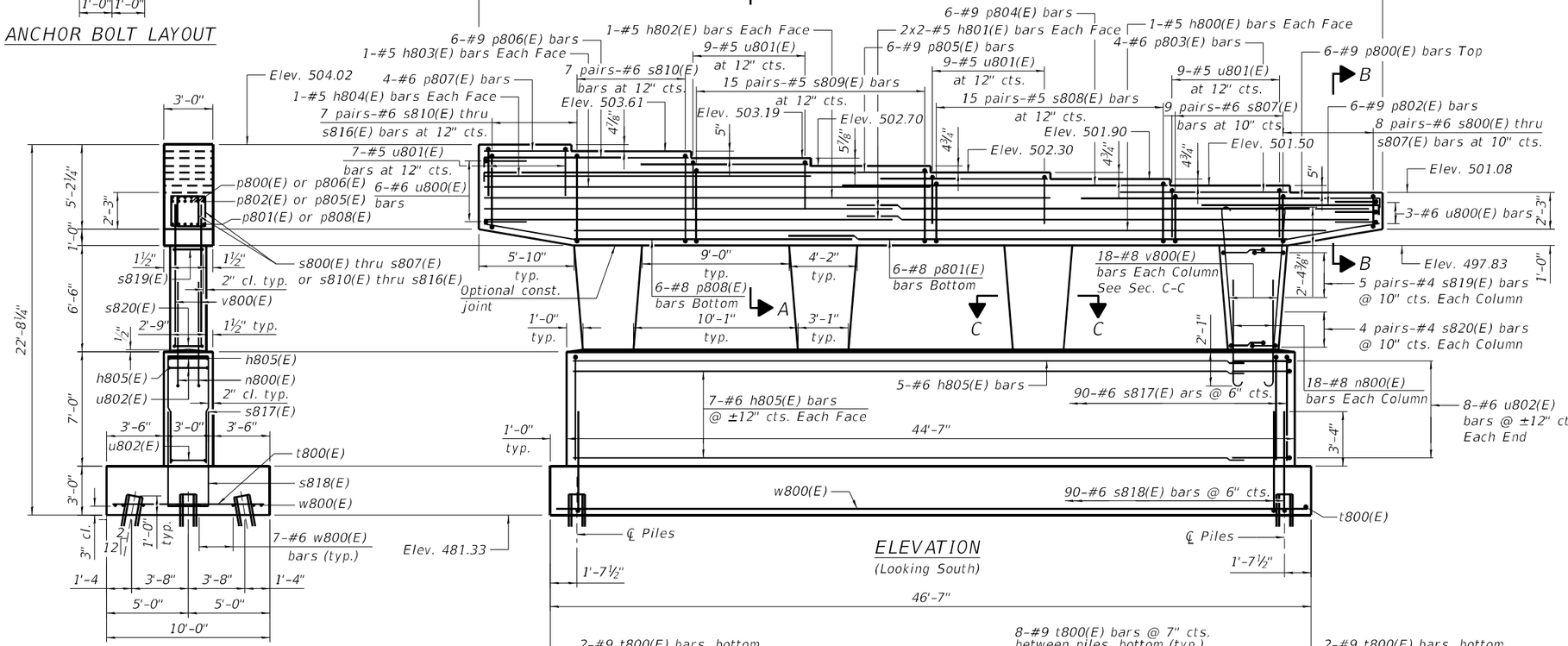

ELEVATION
(Looking South)

END VIEW

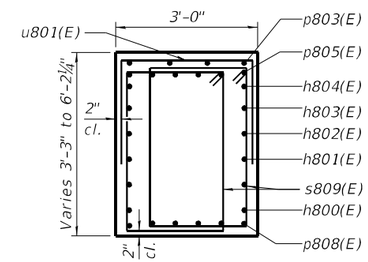

SECTION A-A

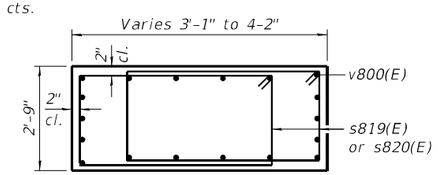

SECTION C-C

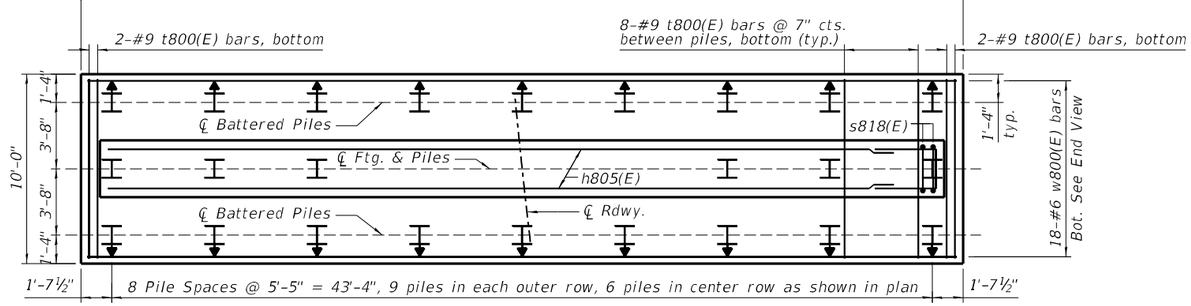

FOOTING PLAN

MIN. BAR LAP

#4 = 1'-4" (Hor. U-bar)
#5 = 3'-7"
#8 = 7'-2"

NOTES

1. Space reinforcement in cap to miss anchor bolts.
2. Pour steps monolithically with cap.
3. For details of piles, see sheet S2-44.
4. For bar bending details and Bill of Material, see S2-39.
5. Concrete Sealer shall be applied to the exposed area of the cap, columns, and crashwall.

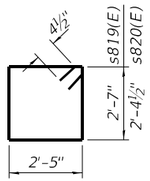

BARS s819(E) & s820(E)

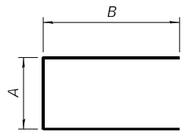

BARS u800(E), u801E), & u802(E)

A & B DIMENSIONS

Bar	A	B
u800(E)	2'-6"	3'-10"
u801(E)	2'-8"	2'-9"
u802(E)	2'-6"	3'-4"

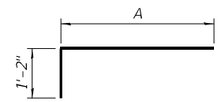

BARS p800(E), p802(E), p805(E), & p806(E)

A DIMENSIONS

Bar	A
p800(E)	18'-3"
p802(E)	10'-11"
p805(E)	27'-4"
p806(E)	12'-8"

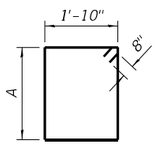

BARS s800(E) THRU s816(E)

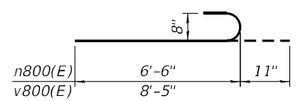

BARS n800(E) & v800(E)

A DIMENSIONS

Bar	A
s800(E)	1'-11"
s801(E)	2'-1"
s802(E)	2'-3"
s803(E)	2'-5"
s804(E)	2'-7"
s805(E)	2'-8"
s806(E)	2'-9"
s807(E)	2'-11"
s808(E)	3'-9"
s809(E)	4'-7"
s810(E)	5'-6"
s811(E)	5'-4"
s812(E)	5'-2"
s813(E)	5'-0"
s814(E)	4'-10"
s815(E)	4'-8"
s816(E)	4'-6"

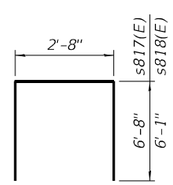

BARS s817(E) & s818(E)

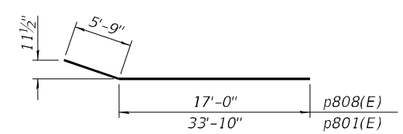

BARS p801(E) & p808(E)

PIER 1
BILL OF MATERIAL

Bar	No.	Size	Length	Shape
h800(E)	2	#5	46'-1"	
h801(E)	8	#5	29'-4"	
h802(E)	2	#5	34'-10"	
h803(E)	2	#5	27'-6"	
h804(E)	2	#5	20'-2"	
h805(E)	19	#6	44'-3"	
n800(E)	72	#8	7'-5"	
p800(E)	6	#9	19'-5"	
p801(E)	6	#8	39'-7"	
p802(E)	6	#9	12'-1"	
p803(E)	12	#6	10'-3"	
p804(E)	6	#9	19'-11"	
p805(E)	6	#9	28'-6"	
p806(E)	6	#9	13'-10"	
p807(E)	4	#6	5'-4"	
p808(E)	6	#8	22'-9"	
s800(E)	2	#6	8'-10"	
s801(E)	2	#6	9'-2"	
s802(E)	2	#6	9'-6"	
s803(E)	2	#6	9'-10"	
s804(E)	2	#6	10'-2"	
s805(E)	2	#6	10'-4"	
s806(E)	2	#6	10'-6"	
s807(E)	20	#6	10'-10"	
s808(E)	30	#5	12'-6"	
s809(E)	30	#5	14'-2"	
s810(E)	16	#6	16'-0"	
s811(E)	2	#6	15'-8"	
s812(E)	2	#6	15'-4"	
s813(E)	2	#6	15'-0"	
s814(E)	2	#6	14'-8"	
s815(E)	2	#6	14'-4"	
s816(E)	2	#6	14'-0"	
s817(E)	90	#6	16'-0"	
s818(E)	90	#6	14'-10"	
s819(E)	40	#4	10'-9"	
s820(E)	32	#4	10'-4"	
t800(E)	68	#9	9'-8"	
u800(E)	9	#6	10'-2"	
u801(E)	34	#5	8'-2"	
u802(E)	16	#6	9'-2"	
v800(E)	72	#8	9'-4"	
w800(E)	18	#6	46'-3"	
Structure Excavation			Cu. Yd.	121
Concrete Structures			Cu. Yd.	124.3
Reinforcement Bars, Epoxy Coated			Pound	18,950
Furnishing Steel Piles HP12x53			Foot	989
Driving Piles			Foot	989
Test Pile Steel HP12x53			Each	1
Pile Shoes			Each	24
Concrete Sealer			Sq. Ft.	1,268

PILE DATA

Type: Steel HP 12x53 with pile shoes
Nominal Required Bearing: 418 kips
Factored Resistance Available: 230 kips
Est. Length: 43 ft
No. Production Piles: 23
No. Test Piles: 1

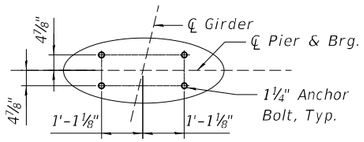

ANCHOR BOLT LAYOUT

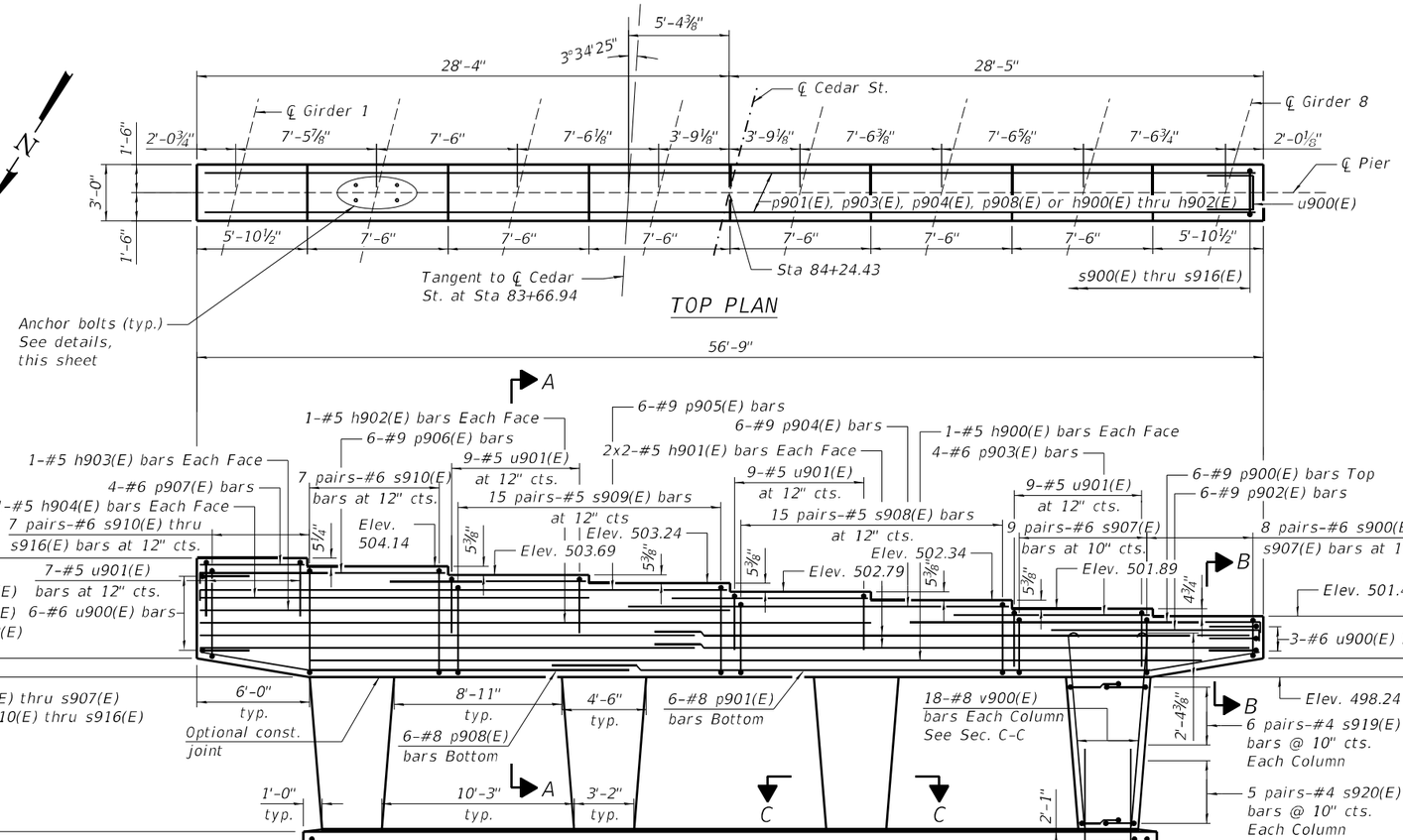

TOP PLAN

ELEVATION
(Looking South)

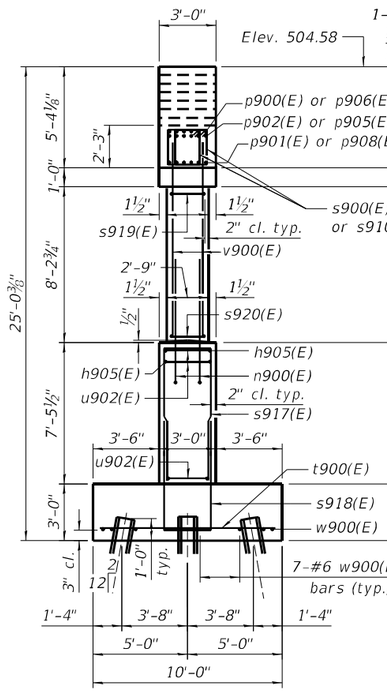

END VIEW

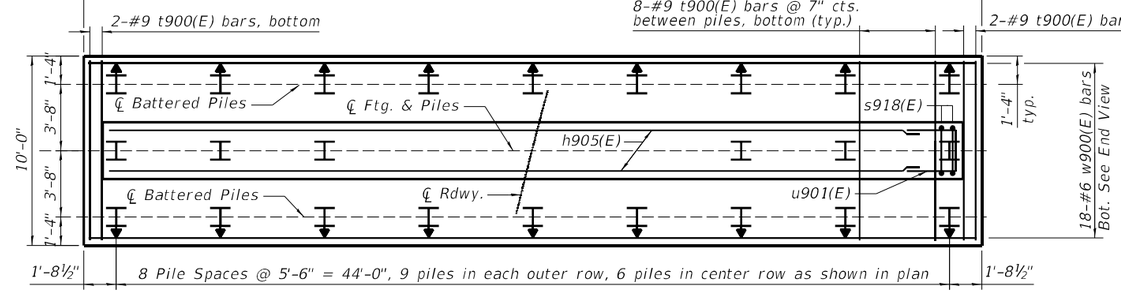

FOOTING PLAN

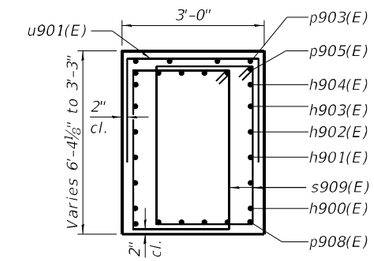

SECTION A-A

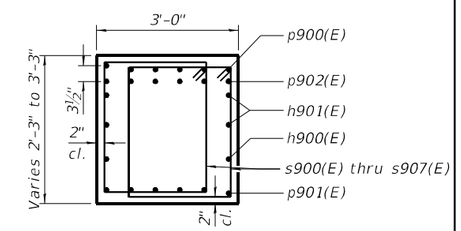

SECTION B-B

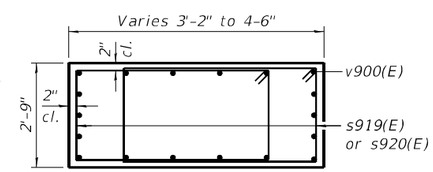

SECTION C-C

MIN. BAR LAP

#4 = 1'-4" (Hor. U-bar)
#5 = 3'-7"
#8 = 7'-2"

NOTES

1. Space reinforcement in cap to miss anchor bolts.
2. Pour steps monolithically with cap.
3. For details of piles, see sheet S2-44.
4. For bar bending details and Bill of Material, see sheet S2-41.
5. Concrete Sealer shall be applied to the exposed area of the cap, columns, and crashwall.

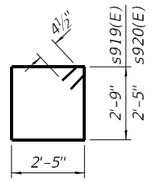

BARS s919(E) & s920(E)

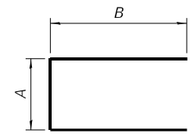

BARS u900(E), u901E), & u902(E)

A & B DIMENSIONS

Bar	A	B
u900(E)	2'-6"	3'-10"
u901(E)	2'-8"	2'-9"
u902(E)	2'-6"	3'-4"

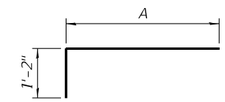

BARS p900(E), p902(E), p905(E), & p906(E)

A DIMENSIONS

Bar	A
p900(E)	18'-10"
p902(E)	11'-2"
p905(E)	28'-1"
p906(E)	13'-1"

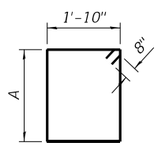

BARS s900(E) THRU s916(E)

A DIMENSIONS

Bar	A
s900(E)	1'-11"
s901(E)	2'-1"
s902(E)	2'-3"
s903(E)	2'-5"
s904(E)	2'-7"
s905(E)	2'-8"
s906(E)	2'-9"
s907(E)	2'-11"
s908(E)	3'-10"
s909(E)	4'-8"
s910(E)	5'-7"
s911(E)	5'-5"
s912(E)	5'-3"
s913(E)	5'-1"
s914(E)	4'-11"
s915(E)	4'-9"
s916(E)	4'-7"

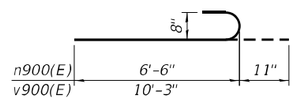

BARS n900(E) & v900(E)

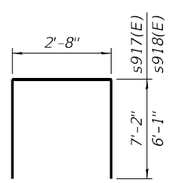

BARS s917(E) & s918(E)

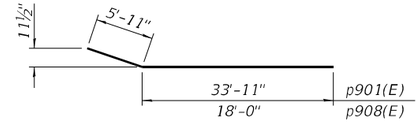

BARS p901(E) & p908(E)

PIER 2

BILL OF MATERIAL

Bar	No.	Size	Length	Shape
h900(E)	2	#5	47'-5"	
h901(E)	8	#5	30'-0"	
h902(E)	2	#5	35'-9"	
h903(E)	2	#5	28'-3"	
h904(E)	2	#5	20'-9"	
h905(E)	19	#6	45'-1"	
n900(E)	72	#8	7'-5"	
p900(E)	6	#9	20'-0"	
p901(E)	6	#8	39'-10"	
p902(E)	6	#9	12'-4"	
p903(E)	12	#6	10'-5"	
p904(E)	6	#9	20'-3"	
p905(E)	6	#9	29'-3"	
p906(E)	6	#9	14'-3"	
p907(E)	4	#6	5'-7"	
p908(E)	6	#8	23'-11"	
s900(E)	2	#6	8'-10"	
s901(E)	2	#6	9'-2"	
s902(E)	2	#6	9'-6"	
s903(E)	2	#6	9'-10"	
s904(E)	2	#6	10'-2"	
s905(E)	2	#6	10'-4"	
s906(E)	2	#6	10'-6"	
s907(E)	20	#6	10'-10"	
s908(E)	30	#5	12'-9"	
s909(E)	30	#5	14'-5"	
s910(E)	16	#6	16'-2"	
s911(E)	2	#6	15'-10"	
s912(E)	2	#6	15'-6"	
s913(E)	2	#6	15'-2"	
s914(E)	2	#6	14'-10"	
s915(E)	2	#6	14'-6"	
s916(E)	2	#6	14'-2"	
s917(E)	91	#6	17'-0"	
s918(E)	91	#6	14'-10"	
s919(E)	48	#4	11'-10"	
s920(E)	40	#4	11'-2"	
t900(E)	68	#9	9'-8"	
u900(E)	9	#6	10'-2"	
u901(E)	34	#5	8'-2"	
u902(E)	16	#6	9'-2"	
v900(E)	72	#8	11'-2"	
w900(E)	18	#6	47'-1"	
Structure Excavation			Cu. Yd.	138
Concrete Structures			Cu. Yd.	132.6
Reinforcement Bars, Epoxy Coated			Pound	19,820
Furnishing Steel Piles HP12x53			Foot	989
Driving Piles			Foot	989
Test Pile Steel HP12x53			Each	1
Pile Shoes			Each	24
Concrete Sealer			Sq. Ft.	1,374

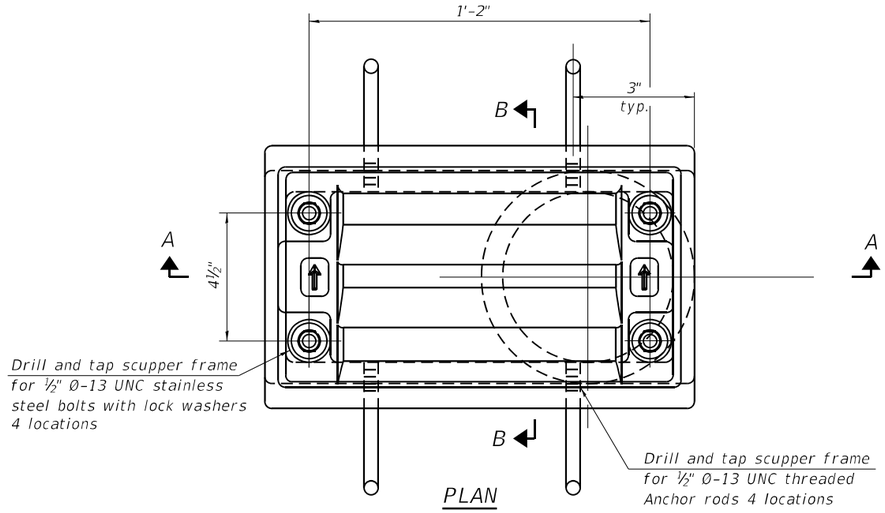

PLAN

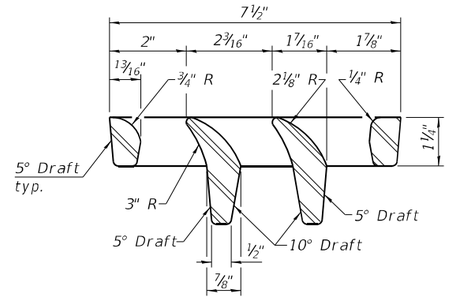

VANE GRATE DETAIL

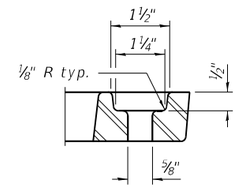

GRATE BOLT HOLE DETAIL

Notes:

All cast iron parts shall be gray iron conforming to the requirements of AASHTO M105, Class 35B and AASHTO M306.

Bolts, anchor rods, nuts and washers shall be according to ASTM A307 and shall be galvanized according to AASHTO M232. As an alternate stainless steel may be used.

Stainless steel hardware shall be according to Article 1006.29(d) of the Standard Specifications.

Structural steel weldments of equal sections and of the same configuration may be substituted for the cast iron scupper frames and downspouts; however, the scupper grates shall remain cast iron. Fillet or full penetration welds shall be used for the weldments. Details shall be submitted to the Engineer for approval.

Structural steel scupper frames and downspouts, when utilized, shall be galvanized according to AASHTO M111.

As an alternate, fiberglass may be used for downspouts according to ASTM D2996 with a short-time rupture strength hoop tensile stress of 30,000 psi min. in lieu of the cast iron or structural steel.

The Contractor shall take appropriate measures to assure that Protective Coat is not applied to the scupper.

Cost of the grate, frame, downspout, anchor rods, nuts and washers including complete installation of the scupper shall be paid for at the contract unit price for Drainage Scupper, DS-11.

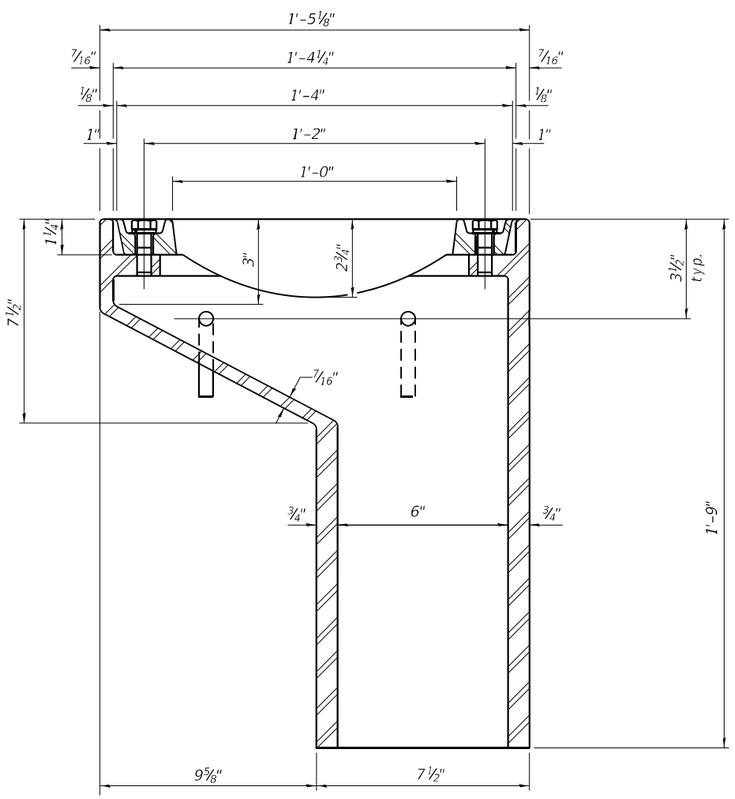

SECTION A-A

See sheet S2-15 for scupper location relative to parapet.

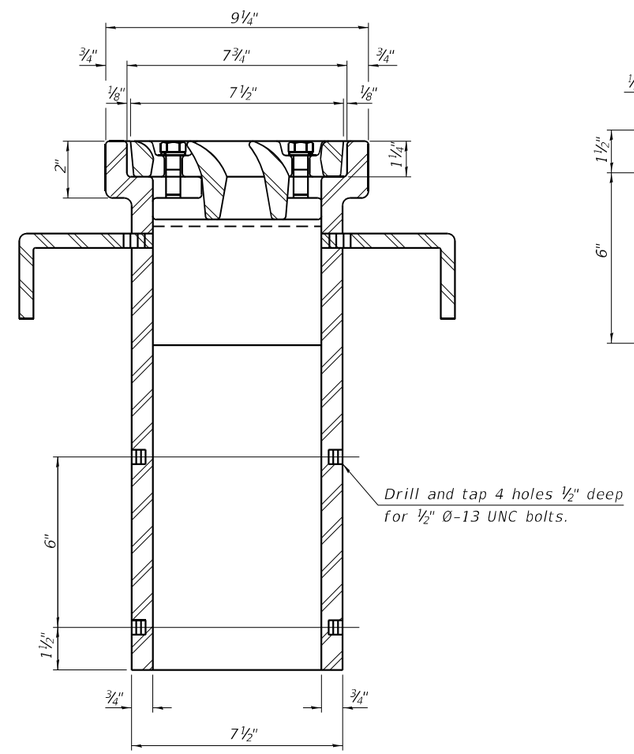

SECTION B-B

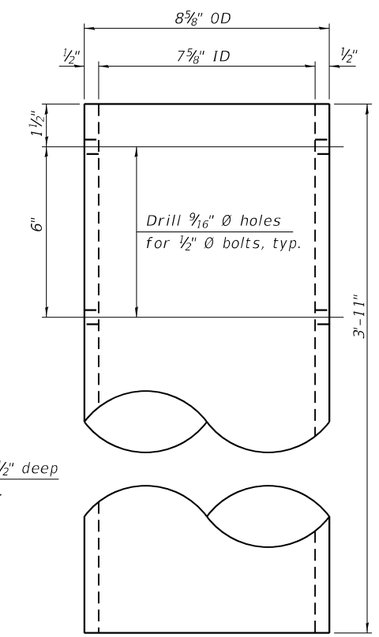

DOWNSPOUT

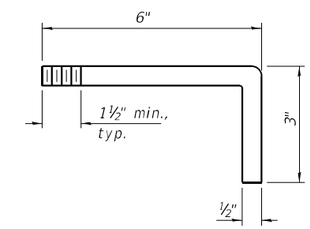

ANCHOR ROD DETAIL

BILL OF MATERIAL

ITEM	UNIT	QUANTITY
Drainage Scupper, DS-11	Each	6

Michael Baker INTERNATIONAL
200 W Adams Street
Suite 1800
Chicago, IL 60606
PH: 312.707.8770
FAX: 312.707.8804

DS-11 1-1-2020

INFRASTRUCTURE ENGINEERING | INCORPORATED

USER NAME = DLamb	DESIGNED - SPK	REVISED -	
	CHECKED - PK	REVISED -	
PLOT SCALE = 0.1667 ' / in.	DRAWN - CLL	REVISED -	
PLOT DATE = 6/6/2023	CHECKED - SPK	REVISED -	

STATE OF ILLINOIS
DEPARTMENT OF TRANSPORTATION

DRAINAGE SCUPPER, DS-11
STRUCTURE NO. 090-0183

SHEET S2-42 OF S2-47 SHEETS

F.A.P. RTE.	SECTION	COUNTY	TOTAL SHEETS	SHEET NO.
VAR.	13 (HVB, HB-3) BR-1;R	TAZEWELL	1173	762
		CONTRACT NO. 68C55		
	ILLINOIS	FED. AID PROJECT		

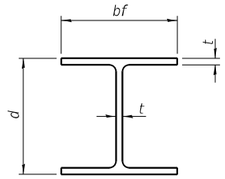

STEEL PILE TABLE

Designation	Depth d	Flange width bf	Web and Flange thickness t	Encasement diameter A
HP 14x117	14¼"	14⅞"	13/16"	30"
x102	14"	14¾"	11/16"	30"
x89	13⅞"	14¾"	⅝"	30"
x73	13⅝"	14⅝"	½"	30"
HP 12x84	12¼"	12¼"	11/16"	24"
x74	12⅛"	12¼"	⅝"	24"
x63	12"	12⅛"	½"	24"
x53	11¾"	12"	7/16"	24"
HP 10x57	10"	10¼"	9/16"	24"
x42	9¾"	10⅛"	7/16"	24"
HP 8x36	8"	8⅛"	7/16"	18"

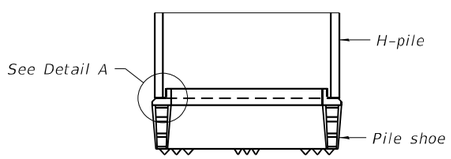

ELEVATION

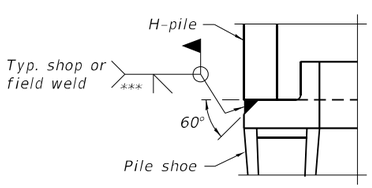

DETAIL A

SHOE ATTACHMENT

Note:
The steel H-piles shall be according to AASHTO M270 Grade 50.

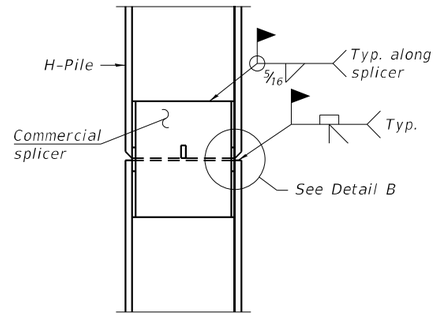

ELEVATION

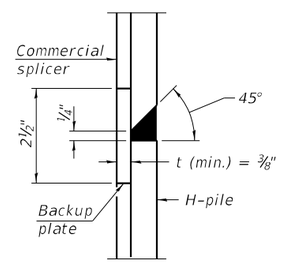

DETAIL "B"

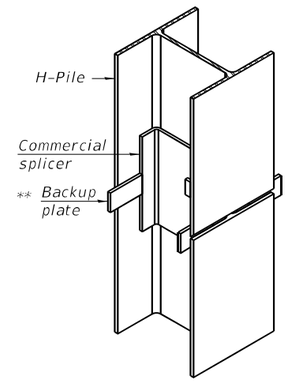

ISOMETRIC VIEW

WELDED COMMERCIAL SPLICE

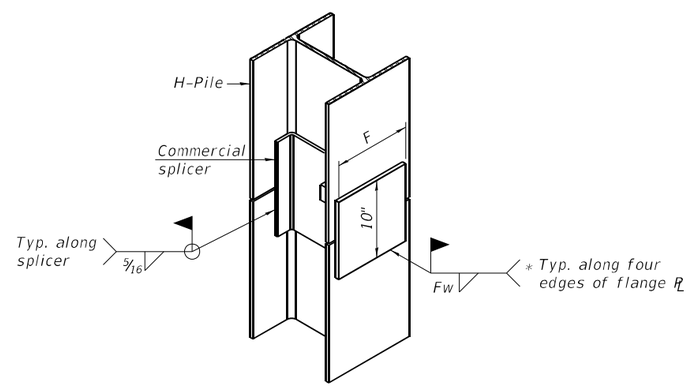

ISOMETRIC VIEW

WELDED COMMERCIAL SPLICE ALTERNATE

* Interrupt welds ¼" from end of web and/or each flange.

** Remove portions of backup plates that extend outside the flanges.

*** Weld size per pile shoe manufacturer (5/16" min.).

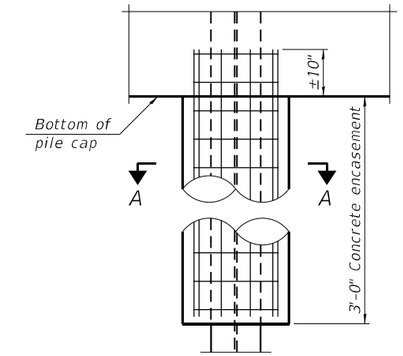

ELEVATION

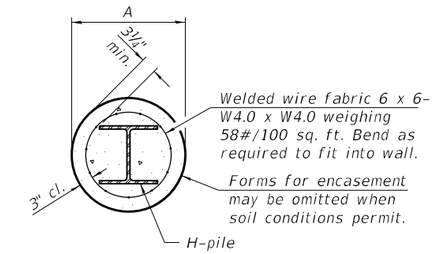

SECTION A-A

INDIVIDUAL PILE CONCRETE ENCASEMENT
(at abutments and bents only)

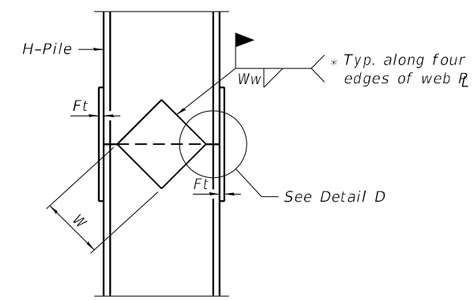

ELEVATION

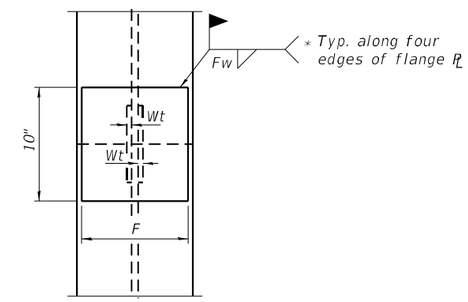

END VIEW

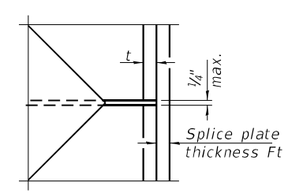

DETAIL D

Designation	F	Ft	Fw	W	Wt	Ww
HP 14x117	12½"	1"	⅞"	7¾"	⅝"	½"
x102	12½"	⅞"	¾"	7¾"	⅝"	½"
x89	12½"	¾"	11/16"	7¾"	⅝"	½"
x73	12½"	⅝"	9/16"	7¾"	⅝"	½"
HP 12x84	10"	⅞"	13/16"	6½"	⅝"	½"
x74	10"	⅞"	11/16"	6½"	⅝"	½"
x63	10"	⅝"	½"	6½"	½"	⅜"
x53	10"	⅝"	½"	6½"	½"	⅜"
HP 10x57	8"	¾"	9/16"	5¼"	½"	⅜"
x42	8"	⅝"	9/16"	5¼"	½"	⅜"
HP 8x36	7"	⅝"	7/16"	4¼"	½"	⅜"

WELDED PLATE FIELD SPLICE

F-HP 1-1-2020

BORING LOG BSB-16

Wang Engineering
wangeng@wangeng.com
1145 N Main Street
Lombard, Illinois 60148
Telephone: 630-953-9928
Fax: 630-953-9938

WEI Job No.: 707-21-01

Client: Michael Baker International
Project: Cedar Street Extension at IL Route 29
Location: Tazewell County, IL

Datum: NAVD 88
Elevation: 484.87 ft
North: 1456360.78 ft
East: 2458283.25 ft
Station: 82+66.71
Offset: 69.76' Lt

Elevation (ft)	SOIL AND ROCK DESCRIPTION	Depth (ft)	Sample No.	SPT Values (blw/6 in)	Qu (tsf)	Moisture Content (%)
484.4	6-inch thick, black SILTY CLAY LOAM --TOPSOIL--					
	Medium dense, brown SANDY GRAVEL; moist to wet --FILL-- --RDR 2--		1	5 5 5	NP	37
480.9	Very stiff to hard, brown and gray CLAY LOAM to SILTY LOAM, trace gravel --FILL-- --RDR 1 to 2--	5	2	5 4 6	2.79 B	14
			3	4 5 8	2.95 B	12
	--L_L(%)=28, P_L(%)=15-- --%Gravel=3.5-- --%Sand=26.0-- --%Silt=51.8-- --%Clay=18.7-- --A-6 (7)--	10	4	4 6 7	2.46 B	14
			5	3 7 9	2.38 B	19
		15	6	5 9 10	3.61 B	14
			7	5 11 15	4.67 B	13
		20	8	6 8 14	3.50 P	19
464.4	Stiff to very stiff, brown and dark gray SILTY CLAY LOAM, trace gravel and organic --RDR 2--		9	3 3 4	1.48 B	26
		25	10	4 4 7	2.79 B	30
459.4	Medium dense, brown SANDY GRAVEL; saturated --RDR 2 to 3-- --possible cobbles--		11	2 5 9	NP	18
455.9	Medium dense, brown fine SAND to SANDY LOAM; wet	30	12	9 4 6	NP	16
		35	13	11 10 9	NP	19
448.1	Stiff to very stiff, gray SILTY CLAY LOAM, trace to little gravel --RDR 2 to 3-- --2-inch thick sand lenses--	40	14	7 8 6	1.72 B	13
	--possible cobbles--	45	15	4 8 14	2.13 B	13
		50	16	14 13 15	2.71 B	14

GENERAL NOTES

Begin Drilling: 05-23-2019 Complete Drilling: 05-23-2019
Drilling Contractor: Wang Testing Services Drill Rig:
Driller: N&K&N Logger: F. Bozga Checked by: C. Marin
Drilling Method: 2.25" HSA to 10 ft, mud rotary thereafter, boring backfilled upon completion

WATER LEVEL DATA

While Drilling: 3.00 ft
At Completion of Drilling: 3 ft mud
Time After Drilling: NA
Depth to Water: NA
The stratification lines represent the approximate boundary between soil types; the actual transition may be gradual.

BORING LOG BSB-16

Wang Engineering
wangeng@wangeng.com
1145 N Main Street
Lombard, Illinois 60148
Telephone: 630-953-9928
Fax: 630-953-9938

WEI Job No.: 707-21-01

Client: Michael Baker International
Project: Cedar Street Extension at IL Route 29
Location: Tazewell County, IL

Datum: NAVD 88
Elevation: 484.87 ft
North: 1456360.78 ft
East: 2458283.25 ft
Station: 82+66.71
Offset: 69.76' Lt

Elevation (ft)	SOIL AND ROCK DESCRIPTION	Depth (ft)	Sample No.	SPT Values (blw/6 in)	Qu (tsf)	Moisture Content (%)
	--slow drilling from 51 feet--					
433.9	Very dense, greenish gray SHALE --RDR 4--		17	30 50/0.8"	NP	16
	--MSPT 1--	55	18	100/15"	NP	15
	--MSPT 2--		19	100/7.5"	NP	15
	--MSPT 3--	60	20	100/6"	NP	15
	--MSPT 4--		21	100/6"	NP	13
	--MSPT 5--	65	22	100/4"	NP	16
418.6	--MSPT 6-- Boring terminated at 66.25 ft	70	23	100/3"	NP	18
		75				

GENERAL NOTES

Begin Drilling: 05-23-2019 Complete Drilling: 05-23-2019
Drilling Contractor: Wang Testing Services Drill Rig:
Driller: N&K&N Logger: F. Bozga Checked by: C. Marin
Drilling Method: 2.25" HSA to 10 ft, mud rotary thereafter, boring backfilled upon completion

WATER LEVEL DATA

While Drilling: 3.00 ft
At Completion of Drilling: 3 ft mud
Time After Drilling: NA
Depth to Water: NA
The stratification lines represent the approximate boundary between soil types; the actual transition may be gradual.

BORING LOG BSB-16HA

Wang Engineering
wangeng@wangeng.com
1145 N Main Street
Lombard, Illinois 60148
Telephone: 630-953-9928
Fax: 630-953-9938

WEI Job No.: 707-21-01

Client: Michael Baker International
Project: Cedar Street Extension at IL Route 29
Location: Tazewell County, IL

Datum: NAVD 88
Elevation: 504.85 ft
North: 1456327.05 ft
East: 2458256.14 ft
Station: 82+72.66
Offset: 26.88' Lt

Elevation (ft)	SOIL AND ROCK DESCRIPTION	Depth (ft)	Sample No.	SPT Values (blw/6 in)	Qu (tsf)	Moisture Content (%)
504.5	Black LOAM --TOPSOIL--		1	PUSH	NP	10
	Brown, medium SAND, few gravel; moist --FILL-		2	PUSH	NP	11
		5	3	PUSH	NP	6
	--%Gravel=6.2-- --%Sand=78.9-- --%Silt=11.4-- --%Clay=3.5-- --A-2-4 (0)--		4	PUSH	NP	9
		10	5	PUSH	NP	9
	--<2-inch thick, very stiff (2.75 P) clay loam seams--		6	PUSH	NP	12
			7	PUSH	NP	9
		15	8	PUSH	NP	9
	--<2-inch thick clay loam seams--		9	PUSH	NP	10
			10	PUSH	NP	9
484.9	Boring terminated at 20.00 ft	20				
		25				

GENERAL NOTES

Begin Drilling: 06-19-2019 Complete Drilling: 06-19-2019
Drilling Contractor: Wang Testing Services Drill Rig:
Driller: N&A&B Logger: F. Bozga Checked by: C. Marin
Drilling Method: 1" IDA Pneumatic Geoprobe LB Sampler

WATER LEVEL DATA

While Drilling: DRY
At Completion of Drilling: DRY
Time After Drilling: NA
Depth to Water: NA
The stratification lines represent the approximate boundary between soil types; the actual transition may be gradual.

INFRASTRUCTURE ENGINEERING | INCORPORATED

USER NAME = DLamb	DESIGNED - WANG	REVISED -	
	CHECKED - WANG	REVISED -	
PLOT SCALE = 0.1667 ' / in	DRAWN - MD	REVISED -	
PLOT DATE = 6/6/2023	CHECKED - SPK	REVISED -	

STATE OF ILLINOIS
DEPARTMENT OF TRANSPORTATION

SOIL BORING LOGS BSB-16 & BSB-16HA
STRUCTURE NO. 090-0183

SHEET S2-44 OF S2-47 SHEETS

F.A.P. RTE.	SECTION	COUNTY	TOTAL SHEETS	SHEET NO.
VAR.	13 (HVB, HB-3) BR-1;R	TAZEWELL	1173	764

CONTRACT NO. 68C55

ILLINOIS | FED. AID PROJECT

Wang Engineering
wangeng@wangeng.com
1145 N Main Street
Lombard, Illinois 60148
Telephone: 630-953-9928
Fax: 630-953-9938

BORING LOG BSB-17

WEI Job No.: 707-21-01

Client: **Michael Baker International**
Project: **Cedar Street Extension at IL Route 29**
Location: **Tazewell County, IL**

Datum: NAVD 88
Elevation: 487.09 ft
North: 1456267.85 ft
East: 2458309.01 ft
Station: 105+28.40
Offset: 20.44' Rt

Elevation (ft)	SOIL AND ROCK DESCRIPTION	Depth (ft)	Sample No.	SPT Values (blw/6 in)	Qu (tsf)	Moisture Content (%)
486.4	8-inch thick ASPHALT --PAVEMENT--					
485.7	9-inch thick CONCRETE --PAVEMENT--					
	Very stiff, brown CLAY LOAM, trace to little gravel --FILL-- --RDR 2--	5	1	4 3 5	2.50 P	16
			2	2 3 4	3.12 B	15
481.6	Loose, brown GRAVELLY SAND; moist to saturated --FILL-- --RDR 2--		3	11 6 3	NP	10
477.8	Medium stiff to stiff, brown SILTY CLAY LOAM, trace gravel --RDR 2--	10	4	4 2 2	NR	
	--L_L(%)=35, P_L(%)=17-- --%Gravel=3.7-- --%Sand=22.3-- --%Silt=51.9-- --%Clay=22.1-- --A-6 (12)--	15	5	1 2 3	0.74 B	19
			6	3 4 5	1.64 B	28
			7	3 3 3	1.07 B	22
469.1	Medium dense, brown, coarse GRAVELLY SAND	20	8	5 8 10	NP	8
466.0	Stiff, brown CLAY LOAM, trace gravel --RDR 2--		9	5 4 4	1.50 P	16
462.3		25	10	4 5 7	1.31 B	17

Elevation (ft)	SOIL AND ROCK DESCRIPTION	Depth (ft)	Sample No.	SPT Values (blw/6 in)	Qu (tsf)	Moisture Content (%)
461.6	Brown GRAVELLY SAND; saturated Loose to dense, brown, medium to coarse SAND, trace gravel; saturated --RDR 2--		11	3 3 4	NP	23
		30	12	4 7 9	NP	21
	--%Gravel=1.7-- --%Sand=93.9-- --%Silt=3.3-- --%Clay=1.2-- --A-3 (0)--	35	13	7 17 25	NP	23
		40	14	7 9 14	NP	17
	--hard drilling, 42.5 to 43.5 feet--					
443.0	Very dense, greenish gray SHALE --RDR 4--	45	15	18 22 42	NP	16
442.1	Very weak, light greenish gray, fair to good rock mass quality SHALE; closely spaced, completely weathered, horizontal joints, with no opening, slicken walls. --Run 1: 45.0 to 50.0 feet-- --Recovery = 67%-- --RQD = 58%--	50	16	CORE		

GENERAL NOTES

Begin Drilling: 06-05-2019 Complete Drilling: 06-05-2019
Drilling Contractor: Wang Testing Services Drill Rig:
Driller: N&A&B Logger: F. Bozga Checked by: C. Marin
Drilling Method: 3.25" HSA; boring backfilled upon completion

WATER LEVEL DATA

While Drilling: 8.00 ft
At Completion of Drilling: 5 ft augers flushed
Time After Drilling: NA
Depth to Water: NA
The stratification lines represent the approximate boundary between soil types; the actual transition may be gradual.

Wang Engineering
wangeng@wangeng.com
1145 N Main Street
Lombard, Illinois 60148
Telephone: 630-953-9928
Fax: 630-953-9938

BORING LOG BSB-17

WEI Job No.: 707-21-01

Client: **Michael Baker International**
Project: **Cedar Street Extension at IL Route 29**
Location: **Tazewell County, IL**

Datum: NAVD 88
Elevation: 487.09 ft
North: 1456267.85 ft
East: 2458309.01 ft
Station: 105+28.40
Offset: 20.44' Rt

Elevation (ft)	SOIL AND ROCK DESCRIPTION	Depth (ft)	Sample No.	SPT Values (blw/6 in)	Qu (tsf)	Moisture Content (%)
	--Run 2: 50.0 to 55.0 feet-- --Recovery = 100%-- --RQD = 83%-- --Q_u at 51.0 feet=236 psi--	55	17	CORE		
	--Run 3: 55.0 to 60.0 feet-- --Recovery = 85%-- --RQD = 70%-- --Q_u at 57.0 feet=518 psi--	60	18	CORE		
427.1	Boring terminated at 60.00 ft	65				
		70				
		75				

GENERAL NOTES

Begin Drilling: 06-05-2019 Complete Drilling: 06-05-2019
Drilling Contractor: Wang Testing Services Drill Rig:
Driller: N&A&B Logger: F. Bozga Checked by: C. Marin
Drilling Method: 3.25" HSA; boring backfilled upon completion

WATER LEVEL DATA

While Drilling: 8.00 ft
At Completion of Drilling: 5 ft augers flushed
Time After Drilling: NA
Depth to Water: NA
The stratification lines represent the approximate boundary between soil types; the actual transition may be gradual.

WANGENGINC 707210 GPJ WANGENG.GDT 6/10/20

MODEL: Default
FILE NAME: pw:\\mis-uis-pw.bentley.com:mis-uis-pw-03\Documents\Chicago IL\01 Projects\179740 IDOT Cedar StExt PhII\5.0 CADD\CAD Sheets\Muir St Bridge Sheets\0090183-68C55-045-Bor2.dgn

INFRASTRUCTURE ENGINEERING

USER NAME = DLamb	DESIGNED - WANG	REVISED -	
	CHECKED - WANG	REVISED -	
PLOT SCALE = 0.1667 ' / in.	DRAWN - MD	REVISED -	
PLOT DATE = 6/6/2023	CHECKED - SPK	REVISED -	

STATE OF ILLINOIS
DEPARTMENT OF TRANSPORTATION

SOIL BORING LOG BSB-17
STRUCTURE NO. 090-0183

SHEET S2-45 OF S2-47 SHEETS

F.A.P. RTE.	SECTION	COUNTY	TOTAL SHEETS	SHEET NO.
VAR.	13 (HVB, HB-3) BR-1:R	TAZEWELL	1173	765

CONTRACT NO. 68C55

ILLINOIS FED. AID PROJECT

Wang Engineering
wangeng@wangeng.com
1145 N Main Street
Lombard, Illinois 60148
Telephone: 630-953-9928
Fax: 630-953-9938

BORING LOG BSB-18

WEI Job No.: 707-21-01

Client: **Michael Baker International**
Project: **Cedar Street Extension at IL Route 29**
Location: **Tazewell County, IL**

Datum: NAVD 88
Elevation: 486.62 ft
North: 1456190.81 ft
East: 2458267.89 ft
Station: 83+96.29
Offset: 42.36' Rt

Elevation (ft)	SOIL AND ROCK DESCRIPTION	Depth (ft)	Sample Type / recovery	Sample No.	SPT Values (bw/6 in)	Qu (tsf)	Moisture Content (%)
	6-inch thick, ASPHALT over 5-inch thick, CONCRETE --PAVEMENT--						
485.75	Very dense, brown, dry to damp SILTY LOAM, trace gravel, brick fragments --FILL--			1	6 23 34	NP	8
482.6	--RDR 2 to 3-- possible cobbles	5		2	11 29 18	NR	13
	Medium stiff, brown and gray, damp to moist CLAY LOAM, trace gravel --FILL--			3	3 2 2	0.74 B	16
490.1	--RDR 2-- Medium stiff to very stiff, brown, moist SILTY CLAY to SILTY CLAY LOAM, trace gravel --RDR 2--	10		4	2 3 5	1.72 B	14
				5	3 3 4	1.07 B	13
		15		6	4 4 7	2.38 B	13
471.1	Medium dense, brown, saturated SAND to SANDY LOAM, trace gravel --RDR 2 to 3--			7	6 9 12	NP	4
		20		8	6 5 7	NP	6
			▽	9	5 6 6	NP	17
		25		10	5 7 9	NP	16

Elevation (ft)	SOIL AND ROCK DESCRIPTION	Depth (ft)	Sample Type / recovery	Sample No.	SPT Values (bw/6 in)	Qu (tsf)	Moisture Content (%)
449.9	Dense, brown, saturated GRAVELLY SAND, trace cobbles --RDR 2-3-- --heaving sand at 38.5 feet--	30		11	6 6 9	NP	19
				12	2 5 7	NP	15
		35		13	3 7 12	NP	15
		40		14	5 14 21	NP	8
442.9	--possible cobbles-- Very dense, bluish gray WEATHERED SHALE --RDR 2 to 3--	45		15	25 38 50	NP	11
441.6	Extremely weak to very weak, light bluish gray, fair to excellent rock mass quality SHALE; moderately spaced, completely weathered, horizontal joints, with no joint opening, slicken walls, and no infill. --Run 1: 45.0 to 50.0 feet--	50	CORE	16			

GENERAL NOTES

Begin Drilling: **06-06-2019** Complete Drilling: **06-06-2019**
Drilling Contractor: **Wang Testing Services** Drill Rig:
Driller: **K&K&N** Logger: **E. Yim** Checked by: **C. Marin**
Drilling Method: **3.25" HSA; boring backfilled upon completion**

WATER LEVEL DATA

While Drilling: ▽ **21.00 ft**
At Completion of Drilling: ▼
Time After Drilling: **NA**
Depth to Water: ▼ **NA**

The stratification lines represent the approximate boundary between soil types; the actual transition may be gradual.

WANGENGINC 1072101.GPJ WANGENG.GDT 6/10/20

Wang Engineering
wangeng@wangeng.com
1145 N Main Street
Lombard, Illinois 60148
Telephone: 630-953-9928
Fax: 630-953-9938

BORING LOG BSB-18

WEI Job No.: 707-21-01

Client: **Michael Baker International**
Project: **Cedar Street Extension at IL Route 29**
Location: **Tazewell County, IL**

Datum: NAVD 88
Elevation: 486.62 ft
North: 1456190.81 ft
East: 2458267.89 ft
Station: 83+96.29
Offset: 42.36' Rt

Elevation (ft)	SOIL AND ROCK DESCRIPTION	Depth (ft)	Sample Type / recovery	Sample No.	SPT Values (bw/6 in)	Qu (tsf)	Moisture Content (%)
	--Recovery = 63%-- --RQD = 63%-- --Q_u at 46.5 feet=91 psi-- --Run 2: 50.0 to 55.0 feet-- --Recovery = 100%-- --RQD = 100%--	55	CORE	17			
	--Run 3: 55.0 to 60.0 feet-- --Recovery = 100%-- --RQD = 97%-- --Q_u at 57.0 feet=573 psi--	60	CORE	18			
426.6	Boring terminated at 60.00 ft						
		65					
		70					
		75					

GENERAL NOTES

Begin Drilling: **06-06-2019** Complete Drilling: **06-06-2019**
Drilling Contractor: **Wang Testing Services** Drill Rig:
Driller: **K&K&N** Logger: **E. Yim** Checked by: **C. Marin**
Drilling Method: **3.25" HSA; boring backfilled upon completion**

WATER LEVEL DATA

While Drilling: ▽ **21.00 ft**
At Completion of Drilling: ▼
Time After Drilling: **NA**
Depth to Water: ▼ **NA**

The stratification lines represent the approximate boundary between soil types; the actual transition may be gradual.

WANGENGINC 1072101.GPJ WANGENG.GDT 6/10/20

Wang Engineering
wangeng@wangeng.com
1145 N Main Street
Lombard, Illinois 60148
Telephone: 630-953-9928
Fax: 630-953-9938

BORING LOG BSB-19

WEI Job No.: 707-21-01

Client: Michael Baker International
Project: Cedar Street Extension at IL Route 29
Location: Tazewell County, IL

Datum: NAVD 88
Elevation: 506.55 ft
North: 1456106.12 ft
East: 2458353.58 ft
Station: 85+02.84
Offset: 21.92' Lt

Elevation (ft)	SOIL AND ROCK DESCRIPTION	Depth (ft)	Sample Type / recovery	Sample No.	SPT Values (blw/6 in)	Qu (tsf)	Moisture Content (%)
	15-inch thick ASPHALT --PAVEMENT--						
505.3	Loose to medium dense, brown, medium SAND; damp --FILL-- --RDR 2--			1	5 6 7	NP	6
		5		2	5 5 4	NP	7
				3	4 5 6	NP	7
	--%Gravel=0.5-- --%Sand=92.0-- --%Silt=6.1-- --%Clay=1.4-- --A-3 (0)--	10		4	5 4 4	NP	6
				5	4 6 5	NP	6
		15		6	4 6 9	NP	5
491.1	Medium dense, brown, damp to wet, fine to medium SAND, trace gravel --RDR 2--			7	7 7 11	NP	6
		20		8	5 7 7	NP	6
				9	6 7 9	NP	6
		25		10	5 7 8	NP	5
474.8	Medium dense to dense, brown, wet coarse GRAVEL to GRAVELLY SAND --RDR 2-- --%Gravel=15.8-- --%Sand=77.2-- --%Silt=6.2-- --%Clay=0.8-- --A-3 (0)--			11	6 9 14	NP	4
		30		12	21 18 16	NP	8
		35		13	14 18 17	NP	22
		40		14	8 13 15	NP	14
		45		15	10 11 12	NP	20
		50		16	9 10 12	NP	19

GENERAL NOTES

Begin Drilling: 06-13-2019 Complete Drilling: 06-13-2019
Drilling Contractor: Wang Testing Services Drill Rig:
Driller: N&A&B Logger: F. Bozga Checked by: C. Marin
Drilling Method: 3.25" HSA to 30 ft, mud rotary thereafter, boring backfilled upon completion

WATER LEVEL DATA

While Drilling: 42.00 ft
At Completion of Drilling: 12 ft mud
Time After Drilling: NA
Depth to Water: NA
The stratification lines represent the approximate boundary between soil types; the actual transition may be gradual.

WANGENGINC 707210 1 GPJ WANGENG.GDT 8/10/23

Wang Engineering
wangeng@wangeng.com
1145 N Main Street
Lombard, Illinois 60148
Telephone: 630-953-9928
Fax: 630-953-9938

BORING LOG BSB-19

WEI Job No.: 707-21-01

Client: Michael Baker International
Project: Cedar Street Extension at IL Route 29
Location: Tazewell County, IL

Datum: NAVD 88
Elevation: 506.55 ft
North: 1456106.12 ft
East: 2458353.58 ft
Station: 85+02.84
Offset: 21.92' Lt

Elevation (ft)	SOIL AND ROCK DESCRIPTION	Depth (ft)	Sample Type / recovery	Sample No.	SPT Values (blw/6 in)	Qu (tsf)	Moisture Content (%)
		55		17	15 20 20	NP	20
	--possible cobbles--						
449.6	Very dense, brown, wet GRAVELLY SANDY LOAM to SANDY GRAVEL --RDR 3 to 4--	60		18	28 32 32	NP	10
	--possible cobbles--						
	--%Gravel=59.7-- --%Sand=25.0-- --%Silt=13.1-- --%Clay=2.2-- --A-1-a (0)--	65		19	33 50/5"	NP	9
441.6	Very dense, greenish, gray SHALE MSPT #1, #2, #3, #4, #5, #6 --RDR 4 to 5-- --MSPT 1--			20	100/6.5"	NP	15
	--MSPT 2--	70		21	100/6"	NP	12
	--MSPT 3--			22	100/6.75"	NP	14
	--MSPT 4--	75		23	100/6.5"	NP	14
	--MSPT 5--			24	100/5.25"	NP	16
427.9	--MSPT 6-- Boring terminated at 78.70 ft	80		25	100/2"	NP	17
		85					
		90					
		95					
		100					

GENERAL NOTES

Begin Drilling: 06-13-2019 Complete Drilling: 06-13-2019
Drilling Contractor: Wang Testing Services Drill Rig:
Driller: N&A&B Logger: F. Bozga Checked by: C. Marin
Drilling Method: 3.25" HSA to 30 ft, mud rotary thereafter, boring backfilled upon completion

WATER LEVEL DATA

While Drilling: 42.00 ft
At Completion of Drilling: 12 ft mud
Time After Drilling: NA
Depth to Water: NA
The stratification lines represent the approximate boundary between soil types; the actual transition may be gradual.

WANGENGINC 707210 1 GPJ WANGENG.GDT 8/10/23

MODEL: Default
FILE NAME: pw:\\mi-us-pw.bentley.com:mi-us-pw-03\Documents\Chicago IL\01 Projects\179740 IDOT Cedar\Sfxt Phth\5.0 CADD\CAD Sheets\Main St. Bridge Sheets\09301183-68C55-047-Bor4.dgn

INFRASTRUCTURE ENGINEERING | INCORPORATED

USER NAME = DLamb	DESIGNED - WANG	REVISED -	
	CHECKED - WANG	REVISED -	
PLOT SCALE = 0.1667 ' / in.	DRAWN - MD	REVISED -	
PLOT DATE = 6/6/2023	CHECKED - SPK	REVISED -	

STATE OF ILLINOIS
DEPARTMENT OF TRANSPORTATION

SOIL BORING LOG BSB-19
STRUCTURE NO. 090-0183

SHEET S2-47 OF S2-47 SHEETS

F.A.P. RTE.	SECTION	COUNTY	TOTAL SHEETS	SHEET NO.
VAR.	13 (HVB, HB-3) BR-1:R	TAZEWELL	1173	767
		CONTRACT NO. 68C55		
	ILLINOIS	FED. AID PROJECT		

Bench Mark: Chiseled "□" on top of the SE Wingwall of the main span of the Cedar St. Bridge over the railyard. Elev. 505.64

Existing structure: None

Traffic will be closed on Cedar St. mainline, and the Cedar St. ramps during construction of the Cedar St. Bridge and Retaining Wall A.

NOTES:

1. Stations and offsets are measured along Prop. ℄ Multi-Use Path to the front face of wall.
2. F.F. denotes Front Face.
3. B.F. denotes Back Face.

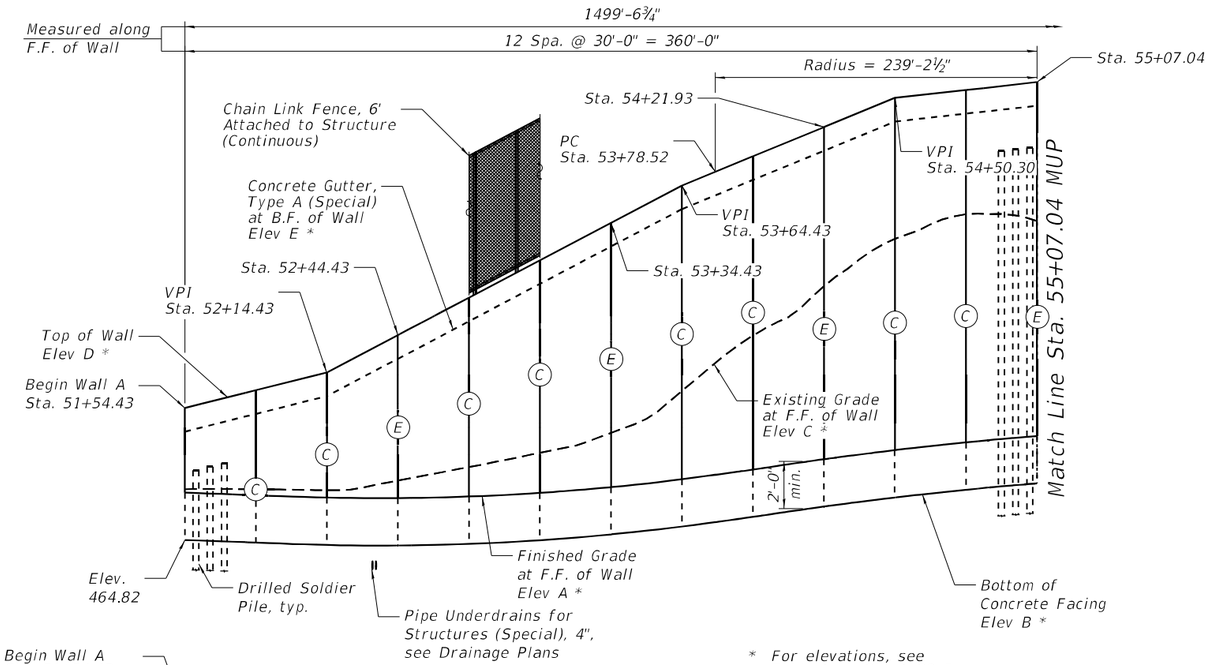

* For elevations, see Table 1 on Sheet S3-5

ELEVATION

(Looking at F.F. of Wall)

HORIZONTAL CURVE DATA

(Prop. Curve Multi-Use Path)

CURVE MULTIPTH-1	CURVE MULTIPTH-2
PI STA. = 50+27.26	PI STA. = 50+69.55
Δ = 11° 04' 11" (RT)	Δ = 18° 49' 13" (RT)
D = 21° 26' 55"	D = 57° 17' 45"
R = 267.13'	R = 100.00'
T = 25.89'	T = 16.57'
L = 51.61'	L = 32.85'
E = 1.25'	E = 1.36'
P.C. STA. = 50+01.37	P.C. STA. = 50+52.98
P.T. STA. = 50+52.98	P.T. STA. = 50+85.83

CURVE MULTIPTH-3	CURVE MULTIPTH-4
PI STA. = 50+96.78	PI STA. = 54+75.12
Δ = 9° 52' 13" (LT)	Δ = 46° 07' 51" (RT)
D = 45° 11' 27"	D = 25° 19' 43"
R = 126.79'	R = 226.21'
T = 10.95'	T = 96.33'
L = 21.84'	L = 182.13'
E = 0.47'	E = 19.65'
P.C. STA. = 50+85.83	P.C. STA. = 53+78.79
P.T. STA. = 51+07.67	P.T. STA. = 55+60.92

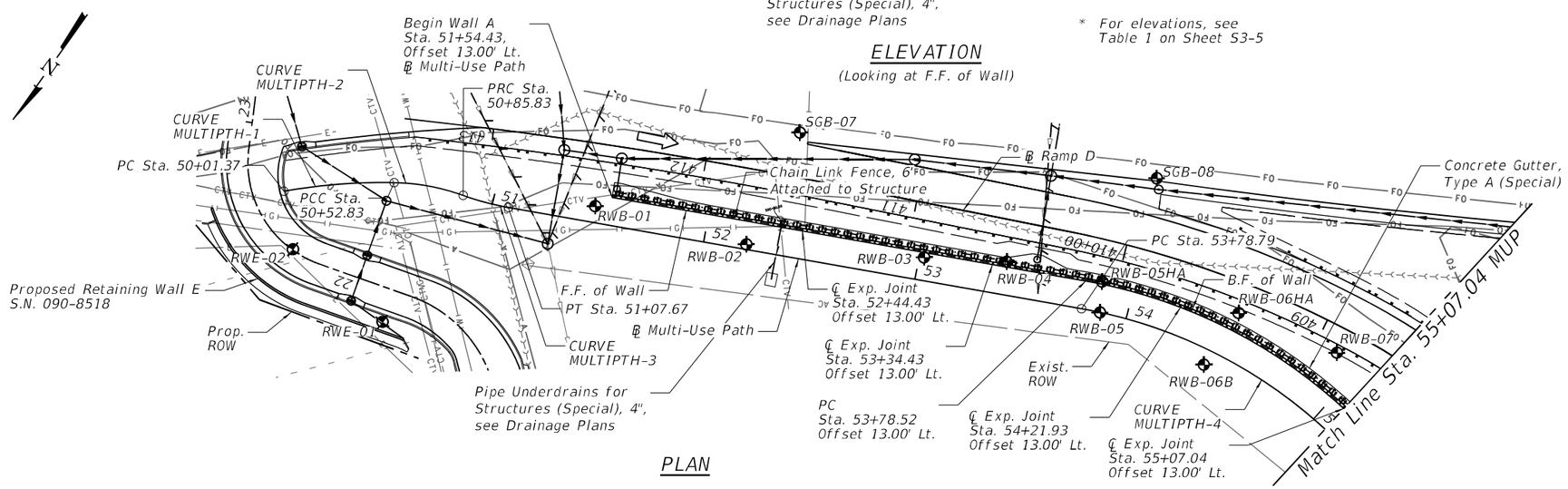

PLAN

LEGEND

- (C) Construction Joint
- (E) Expansion Joint
- Soil Boring Location
- T- Existing Underground Telephone
- A- Existing Aerial Electric Line
- E- Existing Underground Electric
- CTV- Existing Underground Cable TV
- Existing Drainage Inlet
- Existing Storm Sewer
- Existing Sanitary Sewer
- W- Existing Water Main
- FO- Existing Underground Fiber Optic
- Guardrail
- Chain Link Fence, 6'
- Proposed Drainage Inlet
- Proposed Storm Sewer
- Direction of Traffic
- Existing Sewer Removal

DESIGN SPECIFICATIONS

2020 AASHTO LRFD Bridge Design Specifications, 9th Edition

DESIGN STRESSES

FIELD UNITS

f'c = 3,500 psi
fy = 60,000 psi (Reinforcement)
fy = 50,000 psi (M270 Grade 50) (Soldier Piles)

APPROVED
For Structural Adequacy Only
Engineer of Bridges & Structures

STATE OF ILLINOIS
MARY LOUISE KUTSKA
081-008008
LICENSED STRUCTURAL ENGINEER

SIGNED: Mary Kutska
Mary Louise Kutska
Il. Lic. No. 081-008008
Expires 11-30-2024

DATE: 6/8/2023

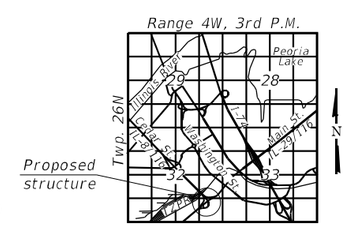

LOCATION SKETCH

GENERAL PLAN
RETAINING WALL A ALONG MULTI-USE PATH
F.A.P. 669 - SECTION 13(HVB, HB-3) BR
TAZEWELL COUNTY
STATION 51+54.43 TO 66+64.32
STRUCTURE NO. 090-8517

MODEL: Default
FILE NAME: pw:\\mb-us-pw.bentley.com:mb-us-pw-03\Documents\Chicago 1\001 Projects\179740 IDOT Cedar\SHEAT PHITS.5.0 CADD\CADD Files\Retaining Wall Sheets\0908517-68C55-Wall0-001.dgn

Michael Baker INTERNATIONAL
200 W Adams Street Suite 1800 Chicago, IL 60606 PH: 312.707.8770 FAX: 312.707.8804

USER NAME = DLamb	DESIGNED - YC	REVISED -	
	CHECKED - MLK	REVISED -	
PLOT SCALE = 63.9997 ' / in.	DRAWN - EML	REVISED -	
PLOT DATE = 5/8/2023	CHECKED - JMK	REVISED -	

STATE OF ILLINOIS
DEPARTMENT OF TRANSPORTATION

GENERAL PLAN AND ELEVATION 1
STRUCTURE NO. 090-8517

SHEET S3-1 OF S3-38 SHEETS

F.A.P. RTE.	SECTION	COUNTY	TOTAL SHEETS	SHEET NO.
669	13 (HVB, HB-3) BR	TAZEWELL	1173	768
		CONTRACT NO. 68C55		
		ILLINOIS FED. AID PROJECT		

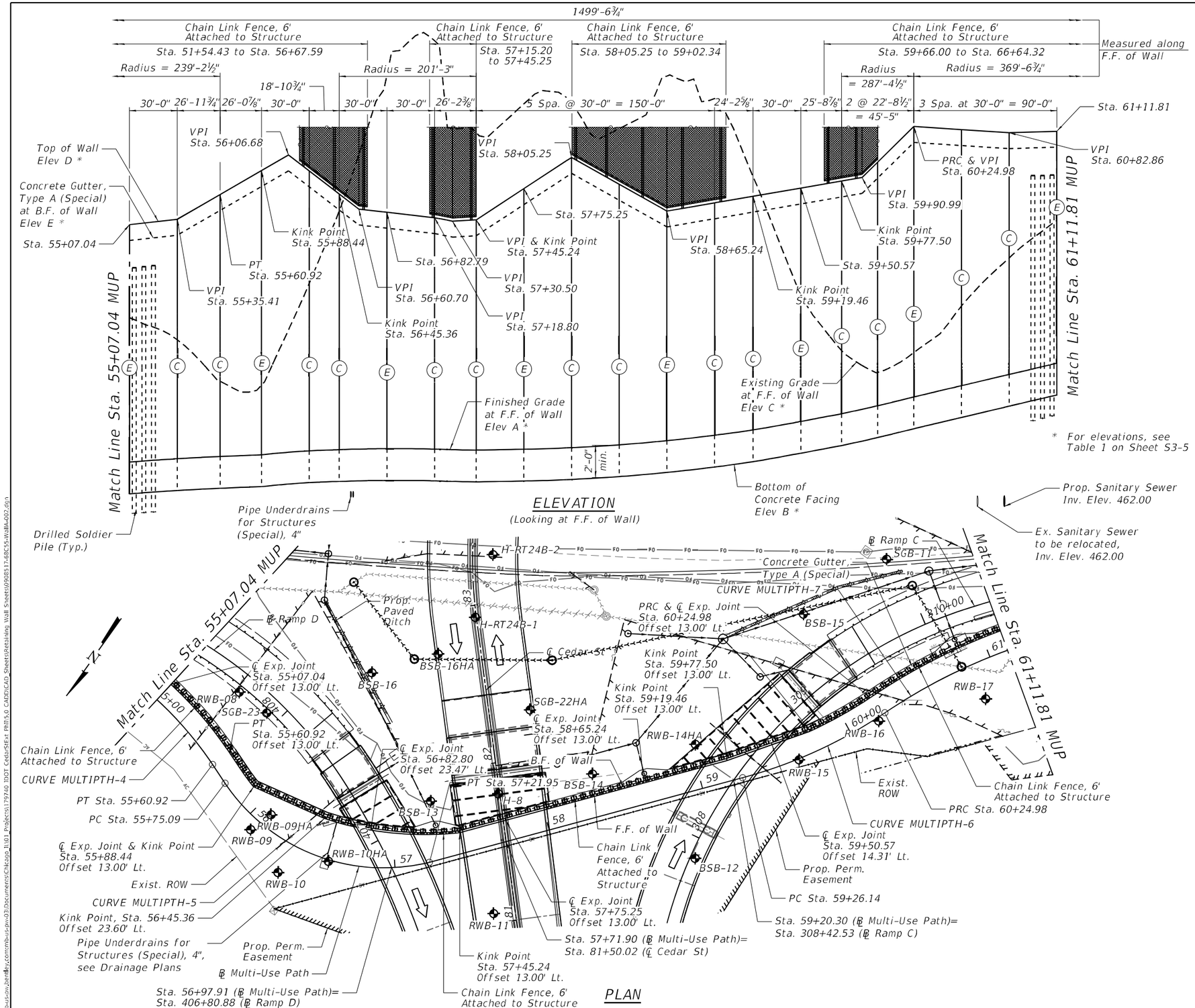

HORIZONTAL CURVE DATA

(Prop. Curve Multi-Use Path)

CURVE MULTIPTH-4	CURVE MULTIPTH-5
PI STA. = 54+75.12	PI STA. = 56+59.29
Δ = 46° 07' 51" (RT)	Δ = 70° 04' 51" (LT)
D = 25° 19' 43"	D = 47° 43' 07"
R = 226.21'	R = 120.07'
T = 96.33'	T = 84.20'
L = 182.13'	L = 146.86'
E = 19.65'	E = 26.58'
P.C. STA. = 53+78.79	P.C. STA. = 55+75.09
P.T. STA. = 55+60.92	P.T. STA. = 57+21.95

CURVE MULTIPTH-6	CURVE MULTIPTH-7
PI STA. = 59+76.01	PI STA. = 61+22.07
Δ = 18° 52' 32" (LT)	Δ = 30° 27' 55" (RT)
D = 19° 05' 55"	D = 16° 04' 07"
R = 300.00'	R = 356.57'
T = 49.87'	T = 97.09'
L = 98.83'	L = 189.59'
E = 4.12'	E = 12.98'
P.C. STA. = 59+26.14	P.C. STA. = 60+24.98
P.T. STA. = 60+24.98	P.T. STA. = 62+14.57

LEGEND

- (C) Construction Joint
- (E) Expansion Joint
- Soil Boring Location
- Existing Underground Telephone
- Existing Aerial Electric Line
- Existing Underground Electric
- Existing Underground Cable TV
- Existing Drainage Inlet
- Existing Storm Sewer
- Existing Sanitary Sewer
- Existing Water Main
- Existing Underground Fiber Optic
- Guardrail
- Chain Link Fence, 6'
- Proposed Drainage Inlet
- Proposed Storm Sewer
- Direction of Traffic
- Existing Sewer Removal

GENERAL PLAN
RETAINING WALL A ALONG MULTI-USE PATH
F.A.P. 669 - SECTION 13(HVB, HB-3) BR
TAZEWELL COUNTY
STATION 51+54.43 TO 66+64.32
STRUCTURE NO. 090-8517

Michael Baker INTERNATIONAL
200 W Adams Street
Suite 1800
Chicago, IL 60606
P:+1 312.707.8770
FAX: 312.707.8804

USER NAME = DLamb	DESIGNED - YC	REVISED -	
	CHECKED - MLK	REVISED -	
PLOT SCALE = 63.9997 ' / in.	DRAWN - EML	REVISED -	
PLOT DATE = 6/6/2023	CHECKED - JMK	REVISED -	

STATE OF ILLINOIS
DEPARTMENT OF TRANSPORTATION

GENERAL PLAN AND ELEVATION 2
STRUCTURE NO. 090-8517

SHEET S3-2 OF S3-37 SHEETS

F.A.P. RTE.	SECTION	COUNTY	TOTAL SHEETS	SHEET NO.
669	13 (HVB, HB-3) BR	TAZEWELL	1173	769
		CONTRACT NO. 68C55		
		ILLINOIS FED. AID PROJECT		

MODEL: Default
FILE NAME: pw:\\mi-us-pw.bentley.com:mi-us-pw-03\Documents\Chicago IL\01 Projects\179740 IDOT Ceda/Sfex PhII\5.0 CADD\CAD Sheets\Retaining Wall Sheets\090817-68C55-WallA-002.dgn

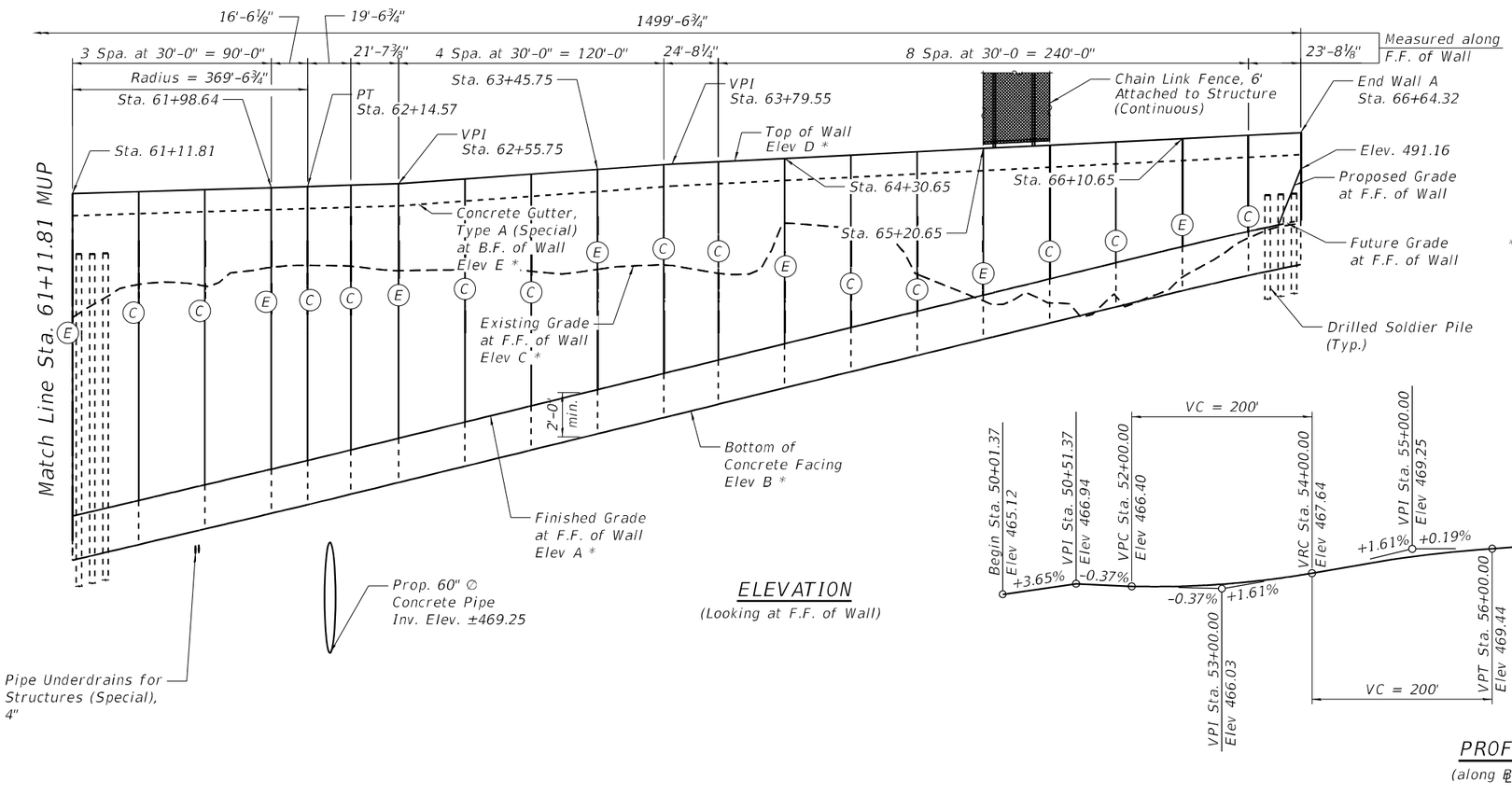

ELEVATION

(Looking at F.F. of Wall)

* For elevations see Table 1 on Sheet S3-5

HORIZONTAL CURVE DATA

(Prop. Curve Multi-Use Path)

CURVE MULTIPTH-7
PI STA. = 61+22.07
Δ = 30° 27' 55" (RT)
D = 16° 04' 07"
R = 356.57'
T = 97.09'
L = 189.59'
E = 12.98'
P.C. STA. = 60+24.98
P.T. STA. = 62+14.57

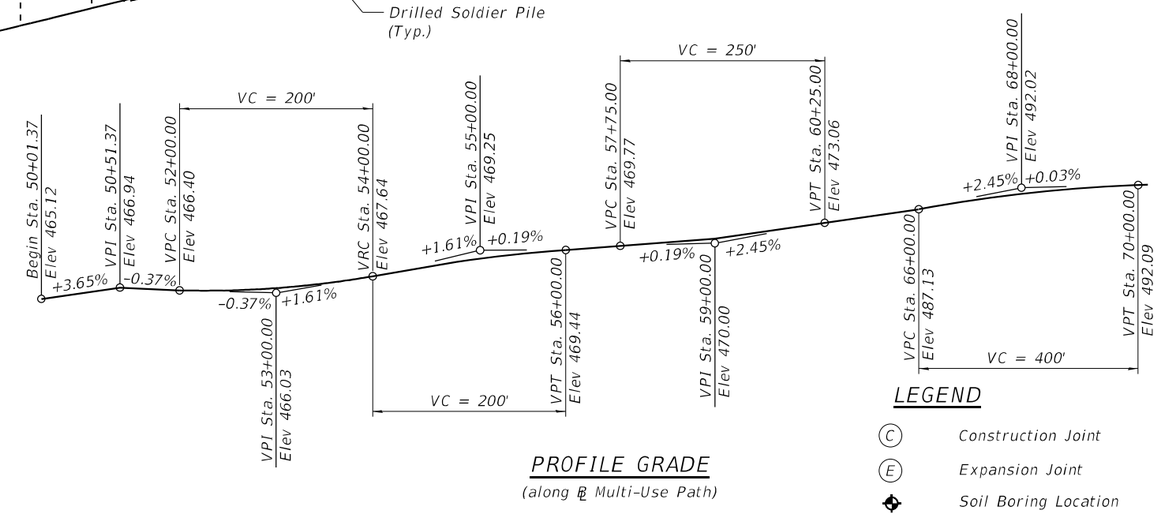

PROFILE GRADE

(along ℄ Multi-Use Path)

LEGEND

- (C) Construction Joint
- (E) Expansion Joint
- Soil Boring Location
- T – Existing Underground Telephone
- A – Existing Aerial Electric Line
- E – Existing Underground Electric
- CTV – Existing Underground Cable TV
- Existing Drainage Inlet
- Existing Storm Sewer
- Existing Sanitary Sewer
- W – Existing Water Main
- FO – Existing Underground Fiber Optic
- Guardrail
- Chain Link Fence, 6'
- Proposed Drainage Inlet
- Proposed Storm Sewer
- Direction of Traffic
- Existing Sewer Removal

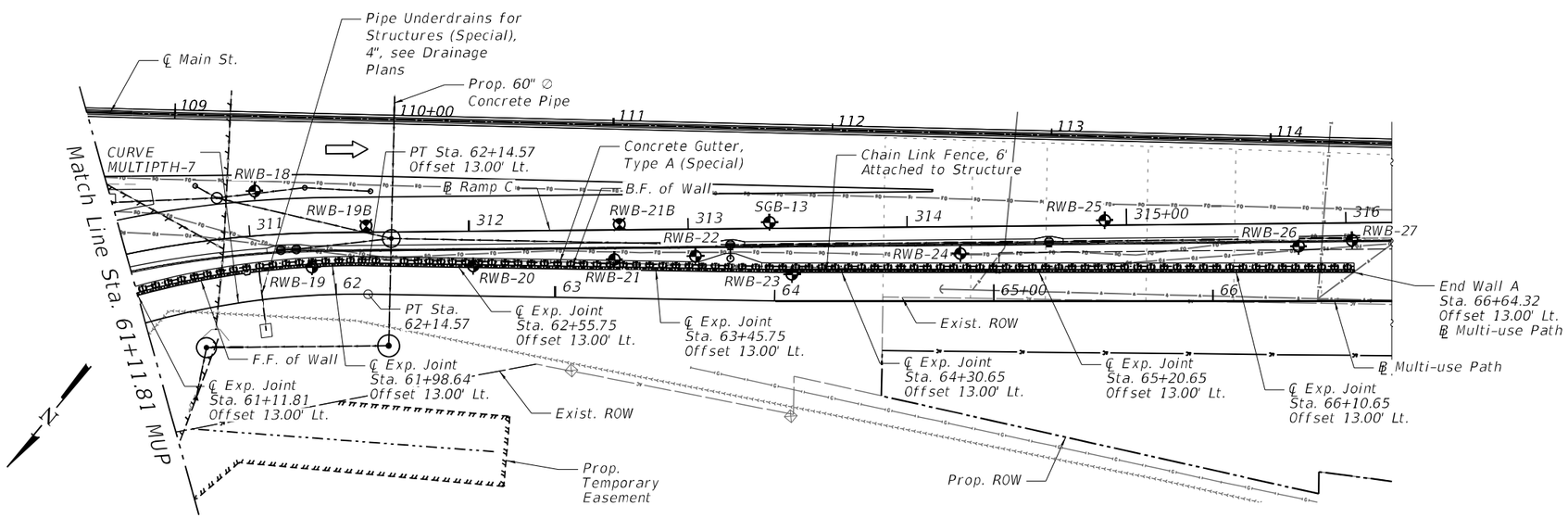

PLAN

GENERAL PLAN
RETAINING WALL A ALONG MULTI-USE PATH
F.A.P. 669 - SECTION 13(HVB, HB-3) BR
TAZEWELL COUNTY
STATION 51+54.43 TO 66+64.32
STRUCTURE NO. 090-8517

Michael Baker INTERNATIONAL
200 W Adams Street Suite 1800 Chicago, IL 60606 P:+1 312.707.8772 FAX: 312.707.8804

USER NAME = DLamb	DESIGNED - YC	REVISED -	
	CHECKED - MLK	REVISED -	
PLOT SCALE = 63.9997 ' / in.	DRAWN - EML	REVISED -	
PLOT DATE = 6/6/2023	CHECKED - JMK	REVISED -	

STATE OF ILLINOIS
DEPARTMENT OF TRANSPORTATION

GENERAL PLAN AND ELEVATION 3
STRUCTURE NO. 090-8517

SHEET S3-3 OF S3-38 SHEETS

F.A.P. RTE.	SECTION	COUNTY	TOTAL SHEETS	SHEET NO.
669	13 (HVB, HB-3) BR	TAZEWELL	1173	770
		CONTRACT NO. 68C55		
	ILLINOIS	FED. AID PROJECT		

GENERAL NOTES

1. Reinforcement bars designated "(E)" shall be epoxy coated.

2. Anti-Graffiti Coating shall be applied to exposed surfaces of the facing.

3. Existing utilities in conflict with retaining wall construction shall be protected, abandoned, or relocated according to Existing Drainage and Utility Plans. The Contractor shall field verify utilities to be protected to ensure they do not conflict with proposed construction and make necessary approved adjustments prior to construction or ordering of materials. Piles shall be located at a distance of at least 2 times the diameter of utility pipe away from the utility, measured from edge of pile to edge of utility pipe.

4. The Contractor shall provide a method to assure the soldier piles achieve at least the plan tip elevations. The soldier pile locations and elevations shall meet the tolerances provided in the Standard Specifications. Any additional measures required to satisfy the construction tolerances will not be paid for separately but shall be included in Drilling and Setting Soldier Piles (In Soil) or Drilling and Setting Soldier Piles (In Rock).

5. The Contractor is responsible for the design and performance of the untreated timber lagging using no less than a 3 in. nominal rough-sawn thickness and timber with a minimum allowable bending stress of 1000 psi.

6. Contractor shall coordinate the timing of the installation of soldier piles located beneath the Cedar Street over TZPR Bridge (S.N. 090-0182) with the bridge construction.

7. Wall is permitted to be built as straight chords between construction joints.

8. Surface treatment shall be continuous across construction and expansion joints. See Special Provisions.

9. The concrete facing shall not be poured before all grading work behind and above the wall is complete.

10. The coarse aggregate for Pipe Underdrains for Structures shall be CA-7 or CA-11 gradation.

INDEX OF SHEETS

TOTAL BILL OF MATERIAL

ITEM	UNIT	TOTAL
Structure Excavation	Cu. Yd.	1,788
Concrete Structures	Cu. Yd.	983.3
Stud Shear Connectors	Each	4,540
Reinforcement Bars, Epoxy Coated	Pound	111,330
Name Plates	Each	1
Furnishing Soldier Piles (W Section)	Foot	9,504
Drilling and Setting Soldier Piles (In Soil)	Cu. Ft.	41,340
Drilling and Setting Soldier Piles (In Rock)	Cu. Ft.	1,560
Untreated Timber Lagging	Sq. Ft.	15,626
Geocomposite Wall Drain	Sq. Yd.	1,095
Pipe Underdrains for Structres 4"	Foot	1,504
Anti-Graffiti Coating	Sq. Ft.	20,086
Chain Link Fence, 6' Attached to Structure	Foot	1,350

WALL ELEVATION TABLE

Station	Location	Offset	Elevation A	Elevation B	Elevation C	Elevation D	Elevation E
51+54.43	Beginning of Wall A	13.00'	466.82	464.82	466.97	470.40	469.40
51+84.43	Constr. Joint	13.00'	466.72	464.72	466.95	471.15	470.15
52+14.43	Constr. Joint/VPI	13.00'	466.62	464.62	466.93	471.90	470.90
52+44.43	Exp. Joint/VPI	13.00'	466.59	464.59	467.33	473.48	472.48
52+74.43	Constr. Joint	13.00'	466.66	464.66	467.91	475.06	474.06
53+04.43	Constr. Joint	13.00'	466.81	464.81	468.51	476.64	475.64
53+34.43	Exp. Joint/VPI	13.00'	467.06	465.06	469.35	478.22	477.22
53+64.43	Constr. Joint/VPI	13.00'	467.39	465.39	471.12	479.80	478.80
53+93.56	Constr. Joint/VPI	13.00'	467.80	465.80	473.46	481.05	480.05
54+21.93	Exp. Joint/VPI	13.00'	468.24	466.24	475.55	482.27	481.27
54+50.30	Constr. Joint/VPI	13.00'	468.62	466.62	477.55	483.50	482.50
54+78.67	Constr. Joint	13.00'	468.95	466.95	478.58	483.83	482.83
55+07.04	Exp. Joint/VPI	13.00'	469.22	467.22	478.30	484.17	483.17
55+35.41	Constr. Joint/VPI	13.00'	469.43	467.43	476.92	484.50	483.50
55+60.92	Constr. Joint/VPI	13.00'	469.57	467.57	474.31	486.06	485.06
55+88.45	Exp. Joint/VPI	13.00'	469.68	467.68	474.07	487.57	486.57
56+06.68	VPI	13.00'	469.83	467.83	477.54	488.54	487.54
56+22.04	Constr. Joint	22.23'	469.92	467.92	480.47	487.54	486.54
56+45.37	Constr. Joint/VPI	23.61'	470.00	468.00	485.02	486.09	485.09
56+60.70	VPI	24.14'	470.03	468.03	488.56	485.14	484.14
56+82.79	Exp. Joint/VPI	23.47'	470.06	468.06	493.60	484.94	483.94
57+18.80	Constr. Joint/VPI	18.61'	470.03	468.03	495.74	484.60	483.60
57+30.50	VPI	13.00'	470.00	468.00	490.21	484.38	483.38
57+45.25	Constr. Joint/VPI	13.00'	469.97	467.97	489.95	484.46	483.46
57+75.25	Exp. Joint/VPI	13.00'	470.03	468.03	491.76	486.43	485.43
58+05.25	Constr. Joint/VPI	13.00'	470.12	468.12	491.80	488.39	487.39
58+35.25	Constr. Joint	13.00'	470.30	468.30	490.21	486.70	485.70
58+65.24	Exp. Joint/VPI	13.00'	470.56	468.56	493.52	485.02	484.02
58+95.25	Constr. Joint	13.00'	470.91	468.91	492.10	485.53	484.53
59+19.46	Constr. Joint/VPI	13.00'	471.24	469.24	487.16	485.95	484.95
59+50.57	Exp. Joint/VPI	14.31'	471.77	469.77	479.80	486.47	485.47
59+77.50	Constr. Joint/VPI	13.00'	472.26	470.26	476.24	486.91	485.91
59+90.99	VPI	13.00'	472.54	470.54	475.30	487.13	486.13
60+01.24	Constr. Joint	13.00'	472.76	470.76	474.86	488.10	487.10
60+24.98	Exp. Joint/VPI	13.00'	473.32	471.32	476.11	490.34	489.34
60+53.92	Constr. Joint	13.00'	474.03	472.03	479.04	490.14	489.14
60+82.86	Constr. Joint/VPI	13.00'	474.73	472.73	482.07	489.95	488.95
61+11.81	Exp. Joint/VPI	13.00'	475.44	473.44	484.43	490.04	489.04
61+40.75	Constr. Joint	13.00'	476.15	474.15	485.93	490.13	489.13
61+69.70	Constr. Joint	13.00'	476.86	474.86	485.85	490.22	489.22
61+98.64	Exp. Joint/VPI	13.00'	477.57	475.57	486.70	490.31	489.31
62+14.57	Constr. Joint/VPI	13.00'	477.96	475.96	486.80	490.36	489.36
62+34.13	Constr. Joint	13.00'	478.44	476.44	486.76	490.42	489.42
62+55.75	Exp. Joint/VPI	13.00'	478.96	476.96	486.55	490.49	489.49
62+85.75	Constr. Joint	13.00'	479.70	477.70	486.60	490.70	489.70
63+15.75	Constr. Joint	13.00'	480.43	478.43	486.52	490.92	489.92
63+45.75	Exp. Joint/VPI	13.00'	481.17	479.17	486.61	491.14	490.14
63+75.75	Constr. Joint	13.00'	481.90	479.90	486.81	491.35	490.35
63+79.55	VPI	13.00'	481.99	479.99	486.79	491.38	490.38
64+00.44	Constr. Joint	13.00'	482.50	480.50	486.43	491.48	490.48
64+30.65	Exp. Joint/VPI	13.00'	483.24	481.24	488.71	491.63	490.63
64+60.65	Constr. Joint	13.00'	483.98	481.98	488.48	491.78	490.78
64+90.65	Constr. Joint	13.00'	484.71	482.71	486.39	491.93	490.93
65+20.65	Exp. Joint/VPI	13.00'	485.45	483.45	485.18	492.08	491.08
65+50.65	Constr. Joint	13.00'	486.18	484.18	485.09	492.23	491.23
65+80.65	Constr. Joint	13.00'	486.91	484.91	485.40	492.38	491.38
66+10.65	Exp. Joint/VPI	13.00'	487.64	485.64	486.26	492.53	491.53
66+40.65	Constr. Joint	13.00'	488.33	486.33	488.04	492.68	491.68
66+64.32	End of Wall A	13.00'	488.84	486.84	488.71	492.80	491.80

Elevation A - Finished Grade at Front Face of Wall
Elevation B - Bottom of Concrete Facing
Elevation C - Existing Grade at Front Face of Wall
Elevation D - Top of Wall
Elevation E - Concrete Gutter at Back Face of Wall

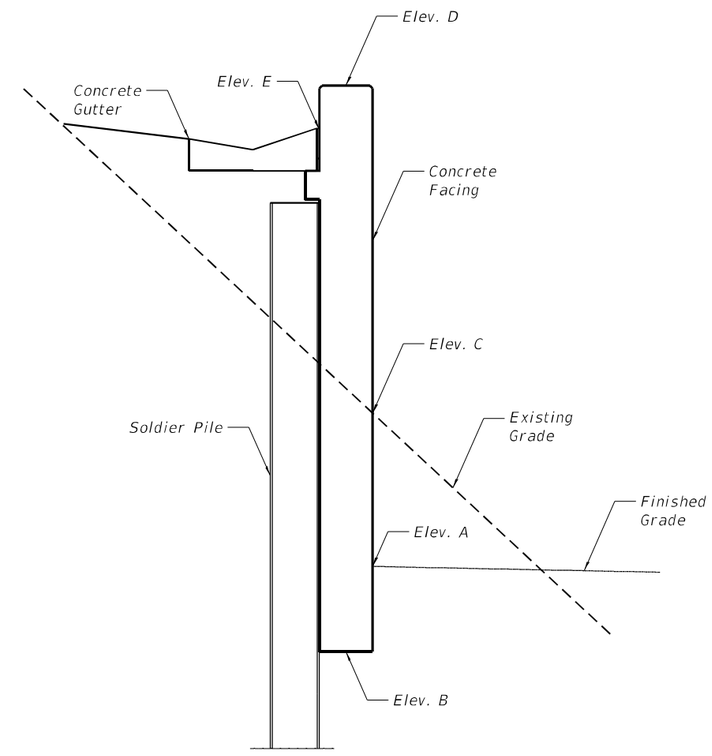

TYPICAL SECTION FOR ELEVATIONS

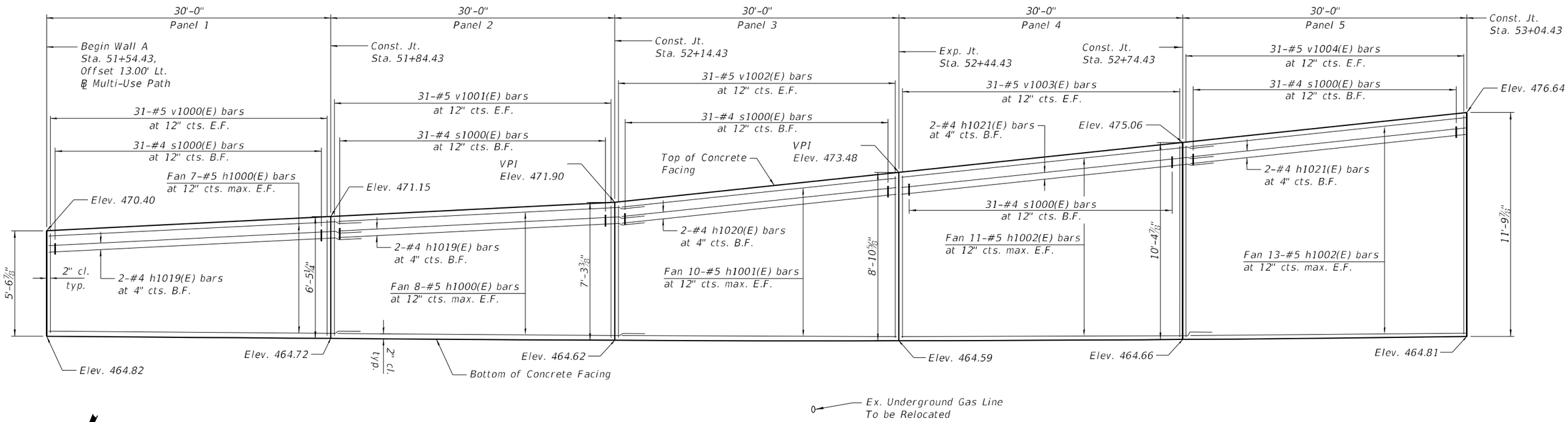

PARTIAL ELEVATION

N

MIN. BAR LAP

#4 Bars = 2'-11"
#5 Bars = 3'-7"

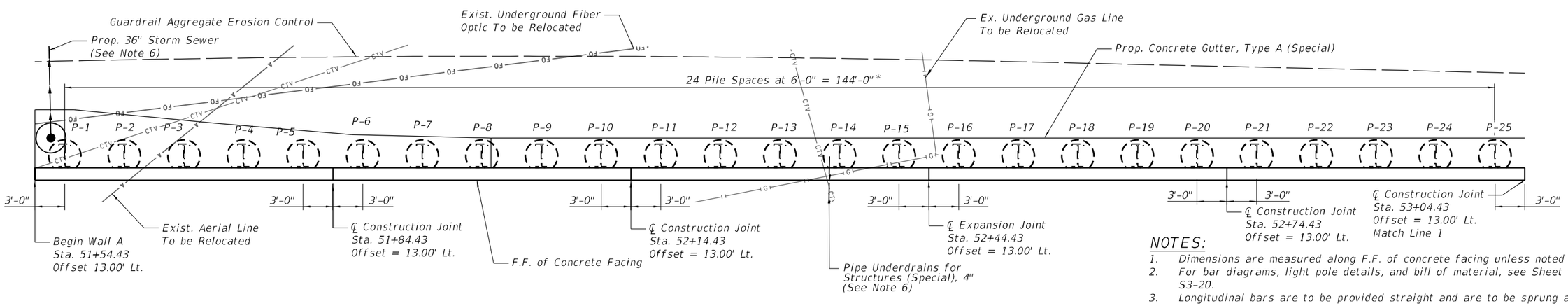

LEGEND

F.F. - Front Face
B.F. - Back Face
E.F. - Each Face

PARTIAL PLAN

* Pile spacing is denoted from center-to-center of current pile to next leading pile along wall.

NOTES:

1. Dimensions are measured along F.F. of concrete facing unless noted otherwise.
2. For bar diagrams, light pole details, and bill of material, see Sheet S3-17 and S3-20.
3. Longitudinal bars are to be provided straight and are to be sprung and tied at required radius in the field.
4. All edges shall be chamfered 3/4".
5. For Fence Details, see Sheet S3-24.
6. See Proposed Drainage Plans for drainage pipe, drainage structure, and pipe underdrain connection sizes, stations, and offsets.

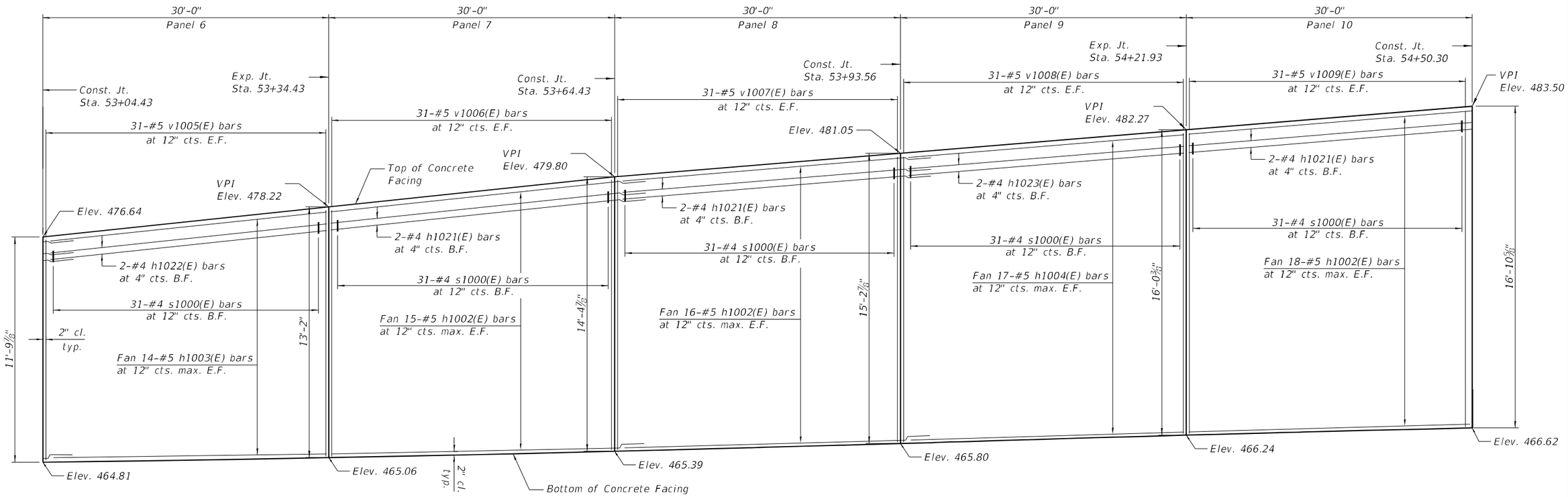

PARTIAL ELEVATION

MIN. BAR LAP

#4 Bars = 2'-11"
#5 Bars = 3'-7"

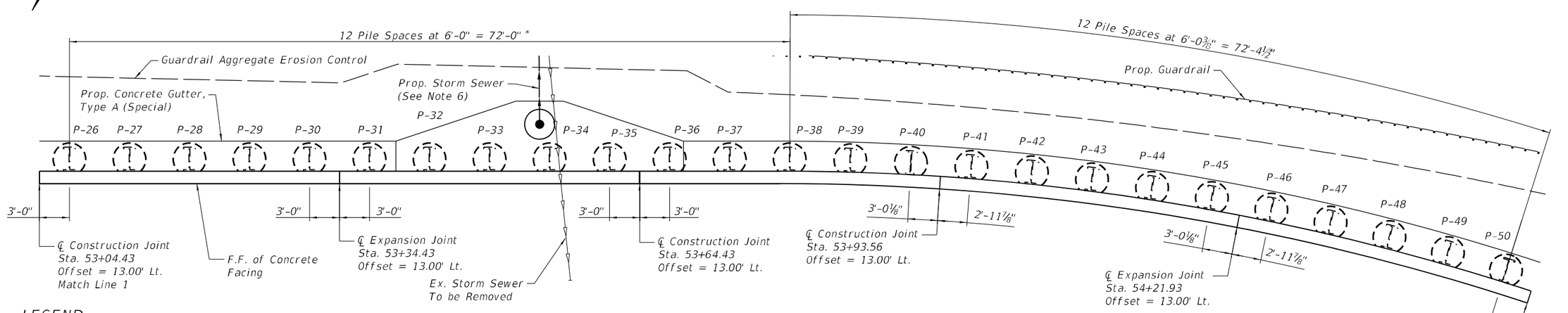

PARTIAL PLAN

* Pile spacing is denoted from center-to-center of current pile to next leading pile along wall.

LEGEND

F.F. - Front Face
B.F. - Back Face
E.F. - Each Face

NOTES:

1. See Sheet S3-6 for typical notes.

INFRASTRUCTURE ENGINEERING	USER NAME = DLamb	DESIGNED - MW	REVISED -	STATE OF ILLINOIS DEPARTMENT OF TRANSPORTATION	DETAILED PLAN AND ELEVATION 2 STRUCTURE NO. 090-8517	F.A.P. RTE.	SECTION	COUNTY	TOTAL SHEETS	SHEET NO.
		CHECKED - JTB	REVISED -			VAR.	13 (HVB, HB-3) BR-1:R	TAZEWELL	1173	774
	PLOT SCALE = 10.6666 ' / in.	DRAWN - TY	REVISED -					CONTRACT NO. 68C55		
	PLOT DATE = 6/6/2023	CHECKED - KS	REVISED -		SHEET S3-7 OF S3-38 SHEETS		ILLINOIS	FED. AID PROJECT		

MODEL: Default
FILE NAME: pw:\\mis-uscwp.bentley.com:mis-uscwp-03\Documents\Chicago IL\01 Projects\179740 IDOT Cedo\Sfxt Pkl\5.0 CADD\CAD Sheets\Retaining Wall Sheets\090S17-68C55-Wall4-007.dgn

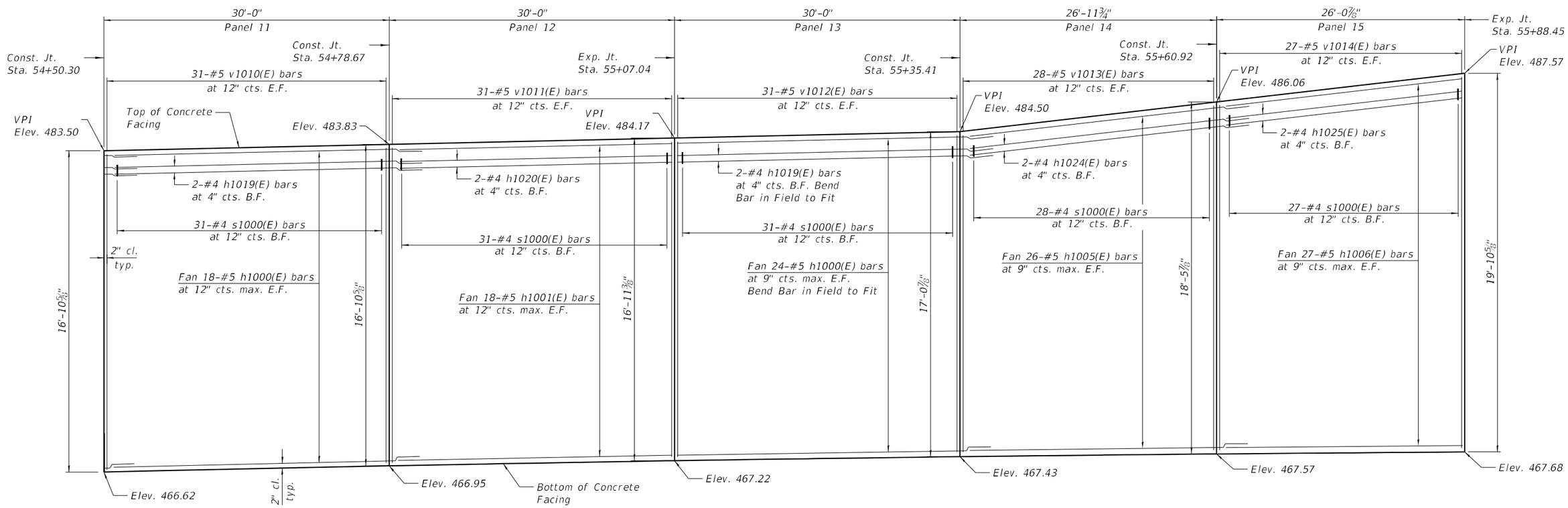

PARTIAL ELEVATION

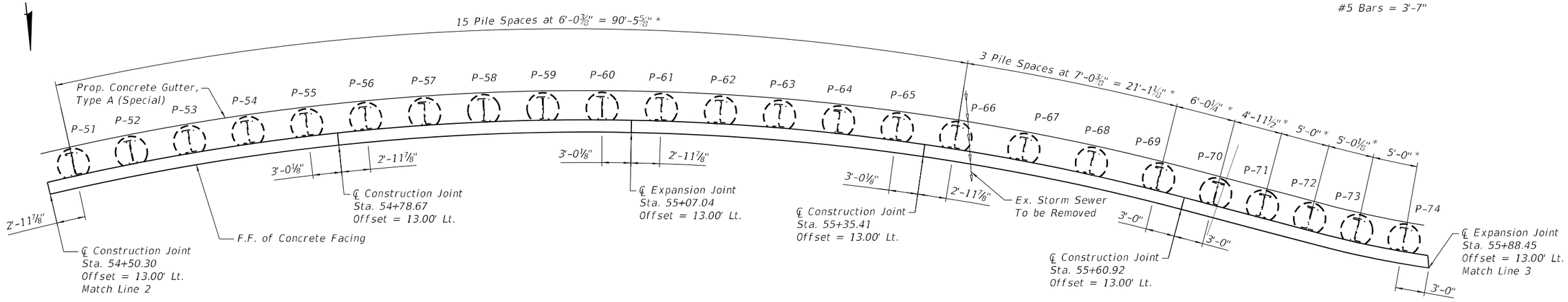

PARTIAL PLAN

* Pile spacing is denoted from center-to-center of current pile to next leading pile along wall.

MIN. BAR LAP

#4 Bars = 2'-11"
#5 Bars = 3'-7"

LEGEND

F.F. - Front Face
B.F. - Back Face
E.F. - Each Face

NOTES:

1. See Sheet S3-6 for typical notes.

INFRASTRUCTURE ENGINEERING	USER NAME = DLamb	DESIGNED - MW	REVISED -	STATE OF ILLINOIS DEPARTMENT OF TRANSPORTATION	DETAILED PLAN AND ELEVATION 3 STRUCTURE NO. 090-8517	F.A.P. RTE.	SECTION	COUNTY	TOTAL SHEETS	SHEET NO.
		CHECKED - JTB	REVISED -			VAR.	13 (HVB, HB-3) BR-1:R	TAZEWELL	1173	775
	PLOT SCALE = 10.6666 ' / in.	DRAWN - TY	REVISED -					CONTRACT NO. 68C55		
	PLOT DATE = 6/6/2023	CHECKED - KS	REVISED -		SHEET S3-8 OF S3-38 SHEETS		ILLINOIS	FED. AID PROJECT		

MODEL: Default
FILE NAME: pw:\\mwi-us-pw.bentley.com:mwi-us-pw-03\Documents\Chicago IL\01 Projects\179740 IDOT Cedo/Sfxt Phth5.0 CADD\CAD Sheets\Retaining Wall Sheets\090S17-68C55-Wall4-008.dgn

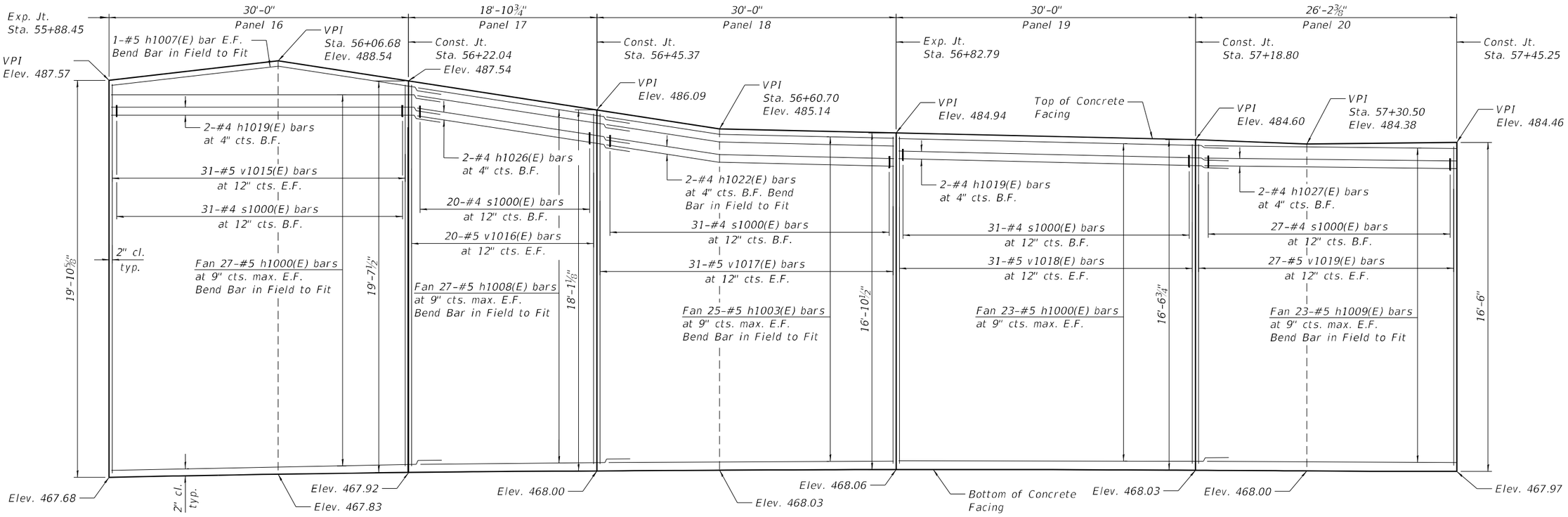

PARTIAL ELEVATION

MIN. BAR LAP

#4 Bars = 2'-11"
#5 Bars = 3'-7"

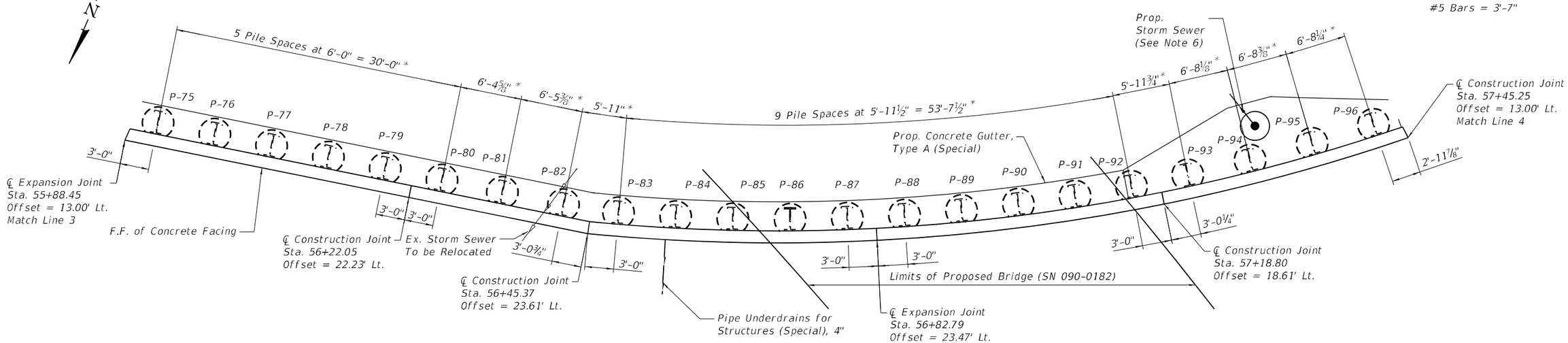

PARTIAL PLAN

* Pile spacing is denoted from center-to-center of current pile to next leading pile along wall.

LEGEND

F.F. - Front Face
B.F. - Back Face
E.F. - Each Face

NOTES:

1. See Sheet S3-6 for typical notes.

INFRASTRUCTURE ENGINEERING INCORPORATED	USER NAME = DLamb	DESIGNED - MW	REVISED -	STATE OF ILLINOIS DEPARTMENT OF TRANSPORTATION	DETAILED PLAN AND ELEVATION 4 STRUCTURE NO. 090-8517	F.A.P. RTE.	SECTION	COUNTY	TOTAL SHEETS / SHEET NO.
		CHECKED - JTB	REVISED -			VAR.	13 (HVB, HB-3) BR-1;R	TAZEWELL	1173 / 776
	PLOT SCALE = 10.6666 ' / in.	DRAWN - TY	REVISED -					CONTRACT NO. 68C55	
	PLOT DATE = 6/6/2023	CHECKED - KS	REVISED -		SHEET S3-9 OF S3-38 SHEETS		ILLINOIS	FED. AID PROJECT	

MODEL: Default
FILE NAME: pw:\\mis-iis-pw.bentley.com:mb-iis-pw-03\Documents\Chicago_IL\01 Projects\179740 IDOT Cedo-Sifex Phase 3.0 CADD\CAD Sheets\Retaining Wall Sheets\090B517-68C55-Wall4-009.dgn

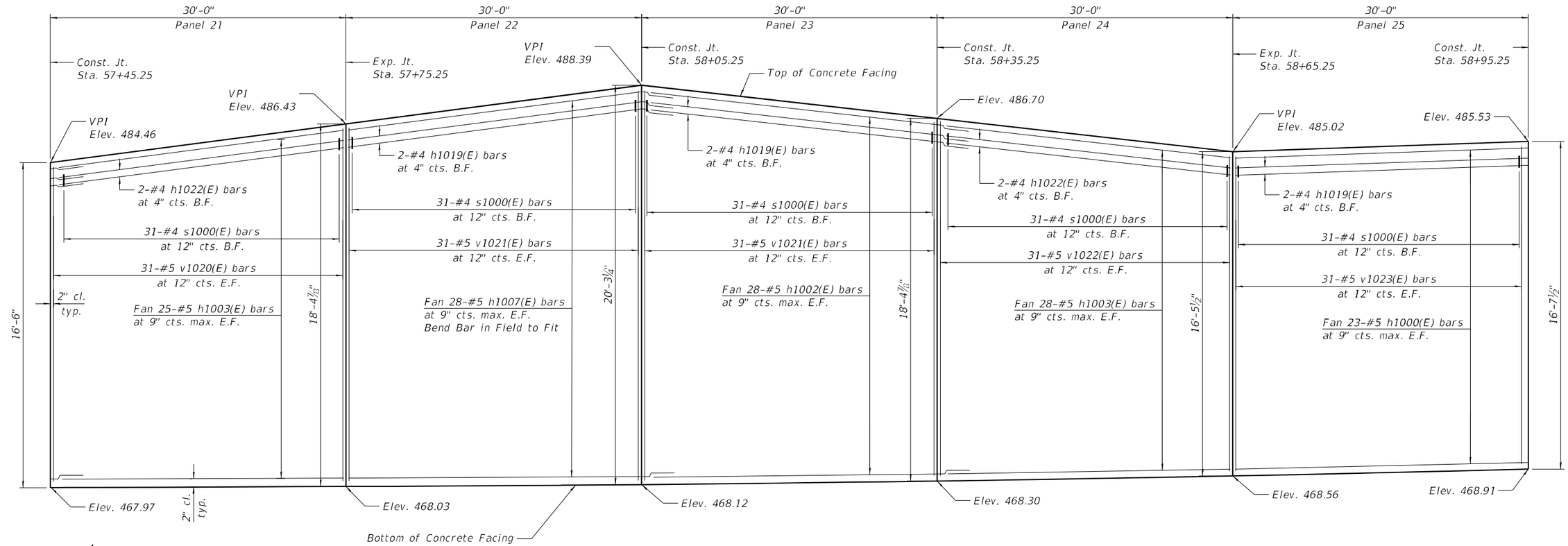

PARTIAL ELEVATION

MIN. BAR LAP

#4 Bars = 2'-11"
#5 Bars = 3'-7"

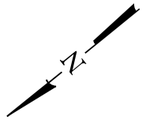

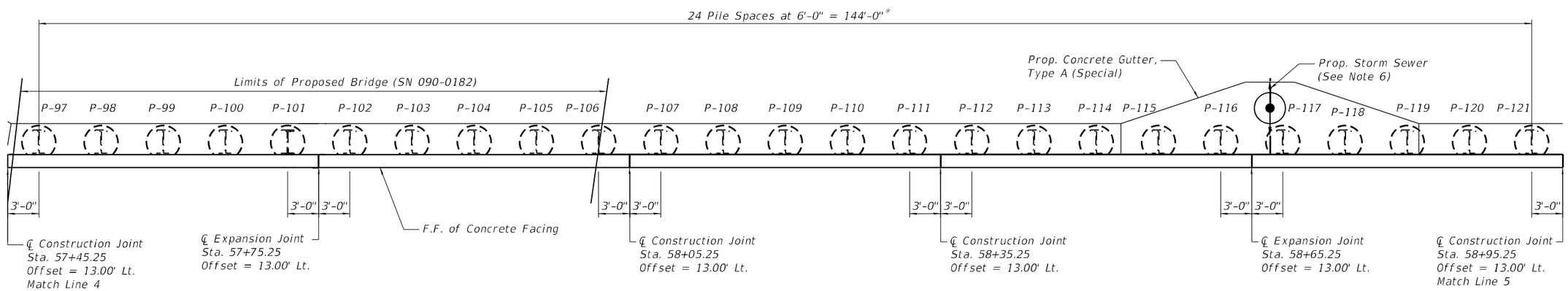

LEGEND

F.F. - Front Face
B.F. - Back Face
E.F. - Each Face

PARTIAL PLAN

* Pile spacing is denoted from center-to-center of current pile to next leading pile along wall.

NOTES:

1. See Sheet S3-6 for typical notes.

MODEL: Default
FILE NAME: pw:\\mpw-uscw.bentley.com:mb-uscw-03\Documents\Chicago IL\01 Projects\179740 IDOT Ceda-SExt PhII\5.0 CADD\CAD Sheets\Retaining Wall Sheets\0908517-68C55-Wall4-010.dgn

INFRASTRUCTURE ENGINEERING	USER NAME = DLamb	DESIGNED - MW	REVISED -	STATE OF ILLINOIS DEPARTMENT OF TRANSPORTATION	DETAILED PLAN AND ELEVATION 5 STRUCTURE NO. 090-8517
		CHECKED - JTB	REVISED -		
	PLOT SCALE = 10.6666 ' / in.	DRAWN - TY	REVISED -		
	PLOT DATE = 6/6/2023	CHECKED - KS	REVISED -		SHEET S3-10 OF S3-38 SHEETS

F.A.P. RTE.	SECTION	COUNTY	TOTAL SHEETS	SHEET NO.
VAR.	13 (HVB, HB-3) BR-1;R	TAZEWELL	1173	777
		CONTRACT NO. 68C55		
		ILLINOIS FED. AID PROJECT		

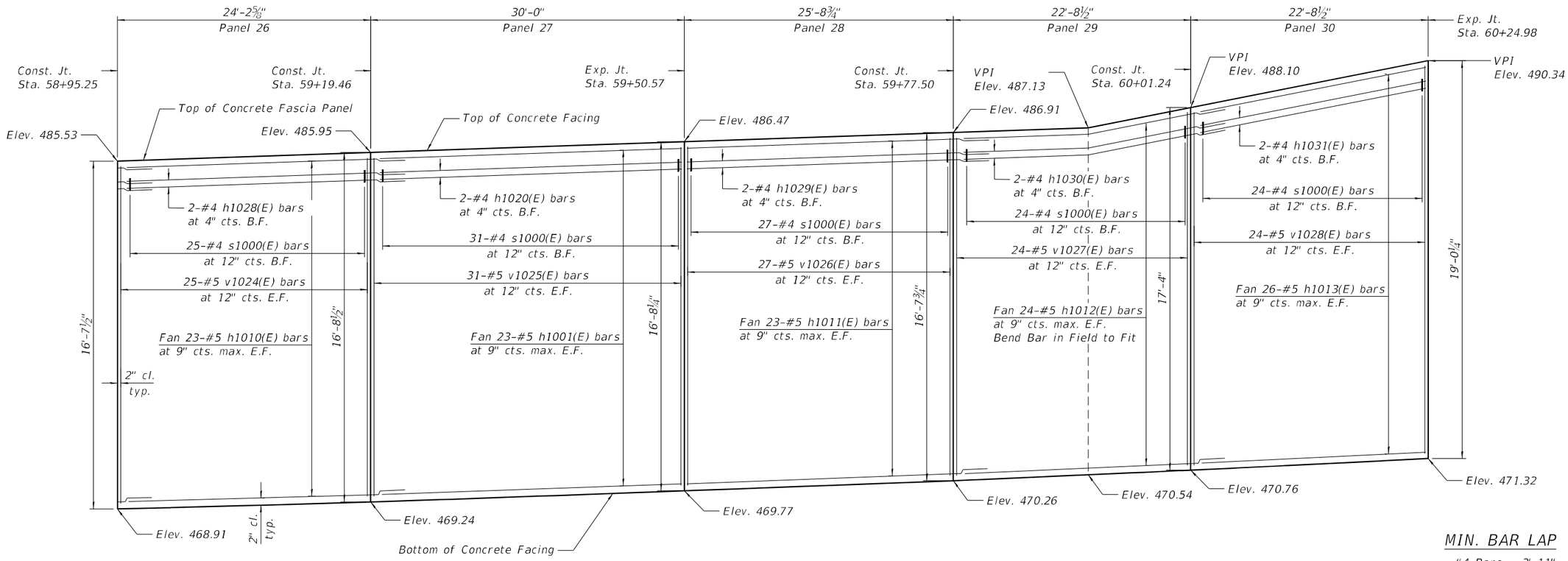

PARTIAL ELEVATION

MIN. BAR LAP

#4 Bars = 2'-11"
#5 Bars = 3'-7"

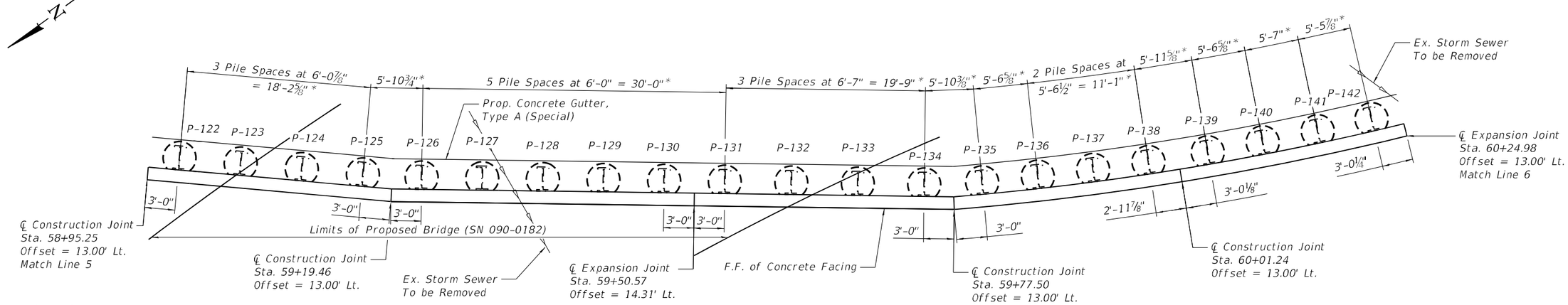

PARTIAL PLAN

* Pile spacing is denoted from center-to-center of current pile to next leading pile along wall.

LEGEND

F.F. - Front Face
B.F. - Back Face
E.F. - Each Face

NOTES:

1. See Sheet S3-6 for typical notes.

INFRASTRUCTURE ENGINEERING	USER NAME = DLamb	DESIGNED - MW	REVISED -	STATE OF ILLINOIS DEPARTMENT OF TRANSPORTATION	DETAILED PLAN AND ELEVATION 6 STRUCTURE NO. 090-8517	F.A.P. RTE.	SECTION	COUNTY	TOTAL SHEETS	SHEET NO.
		CHECKED - JTB	REVISED -			VAR.	13 (HVB, HB-3) BR-1;R	TAZEWELL	1173	778
	PLOT SCALE = 10.6666 ' / in.	DRAWN - TY	REVISED -					CONTRACT NO. 68C55		
	PLOT DATE = 6/6/2023	CHECKED - KS	REVISED -		SHEET S3-11 OF S3-38 SHEETS		ILLINOIS	FED. AID PROJECT		

MODEL: Default
FILE NAME: pw:\\mpw-uswa.bentley.com:mb-uswa-03\Documents\Chicago IL\01 Projects\179740 IDOT Cedo-SFEx Phl15.0 CADD\CAD Sheets\Retaining Wall Sheets\0908517-68C55-Wall4-011.dgn

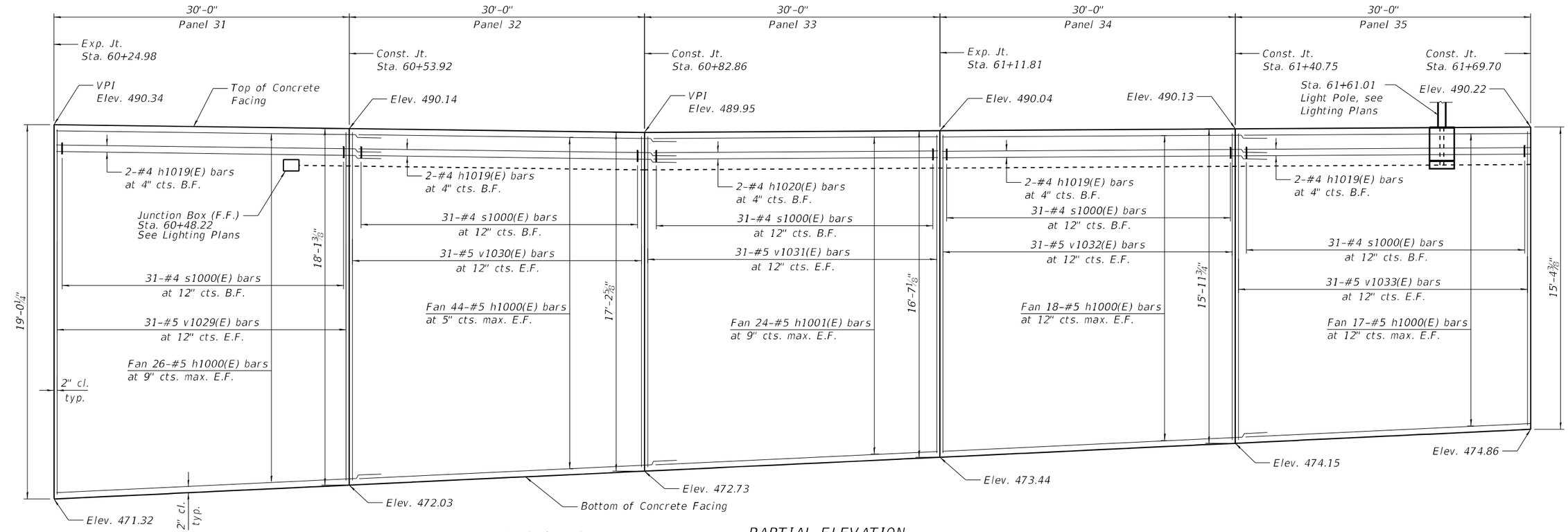

PARTIAL ELEVATION

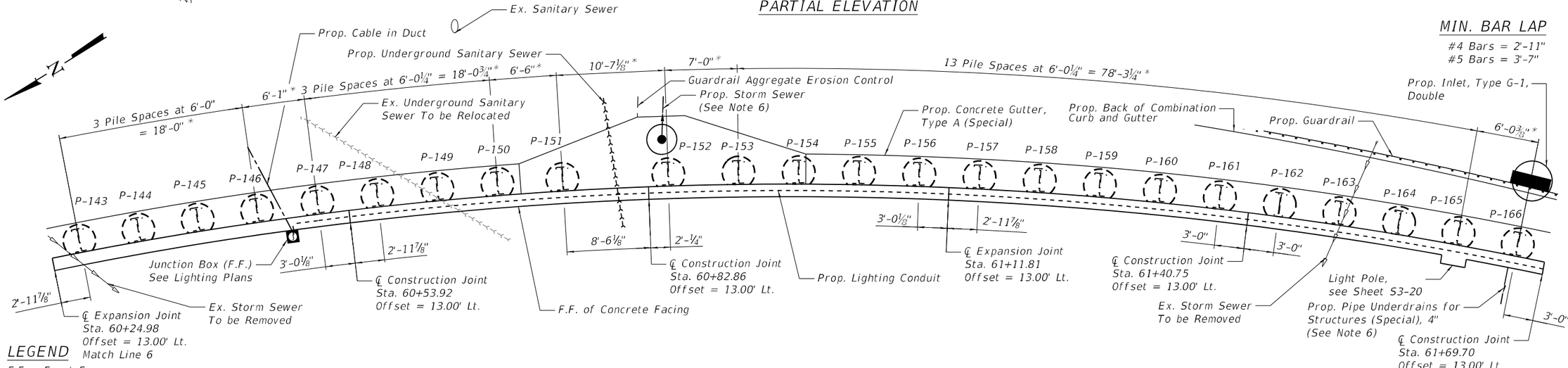

PARTIAL PLAN

* Pile spacing is denoted from center-to-center of current pile to next leading pile along wall.

MIN. BAR LAP

#4 Bars = 2'-11"
#5 Bars = 3'-7"

LEGEND

F.F. - Front Face
B.F. - Back Face
E.F. - Each Face

NOTES:

1. See Sheet S3-6 for typical notes.

INFRASTRUCTURE ENGINEERING	USER NAME = DLamb	DESIGNED - MW	REVISED -	STATE OF ILLINOIS DEPARTMENT OF TRANSPORTATION	DETAILED PLAN AND ELEVATION 7 STRUCTURE NO. 090-8517	F.A.P. RTE.	SECTION	COUNTY	TOTAL SHEETS / SHEET NO.
		CHECKED - JTB	REVISED -			VAR.	13 (HVB, HB-3) BR-1;R	TAZEWELL	1173 / 779
	PLOT SCALE = 10.6666 ' / in.	DRAWN - TY	REVISED -					CONTRACT NO. 68C55	
	PLOT DATE = 6/6/2023	CHECKED - KS	REVISED -		SHEET S3-12 OF S3-38 SHEETS		ILLINOIS	FED. AID PROJECT	

MODEL: Default
FILE NAME: pw:\\mpw-uscow.bentley.com:ds-pw-03\Documents\Chicago_IL\01 Projects\179740 IDOT Ceda-SIExt PhII\5.0 CADD\CAD Sheets\Retaining Wall Sheets\090S517-68C55-WallA-012.dgn

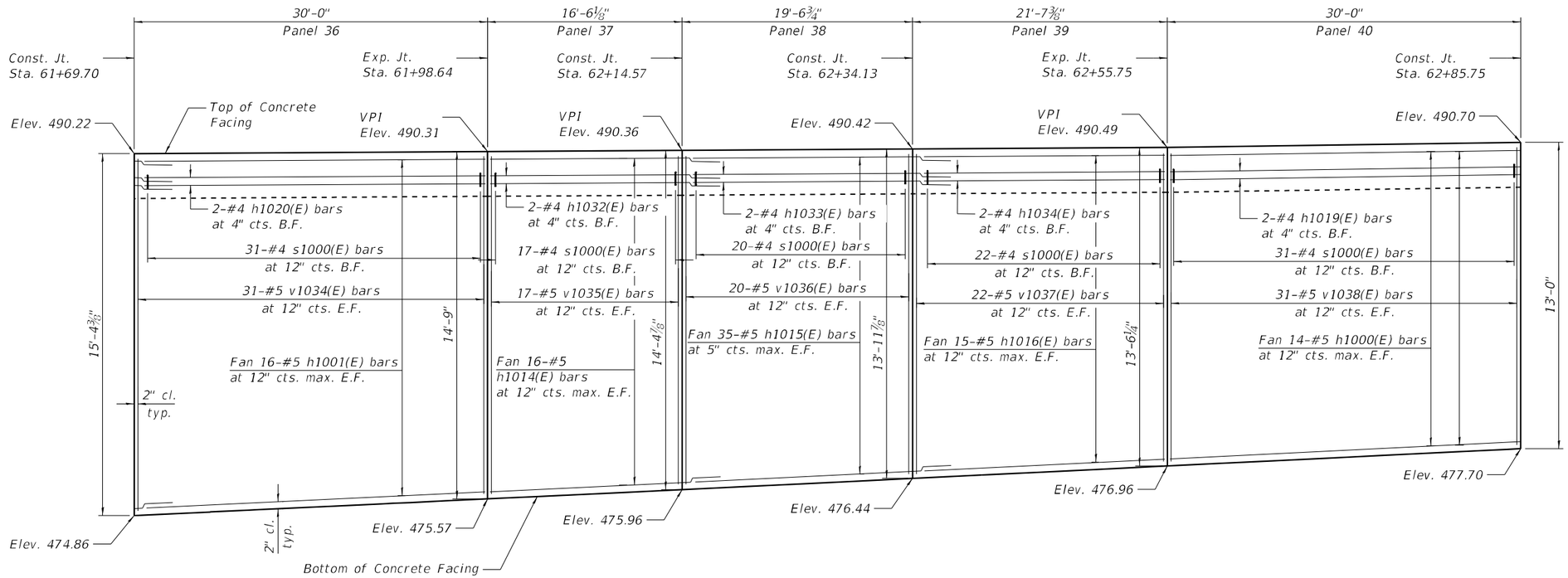

PARTIAL ELEVATION

MIN. BAR LAP

#4 Bars = 2'-11"
#5 Bars = 3'-7"

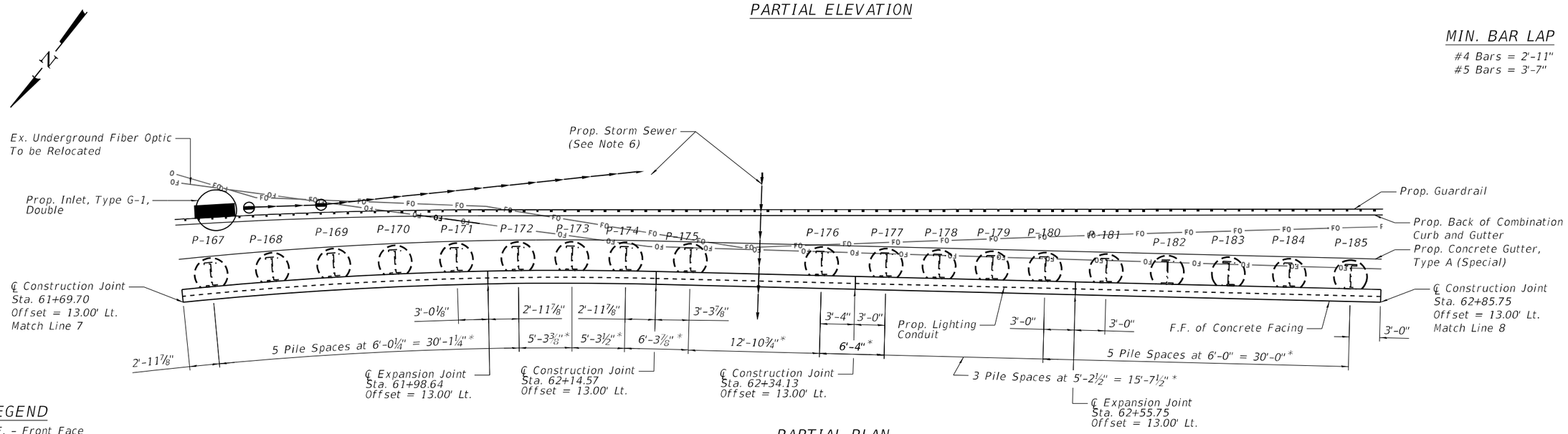

PARTIAL PLAN

* Pile spacing is denoted from center-to-center of current pile to next leading pile along wall.

LEGEND

F.F. - Front Face
B.F. - Back Face
E.F. - Each Face

NOTES:

1. See Sheet S3-6 for typical notes.

INFRASTRUCTURE ENGINEERING	USER NAME = DLamb	DESIGNED - MW	REVISED -
		CHECKED - JTB	REVISED -
	PLOT SCALE = 10.6666 ' / in.	DRAWN - TY	REVISED -
	PLOT DATE = 6/6/2023	CHECKED - KS	REVISED -

STATE OF ILLINOIS
DEPARTMENT OF TRANSPORTATION

DETAILED PLAN AND ELEVATION 8
STRUCTURE NO. 090-8517

SHEET S3-13 OF S3-38 SHEETS

F.A.P. RTE.	SECTION	COUNTY	TOTAL SHEETS	SHEET NO.
VAR.	13 (HVB, HB-3) BR-1;R	TAZEWELL	1173	780
		CONTRACT NO. 68C55		
		ILLINOIS FED. AID PROJECT		

MODEL: Default
FILE NAME: pw:\\ims-ix-pw.bentley.com:ims-ix-pw-03\Documents\Chicago_ILIOI_Projects\179740 IDOT Cedo\SIEx1 PhII\5.0 CADD\CAD Sheets\Retaining Wall Sheets\090851 7-68C55-Wall-013.dgn

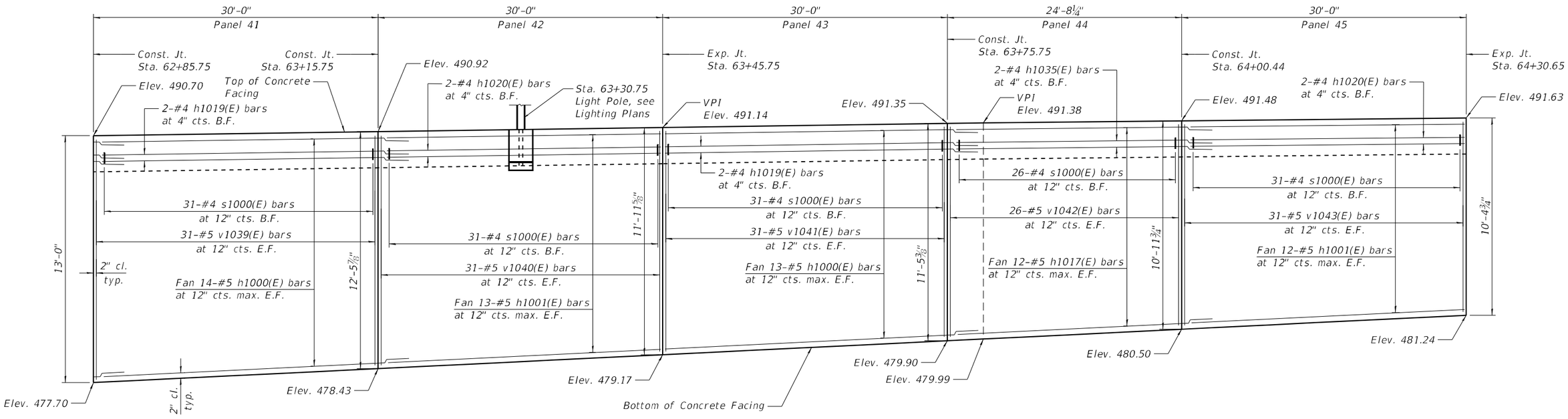

PARTIAL ELEVATION

MIN. BAR LAP

#4 Bars = 2'-11"
#5 Bars = 3'-7"

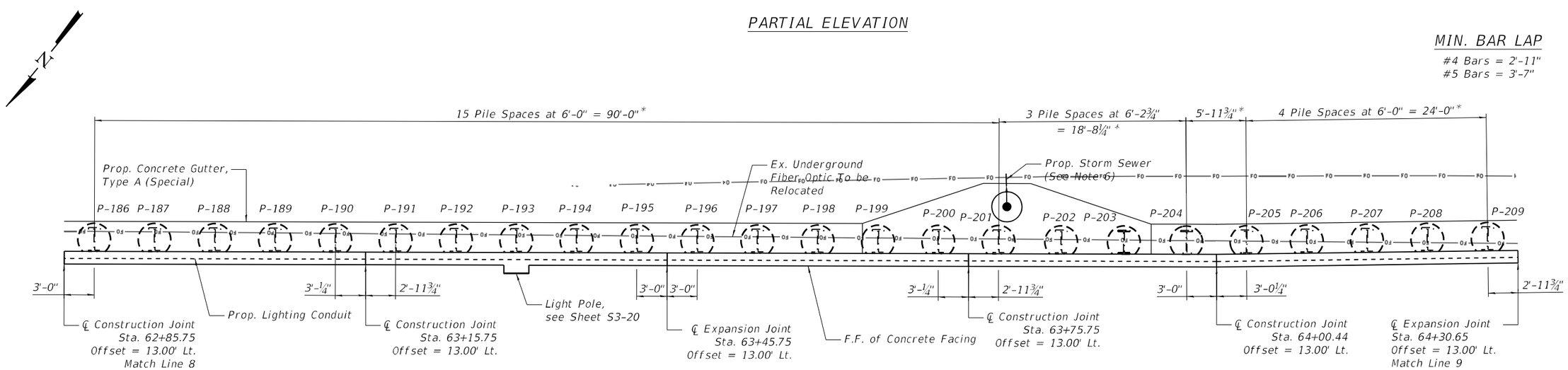

PARTIAL PLAN

* Pile spacing is denoted from center-to-center of current pile to next leading pile along wall.

LEGEND

F.F. - Front Face
B.F. - Back Face
E.F. - Each Face

NOTES:

1. See Sheet S3-6 for typical notes.

MODEL: Default
FILE NAME: pw:\\mis-iu-pw.bentley.com:mb-iu-pw-03:Documents\Chicago IL\01 Projects\179740 IDOT Cedo\Site 1 PhII\5.0 CADD\CAD Sheets\Retaining Wall Sheets\0908517-68C55-Wall-014.dgn

INFRASTRUCTURE ENGINEERING INCORPORATED	USER NAME = DLamb	DESIGNED - MW	REVISED -	STATE OF ILLINOIS DEPARTMENT OF TRANSPORTATION	DETAILED PLAN AND ELEVATION 9 STRUCTURE NO. 090-8517	F.A.P. RTE.	SECTION	COUNTY	TOTAL SHEETS / SHEET NO.
		CHECKED - JTB	REVISED -			VAR.	13 (HVB, HB-3) BR-1;R	TAZEWELL	1173 / 781
	PLOT SCALE = 10.6666 ' / in.	DRAWN - TY	REVISED -					CONTRACT NO. 68C55	
	PLOT DATE = 6/6/2023	CHECKED - KS	REVISED -		SHEET S3-14 OF S3-38 SHEETS			ILLINOIS FED. AID PROJECT	

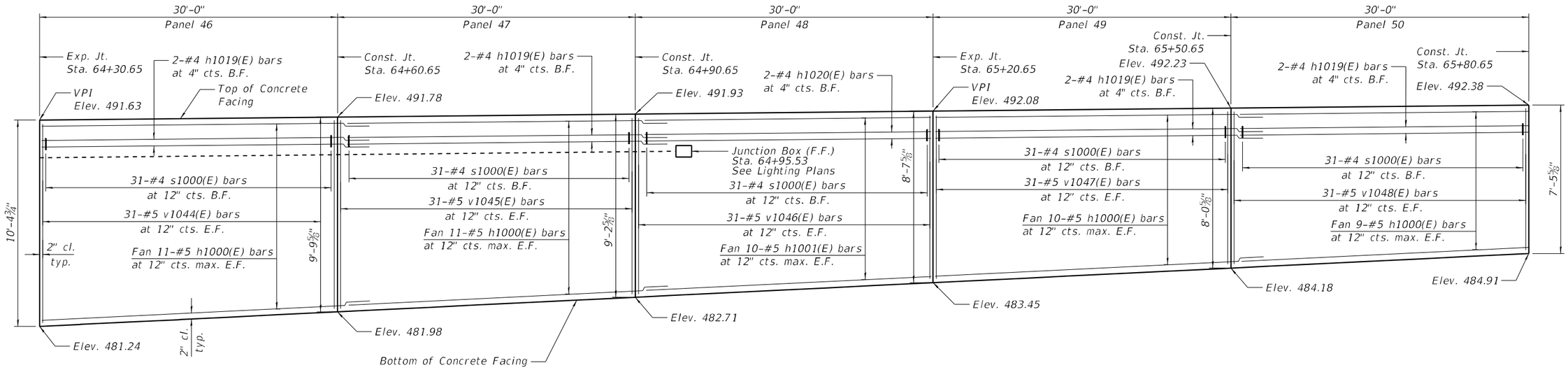

PARTIAL ELEVATION

MIN. BAR LAP

#4 Bars = 2'-11"
#5 Bars = 3'-7"

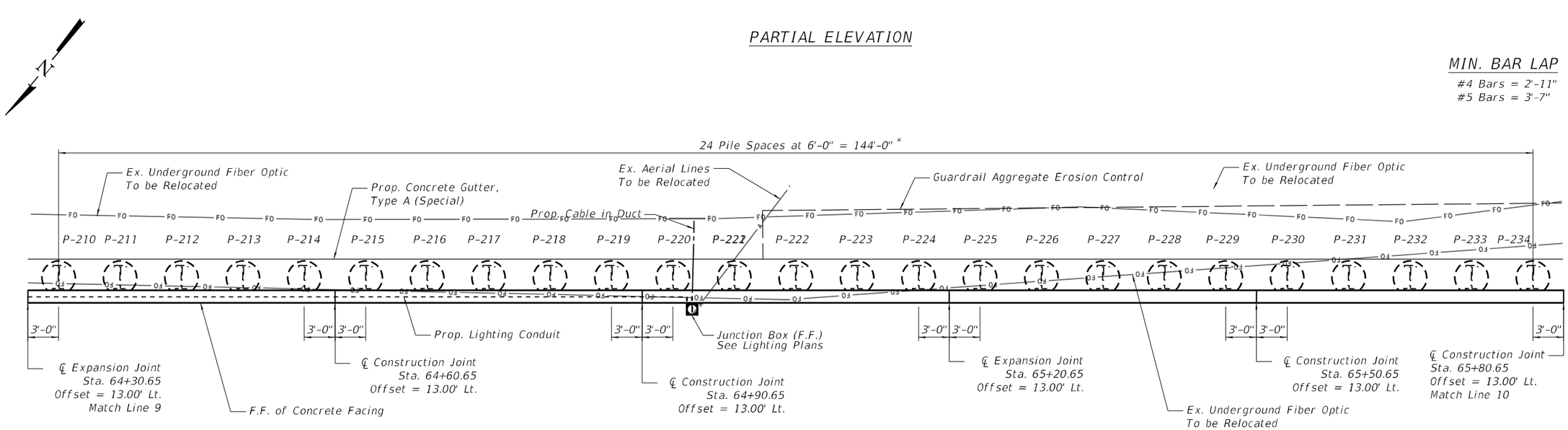

PARTIAL PLAN

* Pile spacing is denoted from center-to-center of current pile to next leading pile along wall.

LEGEND

F.F. - Front Face
B.F. - Back Face
E.F. - Each Face

NOTES:

1. See Sheet S3-6 for typical notes.

INFRASTRUCTURE ENGINEERING INCORPORATED	USER NAME = DLamb	DESIGNED - MW	REVISED -	STATE OF ILLINOIS DEPARTMENT OF TRANSPORTATION	DETAILED PLAN AND ELEVATION 10 STRUCTURE NO. 090-8517	F.A.P. RTE.	SECTION	COUNTY	TOTAL SHEETS / SHEET NO.
		CHECKED - JTB	REVISED -			VAR.	13 (HVB, HB-3) BR-1;R	TAZEWELL	1173 / 782
	PLOT SCALE = 10.6666 ' / in.	DRAWN - TY	REVISED -					CONTRACT NO. 68C55	
	PLOT DATE = 6/6/2023	CHECKED - KS	REVISED -		SHEET S3-15 OF S3-38 SHEETS			ILLINOIS FED. AID PROJECT	

MODEL: Default
FILE NAME: pw:\\mis-iis-pw.bentley.com:mb-iis-pw-03\Documents\Chicago IL\01 Projects\179740 IDOT Cedo\SIEx Phll5.0 CADD\CAD Sheets\Retaining Wall Sheets\0908517-68C55-Wall-015.dgn

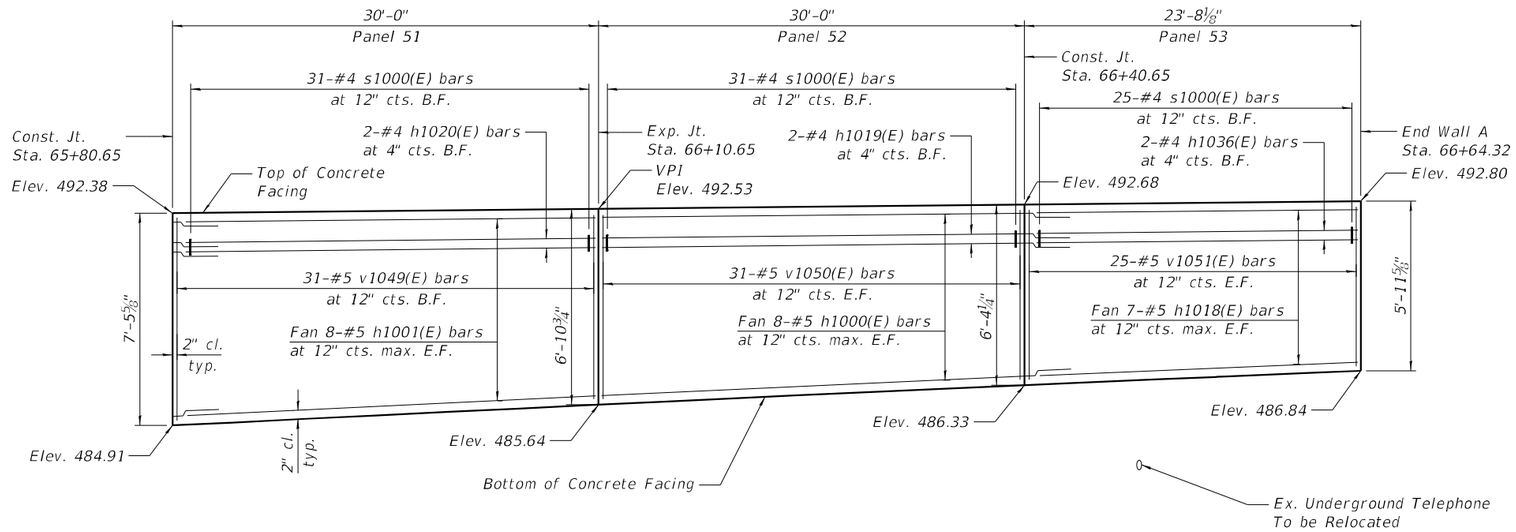

PARTIAL ELEVATION

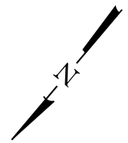

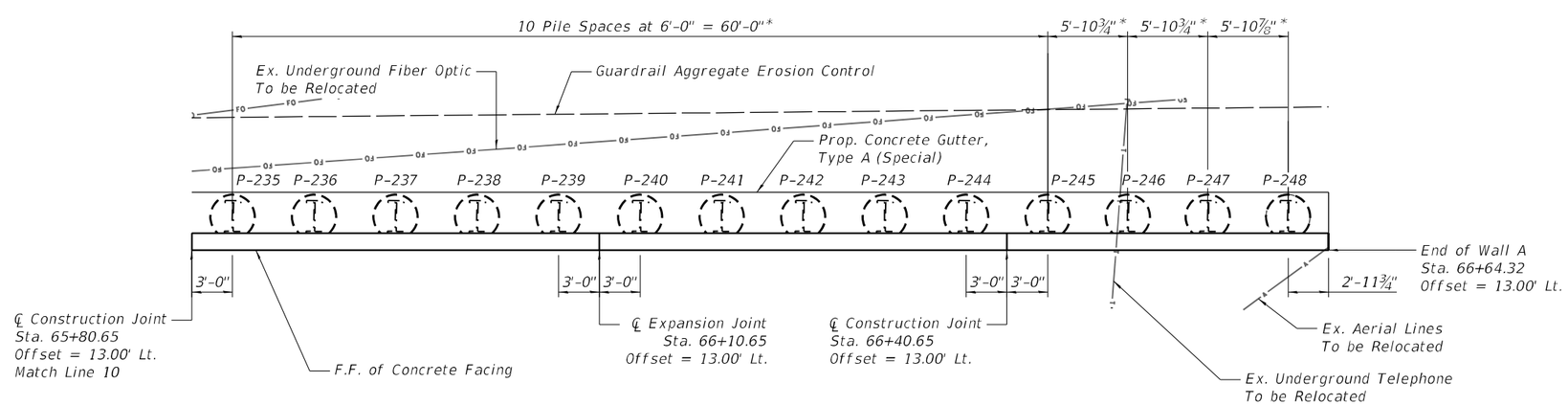

PARTIAL PLAN

* Pile spacing is denoted from center-to-center of current pile to next leading pile along wall.

MIN. BAR LAP

#4 Bars = 2'-11"
#5 Bars = 3'-7"

LEGEND

F.F. - Front Face
B.F. - Back Face
E.F. - Each Face

NOTES:

1. See Sheet S3-6 for typical notes.

INFRASTRUCTURE ENGINEERING INCORPORATED	USER NAME = DLamb	DESIGNED - MW	REVISED -	STATE OF ILLINOIS DEPARTMENT OF TRANSPORTATION	DETAILED PLAN AND ELEVATION 11 STRUCTURE NO. 090-8517	F.A.P. RTE.	SECTION	COUNTY	TOTAL SHEETS / SHEET NO.
		CHECKED - JTB	REVISED -			VAR.	13 (HVB, HB-3) 8R-1:R	TAZEWELL	1173 / 783
	PLOT SCALE = 10.6666 ' / in.	DRAWN - TY	REVISED -					CONTRACT NO. 68C55	
	PLOT DATE = 6/6/2023	CHECKED - KS	REVISED -		SHEET S3-16 OF S3-38 SHEETS		ILLINOIS	FED. AID PROJECT	

MODEL: Default
FILE NAME: pw:\\ms-us-pw.bentley.com:mb-us-pw-03\Documents\Chicago IL\01 Projects\179740 IDOT Ceda\SIE\+ Phll\5.0 CADD\CAD Sheets\Retaining Wall Sheets\090851\7-68C55-Wall4-038.dgn

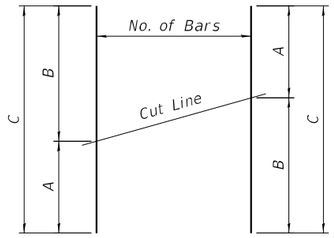

FIELD CUTTING DIAGRAM

See table for dimensions. Make all cuts normal to bar axis.

BAR TABLE SCHEDULE

Bar	No. of Sets Req'd	Bar No.	No. of Bars Per Set	A	B	C
v1000(E)	1	#5	31	5'-2"	6'-1"	11'-3"
v1001(E)	1	#5	31	6'-1"	6'-11"	13'-0"
v1002(E)	1	#5	31	6'-11"	8'-6"	15'-5"
v1003(E)	1	#5	31	8'-6"	10'-0"	18'-6"
v1004(E)	1	#5	31	10'-0"	11'-5"	21'-5"
v1005(E)	1	#5	31	11'-5"	12'-10"	24'-3"
v1006(E)	1	#5	31	12'-10"	14'-0"	26'-10"
v1007(E)	1	#5	31	14'-0"	14'-10"	28'-10"
v1008(E)	1	#5	31	14'-10"	15'-8"	30'-6"
v1009(E)	1	#5	31	15'-8"	16'-6"	32'-2"
v1010(E)	1	#5	31	16'-6"	16'-6"	33'-0"
v1011(E)	1	#5	31	16'-6"	16'-7"	33'-1"
v1012(E)	1	#5	31	16'-7"	16'-8"	33'-3"
v1013(E)	1	#5	28	16'-8"	18'-1"	34'-9"
v1014(E)	1	#5	27	18'-1"	19'-6"	37'-7"
v1015(E)	1	#5	31	20'-4"	19'-3"	39'-7"
v1016(E)	1	#5	20	19'-3"	17'-9"	37'-0"
v1017(E)	1	#5	31	17'-9"	16'-6"	34'-3"
v1018(E)	1	#5	31	16'-6"	16'-2"	32'-8"
v1019(E)	1	#5	27	16'-2"	16'-2"	32'-4"
v1020(E)	1	#5	31	16'-2"	18'-0"	34'-2"
v1021(E)	2	#5	31	19'-11"	18'-0"	37'-11"
v1022(E)	1	#5	31	18'-0"	16'-1"	34'-1"
v1023(E)	1	#5	31	16'-1"	16'-3"	32'-4"
v1024(E)	1	#5	25	16'-3"	16'-4"	32'-7"
v1025(E)	1	#5	31	16'-4"	16'-4"	32'-8"
v1026(E)	1	#5	27	16'-4"	16'-3"	32'-7"
v1027(E)	1	#5	24	16'-3"	17'-0"	33'-3"
v1028(E)	1	#5	24	17'-0"	18'-8"	35'-8"
v1029(E)	1	#5	31	18'-8"	17'-9"	36'-5"
v1030(E)	1	#5	31	17'-9"	16'-10"	34'-7"
v1031(E)	1	#5	31	16'-10"	16'-3"	33'-1"
v1032(E)	1	#5	31	16'-3"	15'-7"	31'-10"
v1033(E)	1	#5	31	15'-7"	15'-0"	30'-7"
v1034(E)	1	#5	31	15'-0"	14'-5"	29'-5"
v1035(E)	1	#5	17	14'-5"	14'-0"	28'-5"
v1036(E)	1	#5	20	14'-0"	13'-7"	27'-7"
v1037(E)	1	#5	22	13'-7"	13'-2"	26'-9"
v1038(E)	1	#5	31	13'-2"	12'-8"	25'-10"
v1039(E)	1	#5	31	12'-8"	12'-1"	24'-9"
v1040(E)	1	#5	31	12'-1"	11'-7"	23'-8"
v1041(E)	1	#5	31	11'-7"	11'-1"	22'-8"
v1042(E)	1	#5	26	11'-1"	10'-7"	21'-8"
v1043(E)	1	#5	31	10'-7"	10'-0"	20'-7"
v1044(E)	1	#5	31	10'-0"	9'-5"	19'-5"
v1045(E)	1	#5	31	9'-5"	8'-10"	18'-3"
v1046(E)	1	#5	31	8'-10"	8'-3"	17'-1"
v1047(E)	1	#5	31	8'-3"	7'-8"	15'-11"
v1048(E)	1	#5	31	7'-8"	7'-1"	14'-9"
v1049(E)	1	#5	31	7'-1"	6'-6"	13'-7"
v1050(E)	1	#5	31	6'-6"	6'-0"	12'-6"
v1051(E)	1	#5	25	6'-0"	5'-7"	11'-7"

BILL OF MATERIAL

Bar	No.	Size	Length	Shape
h1000(E)	650	#5	33'-7"	
h1001(E)	268	#5	29'-8"	
h1002(E)	202	#5	33'-9"	
h1003(E)	184	#5	29'-10"	
h1004(E)	34	#5	29'-9"	
h1005(E)	52	#5	30'-7"	
h1006(E)	54	#5	25'-9"	
h1007(E)	58	#5	33'-11"	
h1008(E)	54	#5	22'-7"	
h1009(E)	46	#5	29'-11"	
h1010(E)	46	#5	27'-10"	
h1011(E)	46	#5	29'-4"	
h1012(E)	48	#5	26'-4"	
h1013(E)	52	#5	22'-5"	
h1014(E)	32	#5	20'-1"	
h1015(E)	70	#5	23'-2"	
h1016(E)	30	#5	21'-4"	
h1017(E)	24	#5	28'-3"	
h1018(E)	14	#5	23'-4"	
h1019(E)	42	#4	32'-11"	
h1020(E)	18	#4	29'-8"	
h1021(E)	10	#4	33'-1"	
h1022(E)	8	#4	29'-10"	
h1023(E)	2	#4	29'-9"	
h1024(E)	2	#4	29'-11"	
h1025(E)	2	#4	25'-9"	
h1026(E)	2	#4	21'-11"	
h1027(E)	2	#4	29'-3"	
h1028(E)	2	#4	27'-2"	
h1029(E)	2	#4	28'-8"	
h1030(E)	2	#4	25'-8"	
h1031(E)	2	#4	22'-5"	
h1032(E)	2	#4	19'-5"	
h1033(E)	2	#4	22'-6"	
h1034(E)	2	#4	21'-4"	
h1035(E)	2	#4	27'-7"	
h1036(E)	2	#4	23'-4"	
s1000(E)	1,552	#4	2'-5"	
v1000(E)	31	#5	11'-3"	
v1001(E)	31	#5	13'-0"	
v1002(E)	31	#5	15'-5"	
v1003(E)	31	#5	18'-6"	
v1004(E)	31	#5	21'-5"	
v1005(E)	31	#5	24'-3"	
v1006(E)	31	#5	26'-10"	
v1007(E)	31	#5	28'-10"	
v1008(E)	31	#5	30'-6"	
v1009(E)	31	#5	32'-2"	
v1010(E)	31	#5	33'-0"	
v1011(E)	31	#5	33'-1"	

BILL OF MATERIAL

Bar	No.	Size	Length	Shape
v1012(E)	31	#5	33'-3"	
v1013(E)	28	#5	34'-9"	
v1014(E)	27	#5	37'-7"	
v1015(E)	31	#5	38'-9"	
v1016(E)	20	#5	37'-0"	
v1017(E)	31	#5	34'-3"	
v1018(E)	31	#5	32'-8"	
v1019(E)	27	#5	32'-4"	
v1020(E)	31	#5	34'-2"	
v1021(E)	62	#5	37'-11"	
v1022(E)	31	#5	34'-1"	
v1023(E)	31	#5	32'-4"	
v1024(E)	25	#5	32'-7"	
v1025(E)	31	#5	32'-8"	
v1026(E)	27	#5	32'-7"	
v1027(E)	24	#5	33'-3"	
v1028(E)	24	#5	35'-8"	
v1029(E)	31	#5	36'-5"	
v1030(E)	31	#5	34'-7"	
v1031(E)	31	#5	33'-1"	
v1032(E)	31	#5	31'-10"	
v1033(E)	31	#5	30'-7"	
v1034(E)	31	#5	29'-5"	
v1035(E)	17	#5	28'-5"	
v1036(E)	20	#5	27'-7"	
v1037(E)	22	#5	26'-9"	
v1038(E)	31	#5	25'-10"	
v1039(E)	31	#5	24'-9"	
v1040(E)	31	#5	23'-8"	
v1041(E)	31	#5	22'-8"	
v1042(E)	26	#5	21'-8"	
v1043(E)	31	#5	20'-7"	
v1044(E)	31	#5	19'-5"	
v1045(E)	31	#5	18'-3"	
v1046(E)	31	#5	17'-1"	
v1047(E)	31	#5	15'-11"	
v1048(E)	31	#5	14'-9"	
v1049(E)	31	#5	13'-7"	
v1050(E)	31	#5	12'-6"	
v1051(E)	25	#5	11'-7"	
d1000(E)	6	#6	7'-8"	
d1001(E)	20	#6	9'-1"	
Concrete Structures			Cu. Yd.	983.3
Reinforcement Bars, Epoxy Coated			Pound	111,330

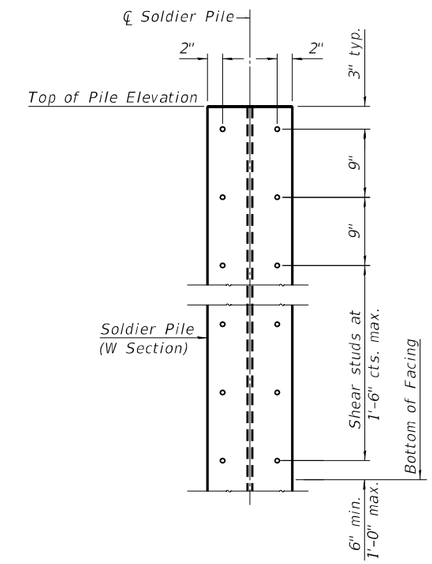

SHEAR STUD DETAIL

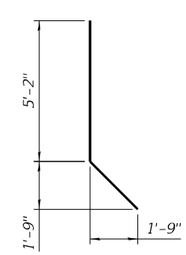

BAR d1000(E)

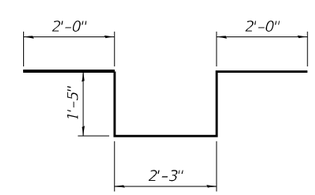

BAR d1001(E)

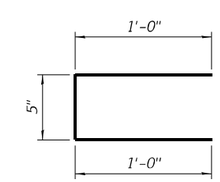

BAR s1000(E)

MODEL: Default
FILE NAME: pw:\\mb-ic-pw.bentley.com:mb-ic-pw-03\Documents\Chicago IL\01 Projects\179740 IDOT Cedar\Sheet Phil\5.0 CADD\CAD Sheets\Retaining Wall Sheets\0908517-68C55-Wall-016.dgn

INFRASTRUCTURE ENGINEERING | INCORPORATED

USER NAME = DLamb	DESIGNED - TY	REVISED -
	CHECKED - KS	REVISED -
PLOT SCALE = 0.1667 ' / in.	DRAWN - TY	REVISED -
PLOT DATE = 6/6/2023	CHECKED - KS	REVISED -

STATE OF ILLINOIS
DEPARTMENT OF TRANSPORTATION

WALL A BILL OF MATERIAL
STRUCTURE NO. 090–8517

SHEET S3-17 OF S3-38 SHEETS

F.A.P. RTE.	SECTION	COUNTY	TOTAL SHEETS	SHEET NO.
VAR.	13 (HVB, HB-3) BR-1:R	TAZEWELL	1173	784
		CONTRACT NO. 68C55		
	ILLINOIS	FED. AID PROJECT		

PILE SCHEDULE 1

Pile Number	Pile Type	Station	Offset	Top of Pile Elevation	Pile Tip Elevation	Estimated Top of Rock Elevation	Estimated Pile Length	Number of Studs per Pile	Top of Encasement Elevation	Encasement Diameter (Inches)
01	W18X76	51+57.43	15.44'	467.72	442.72	433.00	25'-0"	8	464.81	30
02	W18X76	51+63.43	15.44'	467.87	442.87	433.00	25'-0"	8	464.79	30
03	W18X76	51+69.43	15.44'	468.02	443.02	433.00	25'-0"	8	464.77	30
04	W18X76	51+75.43	15.44'	468.17	443.17	433.00	25'-0"	8	464.75	30
05	W18X76	51+81.43	15.44'	468.32	443.32	433.00	25'-0"	8	464.73	30
06	W18X76	51+87.43	15.44'	468.47	443.47	433.00	25'-0"	8	464.71	30
07	W18X76	51+93.43	15.44'	468.62	443.62	433.00	25'-0"	8	464.69	30
08	W18X76	51+99.43	15.44'	468.77	443.77	433.00	25'-0"	8	464.67	30
09	W18X76	52+05.43	15.44'	468.92	443.92	433.00	25'-0"	10	464.65	30
10	W18X76	52+11.43	15.44'	469.07	444.07	433.00	25'-0"	10	464.63	30
11	W18X76	52+17.43	15.44'	469.31	444.31	433.00	25'-0"	10	464.61	30
12	W18X76	52+23.43	15.44'	469.62	444.62	433.00	25'-0"	10	464.61	30
13	W18X76	52+29.43	15.44'	469.94	444.94	433.00	25'-0"	10	464.60	30
14	W18X76	52+35.43	15.44'	470.26	445.26	433.00	25'-0"	10	464.60	30
15	W18X76	52+41.43	15.44'	470.57	445.57	433.00	25'-0"	12	464.59	30
16	W18X119	52+47.43	15.44'	470.89	431.89	433.00	39'-0"	12	464.60	30
17	W18X119	52+53.43	15.44'	471.20	432.20	433.00	39'-0"	12	464.61	30
18	W18X119	52+59.43	15.44'	471.52	432.52	433.00	39'-0"	12	464.63	30
19	W18X119	52+65.43	15.44'	471.84	432.84	433.00	39'-0"	12	464.64	30
20	W18X119	52+71.43	15.44'	472.15	433.15	433.00	39'-0"	14	464.65	30
21	W18X119	52+77.43	15.44'	472.47	433.47	433.00	39'-0"	14	464.68	30
22	W18X119	52+83.43	15.44'	472.78	433.78	433.00	39'-0"	14	464.71	30
23	W18X119	52+89.43	15.44'	473.10	434.10	433.00	39'-0"	14	464.74	30
24	W18X119	52+95.43	15.44'	473.42	434.42	433.00	39'-0"	14	464.77	30
25	W18X119	53+01.43	15.44'	473.73	434.73	433.00	39'-0"	16	464.80	30
26	W18X119	53+07.43	15.44'	474.05	435.05	433.00	39'-0"	16	464.83	30
27	W18X119	53+13.43	15.44'	474.36	435.36	433.00	39'-0"	16	464.88	30
28	W18X119	53+19.43	15.44'	474.68	435.68	433.00	39'-0"	16	464.93	30
29	W18X119	53+25.43	15.44'	475.00	436.00	433.00	39'-0"	16	464.98	30
30	W18X119	53+31.43	15.44'	475.31	436.31	433.00	39'-0"	18	465.03	30
31	W18X119	53+37.43	15.44'	475.63	436.63	433.00	39'-0"	18	465.09	30
32	W18X119	53+43.43	15.44'	475.94	436.94	433.00	39'-0"	18	465.16	30
33	W18X119	53+49.43	15.44'	476.26	437.26	433.00	39'-0"	18	465.22	30
34	W18X119	53+55.43	15.44'	476.58	437.58	433.00	39'-0"	18	465.29	30
35	W18X119	53+61.43	15.44'	476.89	437.89	433.00	39'-0"	18	465.36	30
36	W18X119	53+67.43	15.44'	477.18	438.18	433.00	39'-0"	18	465.43	30
37	W18X119	53+73.43	15.44'	477.44	438.44	433.00	39'-0"	20	465.52	30
38	W18X119	53+79.37	15.44'	477.69	438.69	433.00	39'-0"	20	465.60	30
39	W18X119	53+85.04	15.44'	477.94	438.94	433.00	39'-0"	20	465.68	30
40	W18X119	53+90.72	15.44'	478.18	439.18	433.00	39'-0"	20	465.76	30
41	W18X119	53+96.39	15.44'	478.42	439.42	433.00	39'-0"	20	465.84	30
42	W18X119	54+02.06	15.44'	478.67	439.67	433.00	39'-0"	20	465.93	30
43	W18X119	54+07.74	15.44'	478.91	439.91	433.00	39'-0"	20	466.02	30
44	W18X119	54+13.41	15.44'	479.15	440.15	433.00	39'-0"	20	466.10	30
45	W18X119	54+19.09	15.44'	479.40	440.40	433.00	39'-0"	20	466.19	30
46	W18X119	54+24.76	15.44'	479.64	440.64	433.00	39'-0"	22	466.27	30
47	W18X119	54+30.43	15.44'	479.89	440.89	433.00	39'-0"	22	466.35	30
48	W18X119	54+36.11	15.44'	480.13	441.13	433.00	39'-0"	22	466.43	30
49	W18X119	54+41.78	15.44'	480.38	441.38	433.00	39'-0"	22	466.50	30
50	W18X119	54+47.46	15.44'	480.63	441.63	433.00	39'-0"	22	466.58	30

PILE SCHEDULE 2

Pile Number	Pile Type	Station	Offset	Top of Pile Elevation	Pile Tip Elevation	Estimated Top of Rock Elevation	Estimated Pile Length	Number of Studs per Pile	Top of Encasement Elevation	Encasement Diameter (Inches)
51	W18X119	54+53.13	15.44'	480.78	441.78	432.00	39'-0"	22	466.65	30
52	W18X119	54+58.80	15.44'	480.85	441.85	432.00	39'-0"	22	466.72	30
53	W18X119	54+64.48	15.44'	480.92	441.92	432.00	39'-0"	22	466.78	30
54	W18X119	54+70.15	15.44'	480.98	441.98	432.00	39'-0"	22	466.85	30
55	W18X119	54+75.83	15.44'	481.05	442.05	432.00	39'-0"	22	466.92	30
56	W18X119	54+81.50	15.44'	481.12	442.12	432.00	39'-0"	22	466.98	30
57	W18X119	54+87.17	15.44'	481.19	442.19	432.00	39'-0"	22	467.03	30
58	W18X119	54+92.85	15.44'	481.25	442.25	432.00	39'-0"	22	467.08	30
59	W18X119	54+98.52	15.44'	481.32	442.32	432.00	39'-0"	22	467.14	30
60	W18X119	55+04.19	15.44'	481.39	442.39	432.00	39'-0"	22	467.19	30
61	W18X211	55+09.87	15.44'	481.45	434.45	432.00	47'-0"	22	467.24	30
62	W18X211	55+15.54	15.44'	481.52	434.52	432.00	47'-0"	22	467.28	30
63	W18X211	55+21.22	15.44'	481.58	434.58	432.00	47'-0"	22	467.32	30
64	W18X211	55+26.89	15.44'	481.65	434.65	432.00	47'-0"	22	467.36	30
65	W18X211	55+32.56	15.44'	481.72	434.72	432.00	47'-0"	22	467.41	30
66	W18X211	55+38.24	15.44'	481.92	434.92	432.00	47'-0"	22	467.44	30
67	W18X211	55+44.86	15.44'	482.33	435.33	432.00	47'-0"	24	467.48	30
68	W18X211	55+51.47	15.44'	482.73	435.73	432.00	47'-0"	24	467.52	30
69	W18X211	55+58.08	15.44'	483.14	436.14	432.00	47'-0"	24	467.55	30
70	W18X211	55+63.92	15.44'	483.47	436.47	432.00	47'-0"	24	467.58	30
71	W18X211	55+68.88	15.44'	483.75	436.75	432.00	47'-0"	24	467.60	30
72	W18X211	55+73.88	15.44'	484.02	437.02	432.00	47'-0"	26	467.62	30
73	W18X211	55+79.41	15.44'	484.32	437.32	432.00	47'-0"	26	467.64	30
74	W18X211	55+85.08	15.44'	484.64	437.64	432.00	47'-0"	26	467.67	30
75	W18X211	55+90.34	16.49'	484.92	437.92	432.00	47'-0"	26	467.70	30
76	W18X211	55+96.80	18.87'	485.26	438.26	432.00	47'-0"	26	467.75	30
77	W18X211	56+03.56	20.93'	485.62	438.62	432.00	47'-0"	28	467.81	30
78	W18X211	56+10.57	22.68'	485.54	438.54	432.00	47'-0"	26	467.85	30
79	W18X211	56+17.82	24.07'	485.06	438.06	432.00	47'-0"	26	467.90	30
80	W18X211	56+25.25	25.11'	484.59	437.59	432.00	47'-0"	26	467.93	30
81	W18X211	56+33.31	25.81'	484.09	437.09	432.00	47'-0"	24	467.96	30
82	W18X211	56+41.52	26.08'	483.58	436.58	432.00	47'-0"	24	467.98	30
83	W18X211	56+48.90	26.25'	483.12	436.12	432.00	47'-0"	24	468.00	30
84	W18X211	56+56.49	26.52'	482.65	435.65	432.00	47'-0"	22	468.02	30
85	W18X211	56+64.10	26.60'	482.36	435.36	432.00	47'-0"	22	468.04	30
86	W18X211	56+71.71	26.47'	482.29	435.29	432.00	47'-0"	22	468.05	30
87	W18X211	56+79.29	26.14'	482.22	435.22	432.00	47'-0"	22	468.06	30
88	W18X211	56+86.82	25.62'	482.15	435.15	432.00	47'-0"	22	468.06	30
89	W18X211	56+94.27	24.91'	482.08	435.08	432.00	47'-0"	22	468.05	30
90	W18X211	57+01.63	24.01'	482.01	435.01	432.00	47'-0"	22	468.05	30
91	W18X211	57+08.87	22.93'	481.94	434.94	432.00	47'-0"	22	468.04	30
92	W18X211	57+15.99	21.67'	481.88	434.88	432.00	47'-0"	22	468.03	30
93	W18X211	57+23.24	20.22'	481.77	434.77	432.00	47'-0"	22	468.02	30
94	W18X211	57+29.67	18.57'	481.65	434.65	432.00	47'-0"	22	468.00	30
95	W18X211	57+36.16	17.12'	481.66	434.66	432.00	47'-0"	22	467.99	30
96	W18X211	57+42.70	15.89'	481.70	434.70	432.00	47'-0"	22	467.98	30
97	W18X211	57+48.25	15.44'	481.91	434.91	432.00	47'-0"	22	467.98	30
98	W18X211	57+54.25	15.44'	482.30	435.30	432.00	47'-0"	22	467.99	30
99	W18X211	57+60.25	15.44'	482.69	435.69	432.00	47'-0"	22	468.00	30
100	W18X211	57+66.25	15.44'	483.09	436.09	432.00	47'-0"	24	468.01	30

PILE SCHEDULE 3

Pile Number	Pile Type	Station	Offset	Top of Pile Elevation	Pile Tip Elevation	Estimated Top of Rock Elevation	Estimated Pile Length	Number of Studs per Pile	Top of Encasement Elevation	Encasement Diameter (Inches)
101	W18X211	57+72.25	15.44'	483.48	436.48	432.00	47'-0"	24	468.02	30
102	W18X211	57+78.25	15.44'	483.88	436.88	432.00	47'-0"	24	468.04	30
103	W18X211	57+84.25	15.44'	484.27	437.27	432.00	47'-0"	24	468.06	30
104	W18X211	57+90.25	15.44'	484.66	437.66	432.00	47'-0"	26	468.07	30
105	W18X211	57+96.25	15.44'	485.05	438.05	432.00	47'-0"	26	468.09	30
106	W18X211	58+02.25	15.44'	485.44	438.44	444.00	47'-0"	26	468.11	30
107	W18X211	58+08.25	15.44'	485.47	438.47	444.00	47'-0"	26	468.14	30
108	W18X211	58+14.25	15.44'	485.13	438.13	444.00	47'-0"	26	468.18	30
109	W18X211	58+20.25	15.44'	484.80	437.80	444.00	47'-0"	26	468.21	30
110	W18X211	58+26.25	15.44'	484.46	437.46	444.00	47'-0"	24	468.25	30
111	W18X211	58+32.25	15.44'	484.12	437.12	444.00	47'-0"	24	468.28	30
112	W18X211	58+38.25	15.44'	483.79	436.79	444.00	47'-0"	24	468.33	30
113	W18X211	58+44.25	15.44'	483.45	436.45	444.00	47'-0"	24	468.38	30
114	W18X211	58+50.25	15.44'	483.11	436.11	444.00	47'-0"	22	468.43	30
115	W18X211	58+56.25	15.44'	482.78	435.78	444.00	47'-0"	22	468.48	30
116	W18X211	58+62.25	15.44'	482.44	435.44	444.00	47'-0"	22	468.54	30
117	W18X211	58+68.25	15.44'	482.32	435.32	444.00	47'-0"	22	468.60	30
118	W18X211	58+74.25	15.44'	482.42	435.42	444.00	47'-0"	22	468.67	30
119	W18X211	58+80.25	15.44'	482.53	435.53	444.00	47'-0"	22	468.74	30
120	W18X211	58+86.25	15.44'	482.63	435.63	444.00	47'-0"	22	468.81	30
121	W18X211	58+92.25	15.44'	482.73	435.73	444.00	47'-0"	22	468.88	30
122	W18X211	58+98.25	15.44'	482.84	435.84	444.00	47'-0"	22	468.95	30
123	W18X211	59+04.32	15.44'	482.94	435.94	444.00	47'-0"	22	469.03	30
124	W18X211	59+10.39	15.44'	483.04	436.04	444.00	47'-0"	22	469.12	30
125	W18X211	59+16.46	15.44'	483.15	436.15	444.00	47'-0"	22	469.20	30
126	W18X211	59+22.27	15.66'	483.25	436.25	444.00	47'-0"	22	469.29	30
127	W18X211	59+28.37	16.11'	483.35	436.35	444.00	47'-0"	22	469.39	30
128	W18X211	59+34.70	16.45'	483.45	436.45	444.00	47'-0"	22	469.50	30
129	W18X211	59+41.05	16.67'	483.56	436.56	444.00	47'-0"	22	469.61	30
130	W18X211	59+47.40	16.76'	483.67	436.67	444.00	47'-0"	22	469.72	30
131	W18X211	59+53.76	16.72'	483.77	436.77	444.00	47'-0"	22	469.83	30
132	W18X211	59+60.72	16.54'	483.89	436.89	444.00	47'-0"	22	469.96	30
133	W18X211	59+67.67	16.20'	484.00	437.00	444.00	47'-0"	22	470.08	30
134	W18X211	59+74.60	15.71'	484.11	437.11	444.00	47'-0"	22	470.21	30
135	W18X211	59+80.64	15.44'	484.21	437.21	444.00	47'-0"	22	470.32	30
136	W18X211	59+86.47	15.44'	484.31	437.31	444.00	47'-0"	22	470.45	30
137	W18X211	59+92.29	15.44'	484.50	437.50	444.00	47'-0"	22	470.57	30
138	W18X211	59+98.11	15.44'	485.05	438.05	444.00	47'-0"	22	470.69	30
139	W18X211	60+04.38	15.44'	485.64	438.64	444.00	47'-0"	24	470.83	30
140	W18X211	60+10.20	15.44'	486.19	439.19	444.00	47'-0"	24	470.97	30
141	W18X211	60+16.06	15.44'	486.75	439.75	444.00	47'-0"	24	471.11	30
142	W18X211	60+21.81	15.44'	487.29	440.29	444.00	47'-0"	24	471.24	30
143	W18X211	60+27.86	15.44'	487.57	440.57	444.00	47'-0"	24	471.39	30
144	W18X211	60+33.63	15.44'	487.53	440.53	444.00	47'-0"	24	471.53	30
145	W18X211	60+39.40	15.44'	487.49	440.49	444.00	47'-0"	24	471.67	30
146	W18X211	60+45.17	15.44'	487.45	440.45	444.00	47'-0"	24	471.81	30
147	W18X211	60+51.02	15.44'	487.41	440.41	444.00	47'-0"	24	471.96	30
148	W18X211	60+56.81	15.44'	487.38	440.38	444.00	47'-0"	24	472.10	30
149	W18X211	60+62.60	15.44'	487.34	440.34	444.00	47'-0"	24	472.24	30
150	W18X211	60+68.38	15.44'	487.30	440.30	444.00	47'-0"	24	472.38	30

PILE SCHEDULE 4

Pile Number	Pile Type	Station	Offset	Top of Pile Elevation	Pile Tip Elevation	Estimated Top of Rock Elevation	Estimated Pile Length	Number of Studs per Pile	Top of Encasement Elevation	Encasement Diameter (Inches)
151	W18X211	60+74.66	15.44'	487.26	440.26	444.00	47'-0"	22	472.53	30
152	W18X211	60+84.80	15.44'	487.21	440.21	444.00	47'-0"	22	472.78	30
153	W18X211	60+91.55	15.44'	487.23	440.23	444.00	47'-0"	22	472.95	30
154	W18X211	60+97.33	15.44'	487.24	440.24	444.00	47'-0"	22	473.09	30
155	W18X211	61+03.12	15.44'	487.26	440.26	444.00	47'-0"	22	473.23	30
156	W18X211	61+08.91	15.44'	487.28	440.28	444.00	47'-0"	22	473.37	30
157	W18X119	61+14.70	15.44'	487.30	448.30	444.00	39'-0"	22	473.51	30
158	W18X119	61+20.48	15.44'	487.32	448.32	444.00	39'-0"	22	473.65	30
159	W18X119	61+26.27	15.44'	487.33	448.33	444.00	39'-0"	22	473.80	30
160	W18X119	61+32.06	15.44'	487.35	448.35	444.00	39'-0"	22	473.94	30
161	W18X119	61+37.85	15.44'	487.37	448.37	444.00	39'-0"	22	474.08	30
162	W18X119	61+43.64	15.44'	487.39	448.39	444.00	39'-0"	20	474.22	30
163	W18X119	61+49.43	15.44'	487.41	448.41	444.00	39'-0"	20	474.36	30
164	W18X119	61+55.22	15.44'	487.42	448.42	444.00	39'-0"	20	474.50	30
165	W18X119	61+61.01	15.44'	487.44	448.44	444.00	39'-0"	20	474.65	30
166	W18X119	61+66.81	15.44'	487.46	448.46	444.00	39'-0"	20	474.79	30
167	W18X119	61+72.59	15.44'	487.48	448.48	444.00	39'-0"	20	474.93	30
168	W18X119	61+78.37	15.44'	487.50	448.50	444.00	39'-0"	20	475.07	30
169	W18X119	61+84.16	15.44'	487.51	448.51	444.00	39'-0"	20	475.21	30
170	W18X119	61+89.95	15.44'	487.53	448.53	444.00	39'-0"	20	475.35	30
171	W18X119	61+95.74	15.44'	487.55	448.55	444.00	39'-0"	20	475.50	30
172	W18X119	62+01.53	15.44'	487.57	448.57	444.00	39'-0"	20	475.64	30
173	W18X119	62+06.60	15.44'	487.58	448.58	444.00	39'-0"	20	475.76	30
174	W18X119	62+11.67	15.44'	487.60	448.60	444.00	39'-0"	18	475.89	30
175	W18X211	62+17.90	15.44'	487.62	451.62	444.00	36'-0"	18	476.04	30
176	W18X211	62+30.80	15.44'	487.66	451.66	444.00	36'-0"	18	476.35	30
177	W18X119	62+37.13	15.44'	487.68	448.68	444.00	39'-0"	18	476.51	30
178	W18X119	62+42.34	15.44'	487.70	448.70	444.00	39'-0"	18	476.64	30
179	W18X119	62+47.54	15.44'	487.71	448.71	444.00	39'-0"	18	476.76	30
180	W18X119	62+52.75	15.44'	487.73	448.73	444.00	39'-0"	18	476.89	30
181	W18X119	62+58.75	15.44'	487.76	448.76	444.00	39'-0"	18	477.04	30
182	W18X119	62+64.75	15.44'	487.80	448.80	444.00	39'-0"	18	477.18	30
183	W18X119	62+70.75	15.44'	487.84	448.84	444.00	39'-0"	18	477.33	30
184	W18X119	62+76.75	15.44'	487.89	448.89	444.00	39'-0"	18	477.48	30
185	W18X119	62+82.75	15.44'	487.93	448.93	444.00	39'-0"	18	477.62	30
186	W18X119	62+88.75	15.44'	487.97	448.97	444.00	39'-0"	16	477.77	30
187	W18X119	62+94.75	15.44'	488.02	449.02	444.00	39'-0"	16	477.92	30
188	W18X119	63+00.75	15.44'	488.06	449.06	444.00	39'-0"	16	478.06	30
189	W18X119	63+06.75	15.44'	488.11	449.11	444.00	39'-0"	16	478.21	30
190	W18X119	63+12.75	15.44'	488.15	449.15	444.00	39'-0"	16	478.36	30
191	W18X119	63+18.75	15.44'	488.19	449.19	444.00	39'-0"	16	478.51	30
192	W18X119	63+24.75	15.44'	488.24	449.24	444.00	39'-0"	16	478.65	30
193	W18X119	63+30.75	15.44'	488.28	449.28	444.00	39'-0"	16	478.80	30
194	W18X119	63+36.75	15.44'	488.32	449.32	444.00	39'-0"	16	478.95	30
195	W18X119	63+42.75	15.44'	488.37	449.37	444.00	39'-0"	16	479.09	30
196	W18X76	63+48.75	15.44'	488.41	463.41	444.00	25'-0"	16	479.24	30
197	W18X76	63+54.75	15.44'	488.45	463.45	444.00	25'-0"	16	479.39	30
198	W18X76	63+60.75	15.44'	488.50	463.50	444.00	25'-0"	16	479.53	30
199	W18X76	63+66.75	15.44'	488.54	463.54	444.00	25'-0"	16	479.68	30
200	W18X76	63+72.75	15.44'	488.58	463.58	444.00	25'-0"	16	479.83	30

PILE SCHEDULE 5

Pile Number	Pile Type	Station	Offset	Top of Pile Elevation	Pile Tip Elevation	Estimated Top of Rock Elevation	Estimated Pile Length	Number of Studs per Pile	Top of Encasement Elevation	Encasement Diameter (Inches)
201	W18X76	63+78.75	15.44'	488.62	463.62	444.00	25'-0"	16	479.97	30
202	W18X76	63+84.98	15.44'	488.66	463.66	444.00	25'-0"	14	480.13	30
203	W18X76	63+91.21	15.44'	488.69	463.69	444.00	25'-0"	14	480.28	30
204	W18X76	63+97.44	15.44'	488.72	463.72	444.00	25'-0"	14	480.43	30
205	W18X76	64+03.67	15.44'	488.75	463.75	444.00	25'-0"	14	480.58	30
206	W18X76	64+09.67	15.44'	488.78	463.78	444.00	25'-0"	14	480.73	30
207	W18X76	64+15.67	15.44'	488.81	463.81	444.00	25'-0"	14	480.88	30
208	W18X76	64+21.67	15.44'	488.84	463.84	444.00	25'-0"	14	481.02	30
209	W18X76	64+27.67	15.44'	488.87	463.87	444.00	25'-0"	14	481.17	30
210	W18X76	64+33.67	15.44'	488.90	463.90	444.00	25'-0"	14	481.32	30
211	W18X76	64+39.67	15.44'	488.93	463.93	444.00	25'-0"	14	481.46	30
212	W18X76	64+45.67	15.44'	488.96	463.96	444.00	25'-0"	14	481.61	30
213	W18X76	64+51.67	15.44'	488.99	463.99	444.00	25'-0"	12	481.76	30
214	W18X76	64+57.67	15.44'	489.02	464.02	444.00	25'-0"	12	481.90	30
215	W18X76	64+63.67	15.44'	489.05	464.05	444.00	25'-0"	12	482.05	30
216	W18X76	64+69.67	15.44'	489.08	464.08	444.00	25'-0"	12	482.20	30
217	W18X76	64+75.67	15.44'	489.11	464.11	444.00	25'-0"	12	482.34	30
218	W18X76	64+81.67	15.44'	489.14	464.14	444.00	25'-0"	12	482.49	30
219	W18X76	64+87.67	15.44'	489.17	464.17	444.00	25'-0"	12	482.64	30
220	W18X76	64+93.67	15.44'	489.20	464.20	444.00	25'-0"	12	482.79	30
221	W18X76	64+99.67	15.44'	489.23	464.23	444.00	25'-0"	12	482.93	30
222	W18X76	65+05.67	15.44'	489.26	464.26	444.00	25'-0"	12	483.08	30
223	W18X76	65+11.67	15.44'	489.29	464.29	444.00	25'-0"	12	483.23	30
224	W18X76	65+17.67	15.44'	489.32	464.32	444.00	25'-0"	12	483.37	30
225	W18X76	65+23.67	15.44'	489.35	464.35	444.00	25'-0"	12	483.52	30
226	W18X76	65+29.67	15.44'	489.38	464.38	444.00	25'-0"	10	483.67	30
227	W18X76	65+35.67	15.44'	489.41	464.41	444.00	25'-0"	10	483.81	30
228	W18X76	65+41.67	15.44'	489.44	464.44	444.00	25'-0"	10	483.96	30
229	W18X76	65+47.67	15.44'	489.47	464.47	444.00	25'-0"	10	484.11	30
230	W18X76	65+53.67	15.44'	489.50	464.50	444.00	25'-0"	10	484.25	30
231	W18X76	65+59.67	15.44'	489.53	464.53	444.00	25'-0"	10	484.40	30
232	W18X76	65+65.67	15.44'	489.56	464.56	444.00	25'-0"	10	484.54	30
233	W18X76	65+71.67	15.44'	489.59	464.59	444.00	25'-0"	10	484.69	30
234	W18X76	65+77.67	15.44'	489.62	464.62	444.00	25'-0"	10	484.84	30
235	W18X76	65+83.67	15.44'	489.65	464.65	444.00	25'-0"	10	484.98	30
236	W18X76	65+89.67	15.44'	489.68	464.68	444.00	25'-0"	10	485.13	30
237	W18X76	65+95.67	15.44'	489.71	464.71	444.00	25'-0"	10	485.28	30
238	W18X76	66+01.67	15.44'	489.74	464.74	444.00	25'-0"	10	485.42	30
239	W18X76	66+07.67	15.44'	489.77	464.77	444.00	25'-0"	8	485.57	30
240	W18X76	66+13.67	15.44'	489.80	464.80	444.00	25'-0"	8	485.71	30
241	W18X76	66+19.67	15.44'	489.83	464.83	444.00	25'-0"	8	485.85	30
242	W18X76	66+25.67	15.44'	489.86	464.86	444.00	25'-0"	8	485.99	30
243	W18X76	66+31.67	15.44'	489.89	464.89	444.00	25'-0"	8	486.12	30
244	W18X76	66+37.67	15.44'	489.92	464.92	444.00	25'-0"	8	486.26	30
245	W18X76	66+43.67	15.44'	489.95	464.95	444.00	25'-0"	8	486.39	30
246	W18X76	66+49.56	15.44'	489.98	464.98	444.00	25'-0"	8	486.52	30
247	W18X76	66+55.45	15.44'	490.01	465.01	444.00	25'-0"	8	486.65	30
248	W18X76	66+61.34	15.44'	490.04	465.04	444.00	25'-0"	8	486.77	30

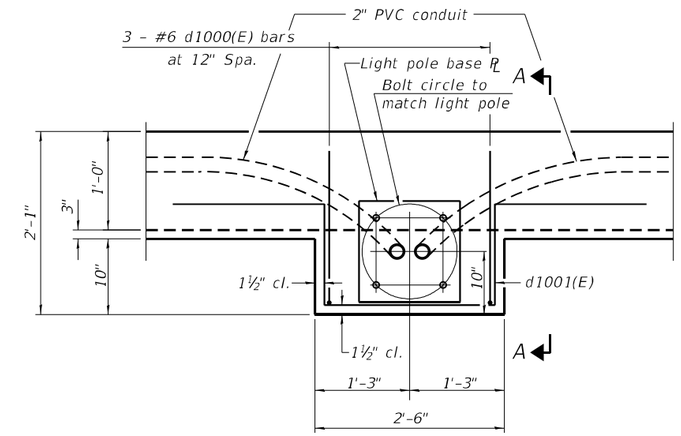

LIGHT POLE PLAN

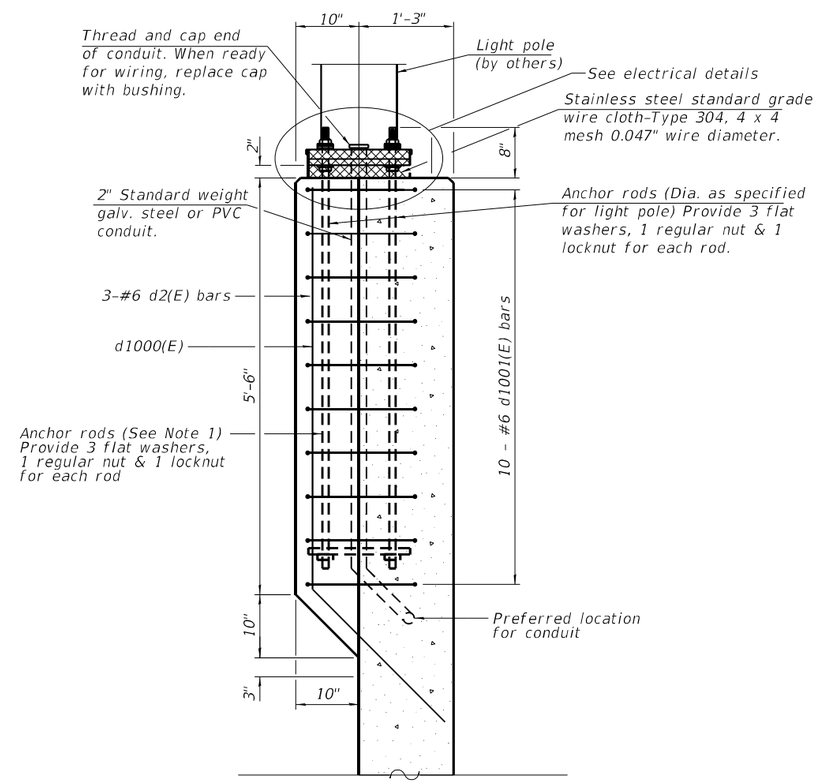

SECTION A-A

NOTES

1. For anchor rod, grouding, and ring plate details, see Std. 836001-04.
2. Cost of anchor rods and conduit is included with Concrete Structures.

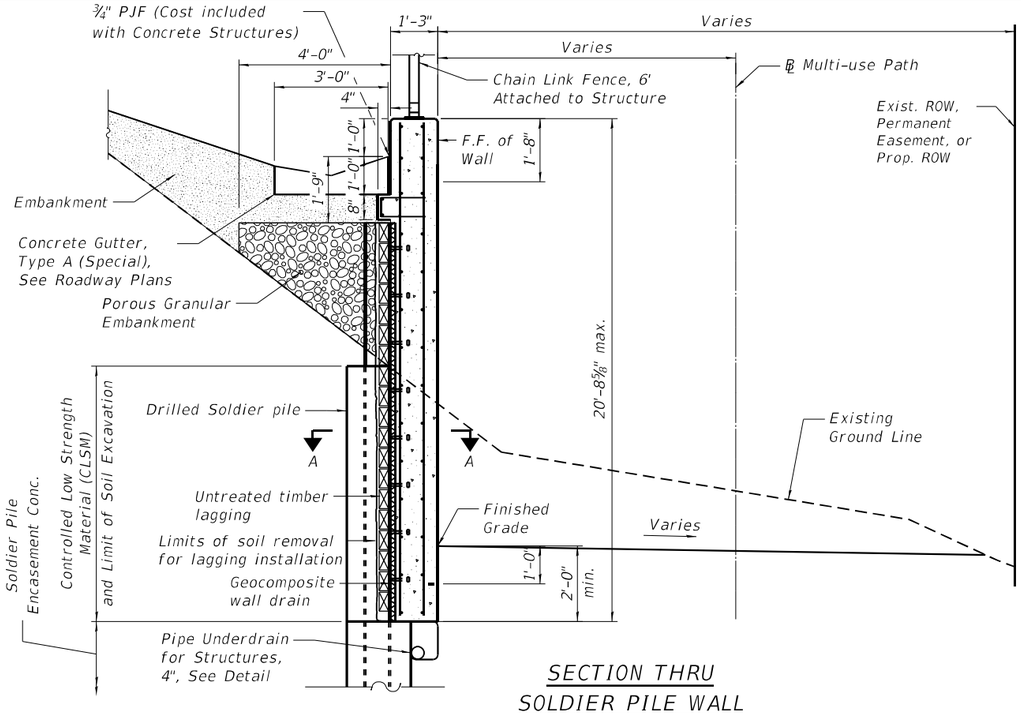

SECTION THRU
SOLDIER PILE WALL

Sta. 51+54.43 to Sta. 56+67.59, Sta. 57+15.20 to Sta. 57+45.25,
Sta. 58+05.25 to Sta. 59+02.34, Sta. 59+66.00 to Sta. 66+64.32

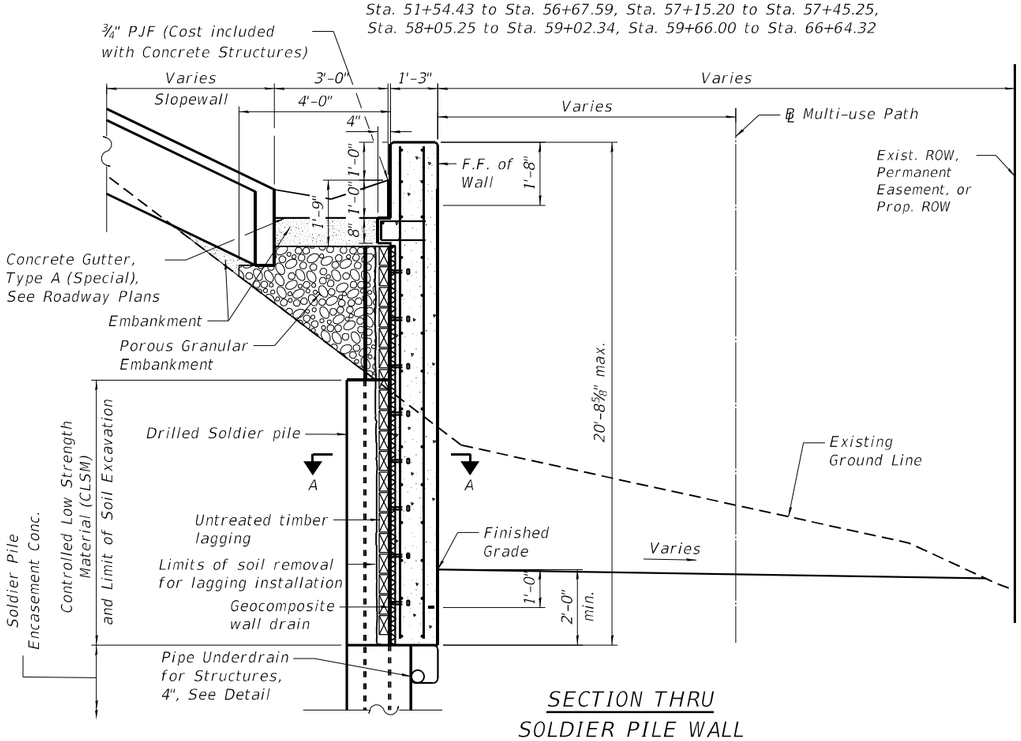

SECTION THRU
SOLDIER PILE WALL

Sta. 56+67.59 to Sta. 57+15.20, Sta. 57+45.25 to Sta. 58+05.25, Sta. 59+02.34 to Sta. 59+66.00

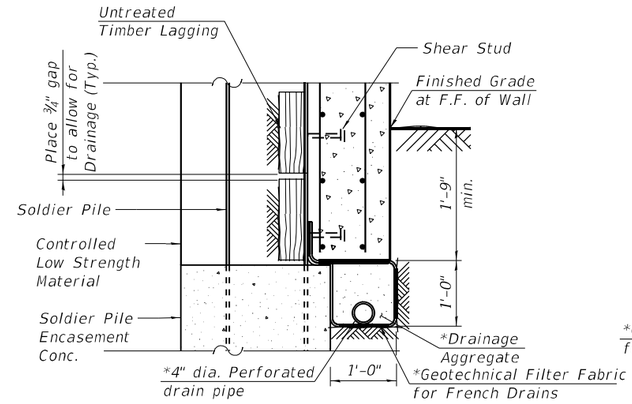

PIPE UNDERDRAIN DETAIL
AT SOLDIER PILE

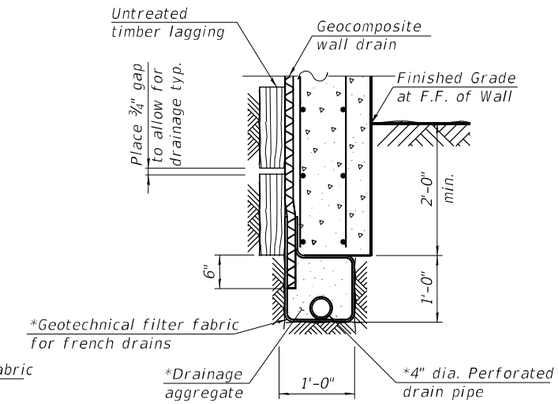

PIPE UNDERDRAIN DETAIL
BETWEEN SOLDIER PILES

*Included in the cost of
Pipe Underdrains for Structures, 4"

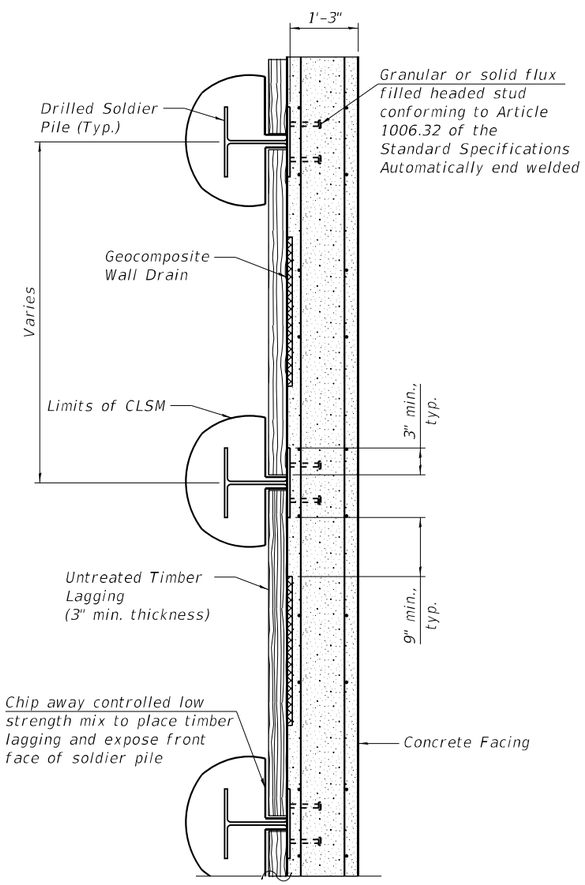

SECTION A-A

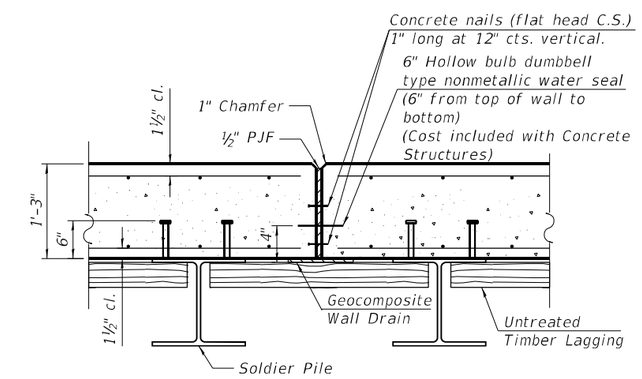

EXPANSION JOINT DETAILS

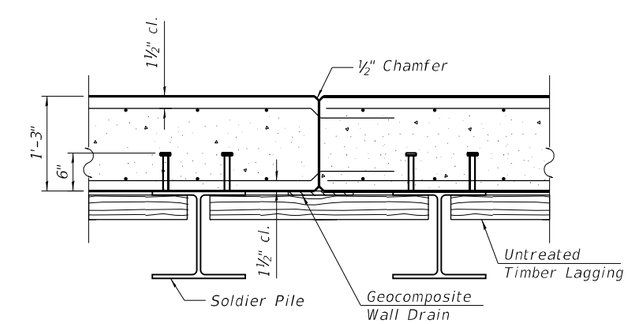

CONSTRUCTION JOINT DETAILS

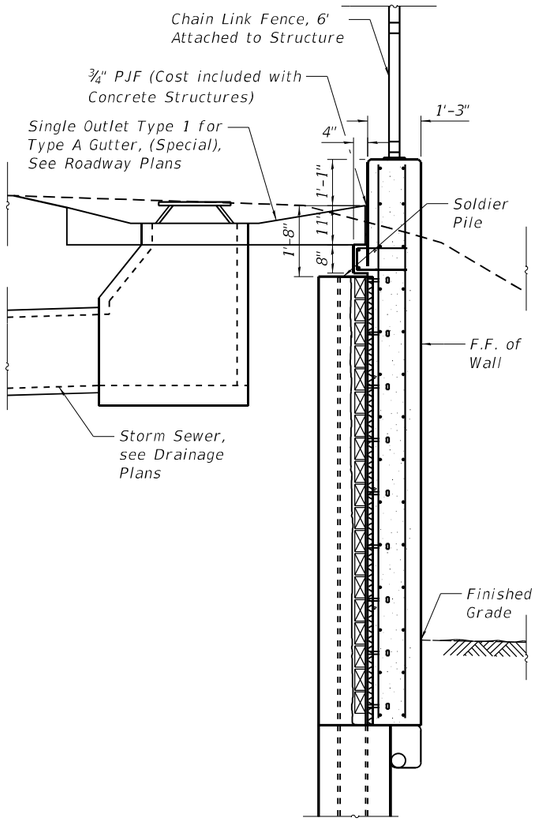

SECTION THRU SOLDIER PILE WALL

at Typical Drainage Inlet

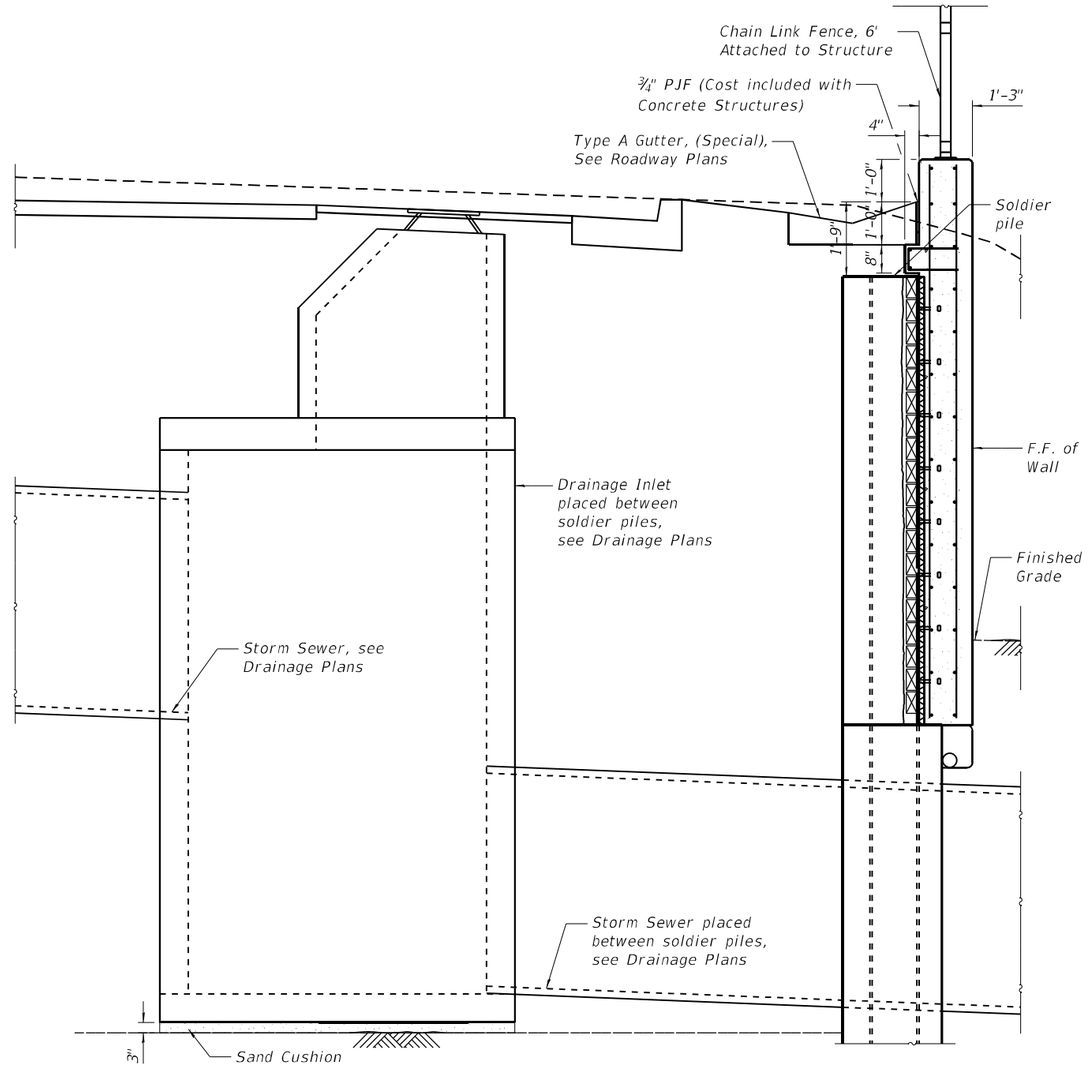

SECTION THRU SOLDIER PILE WALL

at Drainage Inlet (Sta. 62+24.63)

SUGGESTED SEQUENCE OF CONSTRUCTION AT DRAINAGE INLET (Sta 62+24.63)

1. Drill holes for soldier piles.
2. Set soldier pile.
3. Place soldier pile encasement concrete and controlled low-strength material (CLSM), as shown on plans.
4. Install timber lagging and excavate in front of wall.
5. Install trench protection and excavate behind wall for storm sewer installation. Cost of trench excavation and protection included with Storm Sewers, Class A, Type 2 60" per Standard Specification 550.04.
6. Install storm sewers and drainage inlet. See Drainage Plans.
7. Install geocomposite wall drain.
8. Install stud shear connectors.
9. Provide trench backfill in front of wall. Trench backfill measured with Storm Sewers, Class A, Type 2 60". See Drainage Plans.
10. Provide trench backfill behind wall. See Drainage Plans.
11. Construct concrete facing.

Michael Baker INTERNATIONAL
200 W Adams Street
Suite 1800
Chicago, IL 60606
P:+1 312.707.8770
FAX: 312.707.8804

USER NAME = DLamb	DESIGNED - YC	REVISED -	
	CHECKED - MLK	REVISED -	
PLOT SCALE = 63.9997 ' / in.	DRAWN - EML	REVISED -	
PLOT DATE = 6/6/2023	CHECKED - JMK	REVISED -	

STATE OF ILLINOIS
DEPARTMENT OF TRANSPORTATION

CROSS SECTIONS AND DETAILS 2
STRUCTURE NO. 090-8517

SHEET S3-22 OF S3-38 SHEETS

F.A.P. RTE.	SECTION	COUNTY	TOTAL SHEETS	SHEET NO.
669	13 (HVB, HB-3) BR	TAZEWELL	1173	789
		CONTRACT NO. 68C55		
	ILLINOIS	FED. AID PROJECT		

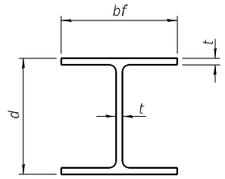

STEEL PILE TABLE

Designation	Depth d	Flange width bf	Web and Flange thickness t	Encasement diameter A
W 18x211	20⅝"	11½"	1 1/16"	30"
W 18x119	19"	11¼"	⅝"	30"
W 18x76	18¼"	11"	7/16"	30"

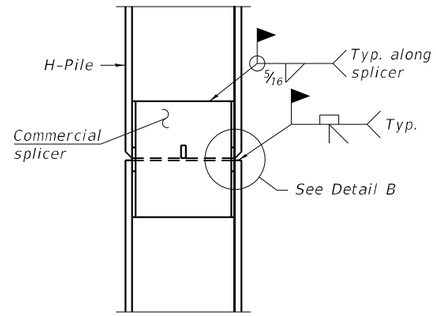

ELEVATION

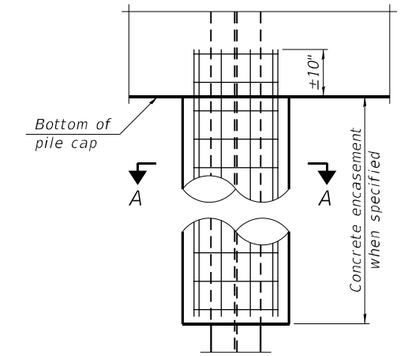

ELEVATION

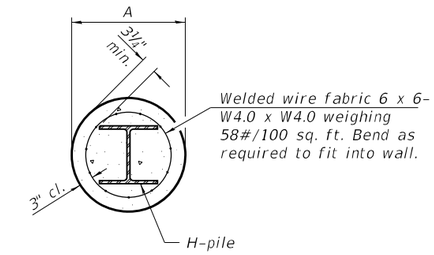

SECTION A-A

INDIVIDUAL PILE CONCRETE ENCASEMENT

(Forms for encasement may be omitted when soil conditions permit).

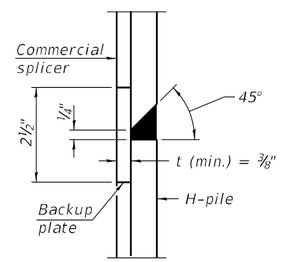

DETAIL "B"

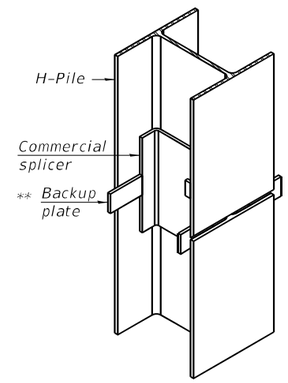

ISOMETRIC VIEW

WELDED COMMERCIAL SPLICE

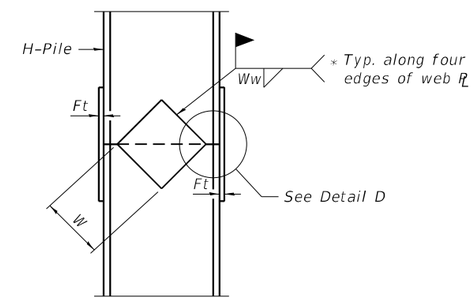

ELEVATION

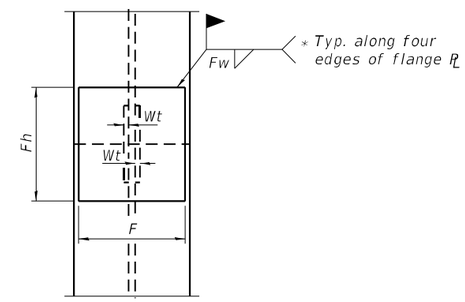

END VIEW

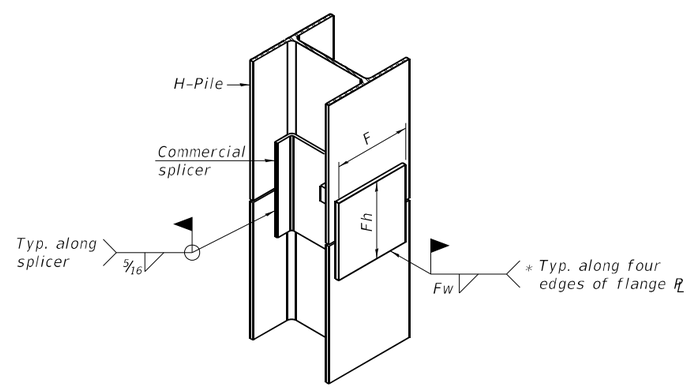

ISOMETRIC VIEW

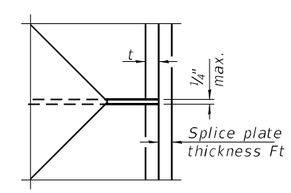

DETAIL D

Designation	F	Fh	Ft	Fw	W	Wt	Ww
W 18x211	9"	36"	2½"	1"	10"	⅞"	¾"
W 18x119	9½"	18"	1½"	⅞"	9"	⅝"	½"
W 18x76	9½"	12"	1"	¾"	8"	⅝"	½"

WELDED PLATE FIELD SPLICE

NOTES:

1. The steel soldier piles shall be according to AASHTO M270 Grade 50.
2. Cost of furnishing and erecting splice plates shall be included with Furnishing Soldier Piles.

WELDED COMMERCIAL SPLICE ALTERNATE

* Interrupt welds ¼" from end of web and/or each flange.

** Remove portions of backup plates that extend outside the flanges.

*** Weld size per pile shoe manufacturer (5/16" min.).

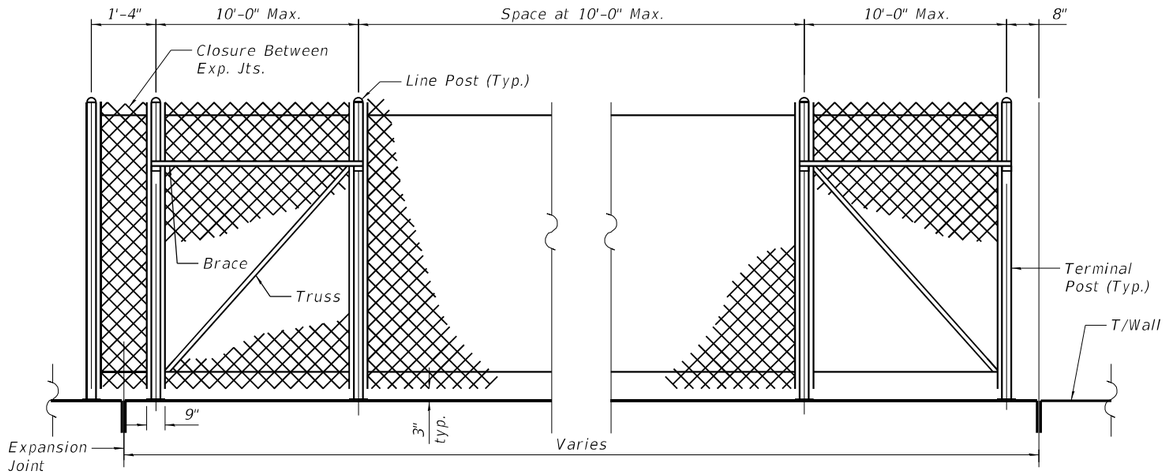

TYPICAL CHAIN LINK FENCE BETWEEN EXPANSION JOINTS

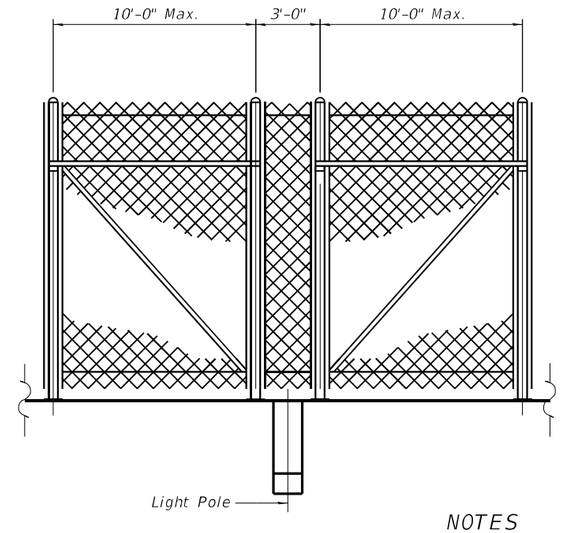

TYPICAL CHAIN LINK FENCE BETWEEN LIGHT POLES

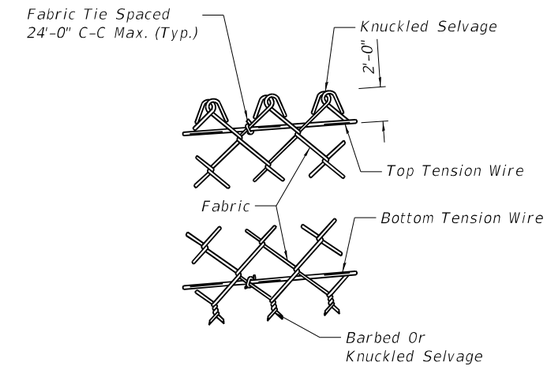

METHOD OF TYING FABRIC TO TENSION WIRES

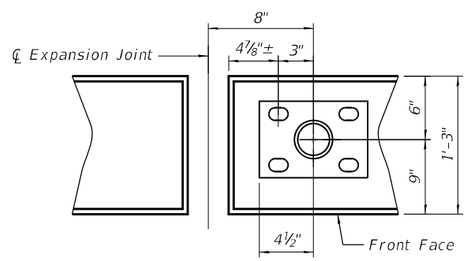

ANCHOR PLATE PLAN AT EXPANSION JOINT

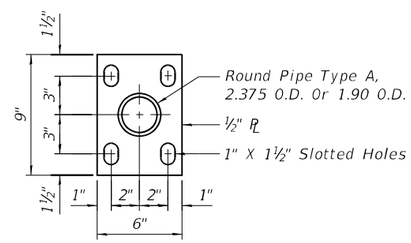

SECTION C-C

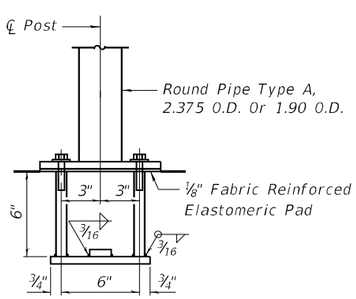

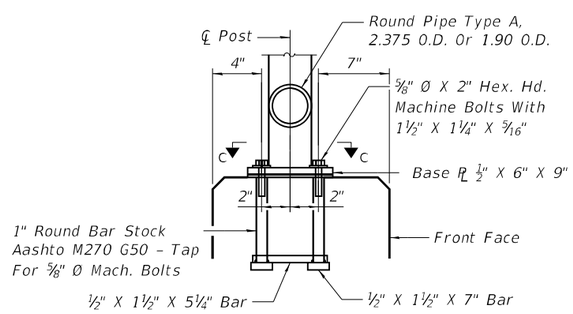

ANCHOR BOLT DETAILS

In lieu of the cast-in-place anchor device shown, the contractor has the option of drilling and setting ⅝" ø anchor rods according to article 509.06 of the standard specifications. embedment shall be according to the manufacturer's specifications. place reinforcement bars to miss anchor rod locations.

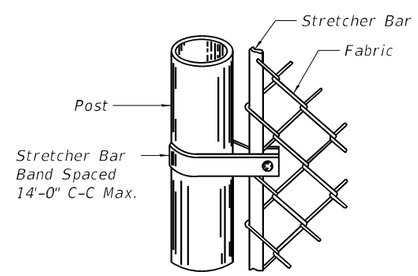

METHOD OF FASTENING STRETCHER BAR TO POST

SECTION PROPERTIES

Component	Section	lbs./ft.
Line Post	Pipe Type A 1.90 O.D.	2.72
Terminal Post	Pipe Type A 2.375 O.D.	3.65
Horizontal Braces	Pipe Type A 1.66 O.D.	2.27
	Pipe Type B 1.66 O.D.	1.83

NOTES

1. Posts, chain link fence, and attaching hardware shall be according to section 1006 of the standard specifications, except as noted, and shall be paid for at the contract unit price per meter for chain link fence (attached to structure).
2. The 9 gauge (3.759 mm) fabric ties shall be according to article 1006.27(d) of the standard specifications.
3. Installation of the chain link fabric shall be according to section 664 of the standard specifications.
4. Stretcher bars shall be used at all end posts.
5. Posts shall be according to aashto m 281, grades a or b. all other steel shapes and plates shall conform to the requirements of aashto m 270m grade 250.
6. The chain link fabric shall be placed along the side of the posts facing the railroad.
7. If the option of drilling and epoxy grouting the anchor rods is chosen, the contractor shall use the capsule or the adhesive cartridge type anchor rods that have been previously tested and given prior approval by the department. The contractor shall install these anchor rods in pre-drilled holes according to the manufacturer's recommendations and procedures. the capsule or the adhesive cartridge shall be sealed with premeasured amounts of the adhesive chemical.
8. Space reinforcement to miss anchor rods.
9. All posts, railings, splices, anchor devices, and bent plates shall be galvanized according to article 509.05 of the standard specifications.
10. Vent holes for galvanizing shall be placed in the posts and rails at locations that will not allow the accumulation of moisture in the members.
11. The chain link fabric shall conform to the requirements of article 1006.27(a)(1)a, b or c of the standard specifications.

BILL OF MATERIAL

ITEM	UNIT	QUANTITY
Chain Link Fence, 6' Attached to Structure	Foot	1,350

Page 1 of 2

Wang Engineering

wangeng@wangeng.com

Telephone:
Fax:

BORING LOG BSB-13

WEI Job No.: 707-21-01

Client: Michael Baker International
Project: Cedar Street Extension at IL Route 29
Location: Tazewell County, IL

Datum: NAVD 88
Elevation: 492.89 ft
North: 1456404.92 ft
East: 2458205.83 ft
Station: 81+81.49
Offset: 43.69 LT

Elevation (ft)	SOIL AND ROCK DESCRIPTION	Depth (ft)	Sample Type / recovery	Sample No.	SPT Values (blw/6 in)	Qu (tsf)	Moisture Content (%)
492.6	4-inch thick, black SILTY CLAY LOAM --TOPSOIL--						
	Medium dense to dense, brown, medium SAND to SANDY LOAM, trace gravel; moist --FILL-- --RDR 2--			1	5 8 12	NP	6
		5		2	6 13 18	NP	8
				3	5 8 11	NP	13
484.9	Medium dense, brown GRAVELLY SAND; moist --FILL-- --RDR 2--	10		4	10 14 13	NP	9
481.4	Stiff to hard, gray SILTY CLAY LOAM to CLAY LOAM, trace to little gravel --FILL-- --RDR 2--	15		5	10 8 10	>4.50 P	11
				6	5 9 18	3.61 B	12
		20		7	6 8 12	3.20 B	15
				8	7 8 8	1.89 B	15

Elevation (ft)	SOIL AND ROCK DESCRIPTION	Depth (ft)	Sample Type / recovery	Sample No.	SPT Values (blw/6 in)	Qu (tsf)	Moisture Content (%)
				9	7 6 11	2.05 B	16
		25		10	6 7 16	3.61 B	12
467.4	Very dense, black GRAVELLY SAND; damp to moist --FILL-- --RDR 2-- --possible cobbles--			11	11 35 46	NP	22
464.9	Medium dense, brown, medium SAND; wet --FILL-- --RDR 2--	30		12	12 12 8	NP	20
461.1	Stiff, dark gray SILTY CLAY LOAM, trace organic matter --RDR 2--	35		13	3 4 5	1.56 B	23
456.1	Soft, brown GRAVELLY CLAY LOAM; wet --RDR 3--						
	--possible cobbles--	40		14	3 3 5	0.33 B	16

WANGENGINC 707210 GPJ WANGENG.GDT 4/29/22

GENERAL NOTES

Begin Drilling: 05-21-2019 Complete Drilling: 05-22-2019
Drilling Contractor: Wang Testing Services Drill Rig: 18D25A [85%]
Driller: N&K&N Logger: F. Bozga Checked by: C. Marin
Drilling Method: 2.25" HSA to 15 ft, mud rotary thereafter, boring backfilled upon completion

WATER LEVEL DATA

While Drilling: 28.00 ft
At Completion of Drilling: 5 ft mud
Time After Drilling: 24 hours
Depth to Water: 28.00 ft

The stratification lines represent the approximate boundary between soil types; the actual transition may be gradual.

Page 2 of 2

Wang Engineering

wangeng@wangeng.com

Telephone:
Fax:

BORING LOG BSB-13

WEI Job No.: 707-21-01

Client: Michael Baker International
Project: Cedar Street Extension at IL Route 29
Location: Tazewell County, IL

Datum: NAVD 88
Elevation: 492.89 ft
North: 1456404.92 ft
East: 2458205.83 ft
Station: 81+81.49
Offset: 43.69 LT

Elevation (ft)	SOIL AND ROCK DESCRIPTION	Depth (ft)	Sample Type / recovery	Sample No.	SPT Values (blw/6 in)	Qu (tsf)	Moisture Content (%)
451.1	Medium dense to very dense, brown GRAVELLY SANDY LOAM; wet to saturated --RDR 2 to 4--	45		15	7 8 11	NP	13
	--possible cobbles--						
	--%Gravel=39.0-- --%Sand=46.9-- --%Silt=13.4-- --%Clay=0.7-- --A-1-b (0)--	50		16	9 14 15	NP	9
	--possible cobbles--						
		55		17	30 50/5"	NP	10
436.1	Soft, gray SILTY CLAY --highly weathered shale-- --RDR 1--	60		18	5 3 5	0.33 B	29

Elevation (ft)	SOIL AND ROCK DESCRIPTION	Depth (ft)	Sample Type / recovery	Sample No.	SPT Values (blw/6 in)	Qu (tsf)	Moisture Content (%)
431.4	--hard drilling, 61.5 feet-- Very dense, greenish gray SHALE --RDR 4--			19	50/5"	NP	11
	--MSPT 1--	65		20	50/10"		16
	--MSPT 2--			21	100/8.5"		15
	--MSPT 3--	70		22	100/6.5"		19
	--MSPT 4--			23	100/7"		16
	--MSPT 5--	75		24	100/3.5"		14
418.7	--MSPT 6-- Boring terminated at 76.25 ft			25	100/2.5"		20
		80					

WANGENGINC 707210 GPJ WANGENG.GDT 4/29/22

GENERAL NOTES

Begin Drilling: 05-21-2019 Complete Drilling: 05-22-2019
Drilling Contractor: Wang Testing Services Drill Rig: 18D25A [85%]
Driller: N&K&N Logger: F. Bozga Checked by: C. Marin
Drilling Method: 2.25" HSA to 15 ft, mud rotary thereafter, boring backfilled upon completion

WATER LEVEL DATA

While Drilling: 28.00 ft
At Completion of Drilling: 5 ft mud
Time After Drilling: 24 hours
Depth to Water: 28.00 ft

The stratification lines represent the approximate boundary between soil types; the actual transition may be gradual.

Page 1 of 2

Wang Engineering

wangeng@wangeng.com

Telephone:
Fax:

BORING LOG BSB-14

WEI Job No.: 707-21-01

Client: Michael Baker International
Project: Cedar Street Extension at IL Route 29
Location: Tazewell County, IL

Datum: NAVD 88
Elevation: 492.29 ft
North: 1456331.51 ft
East: 2458133.21 ft
Station: 81+85.09
Offset: 59.51 RT

Elevation (ft)	SOIL AND ROCK DESCRIPTION	Depth (ft)	Sample Type / recovery	Sample No.	SPT Values (blw/6 in)	Qu (tsf)	Moisture Content (%)
491.9	5-inch thick, brown TOPSOIL --TOPSOIL--						
491.3	Gray SILTY CLAY LOAM to SILTY CLAY, trace gravel --FILL--			1	11 11 20	NP	7
	Medium dense to dense, brown SAND, trace to little gravel; damp to wet --FILL-- --RDR 2--	5		2	5 13 16	NP	7
				3	7 14 15	NP	10
453.5	Stiff to hard, brown and gray SILTY CLAY LOAM to CLAY LOAM trace to little gravel; damp to moist --FILL-- --RDR 2--	10		4	5 14 12	1.31 B	11
				5	3 5 7	3.20 B	13
		15		6	5 5 6	2.21 B	13
	--2-inch thick silt lens--			7	5 7 8	4.10 B	15
	--possible cobbles--	20		8	4 6 8	3.69 B	12

Elevation (ft)	SOIL AND ROCK DESCRIPTION	Depth (ft)	Sample Type / recovery	Sample No.	SPT Values (blw/6 in)	Qu (tsf)	Moisture Content (%)
				9	4 8 6	4.84 B	11
		25		10	7 8 11	2.38 B	12
466.8	Stiff, gray LOAM to SILTY CLAY LOAM, trace gravel; damp --FILL-- --RDR 2--			11	12 8 7	1.56 S	16
464.3	Stiff to very stiff, black, brown and gray SILTY CLAY to SILTY CLAY LOAM, trace gravel; damp to moist --RDR 2--	30		12	3 4 4	1.23 B	23
	--sandy clay lenses; wet--	35		13	4 4 6	2.13 B	23
455.5	Medium dense, brown GRAVELLY SAND to SANDY LOAM; saturated --RDR 2--						
		40		14	6 4 7	NP	10

WANGENGINC 707210 GPJ WANGENG.GDT 4/29/22

GENERAL NOTES

Begin Drilling: 06-05-2019 Complete Drilling: 06-05-2019
Drilling Contractor: Wang Testing Services Drill Rig: 17D50A [87%]
Driller: K&K Logger: E. Yim Checked by: C. Marin
Drilling Method: 3.25" HSA; boring backfilled upon completion

WATER LEVEL DATA

While Drilling: 36.25 ft
At Completion of Drilling: 24ft augers flushed
Time After Drilling: NA
Depth to Water: NA

The stratification lines represent the approximate boundary between soil types; the actual transition may be gradual.

MODEL: Default
FILE NAME: pw:\\mb-us-pw.bentley.com:mb-us-pw-03\Documents\Chicago IL\01 Projects\179740 IDOT Cedar\SiteX Phll\5.0 CADD\CAD Sheets\Retaining Wall Sheets\0908517-68C55-Wall4-024.dgn

INFRASTRUCTURE ENGINEERING | INCORPORATED

USER NAME = DLamb	DESIGNED -	REVISED -	
	CHECKED -	REVISED -	
PLOT SCALE = 0.1667 ' / in.	DRAWN -	REVISED -	
PLOT DATE = 6/6/2023	CHECKED -	REVISED -	

STATE OF ILLINOIS
DEPARTMENT OF TRANSPORTATION

SOIL BORINGS 1
STRUCTURE NO. 090–8517

SHEET S3-25 OF S3-38 SHEETS

F.A.P. RTE.	SECTION	COUNTY	TOTAL SHEETS	SHEET NO.
VAR.	13 (HVB, HB-3) 8R-1:R	TAZEWELL	1173	792
		CONTRACT NO. 68C55		
	ILLINOIS	FED. AID PROJECT		

BORING LOG BSB-14

Wang Engineering
wangeng@wangeng.com
Telephone:
Fax:

WEI Job No.: 707-21-01
Client: Michael Baker International
Project: Cedar Street Extension at IL Route 29
Location: Tazewell County, IL

Datum: NAVD 88
Elevation: 492.29 ft
North: 1456331.51 ft
East: 2458133.21 ft
Station: 81+85.09
Offset: 59.51 RT

Depth (ft)	Sample Type / recovery	Sample No.	SPT Values (blw/6 in)	Qu (tsf)	Moisture Content (%)
45		15	9 12 14	NP	12
50		16	7 9 10	NP	12
55		17	6 8 5	0.50 P	19
60		18	39 50/4"	NP	14

Profile | Elevation (ft) | SOIL AND ROCK DESCRIPTION

438.3 Medium stiff, bluish gray CLAY and silt laminations; wet
--WEATHERED BEDROCK--
--RDR 2--

433.8 --heaving sand, 58.5 feet--

432.3 Very dense, bluish gray, weathered SHALE
--RDR 2--

Profile | Elevation (ft) | SOIL AND ROCK DESCRIPTION

Extremely weak, bluish gray, fair to excellent rock mass quality, SHALE; closely spaced, completely weathered, horizontal and oblique joints, with no opening, slicken walls.
--Run 1: 60.0 to 65.0 feet--
--Recovery = 100%--
--RQD = 93%--

--Run 2: 65.0 to 70.0 feet--
--Recovery = 90%--
--RQD = 75%--

--Q_u at 67.5 feet=459 psi--

--Run 3: 70.0 to 75.0 feet--
--Recovery = 95%--
--RQD = 53%--

417.3 Boring terminated at 75.00 ft

Depth (ft)	Sample Type / recovery	Sample No.	SPT Values (blw/6 in)	Qu (tsf)	Moisture Content (%)
19	CORE				
20	CORE				
21	CORE				

GENERAL NOTES

Begin Drilling: 06-05-2019 Complete Drilling: 06-05-2019
Drilling Contractor: Wang Testing Services Drill Rig: 17D50A [87%]
Driller: K&K Logger: E. Yim Checked by: C. Marin
Drilling Method: 3.25" HSA; boring backfilled upon completion

WATER LEVEL DATA

While Drilling: 36.25 ft
At Completion of Drilling: 24ft augers flushed
Time After Drilling: NA
Depth to Water: NA
The stratification lines represent the approximate boundary between soil types; the actual transition may be gradual.

WANGENGINC 707101.GPJ WANGENG.GDT 4/29/22

BORING LOG RWB-01

Wang Engineering
wangeng@wangeng.com
Telephone:
Fax:

WEI Job No.: 707-21-01
Client: Michael Baker International
Project: Cedar Street Extension at IL Route 29
Location: Tazewell County, IL

Datum: NAVD 88
Elevation: 466.77 ft
North: 1456568.06 ft
East: 2458719.50 ft
Station: 412+47.85
Offset: 29.0997 LT

Profile | Elevation (ft) | SOIL AND ROCK DESCRIPTION

466.4 5-inch thick, black SILTY CLAY LOAM
--TOPSOIL--
Loose, black GRAVELLY LOAM; damp
--FILL--
--RDR 2--

463.8 Medium stiff to stiff, brown CLAY LOAM, little gravel; damp
--FILL--
--RDR 2--

460.5 --Qu: 0.75 P--
Very loose to loose, brown GRAVEL to SANDY GRAVEL; wet to saturated
--RDR 1--

456.3 Soft, gray SILTY CLAY LOAM, trace organic matter
--RDR 1--
--cave in at 11 feet--

453.8 Loose, gray GRAVELLY SAND; saturated

452.8 Medium stiff, black SILTY CLAY LOAM, trace organics
--RDR 1--

451.3 Medium dense, gray GRAVELLY LOAM; wet
--RDR 2--

448.8 Stiff, brown SILTY CLAY LOAM, trace gravel

446.8 Boring terminated at 20.00 ft

Depth (ft)	Sample Type / recovery	Sample No.	SPT Values (blw/6 in)	Qu (tsf)	Moisture Content (%)
5		1	8 2 2	NP	9
5		2	2 1 2	1.00 P	16
5		3	1 1 2	NP	16
10		4	3 3 3	NP	13
10		5	2 2 2	0.33 B	30
15		6	4 3 3	0.50 P	27
15		7	6 6 6	NP	13
20		8	3 3 5	1.89 B	20

GENERAL NOTES

Begin Drilling: 06-12-2019 Complete Drilling: 06-12-2019
Drilling Contractor: Wang Testing Services Drill Rig: 17B57T [91%]
Driller: N&A Logger: F. Bozga Checked by: C. Marin
Drilling Method: 3.25" HSA; boringbackfilled upon completion

WATER LEVEL DATA

While Drilling: 6.50 ft
At Completion of Drilling: 7.50 ft
Time After Drilling: 24 hours
Depth to Water: 7.50 ft
The stratification lines represent the approximate boundary between soil types; the actual transition may be gradual.

WANGENGINC 707210.GPJ WANGENG.GDT 4/29/22

BORING LOG RWB-02

Wang Engineering
wangeng@wangeng.com
Telephone:
Fax:

WEI Job No.: 707-21-01
Client: Michael Baker International
Project: Cedar Street Extension at IL Route 29
Location: Tazewell County, IL

Datum: NAVD 88
Elevation: 466.29 ft
North: 1456541.37 ft
East: 2458651.96 ft
Station: 411+74.42
Offset: 35.053 LT

Profile | Elevation (ft) | SOIL AND ROCK DESCRIPTION

465.7 7-inch thick, black SILTY CLAY LOAM
--TOPSOIL--
Medium dense, dark brown LOAM, trace gravel; damp
--RDR 2--

463.3 Soft, brown CLAY LOAM; moist
--RDR 1--
--2-inch sand seam--

460.8 Medium dense to dense, brown SANDY GRAVEL; wet to saturated
--RDR 2 to 3--

--cave in at 11.5 feet--

--gravelly sand--

446.3 Boring terminated at 20.00 ft

Depth (ft)	Sample Type / recovery	Sample No.	SPT Values (blw/6 in)	Qu (tsf)	Moisture Content (%)
		1	7 5 5	NP	13
5		2	1 1 2	0.33 B	25
		3	4 6 5	NP	13
10		4	5 5 6	NP	14
		5	11 18 13	NP	11
15		6	14 13 13	NP	6
		7	10 16 15	NP	11
20		8	15 9 9	NP	7

GENERAL NOTES

Begin Drilling: 06-11-2019 Complete Drilling: 06-11-2019
Drilling Contractor: Wang Testing Services Drill Rig: 17B57T [91%]
Driller: N&A Logger: F. Bozga Checked by: C. Marin
Drilling Method: 2.25" HSA; boringbackfilled upon completion

WATER LEVEL DATA

While Drilling: 5.50 ft
At Completion of Drilling: 6.00 ft
Time After Drilling: 24 hours
Depth to Water: 5.50 ft
The stratification lines represent the approximate boundary between soil types; the actual transition may be gradual.

WANGENGINC 707210.GPJ WANGENG.GDT 4/29/22

MODEL: Default
FILE NAME: pw:\\mb-us-pw.bentley.com:mb-us-pw-03\Documents\Chicago-IL\01 Projects\179740 IDOT Cedar\SHExt Phills.0 CADD\CAD_Sheets\Retaining Wall Sheets\0908517-68C55-WallB-025.dgn

INFRASTRUCTURE ENGINEERING | INCORPORATED

USER NAME = DLamb	DESIGNED -	REVISED -	
	CHECKED -	REVISED -	
PLOT SCALE = 0.1667 ' / in.	DRAWN -	REVISED -	
PLOT DATE = 6/6/2023	CHECKED -	REVISED -	

STATE OF ILLINOIS
DEPARTMENT OF TRANSPORTATION

SOIL BORINGS 2
STRUCTURE NO. 090-8517

SHEET S3-26 OF S3-38 SHEETS

F.A.P. RTE.	SECTION	COUNTY	TOTAL SHEETS	SHEET NO.
VAR.	13 (HVB, HB-3) BR-1:R	TAZEWELL	1173	793
		CONTRACT NO. 68C55		
		ILLINOIS	FED. AID PROJECT	

Page 1 of 1

Wang Engineering

wangeng@wangeng.com

Telephone:
Fax:

BORING LOG RWB-03

WEI Job No.: 707-21-01

Client: Michael Baker International
Project: Cedar Street Extension at IL Route 29
Location: Tazewell County, IL

Datum: NAVD 88
Elevation: 468.70 ft
North: 1456497.90 ft
East: 2458581.25 ft
Station: 410+91.52
Offset: 25.0073 LT

Elevation (ft)	SOIL AND ROCK DESCRIPTION	Sample No.	SPT Values (blw/6 in)	Qu (tsf)	Moisture Content (%)
468.7	6-inch thick, brown TOPSOIL --TOPSOIL--				
467.5	Stiff, brown SILTY CLAY LOAM, trace gravel; damp --FILL--	1	4 13 12	3.94 S	13
465.7	Medium dense, black SILTY LOAM, trace gravel; damp --FILL-- --RDR 2--				
464.1	Stiff, brown CLAY LOAM, trace gravel; damp to moist --FILL-- --RDR 2--	2	2 3 3	1.72 B	18
	Very stiff, brown SILTY CLAY, trace gravel; moist --RDR 2--	3	2 4 4	2.38 B	22
	--gravel lens; wet--	4	5 15 7	2.30 B	23
458.2	--cave in at 10.5 feet--				
	Medium dense, brown SANDY GRAVEL; saturated --RDR 2--	5	5 8 10	NP	10
455.7	Loose, brown SAND, trace gravel; saturated --3-inch thick, brown silt-- --RDR 2--	6	7 2 2	NP	26
453.2	Brown SILT; saturated				
452.5	Stiff, brown CLAY				
452.4	Medium dense, brown SAND, trace to little gravel; saturated --RDR 2--	7	6 9 7	1.00 P	22
		8	1 5 6	NP	14
	--heaving sand at 26 feet--				
440.7	Medium dense, gray GRAVELLY SAND; saturated --RDR 2--				
438.7	Boring terminated at 30.00 ft				

Depth (ft)	Sample Type	Sample No.	SPT Values (blw/6 in)	Qu (tsf)	Moisture Content (%)
		9	7 9 11	NP	16
25		10	6 9 13	NP	9
		11	7 6 15	NP	12
		12	4 8 10	NP	10

GENERAL NOTES

Begin Drilling: 06-07-2019 Complete Drilling: 06-07-2019
Drilling Contractor: Wang Testing Services Drill Rig: 17D50A [87%]
Driller: K&K&N Logger: E. Yim Checked by: C. Marin
Drilling Method: 3.25" HSA; boring backfilled upon completion

WATER LEVEL DATA

While Drilling: 11.10 ft
At Completion of Drilling: 15.00 ft
Time After Drilling: 24 hours
Depth to Water: 8.00 ft
The stratification lines represent the approximate boundary between soil types; the actual transition may be gradual.

WANGENGINC 707210' GPJ WANGENG.GDT 4/29/22

Page 1 of 1

Wang Engineering

wangeng@wangeng.com

Telephone:
Fax:

BORING LOG RWB-04

WEI Job No.: 707-21-01

Client: Michael Baker International
Project: Cedar Street Extension at IL Route 29
Location: Tazewell County, IL

Datum: NAVD 88
Elevation: 470.20 ft
North: 1456477.06 ft
East: 2458548.84 ft
Station: 410+53.38
Offset: 19.4438 LT

Elevation (ft)	SOIL AND ROCK DESCRIPTION	Sample No.	SPT Values (blw/6 in)	Qu (tsf)	Moisture Content (%)
469.7	6-inch thick, brown TOPSOIL --TOPSOIL--				
468.9	Stiff, brown CLAY LOAM, trace gravel; damp --FILL--	1	3 4 20	1.72 B	9
467.2	Black SILTY LOAM, some gravel; damp --FILL-- --RDR 2--				
466.1	Stiff, brown SILTY CLAY, trace gravel; moist --FILL--	2	7 25 18	NP	13
464.7	Dense, black SILTY LOAM, some gravel; damp --FILL--				
464.1	Medium stiff, brown CLAY LOAM, trace gravel; damp --FILL--	3	2 1 3	0.57 B	25
	Very soft to medium stiff, black, brown and gray SILTY CLAY to SILTY CLAY LOAM, trace gravel; moist to wet --RDR 2--	4	1 2 2	0.90 B	20
		5	3 2 2	0.25 P	22
456.6	Loose to medium dense, brown SILT to SILTY LOAM, trace gravel; saturated --RDR 2-- --sand lens--	6	2 2 4	NP	20
453.5	Medium dense, brown SAND, trace gravel; saturated --RDR 2--	7	2 4 6	NP	22
452.2	Medium dense, brown SILT; saturated --RDR 2--	8	2 5 6	NP	28
449.7	Medium dense, brown SAND, trace gravel; saturated --RDR 2--				
		9	6 6 7	NP	22
		10	2 5 5	NP	28
443.5	Hard, brown CLAY LOAM, trace gravel; damp --RDR 2-- --heaving sand at 28 feet--	11	4 6 11	8.20 B	13
		12	8 15 19	9.10 B	13
438.5	Medium dense, brown SANDY GRAVEL; saturated --RDR 2--				
		13	3 7 10	NP	10
435.2	Boring terminated at 35.00 ft				

Depth (ft)	Sample Type	Sample No.	SPT Values (blw/6 in)	Qu (tsf)	Moisture Content (%)
5					
10					
15					
20					
25					
30					
35					
40					

GENERAL NOTES

Begin Drilling: 06-07-2019 Complete Drilling: 06-07-2019
Drilling Contractor: Wang Testing Services Drill Rig: 17D50A [87%]
Driller: K&K&N Logger: E. Yim Checked by: C. Marin
Drilling Method: 3.25" HSA; boring backfilled upon completion

WATER LEVEL DATA

While Drilling: 13.60 ft
At Completion of Drilling: 19.00 ft
Time After Drilling: NA
Depth to Water: NA
The stratification lines represent the approximate boundary between soil types; the actual transition may be gradual.

WANGENGINC 707210' GPJ WANGENG.GDT 4/29/22

Page 1 of 2

Wang Engineering

wangeng@wangeng.com

Telephone:
Fax:

BORING LOG RWB-05

WEI Job No.: 707-21-01

Client: Michael Baker International
Project: Cedar Street Extension at IL Route 29
Location: Tazewell County, IL

Datum: NAVD 88
Elevation: 467.90 ft
North: 1456470.86 ft
East: 2458499.74 ft
Station: 410+04.49
Offset: 33.6048 LT

Elevation (ft)	SOIL AND ROCK DESCRIPTION	Sample No.	SPT Values (blw/6 in)	Qu (tsf)	Moisture Content (%)
467.4	6-inch thick, black SILTY CLAY LOAM --TOPSOIL--				
	Medium stiff to very stiff, dark brown to brown CLAY LOAM to LOAM, trace gravel; damp to moist --FILL-- --RDR 1 to 2--	1	13 8 8	2.25 P	14
		2	2 2 2	0.75 P	21
462.4	Soft, gray SILTY LOAM; saturated --RDR 1-- --L_L(%)=30, P_L(%)=17-- --%Gravel=1.1-- --%Sand=21.1-- --%Silt=64.6-- --%Clay=13.2-- --A-6 (8)--	3	1 2 1	0.25 B	34
459.9	Very stiff, brown and gray SILTY CLAY; damp --RDR 2--	4	2 3 5	2.30 B	23
457.4	Medium dense, brown SANDY GRAVEL; wet --RDR 2--	5	5 5 6	NP	14
454.9	Medium dense, brown, medium to coarse SAND, trace gravel; saturated --RDR 2--	6	5 5 5	NP	25
452.4	Medium dense, brown SANDY GRAVEL; wet --RDR 2--	7	13 15 13	NP	13
449.9	Medium dense, brown SILTY LOAM; wet --RDR 2--	8	3 5 9	NP	25
447.4	Medium dense, brown, coarse SAND, trace gravel; saturated --RDR 2--				
442.4	Stiff to very stiff, gray SILTY CLAY LOAM, trace gravel --RDR 2--				
436.9	--augur chatter, 31 to 33 feet-- Dense, brown SANDY GRAVEL, trace cobbles; wet --RDR 3--				
433.4	Very dense, greenish gray SHALE --RDR 4-- --MSPT 1-- --MSPT 2--				

Depth (ft)	Sample Type	Sample No.	SPT Values (blw/6 in)	Qu (tsf)	Moisture Content (%)
5					
10					
15					
20					
25					
30					
35					
40					
		9	7 6 7	NP	19
		10	8 6 10	NP	14
		11	4 4 6	2.05 B	16
		12	4 6 9	1.75 P	16
		13	20 15 20	NP	12
		14	00/14"	NP	18
		15	00/11"	NP	16

GENERAL NOTES

Begin Drilling: 06-05-2019 Complete Drilling: 06-06-2019
Drilling Contractor: Wang Testing Services Drill Rig: 18D25A [85%]
Driller: N&A&B Logger: F. Bozga Checked by: C. Marin
Drilling Method: 2.25" HSA to 10 ft, mud rotary thereafter, boring backfilled upon completion

WATER LEVEL DATA

While Drilling: 10.50 ft
At Completion of Drilling: 4 ft mud
Time After Drilling: NA
Depth to Water: NA
The stratification lines represent the approximate boundary between soil types; the actual transition may be gradual.

WANGENGINC 707210' GPJ WANGENG.GDT 4/29/22

MODEL: Default
FILE NAME: pw:\\mb-us-pw.bentley.com:mb-us-pw-03\Documents\Chicago IL\01 Projects\179740 IDOT Cedar Street Phll 5.0 CADD\CAD Sheets\Retaining Wall Sheets\0908517-68C55-WallA-026.dgn

INFRASTRUCTURE ENGINEERING | INCORPORATED

USER NAME = DLamb	DESIGNED -	REVISED -	
	CHECKED -	REVISED -	
PLOT SCALE = 0.1667 ' / in.	DRAWN -	REVISED -	
PLOT DATE = 6/6/2023	CHECKED -	REVISED -	

STATE OF ILLINOIS
DEPARTMENT OF TRANSPORTATION

SOIL BORINGS 3
STRUCTURE NO. 090–8517

SHEET S3-27 OF S3-38 SHEETS

F.A.P. RTE.	SECTION	COUNTY	TOTAL SHEETS	SHEET NO.
VAR.	13 (HVB, HB-3) BR-1;R	TAZEWELL	1173	794

CONTRACT NO. 68C55

ILLINOIS FED. AID PROJECT

Wang Engineering

wangeng@wangeng.com
Telephone:
Fax:

BORING LOG RWB-05

WEI Job No.: 707-21-01

Client: Michael Baker International
Project: Cedar Street Extension at IL Route 29
Location: Tazewell County, IL

Datum: NAVD 88
Elevation: 467.90 ft
North: 1456470.86 ft
East: 2458499.74 ft
Station: 410+04.49
Offset: 33.6048 LT

Elevation (ft)	SOIL AND ROCK DESCRIPTION	Depth (ft)	Sample Type / recovery	Sample No.	SPT Values (blw/6 in)	Qu (tsf)	Moisture Content (%)
	--MSPT 3--			16	100/7"	NP	19
423.9	--MSPT 4--			17	100/6"	NP	17
	Boring terminated at 44.00 ft	45					
		50					
		55					
		60					

GENERAL NOTES

Begin Drilling: 06-05-2019 Complete Drilling: 06-06-2019
Drilling Contractor: Wang Testing Services Drill Rig: 18D25A [85%]
Driller: N&A&B Logger: F. Bozga Checked by: C. Marin
Drilling Method: 2.25" HSA to 10 ft, mud rotary thereafter, boring backfilled upon completion

WATER LEVEL DATA

While Drilling: 10.50 ft
At Completion of Drilling: 4 ft mud
Time After Drilling: NA
Depth to Water: NA

The stratification lines represent the approximate boundary between soil types; the actual transition may be gradual.

WANGENGINC 707101 GPJ WANGENG.GDT 4/29/22

Wang Engineering

wangeng@wangeng.com
Telephone:
Fax:

BORING LOG RWB-05HA

WEI Job No.: 707-21-01

Client: Michael Baker International
Project: Cedar Street Extension at IL Route 29
Location: Tazewell County, IL

Datum: NAVD 88
Elevation: 472.37 ft
North: 1456458.60 ft
East: 2458507.36 ft
Station: 410+07.15
Offset: 19.3928 LT

Elevation (ft)	SOIL AND ROCK DESCRIPTION	Depth (ft)	Sample Type / recovery	Sample No.	SPT Values (blw/6 in)	Qu (tsf)	Moisture Content (%)
471.9	6-inch thick, black SILTY CLAY LOAM --TOPSOIL--			1	PUSH	1.75 P	16
	Stiff to very stiff, brown CLAY LOAM, trace gravel --FILL--			2	PUSH	2.25 P	13
		5		3	PUSH	1.50 P	14
466.4	Boring terminated at 6.00 ft						
		10					
		15					
		20					

GENERAL NOTES

Begin Drilling: 06-20-2019 Complete Drilling: 06-20-2019
Drilling Contractor: Wang Testing Services Drill Rig: GEOPROBE
Driller: N&A Logger: F. Bozga Checked by: C. Marin
Drilling Method: 1" IDA Pneumatic Geoprobe LB Sampler

WATER LEVEL DATA

While Drilling: DRY
At Completion of Drilling: DRY
Time After Drilling: NA
Depth to Water: NA

The stratification lines represent the approximate boundary between soil types; the actual transition may be gradual.

WANGENGINC 707210 GPJ WANGENG.GDT 4/29/22

Wang Engineering

wangeng@wangeng.com
Telephone:
Fax:

BORING LOG RWB-06

WEI Job No.: 707-21-01

Client: Michael Baker International
Project: Cedar Street Extension at IL Route 29
Location: Tazewell County, IL

Datum: NAVD 88
Elevation: 467.55 ft
North: 1456462.29 ft
East: 2458446.30 ft
Station: 409+46.49
Offset: 42.2336 LT

Elevation (ft)	SOIL AND ROCK DESCRIPTION	Depth (ft)	Sample Type / recovery	Sample No.	SPT Values (blw/6 in)	Qu (tsf)	Moisture Content (%)
467.1	6-inch thick, black SILTY CLAY LOAM --TOPSOIL--						
	Medium stiff, dark brown SILTY CLAY LOAM to CLAY LOAM, trace gravel; damp --FILL-- --RDR 1--			1	3 4 4	0.98 B	17
		5		2	3 4 4	0.82 B	21
				3	2 3 4	0.66 B	20
459.6	Stiff, brown and gray SILTY CLAY; wet --RDR 1--			4	3 3 4	1.89 B	23
		10					
457.1	Brown CLAY, trace gravel; moist						
456.3	Soft, brown CLAY LOAM, trace to little gravel; wet --RDR 2--			1	2 2 3	0.25 P	20
454.6	Brown SAND, trace gravel; saturated						
453.9	Soft, brown CLAY LOAM, trace gravel; wet			2	3 6 7	0.25 P	18
		15					
452.1	Brown SILT to SILTY LOAM, few clay lenses; saturated						
451.1	Brown SANDY LOAM; saturated			3	4 4 9	NP	21
450.5	Brown SILT; saturated						
	Brown SAND to SANDY LOAM, trace gravel; saturated						
448.8	Loose to medium dense, gray SILT, clay laminations; saturated			4	7 6 3	NP	21
		20					

Elevation (ft)	SOIL AND ROCK DESCRIPTION	Depth (ft)	Sample Type / recovery	Sample No.	SPT Values (blw/6 in)	Qu (tsf)	Moisture Content (%)
				5	3 7 5	NP	27
		25		6	5 5 4	NP	21
	--sandy gravel lenses--			7	4 6 7	NP	25
440.6	Brown SAND; saturated						
439.0	Medium dense, brown SILT, clay laminations and sand lenses; saturated			8	4 7 8	NP	20
		30					
437.6	Boring terminated at 30.00 ft						
		35					
		40					

GENERAL NOTES

Begin Drilling: 06-13-2019 Complete Drilling: 06-19-2019
Drilling Contractor: Wang Testing Services Drill Rig: 18D25A [85%]
Driller: N&A&B Logger: F. Bozga/E. Yim Checked by: C. Marin
Drilling Method: 2.25" HSA, boring backfilled upon completion

WATER LEVEL DATA

While Drilling: 13.00 ft
At Completion of Drilling: 15.00 ft
Time After Drilling: 24 hours
Depth to Water: 4.00 ft

The stratification lines represent the approximate boundary between soil types; the actual transition may be gradual.

WANGENGINC 707210 GPJ WANGENG.GDT 4/29/22

MODEL: Default
FILE NAME: pw:\\mb-us-pw.bentley.com:mb-us-pw-03\Documents\Chicago IL\01 Projects\179740 IDOT Cedar\SHEAT Phill 5.0 CADD\CAD Sheets\Retaining Wall Sheets\0908517-68C55-Wall4-027.dgn

INFRASTRUCTURE ENGINEERING | INCORPORATED

USER NAME = DLamb	DESIGNED -	REVISED -	
	CHECKED -	REVISED -	
PLOT SCALE = 0.1667 ' / in.	DRAWN -	REVISED -	
PLOT DATE = 6/6/2023	CHECKED -	REVISED -	

STATE OF ILLINOIS
DEPARTMENT OF TRANSPORTATION

SOIL BORINGS 4
STRUCTURE NO. 090–8517

SHEET S3-28 OF S3-38 SHEETS

F.A.P. RTE.	SECTION	COUNTY	TOTAL SHEETS	SHEET NO.
VAR.	13 (HVB, HB-3) BR-1:R	TAZEWELL	1173	795
		CONTRACT NO. 68C55		
	ILLINOIS	FED. AID PROJECT		

Page 1 of 1

BORING LOG RWB-06HA

Wang Engineering
wangeng@wangeng.com
Telephone:
Fax:

WEI Job No.: 707-21-01
Client: Michael Baker International
Project: Cedar Street Extension at IL Route 29
Location: Tazewell County, IL

Datum: NAVD 88
Elevation: 481.91 ft
North: 1456433.32 ft
East: 2458447.17 ft
Station: 409+39.72
Offset: 13.9673 LT

Depth (ft)	SOIL AND ROCK DESCRIPTION	Sample No.	SPT Values (blw/6 in)	Qu (tsf)	Moisture Content (%)
	481.8 / 481.6: 2-inch thick, gray SILTY CLAY, trace gravel; wet --TOPSOIL--				
	Soft, gray SILTY CLAY; wet --FILL--	1	PUSH	0.25 P	14
	Soft to very stiff, brown and gray CLAY LOAM, trace gravel; wet --FILL--	2	PUSH	1.50 P	13
5		3	PUSH	2.00 P	13
	474.9	4	PUSH	0.50 P	14
	--sampler refusal-- Boring terminated at 7.00 ft				
10					
15					
20					

Profile | Elevation (ft) | SOIL AND ROCK DESCRIPTION | Depth (ft) | Sample Type | Recovery | Sample No. | SPT Values (blw/6 in) | Qu (tsf) | Moisture Content (%)

GENERAL NOTES

Begin Drilling: 06-19-2019 Complete Drilling: 06-19-2019
Drilling Contractor: Wang Testing Services Drill Rig: GEOPROBE
Driller: KS&KG Logger: E. Yim Checked by: C. Marin
Drilling Method: 1" IDA Pneumatic Geoprobe LB Sampler

WATER LEVEL DATA

While Drilling: DRY
At Completion of Drilling: DRY
Time After Drilling: NA
Depth to Water: NA
The stratification lines represent the approximate boundary between soil types; the actual transition may be gradual.

WANGENGINC 707101 GPJ WANGENG.GDT 4/29/22

Page 1 of 2

BORING LOG RWB-07

Wang Engineering
wangeng@wangeng.com
Telephone:
Fax:

WEI Job No.: 707-21-01
Client: Michael Baker International
Project: Cedar Street Extension at IL Route 29
Location: Tazewell County, IL

Datum: NAVD 88
Elevation: 485.57 ft
North: 1456421.57 ft
East: 2458399.21 ft
Station: 408+89.02
Offset: 11.6172 LT

Depth (ft)	SOIL AND ROCK DESCRIPTION	Sample No.	SPT Values (blw/6 in)	Qu (tsf)	Moisture Content (%)
	15-inch thick ASPHALT PAVEMENT				
	484.3 Stiff to hard, brown and gray CLAY LOAM to SILTY CLAY LOAM, trace to little gravel; damp --FILL-- --RDR 2-- --2-inch thick sand seams--	1	3 2 3	1.00 P	11
5		2	3 6 7	2.21 B	15
		3	4 5 7	3.20 B	11
10		4	4 6 7	3.05 B	12
		5	4 4 6	3.44 B	14
15		6	3 6 8	5.00 B	11
		7	5 5 8	3.44 B	12
	467.6 Medium dense, brown and black SANDY GRAVEL; damp --RDR 2--	8	8 7 5	NP	12
20					

Profile | Elevation (ft) | SOIL AND ROCK DESCRIPTION | Depth (ft) | Sample Type | Recovery | Sample No. | SPT Values (blw/6 in) | Qu (tsf) | Moisture Content (%)

Depth (ft)	SOIL AND ROCK DESCRIPTION	Sample No.	SPT Values (blw/6 in)	Qu (tsf)	Moisture Content (%)
	465.1 Medium stiff, brown CLAY LOAM --RDR 1--	9	2 1 2	0.57 B	19
	462.6 Stiff, brown and gray SILTY CLAY to SILTY CLAY LOAM, trace gravel; damp --RDR 2--	10	3 4 6	1.89 B	24
25					
	458.5 Medium dense, brown GRAVELLY SAND; wet --RDR 2--	11	4 5 5	1.72 B	20
30		12	6 9 9	NP	21
	453.8 Medium dense, brown, fine SAND; saturated --RDR 2--				
35		13	6 8 8	NP	27
	448.8 Medium dense, brown, coarse SAND; saturated --RDR 2--				
40		14	7 6 6	NP	19

Profile | Elevation (ft) | SOIL AND ROCK DESCRIPTION | Depth (ft) | Sample Type | Recovery | Sample No. | SPT Values (blw/6 in) | Qu (tsf) | Moisture Content (%)

GENERAL NOTES

Begin Drilling: 06-14-2019 Complete Drilling: 06-14-2019
Drilling Contractor: Wang Testing Services Drill Rig: 17B57T [91%]
Driller: N&A&B Logger: F. Bozga Checked by: C. Marin
Drilling Method: 3.25" HSA; boringbackfilled upon completion

WATER LEVEL DATA

While Drilling: 27.00 ft
At Completion of Drilling: 27.00 ft
Time After Drilling: NA
Depth to Water: NA
The stratification lines represent the approximate boundary between soil types; the actual transition may be gradual.

WANGENGINC 707210 GPJ WANGENG.GDT 4/29/22

Page 2 of 2

BORING LOG RWB-07

Wang Engineering
wangeng@wangeng.com
Telephone:
Fax:

WEI Job No.: 707-21-01
Client: Michael Baker International
Project: Cedar Street Extension at IL Route 29
Location: Tazewell County, IL

Datum: NAVD 88
Elevation: 485.57 ft
North: 1456421.57 ft
East: 2458399.21 ft
Station: 408+89.02
Offset: 11.6172 LT

Depth (ft)	SOIL AND ROCK DESCRIPTION	Sample No.	SPT Values (blw/6 in)	Qu (tsf)	Moisture Content (%)
	443.8				
	Very stiff, gray SILTY CLAY LOAM, trace gravel	15	5 7 10	2.46 B	13
	440.6 Boring terminated at 45.00 ft				
50					
55					
60					

Profile | Elevation (ft) | SOIL AND ROCK DESCRIPTION | Depth (ft) | Sample Type | Recovery | Sample No. | SPT Values (blw/6 in) | Qu (tsf) | Moisture Content (%)

GENERAL NOTES

Begin Drilling: 06-14-2019 Complete Drilling: 06-14-2019
Drilling Contractor: Wang Testing Services Drill Rig: 17B57T [91%]
Driller: N&A&B Logger: F. Bozga Checked by: C. Marin
Drilling Method: 3.25" HSA; boringbackfilled upon completion

WATER LEVEL DATA

While Drilling: 27.00 ft
At Completion of Drilling: 27.00 ft
Time After Drilling: NA
Depth to Water: NA
The stratification lines represent the approximate boundary between soil types; the actual transition may be gradual.

WANGENGINC 707210 GPJ WANGENG.GDT 4/29/22

BORING LOG RWB-08

Wang Engineering
wangeng@wangeng.com
Telephone:
Fax:

WEI Job No.: 707-21-01
Client: Michael Baker International
Project: Cedar Street Extension at IL Route 29
Location: Tazewell County, IL

Datum: NAVD 88
Elevation: 488.44 ft
North: 1456419.62 ft
East: 2458343.61 ft
Station: 408+30.89
Offset: 11.9494 LT

Elevation (ft)	SOIL AND ROCK DESCRIPTION	Depth (ft)	Sample Type / recovery	Sample No.	SPT Values (blw/6 in)	Qu (tsf)	Moisture Content (%)
488.1	14-inch thick ASPHALT PAVEMENT						
	Hard, brown and gray CLAY LOAM, trace gravel; damp --FILL--			1	6 5 6	4.18 B	11
485.4	Gray LOAM, little gravel; damp --FILL--						
484.8	Stiff to very stiff, brown and gray CLAY LOAM, trace gravel; damp --FILL-- --RDR 2-- --silt lenses--	5		2	3 4 4	2.87 B	13
				3	4 6 6	2.30 S	12
	--sand lenses-- --sand lenses--	10		4	5 9 12	2.30 B	11
				5	2 4 4	1.15 B	14
475.4	Brown SAND, trace to little gravel; wet --FILL-- --RDR 2--			6	4 3 3	2.25 P	15
474.1	Very stiff, brown and gray SILTY CLAY LOAM, trace gravel; damp --FILL-- --RDR 2--	15		7	5 5 6	3.77 B	18
470.4	Very stiff, brown and gray CLAY LOAM, trace gravel; moist --FILL-- --RDR 2--	20		8	6 5 5	2.21 S	12
467.0	Black, gravelly SILTY LOAM, gas odor; wet --FILL--			9	6 7 5	1.50 P	20
466.3	Medium stiff to stiff, brown and brown and gray SILTY CLAY LOAM, trace gravel; moist	25		10	3 2 2	0.57 B	23
				11	2 3 3	0.90 B	17
460.4	Very stiff, brown CLAY to SILTY CLAY, trace to little gravel; moist --RDR 2--	30		12	5 7 6	2.30 B	22
456.7	Brown SANDY GRAVEL; saturated --RDR 2 to 3--			13	5 5 6	NP	23
454.1	Medium dense, brown SILT, trace gravel; saturated --RDR 2--	35					
451.7	Brown SANDY LOAM to SAND, trace to some gravel; saturated			14	6 6 6	NP	21
448.9	Loose to medium dense, brown	40					

GENERAL NOTES

Begin Drilling: 06-14-2019 Complete Drilling: 06-14-2019
Drilling Contractor: Wang Testing Services Drill Rig: 17D50A [87%]
Driller: KS&KG&NM Logger: E. Yim Checked by: C. Marin
Drilling Method: 3.25" HSA; boring backfilled upon completion

WATER LEVEL DATA

While Drilling: 31.75 ft
At Completion of Drilling: 41.50 ft
Time After Drilling: NA
Depth to Water: NA

The stratification lines represent the approximate boundary between soil types; the actual transition may be gradual.

WANGENGINC 707210 GPJ WANGENG.GDT 4/29/22

BORING LOG RWB-08

Wang Engineering
wangeng@wangeng.com
Telephone:
Fax:

WEI Job No.: 707-21-01
Client: Michael Baker International
Project: Cedar Street Extension at IL Route 29
Location: Tazewell County, IL

Datum: NAVD 88
Elevation: 488.44 ft
North: 1456419.62 ft
East: 2458343.61 ft
Station: 408+30.89
Offset: 11.9494 LT

Elevation (ft)	SOIL AND ROCK DESCRIPTION	Depth (ft)	Sample Type / recovery	Sample No.	SPT Values (blw/6 in)	Qu (tsf)	Moisture Content (%)
	to gray SILT to SILTY LOAM, trace gravel; saturated --RDR 2--						
		45		15	4 3 4	NP	21
	--sand and clay lenses--	50		16	4 7 8	NP	20
438.4	Boring terminated at 50.00 ft						
		55					
		60					

GENERAL NOTES

Begin Drilling: 06-14-2019 Complete Drilling: 06-14-2019
Drilling Contractor: Wang Testing Services Drill Rig: 17D50A [87%]
Driller: KS&KG&NM Logger: E. Yim Checked by: C. Marin
Drilling Method: 3.25" HSA; boring backfilled upon completion

WATER LEVEL DATA

While Drilling: 31.75 ft
At Completion of Drilling: 41.50 ft
Time After Drilling: NA
Depth to Water: NA

The stratification lines represent the approximate boundary between soil types; the actual transition may be gradual.

WANGENGINC 707210 GPJ WANGENG.GDT 4/29/22

BORING LOG RWB-09

Wang Engineering
wangeng@wangeng.com
Telephone:
Fax:

WEI Job No.: 707-21-01
Client: Michael Baker International
Project: Cedar Street Extension at IL Route 29
Location: Tazewell County, IL

Datum: NAVD 88
Elevation: 466.75 ft
North: 1456485.67 ft
East: 2458287.32 ft
Station: 407+51.01
Offset: 65.677 LT

Elevation (ft)	SOIL AND ROCK DESCRIPTION	Depth (ft)	Sample Type / recovery	Sample No.	SPT Values (blw/6 in)	Qu (tsf)	Moisture Content (%)
466.2	7-inch thick, black TOPSOIL --TOPSOIL--						
	Stiff, brown and black CLAY LOAM to LOAM, trace gravel and debris; damp --FILL-- --RDR 2--			1	5 5 5	1.07 B	18
463.8	Black SILTY LOAM, trace gravel; damp --FILL--						
463.0	Medium stiff to stiff, brown to gray SILTY CLAY LOAM, trace to little gravel; damp --FILL-- --RDR 2--	5		2	3 4 4	1.00 P	17
				3	4 3 3	NR	17
458.0	--gray-- Loose, black GRAVEL; saturated --FILL--	10		4	2 3 3	0.57 B	20
456.3	Medium stiff, gray and brown SILTY CLAY LOAM, trace gravel; damp --RDR 2--			5	2 2 3	0.98 B	35
453.8	Very soft to soft, brown and gray CLAY LOAM, trace to little gravel; moist to wet --RDR 2--	15		6	2 4 4	0.33 B	16
				7	2 2 2	0.25 P	24
448.8	Medium dense, brown, gravelly SANDY LOAM; saturated --RDR 2--	20		8	6 8 12	NP	12
	--little gravel--			9	11 11 11	NP	11
443.8	Medium dense, brown SANDY GRAVEL; saturated --RDR 2--	25		10	9 10 13	NP	7
441.3	Medium dense, brown LOAM, trace gravel; moist --RDR 2--			11	3 7 11	NP	7
438.8	Medium dense, brown, medium SAND, trace gravel; saturated --RDR 2--	30		12	5 5 13	NP	19
435.0	Brown SILT; saturated --2-inch thick sand to sandy gravel lenses-- --RDR 2--			13	5 10 40	NP	22
432.5	Very dense, bluish gray, weathered SHALE	35		14	--MSPT 1-- 100/9.5"	NP	13
		40		15	--MSPT 2-- 100/11.5"	NP	14

GENERAL NOTES

Begin Drilling: 06-10-2019 Complete Drilling: 06-10-2019
Drilling Contractor: Wang Testing Services Drill Rig: 17D50A [87%]
Driller: KS&KG&NM Logger: E. Yim Checked by: C. Marin
Drilling Method: 3.25" HSA; boring backfilled upon completion

WATER LEVEL DATA

While Drilling: 18.00 ft
At Completion of Drilling: 20.50 ft
Time After Drilling: 24 hours
Depth to Water: 10.00 ft

The stratification lines represent the approximate boundary between soil types; the actual transition may be gradual.

WANGENGINC 707210 GPJ WANGENG.GDT 4/29/22

Page 2 of 2

Wang Engineering

wangeng@wangeng.com

Telephone:
Fax:

BORING LOG RWB-09

WEI Job No.: 707-21-01

Client: Michael Baker International
Project: Cedar Street Extension at IL Route 29
Location: Tazewell County, IL

Datum: NAVD 88
Elevation: 466.75 ft
North: 1456485.67 ft
East: 2458287.32 ft
Station: 407+51.01
Offset: 65.677 LT

Profile	Elevation (ft)	SOIL AND ROCK DESCRIPTION	Depth (ft)	Sample Type / recovery	Sample No.	SPT Values (blw/6 in)	Qu (tsf)	Moisture Content (%)
		--MSPT 3--			16	00/8.5	NP	12
		--MSPT 4--			17	00/10	NP	11
	421.8	Boring terminated at 45.00 ft	45					

Depth scale: 50, 55, 60

GENERAL NOTES

Begin Drilling: 06-10-2019 Complete Drilling: 06-10-2019
Drilling Contractor: Wang Testing Services Drill Rig: 17D50A [87%]
Driller: KS&KG&NM Logger: E. Yim Checked by: C. Marin
Drilling Method: 3.25" HSA; boring backfilled upon completion

WATER LEVEL DATA

While Drilling: 18.00 ft
At Completion of Drilling: 20.50 ft
Time After Drilling: 24 hours
Depth to Water: 10.00 ft
The stratification lines represent the approximate boundary between soil types; the actual transition may be gradual.

WANGENGINC 707210 GPJ WANGENG.GDT 4/29/22

Page 1 of 1

Wang Engineering

wangeng@wangeng.com

Telephone:
Fax:

BORING LOG RWB-09HA

WEI Job No.: 707-21-01

Client: Michael Baker International
Project: Cedar Street Extension at IL Route 29
Location: Tazewell County, IL

Datum: NAVD 88
Elevation: 473.03 ft
North: 1456470.53 ft
East: 2458282.34 ft
Station: 407+51.58
Offset: 49.7463 LT

Profile	Elevation (ft)	SOIL AND ROCK DESCRIPTION	Depth (ft)	Sample Type / recovery	Sample No.	SPT Values (blw/6 in)	Qu (tsf)	Moisture Content (%)
	472.5	6-inch thick, brown SILTY CLAY LOAM, trace organics; moist to wet		PUSH	1		0.75 P	15
		--TOPSOIL--						
	471.2	Medium stiff, brown CLAY LOAM, trace gravel; wet --FILL--		PUSH	2		0.25 P	19
		Soft to stiff, brown LOAM to CLAY LOAM, trace gravel; wet --FILL-- --L_L(%)=27, P_I(%)=13-- --%Gravel=7.0-- --%Sand=31.0-- --%Silt=46.1-- --%Clay=16.0-- --A-6 (6)--	5	PUSH	3		1.00 P	15
	467.0	Boring terminated at 6.00 ft						

Depth scale: 10, 15, 20

GENERAL NOTES

Begin Drilling: 06-19-2019 Complete Drilling: 06-19-2019
Drilling Contractor: Wang Testing Services Drill Rig: GEOPROBE
Driller: K&KG&NM Logger: E. Yim Checked by: C. Marin
Drilling Method: 1" IDA Pneumatic Geoprobe LB Sampler

WATER LEVEL DATA

While Drilling: DRY
At Completion of Drilling: DRY
Time After Drilling: NA
Depth to Water: NA
The stratification lines represent the approximate boundary between soil types; the actual transition may be gradual.

WANGENGINC 707210 GPJ WANGENG.GDT 4/29/22

Page 1 of 2

Wang Engineering

wangeng@wangeng.com

Telephone:
Fax:

BORING LOG RWB-10

WEI Job No.: 707-21-01

Client: Michael Baker International
Project: Cedar Street Extension at IL Route 29
Location: Tazewell County, IL

Datum: NAVD 88
Elevation: 466.01 ft
North: 1456497.47 ft
East: 2458257.53 ft
Station: 407+13.08
Offset: 64.9981 LT

Profile	Elevation (ft)	SOIL AND ROCK DESCRIPTION	Depth (ft)	Sample Type / recovery	Sample No.	SPT Values (blw/6 in)	Qu (tsf)	Moisture Content (%)
	465.5	6-inch thick, brown TOPSOIL --TOPSOIL--						
		Very stiff, brown SILTY CLAY LOAM, trace gravel and organics; damp --FILL-- --RDR 2--			1	5 4 4	2.79 B	13
	462.0	Very loose to medium dense, black to dark brown LOAM, trace to little gravel and asphalt debris, damp --FILL-- --RDR 2--	5		2	4 7 6	NP	11
					3	1 1 1	NP	23
		--brick fragments--	10		4	2 2 1	NP	21
	455.5	Medium stiff, black SILTY CLAY, trace organic matter --BURIED TOPSOIL--			5	3 3 4	0.49 B	32
	453.0	Soft, black Organic SILTY CLAY; damp --RDR 2--	15		6	2 1 3	0.41 B	69
	450.5	Soft, brown and gray Gravelly LOAM to SANDY LOAM; moist --RDR 2-- --L_L(%)=21, P_I(%)=15-- --%Gravel=20.6-- --%Sand=39.9-- --%Silt=33.0-- --%Clay=6.4-- --A-4 (0)--			7	3 4 5	0.41 B	10
	448.0	Very soft, brown and gray CLAY	20		8	3 4 4	< 0.25 P	19
	446.5	LOAM, little gravel; moist --RDR 2--			9	9 12 16	NP	12
		Medium dense, brown GRAVELLY SANDY LOAM; saturated --RDR 2--	25		10	12 10 11	NP	10
	440.5	Medium dense, brown, fine SAND; saturated --RDR 2--			11	6 10 15	NP	19
	438.0	Very stiff, brown SILTY CLAY LOAM; damp --RDR 2--	30		12	3 8 6	3.77 B	21
	434.3	Medium dense, brown SAND, trace gravel; saturated						
	432.1	Medium stiff, brown CLAY; moist	35		13	2 7 13	0.50 P	22
		Medium dense to very dense, bluish gray, weathered SHALE			14	40 50/3"	NP	13
		--MSPT 1--	40		15	00/10"	NP	13

GENERAL NOTES

Begin Drilling: 05-10-2019 Complete Drilling: 05-10-2019
Drilling Contractor: Wang Testing Services Drill Rig: 17D50A [87%]
Driller: KS&KG&NM Logger: E. Yim Checked by: C. Marin
Drilling Method: 3.25" HSA; boring backfilled upon completion

WATER LEVEL DATA

While Drilling: 15.50 ft
At Completion of Drilling: 15.00 ft
Time After Drilling: 24 hours
Depth to Water: 11.00 ft
The stratification lines represent the approximate boundary between soil types; the actual transition may be gradual.

WANGENGINC 707210 GPJ WANGENG.GDT 4/29/22

MODEL: Default
FILE NAME: pw:\\mo-us-pw.bentley.com:mb-us-pw-03\Documents\Chicago IL\01 Projects\179740 IDOT Cedar\SHEP PhII\5.0 CADD\CAD Sheets\Retaining Wall Sheets\0908517-68C55-WallA-030.dgn

INFRASTRUCTURE ENGINEERING | INCORPORATED

USER NAME = DLamb	DESIGNED -	REVISED -	
	CHECKED -	REVISED -	
PLOT SCALE = 0.1667 ' / in.	DRAWN -	REVISED -	
PLOT DATE = 6/6/2023	CHECKED -	REVISED -	

STATE OF ILLINOIS
DEPARTMENT OF TRANSPORTATION

SOIL BORINGS 7
STRUCTURE NO. 090–8517

SHEET S3-31 OF S3-38 SHEETS

F.A.P. RTE.	SECTION	COUNTY	TOTAL SHEETS	SHEET NO.
VAR.	13 (HVB, HB-3) 8R-1:R	TAZEWELL	1173	798
		CONTRACT NO. 68C55		
	ILLINOIS	FED. AID PROJECT		

Wang Engineering

wangeng@wangeng.com
Telephone:
Fax:

BORING LOG RWB-10

WEI Job No.: 707-21-01

Client: Michael Baker International
Project: Cedar Street Extension at IL Route 29
Location: Tazewell County, IL

Datum: NAVD 88
Elevation: 466.01 ft
North: 1456497.47 ft
East: 2458257.53 ft
Station: 407+13.08
Offset: 64.9981 LT

Profile	Elevation (ft)	SOIL AND ROCK DESCRIPTION	Depth (ft)	Sample Type / recovery	Sample No.	SPT Values (blw/6 in)	Qu (tsf)	Moisture Content (%)
		--MSPT 2--		X	16	100/10.5"	NP	10
		--MSPT 3--		X	17	100/9"	NP	9
		--MSPT 4--		X	18	100/6.5"	NP	14
	418.5	Boring terminated at 47.50 ft						

Depth scale: 45, 50, 55, 60

GENERAL NOTES

Begin Drilling: 05-10-2019 Complete Drilling: 05-10-2019
Drilling Contractor: Wang Testing Services Drill Rig: 17D50A [87%]
Driller: KS&KG&NM Logger: E. Yim Checked by: C. Marin
Drilling Method: 3.25" HSA; boring backfilled upon completion

WATER LEVEL DATA

While Drilling: 15.50 ft
At Completion of Drilling: 15.00 ft
Time After Drilling: 24 hours
Depth to Water: 11.00 ft

The stratification lines represent the approximate boundary between soil types; the actual transition may be gradual.

Wang Engineering

wangeng@wangeng.com
Telephone:
Fax:

BORING LOG RWB-10HA

WEI Job No.: 707-21-01

Client: Michael Baker International
Project: Cedar Street Extension at IL Route 29
Location: Tazewell County, IL

Datum: NAVD 88
Elevation: 478.51 ft
North: 1456473.26 ft
East: 2458235.89 ft
Station: 407+03.06
Offset: 33.7967 LT

Profile	Elevation (ft)	SOIL AND ROCK DESCRIPTION	Depth (ft)	Sample Type / recovery	Sample No.	SPT Values (blw/6 in)	Qu (tsf)	Moisture Content (%)
	478.1	5-inch thick, brown LOAM, trace organics; damp --TOPSOIL--			1	PUSH	1.75 P	12
	477.7	Medium dense, brown LOAM; damp --FILL--			2	PUSH	3.25 P	12
		Stiff to very stiff, brown CLAY LOAM to LOAM, trace gravel; damp --FILL--	5		3	PUSH	2.00 P	14
	472.6	Brown and gray LOAM, little gravel; damp --FILL--			4	PUSH	2.25 P	18
		Stiff to very stiff, brown and gray CLAY LOAM, trace gravel; moist --FILL--	10		5	PUSH	2.25 P	14
					6	PUSH	1.25 P	14
	468.5	Boring terminated at 10.00 ft						

Depth scale: 15, 20

GENERAL NOTES

Begin Drilling: 06-19-2019 Complete Drilling: 06-19-2019
Drilling Contractor: Wang Testing Services Drill Rig: GEOPROBE
Driller: KS&KG&NM Logger: E. Yim Checked by: C. Marin
Drilling Method: 1" IDA Pneumatic Geoprobe LB Sampler

WATER LEVEL DATA

While Drilling: DRY
At Completion of Drilling: DRY
Time After Drilling: NA
Depth to Water: NA

The stratification lines represent the approximate boundary between soil types; the actual transition may be gradual.

Wang Engineering

wangeng@wangeng.com
Telephone:
Fax:

BORING LOG RWB-14HA

WEI Job No.: 707-21-01

Client: Michael Baker International
Project: Cedar Street Extension at IL Route 29
Location: Tazewell County, IL

Datum: NAVD 88
Elevation: 496.74 ft
North: 1456278.58 ft
East: 2458091.54 ft
Station: 308+46.63
Offset: 32.7183 LT

Profile	Elevation (ft)	SOIL AND ROCK DESCRIPTION	Depth (ft)	Sample Type / recovery	Sample No.	SPT Values (blw/6 in)	Qu (tsf)	Moisture Content (%)
	496.2	6-inch thick, stiff, black SILTY CLAY LOAM --TOPSOIL--			1	PUSH	1.75 P	8
		Brown, gravelly LOAM; dry --3-inch thick, clay loam lenses-- --FILL--			2	PUSH	NP	12
	492.9	Stiff, brown CLAY LOAM --FILL--			3	PUSH	1.75 P	15
	491.7	Brown, medium SAND, trace gravel; damp to wet --FILL--	5		4	PUSH	NP	6
		--2-inch thick, stiff (1.50 P), clay loam lenses--	10		5	PUSH	NP	11
					6	PUSH	NP	13
		--wet--			7	PUSH	NP	9
			15		8	PUSH	NP	12
	481.2	Very stiff, brown and gray CLAY LOAM, trace to little gravel			9	PUSH	3.50 P	12
					10	PUSH	3.75 P	13
	476.7	Boring terminated at 20.00 ft	20					

GENERAL NOTES

Begin Drilling: 06-19-2019 Complete Driling: 06-19-2019
Drilling Contractor: Wang Testing Services Drill Rig: GEOPROBE
Driller: N&A&B Logger: F. Bozga Checked by: C. Marin
Drilling Method: 1" IDA Pneumatic Geoprobe LB Sampler

WATER LEVEL DATA

While Drilling: 14.00 ft
At Completion of Drilling: 16.00 ft
Time After Drilling: NA
Depth to Water: NA

The stratification lines represent the approximate boundary between soil types; the actual transition may be gradual.

INFRASTRUCTURE ENGINEERING | INCORPORATED

USER NAME = DLamb	DESIGNED -	REVISED -
	CHECKED -	REVISED -
PLOT SCALE = 0.1667 ' / in.	DRAWN -	REVISED -
PLOT DATE = 8/6/2023	CHECKED -	REVISED -

STATE OF ILLINOIS
DEPARTMENT OF TRANSPORTATION

SOIL BORINGS 8
STRUCTURE NO. 090–8517

SHEET S3-32 OF S3-38 SHEETS

F.A.P. RTE.	SECTION	COUNTY	TOTAL SHEETS	SHEET NO.
VAR.	13 (HVB, HB-3) BR-1;R	TAZEWELL	1173	799
		CONTRACT NO. 68C55		
		ILLINOIS FED. AID PROJECT		

Wang Engineering

wangeng@wangeng.com
Telephone:
Fax:

BORING LOG RWB-15

WEI Job No.: 707-21-01

Client: Michael Baker International
Project: Cedar Street Extension at IL Route 29
Location: Tazewell County, IL

Datum: NAVD 88
Elevation: 470.27 ft
North: 1456248.28 ft
East: 2458032.96 ft
Station: 308+79.91
Offset: 24.0398 RT

Elevation (ft)	SOIL AND ROCK DESCRIPTION	Sample Type	Sample No.	SPT Values (blw/6 in)	Qu (tsf)	Moisture Content (%)
469.9	4-inch thick TOPSOIL --TOPSOIL--					
	Stiff to very stiff, brown CLAY LOAM, trace gravel; damp --FILL--		1	4 7 9	2.00 P	12
			2	2 5 5	1.72 B	12
464.8	Soft to medium stiff, brown SILTY CLAY LOAM, trace gravel; damp to moist --FILL-- --RDR 2--		3	4 2 2	0.66 B	22
	--1-inch thick, black gravel lens; moist--			2		
	--1-inch thick, black gravel lens; moist--		4	2 1 2	0.41 B	30
459.8	Soft, brown and black CLAY LOAM, trace gravel; moist --RDR 2--		5	5 7 8	0.33 B	18
457.3	Medium dense, brown SANDY GRAVEL; saturated --RDR 2--		6	6 8 8	NP	9
454.8	Loose to medium dense, brown, coarse SAND; saturated --RDR 2 to 3--		7	1 3 5	NP	14
451.3	Stiff, brown CLAY LOAM, little gravel; moist		8	6 7 8	1.00 P	16

Elevation (ft)	SOIL AND ROCK DESCRIPTION	Sample Type	Sample No.	SPT Values (blw/6 in)	Qu (tsf)	Moisture Content (%)
449.8	--2-inch thick gravel lens; saturated-- --RDR 2--					
	Medium dense, brown SILTY LOAM, trace gravel; damp to wet --RDR 2--		9	8 4 10	NP	18
	--sandy gravel lens-- --few clay lenses--		10	5 8 14	NP	21
	--5-inch thick sandy gravel; saturated--		11	5 9 12	NP	24
441.3	--sand lenses; saturated-- Soft to medium stiff, gray SILTY CLAY LOAM to SILTY LOAM, trace gravel; damp --RDR 2--		12	5 6 4	0.02 B	14
			13	7 13 18	0.33 S	9
437.3	Dense to very dense, bluish gray, weathered SHALE --RDR 2-- --MSPT 1-- --vertical fracture--		14	00/17"	NP	13
	--MSPT 2--		15	00/21"	NP	16
	--MSPT 3--		16	00/11.5"	NP	14

GENERAL NOTES

Begin Drilling: 05-29-2019 Complete Drilling: 05-29-2019
Drilling Contractor: Wang Testing Services Drill Rig: 17D50A [87%]
Driller: K&N&K Logger: E. Yim Checked by: C. Marin
Drilling Method: 3.25" HSA; boring backfilled upon completion

WATER LEVEL DATA

While Drilling: 13.00 ft
At Completion of Drilling: 18.00 ft
Time After Drilling: NA
Depth to Water: NA
The stratification lines represent the approximate boundary between soil types; the actual transition may be gradual.

WANGENGINC 707210 GPJ WANGENG.GDT 4/29/22

Wang Engineering

wangeng@wangeng.com
Telephone:
Fax:

BORING LOG RWB-15

WEI Job No.: 707-21-01

Client: Michael Baker International
Project: Cedar Street Extension at IL Route 29
Location: Tazewell County, IL

Datum: NAVD 88
Elevation: 470.27 ft
North: 1456248.28 ft
East: 2458032.96 ft
Station: 308+79.91
Offset: 24.0398 RT

Elevation (ft)	SOIL AND ROCK DESCRIPTION	Sample Type	Sample No.	SPT Values (blw/6 in)	Qu (tsf)	Moisture Content (%)
428.4	--MSPT 4--		17	00/11"	NP	13
	Boring terminated at 41.90 ft					

GENERAL NOTES

Begin Drilling: 05-29-2019 Complete Drilling: 05-29-2019
Drilling Contractor: Wang Testing Services Drill Rig: 17D50A [87%]
Driller: K&N&K Logger: E. Yim Checked by: C. Marin
Drilling Method: 3.25" HSA; boring backfilled upon completion

WATER LEVEL DATA

While Drilling: 13.00 ft
At Completion of Drilling: 18.00 ft
Time After Drilling: NA
Depth to Water: NA
The stratification lines represent the approximate boundary between soil types; the actual transition may be gradual.

WANGENGINC 707210 GPJ WANGENG.GDT 4/29/22

Wang Engineering

wangeng@wangeng.com
Telephone:
Fax:

BORING LOG RWB-16

WEI Job No.: 707-21-01

Client: Michael Baker International
Project: Cedar Street Extension at IL Route 29
Location: Tazewell County, IL

Datum: NAVD 88
Elevation: 469.87 ft
North: 1456199.18 ft
East: 2458006.48 ft
Station: 309+40.49
Offset: 38.9941 RT

Elevation (ft)	SOIL AND ROCK DESCRIPTION	Sample Type	Sample No.	SPT Values (blw/6 in)	Qu (tsf)	Moisture Content (%)
	14-inch thick, brown SILTY CLAY LOAM					
458.7	--TOPSOIL-- Soft to very stiff, brown SILTY CLAY to SILTY CLAY LOAM, trace gravel --RDR 2-- --trace organic matter--		1	6 7 6	< 0.25 P	11
			2	3 4 5	0.98 B	24
			3	2 1 2	0.25 B	24
			4	2 1 1	0.25 B	23
459.4	Medium dense, brown SANDY GRAVEL; saturated --RDR 2--		5	8 10 8	NP	10
			6	7 8 11	NP	10
	--brown LOAM lenses--		7	7 9 8	NP	12
453.0	Medium dense, brown SILT to SILTY LOAM, clay laminations and sand lens, trace gravel; saturated --RDR 2--		8	5 4 10	NP	21

Elevation (ft)	SOIL AND ROCK DESCRIPTION	Sample Type	Sample No.	SPT Values (blw/6 in)	Qu (tsf)	Moisture Content (%)
449.4	Medium dense, brown SANDY LOAM, trace gravel; saturated --few silt and clay lenses--		9	14 8 13	1.48 B	20
447.9	Stiff, brown SILTY CLAY; moist --RDR 2--					
446.9	Brown to gray SILTY LOAM to SILT, trace gravel; saturated					
446.1	Very stiff to hard, gray SILTY CLAY to SILTY CLAY LOAM, trace gravel; damp --RDR 2 to 3--		10	6 10 8	5.00 B	12
			11	6 10 12	5.25 B	13
440.6	Very dense, light bluish gray WEATHERED SHALE --RDR 2--		12	6 8 15	2.79 B	15
	--MSPT 1--		13	00/10"	NP	8
	--MSPT 2--		14	00/15.5"	NP	9
	--MSPT 3--		15	00/10.5"	NP	13
	--MSPT 4--		16	00/12.5"	NP	10
430.3	Boring terminated at 39.54 ft					

GENERAL NOTES

Begin Drilling: 05-29-2019 Complete Drilling: 05-29-2019
Drilling Contractor: Wang Testing Services Drill Rig: 17D50A [87%]
Driller: K&N&K Logger: E. Yim Checked by: C. Marin
Drilling Method: 3.25" HSA; boring backfilled upon completion

WATER LEVEL DATA

While Drilling: 10.50 ft
At Completion of Drilling: NA
Time After Drilling: 24 hours
Depth to Water: 28.00 ft
The stratification lines represent the approximate boundary between soil types; the actual transition may be gradual.

WANGENGINC 707210 GPJ WANGENG.GDT 4/29/22

MODEL: Default
FILE NAME: pw:\\mo-us-pw.bentley.com:mb-us-pw-03\Documents\Chicago IL\01 Projects\179340 IDOT Cedar\SIE+ Phl15.0 CADD\CAD Sheets\Retaining Wall Sheets\0908517-68C55-Wall04-032.dgn

INFRASTRUCTURE ENGINEERING | INCORPORATED

USER NAME = DLamb	DESIGNED -	REVISED -
	CHECKED -	REVISED -
PLOT SCALE = 0.1667 ' / in.	DRAWN -	REVISED -
PLOT DATE = 6/6/2023	CHECKED -	REVISED -

STATE OF ILLINOIS
DEPARTMENT OF TRANSPORTATION

SOIL BORINGS 9
STRUCTURE NO. 090–8517

SHEET S3-33 OF S3-38 SHEETS

F.A.P. RTE.	SECTION	COUNTY	TOTAL SHEETS	SHEET NO.
VAR.	13 (HVB, HB-3) 8R-1:R	TAZEWELL	1173	800
		CONTRACT NO. 68C55		
	ILLINOIS	FED. AID PROJECT		