LT – Unit 1

Bar	No.	Size	Length	Shape
a100(E)	1817	#5	30'-0"	
a101(E)	821	#5	15'-0"	
a102(E)	115	#5	18'-5"	
a103(E)	109	#5	20'-11"	
a104(E)	109	#5	23'-5"	
a105(E)	109	#5	25'-11"	
a106(E)	108	#5	28'-5"	
a107(E)	142	#5	31'-8"	
a108(E)	125	#5	14'-2"	
a109(E)	190	#5	16'-6"	
a110(E)	869	#5	30'-6"	
a111(E)	181	#5	18'-1"	
a112(E)	177	#5	20'-6"	
a113(E)	179	#5	23'-0"	
a114(E)	178	#5	25'-6"	
a115(E)	178	#5	28'-0"	
a116(E)	232	#5	31'-3"	
a117(E)	205	#5	13'-9"	
a118(E)	301	#5	16'-1"	
a119(E)	2700	#6	8'-4"	
a120(E)	4	#5	4'-3"	
a121(E)	5	#5	8'-11"	
a122(E)	1	#5	7'-3"	
a123(E)	4	#5	7'-11"	
a124(E)	2	#5	3'-10"	
a125(E)	1	#5	8'-9"	
a127(E)	96	#5	1'-6"	
a128(E)	1628	#6	6'-6"	
a129(E)	60	#5	14'-11"	
a130(E)	96	#5	19'-8"	
a131(E)	54	#5	14'-9"	
a132(E)	98	#5	19'-0"	
a133(E)	166	#5	19'-2"	
a134(E)	90	#5	18'-11"	
b100(E)	2193	#5	30'-0"	
b101(E)	172	#5	15'-0"	
b102(E)	3	#5	17'-6"	
b103(E)	53	#5	19'-4"	
b104(E)	20	#5	31'-10"	
b105(E)	329	#5	32'-8"	
b106(E)	56	#5	35'-4"	
b107(E)	12	#6	30'-7"	
b108(E)	2	#6	15'-7"	
b109(E)	45	#6	33'-3"	
b110(E)	66	#6	34'-0"	
b111(E)	7	#6	35'-6"	
b112(E)	81	#6	35'-6"	
b113(E)	114	#6	43'-4"	

LT – Unit 1 (Continued)

Bar	No.	Size	Length	Shape
b114(E)	150	#6	45'-6"	
b116(E)	8	#5	17'-8"	
b117(E)	2	#6	18'-5"	
b118(E)	18	#5	19'-8"	
b119(E)	12	#5	38'-1"	
b120(E)	18	#5	36'-6"	
b121(E)	15	#5	34'-4"	
b122(E)	12	#5	31'-9"	
c100(E)	747	#5	5'-0"	
x100(E)	80	#5	7'-9"	
x101(E)	80	#5	4'-1"	
d100(E)	687	#5	7'-0"	
d101(E)	1845	#5	8'-2"	
d102(E)	6	#5	11'-6"	
d103(E)	21	#6	5'-3"	
d104(E)	42	#6	8'-11"	
d105(E)	1158	#5	7'-0"	
e100(E)	432	#4	19'-8"	
e101(E)	24	#4	14'-2"	
e102(E)	24	#4	14'-4"	
e103(E)	8	#4	15'-7"	
e104(E)	24	#4	14'-1"	
e105(E)	24	#4	16'-10"	
e106(E)	8	#4	14'-9"	
e107(E)	8	#4	15'-6"	
e108(E)	8	#4	17'-8"	
e109(E)	16	#4	37'-8"	
e110(E)	24	#4	36'-0"	
e111(E)	20	#4	33'-1"	
e112(E)	16	#4	32'-7"	
e113(E)	16	#4	34'-8"	
e114(E)	8	#4	38'-8"	
e115(E)	8	#4	39'-0"	
e116(E)	16	#4	31'-3"	
e117(E)	12	#4	5'-0"	
Concrete Superstructure			Cu. Yd.	1,292.0
Protective Coat			Sq. Yd.	4,844
Reinforcement Bars, Epoxy Coated			Pound	380,640
Diamond Grinding (Bridge Section)			Sq. Yd.	3,589
Bridge Deck Grooving (Longitudinal)			Sq. Yd.	2,354

RT – Unit 1

Bar	No.	Size	Length	Shape
a200(E)	1214	#5	30'-0"	
a201(E)	1426	#5	15'-0"	
a202(E)	79	#5	18'-7"	
a203(E)	73	#5	21'-5"	
a204(E)	72	#5	24'-3"	
a205(E)	80	#5	27'-4"	
a206(E)	79	#5	30'-5"	
a207(E)	80	#5	33'-6"	
a208(E)	267	#5	14'-10"	
a209(E)	934	#5	30'-6"	
a210(E)	277	#5	16'-5"	
a211(E)	119	#5	18'-2"	
a212(E)	120	#5	21'-0"	
a213(E)	120	#5	23'-10"	
a214(E)	131	#5	26'-11"	
a215(E)	130	#5	30'-1"	
a216(E)	131	#5	33'-1"	
a217(E)	438	#5	14'-5"	
a218(E)	444	#5	16'-1"	
a219(E)	2778	#6	8'-4"	
a220(E)	4	#5	4'-3"	
a221(E)	5	#5	8'-11"	
a222(E)	1	#5	7'-1"	
a223(E)	4	#5	7'-11"	
a224(E)	2	#5	3'-10"	
a225(E)	1	#5	8'-9"	
a227(E)	96	#5	1'-6"	
a228(E)	1627	#6	6'-6"	
a229(E)	91	#5	22'-4"	
a230(E)	20	#5	24'-2"	
a231(E)	129	#5	16'-10"	
a232(E)	158	#5	20'-11"	
a233(E)	47	#5	17'-7"	
a234(E)	210	#5	21'-0"	
b200(E)	2118	#5	30'-0"	
b201(E)	127	#5	15'-0"	
b202(E)	8	#5	14'-1"	
b203(E)	50	#5	19'-4"	
b204(E)	24	#5	26'-7"	
b205(E)	61	#5	26'-9"	
b206(E)	52	#5	27'-5"	
b207(E)	143	#5	35'-4"	
b208(E)	3	#5	43'-11"	
b210(E)	3	#6	15'-7"	
b211(E)	5	#6	27'-4"	
b212(E)	28	#6	30'-7"	
b213(E)	66	#6	34'-0"	

RT – Unit 1 (Continued)

Bar	No.	Size	Length	Shape
b214(E)	7	#6	35'-11"	
b215(E)	129	#6	43'-4"	
b216(E)	69	#6	45'-6"	
b217(E)	81	#6	49'-0"	
b218(E)	4	#6	29'-7"	
b219(E)	9	#6	40'-9"	
b220(E)	34	#5	26'-6"	
b221(E)	18	#5	19'-8"	
b222(E)	12	#5	38'-1"	
b223(E)	18	#5	36'-6"	
b224(E)	15	#5	34'-4"	
b225(E)	12	#5	31'-9"	
c200(E)	747	#5	5'-0"	
x200(E)	79	#5	7'-9"	
x201(E)	79	#5	4'-1"	
d200(E)	1010	#5	7'-0"	
d201(E)	1908	#5	8'-2"	
d202(E)	8	#5	11'-6"	
d203(E)	12	#6	5'-3"	
d204(E)	24	#6	8'-11"	
d205(E)	898	#5	7'-0"	
e200(E)	448	#4	19'-8"	
e201(E)	48	#4	14'-3"	
e202(E)	24	#4	16'-3"	
e203(E)	8	#4	17'-8"	
e204(E)	24	#4	15'-7"	
e205(E)	16	#4	14'-1"	
e206(E)	8	#4	16'-7"	
e207(E)	16	#4	37'-9"	
e208(E)	24	#4	36'-0"	
e209(E)	20	#4	35'-11"	
e210(E)	16	#4	31'-3"	
e211(E)	8	#4	25'-0"	
e212(E)	8	#4	25'-7"	
e213(E)	20	#4	37'-4"	
e214(E)	20	#4	33'-11"	
e215(E)	12	#4	7'-0"	
Concrete Superstructure			Cu. Yd.	1,219.3
Protective Coat			Sq. Yd.	4,511
Reinforcement Bars, Epoxy Coated			Pound	363,340
Preformed Joint Seal 1"			Foot	746
Diamond Grinding (Bridge Section)			Sq. Yd.	3,225
Bridge Deck Grooving (Longitudinal)			Sq. Yd.	2,108

NOTES:

1. Reinforcement bars designated (E) shall be epoxy coated.
2. For Bill of Material for RT Unit 2 and bar bends, see S-76.

RT - Unit 2				
Bar	No.	Size	Length	Shape
a300(E)	806	#5	30'-6"	
a301(E)	994	#5	8'-4"	
a302(E)	15	#5	8'-11"	
a303(E)	10	#5	4'-3"	
a304(E)	8	#5	1'-6"	
b300(E)	464	#5	30'-0"	
b301(E)	58	#5	11'-2"	
b302(E)	81	#6	30'-1"	
x300(E)	48	#5	7'-9"	
x301(E)	48	#5	4'-1"	
d300(E)	341	#5	7'-0"	
d301(E)	653	#5	8'-2"	
d302(E)	3	#6	5'-3"	
d303(E)	6	#6	8'-11"	
d304(E)	312	#5	7'-0"	
e300(E)	112	#4	19'-8"	
e301(E)	24	#4	17'-3"	
e302(E)	24	#4	17'-6"	
e303(E)	24	#4	14'-4"	
e304(E)	24	#4	14'-1"	
e305(E)	12	#4	32'-6"	
e306(E)	12	#4	32'-9"	
e307(E)	12	#4	29'-6"	
e308(E)	12	#4	29'-4"	
Concrete Superstructure			Cu. Yd.	249.3
Protective Coat			Sq. Yd.	890
Reinforcement Bars, Epoxy Coated			Pound	67,840
Diamond Grinding (Bridge Section)			Sq. Yd.	579
Bridge Deck Grooving (Longitudinal)			Sq. Yd.	389

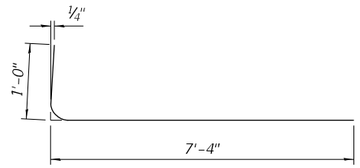

BARS a119(E), a219(E), a301(E)

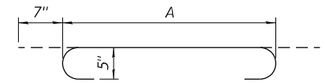

Bar	A
a120(E)	3'-1"
a121(E)	7'-9"
a122(E)	6'-1"
a123(E)	6'-9"
a124(E)	2'-8"
a125(E)	7'-7"
a220(E)	3'-1"
a221(E)	7'-9"
a222(E)	5'-11"
a223(E)	6'-9"
a224(E)	2'-8"
a225(E)	7'-7"
a302(E)	7'-9"
a303(E)	3'-1"

BARS a120(E) thru a125(E), a220E) thru a225(E), a302(E), a303(E)

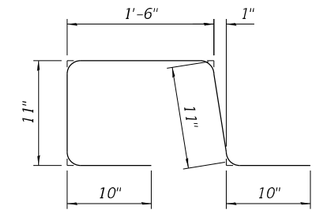

BARS c100(E), c200(E)

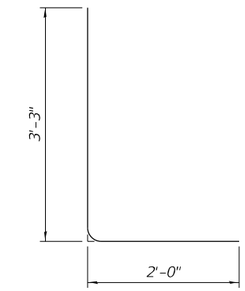

BARS d103(E), d203(E), d302(E)

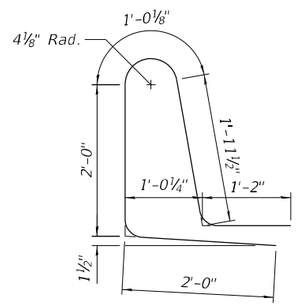

BARS d101(E), d201(E), d301(E)

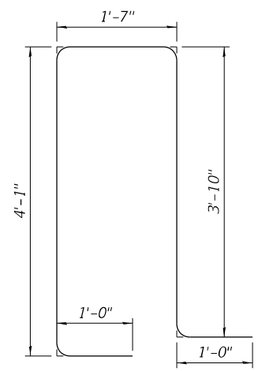

BARS d102(E), d202(E)

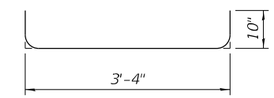

BAR e117(E)

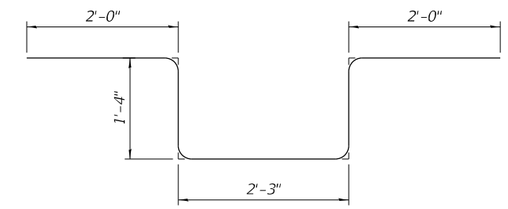

BARS d104(E), d204(E), d303(E)

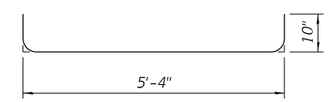

BAR e215(E)

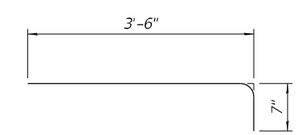

BARS x101(E), x201(E), x301(E)

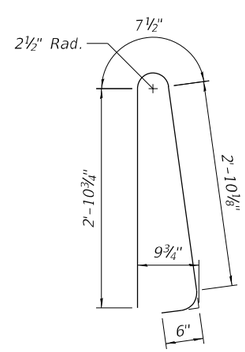

BARS d100(E), d200(E), d300(E)

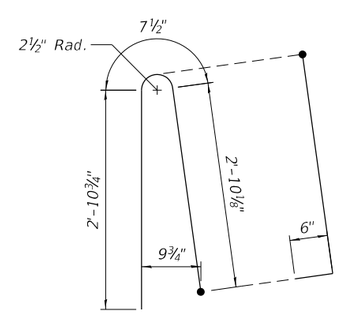

BARS d105(E), d205(E), d304(E)

Use when conduit present

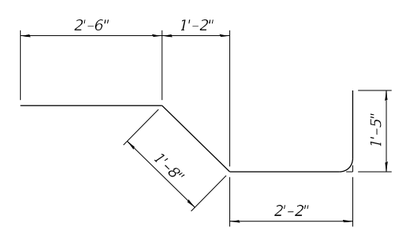

BARS x100(E), x200(E), x300(E)

NOTES:

1. Reinforcement bars designated (E) shall be epoxy coated.
2. For Bill of Material for LT Unit 1 and RT Unit 1, see S-75.

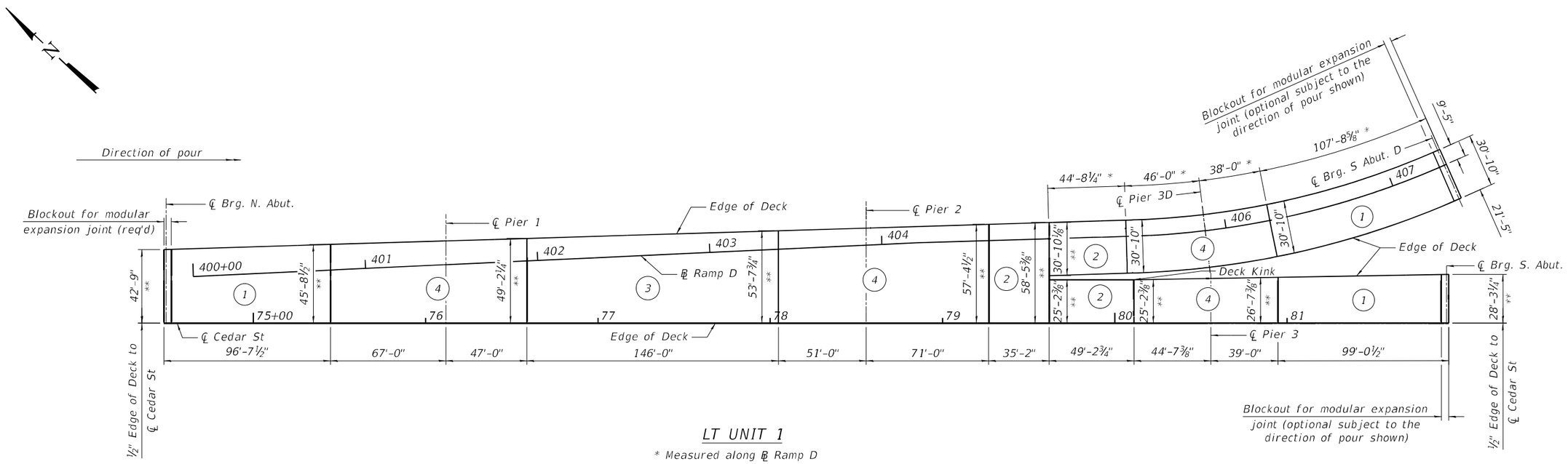

LT UNIT 1

* Measured along ℄ Ramp D

** Out-to-out deck measured perpendicular to ℄ Cedar St.

DECK POURING SEQUENCE

The bridge deck shall be poured in the numeric sequence shown. If the Contractor wishes to alter the deck pouring sequence from the sequence shown, the Contractor shall submit a proposed deck pouring seqence to the Engineer for review and acceptance.

Longitudinal dimensions are measured along ℄ Cedar St. U.N.O.

When the deck pour is stopped for the day at one or more of the transverse Bonded Construction Joints in the Deck Pouring Sequence as shown, the next pour shall not be made until both of the following requirements are met:

1. At least 72 hours shall have elapsed from the end of the previous pour.

2. The concrete strength shall have attained a minimum flexural strength of 675psi or a minimum compressive strength of 4000 psi.

Blockout areas for modular expansion joints shall not be poured until the above noted time and strength requirements have been met for the adjoining pour.

Modular joint assemblies shall be installed with forming and reinforcement bars in place prior to pouring the adjoining concrete deck span.

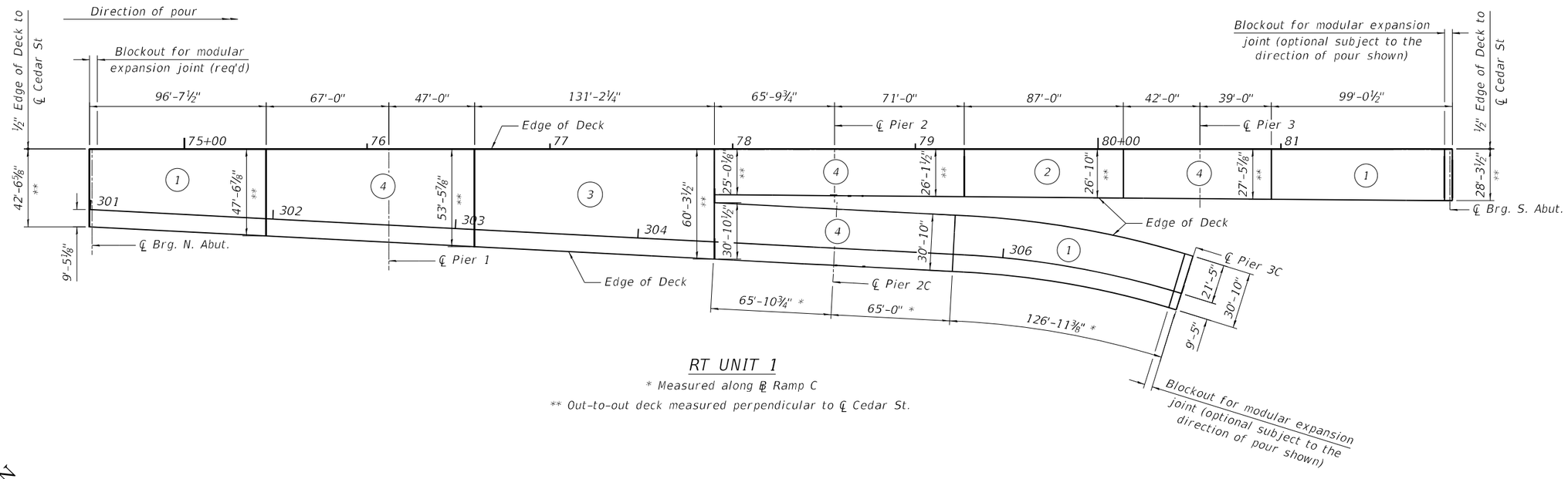

RT UNIT 1

* Measured along ℄ Ramp C

** Out-to-out deck measured perpendicular to ℄ Cedar St.

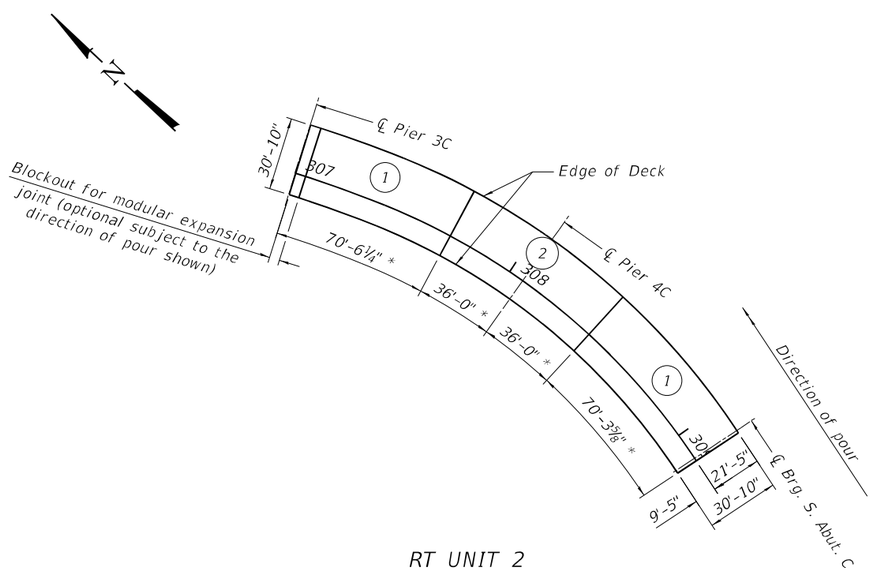

RT UNIT 2

*Measured along ℄ Ramp C

DECK POURING SEQUENCE

The bridge deck shall be poured in the numeric sequence shown. If the Contractor wishes to alter the deck pouring sequence from the sequence shown, the Contractor shall submit a proposed deck pouring seqence to the Engineer for review and acceptance.

Longitudinal dimensions are measured along ℄ Cedar St. U.N.O.

When the deck pour is stopped for the day at one or more of the transverse Bonded Construction Joints in the Deck Pouring Sequence as shown, the next pour shall not be made until both of the following requirements are met:

1. At least 72 hours shall have elapsed from the end of the previous pour.

2. The concrete strength shall have attained a minimum flexural strength of 675psi or a minimum compressive strength of 4000 psi.

Blockout areas for modular expansion joints shall not be poured until the above noted time and strength requirements have been met for the adjoining pour.

Modular joint assemblies shall be installed with forming and reinforcement bars in place prior to pouring the adjoining concrete deck span.

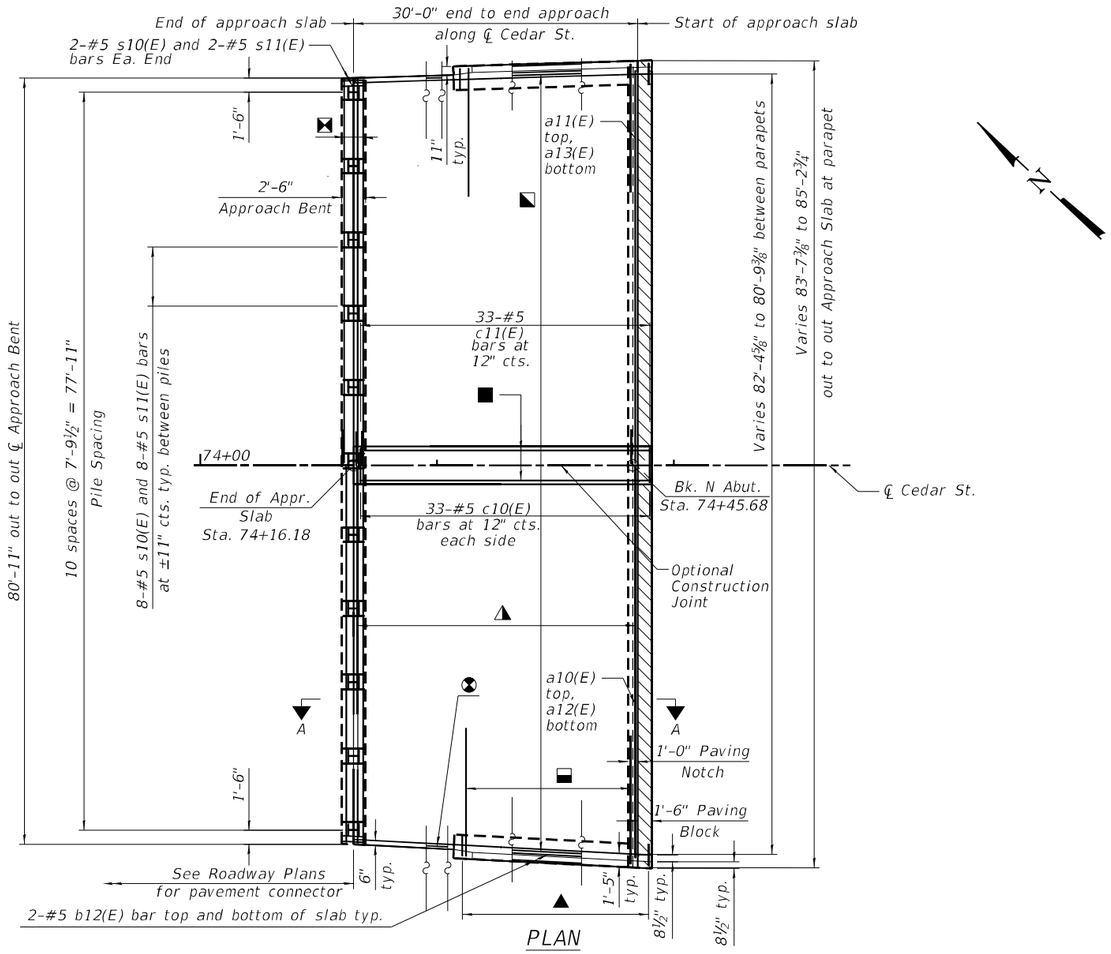

PLAN

LEGEND:

- 16-#6 p11(E) bars lapped with 16-#6 p10(E) bars in Approach Bent. See Sec A-A.
- 46-#5 a10(E) bars lapped with 46-#5 a11(E) bars at 8" cts. max., top of slab., tilt as necessary to fit curb.
  61-#8 a12(E) bars lapped with 61-#8 a13(E) bars at 6" cts. max., bottom of slab.
  Cut a11(E) and a13(E) bars to fit.
- 126-#5 b10(E) bars at 8" cts. max., top of slab.
  202-#9 b11(E) bars at 5" cts. max., bottom of slab.
  Fan b10(E) and b11(E) bars at tapering outside edges of approach slab
- 6-#5 b14(E) bars
- 32-#5 d11(E) bars at 8" cts., typ.
- 32-#5 a14 bars at 8" cts., Top of slab, typ., Lap with each a10(E), and a11(E) bars
- 1-#4 b13(E) bar in curb, typ. Bend to fit taper, typ.
- Paving block

NOTES:

1. See S-80 for Section A-A.
2. Provide Preformed Expansion Joint Filler according to Article 1051.09 of the Standard Specifications. Bond filler to wingwall with suitable adhesive as recommended by supplier. Cost included with Concrete Superstructure (Approach Slabs).

N. APPR. PILE DATA:

Type: HP12x53
Nominal Required Bearing: 187 kips
Factored Resistance Available: 103 kips
Est. Length: 36 feet
No. Production Piles: 10
No. Test Piles: 1

MINIMUM BAR LAPS

Approach Slab Top Transverse #5 bar = 3'-7"
Approach Slab Bottom Transverse #8 bar = 5'-1"
Approach Bent Transverse #6 bar = 4'-9"

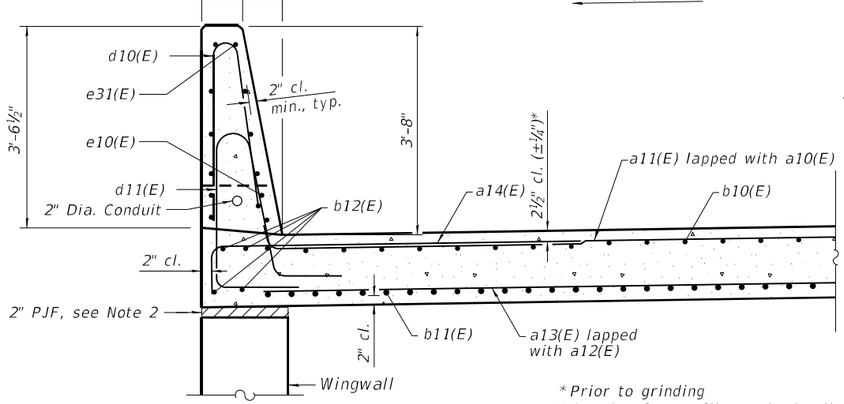

NEAR ABUTMENT

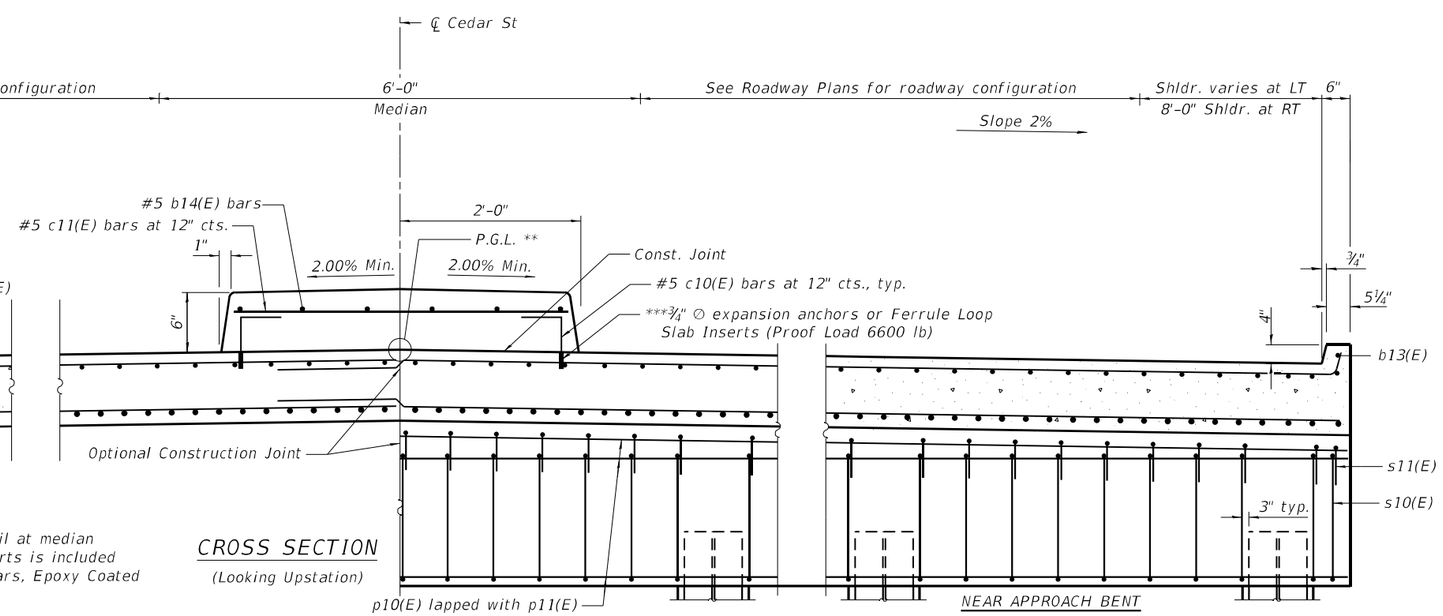

CROSS SECTION

(Looking Upstation)

NEAR APPROACH BENT

* Prior to grinding
** See S-5 for profile grade detail at median
*** Cost of expansion anchors/inserts is included in the cost of Reinforcement Bars, Epoxy Coated

MODEL: Default
FILE NAME: pw:\\mba-us-pw.bentley.com:mba-us-pw-03\Documents\Chicago IL\01 Projects\79740 IDOT Cedar St\Ex Phil\5.0 CADD\CAD Sheets\0900182-68C55-079-H 4pgr H4a.dgn

Michael Baker INTERNATIONAL
200 W Adams Street
Suite 1800
Chicago, IL 60606
P:+1 312.707.8770
FAX: 312.707.8804

USER NAME = DLamb	DESIGNED - CJB	REVISED -	
	CHECKED - TJN	REVISED -	
PLOT SCALE = 15:11.9992 ':" / in.	DRAWN - CJB	REVISED -	
PLOT DATE = 6/6/2023	CHECKED - TJN	REVISED -	

STATE OF ILLINOIS
DEPARTMENT OF TRANSPORTATION

NORTH APPROACH SLAB PLAN
STRUCTURE NO. 090-0182

SHEET S-79 OF S-194 SHEETS

F.A.P. RTE.	SECTION	COUNTY	TOTAL SHEETS	SHEET NO.
VAR.	13 (HVB, HB-3) BR-1;R	TAZEWELL	1173	605
		CONTRACT NO. 68C55		
	ILLINOIS	FED. AID PROJECT		

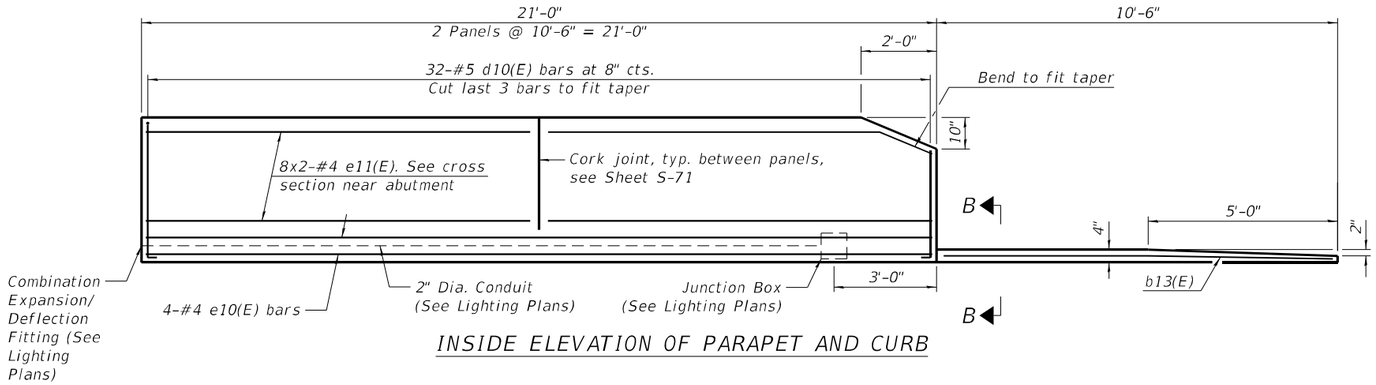

INSIDE ELEVATION OF PARAPET AND CURB

NOTES:

1. Approach slab shall be paid for as Concrete Superstructure (Approach Slab).
2. Approach bent concrete shall be paid for as Concrete Structures.
3. Cost of excavation for approach bent included with Concrete Structures.
4. For Granular Backfill for Structures and drainage treatment details, see sheet S-6.
5. For v10(E) bar details, see sheets S-150 and S-151.
6. Bars indicated thus 8x2-#4 ctc. indicates 8 lines of bars with 2 lengths per line.
7. Parapet concrete shall be paid for as Concrete Superstructure.
8. For Type 6 terminal connections see Highway Standard 631031.
9. For Concrete Encasement and pile details, see sheet S-178.

LEGEND:

Paving block

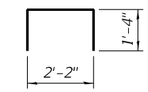

BAR s11(E)

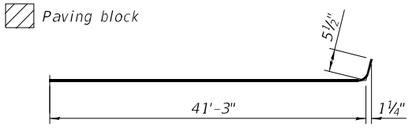

BAR a11(E)

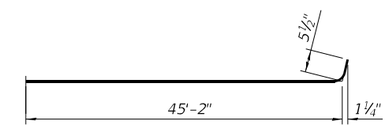

BAR a10(E)

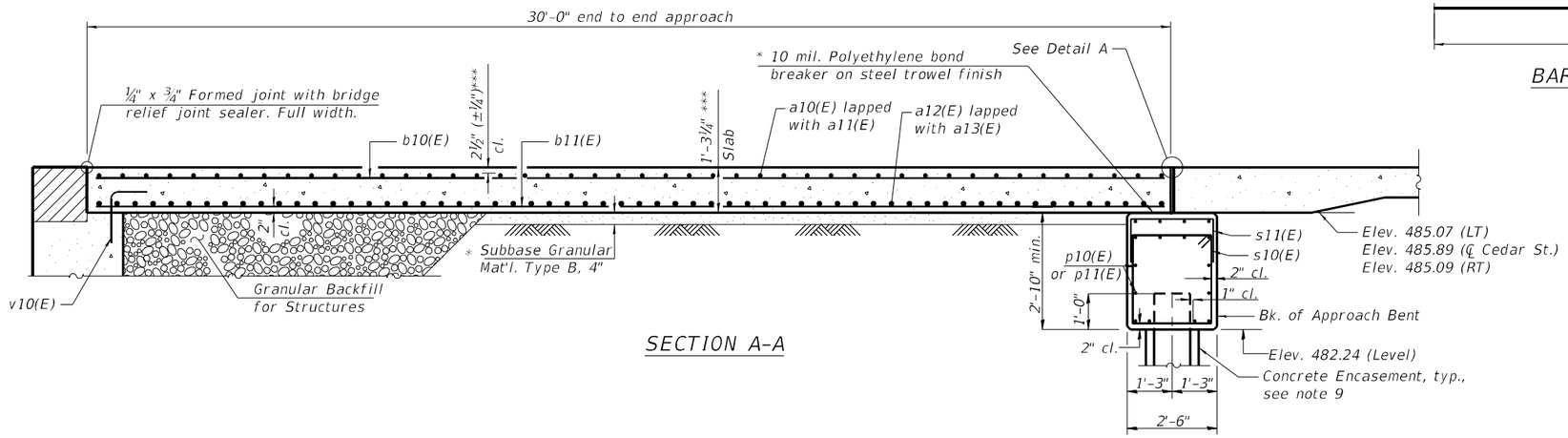

SECTION A-A

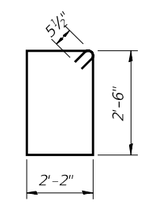

BAR s10(E)

NORTH APPROACH BILL OF MATERIAL

Bar	No.	Size	Length	Shape
a10(E)	46	#5	45'-8"	
a11(E)	46	#5	41'-9"	
a12(E)	61	#8	46'-8"	
a13(E)	61	#8	41'-3"	
a14(E)	64	#5	7'-4"	
b10(E)	126	#5	29'-8"	
b11(E)	202	#9	29'-8"	
b12(E)	8	#5	19'-2"	
b13(E)	2	#5	10'-3"	
b14(E)	6	#5	31'-2"	
c10(E)	66	#5	1'-3"	
c11(E)	33	#5	3'-6"	
d10(E)	64	#5	7'-0"	
d11(E)	64	#5	8'-6"	
e10(E)	8	#4	20'-8"	
e11(E)	32	#4	10'-2"	
p10(E)	16	#6	45'-2"	
p11(E)	16	#6	40'-5"	
s10(E)	84	#5	10'-3"	
s11(E)	84	#4	4'-10"	
Concrete Structures			Cu. Yd.	23.4
Concrete Superstructure			Cu. Yd.	8.6
Concrete Encasement			Cu. Yd.	3.9
Protective Coat			Sq. Yd.	311
Concrete Superstructure (Approach Slab)			Cu. Yd.	117.9
Reinforcement Bars, Epoxy Coated			Pound	48,450
Furnishing Steel Piles HP12x53			Foot	360
Driving Piles			Foot	360
Test Pile Steel HP12x53			Each	1
* Diamond Grinding (Bridge Section)			Sq. Yd.	952
Bridge Deck Grooving (Longitudinal)			Sq. Yd.	185

* Includes 100 ft of pavement adjacent to approach, see special provision for Diamond Grinding and Surface Testing Bridge Section.

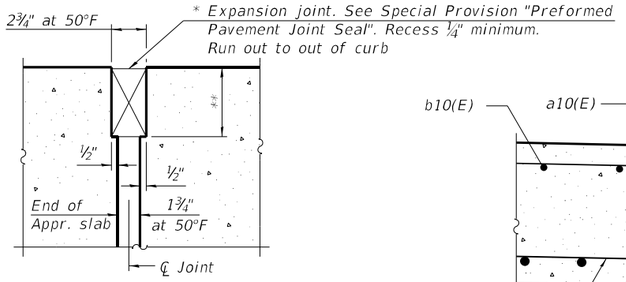

DETAIL A

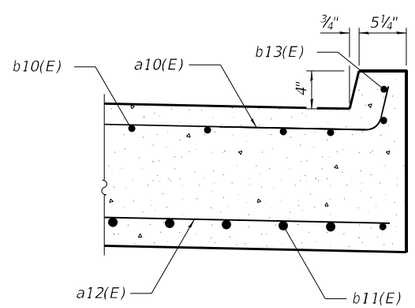

SECTION B-B

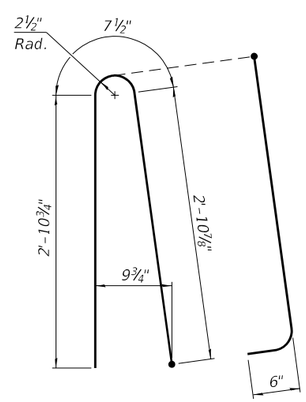

BAR d10(E)

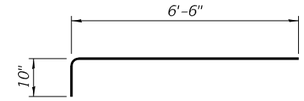

BAR a14(E)

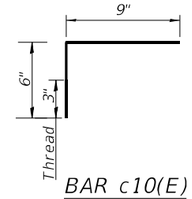

BAR c10(E)

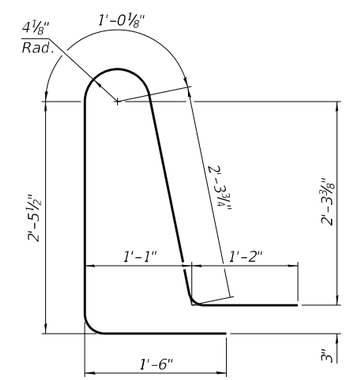

BAR d11(E)

* Cost included with Concrete Superstructure (Approach Slab).

** Per manufacturer recommendations

*** Prior to grinding

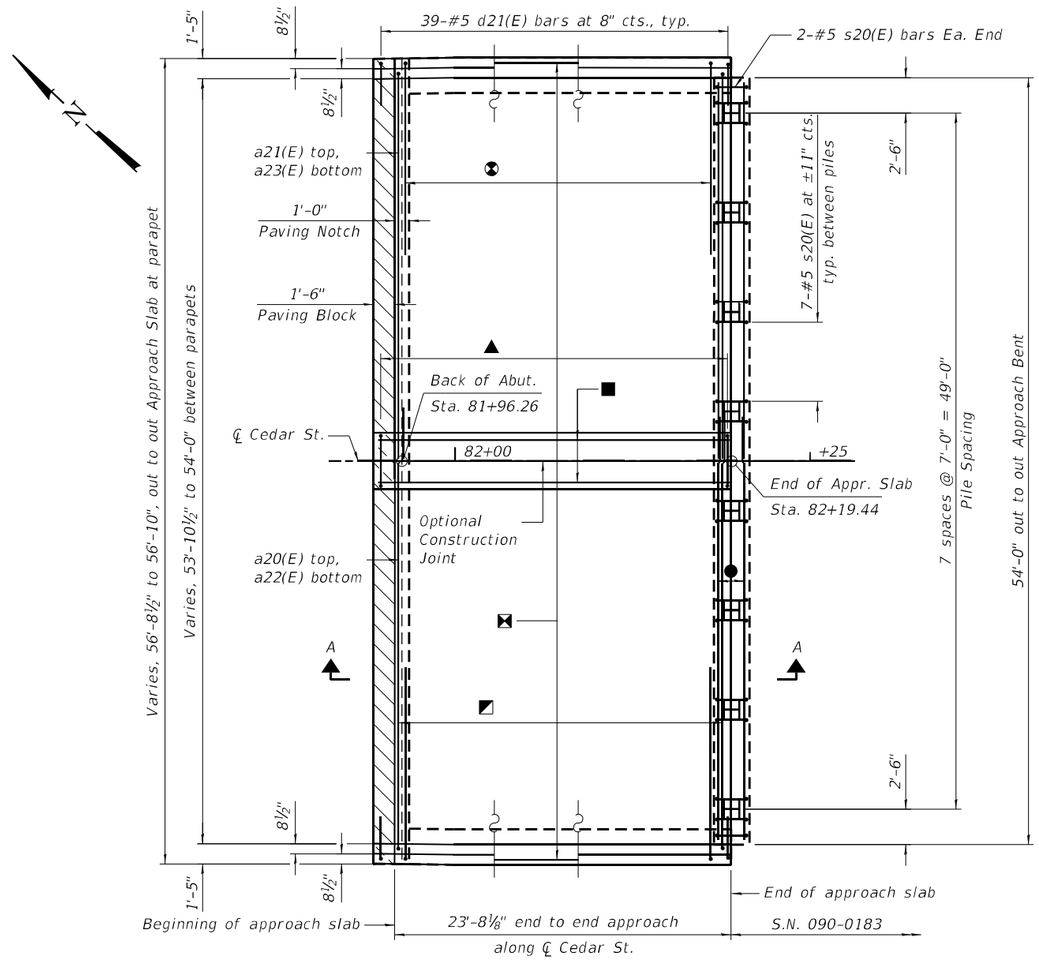

PLAN

LEGEND

- 88-#5 b20(E) bars at 8" cts., Top of slab, 138-#9 b21(E) bars at 5" cts. Bottom of slab
- 37-#5 a24(E) bars at 8" cts., Top of slab, typ., Lap with each a20(E), and a21(E) bars
- 37-#5 a20(E) bars lapped with 37-#5 a21(E) bars at 8" cts. max., top of slab
  48-#8 a22(E) bars lapped with 48-#8 a23(E) bars at 6" cts. max., bottom of slab
- 12-#6 p20(E) bars lapped with 12-#6 p21(E) bars in Approach Bent. See Sec A-A.
- 26-#5 c20(E) bars at 12" cts. each side and 26-#5 c21(E) bars at 12" cts.
- 6-#5 b22(E) bars
- Paving block

NOTES:

1. See S-82 for Section A-A
2. Provide Preformed Expansion Joint Filler according to Article 1051.09 of the Standard Specifications. Bond filler to wingwall with suitable adhesive as recommended by supplier. Cost included with Concrete Superstructure (Approach Slabs).

S. APPR. PILE DATA:

Type: HP12x53
Nominal Required Bearing: 224 kips
Factored Resistance Available: 123 kips
Est. Length: 66 feet
No. Production Piles: 7
No. Test Piles: 1

MINIMUM BAR LAPS

Approach Slab Top Transverse #5 bar = 3'-7"
Approach Slab Bottom Transverse #8 bar = 5'-1"
Approach Bent Transverse #6 bar = 4'-9"

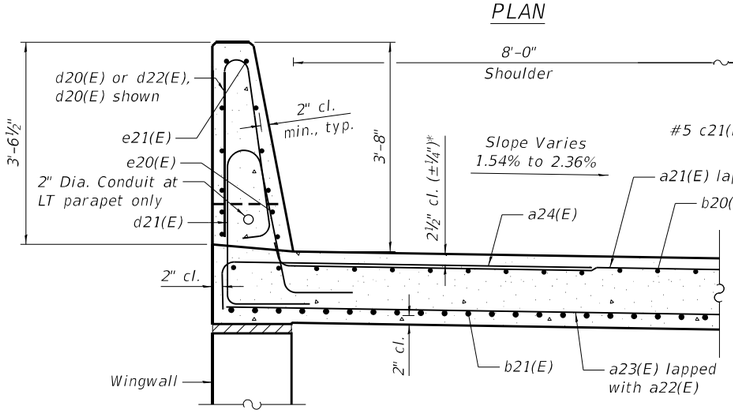

NEAR ABUTMENT

* Prior to grinding
** See S-5 for profile grade detail at median
*** Cost of expansion anchors/inserts is included in the cost of Reinforcement Bars, Epoxy Coated

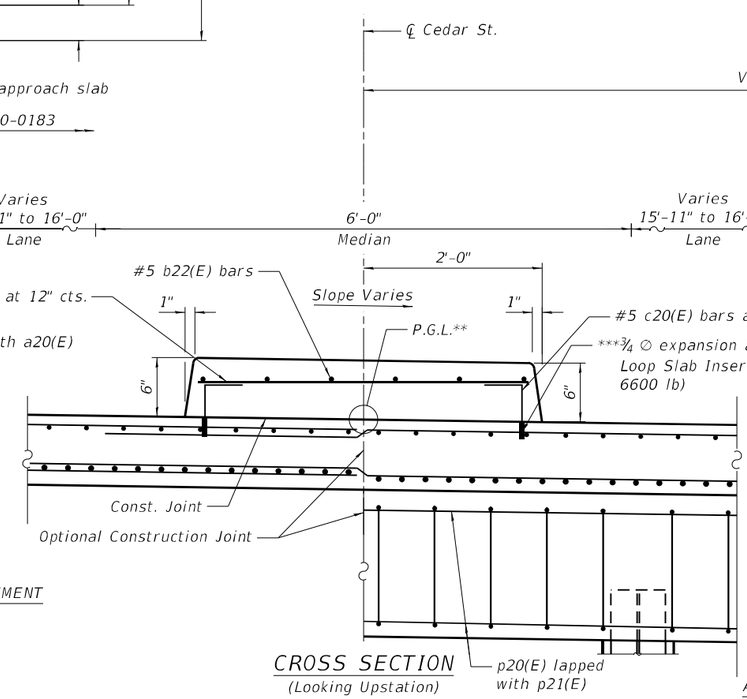

CROSS SECTION
(Looking Upstation)

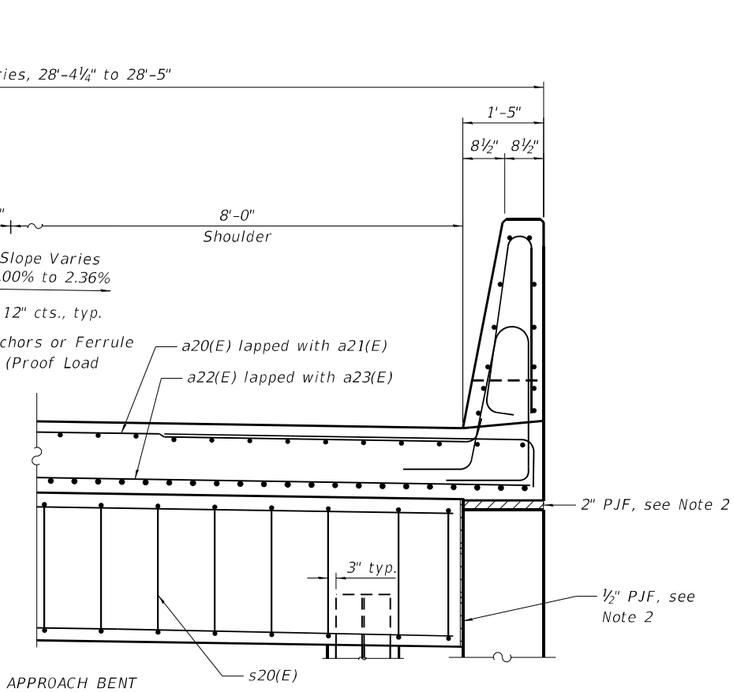

AT APPROACH BENT

Michael Baker INTERNATIONAL 200 W Adams Street Suite 1800 Chicago, IL 60606 PH: 312.707.8772 FAX: 312.707.8804	USER NAME = DLamb	DESIGNED - TJN	REVISED -	STATE OF ILLINOIS DEPARTMENT OF TRANSPORTATION	SOUTH APPROACH SLAB PLAN STRUCTURE NO. 090-0182	F.A.P. RTE.	SECTION	COUNTY	TOTAL SHEETS	SHEET NO.
		CHECKED - ADM	REVISED -			VAR.	13 (HVB, HB-3) BR-1;R	TAZEWELL	1173	607
	PLOT SCALE = 10.666624 ' / in.	DRAWN - TJN	REVISED -					CONTRACT NO. 68C55		
	PLOT DATE = 6/6/2023	CHECKED - ADM	REVISED -		SHEET S-81 OF S-194 SHEETS		ILLINOIS FED. AID PROJECT			

MODEL: Default
FILE NAME: pw:\\mb-ic-pw.bentley.com:mb-ic-pw-03\Documents\Chicago_IL\01 Projects\179740 IDOT Cedar Site\ PhII\5.0 CADD\CAD_Sheets\0900182-68C55-081-S_Appr_Plan.dgn

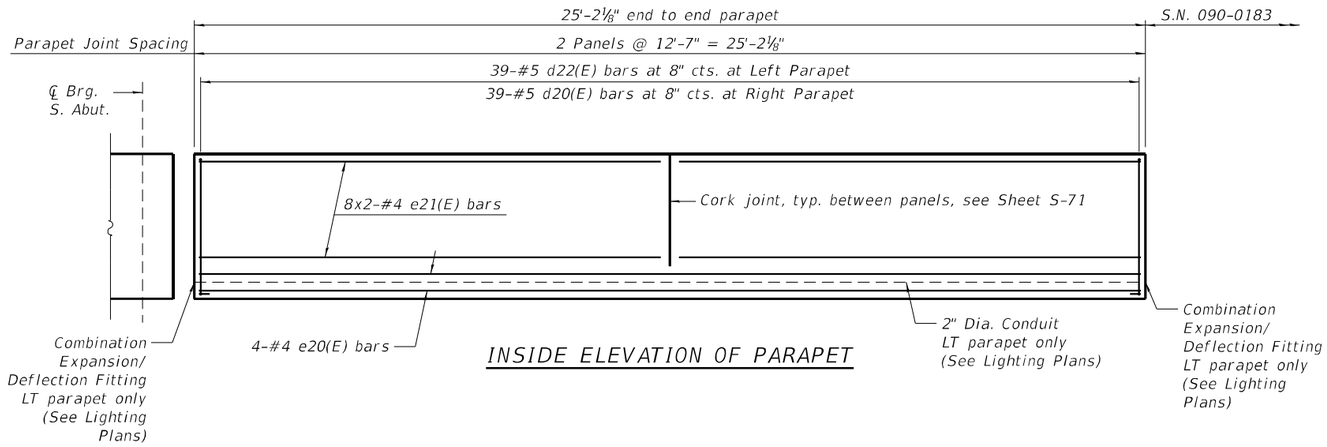

INSIDE ELEVATION OF PARAPET

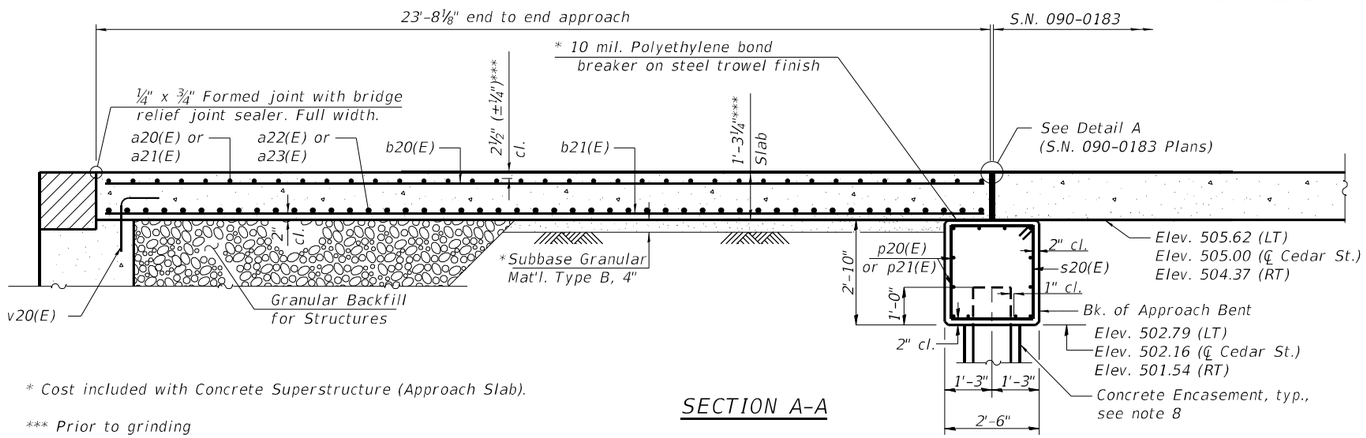

SECTION A-A

* Cost included with Concrete Superstructure (Approach Slab).

*** Prior to grinding

NOTES:

1. Parapet concrete shall be paid for as Concrete Superstructure.
2. Approach slab shall be paid for as Concrete Superstructure (Approach Slab).
3. Approach bent concrete shall be paid for as Concrete Structures.
4. Cost of excavation for approach bent included with Concrete Structures.
5. For Granular Backfill for Structures and drainage treatment details, see S-6.
6. For v20(E) bar details, see sheets S-153 and S-154.
7. Bars indicated thus 8x2-#4 ctc. indicates 8 lines of bars with 2 lengths per line.
8. For Concrete Encasement and pile details, see sheet S-178.

LEGEND

Paving block

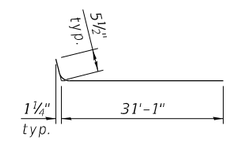

BAR a20(E)

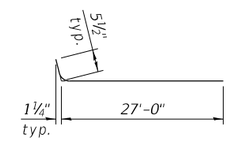

BAR a21(E)

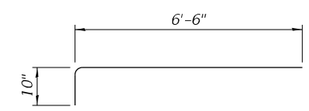

BAR a24(E)

SOUTH APPROACH BILL OF MATERIAL

Bar	No.	Size	Length	Shape
a20(E)	37	#5	31'-7"	
a21(E)	37	#5	27'-6"	
a22(E)	48	#8	33'-6"	
a23(E)	48	#8	28'-1"	
a24(E)	74	#5	7'-4"	
b20(E)	88	#5	23'-4"	
b21(E)	138	#9	23'-4"	
b22(E)	6	#5	24'-10"	
c20(E)	52	#5	1'-3"	
c21(E)	26	#5	3'-6"	
d20(E)	39	#5	7'-0"	
d21(E)	78	#5	8'-6"	
d22(E)	39	#5	7'-0"	
e20(E)	8	#4	24'-10"	
e21(E)	32	#4	12'-3"	
p20(E)	12	#6	31'-7"	
p21(E)	12	#6	26'-10"	
s20(E)	53	#5	10'-3"	
Concrete Structures			Cu. Yd.	14.2
Concrete Superstructure			Cu. Yd.	9.3
Concrete Encasement			Cu. Yd.	2.8
Protective Coat			Sq. Yd.	180
Concrete Superstructure (Approach Slab)			Cu. Yd.	63.5
Reinforcement Bars, Epoxy Coated			Pound	27430
Furnishing Steel Piles HP12x53			Foot	462
Driving Piles			Foot	462
Test Pile Steel HP12x53			Each	1
Diamond Grinding (Bridge Section)			Sq. Yd.	118
Bridge Deck Grooving (Longitudinal)			Sq. Yd.	90

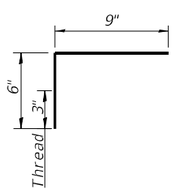

BAR c20(E)

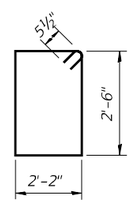

BAR s20(E)

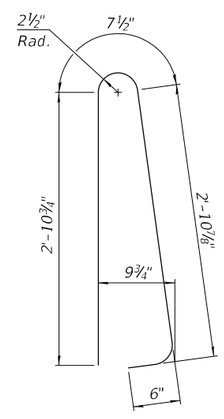

BAR d20(E)

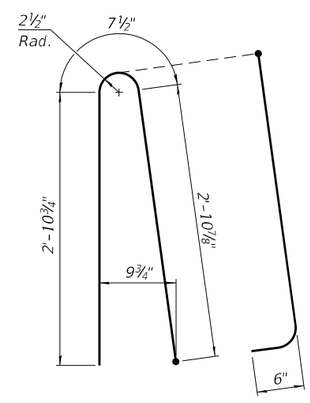

BAR d22(E)

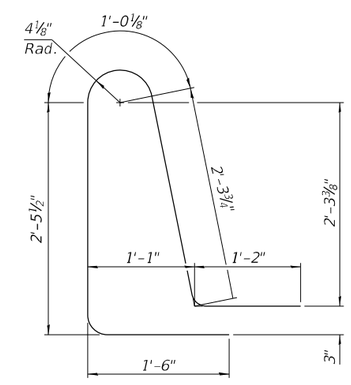

BAR d21(E)

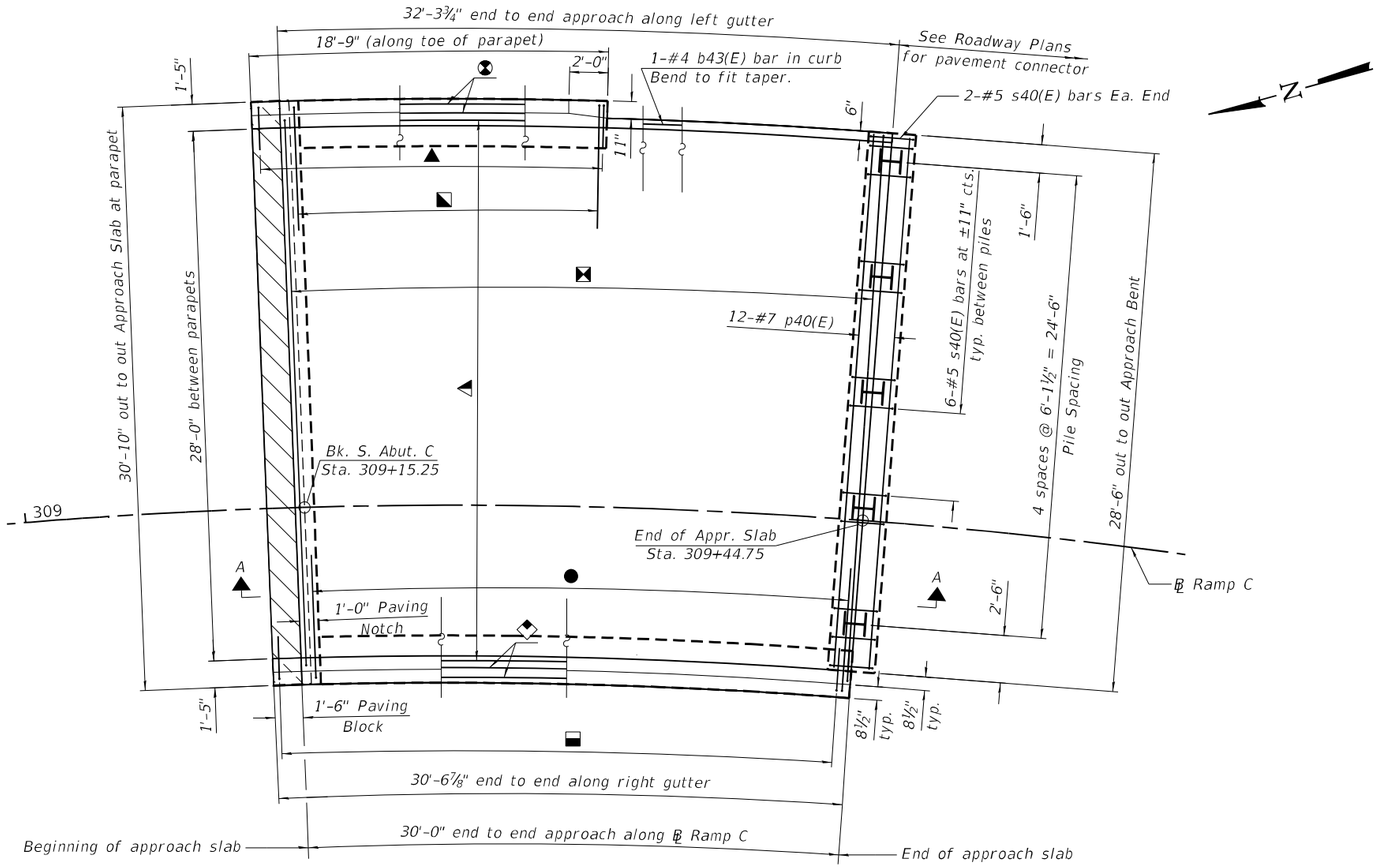

PLAN

NOTES:

1. See sheet S-84 for Section A-A
2. a40(E) and a41(E) bar spacings measured parallel to ℄ Ramp C
3. b40(E) and b41(E) bar spacings measured perpendicular to ℄ Ramp C
4. Provide Preformed Expansion Joint Filler according to Article 1051.09 of the Standard Specifications. Bond filler to wingwall with suitable adhesive as recommended by supplier. Cost included with Concrete Superstructure (Approach Slabs).

LEGEND:

- 49-#5 a40(E) bars at 8" cts. Top of slab, tilt as necessary to fit curb.
  65-#8 a41(E) bars at 6" cts. Bottom of slab.
- 2-#5 b42(E) bar top and bottom of slab.
- 2-#5 b44(E) bar top and bottom of slab.
- 44-#5 b40(E) bars at 8" cts. max., cut to fit. Top of slab
  69-#9 b41(E) bars at 5" cts. max., cut to fit. Bottom of slab
- 29-#5 d41(E) bars at 8" cts.
- 47-#5 d41(E) bars at 8" cts.
- 27-#5 a42(E) bars at 8" cts. Top of slab, typ. Lap with each a40(E) bar
- 49-#5 a42(E) bars at 8" cts. Top of slab, typ. Lap with each a40(E) bar
- Paving block

S. APPR. C PILE DATA:

Type: HP12x53
Nominal Required Bearing: 202 kips
Factored Resistance Available: 111 kips
Est. Length: 44 feet
No. Production Piles: 4
No. Test Piles: 1

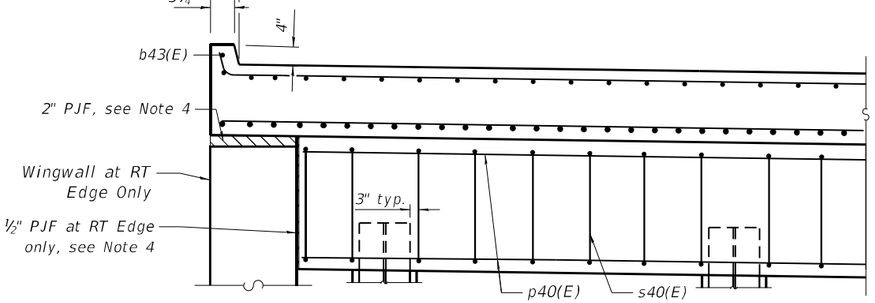

AT APPROACH BENT
Approach Slab Reinforcement Only Applicable to Left Edge

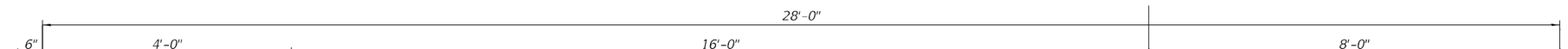

* Prior to grinding

CROSS SECTION
(Looking Upstation)
Approach Bent Reinforcement Applicable to
Both Left and Right Edge

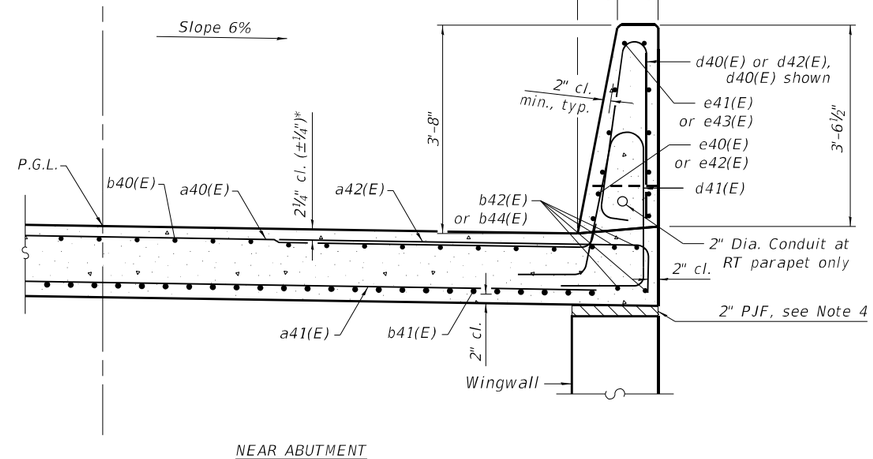

NEAR ABUTMENT
Approach Slab Reinforcement
also Applicable to Right Edge at Approach Bent

Michael Baker INTERNATIONAL 200 W Adams Street Suite 1800 Chicago, IL 60606 PH: 312.707.8770 FAX: 312.707.8804	USER NAME = DLamb	DESIGNED - CJB	REVISED -	STATE OF ILLINOIS DEPARTMENT OF TRANSPORTATION	SOUTH APPROACH C SLAB PLAN STRUCTURE NO. 090-0182	F.A.P. RTE.	SECTION	COUNTY	TOTAL SHEETS	SHEET NO.
		CHECKED - TJN	REVISED -			VAR.	13 (HVB, HB-3) 8R-1:R	TAZEWELL	1173	609
	PLOT SCALE = 7:11.9996 ':" / in.	DRAWN - CJB	REVISED -					CONTRACT NO. 68C55		
	PLOT DATE = 6/6/2023	CHECKED - TJN	REVISED -		SHEET S-83 OF S-194 SHEETS		ILLINOIS	FED. AID PROJECT		

MODEL: Default
FILE NAME: pw:\\mb-us-pw.bentley.com:mb-us-pw-03\Documents\Chicago IL\01 Projects\179740 IDOT Ceda/SIE+ Phll\5.0 CADD\CAD Sheets\0900182-68C55-083-SC_Appr Plan.dgn

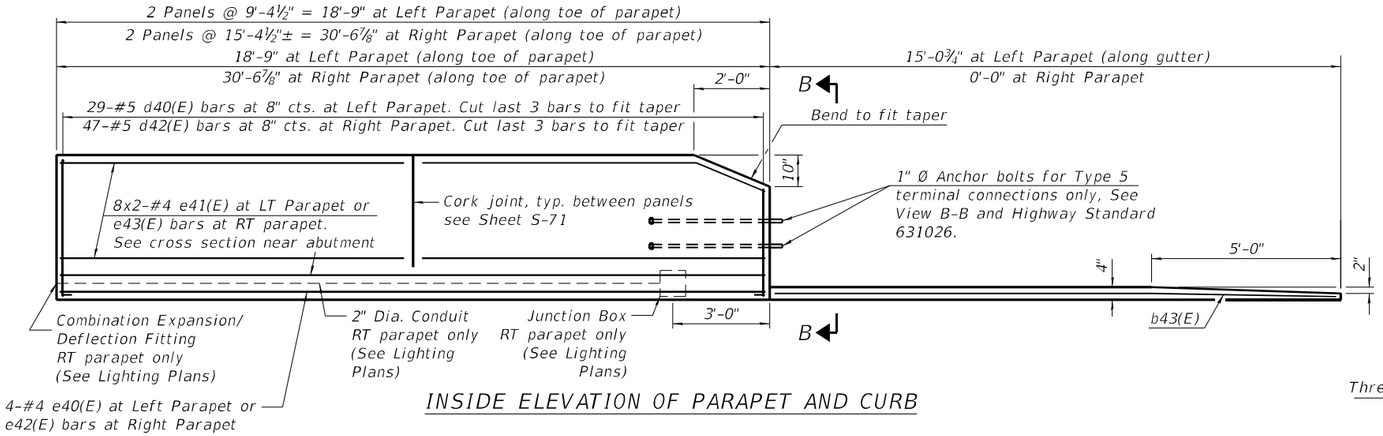

INSIDE ELEVATION OF PARAPET AND CURB

LEGEND:

Paving block

NOTES:

1. Approach slab shall be paid for as Concrete Superstructure (Approach Slab).
2. Approach bent concrete shall be paid for as Concrete Structures.
3. Cost of excavation for approach bent included with Concrete Structures.
4. For Granular Backfill for Structures and drainage treatment details, see sheet S-6.
5. For v40(E) bar details, see sheets S-156 and S-157.
6. Bars indicated thus 8x2-#4 ctc. indicates 8 lines of bars with 2 lengths per line.
7. Parapet concrete shall be paid for as Concrete Superstructure.
8. For Concrete Encasement and pile details, see sheet S-178.

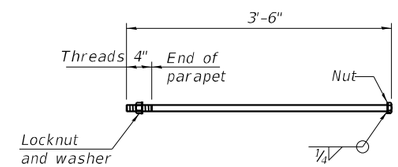

*1" Ø ANCHOR BOLT

(Anchor bolt assemblies shall be galvanized according to Article 1006.09 of the Standard Specifications)

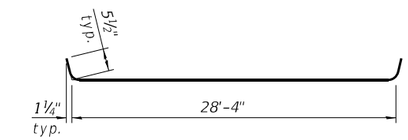

BAR a40(E)

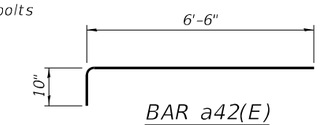

BAR a42(E)

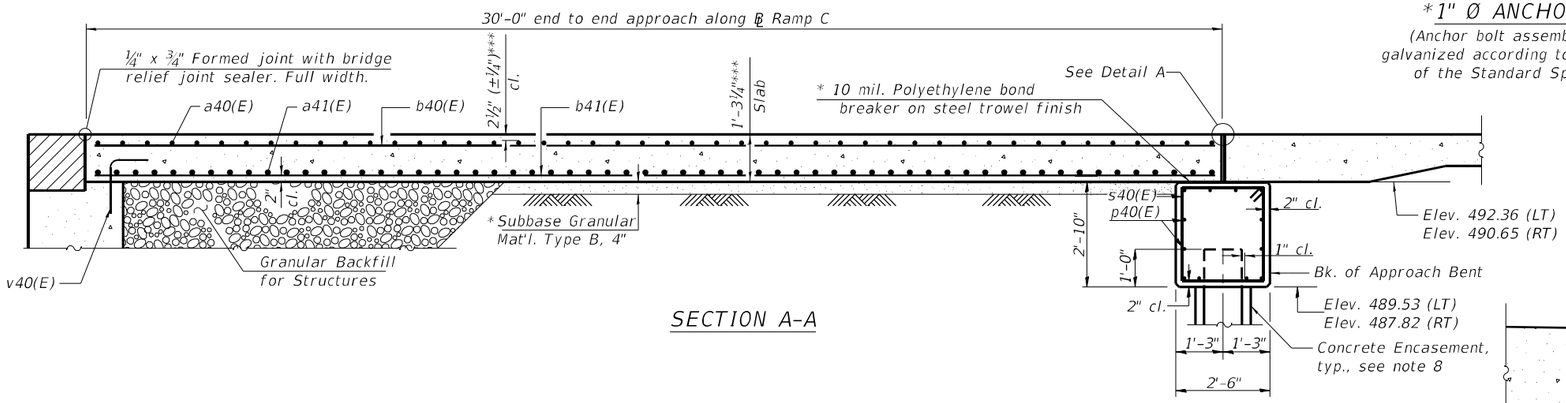

SECTION A-A

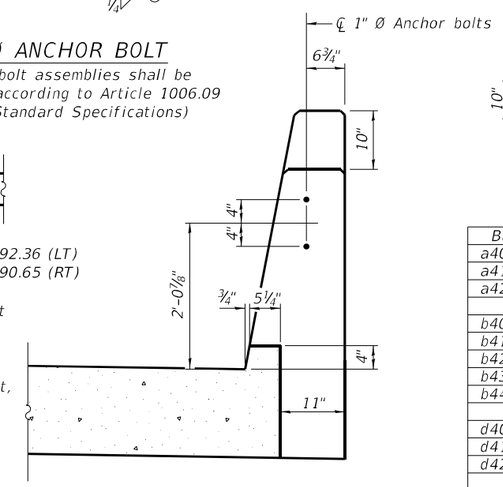

VIEW B-B

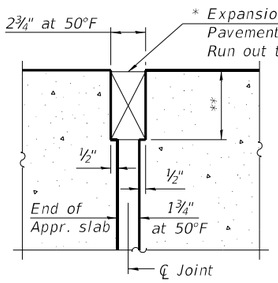

DETAIL A

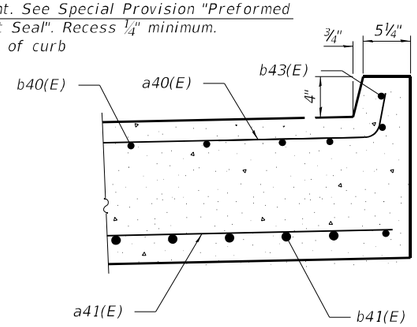

SECTION B-B

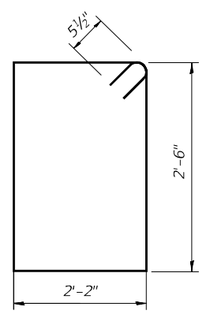

BAR s40(E)

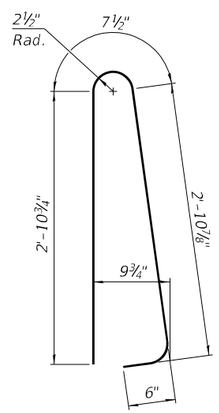

BAR d40(E)

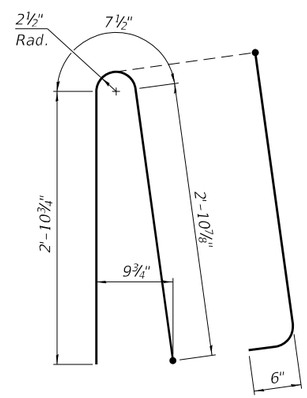

BAR d42(E)

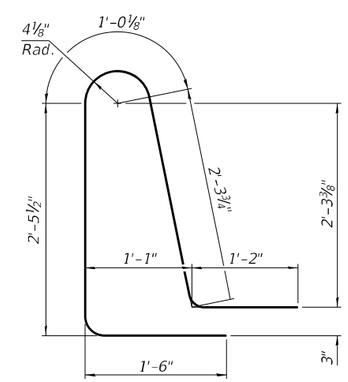

BAR d41(E)

* Cost included with Concrete Superstructure (Approach Slab).

** Per manufacturer recommendations

*** Prior to grinding

SOUTH APPROACH C BILL OF MATERIAL

Bar	No.	Size	Length	Shape
a40(E)	49	#5	29'-2"	
a41(E)	65	#8	28'-4"	
a42(E)	76	#5	7'-4"	
b40(E)	44	#5	31'-11"	
b41(E)	69	#9	31'-11"	
b42(E)	4	#5	17'-0"	
b43(E)	1	#4	14'-9"	
b44(E)	4	#4	28'-9"	
d40(E)	29	#5	7'-0"	
d41(E)	76	#5	8'-6"	
d42(E)	47	#5	7'-0"	
e40(E)	4	#4	18'-6"	
e41(E)	16	#4	9'-1"	
e42(E)	4	#4	30'-3"	
e43(E)	16	#4	15'-0"	
p40(E)	12	#6	28'-2"	
s40(E)	28	#5	10'-3"	
Concrete Structures			Cu. Yd.	7.5
Concrete Superstructure			Cu. Yd.	7.2
Concrete Encasement			Cu. Yd.	1.8
Protective Coat			Sq. Yd.	126
Concrete Superstructure (Approach Slab)			Cu. Yd.	44.0
Reinforcement Bars, Epoxy Coated			Pound	18,530
Furnishing Steel Piles HP12x53			Foot	176
Driving Piles			Foot	176
Test Pile Steel HP12x53			Each	1
* Diamond Grinding (Bridge Section)			Sq. Yd.	359
Bridge Deck Grooving (Longitudinal)			Sq. Yd.	58

* Includes 100 ft of pavement adjacent to approach, see special provision for Diamond Grinding and Surface Testing Bridge Section.

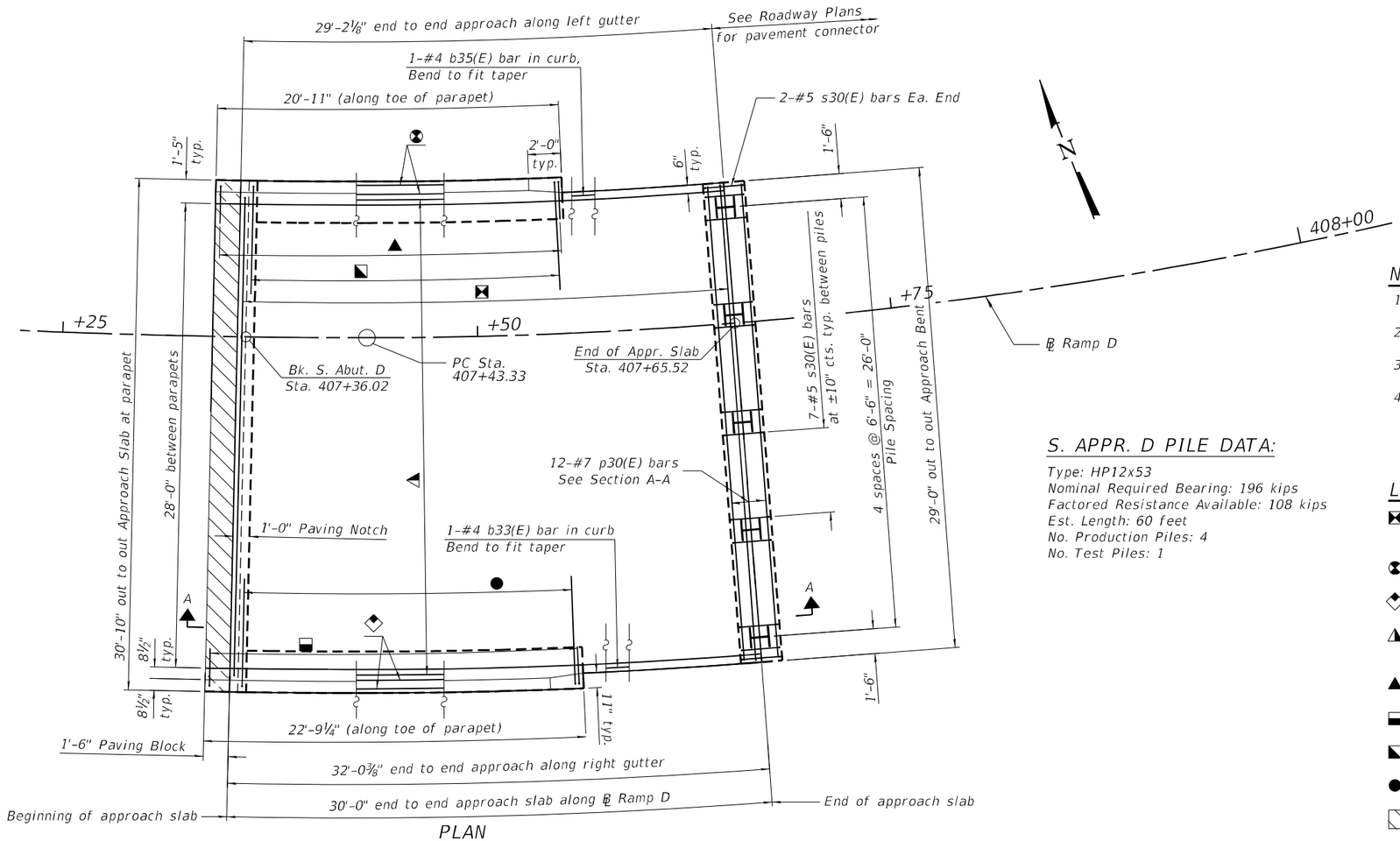

PLAN

S. APPR. D PILE DATA:

Type: HP12x53
Nominal Required Bearing: 196 kips
Factored Resistance Available: 108 kips
Est. Length: 60 feet
No. Production Piles: 4
No. Test Piles: 1

NOTES:

1. See sheet S-86 for Section A-A
2. a30(E) and a31(E) bar spacings measured parallel to ℄ Ramp D
3. b30(E) and b31(E) bar spacings measured perpendicular to ℄ Ramp D
4. Provide Preformed Expansion Joint Filler according to Article 1051.09 of the Standard Specifications. Bond filler to wingwall with suitable adhesive as recommended by supplier. Cost included with Concrete Superstructure (Approach Slabs).

LEGEND:

- 49-#5 a30(E) bars at 8" cts. Top of slab, tilt as necessary to fit curb. 65-#8 a31(E) bars at 6" cts. Bottom of slab.
- 2-#5 b32(E) bars top and bottom of slab.
- 2-#5 b34(E) bars top and bottom of slab.
- 44-#5 b30(E) bars at 8" cts. max., cut to fit. Top of slab 69-#9 b31(E) bars at 5" cts. max., cut to fit. Bottom of slab
- 32-#5 d31(E) bars at 8" cts.
- 35-#5 d31(E) bars at 8" cts.
- 33-#5 a32(E) bars at 8" cts. Top of slab, typ. Lap with each a30(E) bar
- 33-#5 a32(E) bars at 8" cts. Top of slab, typ. Lap with each a30(E) bar
- Paving block

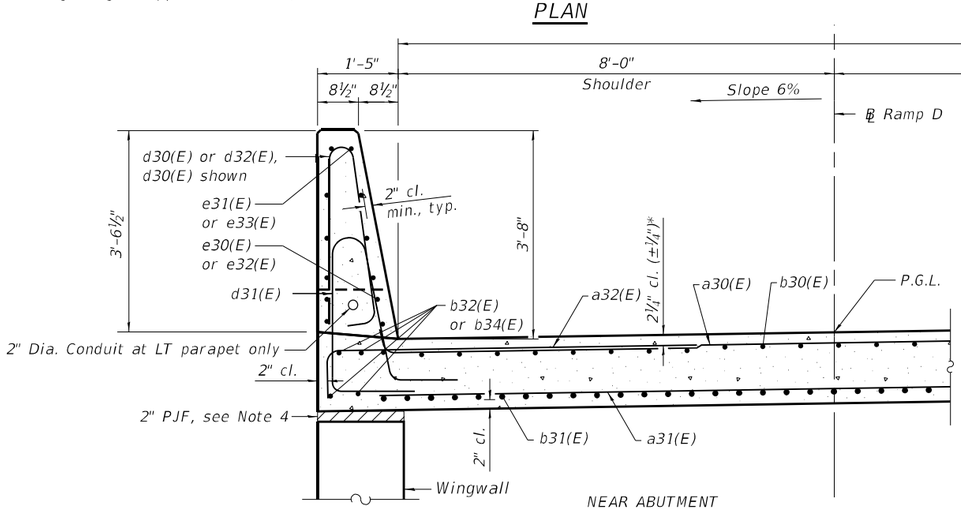

NEAR ABUTMENT

* Prior to grinding

CROSS SECTION
(Looking Upstation)

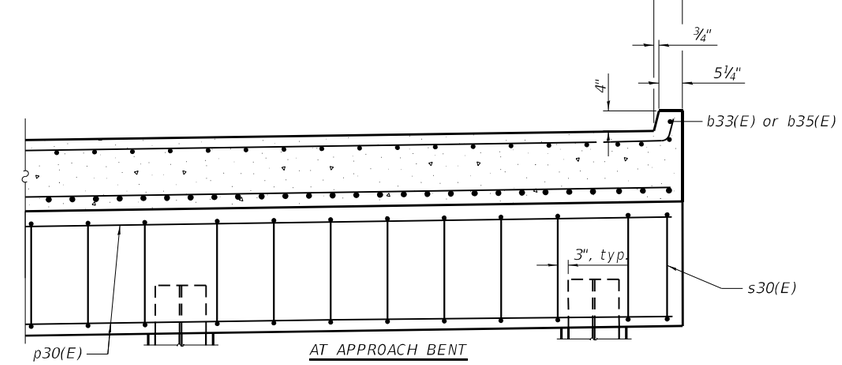

AT APPROACH BENT

Michael Baker INTERNATIONAL
200 W Adams Street
Suite 1800
Chicago, IL 60606
PH: 312.707.8772
FAX: 312.707.8804

USER NAME = DLamb	DESIGNED - CJB	REVISED -	
	CHECKED - TJN	REVISED -	
PLOT SCALE = 7:11.9996 ':" / in.	DRAWN - CJB	REVISED -	
PLOT DATE = 6/6/2023	CHECKED - TJN	REVISED -	

STATE OF ILLINOIS
DEPARTMENT OF TRANSPORTATION

SOUTH APPROACH D SLAB PLAN
STRUCTURE NO. 090-0182

SHEET S-85 OF S-194 SHEETS

F.A.P. RTE.	SECTION	COUNTY	TOTAL SHEETS	SHEET NO.
VAR.	13 (HVB, HB-3) BR-1;R	TAZEWELL	1173	611
		CONTRACT NO. 68C55		
	ILLINOIS	FED. AID PROJECT		

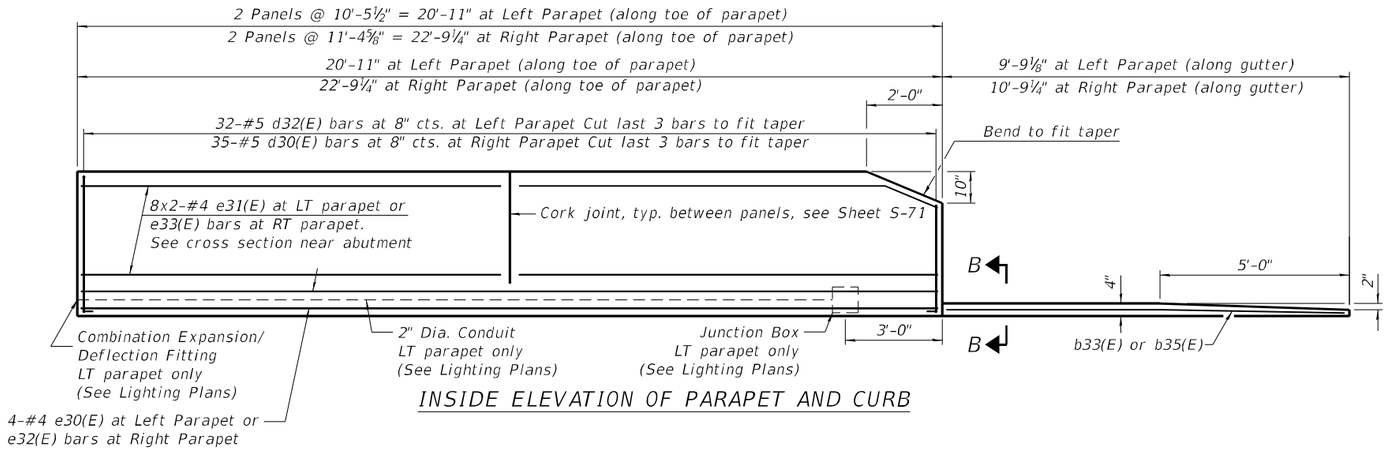

INSIDE ELEVATION OF PARAPET AND CURB

NOTES:

1. Approach slab shall be paid for as Concrete Superstructure (Approach Slab).
2. Approach bent concrete shall be paid for as Concrete Structures.
3. Cost of excavation for approach bent included with Concrete Structures.
4. For Granular Backfill for Structures and drainage treatment details, see sheet S-6.
5. For v30(E) bar details, see sheets S-159 and S-160.
6. Bars indicated thus 8x2-#4 ctc. indicates 8 lines of bars with 2 lengths per line.
7. Parapet concrete shall be paid for as Concrete Superstructure.
8. For Type 6 terminal connections see Highway Standard 631031.
9. For Concrete Encasement and pile details, see sheet S-178.

LEGEND:

Paving block

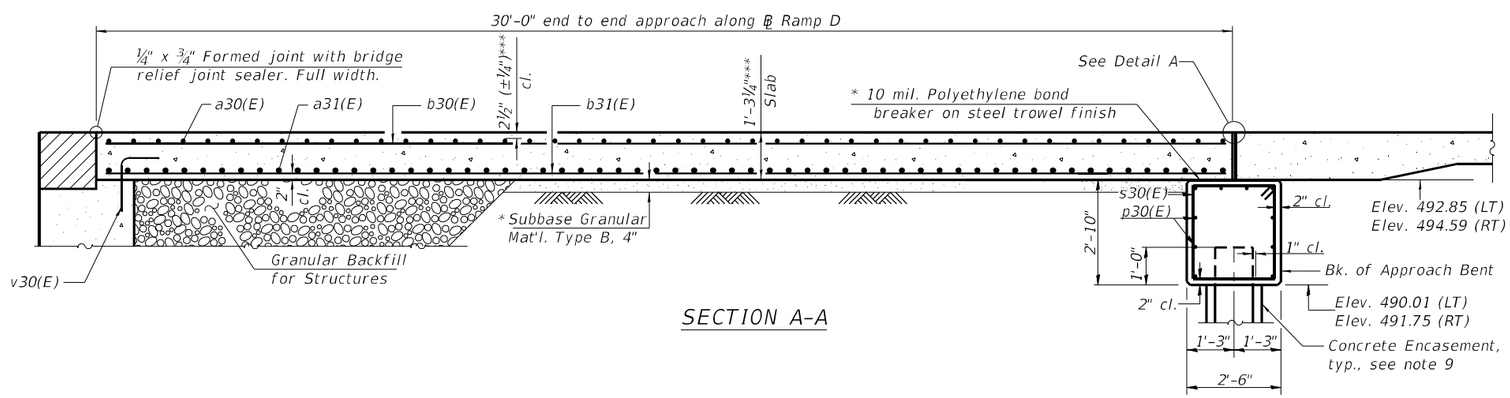

SECTION A-A

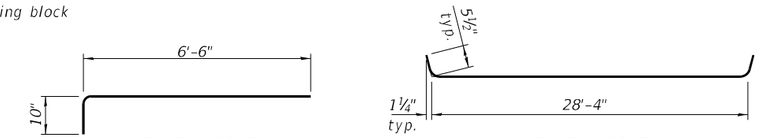

BAR a32(E) BAR a30(E)

SOUTH APPROACH D BILL OF MATERIAL

Bar	No.	Size	Length	Shape
a30(E)	49	#5	29'-2"	
a31(E)	65	#8	28'-4"	
a32(E)	66	#5	7'-4"	
b30(E)	44	#5	31'-7"	
b31(E)	69	#9	31'-7"	
b32(E)	4	#5	19'-1"	
b33(E)	1	#4	10'-5"	
b34(E)	4	#4	21'-0"	
b35(E)	1	#4	9'-6"	
d30(E)	35	#5	7'-0"	
d31(E)	67	#5	8'-6"	
d32(E)	32	#5	7'-0"	
e30(E)	4	#4	20'-7"	
e31(E)	16	#4	10'-1"	
e32(E)	4	#4	22'-6"	
e33(E)	16	#4	11'-1"	
p30(E)	12	#6	28'-8"	
s30(E)	32	#5	10'-3"	
Concrete Structures			Cu. Yd.	7.7
Concrete Superstructure			Cu. Yd.	6.4
Concrete Encasement			Cu. Yd.	1.8
Protective Coat			Sq. Yd.	124
Concrete Superstructure (Approach Slab)			Cu. Yd.	43.8
Reinforcement Bars, Epoxy Coated			Pound	18,210
Furnishing Steel Piles HP12x53			Foot	240
Driving Piles			Foot	240
Test Pile Steel HP12x53			Each	1
* Diamond Grinding (Bridge Section)			Sq. Yd.	359
Bridge Deck Grooving (Longitudinal)			Sq. Yd.	58

* Includes 100 ft of pavement adjacent to approach, see special provision for Diamond Grinding and Surface Testing Bridge Section.

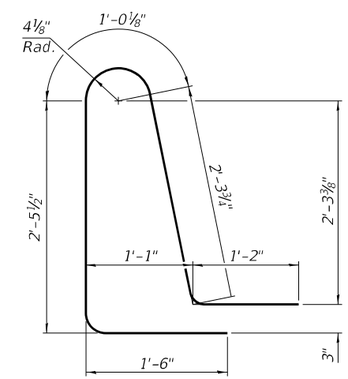

BAR d31(E)

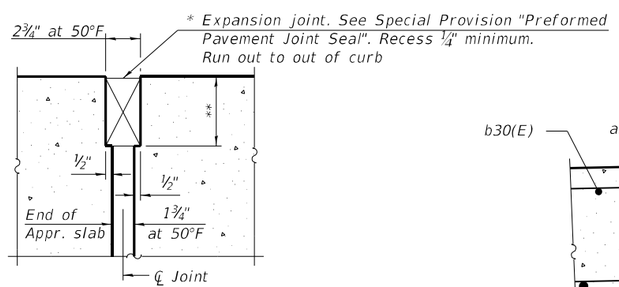

DETAIL A

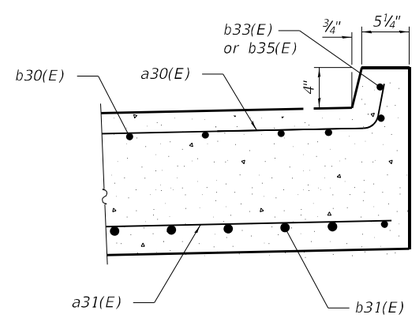

SECTION B-B

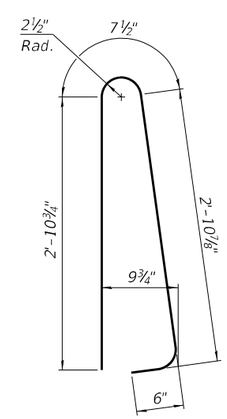

BAR d30(E)

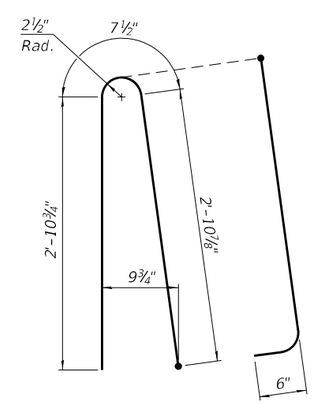

BAR d32(E)

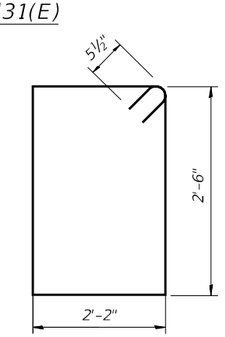

BAR s10(E)

* Cost included with Concrete Superstructure (Approach Slab).

** Per manufacturer recommendations

*** Prior to grinding

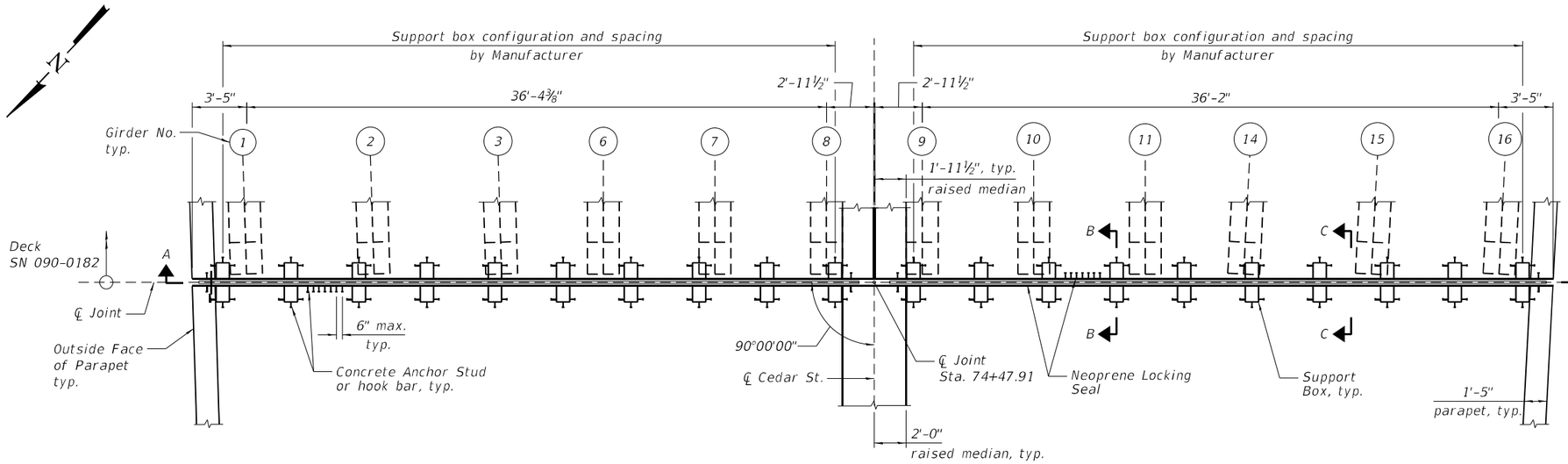

PLAN

(Concrete anchor studs or hooked bars not shown for clarity)

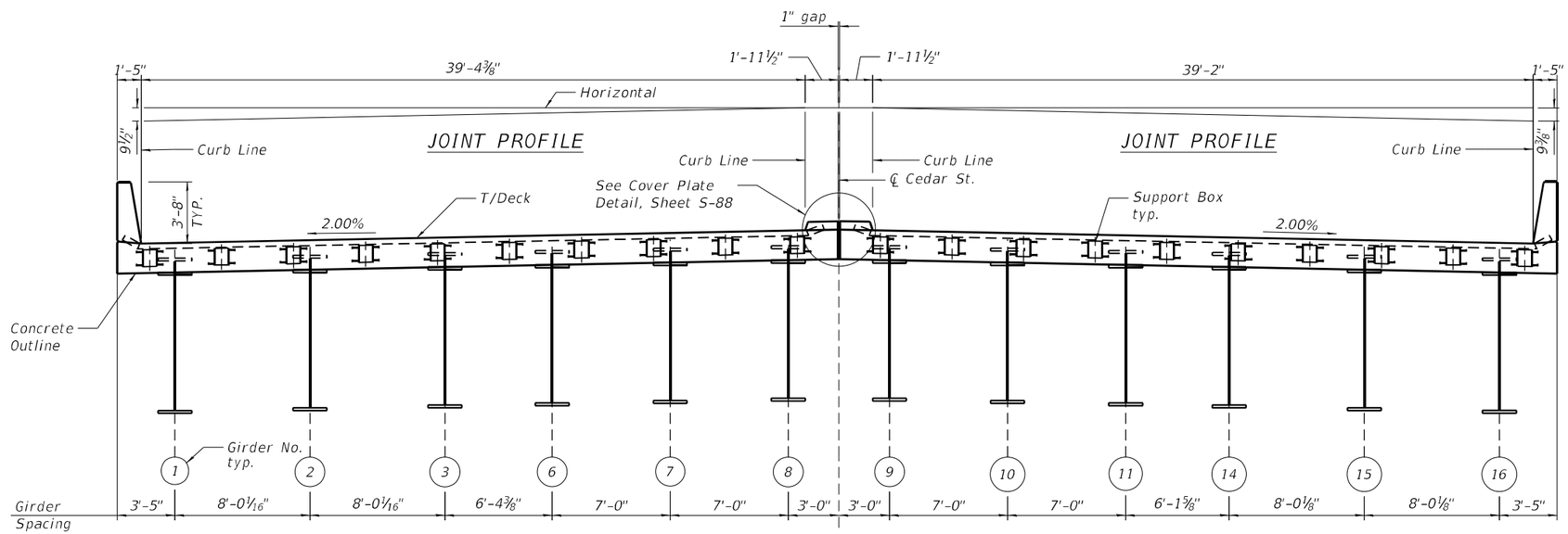

SECTION A-A

GENERAL NOTES:

1. Modular expansion joint shall be designed accoding to Section 14 of 2020 AASHTO specifications for HL-93 truck loading with impact and the Special Provision.
2. The joint shall be a shop-fabricated modular assembly with multiple support bars, edge and separation beams and transverse neoprene seals, providing a continuous seal across the deck.
3. Joint shall be fabricated and installed according to the manufacturer's recommendations and as specified in the special provision for a modular joint system and as approved by the Engineer.
4. Joint shall be fabricated to conform to the roadway profile and cross-slopes.
5. All exposed structural steel elements such as separation beams, edge beams, support bars, sliding plate assemblies and cover plates shall be fabricated with AASHTO M270 Grade 50 steel.
6. Modular expansion joints shall be shipped in one piece unless noted.
7. Concrete anchor studs attached to the modular expansion joint shall conform to the requirements of Article 1006.32 of the Standard Specifications. The cost of the Concrete Anchor Studs shall be included with Modular Expansion Joint Pay Items.
8. No aluminum components shall be allowed.
9. All splices of center beams and edge beams located in the roadway shall be full penetration welds. (Upturn splices may be partial penetration welds)
10. See deck reinforcement plan sheet for bar size, designation and blockout dimensions.
11. The modular expansion joint system shall be limited to pre-approved systems as indicated in special provision for Modular Expansion Joint. The joint shall provide the movement as shown in Table A.
12. For Sections B-B, C-C, F-F, and G-G, see sheet S-91.
13. Modular expansion joints shall be assembled in thier final relative position with the ends in place for shop inspection and acceptance.
14. Dimensions are measured along ℄ of Joint.
15. Prior to placement of the joint blockout, the Contractor shall refer to the joint shop drawings for support box and stud layout and shall coordinate with the Modular Joint Manufacturer to ensure that the joint will be properly supported prior to casting the concrete blockout and that the reinforcement bars will not interfere with the joint components. Any neccessary adjustments to the reinforcement layout including cutting of bars shall be submitted to the Engineer for approval.
16. Steel sliding plates and associated steel components shall be hot dip galvanized.

TABLE A

Location	Longitudinal Movement	Joint Size
North Abutment	5⅜"	6"

BILL OF MATERIAL

Item	Unit	Total
Modular Expansion Joint, 6"	Foot	86

Michael Baker INTERNATIONAL
200 W Adams Street
Suite 1800
Chicago, IL 60606
P:+1 312.707.8770
FAX: 312.707.8804

USER NAME = DLamb	DESIGNED - AMR	REVISED -	
	CHECKED - JTB	REVISED -	
PLOT SCALE = 0:2.0000 ':" / in.	DRAWN - DMJ	REVISED -	
PLOT DATE = 6/6/2023	CHECKED - JTB	REVISED -	

STATE OF ILLINOIS
DEPARTMENT OF TRANSPORTATION

MODULAR EXPANSION JOINT – NORTH ABUTMENT
STRUCTURE NO. 090–0182

SHEET S-87 OF S-194 SHEETS

F.A.P. RTE.	SECTION	COUNTY	TOTAL SHEETS	SHEET NO.
VAR.	13 (HVB, HB-3) 8R-1;R	TAZEWELL	1173	613
		CONTRACT NO. 68C55		
	ILLINOIS	FED. AID PROJECT		

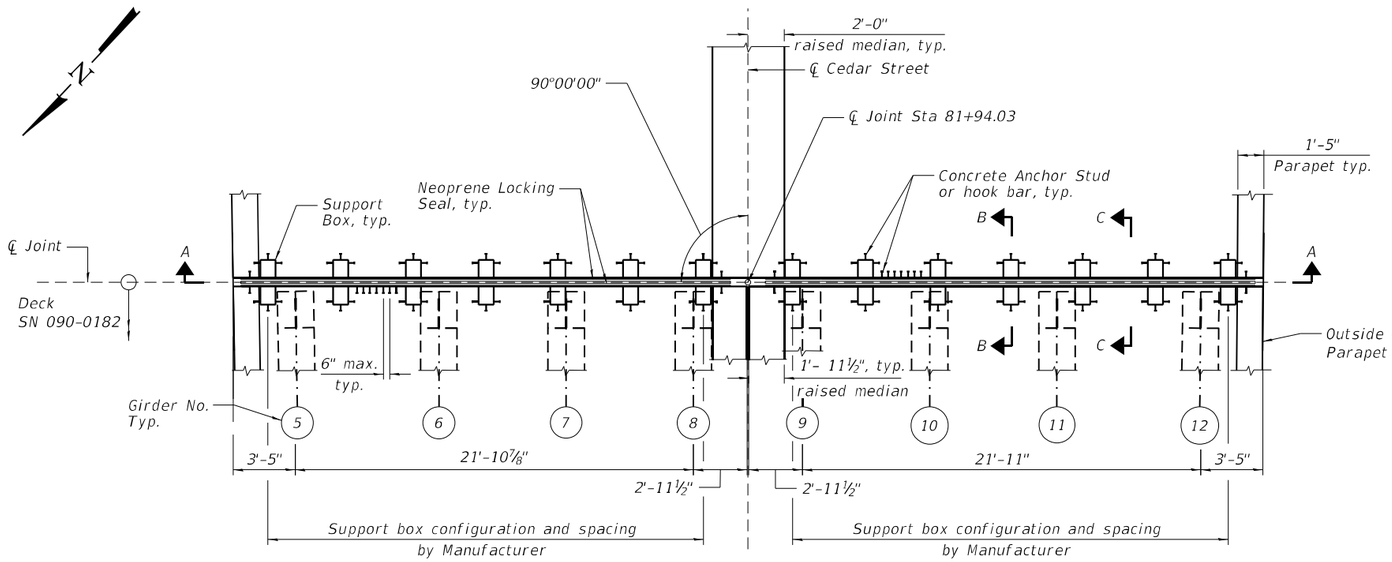

PLAN

(Concrete anchor studs or hooked bars not shown for clarity)

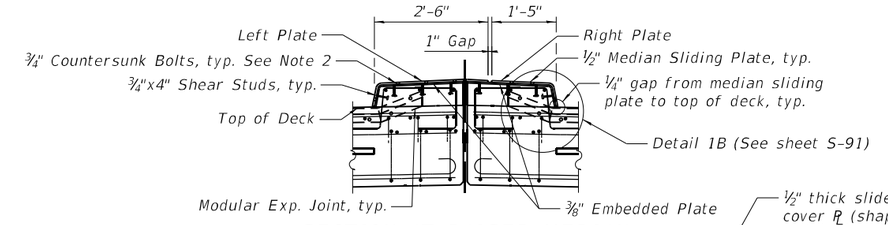

SECTION AT RAISED MEDIAN

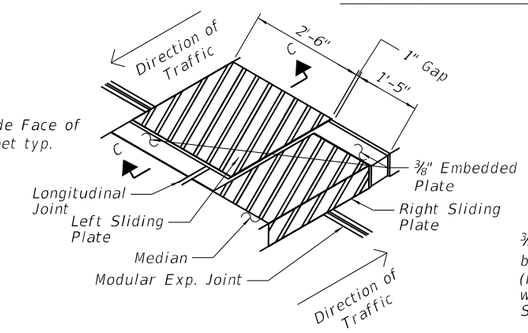

TRIMETRIC VIEW

(Shape to match flush with raised median)

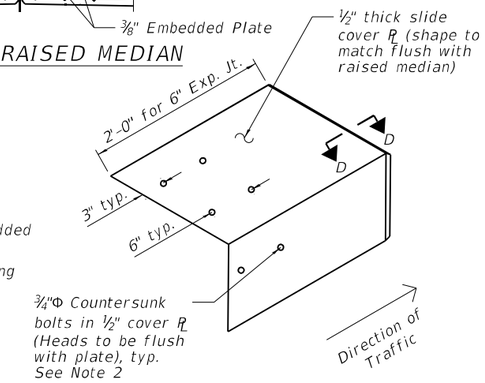

STEEL SLIDING MEDIAN PLATE

(Right Plate View)

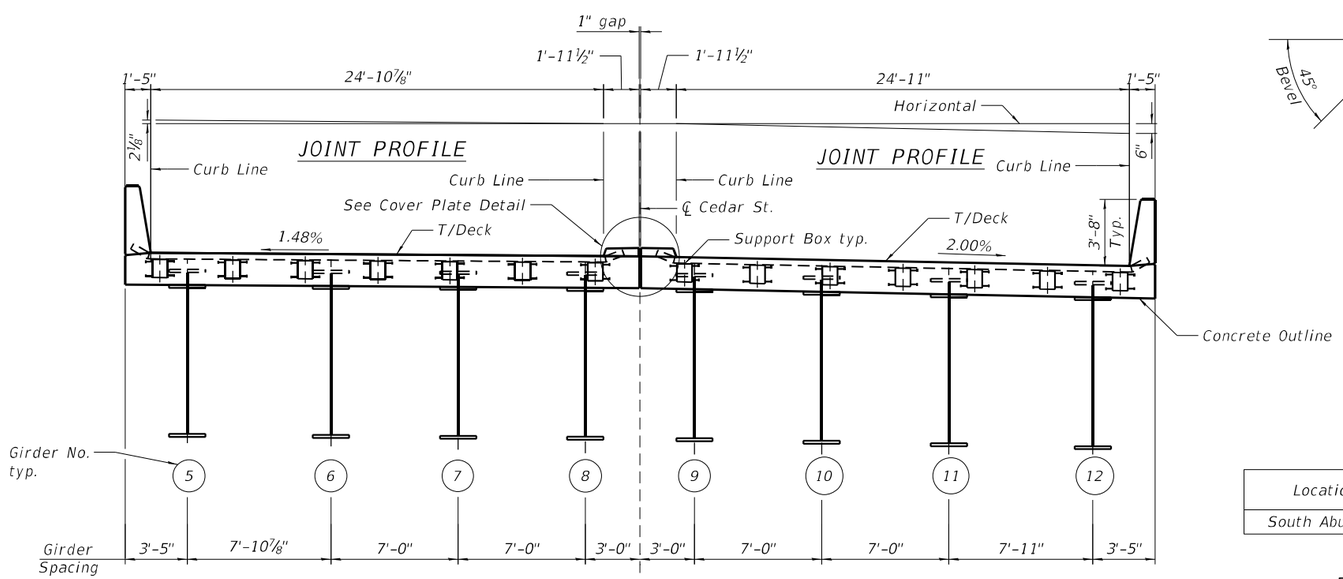

SECTION A-A

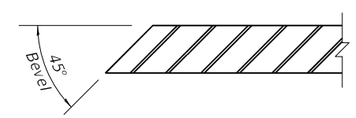

SECTION D-D

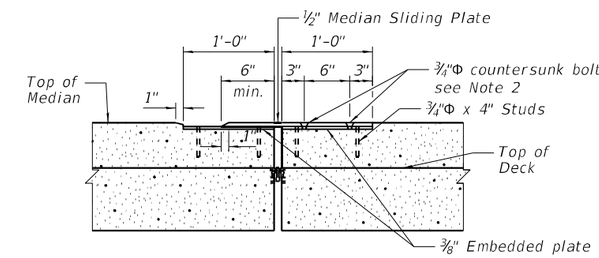

SECTION C-C

COVER PLATE DETAIL

(Not to scale)

TABLE A

Location	Longitudinal Movement	Joint Size
South Abutment	4⅝"	6"

BILL OF MATERIAL

Item	Unit	Total
Modular Expansion Joint, 6"	Foot	57

GENERAL NOTES:

1. For General Notes, see sheet S-87.
2. All threads of bolts in assembly of Steel Sliding Median Plate shall be coated with a non-lead based anti-seize compound, similar to lead plate, prior to assembly.
3. Steel sliding plates and asssociated steel components shall be hot dip galvanized.

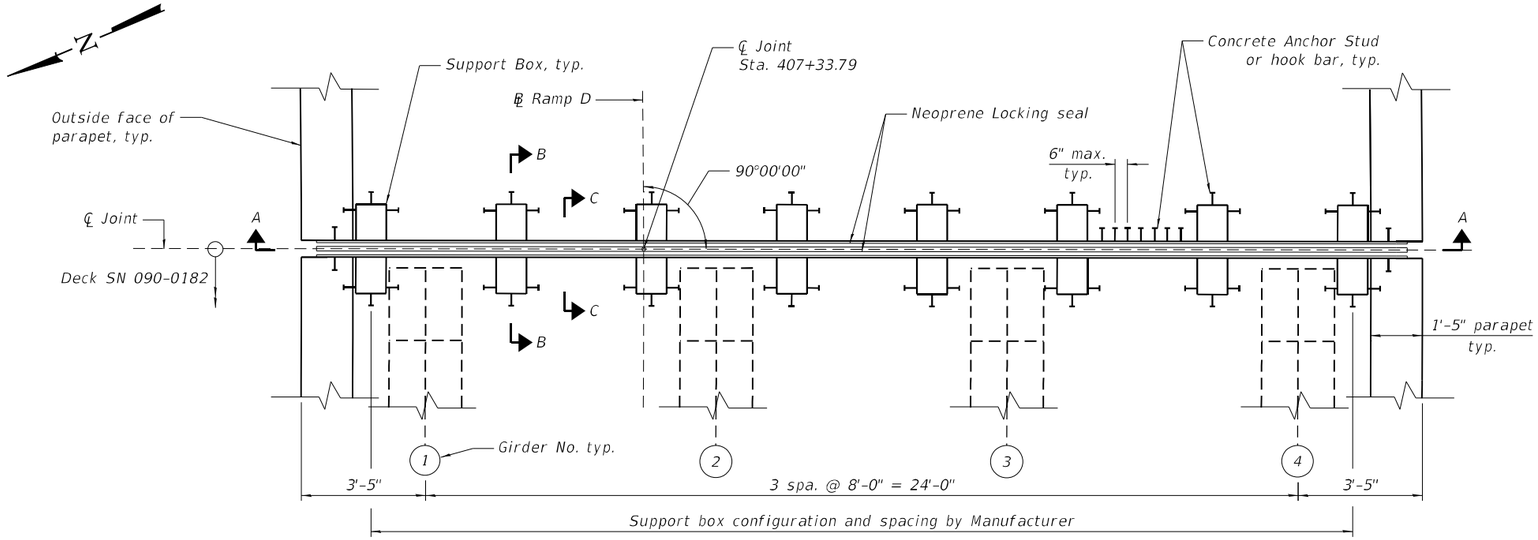

PLAN

(Concrete anchor studs or hooked bars not shown for clarity)

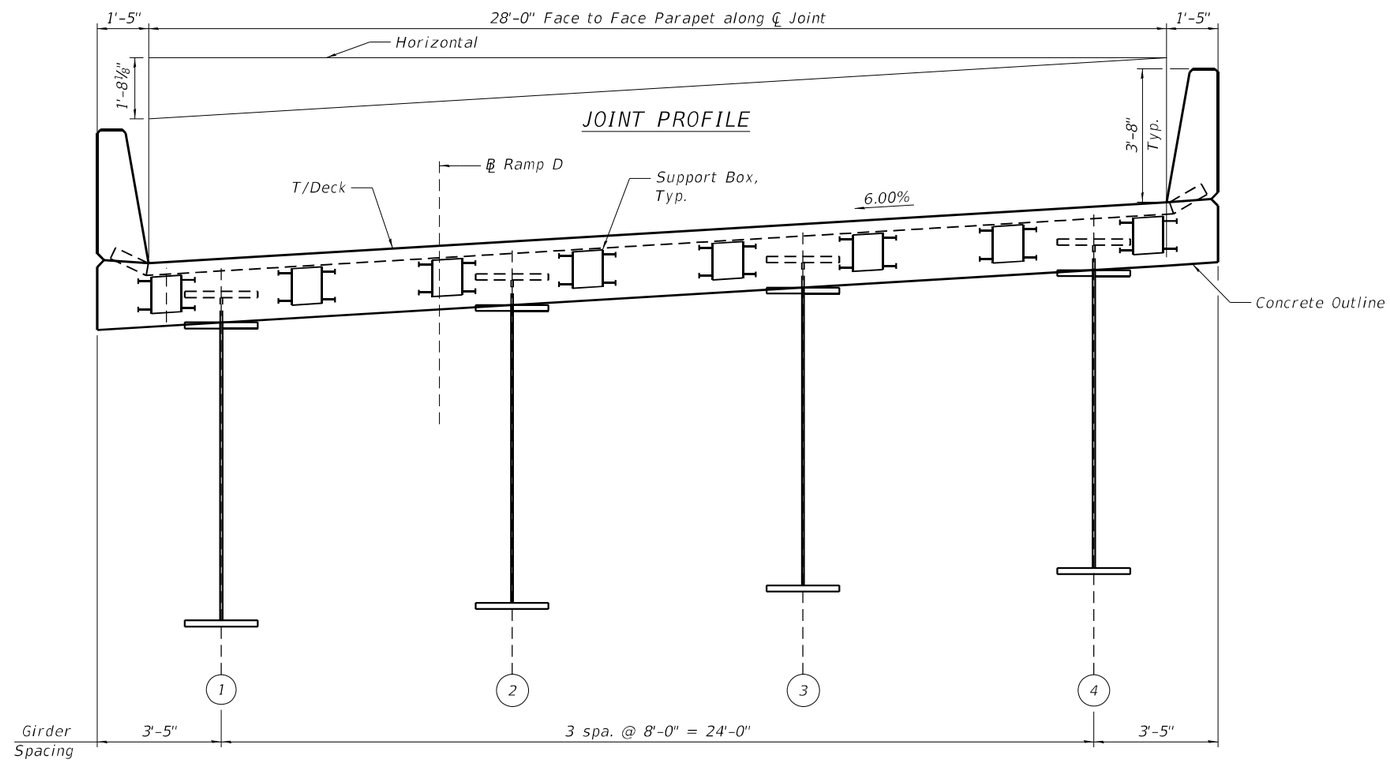

SECTION A-A

TABLE A

Location	Longitudinal Movement	Joint Size
S Abut. D	4 5/8"	6"

BILL OF MATERIAL

Item	Unit	Total
Modular Expansion Joint, 6"	Foot	31

GENERAL NOTES:

1. For General Notes, see sheet S-87.

Michael Baker INTERNATIONAL
200 W Adams Street
Suite 1850
Chicago, IL 60606
PH: 312.707.8770
FAX: 312.707.8804

USER NAME = DLamb	DESIGNED - AMR	REVISED -	
	CHECKED - JTB	REVISED -	
PLOT SCALE = 0:2.0000 ':" / in.	DRAWN - DMJ	REVISED -	
PLOT DATE = 6/6/2023	CHECKED - JTB	REVISED -	

STATE OF ILLINOIS
DEPARTMENT OF TRANSPORTATION

MODULAR EXPANSION JOINT – SOUTH ABUTMENT D
STRUCTURE NO. 090–0182

SHEET S-89 OF S-194 SHEETS

F.A.P. RTE.	SECTION	COUNTY	TOTAL SHEETS	SHEET NO.
VAR.	13 (HVB, HB-3) BR-1;R	TAZEWELL	1173	615
		CONTRACT NO. 68C55		
		ILLINOIS	FED. AID PROJECT	

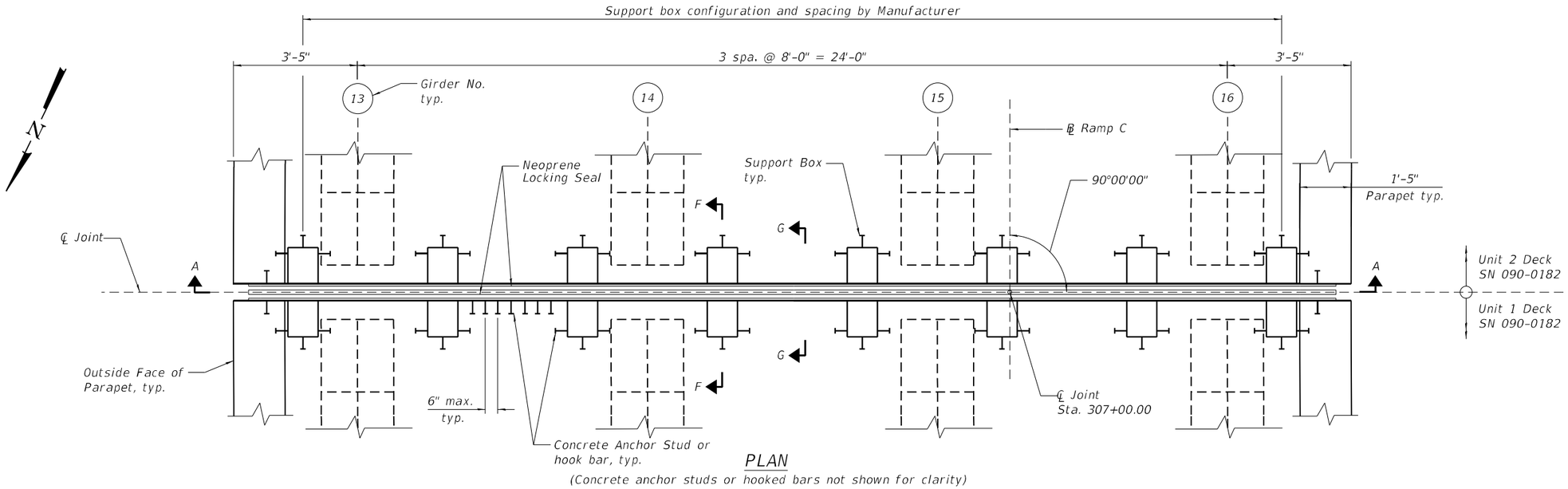

PLAN

(Concrete anchor studs or hooked bars not shown for clarity)

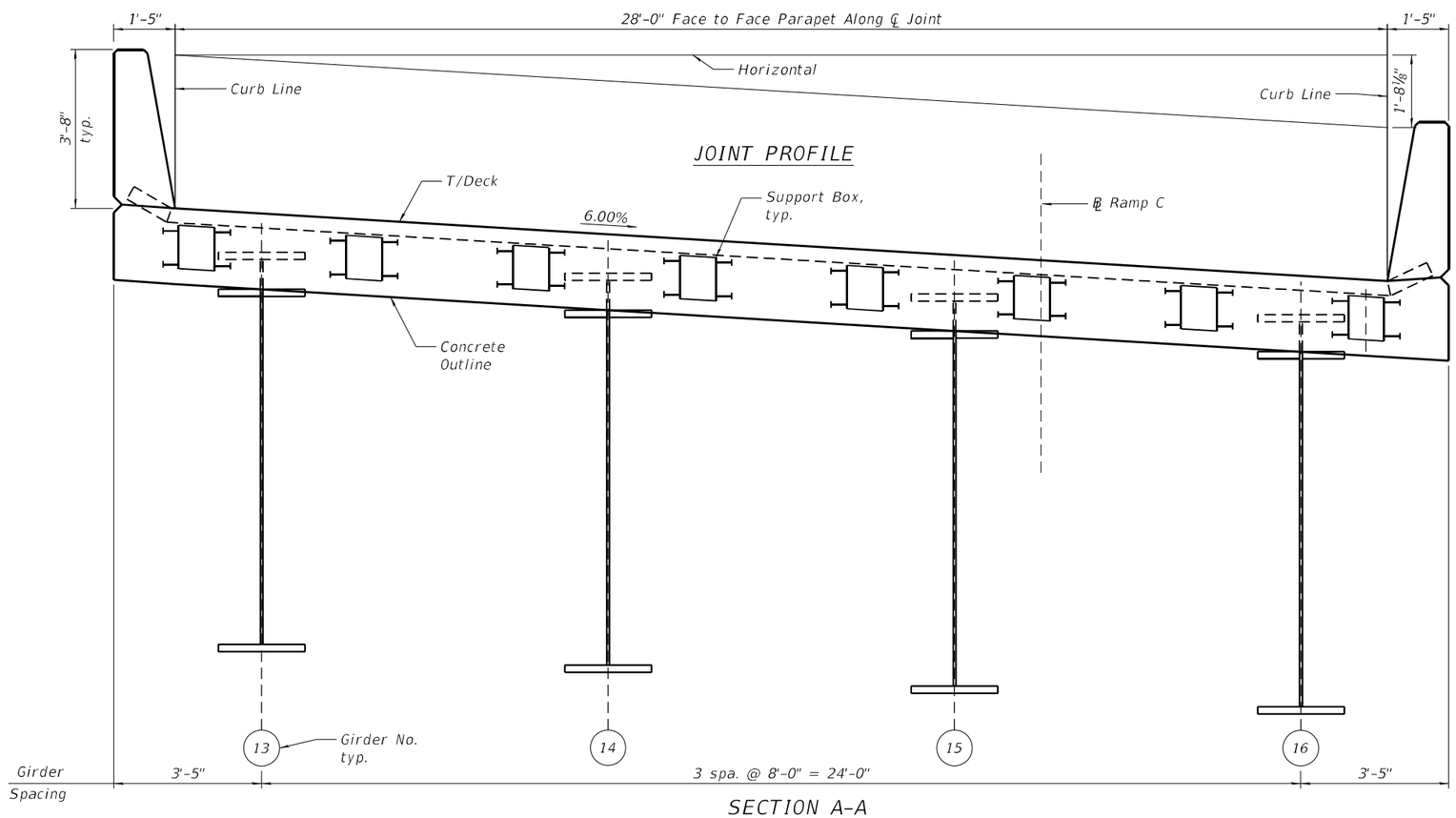

SECTION A-A

TABLE A

Location	Longitudinal Movement	Joint Size
Pier 3C	4 1/8"	6"

BILL OF MATERIAL

Item	Unit	Total
Modular Expansion Joint, 6"	Foot	31

GENERAL NOTES:

1. For General Notes, see sheet S-87

MODEL: Default
FILE NAME: pw:\\ms-ipw.bentley.com:ms-ipw-03\Documents\Chicago_IL\01 Projects\179740 IDOT Cedar\SEx1 PH15.0 CADD\CAD Sheets\090\182-68C55-090-EX017.dgn

Michael Baker INTERNATIONAL
200 W Adams Street
Suite 1800
Chicago, IL 60606
PH: 312.707.8770
FAX: 312.707.8804

USER NAME = DLamb	DESIGNED - AMR	REVISED -
	CHECKED - JTB	REVISED -
PLOT SCALE = 0:2.0000 ':" / in.	DRAWN - DMJ	REVISED -
PLOT DATE = 8/6/2023	CHECKED - JTB	REVISED -

STATE OF ILLINOIS
DEPARTMENT OF TRANSPORTATION

MODULAR EXPANSION JOINT – PIER 3C
STRUCTURE NO. 090–0182

SHEET S-90 OF S-194 SHEETS

F.A.P. RTE.	SECTION	COUNTY	TOTAL SHEETS	SHEET NO.
VAR.	13 (HVB, HB-3) BR-1;R	TAZEWELL	1173	616
		CONTRACT NO. 68C55		
		ILLINOIS FED. AID PROJECT		

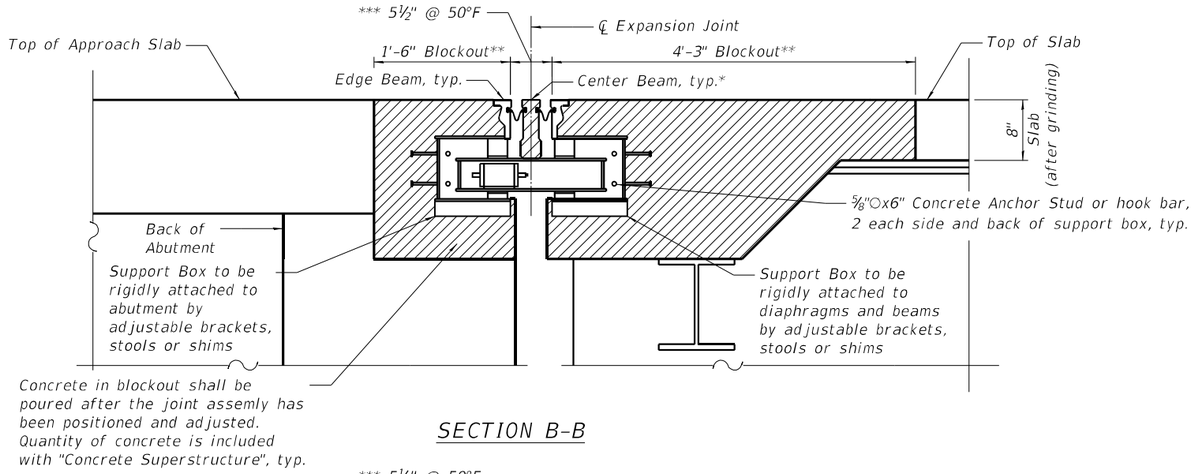

SECTION B-B

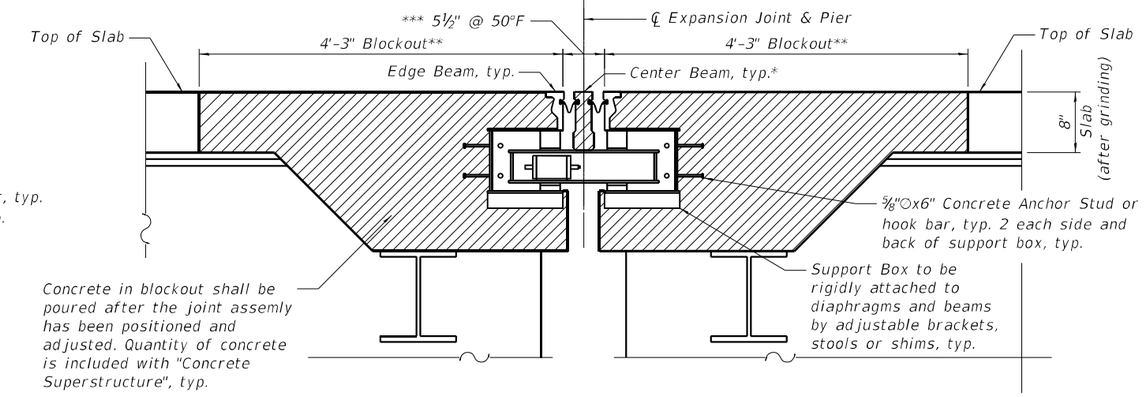

SECTION F-F

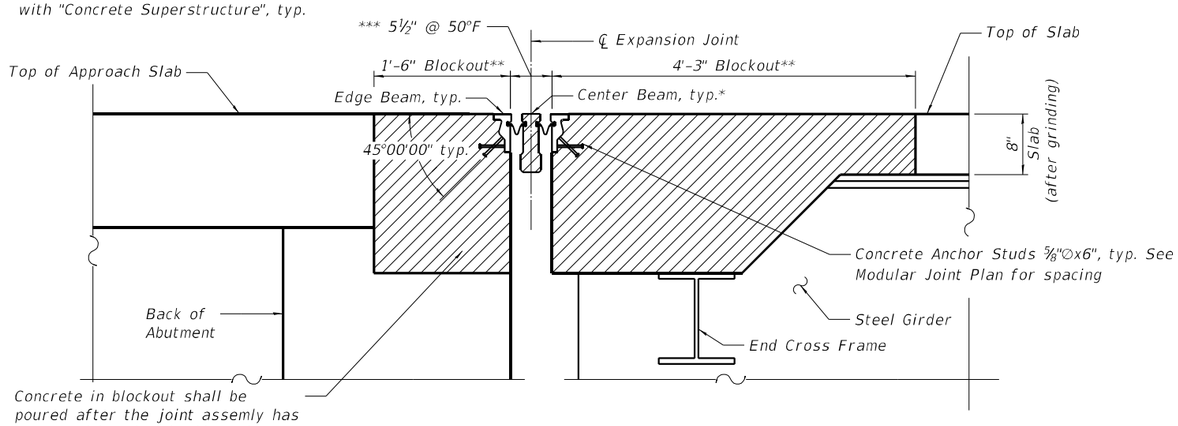

SECTION C-C

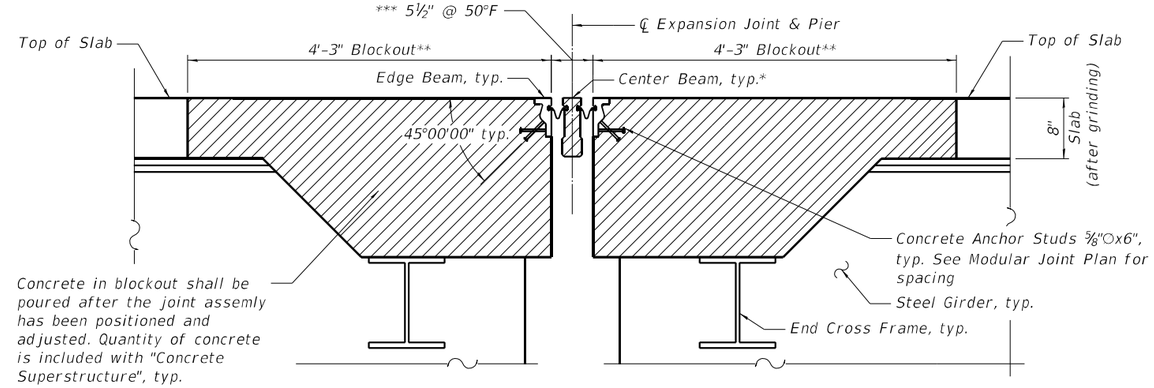

SECTION G-G

* Number of beams and seals determined by Joint Manufacturer.

** Blockout dimensions to be verified by Contractor with Joint Manufacturer.

*** Actual dimension may vary depending on modular Joint Manufacturer's design.

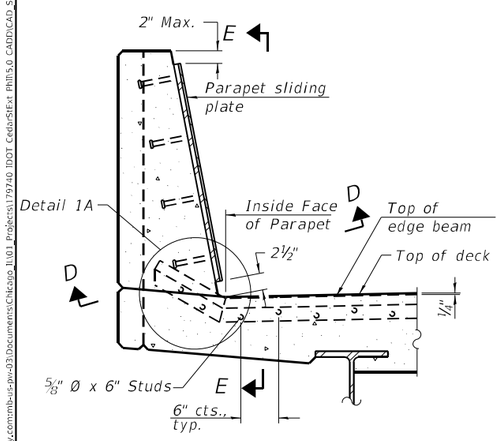

SECTION AT PARAPET

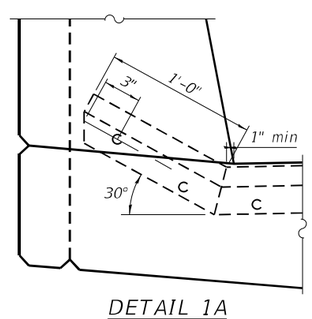

DETAIL 1A

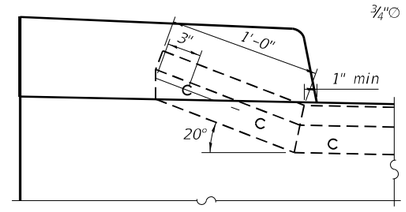

DETAIL 1B

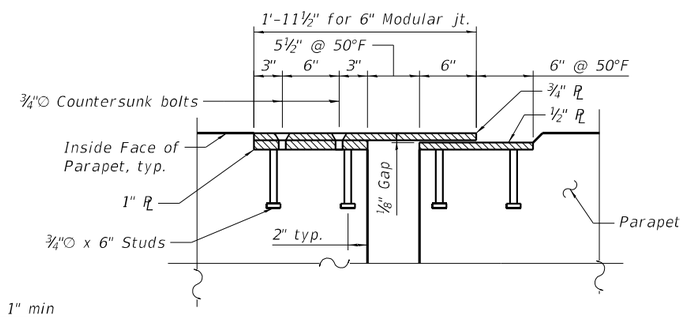

SECTION D-D

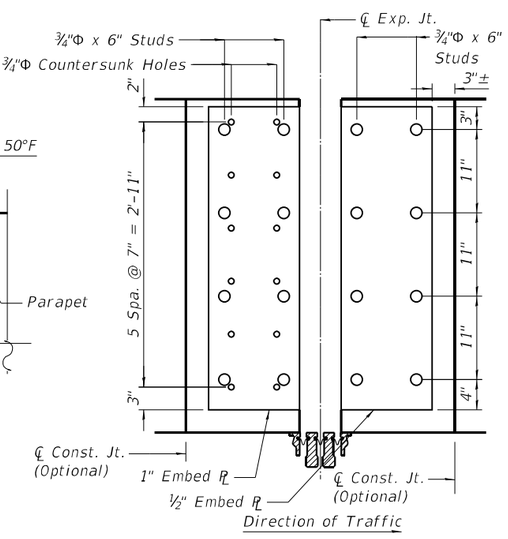

SECTION E-E

(Sliding plate not shown for clarity.)

MODEL: Default
FILE NAME: pw:\\mbs-ucs-pw-03\Documents\Chicago IL\01 Projects\179740 IDOT Ceda-SExt PRJ15.0 CADD\CAD Sheets\0900182-68C55-091-EXP175.dgn

Michael Baker INTERNATIONAL 200 W Adams Street Suite 1800 Chicago, IL 60606 P:+1 312.707.8770 FAX: 312.707.8804	USER NAME = DLamb	DESIGNED - AMR	REVISED -	STATE OF ILLINOIS DEPARTMENT OF TRANSPORTATION
		CHECKED - JTB	REVISED -	
	PLOT SCALE = 0.1667 ' / in.	DRAWN - DMJ	REVISED -	
	PLOT DATE = 6/6/2023	CHECKED - JTB	REVISED -	

MODULAR EXPANSION JOINT DETAILS
STRUCTURE NO. 090-0182

SHEET S-91 OF S-194 SHEETS

F.A.P. RTE.	SECTION	COUNTY	TOTAL SHEETS	SHEET NO.
VAR.	13 (HVB, HB-3) BR-1;R	TAZEWELL	1173	617
		CONTRACT NO. 68C55		
	ILLINOIS	FED. AID PROJECT		

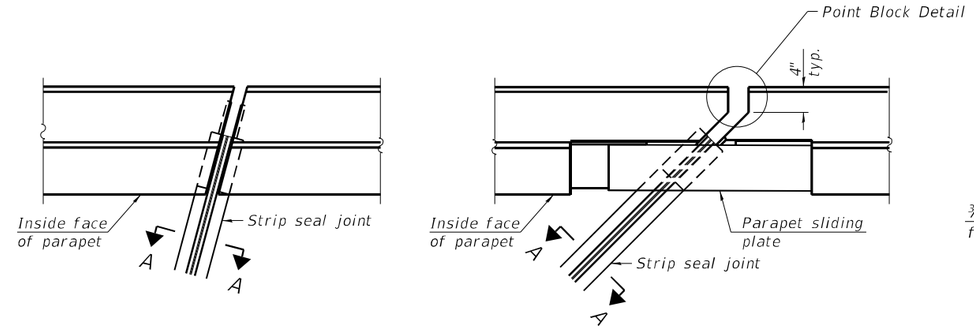

FOR SKEWS ≤ 30°

FOR SKEWS > 30°

PLAN AT PARAPET

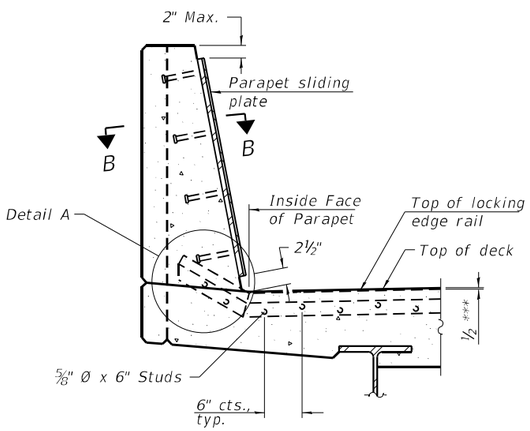

SECTION AT PARAPET

(Skews > 30° shown. Skews ≤ 30° similar except as shown in plan view.)

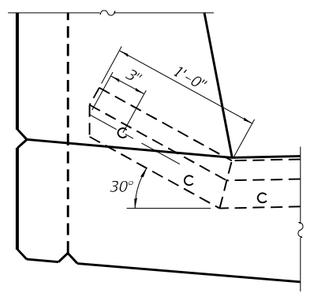

DETAIL A

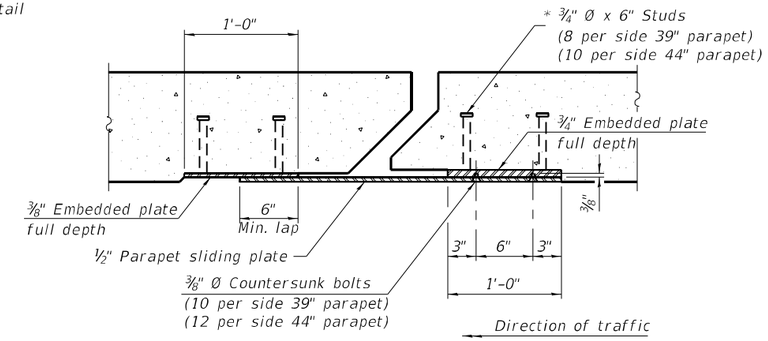

SECTION B-B

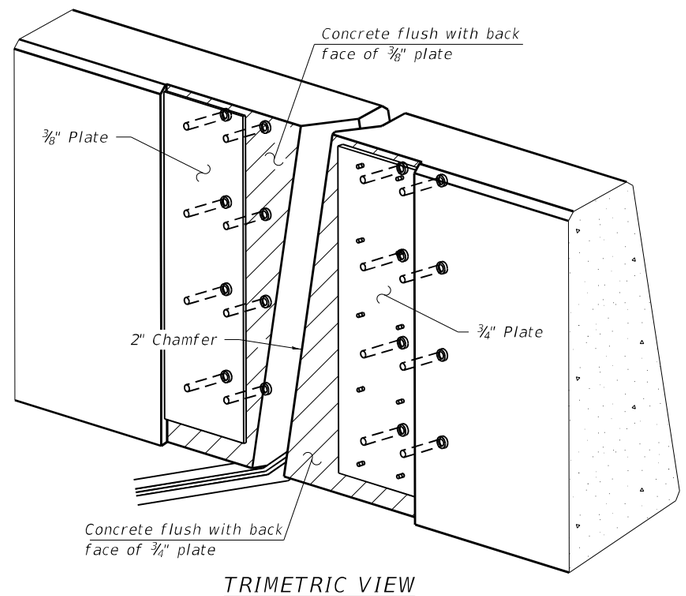

TRIMETRIC VIEW

(Showing embedded plates only)

Notes:

The strip seal shall be made continuous and shall have a minimum thickness of ¼". The configuration of the strip seal shall match the configuration of the locking edge rails. Open or "webbed" strip seal gland configurations are not permitted. The gland shall be sized for a maximum rated movement of 4 inches.

The locking edge rails depicted are configured for typical applications and are conceptual only. The actual configuration of the locking edge rails and matching strip seal may vary from manufacturer to manufacturer provided they fit the application and meet the minimum anchorage shown. Flanged edge rails, however, will not be allowed. Locking edge rails may exceed the 4½" maximum depth provided the anchorage system is revised according to the manufacturer's recommendation.

The manufacturer's recommended installation methods shall be followed.

All steel components shall be galvanized after fabrication according to Article 520.03 of the Standard Specifications.

The Maximum space between locking edge rail segments shall be 3/16" and sealed with a suitable sealant; however, any rail joint within 10' measured perpendicular to the face of the curb or parapet shall be welded as shown in the locking edge rail splice detail.

Cost of parapet sliding plates, embedded plates, and anchorage studs included with Preformed Joint Strip Seal.

39" constant slope barrier shown, 44" constant slope barrier similar as noted.

The concrete opening below the strip seal will vary based on the locking edge rail chosen by the Contractor. Deck and parapet lengths shown elsewhere in the plans are dimensioned to the concrete opening, not the joint opening, and are based on the rolled locking edge rail. If the Contractor elects to use a different locking edge rail, dimensional adjustments may be required. One exception to this would be the strip seal joint at the end of the precast bridge approach slab. For these cases the pavement connector length shall be adjusted, not the length of the bridge approach slab.

Steel sliding plates and associated steel components shall be hot dip galvanized.

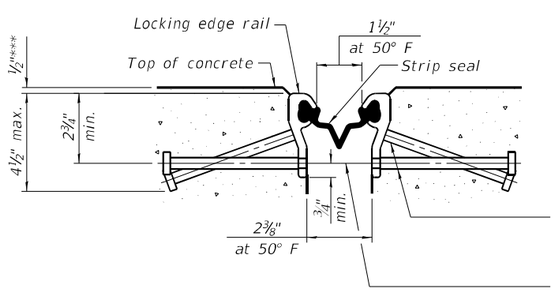

SHOWING ROLLED RAIL JOINT

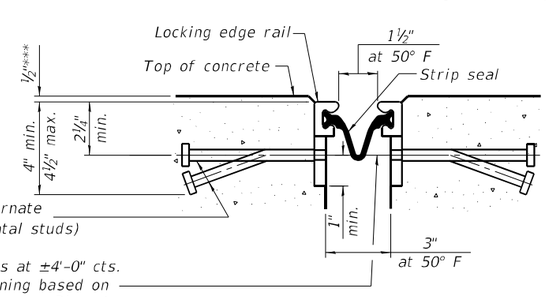

SHOWING WELDED RAIL JOINT

* ⅝" Ø x 6" studs @ 6" cts. (alternate angled/bent studs with horizontal studs)

⅜" ϕ threaded rods in 7/16" ϕ holes at ±4'-0" cts. for holding the proper joint opening based on the temperature during the deck pour. Place to miss studs. All rods shall be burned, or sawed off flush with the plates after concrete is set.

SECTION A-A

* Granular or solid flux filled headed studs conforming to Article 1006.32 of the Std. Specs., automatically end welded.

*** Prior to grinding

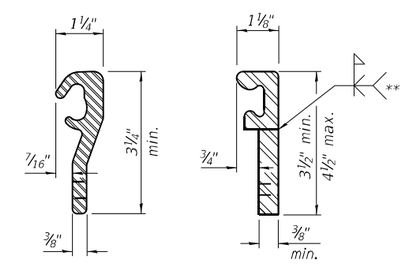

ROLLED (EXTRUDED) RAIL

WELDED RAIL

LOCKING EDGE RAILS

** Back gouge not required if complete joint penetration is verified by mock-up.

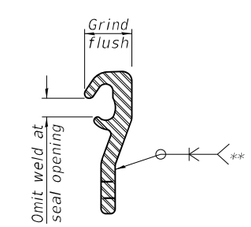

LOCKING EDGE RAIL SPLICE

The inside of the locking edge rail groove shall be free of weld residue. Rolled rail shown, welded rail similar.

BILL OF MATERIAL

Item	Unit	Total
Preformed Joint Strip Seal	Foot	31

Michael Baker INTERNATIONAL
200 W Adams Street
Suite 1800
Chicago, IL 60606
P:+ 312.707.8700
FAX: 312.707.8804

USER NAME = DLamb	DESIGNED - AMR	REVISED -	
	CHECKED - JTB	REVISED -	
PLOT SCALE = 0:2,0000 ':" / in.	DRAWN - DMJ	REVISED -	
PLOT DATE = 6/6/2023	CHECKED - JTB	REVISED -	

STATE OF ILLINOIS
DEPARTMENT OF TRANSPORTATION

MODIFIED EXPANSION JOINT DETAILS – SOUTH ABUTMENT C
STRUCTURE NO. 090–0182

SHEET S-92 OF S-194 SHEETS

F.A.P. RTE.	SECTION	COUNTY	TOTAL SHEETS	SHEET NO.
VAR.	13 (HVB, HB-3) BR-1;R	TAZEWELL	1173	618
		CONTRACT NO. 68C55		
	ILLINOIS	FED. AID PROJECT		

MODEL: Default
FILE NAME: pw:\\mbakerintl.com\mb-us-sow\Jenellyn.Lamb\Documents\Chicago IL\01 Projects\179740 IDOT Ceda-SExt PRH15.0 CADD\CAD Sheets\0900182-68C55-092-EXP19.dgn

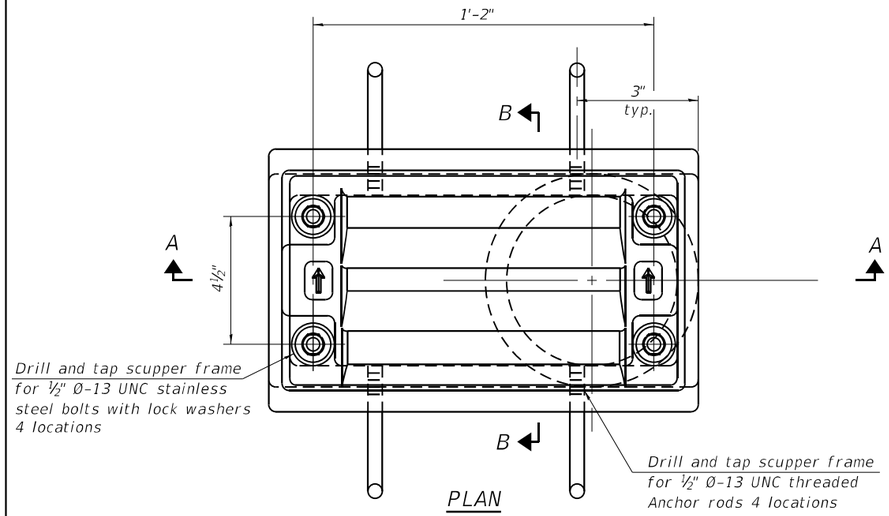

PLAN

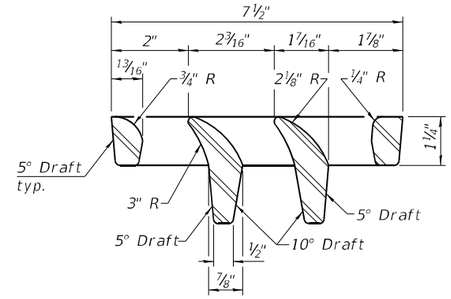

VANE GRATE DETAIL

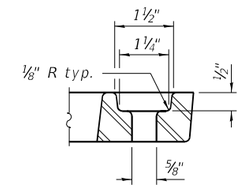

GRATE BOLT HOLE DETAIL

Notes:

All cast iron parts shall be gray iron conforming to the requirements of AASHTO M105, Class 35B and AASHTO M306.

Bolts, anchor rods, nuts and washers shall be according to ASTM A307 and shall be galvanized according to AASHTO M232. As an alternate stainless steel may be used.

Stainless steel hardware shall be according to Article 1006.29(d) of the Standard Specifications.

Structural steel weldments of equal sections and of the same configuration may be substituted for the cast iron scupper frames and downspouts; however, the scupper grates shall remain cast iron. Fillet or full penetration welds shall be used for the weldments. Details shall be submitted to the Engineer for approval.

Structural steel scupper frames and downspouts, when utilized, shall be galvanized according to AASHTO M111.

As an alternate, fiberglass may be used for downspouts according to ASTM D2996 with a short-time rupture strength hoop tensile stress of 30,000 psi min. in lieu of the cast iron or structural steel.

Downspouts located on the exterior side of a painted steel fascia beam shall be painted with the finish coat specified for the exterior side of the fascia beam.

The Contractor shall take appropriate measures to assure that Protective Coat is not applied to the scupper.

Cost of the grate, frame, downspout, anchor rods, nuts and washers including complete installation of the scupper shall be paid for at the contract unit price for Drainage Scupper, DS-11.

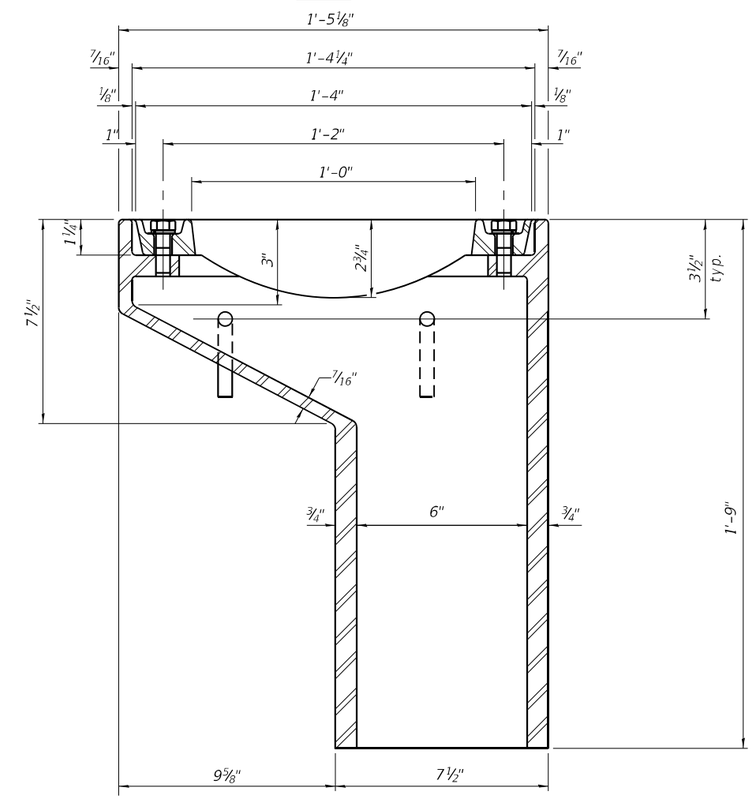

SECTION A-A

See sheet S-71 for scupper location relative to parapet.

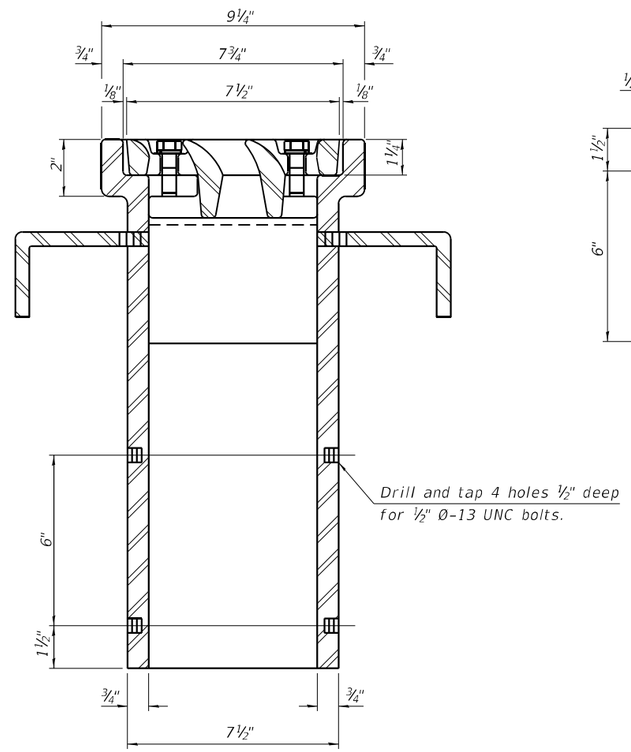

SECTION B-B

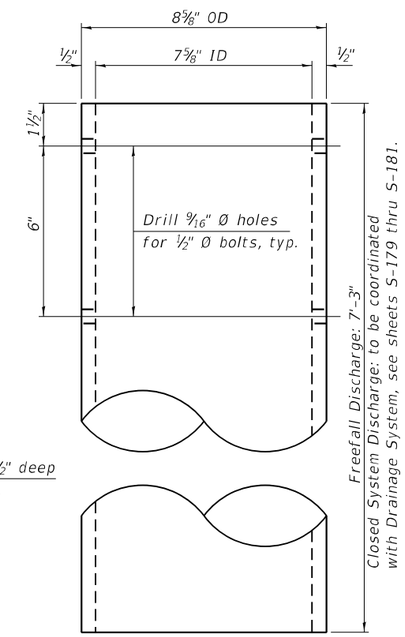

DOWNSPOUT

For discharge type, see sheet S-2.

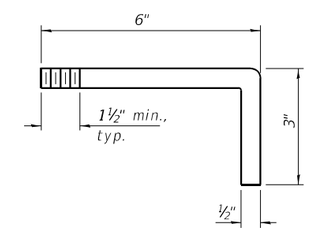

ANCHOR ROD DETAIL

BILL OF MATERIAL

ITEM	UNIT	TOTAL
Drainage Scupper, DS-11	Each	25

DS-11 1-1-2020

Michael Baker INTERNATIONAL
200 W Adams Street
Suite 1800
Chicago, IL 60606
P:+ 312.707.8870
FAX: 312.707.8804

USER NAME = DLamb	DESIGNED - JMK	REVISED -
	CHECKED - ADM	REVISED -
PLOT SCALE = 0:2.0000 ':" / in.	DRAWN - DCL	REVISED -
PLOT DATE = 6/6/2023	CHECKED - ADM	REVISED -

STATE OF ILLINOIS
DEPARTMENT OF TRANSPORTATION

DRAINAGE SCUPPER DS-11
STRUCTURE NO. 090-0182

SHEET S-93 OF S-194 SHEETS

F.A.P. RTE.	SECTION	COUNTY	TOTAL SHEETS	SHEET NO.
VAR.	13 (HVB, HB-3) BR-1;R	TAZEWELL	1173	619
		CONTRACT NO. 68C55		
		ILLINOIS FED. AID PROJECT		

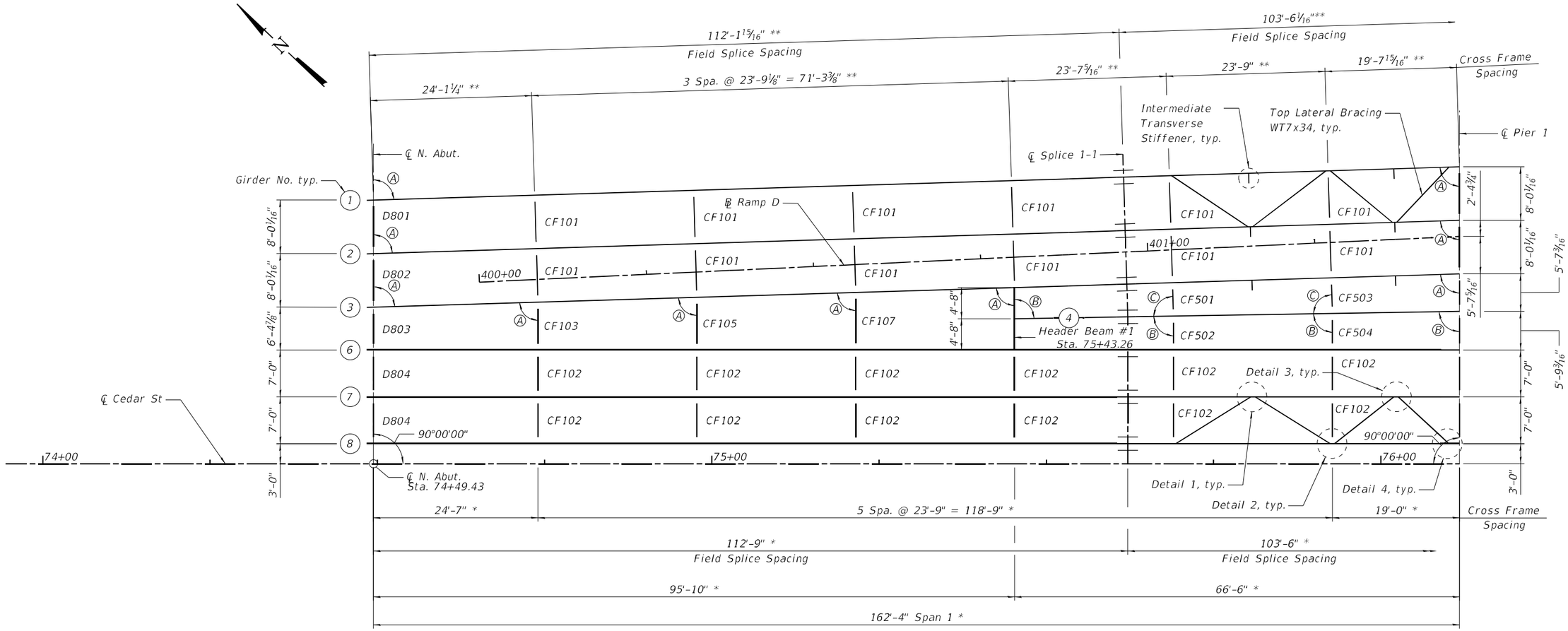

* Measured along ℄ Cedar St.
** Measured along Girder 1

FRAMING PLAN - SPAN 1

CROSS FRAME ANGLES

CALLOUT	ANGLE
A	88°14'59"
B	89°03'10"
C	89°11'49"

NOTES:

1. See S-103 thru S-115 for girder elevation.
2. See S-116 thru S-124 for camber & top of web elevations.
3. See S-125 thru S-134 for moment tables & reaction tables.
4. See S-135 thru S-136 for girder bolted field splice details.
5. DXXXX denotes End Cross Frame, CFXXX denotes Interior Cross Frame. See S-137 thru S-139 for girder cross frame details.
6. See S-140 for Details 1, 2, 3 and 4 and otherlateral bracing details.
7. Cross Frames are perpendicular to girders unless noted otherwise.
8. All cross frames between girders shall be installed with erection pins and bolts in accordance with erection plan submitted to and approved by the Engineer. Individual cross frames at supports may be temporarily disconnected to install bearing anchor rods.
9. Curved girder segments do not meet the requirements for heat bending. Flanges shall be cut for horizontal curvature. Webs shall be cut for vertical girder camber.

Michael Baker INTERNATIONAL
200 W Adams Street
Suite 1800
Chicago, IL 60606
PH: 312.707.8700
FAX: 312.707.8804

USER NAME = DLamb	DESIGNED - JMK/JTB	REVISED -	
	CHECKED - XW	REVISED -	
PLOT SCALE = 15:11.9992 ':" / in.	DRAWN - DMJ	REVISED -	
PLOT DATE = 6/6/2023	CHECKED - XW	REVISED -	

STATE OF ILLINOIS
DEPARTMENT OF TRANSPORTATION

LT UNIT 1 – FRAMING PLAN 1
STRUCTURE NO. 090–0182

SHEET S-94 OF S-194 SHEETS

F.A.P. RTE.	SECTION	COUNTY	TOTAL SHEETS	SHEET NO.
VAR.	13 (HVB, HB-3) BR-1;R	TAZEWELL	1173	620
		CONTRACT NO. 68C55		
		ILLINOIS FED. AID PROJECT		

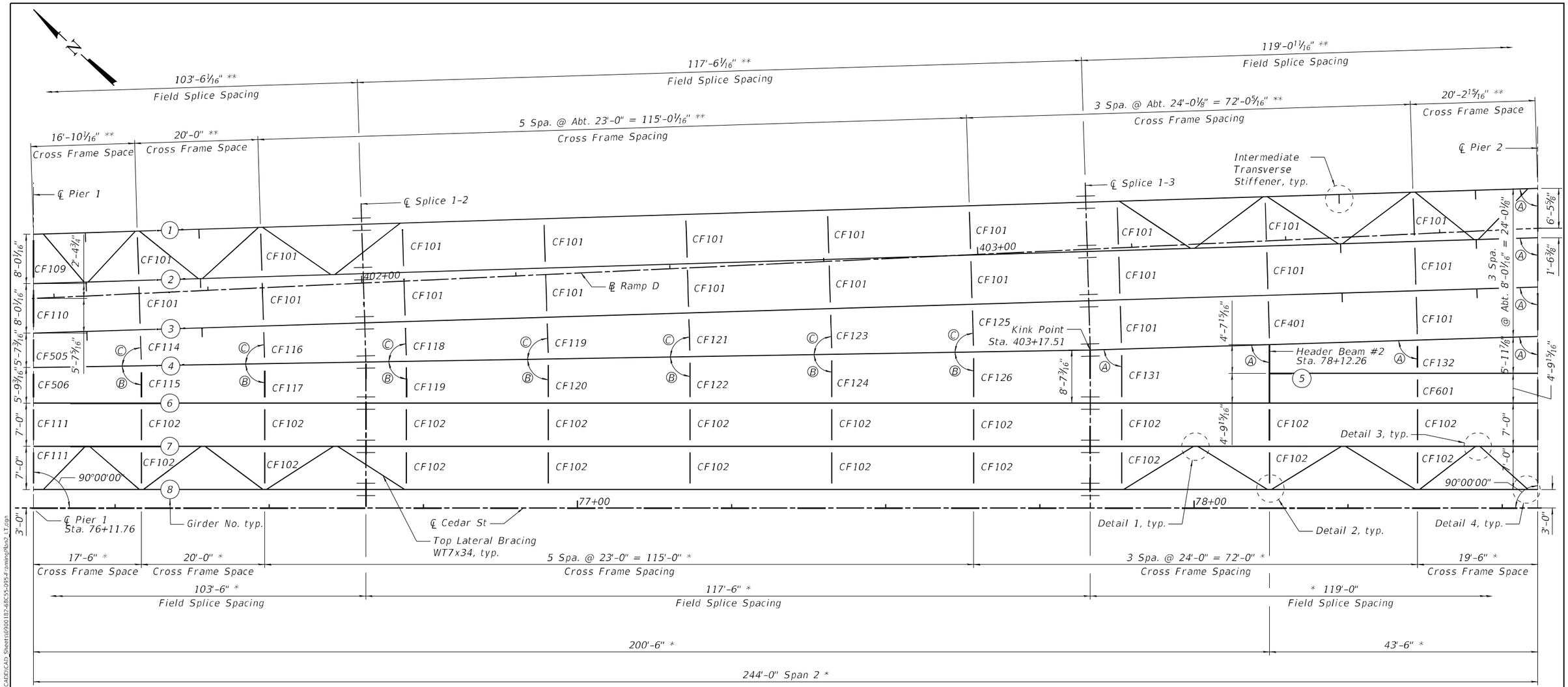

* Measured along ℄ Cedar Street
** Measured along Girder 1

FRAMING PLAN - SPAN 2

CROSS FRAME ANGLES

CALLOUT	ANGLE
A	88°14'59"
B	89°03'10"
C	89°11'49"

NOTES:

1. See sheet S-94 for typical notes.

MODEL: Default
FILE NAME: pw:\\mb-us-pw-03\Documents\Chicago IL\01 Projects\179740 IDOT Cedar St Ext Phll 5.0 CADD\CAD Sheets\0900182-68C55-095-FramingPlan2_T.dgn

Michael Baker INTERNATIONAL
200 W Adams Street
Suite 1800
Chicago, IL 60606
PH: 312.707.8770
FAX: 312.707.8804

USER NAME = DLamb	DESIGNED - JMK/JTB	REVISED -	
	CHECKED - XW	REVISED -	
PLOT SCALE = 15:11.9992 ':" / in.	DRAWN - DMJ	REVISED -	
PLOT DATE = 6/6/2023	CHECKED - XW	REVISED -	

STATE OF ILLINOIS
DEPARTMENT OF TRANSPORTATION

LT UNIT 1 – FRAMING PLAN 2
STRUCTURE NO. 090–0182

SHEET S-95 OF S-194 SHEETS

F.A.P. RTE.	SECTION	COUNTY	TOTAL SHEETS	SHEET NO.
VAR.	13 (HVB, HB-3) BR-1;R	TAZEWELL	1173	621
		CONTRACT NO. 68C55		
	ILLINOIS	FED. AID PROJECT		

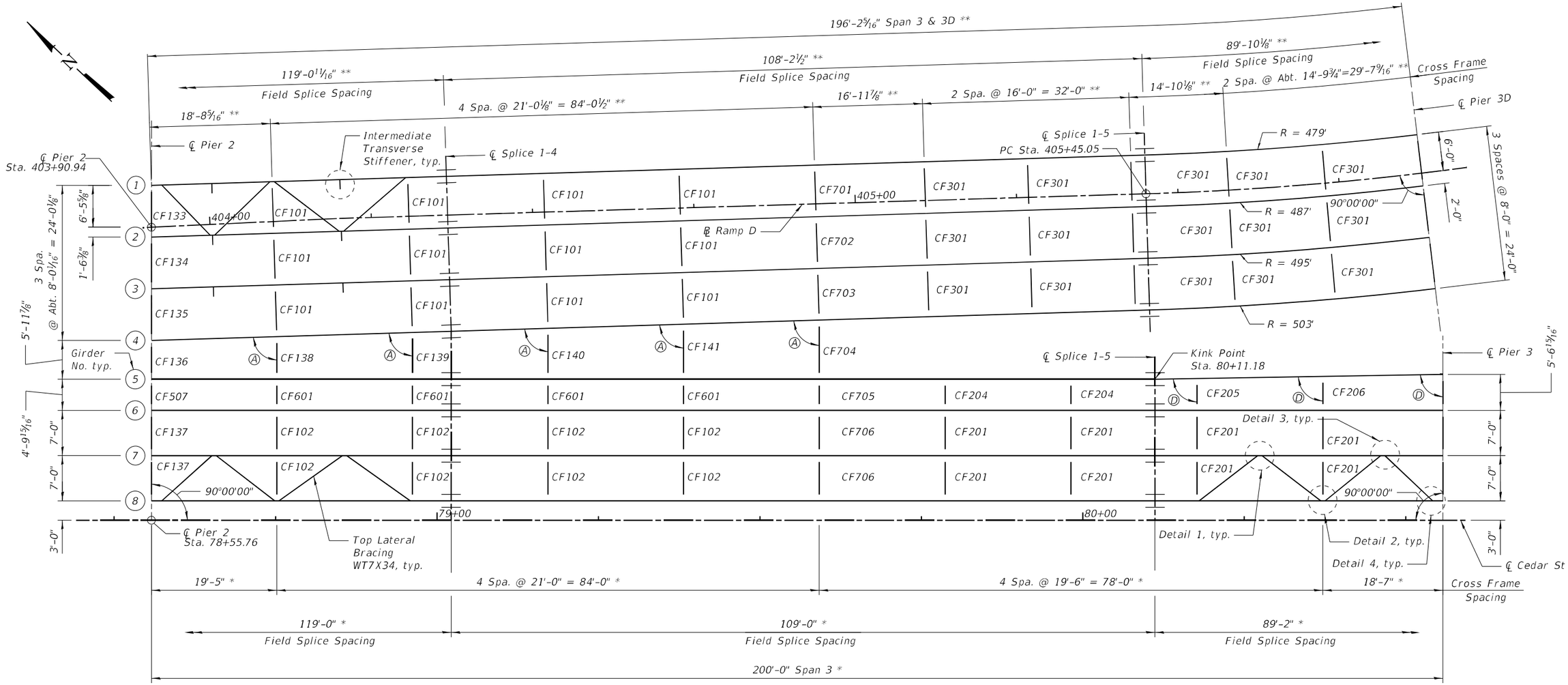

* Measured along ℄ Cedar St.
** Measured along Girder 1

FRAMING PLAN - SPAN 3

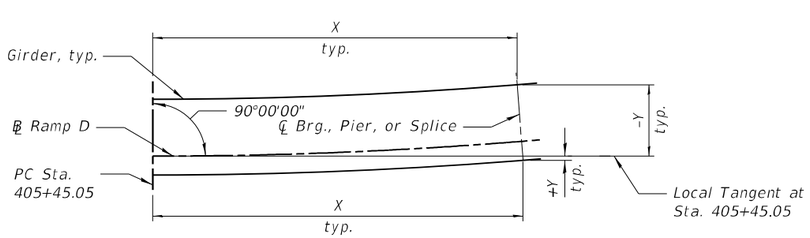

CURVED GIRDER LAYOUT

(X Measured along Local Tangent)

GIRDER COORDINATES

(All dimensions in feet)

Girder	PC Sta. 405+45.05		℄ Splice 1-5		℄ Pier 3D	
	X	Y	X	Y	X	Y
1	0.000	-6.000	0.000	-6.000	42.224	-7.865
2	0.000	2.000	0.000	2.000	42.930	0.104
3	0.000	10.000	0.000	10.000	43.635	8.073
4	0.000	18.000	0.000	18.000	44.340	16.042

CROSS FRAME ANGLES

CALLOUT	ANGLE
A	88°14'59"
D	89°02'11"

NOTE:

1. See sheet S-94 for typical notes.

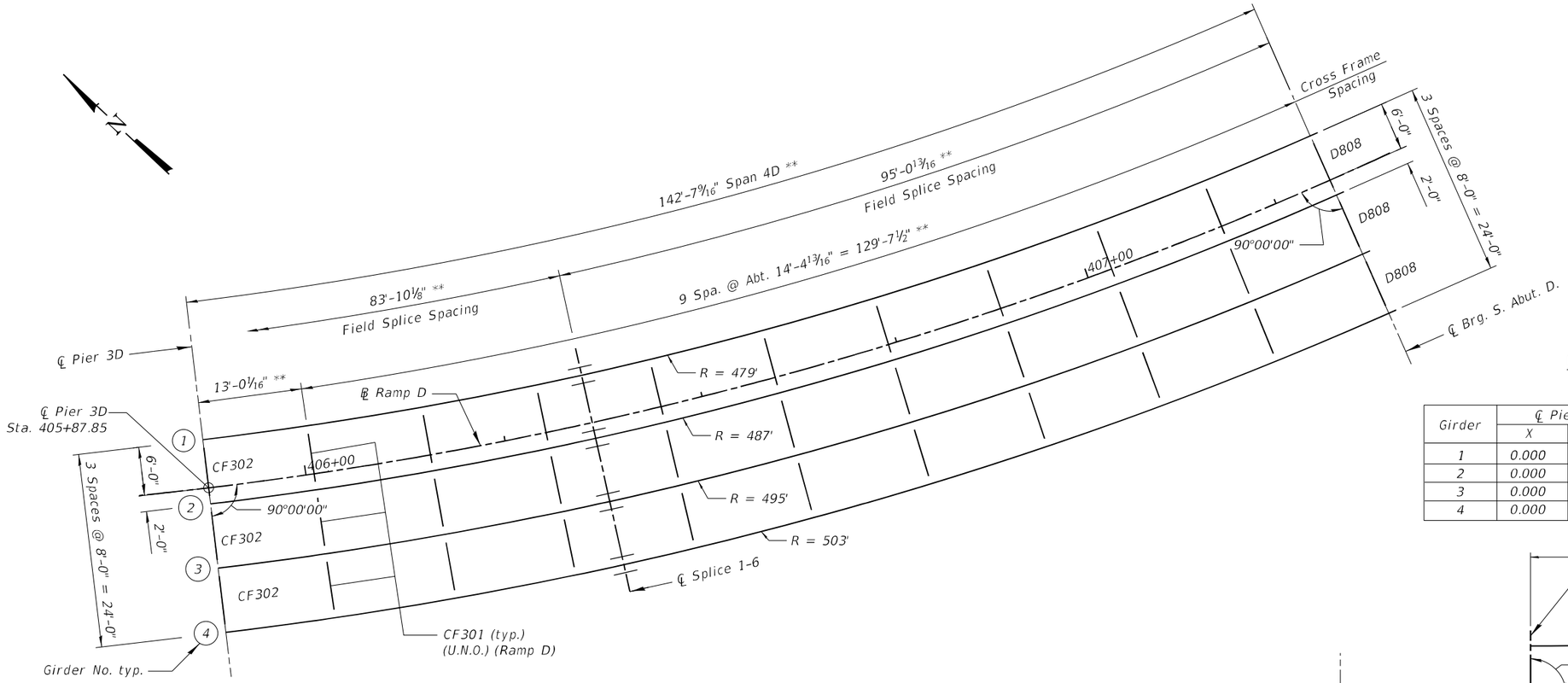

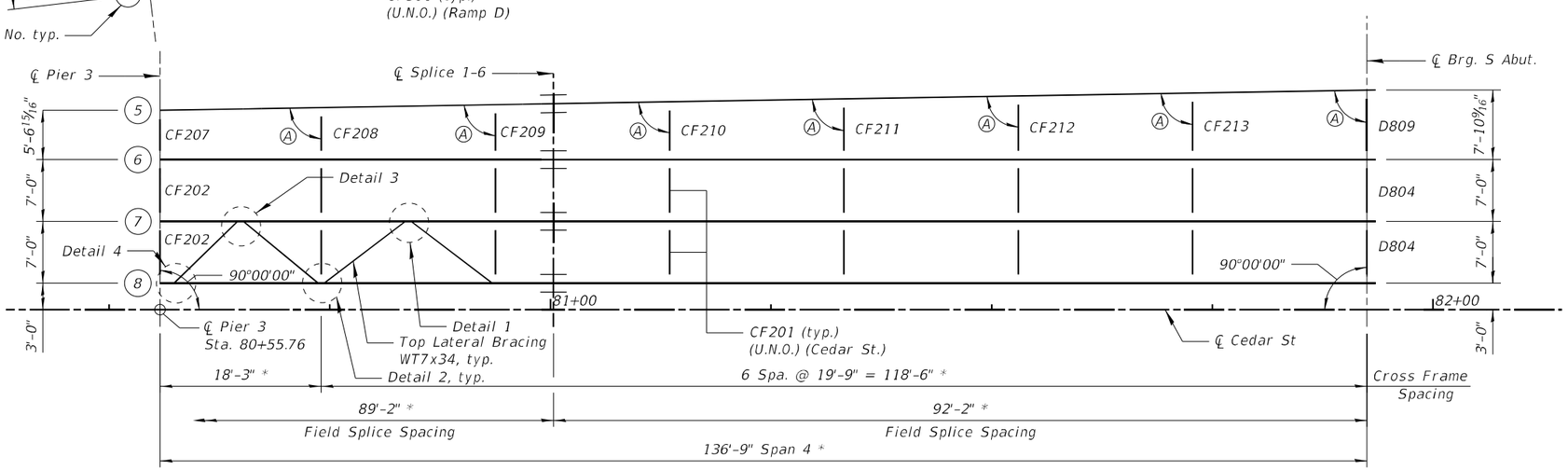

* Measured along ℄ Cedar Street
** Measured along Girder 1

FRAMING PLAN - SPAN 4 & 4D

GIRDER COORDINATES

(All dimensions in feet)

Girder	℄ Pier 3D		℄ Splice 1-6		℄ Brg. S. Abut. D	
	X	Y	X	Y	X	Y
1	0.000	-6.000	47.485	8.360	140.532	27.079
2	0.000	2.000	48.288	0.400	142.881	19.432
3	0.000	10.000	49.091	7.560	145.226	11.783
4	0.000	18.000	49.894	15.519	147.573	4.135

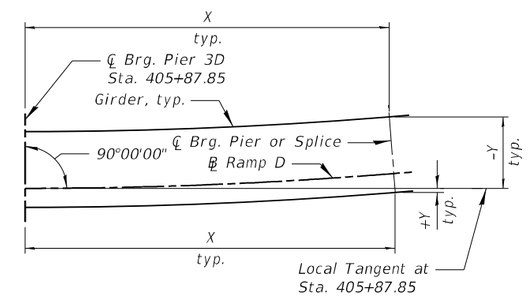

CURVED GIRDER LAYOUT

(X Measured along Local Tangent)

CROSS FRAME ANGLES

CALLOUT	ANGLE
D	89°02'11"

NOTE:

1. See sheet S-94 for typical notes.

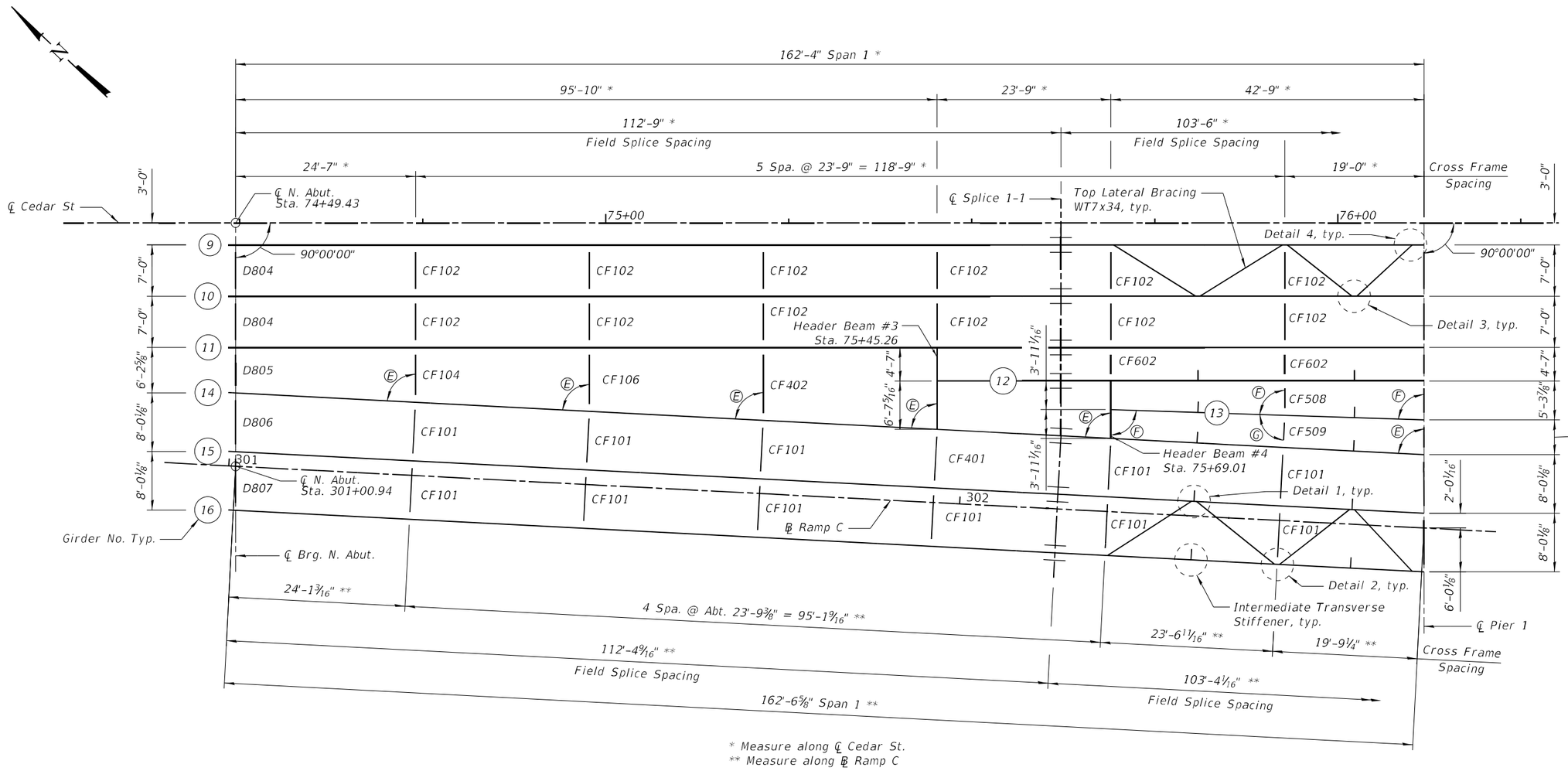

FRAMING PLAN - SPAN 1

CROSS FRAME ANGLES

CALLOUT	ANGLE
E	87°01'42"
F	88°07'13"
G	88°54'29"

NOTE:

1. See sheet S-94 for typical notes.

MODEL: Default
FILE NAME: pw:\\mcs-is-pw.bentley.com:mb-is-pw-03\Documents\Chicago_IL\01 Projects\179740 IDOT CedarSt\Ext Phl15.0 CADD\CAD Sheet\0990182-68C55-098-FramingPlan1_RT.dgn

Michael Baker INTERNATIONAL
200 W Adams Street
Suite 1800
Chicago, IL 60606
PH: 312.707.8770
FAX: 312.707.8804

USER NAME = DLamb	DESIGNED - JMK/JTB	REVISED -	
	CHECKED - XW	REVISED -	
PLOT SCALE = 15:11.9992 ':" / in.	DRAWN - DMJ	REVISED -	
PLOT DATE = 6/6/2023	CHECKED - XW	REVISED -	

STATE OF ILLINOIS
DEPARTMENT OF TRANSPORTATION

RT UNIT 1 – FRAMING PLAN 1
STRUCTURE NO. 090–0182

SHEET S-98 OF S-194 SHEETS

F.A.P. RTE.	SECTION	COUNTY	TOTAL SHEETS	SHEET NO.
VAR.	13 (HVB, HB-3) BR-1;R	TAZEWELL	1173	624
		CONTRACT NO. 68C55		
	ILLINOIS	FED. AID PROJECT		

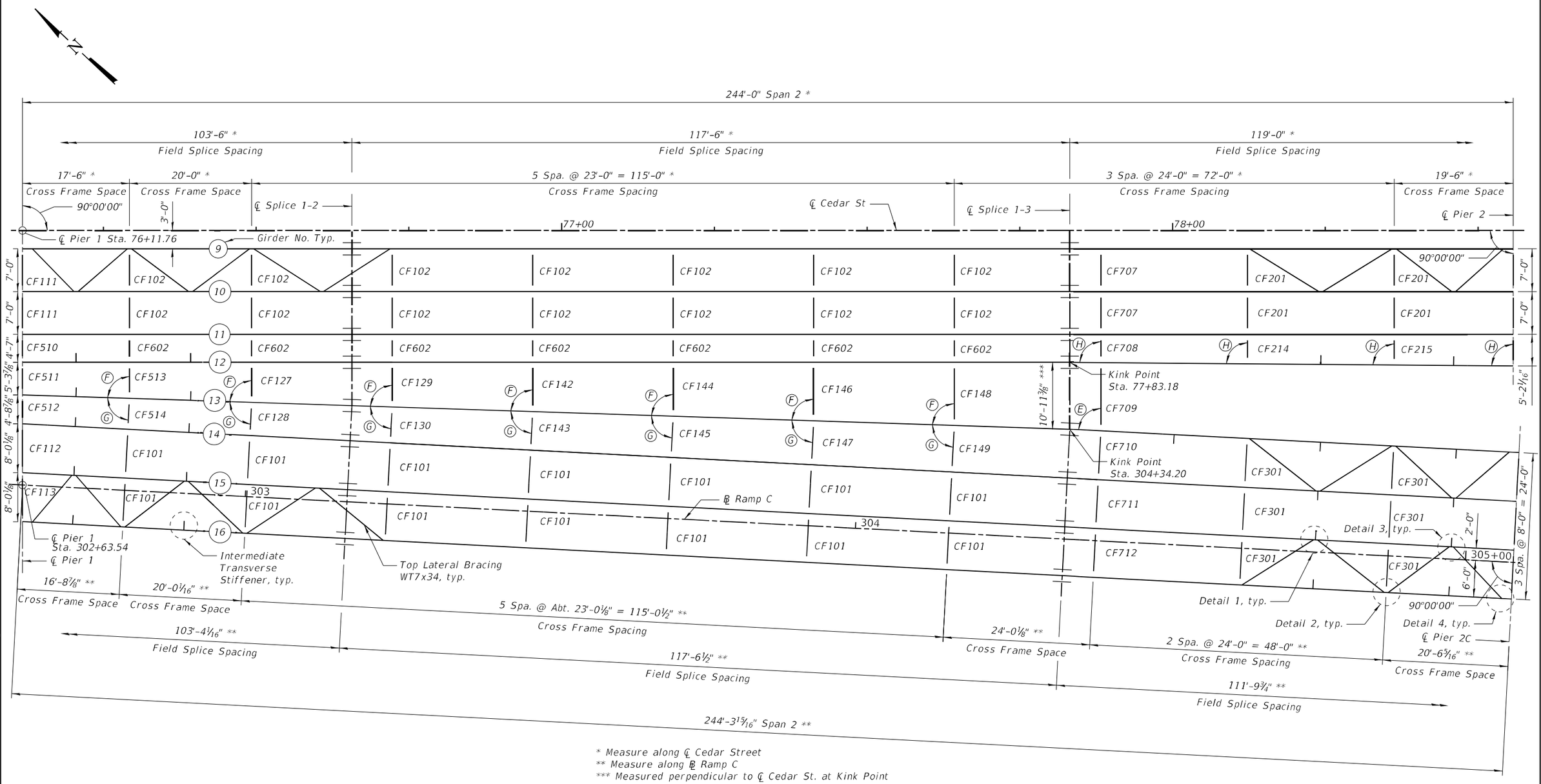

* Measure along ℄ Cedar Street
** Measure along ℄ Ramp C
*** Measured perpendicular to ℄ Cedar St. at Kink Point

FRAMING PLAN - SPAN 2

CROSS FRAME ANGLES

CALLOUT	ANGLE
E	87°01'42"
F	88°07'13"
G	88°54'29"
H	89°32'05"

NOTE:

1. See sheet S-94 for typical notes.

Michael Baker INTERNATIONAL
200 W Adams Street
Suite 1800
Chicago, IL 60606
P:+ 312.207.6870
FAX: 312.207.6804

USER NAME = DLamb	DESIGNED - JMK/JTB	REVISED -
	CHECKED - XW	REVISED -
PLOT SCALE = 15:11.9992 ':" / in.	DRAWN - DMJ	REVISED -
PLOT DATE = 6/6/2023	CHECKED - XW	REVISED -

STATE OF ILLINOIS
DEPARTMENT OF TRANSPORTATION

RT UNIT 1 – FRAMING PLAN 2
STRUCTURE NO. 090–0182

SHEET S-99 OF S-194 SHEETS

F.A.P. RTE.	SECTION	COUNTY	TOTAL SHEETS	SHEET NO.
VAR.	13 (HVB, HB-3) BR-1;R	TAZEWELL	1173	625
		CONTRACT NO. 68C55		
		ILLINOIS	FED. AID PROJECT	

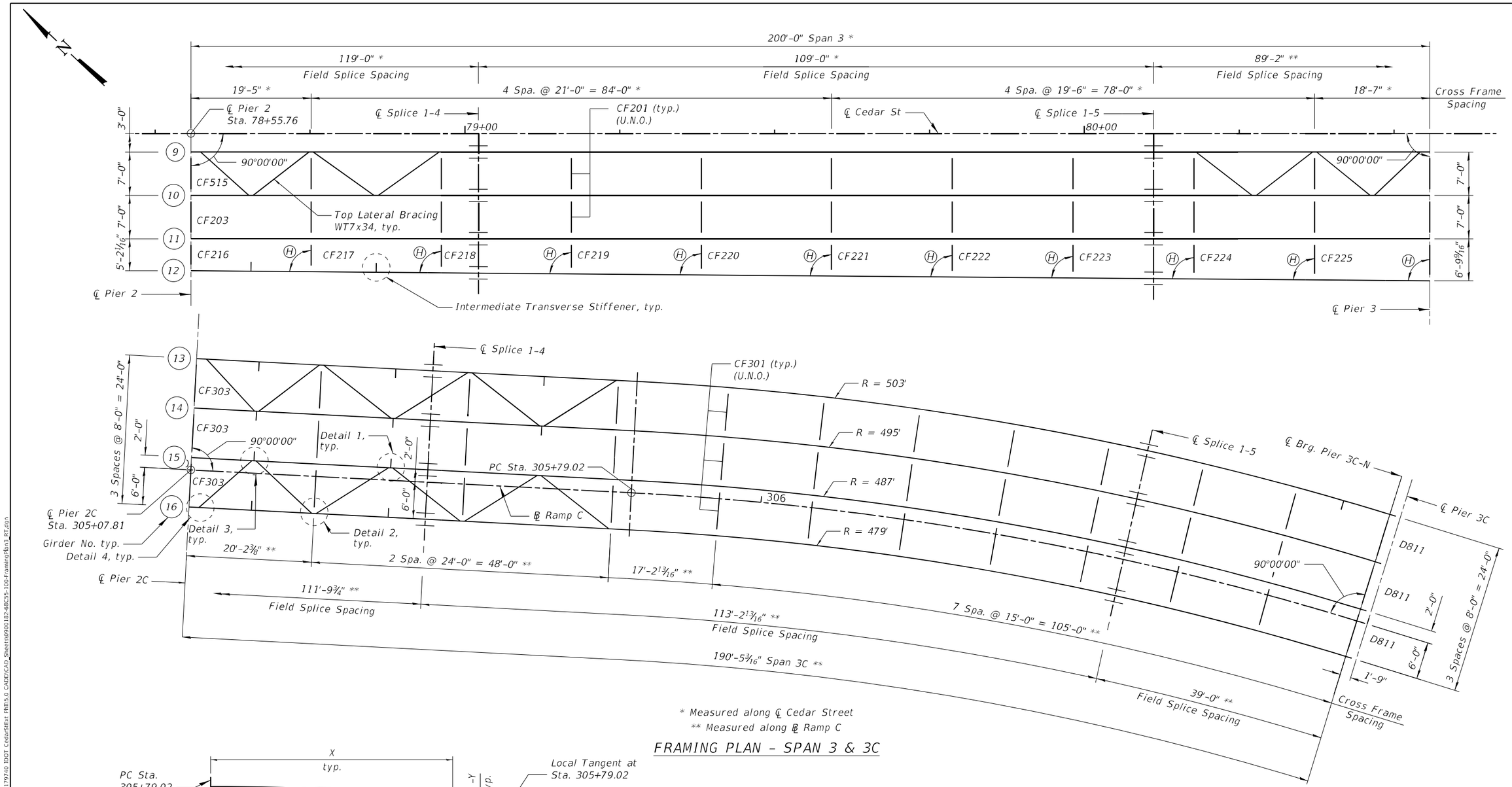

* Measured along ℄ Cedar Street

** Measured along ℄ Ramp C

FRAMING PLAN - SPAN 3 & 3C

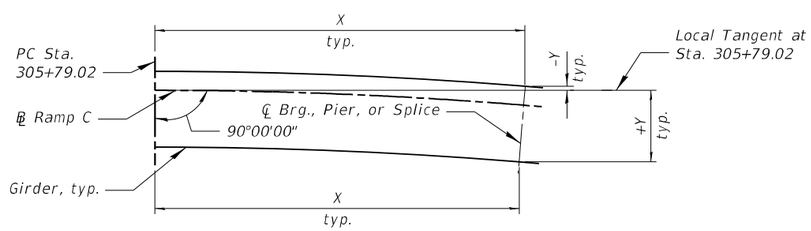

CURVED GIRDER LAYOUT

(X Measured along Local Tangent)

GIRDER COORDINATES

(All dimensions in feet)

Girder	PC Sta. 305+79.02		℄ Splice 1-5		℄ Brg. Pier 3C-N	
	X	Y	X	Y	X	Y
13	0.000	-18.000	82.897	-11.122	122.481	-2.860
14	0.000	-10.000	81.552	-3.236	120.506	4.892
15	0.000	-2.000	80.206	4.650	118.531	12.645
16	0.000	6.000	78.860	12.536	116.556	20.397

CROSS FRAME ANGLES

CALLOUT	ANGLE
H	89°32'05"

NOTE:

1. See sheet S-94 for typical notes.

Michael Baker INTERNATIONAL
200 W Adams Street
Suite 1800
Chicago, IL 60606
PH: 312.707.8772
FAX: 312.707.8804

USER NAME = DLamb	DESIGNED - JMK/JTB	REVISED -	
	CHECKED - XW	REVISED -	
PLOT SCALE = 15:11.9992 ':" / in.	DRAWN - DMJ	REVISED -	
PLOT DATE = 6/6/2023	CHECKED - XW	REVISED -	

STATE OF ILLINOIS
DEPARTMENT OF TRANSPORTATION

RT UNIT 1 – FRAMING PLAN 3
STRUCTURE NO. 090–0182

SHEET S-100 OF S-194 SHEETS

F.A.P. RTE.	SECTION	COUNTY	TOTAL SHEETS	SHEET NO.
VAR.	13 (HVB, HB-3) BR-1;R	TAZEWELL	1173	626

CONTRACT NO. 68C55

ILLINOIS FED. AID PROJECT

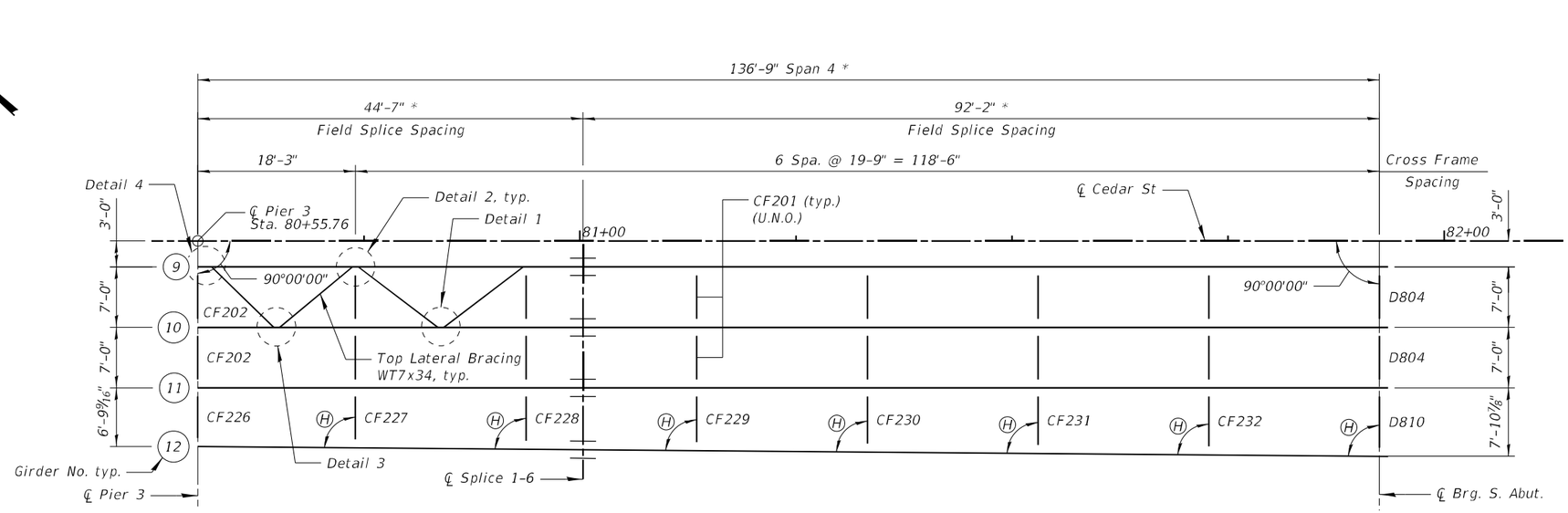

* Measure along ℄ Cedar Street

FRAMING PLAN - SPAN 4

CROSS FRAME ANGLES

CALLOUT	ANGLE
H	89°32'05"

NOTE:

1. See sheet S-94 for typical notes.

MODEL: Default
FILE NAME: pw:\\mbi-usciw.bentley.com:mbi-usciw-03\Documents\Chicago IL\01 Projects\179740 IDOT Ceda/SExt PRJ\5.0 CADD\CAD Sheets\0900182-68C55-101-Framing(Rnd4 RT.dgn

Michael Baker INTERNATIONAL
200 W Adams Street
Suite 1800
Chicago, IL 60606
P:+312,707,8770
FAX: 312,707,8804

USER NAME = DLamb	DESIGNED - JMK/JTB	REVISED -	
	CHECKED - XW	REVISED -	
PLOT SCALE = 15:11.9992 ':" / in.	DRAWN - DMJ	REVISED -	
PLOT DATE = 6/6/2023	CHECKED - XW	REVISED -	

STATE OF ILLINOIS
DEPARTMENT OF TRANSPORTATION

RT UNIT 1 – FRAMING PLAN 4
STRUCTURE NO. 090–0182

SHEET S-101 OF S-194 SHEETS

F.A.P. RTE.	SECTION	COUNTY	TOTAL SHEETS	SHEET NO.
VAR.	13 (HVB, HB-3) BR-1;R	TAZEWELL	1173	627
		CONTRACT NO. 68C55		
	ILLINOIS	FED. AID PROJECT		

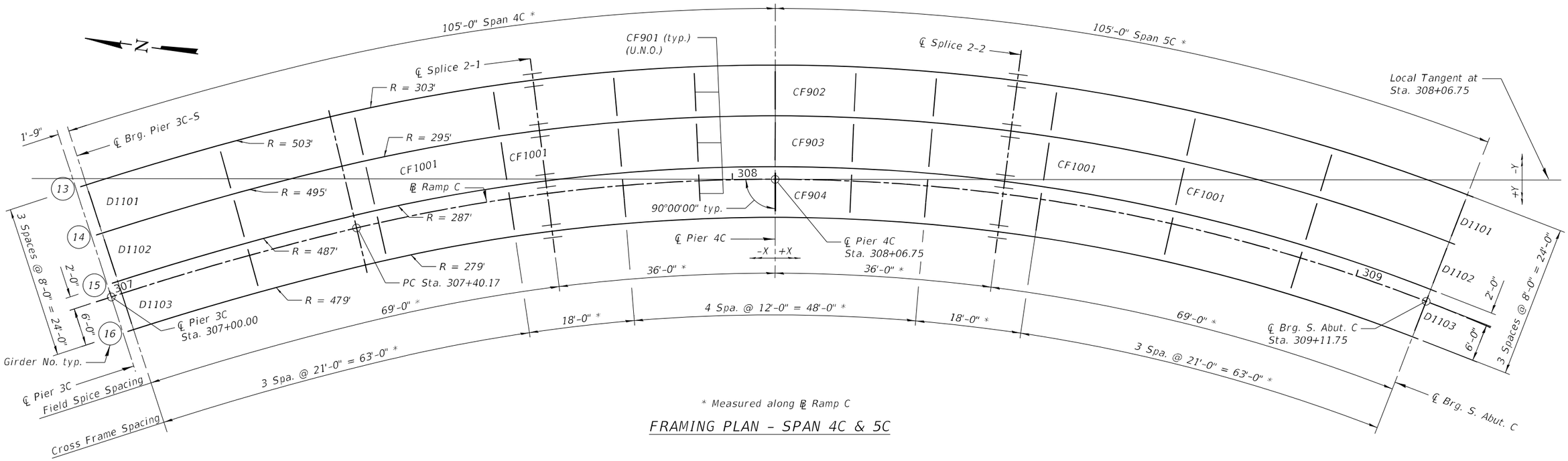

* Measured along ℄ Ramp C

FRAMING PLAN - SPAN 4C & 5C

GIRDER COORDINATES

(All dimensions in feet)

Girder	℄ Brg. Pier 3C-S		℄ Splice 2-1		℄ Pier 4C		℄ Splice 2-2		℄ Brg. S. Abut. C	
	X	Y	X	Y	X	Y	X	Y	X	Y
13	-108.563	0.999	-38.172	-15.856	0.000	-18.000	38.172	-15.586	109.122	2.332
14	-106.073	8.602	-37.165	-7.650	0.000	-10.000	37.191	-7.650	106.241	9.795
15	-103.584	16.205	-36.157	0.287	0.000	-2.000	37.879	0.287	103.360	17.259
16	-101.094	23.808	-35.149	8.223	0.000	6.000	35.149	8.223	100.479	24.722

NOTE:

1. See sheet S-94 for typical notes.

Michael Baker INTERNATIONAL
200 W Adams Street
Suite 1800
Chicago, IL 60606
Ph: 312.707.8700
FAX: 312.707.8804

USER NAME = DLamb	DESIGNED - JMK	REVISED -	
	CHECKED - XW	REVISED -	
PLOT SCALE = 15.9999 ' / in.	DRAWN - DMJ	REVISED -	
PLOT DATE = 6/6/2023	CHECKED - XW	REVISED -	

STATE OF ILLINOIS
DEPARTMENT OF TRANSPORTATION

UNIT 2 – FRAMING PLAN 1
STRUCTURE NO. 090–0182

SHEET S-102 OF S-194 SHEETS

F.A.P. RTE.	SECTION	COUNTY	TOTAL SHEETS	SHEET NO.
VAR.	13 (HVB, HB-3) BR-1;R	TAZEWELL	1173	628
		CONTRACT NO. 68C55		
		ILLINOIS	FED. AID PROJECT	

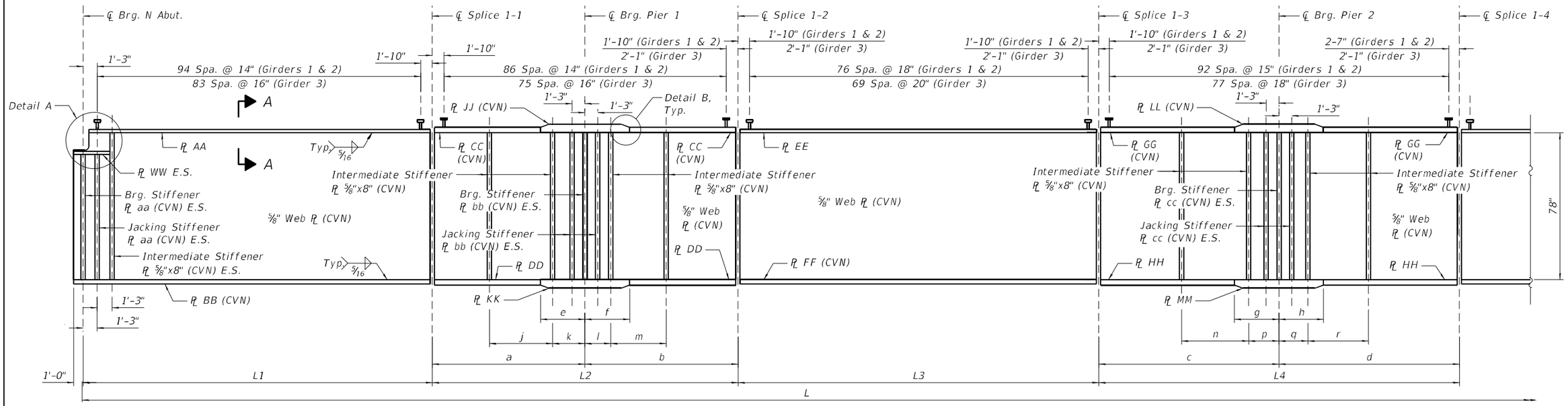

GIRDER ELEVATION - UNIT 1

(Girders 1, 2, and 3)

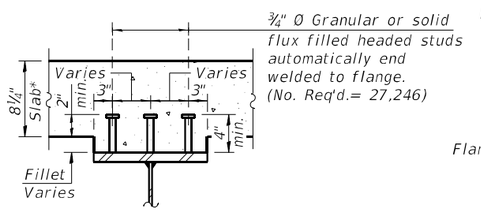

SECTION A-A

* Prior to grinding

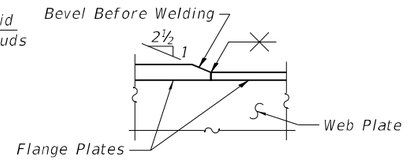

DETAIL "B"

Note: Grind both sides of weld in direction of stress

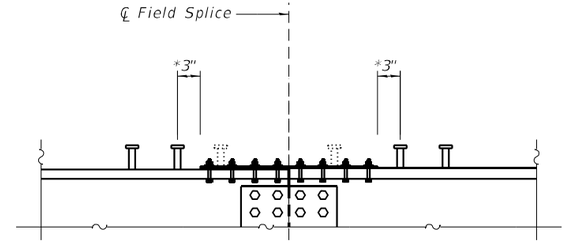

SHEAR CONNECTOR DETAIL AT SPLICE AND FLANGE TRANSITIONS

DO NOT place shear connectors on splice plates.
*If measured location places a row of studs on a splice plate within 3" of a splice plate, move the row of studs to 3" beyond nearest edge of the splice plate.

STIFFENER PLATE DIMENSIONS - UNIT 1

Girder	aa	bb	cc
Girder 1	1 1/4" x 11"	1 1/4" x 11"	1 1/4" x 12"
Girder 2	1 1/4" x 11"	1 1/4" x 11"	1 1/4" x 12"
Girder 3	1" x 8"	1" x 9"	1" x 9"

NOTES:

1. See sheet S-94 thru sheet S-102 for girder framing plan.
2. See sheet S-104 for Detail A.
3. See sheet S-116 thru sheet S-124 for camber and top of web elevations.
4. See sheet S-125 thru sheet S-134 for moment and reaction tables.
5. See sheet S-135 thru sheet S-136 for bolted field splice details.
6. See sheet S-137 thru sheet S-139 for cross frame details.
7. All structural steel shall be AASHTO M270 Grade 50 unless noted otherwise.
8. "CVN" denotes Charpy-V-Notch impact energy requirements, zone 2.
9. Connection and splice plates not shown for clarity.
10. All cross frames or diaphragms between girders shall be installed with erection pins and bolts in accordance with erection plan approved by Engineer. Individual cross frames or diaphragms at supports may be temporarily disconnected to install bearing anchor rods.
11. DO NOT place shear connectors on top lateral bracing bolted connections. Move studs to 6" beyond extreme top lateral bracing bolt and space moved rows 6" min.
12. Curved girder segments do not meet the requirements for heat bending. Flanges shall be cut for horizontal curvature. Webs shall be cut for vertical girder camber.

FLANGE PLATE DIMENSIONS - UNIT 1

Girder	AA	BB	CC	DD	EE	FF	GG	HH	JJ	KK	LL	MM	WW
Girder 1	1 1/4" x 24"	1 1/4" x 24"	1 3/4" x 24"	1 3/4" x 27"	1 1/4" x 24"	1 1/4" x 27"	1 3/4" x 27"	1 3/4" x 30"	2 1/2" x 24"	2 1/2" x 27"	2 1/2" x 27"	2 1/2" x 30"	1 1/4" x 11"
Girder 2	1 1/4" x 24"	1 1/4" x 24"	1 3/4" x 24"	1 3/4" x 27"	1 1/4" x 24"	1 1/4" x 27"	1 3/4" x 27"	1 3/4" x 30"	2 1/2" x 24"	2 1/2" x 27"	2 1/2" x 27"	2 1/2" x 30"	1 1/4" x 11"
Girder 3	1" x 18"	1" x 18"	1 3/4" x 21"	1 3/4" x 21"	1 3/4" x 18"	1 3/4" x 18"	1 3/4" x 21"	1 3/4" x 24"	2 1/2" x 21"	2 1/2" x 21"	2 1/2" x 21"	2 1/2" x 24"	1" x 8"

GIRDER DIMENSIONS - UNIT 1

Girder	L	L1	L2	L3	L4	a	b	c	d	e	f	g	h	j	k	l	m	n	p	q	r
Girder 1	745'-4 3/16"	112'-1 15/16"	103'-6"	117'-6 1/8"	119'-0 11/16"	50'-2 15/16"	53'-3 1/16"	73'-4 3/16"	45'-8 7/16"	13'-4"	13'-11"	17'-0"	15'-6"	21'-8 1/2"	9'-10"	8'-5"	18'-5"	22'-1 1/2"	10'-1 7/16"	9'-4 1/8"	19'-10 3/16"
Girder 2	748'-8 1/8"	112'-4 7/8"	103'-6"	117'-6 1/8"	119'-0 11/16"	50'-0"	53'-6"	73'-1 1/4"	45'-11 3/8"	13'-1"	14'-2"	16'-9"	15'-9"	21'-7"	9'-8 1/2"	8'-6 1/2"	18'-6 1/2"	22'-0 1/16"	10'-0"	9'-5 3/8"	19'-11 11/16"
Girder 3	752'-0 1/8"	112'-7 13/16"	103'-6"	117'-6 1/8"	119'-0 11/16"	49'-9 1/16"	53'-8 15/16"	72'-10 5/16"	46'-2 5/16"	12'-10"	14'-5"	16'-6"	16'-0"	21'- 5 9/16"	9'-7 1/16"	8'-7 15/16"	18'-7 15/16"	21'-10 9/16"	9'-10 1/2"	9'-7 1/16"	20'-1 1/8"

Michael Baker INTERNATIONAL
200 W Adams Street
Suite 1800
Chicago, IL 60606
PH: 312.707.8770
FAX: 312.707.8804

USER NAME = DLamb	DESIGNED - JMK	REVISED -	
	CHECKED - XW	REVISED -	
PLOT SCALE = 0.1667 ' / in.	DRAWN - DMJ	REVISED -	
PLOT DATE = 8/6/2023	CHECKED - XW	REVISED -	

STATE OF ILLINOIS
DEPARTMENT OF TRANSPORTATION

GIRDER ELEVATION 1
STRUCTURE NO. 090-0182

SHEET S-103 OF S-194 SHEETS

F.A.P. RTE.	SECTION	COUNTY	TOTAL SHEETS	SHEET NO.
VAR.	13 (HVB, HB-3) BR-1;R	TAZEWELL	1173	629
		CONTRACT NO. 68C55		
		ILLINOIS FED. AID PROJECT		

MODEL: Default
FILE NAME: pw:\\mbs-us-sv.bentley.com:mbs-is-pw-03\Documents\Chicago IL\01 Projects\179740 IDOT Cedar-SE\4 PH1\5.0 CADD\CAD_Sheets\0900182-68C55-103-GirderElev.dgn

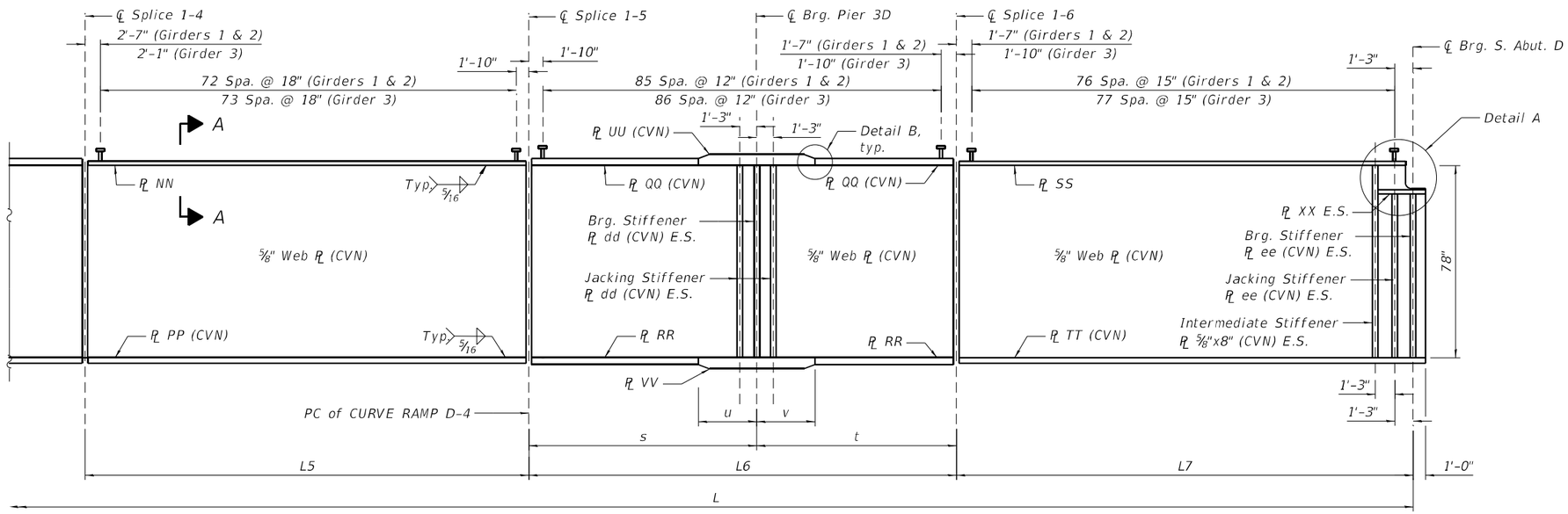

GIRDER ELEVATION - UNIT 1

(Girder 1, 2, and 3)

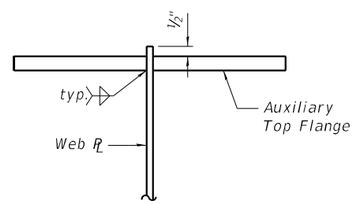

VIEW B-B

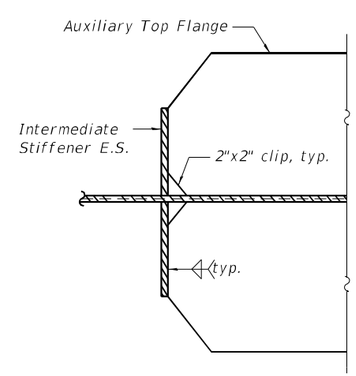

SECTION C-C

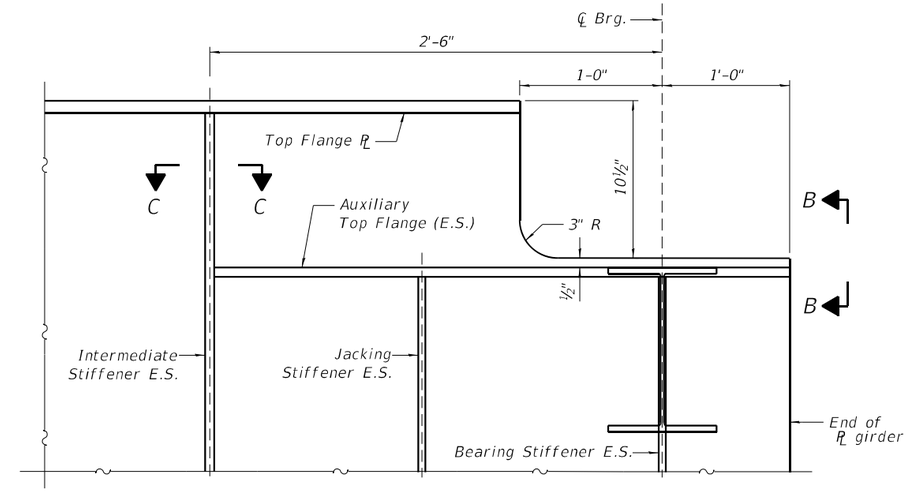

DETAIL A

STIFFENER PLATE DIMENSIONS - UNIT 1

Girder	dd	ee
Girder 1	1" x 8"	1" x 8"
Girder 2	1" x 8"	1" x 8"
Girder 3	1" x 8"	1" x 8"

FLANGE PLATE DIMENSIONS - UNIT 1

Girder	NN	PP	QQ	RR	SS	TT	UU	VV	XX
Girder 1	1¼" x 17"	1¼" x 17"	1¾" x 17"	1¾" x 17"	1" x 17"	1" x 17"	2½" x 17"	2½" x 17"	1" x 8"
Girder 2	1¼" x 17"	1¼" x 17"	1¾" x 17"	1¾" x 17"	1" x 17"	1" x 17"	2½" x 17"	2½" x 17"	1" x 8"
Girder 3	1" x 17"	1" x 17"	1¾" x 17"	1¾" x 21"	1¼" x 17"	1¾" x 21"	2½" x 17"	2½" x 21"	1¼" x 8"

GIRDER DIMENSIONS - UNIT 1

Girder	L	L5	L6	L7	s	t	u	v
Girder 1	745'-4 3/16"	108'-2½"	89'-10⅛"	95'-0 13/16"	42'-3⅜"	47'-6¾"	11'-11"	10'-2"
Girder 2	748'-8⅛"	108'-2½"	91'-4¼"	96'-7¾"	42'-11 13/16"	48'-4 7/16"	12'-1"	10'-4"
Girder 3	752'-0⅛"	108'-2½"	92'-10⅜"	98'-2 11/16"	43'-8 5/16"	49'-2 1/16"	12'-3"	10'-6"

NOTES:

1. See sheet S-103 for typical notes.
2. See sheet S-103 for Section A-A for Detail B.

Michael Baker INTERNATIONAL
200 W Adams Street
Suite 1800
Chicago, IL 60606
PH: 312.707.8770
FAX: 312.707.8804

USER NAME = DLamb	DESIGNED - JMK	REVISED -	
	CHECKED - XW	REVISED -	
PLOT SCALE = 0.1667 ' / in.	DRAWN - DMJ	REVISED -	
PLOT DATE = 6/6/2023	CHECKED - XW	REVISED -	

STATE OF ILLINOIS
DEPARTMENT OF TRANSPORTATION

GIRDER ELEVATION 2
STRUCTURE NO. 090-0182

SHEET S-104 OF S-194 SHEETS

F.A.P. RTE.	SECTION	COUNTY	TOTAL SHEETS	SHEET NO.
VAR.	13 (HVB, HB-3) 8R-1:R	TAZEWELL	1173	630
		CONTRACT NO. 68C55		
	ILLINOIS	FED. AID PROJECT		

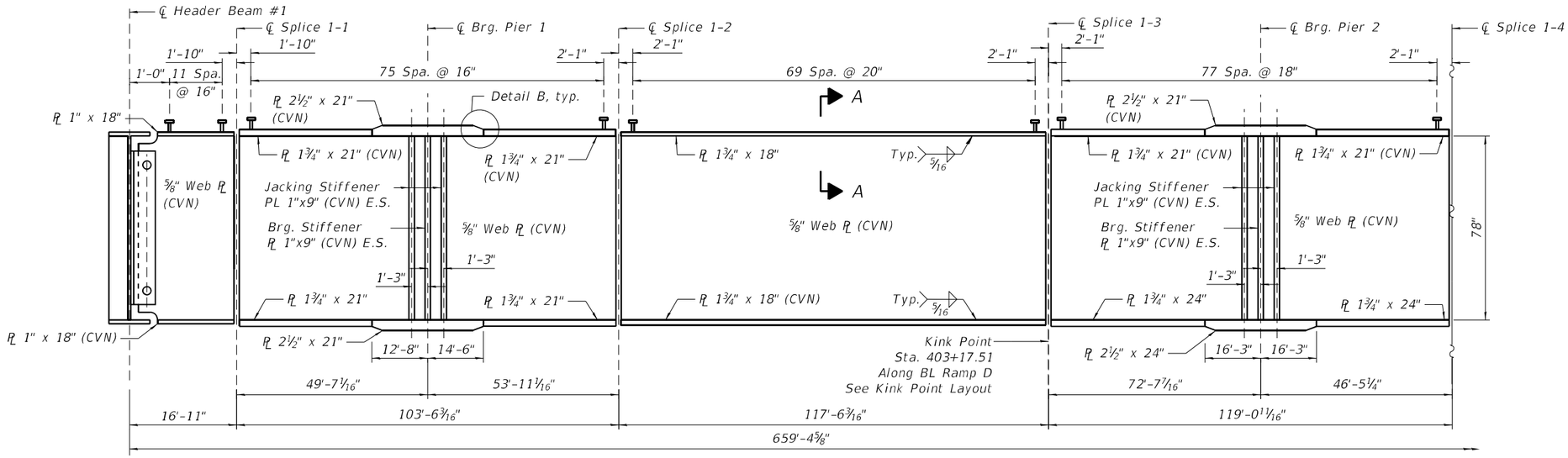

GIRDER ELEVATION - UNIT 1

(Girder 4)

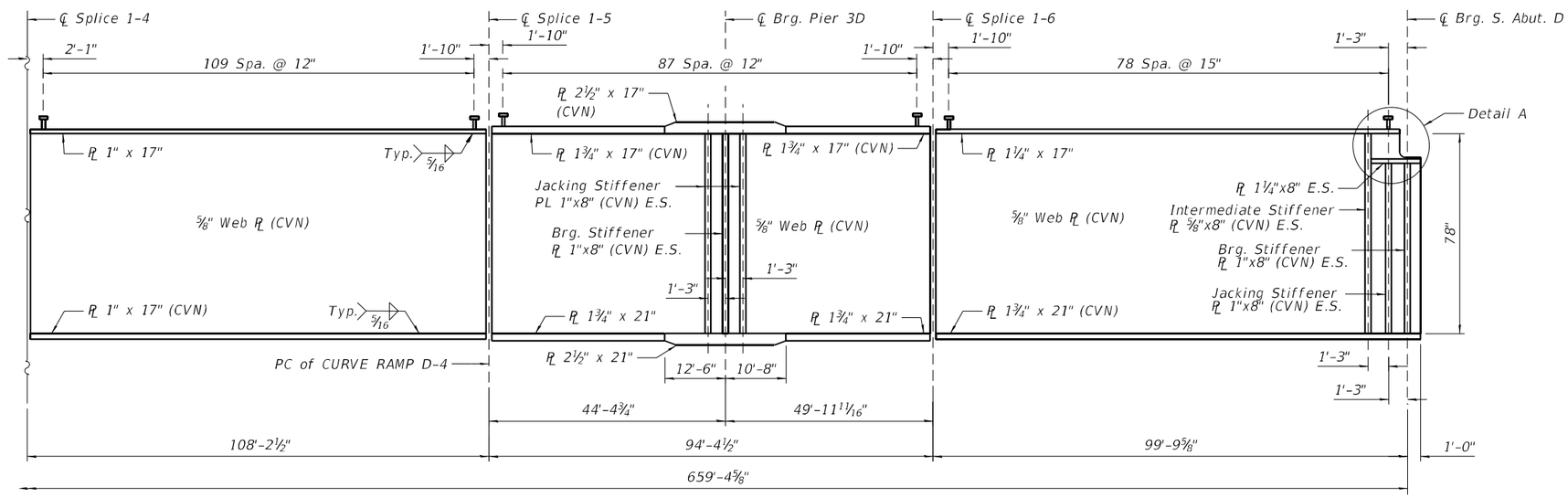

GIRDER ELEVATION - UNIT 1

(Girder 4)

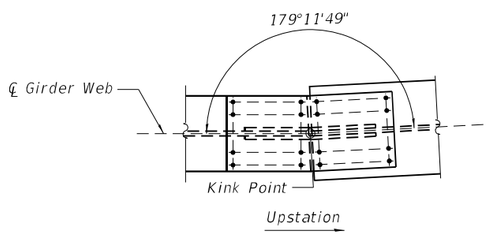

KINK POINT LAYOUT

(Girder 4)

NOTES:

1. See sheet S-103 for typical notes.
2. See sheet S-103 for Section A-A for Detail B.
3. See sheet S-104 for Detail A.

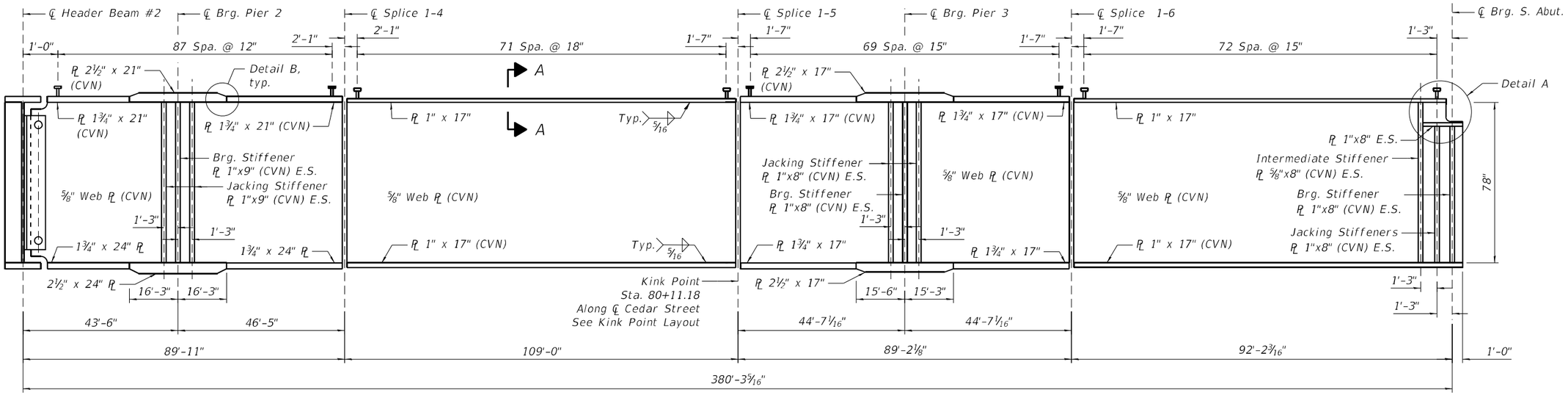

GIRDER ELEVATION - UNIT 1

(Girder 5)

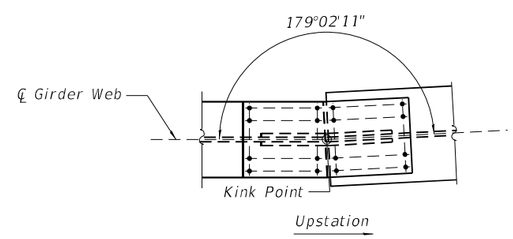

KINK POINT LAYOUT

(Girder 5)

NOTES:

1. See sheet S-103 for typical notes.
2. See sheet S-103 for Section A-A for Detail B.
3. See sheet S-104 for Detail A.

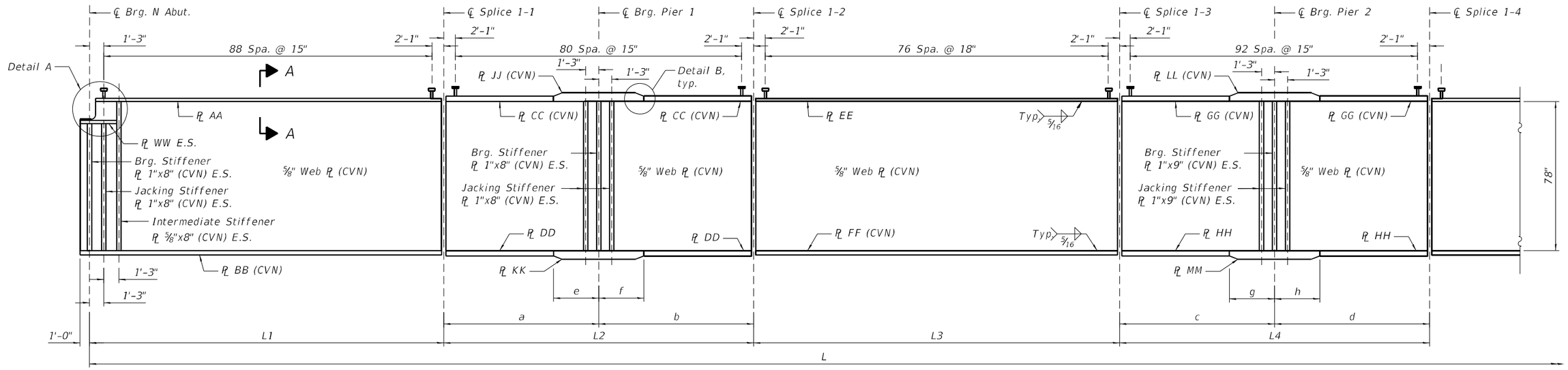

GIRDER ELEVATION - UNIT 1

(Girder 6, 7, and 8)

FLANGE PLATE DIMENSIONS - UNIT 1

Girder	AA	BB	CC	DD	EE	FF	GG	HH	JJ	KK	LL	MM	WW
Girder 6	1" x 18"	1" x 18"	1¾" x 18"	1¾" x 21"	1¼" x 18"	1¼" x 21"	1¾" x 21"	1¾" x 24"	2½" x 18"	2½" x 21"	2½" x 21"	2½" x 24"	1" x 8"
Girder 7	1" x 18"	1" x 18"	1¾" x 18"	1¾" x 21"	1¼" x 18"	1¼" x 21"	1¾" x 21"	1¾" x 24"	2½" x 18"	2½" x 21"	2½" x 21"	2½" x 24"	1" x 8"
Girder 8	1" x 18"	1" x 18"	1¾" x 18"	1¾" x 21"	1¼" x 18"	1¼" x 21"	1¾" x 21"	1¾" x 24"	2½" x 18"	2½" x 21"	2½" x 21"	2½" x 24"	1" x 8"

GIRDER DIMENSIONS - UNIT 1

Girder	L	L1	L2	L3	L4	a	b	c	d	e	f	g	h
Girder 6	743'-1"	112'-9"	103'-6"	117'-6"	119'-0"	49'-7"	53'-11"	72'-7"	46'-5"	12'-8"	14'-6"	16'-3"	16'-3"
Girder 7	743'-1"	112'-9"	103'-6"	117'-6"	119'-0"	49'-7"	53'-11"	72'-7"	46'-5"	12'-8"	14'-6"	16'-3"	16'-3"
Girder 8	743'-1"	112'-9"	103'-6"	117'-6"	119'-0"	49'-7"	53'-11"	72'-7"	46'-5"	12'-8"	14'-6"	16'-3"	16'-3"

NOTES:

1. See sheet S-103 for typical notes.
2. See sheet S-103 for Section A-A for Detail B.
3. See sheet S-104 for Detail A.

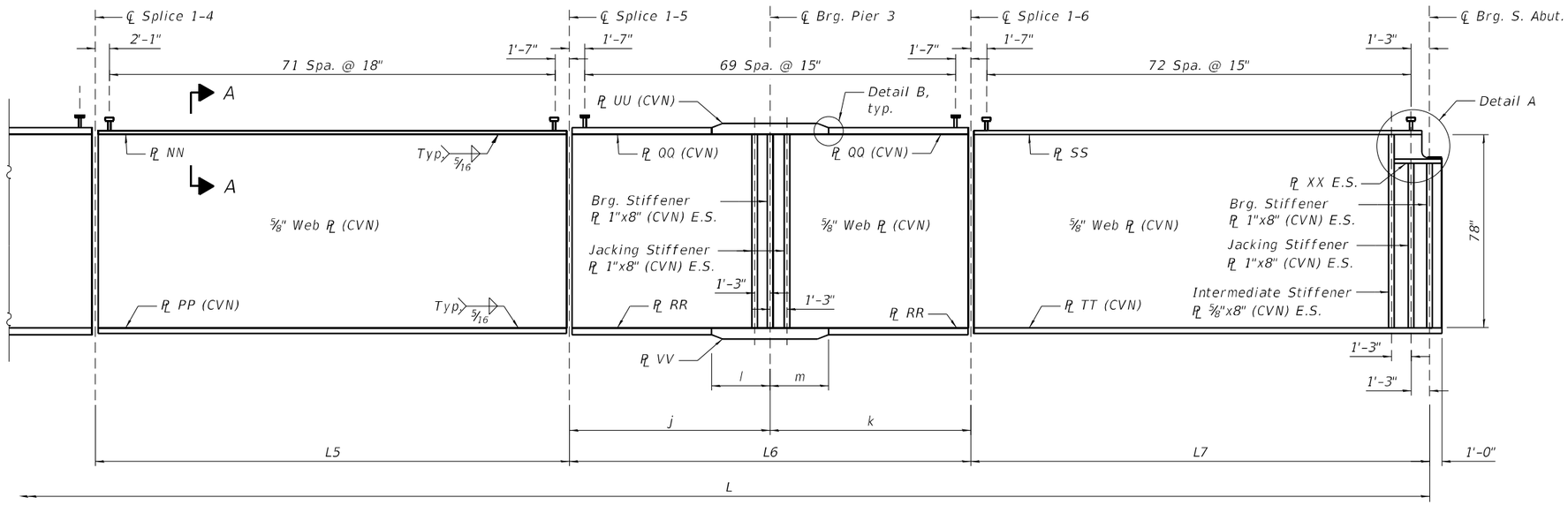

GIRDER ELEVATION - UNIT 1

(Girder 6, 7, and 8)

FLANGE PLATE DIMENSIONS - UNIT 1

Girder	NN	PP	QQ	RR	SS	TT	UU	VV	XX
Girder 6	1" x 17"	1" x 17"	1¾" x 17"	1¾" x 17"	1" x 17"	1" x 17"	2½" x 17"	2½" x 17"	1" x 8"
Girder 7	1" x 17"	1" x 17"	1¾" x 17"	1¾" x 17"	1" x 17"	1" x 17"	2½" x 17"	2½" x 17"	1" x 8"
Girder 8	1" x 17"	1" x 17"	1¾" x 17"	1¾" x 17"	1" x 17"	1" x 17"	2½" x 17"	2½" x 17"	1" x 8"

GIRDER DIMENSIONS - UNIT 1

Girder	L	L5	L6	L7	j	k	l	m
Girder 6	743'-1"	109'-0"	89'-2"	92'-2"	44'-7"	44'-7"	15'-6"	15'-3"
Girder 7	743'-1"	109'-0"	89'-2"	92'-2"	44'-7"	44'-7"	15'-6"	15'-3"
Girder 8	743'-1"	109'-0"	89'-2"	92'-2"	44'-7"	44'-7"	15'-6"	15'-3"

NOTES:

1. See sheet S-103 for typical notes.
2. See sheet S-103 for Section A-A for Detail B.
3. See sheet S-104 for Detail A.

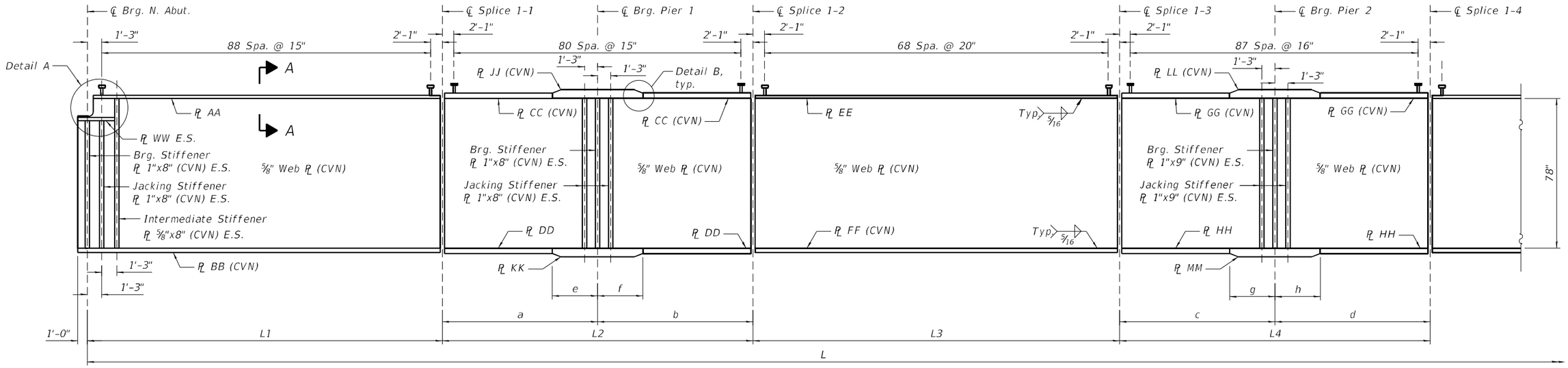

GIRDER ELEVATION - UNIT 1

(Girder 9, 10, and 11)

FLANGE PLATE DIMENSIONS - UNIT 1

Girder	AA	BB	CC	DD	EE	FF	GG	HH	JJ	KK	LL	MM	WW
Girder 9	1" x 18"	1" x 18"	1¾" x 18"	1¾" x 21"	1¼" x 18"	1¼" x 21"	1¾" x 21"	1¾" x 24"	2½" x 18"	2½" x 21"	2½" x 21"	2½" x 24"	1" x 8"
Girder 10	1" x 18"	1" x 18"	1¾" x 18"	1¾" x 21"	1¼" x 18"	1¼" x 21"	1¾" x 21"	1¾" x 24"	2½" x 18"	2½" x 21"	2½" x 21"	2½" x 24"	1" x 8"
Girder 11	1" x 18"	1" x 18"	1¾" x 18"	1¾" x 21"	1¼" x 18"	1¼" x 21"	1¾" x 21"	1¾" x 24"	2½" x 18"	2½" x 21"	2½" x 21"	2½" x 24"	1" x 8"

GIRDER DIMENSIONS - UNIT 1

Girder	L	L1	L2	L3	L4	a	b	c	d	e	f	g	h
Girder 9	743'-1"	112'-9"	103'-6"	117'-6"	119'-0"	49'-7"	53'-11"	72'-7"	46'-5"	12'-8"	14'-6"	16'-3"	16'-3"
Girder 10	743'-1"	112'-9"	103'-6"	117'-6"	119'-0"	49'-7"	53'-11"	72'-7"	46'-5"	12'-8"	14'-6"	16'-3"	16'-3"
Girder 11	743'-1"	112'-9"	103'-6"	117'-6"	119'-0"	49'-7"	53'-11"	72'-7"	46'-5"	12'-8"	14'-6"	16'-3"	16'-3"

NOTES:

1. See sheet S-103 for typical notes.
2. See sheet S-103 for Section A-A for Detail B.
3. See sheet S-104 for Detail A.

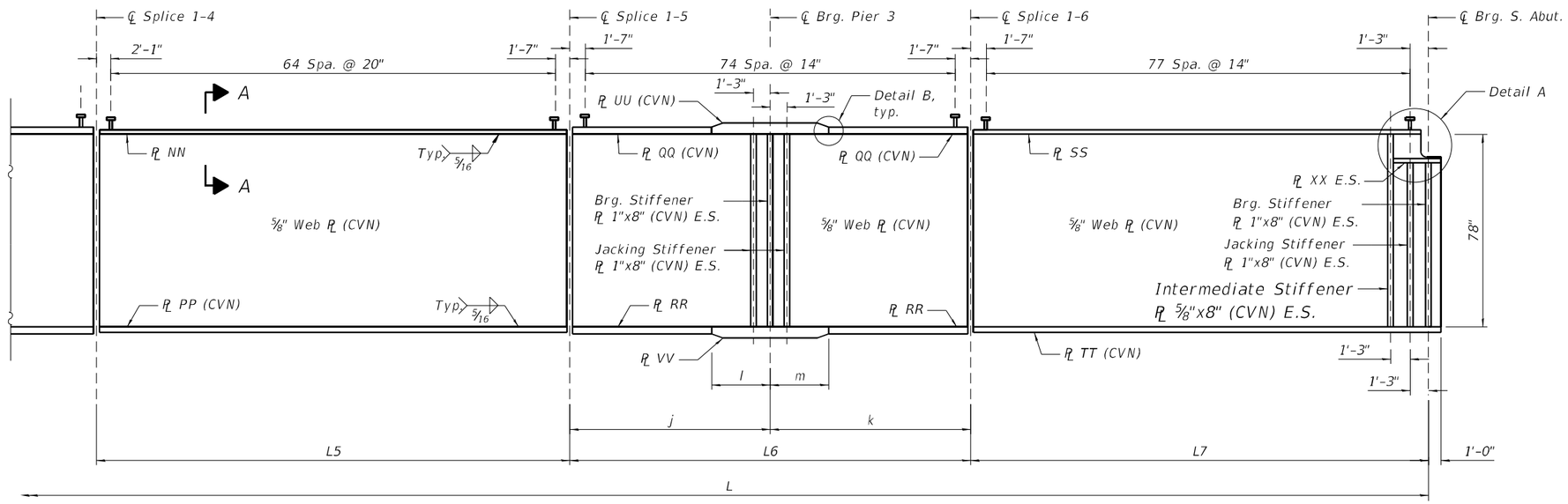

GIRDER ELEVATION - UNIT 1

(Girder 9, 10, and 11)

FLANGE PLATE DIMENSIONS - UNIT 1

Girder	NN	PP	QQ	RR	SS	TT	UU	VV	XX
Girder 9	1" x 17"	1" x 17"	1¾" x 17"	1¾" x 17"	1" x 17"	1" x 17"	2½" x 17"	2½" x 17"	1" x 8"
Girder 10	1" x 17"	1" x 17"	1¾" x 17"	1¾" x 17"	1" x 17"	1" x 17"	2½" x 17"	2½" x 17"	1" x 8"
Girder 11	1" x 17"	1" x 17"	1¾" x 17"	1¾" x 17"	1" x 17"	1" x 17"	2½" x 17"	2½" x 17"	1" x 8"

GIRDER DIMENSIONS - UNIT 1

Girder	L	L5	L6	L7	j	k	l	m
Girder 9	743'-1"	109'-0"	89'-2"	92'-2"	44'-7"	44'-7"	15'-6"	15'-3"
Girder 10	743'-1"	109'-0"	89'-2"	92'-2"	44'-7"	44'-7"	15'-6"	15'-3"
Girder 11	743'-1"	109'-0"	89'-2"	92'-2"	44'-7"	44'-7"	15'-6"	15'-3"

NOTES:

1. See sheet S-103 for typical notes.
2. See sheet S-103 for Section A-A for Detail B.
3. See sheet S-104 for Detail A.

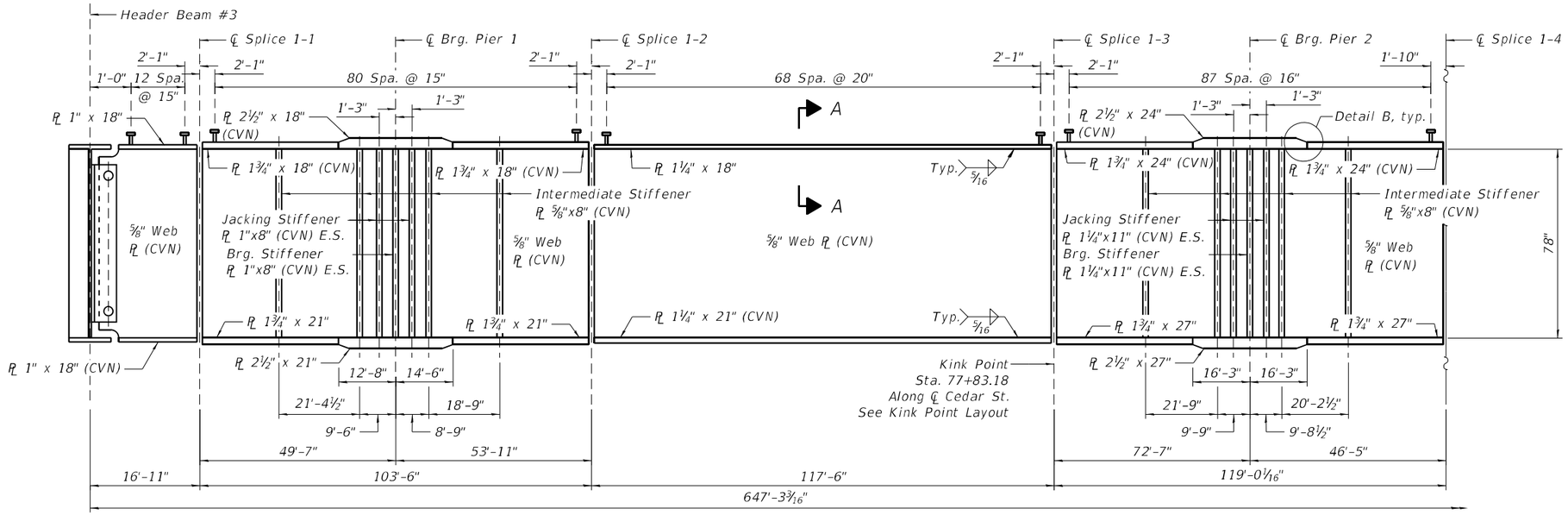

GIRDER ELEVATION - UNIT 1

(Girder 12)

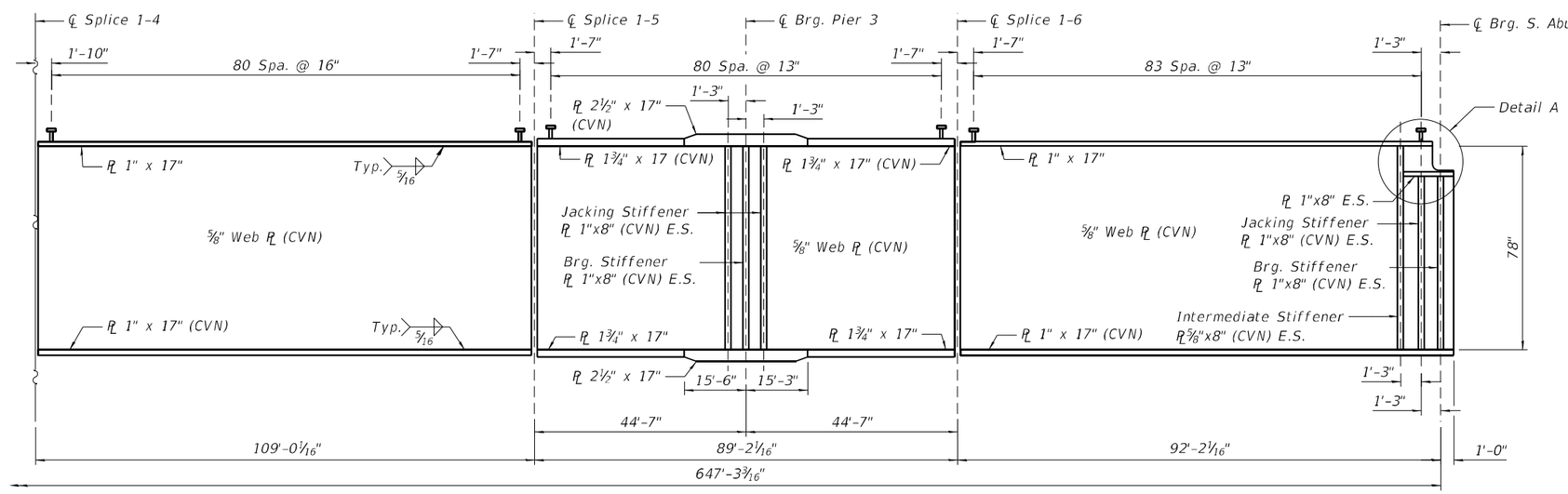

GIRDER ELEVATION - UNIT 1

(Girder 12)

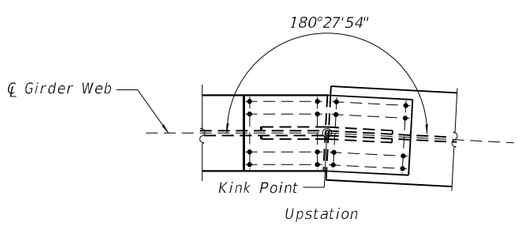

KINK POINT LAYOUT

(Girder 12)

NOTES:

1. See sheet S-103 for typical notes.
2. See sheet S-103 for Section A-A for Detail B.
3. See sheet S-104 for Detail A.

Michael Baker INTERNATIONAL
200 W Adams Street
Suite 1800
Chicago, IL 60606
P:+1 312.707.8770
FAX: 312.707.8804

USER NAME = DLamb	DESIGNED - JMK	REVISED -	
	CHECKED - XW	REVISED -	
PLOT SCALE = 0.1667 ' / in.	DRAWN - DMJ	REVISED -	
PLOT DATE = 6/6/2023	CHECKED - XW	REVISED -	

STATE OF ILLINOIS
DEPARTMENT OF TRANSPORTATION

GIRDER ELEVATION 9
STRUCTURE NO. 090-0182

SHEET S-111 OF S-194 SHEETS

F.A.P. RTE.	SECTION	COUNTY	TOTAL SHEETS	SHEET NO.
VAR.	13 (HVB, HB-3) BR-1;R	TAZEWELL	1173	637
		CONTRACT NO. 68C55		
	ILLINOIS	FED. AID PROJECT		

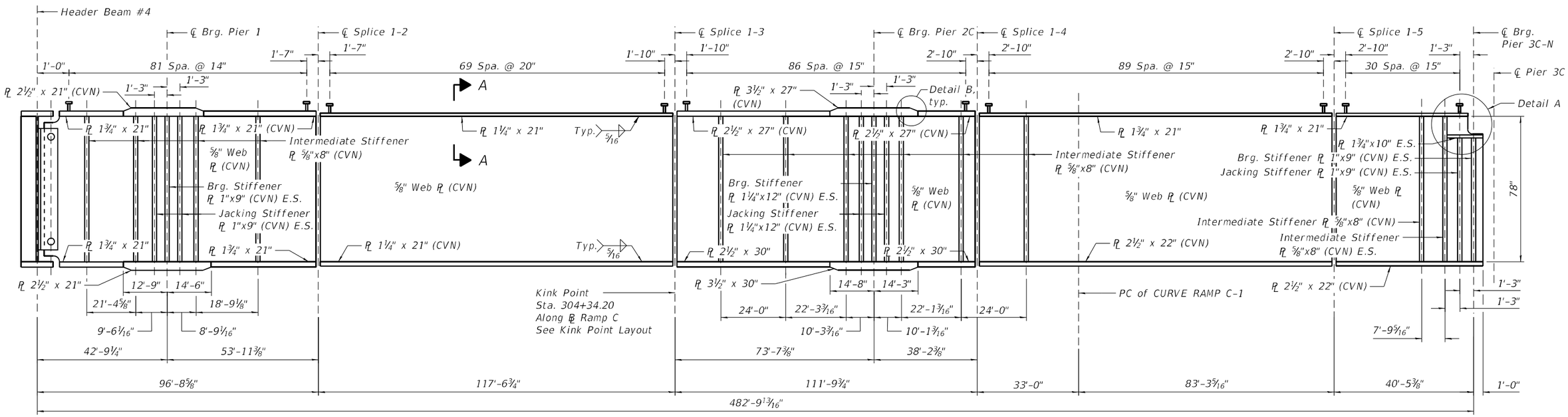

GIRDER ELEVATION - UNIT 1

(Girder 13)

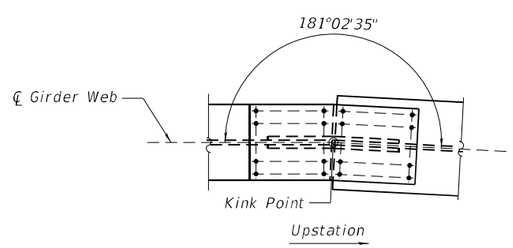

KINK POINT LAYOUT

(Girder 13)

NOTES:

1. See sheet S-103 for typical notes.
2. See sheet S-103 for Section A-A for Detail B.
3. See sheet S-104 for Detail A.

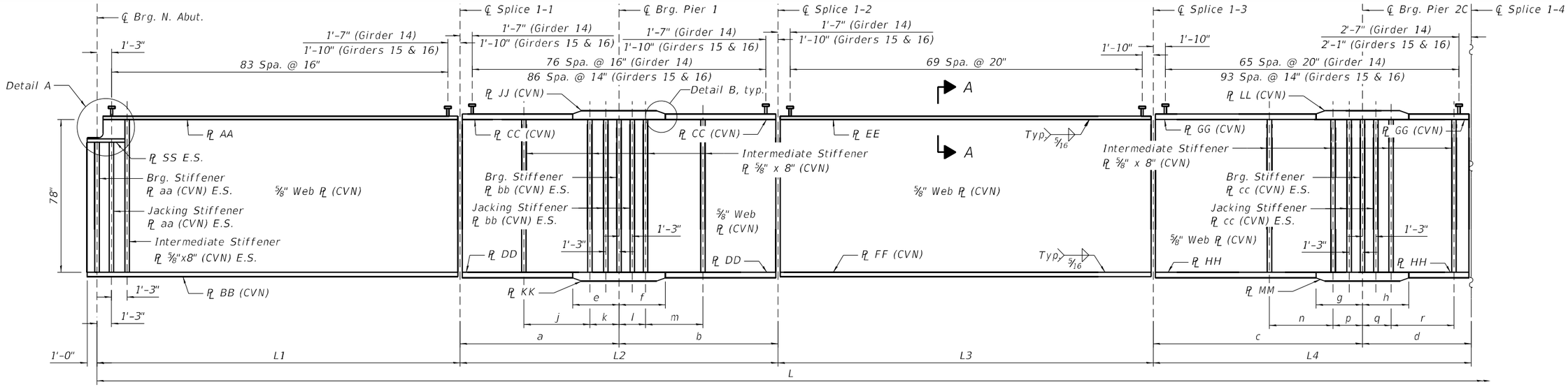

GIRDER ELEVATION - UNIT 1

(Girders 14, 15, and 16)

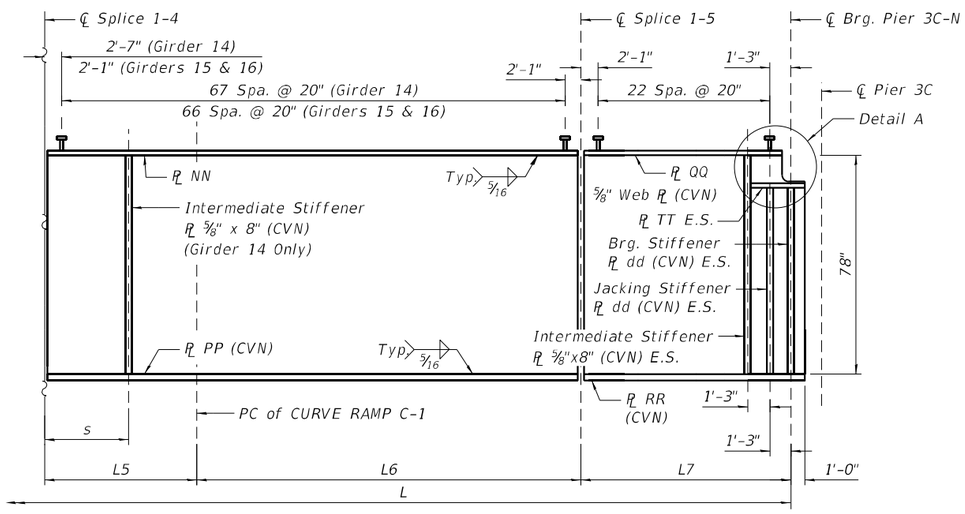

GIRDER ELEVATION - UNIT 1

(Girders 14, 15, and 16)

FLANGE PLATE DIMENSIONS - UNIT 1

Girder	AA	BB	CC	DD	EE	FF	GG	HH	JJ	KK	LL	MM	NN	PP	QQ	RR	SS	TT
Girder 14	1" x 21"	1" x 21"	1¾" x 21"	1¾" x 21"	1¼" x 21"	1¼" x 21"	2½" x 27"	2½" x 30"	2½" x 21"	2½" x 21"	3½" x 27"	3½" x 30"	1¾" x 21"	1¾" x 21"	1¾" x 21"	1¾" x 21"	1" x 10"	1¾" x 10"
Girder 15	1¼" x 24"	1¼" x 24"	1¾" x 24"	1¾" x 27"	1¼" x 24"	1¼" x 27"	1¾" x 27"	1¾" x 30"	2½" x 24"	2½" x 27"	2½" x 27"	2½" x 30"	1¾" x 21"	1¾" x 21"	1¾" x 21"	1¾" x 21"	1¼" x 11"	1¾" x 10"
Girder 16	1¼" x 24"	1¼" x 24"	1¾" x 24"	1¾" x 27"	1¼" x 24"	1¼" x 27"	1¾" x 27"	1¾" x 30"	2½" x 24"	2½" x 27"	2½" x 27"	2½" x 30"	1¾" x 21"	1¾" x 21"	1¾" x 21"	1¾" x 21"	1¼" x 11"	1¾" x 10"

GIRDER DIMENSIONS - UNIT 1

Girder	L	L1	L2	L3	L4	L5	L6	L7
Girder 14	600'-3 15/16"	112'-10 13/16"	103'-3 11/16"	117'-6 15/16"	111'-9¾"	33'-0"	81'-11⅛"	39'-9⅝"
Girder 15	597'-11"	112'-5 13/16"	103'-3 11/16"	117'-6 15/16"	111'-9¾"	33'-0"	80'-6⅞"	39'-1 15/16"
Girder 16	595'-6 1/16"	112'-0⅞"	103'-3 11/16"	117'-6 15/16"	111'-9¾"	33'-0"	79'-2⅝"	38'-6 3/16"

STIFFENER PLATE DIMENSIONS - UNIT 1

Girder	aa	bb	cc	dd
Girder 14	1" x 9"	1" x 9"	1¼" x 12"	1" x 9"
Girder 15	1¼" x 11"	1¼" x 11"	1¼" x 12"	1" x 9"
Girder 16	1¼" x 11"	1¼" x 11"	1¼" x 12"	1" x 9"

NOTES:

1. See sheet S-103 for typical notes.
2. See sheet S-103 for Section A-A for Detail B.
3. See sheet S-104 for Detail A.

Girder	a	b	c	d	e	f	g	h	j	k	l	m	n	p	q	r	s
Girder 14	49'-7 13/16"	53'-7⅞"	73'-7⅜"	38'-2⅜"	12'-8"	14'-6"	14'-8"	14'-3"	21'-4⅞"	9'-6⅛"	8'-7 7/16"	18'-7 7/16"	22'-3 3/16"	10'-3 3/16"	10'-1 3/16"	22'-1 3/16"	18'-0"
Girder 15	50'-0 13/16"	53'-2⅞"	73'-7⅜"	38'-2⅜"	12'-8"	14'-6"	14'-8"	14'-3"	21'-7 5/16"	9'-8⅝"	8'-4 15/16"	18'-4 15/16"	22'-3 3/16"	10'-3 3/16"	10'-1 3/16"	22'-1 3/16"	-
Girder 16	50'-5¾"	52'-9⅞"	73'-7⅜"	38'-2⅜"	12'-8"	14'-6"	14'-8"	14'-3"	21'-9 13/16"	9'-11⅛"	8'-2 1/16"	18'-2 1/16"	22'-3 3/16"	10'-3 3/16"	10'-1 3/16"	22'-1 3/16"	-

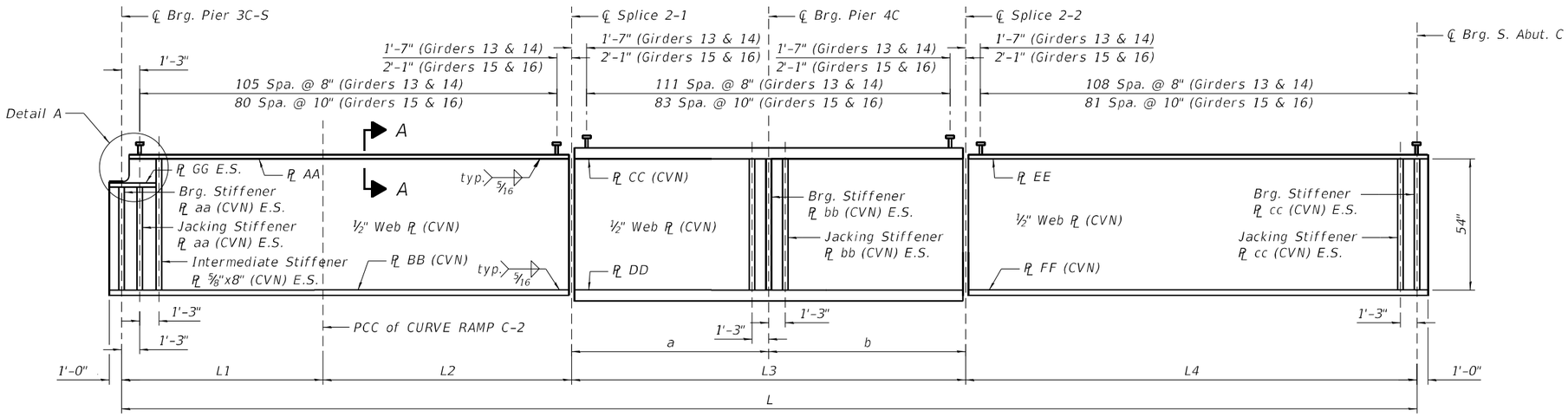

GIRDER ELEVATION - UNIT 2

(Girder 13, 14, 15, and 16)

FLANGE PLATE DIMENSIONS - UNIT 2

Girder	AA	BB	CC	DD	EE	FF	GG
13	1¼" x 21"	1¼" x 21"	1¾" x 21"	1¾" x 24"	1¼" x 21"	1¼" x 21"	1¼" x 10"
14	1¼" x 21"	1¼" x 21"	1¾" x 21"	1¾" x 24"	1¼" x 21"	1¼" x 21"	1¼" x 10"
15	1¼" x 18"	1¼" x 18"	1¾" x 18"	1¾" x 18"	1¼" x 18"	1¼" x 18"	1¼ x 8"
16	1¼" x 18"	1¼" x 18"	1¾" x 18"	1¾" x 18"	1¼" x 18"	1¼" x 18"	1¼ x 8"

STIFFENER DIMENSIONS - UNIT 2

Girder	aa	bb	cc
13	1" x 10"	1" x 10"	1" x 10"
14	1" x 10"	1" x 10"	1" x 10"
15	1" x 8"	1" x 8"	1" x 8"
16	1" x 8"	1" x 8"	1" x 8"

GIRDER DIMENSIONS - UNIT 2

Girder	L	L1	L2	L3	L4	a	b
Girder 13	222'-3 15/16"	39'-10 15/16"	32'-6 1/8"	76'-6 9/16"	73'-4 5/16"	38'-3 5/16"	38'-3 5/16"
Girder 14	216'-10 3/16"	39'-3"	31'-7 13/16"	74'-6 3/16"	71'-5 1/16"	37'-3 1/8"	37'-3 1/8"
Girder 15	211'-4 3/8"	38'-7"	30'-9 1/2"	72'-6 1/16"	69'-5 13/16"	36'-3"	36'-3"
Girder 16	205'-10 11/16"	37'-11 1/8"	29'-11 3/16"	70'-5 13/16"	67'-6 9/16"	35'-2 7/8"	35'-2 7/8"

NOTES:

1. See sheet S-103 for typical notes.
2. See sheet S-103 for Section A-A and Detail B.
3. See sheet S-104 for Detail A.

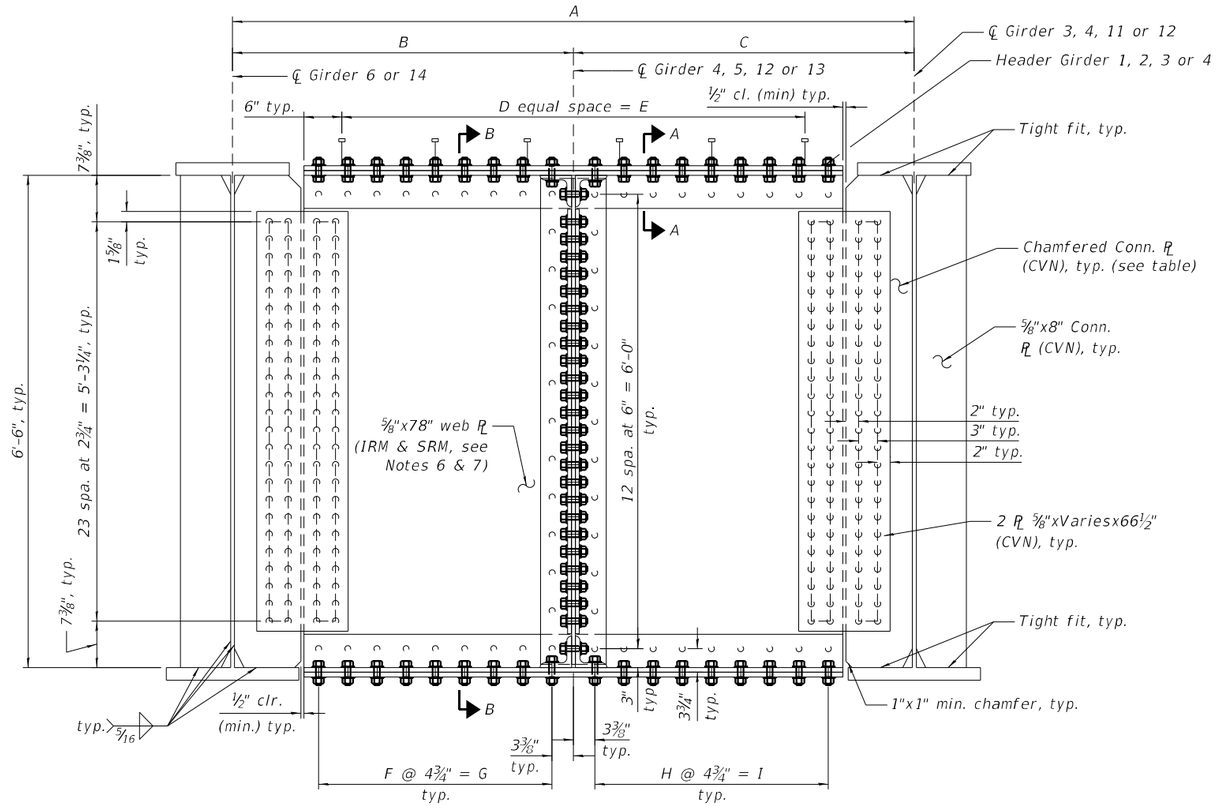

HEADER GIRDER ELEVATION

Looking downstation (Girders 4, 5, 12 & 13 not shown for clarity)

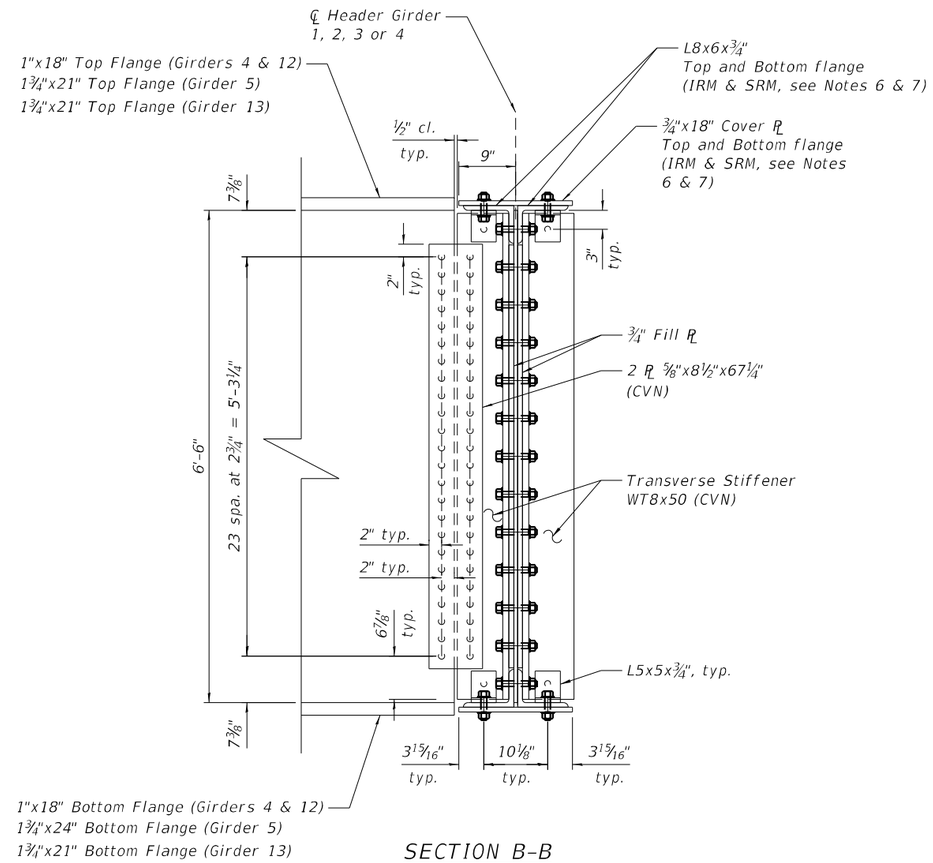

SECTION B-B

HEADER GIRDER DETAILS

Header Girder	Girder Number			Girder Spacing			Chamfered Conn. PL		Shear Studs		Flange Bolt Spacing			
	Left	Center	Right	A	B	C	Left	Right	D	E	F	G	H	I
1	6	4	3	9'-4"	4'-8"	4'-8"	⅝"x9"	⅝"x9"	7	6'-8⅜"	8	3'-2"	8	3'-2"
2	6	5	4	9'-5⅞"	4'-9 15/16"	4'-7 15/16"	⅝"x12"	⅝"x12"	7	6'-4¼"	8	3'-2"	8	3'-2"
3	14	12	11	11'-2 5/16"	6'-7 5/16"	4'-7"	⅝"x10½"	⅝"x9"	9	8'-5¼"	13	5'-1¾"	8	3'-2"
4	14	13	12	7'-10⅛"	3'-11 1/16"	3'-11 1/16"	⅝"x10½"	⅝"x10½"	5	4'-11½"	6	2'-4½"	6	2'-4½"

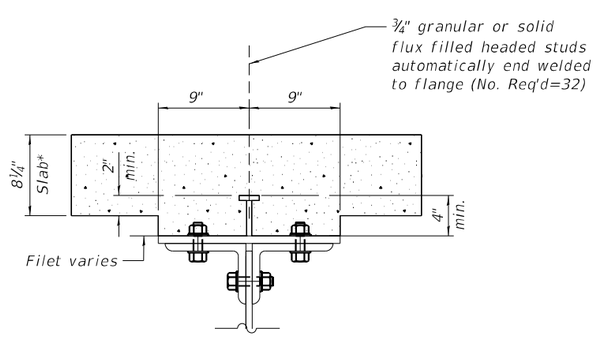

SECTION A-A

*prior to grinding

NOTES:

1. See sheet S-94 thru sheet S-102 for girder framing plan.
2. All structural steel shall be AASHTO M270 Grade 50.
3. "CVN" denotes Charpy-V-Notch impact energy requirements, zone 2.
4. All faying surfaces of bolted connections must meet the requirements for a Class C surface as defined by AASHTO.
5. See sheet S-135 for Chamfered Connection PL clip and weld termination details.
6. Members designated as "SRM" are System Redundant Members, and members designated as "IRM" are Internally Redundant Members.
7. Fabricated plate components of members noted as "SRM" or "IRM" shall satisfy the Fracture-Critical Tension Component Impact Test Requirements, zone 2 specified in AASHTO M 270M/M270 (ASTM A709/A709M).
8. Rolled section components of members noted as "SRM" or "IRM" shall satisfy the Non-Fracture Critical Tension Component Impact Test Requirements, zone 2 specified in AASHTO M 270M/M270 (ASTM A709/A709M).

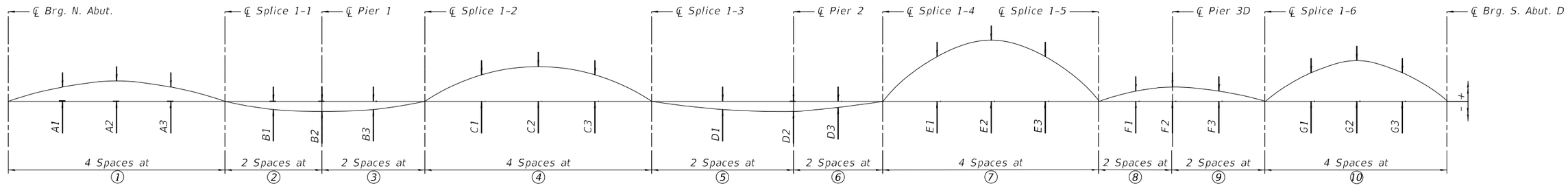

CAMBER DIAGRAM - UNIT 1

CAMBER ORDINATES - UNIT 1													
Girder	A1	A2	A3	B1	B2	B3	C1	C2	C3	①	②	③	④
1	1 3/4"	2 1/2"	1 3/4"	-1"	-1 1/4"	-1"	3 1/4"	4 1/4"	3 1/4"	28' - 0 1/2"	25' - 1 1/2"	26' - 7 1/2"	29' - 4 1/2"
2	1 3/4"	2 1/2"	1 3/4"	-1"	-1 1/4"	-1"	3 1/4"	4 1/4"	3 1/4"	28' - 1 1/4"	25' - 0"	26' - 7 1/2"	29' - 5 1/4"
3	1 3/4"	2 1/2"	1 3/4"	-1"	-1 1/4"	-1"	3 1/4"	4 1/4"	3 1/4"	28' - 2"	24' - 10 1/2"	26' - 7 1/2"	29' - 6"

CAMBER ORDINATES - UNIT 1									
Girder	D1	D2	D3	E1	E2	E3	⑤	⑥	⑦
1	-1"	-1 1/4"	- 3/4"	5 1/4"	7 1/2"	5 1/4"	36' - 8 1/8"	23' - 2"	27' -0 5/8"
2	-1"	-1 1/4"	- 3/4"	5"	7"	5"	36' - 6 5/8"	23' - 3 1/2"	27' -0 5/8"
3	-1"	-1 1/4"	- 3/4"	4 1/2"	6 1/2"	4 1/2"	36' - 5 1/8"	23' - 5"	27' -0 5/8"

CAMBER ORDINATES - UNIT 1									
Girder	F1	F2	F3	G1	G2	G3	⑧	⑨	⑩
1	1 1/4"	1 3/4"	1 1/4"	3 1/2"	5"	3 1/2"	20' -9 7/8"	24' - 1 1/8"	23' - 7 1/4"
2	1 1/2"	2"	1 1/2"	3 1/2"	5"	3 1/2"	21' -2 1/8"	24' - 6"	24' - 0"
3	1 3/4"	2 1/2"	1 3/4"	3 3/4"	5"	3 3/4"	21' -6 3/8"	24' - 10 7/8"	24' - 4 3/4"

*TOP OF WEB ELEVATION (FT) - UNIT 1										
Girder	℄ Brg. N.	℄ Splice 1-1	℄ Pier 1	℄ Splice 1-2	℄ Splice 1-3	℄ Pier 2	℄ Splice 1-4	℄ Splice 1-5	℄ Pier 3D	℄ Splice 1-6	℄ Brg. S. Abut.
1	486.45	488.94	490.12	491.58	494.38	495.70	496.70	498.39	498.16	497.58	494.87
2	486.61	489.10	490.28	491.75	494.55	495.86	496.87	498.68	498.58	498.10	495.35
3	486.79	489.29	490.43	491.88	494.67	496.02	497.07	499.00	499.01	498.58	495.80

*Top of web elevations are the elevations with no load applied to the girders (for fabrication use only)

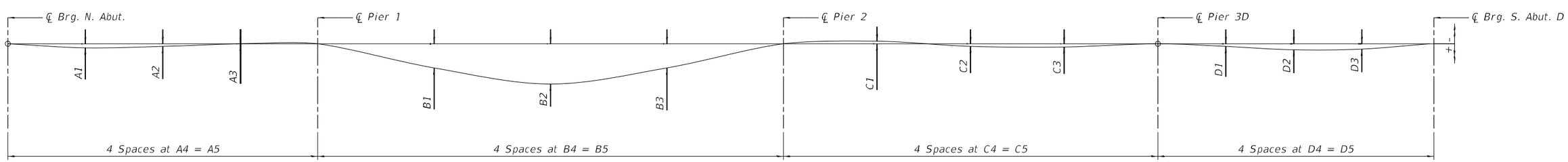

DEAD LOAD DEFLECTION DIAGRAM - UNIT 1

(Includes weight of structural steel only)

Girder No.	DEAD LOAD DEFLECTIONS																			
	SPAN 1					SPAN 2					SPAN 3					SPAN 4D				
	A1	A2	A3	A4	A5	B1	B2	B3	B4	B5	C1	C2	C3	C4	C5	D1	D2	D3	D4	D5
1	1/4"	1/8"	- 1/8"	40' -7 1/4"	162' -4 7/8"	1 1/2"	2 1/2"	1 1/2"	61' -0 3/8"	244' -1 3/8"	- 1/8"	1/4"	1/4"	49' -0 5/8"	196' -2 3/8"	1/8"	3/8"	3/8"	35' -7 7/8"	142' -7 1/2"
2	1/4"	1/8"	- 1/8"	40' -7 1/4"	162' -4 7/8"	1 1/2"	2 1/2"	1 1/2"	61' -0 3/8"	244' -1 3/8"	- 1/8"	1/4"	1/8"	49' -3 3/8"	197' -1 3/4"	1/4"	5/8"	1/2"	36' -3"	145' -0 1/8"
3	1/4"	1/8"	- 1/8"	40' -7 1/4"	162' -4 7/8"	1 5/8"	2 1/2"	1 1/2"	61' -0 3/8"	244' -1 3/8"	- 1/8"	1/4"	1/8"	49' -6 1/4"	198' -1 1/8"	3/8"	3/4"	5/8"	36' -10 1/4"	147' -4 7/8"

Note:
The calculated deflections of the primary girders/beams under steel self-weight shall be used to detail the diaphragm, cross frame and lateral bracing connections, and to erect the structural steel such that the girders/beams will be plumb within a tolerance of ±1/8 in. per vertical ft. throughout when supporting their own weight.

Michael Baker INTERNATIONAL
200 W Adams Street
Suite 1800
Chicago, IL 60606
P+1 312.707.8772
FAX: 312.707.8804

USER NAME = DLamb	DESIGNED - ADM	REVISED -	
	CHECKED - JMK	REVISED -	
PLOT SCALE = 0.1667 ' / in.	DRAWN - ADM/DMJ	REVISED -	
PLOT DATE = 6/6/2023	CHECKED - JMK	REVISED -	

STATE OF ILLINOIS
DEPARTMENT OF TRANSPORTATION

GIRDER CAMBER 1
STRUCTURE NO. 090-0182

SHEET S-116 OF S-194 SHEETS

F.A.P. RTE.	SECTION	COUNTY	TOTAL SHEETS	SHEET NO.
VAR.	13 (HVB, HB-3) BR-1:R	TAZEWELL	1173	642
		CONTRACT NO. 68C55		
	ILLINOIS	FED. AID PROJECT		

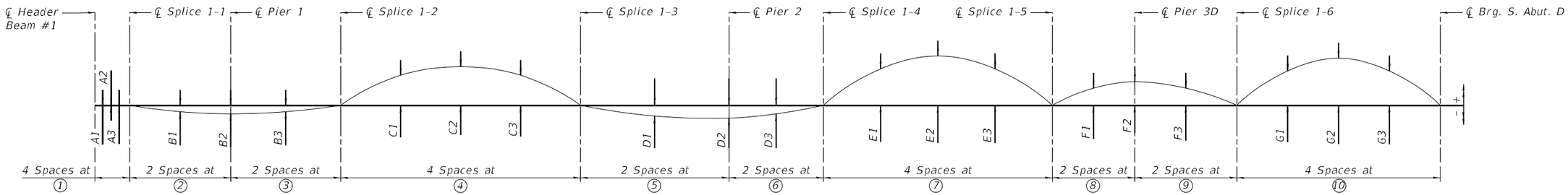

CAMBER DIAGRAM - UNIT 1

CAMBER ORDINATES - UNIT 1													
Girder	A1	A2	A3	B1	B2	B3	C1	C2	C3	①	②	③	④
4	0"	0"	0"	- ¾"	-1"	- ¾"	3 ½"	4 ½"	3 ½"	4' - 2¾"	24' - 9½"	26' - 11½"	29' -4½"

CAMBER ORDINATES - UNIT 1									
Girder	D1	D2	D3	E1	E2	E3	⑤	⑥	⑦
4	-1 ¼"	-1 ½"	-1"	4 ¼"	5 ¾"	4 ¼"	36' -3⅝"	23' -2⅝"	27' -0⅝"

CAMBER ORDINATES - UNIT 1									
Girder	F1	F2	F3	G1	G2	G3	⑧	⑨	⑩
4	2"	2 ¾"	2"	4"	5 ½"	4"	22' -2⅜"	24' - 11⅞"	24' - 11½"

*TOP OF WEB ELEVATION (FT) - UNIT 1											
Girder	℄ Header Beam #1	℄ Splice 1-1	℄ Pier 1	℄ Splice 1-2	℄ Splice 1-3	℄ Pier 2	℄ Splice 1-4	℄ Splice 1-5	℄ Pier 3D	℄ Splice 1-6	℄ Brg. S. Abut. D
4	489.15	489.34	490.54	492.01	494.83	496.17	497.23	499.29	499.43	499.11	496.29

*Top of web elevations are the elevations with no load applied to the girders (for fabrication use only)

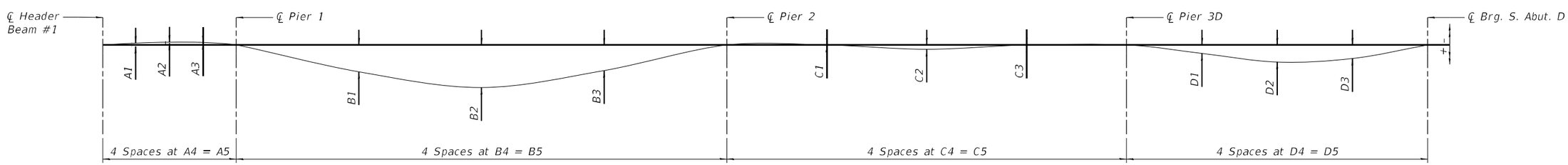

DEAD LOAD DEFLECTION DIAGRAM - UNIT 1

(Includes weight of structural steel only)

Girder No.	DEAD LOAD DEFLECTIONS																			
	SPAN 1					SPAN 2					SPAN 3					SPAN 4D				
	A1	A2	A3	A4	A5	B1	B2	B3	B4	B5	C1	C2	C3	C4	C5	D1	D2	D3	D4	D5
4	- ⅛"	- ⅛"	- ⅛"	16' - 7 ½"	66' - 6 ⅛"	1 ⅝"	2 ½"	1 ½"	61' - 0 ⅛"	244' - 0 ¾"	- ⅛"	¼"	⅛"	49' - 9 ⅛"	199' - 0 ½"	½"	1"	¾"	37' - 5 ⅜"	149' - 9 ⅝"

Note:
The calculated deflections of the primary girders/beams under steel self-weight shall be used to detail the diaphragm, cross frame and lateral bracing connections, and to erect the structural steel such that the girders/beams will be plumb within a tolerance of ±⅛ in. per vertical ft. throughout when supporting their own weight.

Michael Baker INTERNATIONAL
200 W Adams Street Suite 1800 Chicago, IL 60606 PH: 312.707.8770 FAX: 312.707.8804

USER NAME = DLamb	DESIGNED - ADM	REVISED -	
	CHECKED - JMK	REVISED -	
PLOT SCALE = 0.1667 ' / in.	DRAWN - ADM/DMJ	REVISED -	
PLOT DATE = 6/6/2023	CHECKED - JMK	REVISED -	

STATE OF ILLINOIS
DEPARTMENT OF TRANSPORTATION

GIRDER CAMBER 2
STRUCTURE NO. 090-0182

SHEET S-117 OF S-194 SHEETS

F.A.P. RTE.	SECTION	COUNTY	TOTAL SHEETS	SHEET NO.
VAR.	13 (HVB, HB-3) BR-1:R	TAZEWELL	1173	643
		CONTRACT NO. 68C55		
		ILLINOIS FED. AID PROJECT		

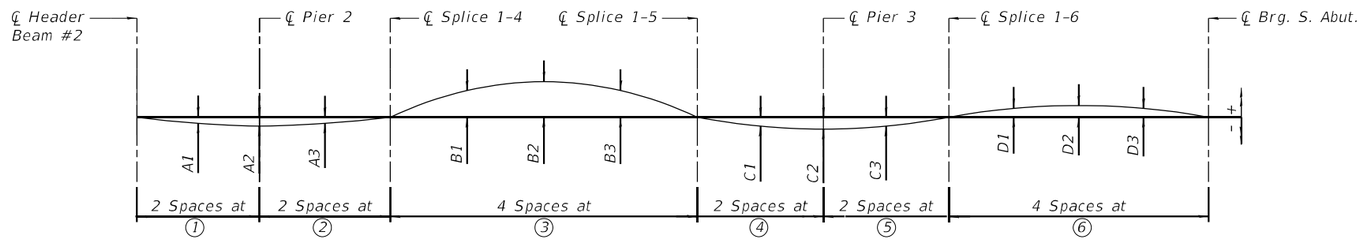

CAMBER DIAGRAM - UNIT 1

CAMBER ORDINATES - UNIT 1												
Girder	A1	A2	A3	B1	B2	B3	C1	C2	C3	D1	D2	D3
5	- ½"	- ¾"	- ½"	2 ¼"	3"	2 ¼"	- ¾"	-1"	- ¾"	1"	1 ½"	1"

CAMBER ORDINATES - UNIT 1						
Girder	1	2	3	4	5	6
5	21' - 9"	23' - 2½"	27' - 3"	22' - 4"	22' - 3"	23' - 0½"

TOP OF WEB ELEVATION (FT) - UNIT 1							
Girder	℄ Header Beam #2	℄ Pier 2	℄ Splice 1-4	℄ Splice 1-5	℄ Pier 3	℄ Splice 1-6	℄ Brg. S. Abut.
5	495.31	496.26	497.40	499.99	500.98	502.14	505.17

*Top of web elevations are the elevations with no load applied to the girders (for fabrication use only)

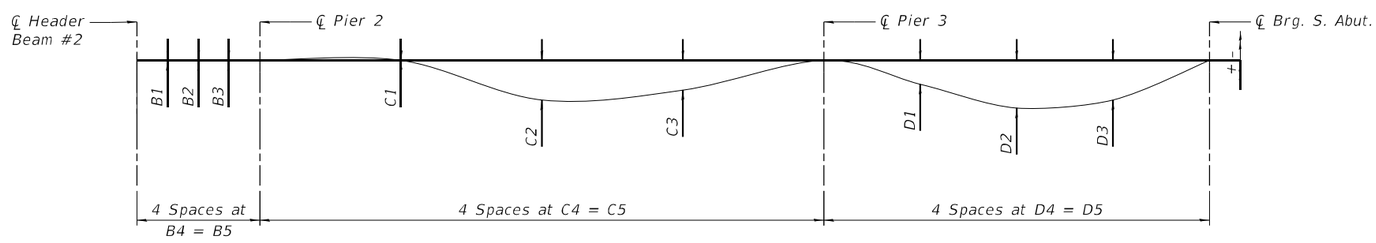

DEAD LOAD DEFLECTION DIAGRAM - UNIT 1

(Includes weightof structural steel only)

Girder No.	DEAD LOAD DEFLECTIONS														
	SPAN 2					SPAN 3					SPAN 4				
	B1	B2	B3	B4	B5	C1	C2	C3	C4	C5	D1	D2	D3	D4	D5
5	0"	- ⅛"	0"	10' - 10 ½"	43' - 6"	0"	¼"	¼"	50' - 0"	200' - 0 ⅛"	¼"	⅜"	⅜"	34' - 2 ¼"	136' - 9 ¼"

Note:
The calculated deflections of the primary girders/beams under steel self-weight shall be used to detail the diaphragm, cross frame and lateral bracing connections, and to erect the structural steel such that the girders/beams will be plumb within a tolerance of ±⅛ in. per vertical ft. throughout when supporting their own weight.

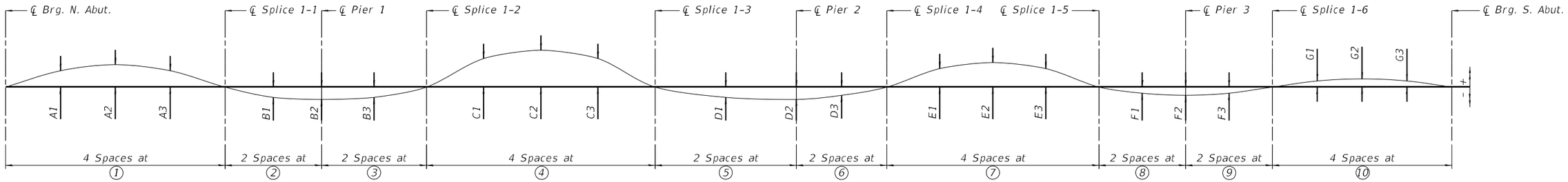

CAMBER DIAGRAM - UNIT 1

CAMBER ORDINATES - UNIT 1													
Girder	A1	A2	A3	B1	B2	B3	C1	C2	C3	①	②	③	④
6	2"	2 ¾"	2"	-1 ¼"	-1 ½"	-1 ¼"	3 ½"	4 ½"	3 ½"	28' - 2¼"	24' - 9½"	26' - 11½"	29' - 4½"
7	2"	2 ¾"	2"	-1 ¼"	-1 ½"	-1 ¼"	3 ½"	4 ½"	3 ½"	28' - 2¼"	24' - 9½"	26' - 11½"	29' - 4½"
8	2"	2 ¾"	2"	-1 ¼"	-1 ½"	-1 ¼"	3 ¼"	4 ¼"	3 ¼"	28' - 2¼"	24' - 9½"	26' - 11½"	29' - 4½"

CAMBER ORDINATES - UNIT 1									
Girder	D1	D2	D3	E1	E2	E3	⑤	⑥	⑦
6	-1 ¼"	-1 ½"	-1"	2 ¼"	3"	2 ¼"	36' - 3½"	23' - 2½"	27' - 3"
7	-1 ¼"	-1 ½"	-1"	2 ¼"	3"	2 ¼"	36' - 3½"	23' - 2½"	27' - 3"
8	-1 ¼"	-1 ½"	-1"	2 ¼"	3"	2 ¼"	36' - 3½"	23' - 2½"	27' - 3"

CAMBER ORDINATES - UNIT 1									
Girder	F1	F2	F3	G1	G2	G3	⑧	⑨	⑩
6	- ¾"	-1"	- ¾"	1"	1 ½"	1"	22' - 3½"	22' - 3½"	23' - 0½"
7	- ¾"	-1"	- ¾"	1"	1 ½"	1"	22' - 3½"	22' - 3½"	23' - 0½"
8	- ¾"	-1"	- ¾"	1"	1 ½"	1"	22' - 3½"	22' - 3½"	23' - 0½"

TOP OF WEB ELEVATION (FT) - UNIT 1										
Girder	℄ Brg. N. Abut.	℄ Splice 1-1	℄ Pier 1	℄ Splice 1-2	℄ Splice 1-3	℄ Pier 2	℄ Splice 1-4	℄ Splice 1-5	℄ Pier 3	℄ Splice 1-6	℄ Brg. S. Abut.
6	486.92	489.49	490.66	492.19	495.04	496.40	497.48	500.09	501.09	502.25	505.06
7	487.06	489.64	490.80	492.33	495.18	496.54	497.62	500.23	501.22	502.37	504.96
8	487.20	489.78	490.94	492.46	495.32	496.68	497.76	500.37	501.35	502.49	504.86

*Top of web elevations are the elevations with no load applied to the girders (for fabrication use only)

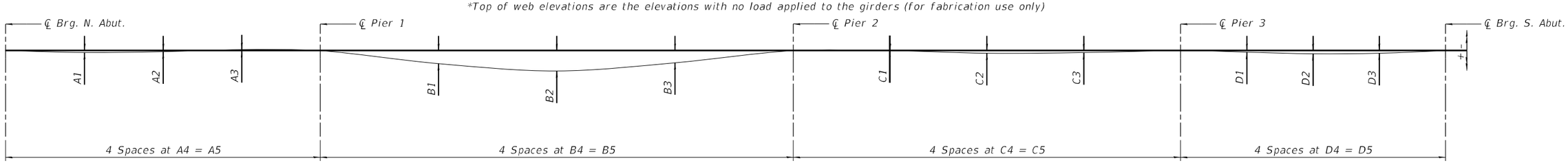

DEAD LOAD DEFLECTION DIAGRAM - UNIT 1

(Includes weight of structural steel only)

Girder No.	DEAD LOAD DEFLECTIONS																			
	SPAN 1					SPAN 2					SPAN 3					SPAN 4				
	A1	A2	A3	A4	A5	B1	B2	B3	B4	B5	C1	C2	C3	C4	C5	D1	D2	D3	D4	D5
6	¼"	⅛"	- ⅛"	40' - 7"	162' - 4"	1 ⅝"	2 ½"	1 ½"	61' - 0"	244' - 0"	0"	⅜"	¼"	50' - 0"	200' - 0"	⅛"	⅜"	⅜"	34' - 2 ¼"	136' - 9"
7	¼"	⅛"	- ⅛"	40' - 7"	162' - 4"	1 ⅝"	2 ½"	1 ½"	61' - 0"	244' - 0"	0"	⅜"	¼"	50' - 0"	200' - 0"	⅛"	⅜"	⅜"	34' - 2 ¼"	136' - 9"
8	¼"	⅛"	- ⅛"	40' - 7"	162' - 4"	1 ⅝"	2 ½"	1 ½"	61' - 0"	244' - 0"	0"	⅜"	¼"	50' - 0"	200' - 0"	⅛"	⅜"	⅜"	34' - 2 ¼"	136' - 9"

Note:

The calculated deflections of the primary girders/beams under steel self-weight shall be used to detail diaphragm, cross frames, and lateral bracing connections, and to erect the structural steel such that the girders/beams will be plumb within a tolerance of ±⅛ in. per veritcal ft. throughout when supporting their own weight.

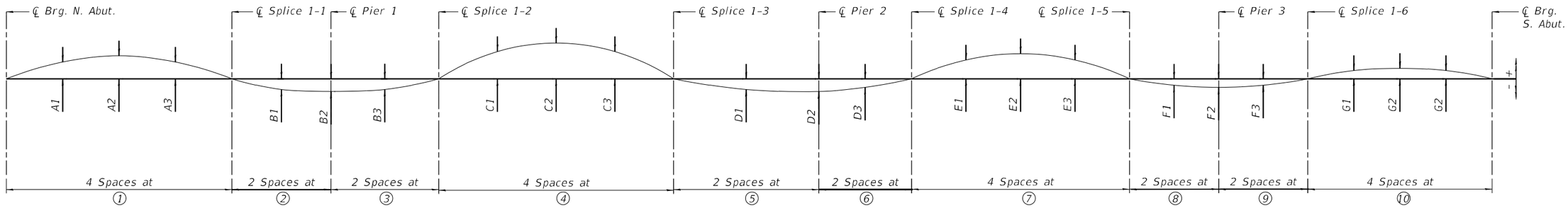

CAMBER DIAGRAM - UNIT 1

CAMBER ORDINATES - UNIT 1

Girder	A1	A2	A3	B1	B2	B3	C1	C2	C3	①	②	③	④
9	2"	2 ¾"	2"	-1 ¼"	-1 ½"	-1 ¼"	3 ¼"	4 ¼"	3 ¼"	28' - 2¼"	24' - 9½"	26' - 11½"	29' - 4½"
10	2"	2 ¾"	2"	-1 ¼"	-1 ½"	-1 ¼"	3 ¼"	4 ¼"	3 ¼"	28' - 2¼"	24' - 9½"	26' - 11½"	29' - 4½"
11	2"	2 ½"	2"	-1 ¼"	-1 ½"	-1 ¼"	3 ¼"	4 ¼"	3 ¼"	28' - 2¼"	24' - 9½"	26' - 11½"	29' - 4½"

CAMBER ORDINATES - UNIT 1

Girder	D1	D2	D3	E1	E2	E3	⑤	⑥	⑦
9	-1 ¼"	-1 ½"	-1"	2 ¼"	3"	2 ¼"	36' - 3½"	23' - 2½"	27' - 3"
10	-1 ¼"	-1 ½"	-1"	2 ¼"	3"	2 ¼"	36' - 3½"	23' - 2½"	27' - 3"
11	-1 ¼"	-1 ½"	-1"	2 ¼"	3"	2 ¼"	36' - 3½"	23' - 2½"	27' - 3"

CAMBER ORDINATES - UNIT 1

Girder	F1	F2	F3	G1	G2	G3	⑧	⑨	⑩
9	- ¾"	-1"	- ¾"	1"	1 ¼"	1"	22' - 3½"	22' - 3½"	23' - 0½"
10	- ¾"	-1"	- ¾"	1"	1 ¼"	1"	22' - 3½"	22' - 3½"	23' - 0½"
11	- ¾"	-1"	- ¾"	1"	1 ¾"	1"	22' - 3½"	22' - 3½"	23' - 0½"

*TOP OF WEB ELEVATION (FT) - UNIT 1

Girder	℄ Brg. N. Abut.	℄ Splice 1-1	℄ Pier 1	℄ Splice 1-2	℄ Splice 1-3	℄ Pier 2	℄ Splice 1-4	℄ Splice 1-5	℄ Pier 3	℄ Splice 1-6	℄ Brg. S. Abut.
9	487.20	489.77	490.94	492.47	495.33	496.68	497.75	500.37	501.34	502.48	504.73
10	487.06	489.63	490.79	492.32	495.17	496.54	497.62	500.23	501.20	502.34	504.59
11	486.92	489.49	490.65	492.17	495.02	496.40	497.48	500.10	501.07	502.21	504.45

*Top of web elevations are the elevations with no load applied to the girders (for fabrication use only)

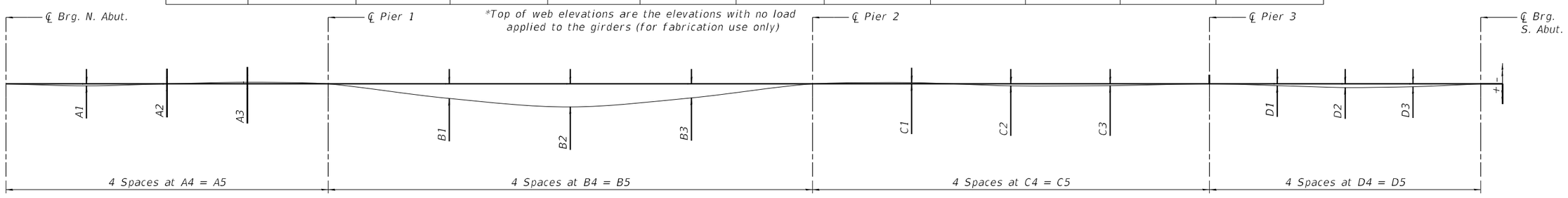

DEAD LOAD DEFLECTION DIAGRAM - UNIT 1

(Includes weight of structural steel only)

DEAD LOAD DEFLECTIONS

Girder No.	SPAN 1					SPAN 2					SPAN 3					SPAN 4				
	A1	A2	A3	A4	A5	B1	B2	B3	B4	B5	C1	C2	C3	C4	C5	D1	D2	D3	D4	D5
9	⅛"	0"	- ¼"	40' -7"	162' -4"	1 ¾"	2 ¾"	1 ⅝"	61' -0"	244' -0"	- ⅛"	¼"	¼"	50' - 0"	200' - 0"	¼"	⅜"	⅜"	34' - 2 ¼"	136' - 9"
10	¼"	0"	- ¼"	40' -7"	162' -4"	1 ⅝"	2 ⅝"	1 ⅝"	61' -0"	244' -0"	- ⅛"	¼"	¼"	50' - 0"	200' - 0"	¼"	⅜"	⅜"	34' - 2 ¼"	136' - 9"
11	¼"	⅛"	- ⅛"	40' -7"	162' -4"	1 ⅝"	2 ⅝"	1 ½"	61' -0"	244' -0"	- ⅛"	¼"	¼"	50' - 0"	200' - 0"	¼"	⅜"	⅜"	34' - 2 ¼"	136' - 9"

Note:

The calculate deflections of the primary girders/beams under steel self-weight shall be used to detail the diaphragm, cross frame and lateral bracing connections, and to erect the structural steel such that the girders/beams will be plumb within a tolerance of ±⅛ in. per vertical ft. throughout when supporting their own weight.

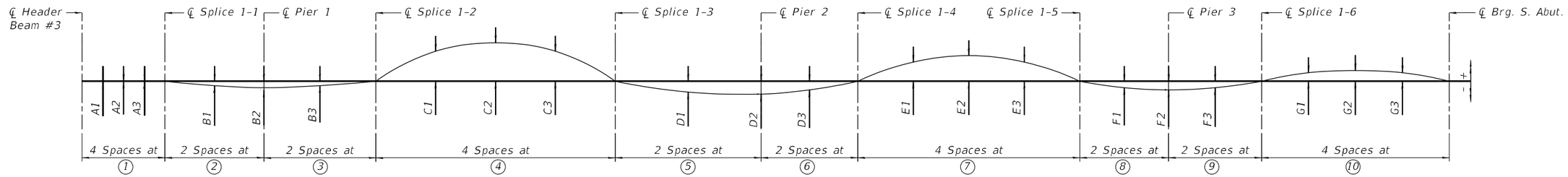

CAMBER DIAGRAM - UNIT 1

CAMBER ORDINATES - UNIT 1													
Girder	A1	A2	A3	B1	B2	B3	C1	C2	C3	1	2	3	4
12	0"	0"	0"	- ¾"	-1"	- ¾"	3 ¼"	4 ¼"	3 ¼"	4' -2¾"	24' -9½"	26' -11½"	29' -4½"

CAMBER ORDINATES - UNIT 1									
Girder	D1	D2	D3	E1	E2	E3	5	6	7
12	-1 ¼"	-1 ½"	-1"	2 ¼"	3"	2 ¼"	36' -3½"	23' -2½"	27' -3"

CAMBER ORDINATES - UNIT 1									
Girder	F1	F2	F3	G1	G2	G3	8	9	10
12	- ¾"	-1"	- ¾"	1"	1 ¼"	1"	22' -3½"	22' -3½"	23' -0½"

*TOP OF WEB ELEVATION (FT) - UNIT 1											
Girder	℄ Header Beam #3	℄ Splice 1-1	℄ Pier 1	℄ Splice 1-2	℄ Splice 1-3	℄ Pier 2	℄ Splice 1-4	℄ Splice 1-5	℄ Pier 3	℄ Splice 1-6	℄ Brg. S. Abut.
12	489.15	489.35	490.58	492.09	494.92	496.28	497.35	499.97	500.93	502.07	504.30

*Top of web elevations are the elevations with no load applied to the girders (for fabrication use only)

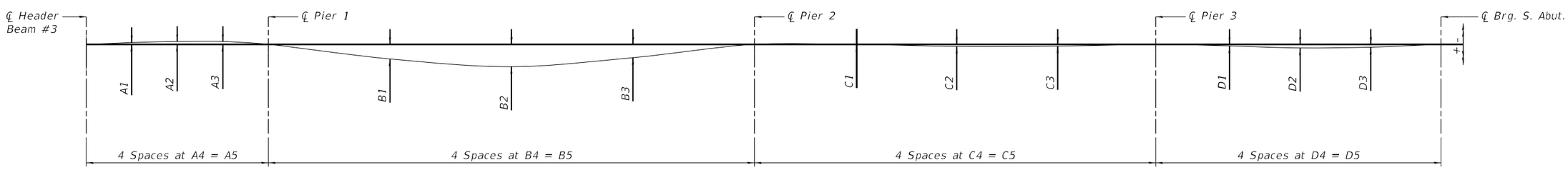

DEAD LOAD DEFLECTION DIAGRAM - UNIT 1

(Includes weight of structural steel only)

Girder No.	DEAD LOAD DEFLECTIONS																			
	SPAN 1					SPAN 2					SPAN 3					SPAN 4				
	A1	A2	A3	A4	A5	B1	B2	B3	B4	B5	C1	C2	C3	C4	C5	D1	D2	D3	D4	D5
12	- ⅛"	- ¼"	- ⅛"	16' -7 ½"	66' -6"	1 ⅝"	2 ½"	1 ½"	61' -0"	244' -0"	- ⅛"	¼"	¼"	50' -0"	200' -0 ⅛"	¼"	⅜"	⅜"	34' -2 ¼"	136' -9"

Note:
The calculated deflections of primary girders/beams under steel self-weight shall be used to detail the diaphragms, cross frames and lateral bracing connections, and to erect the structural steel such that the girders/beams will be plumb within a tolerance of ±⅛ in. per vertical ft. throughout when supporting their own weight.

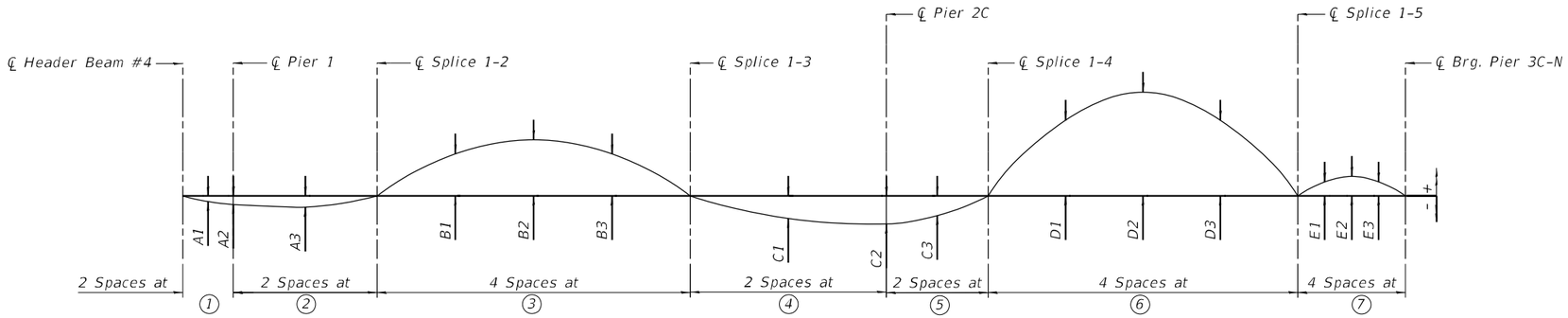

CAMBER DIAGRAM - UNIT 1

CAMBER ORDINATES - UNIT 1															
Girder	A1	A2	A3	B1	B2	B3	C1	C2	C3	D1	D2	D3	E1	E2	E3
13	-1"	-1 1/4"	-1"	3 3/4"	4 3/4"	3 3/4"	-2"	-2 1/2"	-1 3/4"	6 3/4"	9 1/4"	6 3/4"	1 1/4"	1 3/4"	1 1/4"

CAMBER ORDINATES - UNIT 1							
Girder	1	2	3	4	5	6	7
13	21' -4 5/8"	26' -11 5/8"	29' -4 3/4"	36' -9 5/8"	19' -1 1/4"	29' -0 7/8"	10' -1 3/8"

*TOP OF WEB ELEVATION (FT) - UNIT 1								
Girder	℄ Header Beam #4	℄ Pier 1	℄ Splice 1-2	℄ Splice 1-3	℄ Pier 2	℄ Splice 1-4	℄ Splice 1-5	℄ Brg. Pier 3C-N
13	489.49	490.47	491.94	494.60	495.94	496.95	499.59	499.45

*Top of web elevations are the elevations with no load applied to the girders (for fabrication use only)

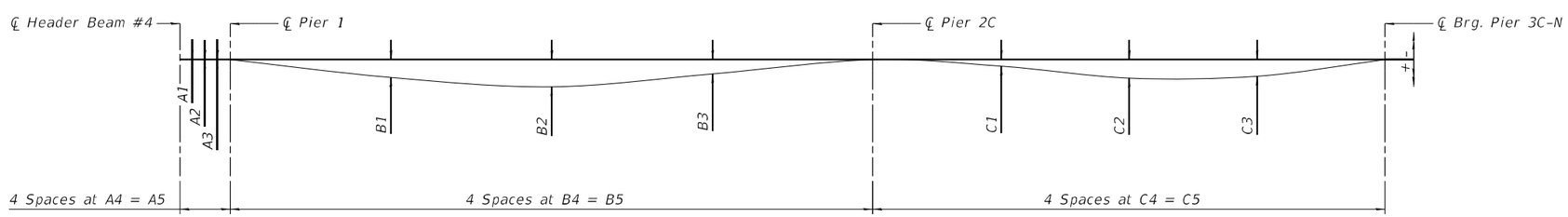

DEAD LOAD DEFLECTION - UNIT 1

(Include weight of structural steel only)

Girder No.	DEAD LOAD DEFLECTIONS														
	SPAN 1					SPAN 2					SPAN 3C				
	A1	A2	A3	A4	A5	B1	B2	B3	B4	B5	C1	C2	C3	C4	C5
13	0"	- 1/8"	- 1/8"	10' -8 1/4"	42' -9 1/8"	1 1/2"	2 3/8"	1 1/4"	61' -3 1/2"	245' -1 3/4"	5/8"	1 5/8"	1 1/2"	48' -8 3/4"	194' -11"

Note:
The calculated deflections of the primary girders/beams under steel self-weight shall be used to detail the diaphragm, cross frame and lateral bracing connections, and to erect the structural steel such that the girders/beams will be plumb within a tolerance of ±1/8 in. per vertical ft. throughout when supporting their own weight.

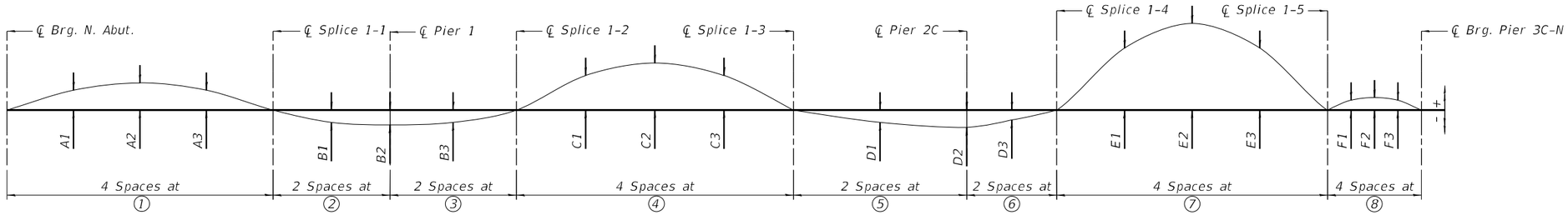

CAMBER DIAGRAM - UNIT 1

CAMBER ORDINATES - UNIT 1																		
Girder	A1	A2	A3	B1	B2	B3	C1	C2	C3	D1	D2	D3	E1	E2	E3	F1	F2	F3
14	2"	2 3/4"	2"	-1 1/4"	-1 1/2"	-1 1/4"	3 1/2"	4 1/2"	3 1/2"	-1 1/2"	-1 3/4"	-1 1/4"	6 1/4"	8 3/4"	6 1/4"	1"	1 1/4"	1"
15	1 3/4"	2 1/2"	1 3/4"	-1 1/4"	-1 1/2"	-1 1/4"	3 1/4"	4 1/4"	3 1/4"	-1"	-1"	- 3/4"	5 1/4"	7 1/2"	5 1/4"	1"	1 1/4"	1"
16	1 3/4"	2 1/2"	1 3/4"	-1"	-1 1/4"	-1"	3"	4"	3"	0"	0"	0"	4 1/2"	6"	4 1/2"	1"	1 1/4"	1"

CAMBER ORDINATES - UNIT 1								
Girder	①	②	③	④	⑤	⑥	⑦	⑧
14	28' - 2 3/4"	24' - 9 7/8"	26' - 10"	29' - 4 3/4"	36' - 9 3/4"	19' - 1 1/8"	28' - 8 3/4"	9' - 11 3/8"
15	28' - 1 1/2"	25' - 0 3/8"	26' - 7 1/2"	29' - 4 3/4"	36' - 9 3/4"	19' - 1 1/8"	28' - 4 3/4"	9' - 9 1/2"
16	28' - 0 1/4"	25' - 2 7/8"	26' - 5"	29' - 4 3/4"	36' - 9 3/4"	19' - 1 1/8"	28' - 0 5/8"	9' - 7 1/2"

*TOP OF WEB ELEVATION (FT) - UNIT 1									
Girder	℄ Brg. N. Abut.	℄ Splice 1-1	℄ Pier 1	℄ Splice 1-2	℄ Splice 1-3	℄ Pier 2C	℄ Splice 1-4	℄ Splice 1-5	℄ Brg. Pier 3C-N
14	486.80	489.25	490.35	491.80	494.43	495.77	496.69	499.04	498.91
15	486.62	489.06	490.18	491.62	494.32	495.67	496.50	498.49	498.43
16	486.46	488.90	490.04	491.44	494.15	495.53	496.24	497.93	497.95

*Top of web elevations are the elevations with no load applied to the girders (for fabrication use only)

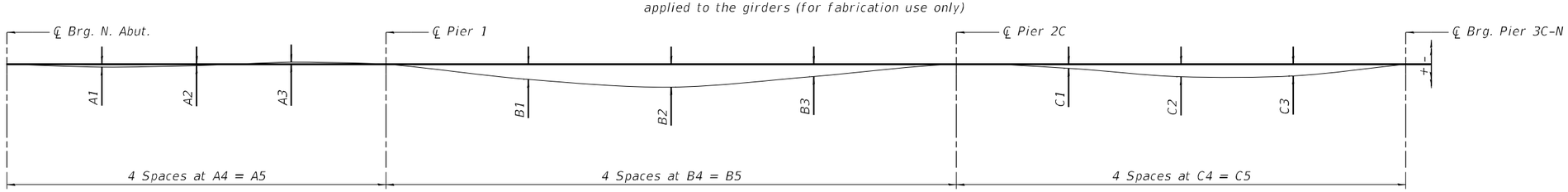

DEAD LOAD DEFLECTION - UNIT 1

(Includes weight of structural steel only)

Girder No.	DEAD LOAD DEFLECTIONS														
	SPAN 1					SPAN 2					SPAN 3C				
	A1	A2	A3	A4	A5	B1	B2	B3	B4	B5	C1	C2	C3	C4	C5
14	1/4"	1/8"	- 1/8"	40' -7 5/8"	162' -6 5/8"	1 1/2"	2 1/4"	1 1/4"	61' -2 1/2"	244' -10 1/8"	3/8"	1 1/4"	1 1/4"	48' -2 3/4"	192' -11 1/8"
15	1/4"	1/8"	- 1/8"	40' -7 5/8"	162' -6 5/8"	1 3/8"	2 1/4"	1 1/4"	61' -1 1/4"	244' -5 1/4"	1/4"	7/8"	7/8"	47' -8 3/4"	190' -11 1/8"
16	1/4"	1/4"	0"	40' -7 3/8"	162' -6 5/8"	1 3/8"	2 1/8"	1 1/4"	61' -0"	244' -0 1/4"	1/8"	5/8"	1/2"	47' -2 3/4"	188' -11 1/4"

Note:
The calculated deflections of the primary girders/beams under steel self-weight shall be used to detail the diaphragm, cross frame and lateral bracing connections, and to erect the structural steel such that the girders/beams will be plumb within a tolerance of ±1/8 in. per vertical ft. throughout when supporting their own weight.

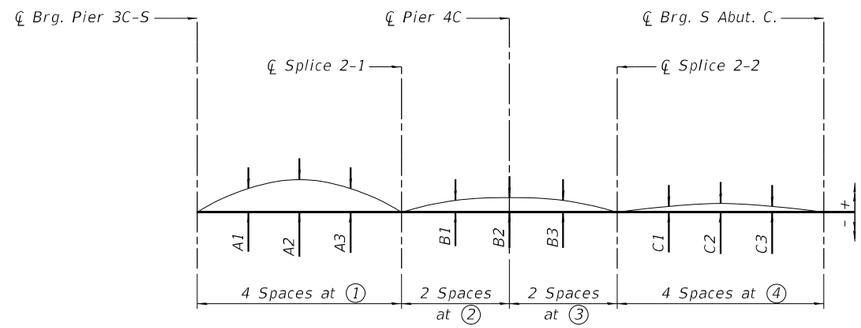

CAMBER DIAGRAM - UNIT 2

*TOP OF WEB ELEVATION (FT) - UNIT 2					
Girder	℄ Brg. Pier 3C-S	℄ Splice 2-1	℄ Pier 4C	℄ Splice 2-2	℄ Brg. S. Abut. C
13	499.45	498.48	497.53	496.37	493.70
14	498.97	498.00	497.06	495.87	493.23
15	498.49	497.51	496.60	495.39	492.75
16	498.01	497.03	496.10	494.89	492.27

*Top of web elevations are the elevations with no load applied to the girders (for fabrication use only)

CAMBER ORDINATES - UNIT 2													
Girder	A1	A2	A3	B1	B2	B3	C1	C2	C3	1	2	3	4
13	2"	2¾"	2"	1"	1¼"	1"	½"	¾"	½"	18' - 1¼"	19' - 1⅝"	19' - 1⅝"	18' - 4⅛"
14	2"	2¾"	2"	1¼"	1½"	1¼"	½"	¾"	½"	16' - 11¾"	18' - 7⅝"	18' - 7⅝"	17' - 10¼"
15	1¾"	2½"	1¾"	1½"	1¾"	1½"	0"	0"	0"	17' - 4⅛"	18' - 1½"	18' - 1½"	17' - 4½"
16	1¾"	2½"	1¾"	1½"	1¾"	1½"	0"	0"	0"	16' - 11⅝"	17' - 7½"	17' - 7½"	16' - 10⅝"

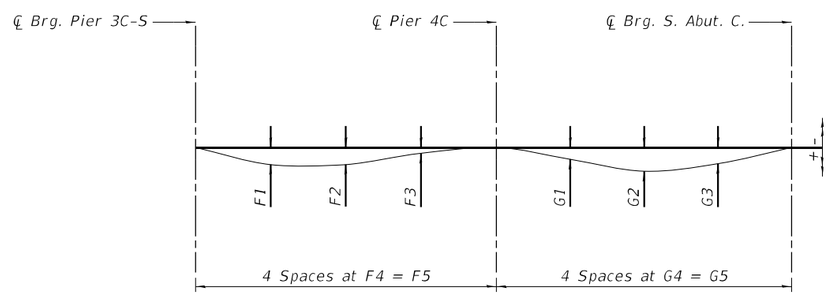

DEAD LOAD DEFLECTION DIAGRAM - UNIT 2

(Includes weight of structural steel only)

DEAD LOAD DEFLECTIONS - UNIT 2										
Girder No.	SPAN 4C					SPAN 5C				
	F1	F2	F3	F4	F5	G1	G2	G3	G4	G5
13	⅜"	⅜"	⅛"	27' - 8⅛"	110' - 8⅜"	¼"	½"	⅜"	27' - 10⅞"	111' - 7⅝"
14	¼"	¼"	⅛"	27' - 0½"	108' - 2"	⅛"	⅜"	¼"	27' - 2"	108' - 8¼"
15	¼"	¼"	⅛"	26' - 4⅞"	105' - 7⅝"	⅛"	¼"	¼"	26' - 5¼"	105' - 8¾"
16	⅛"	¼"	⅛"	25' - 9¼"	103' - 1⅛"	⅛"	¼"	⅛"	25' - 8⅜"	102' - 9½"

Note:
The calculated deflections of the primary girders/beams under steel self-weight shall be used to detail the diaphragm, cross frame and lateral bracing connections, and to erect the structural steel such that the girders/beams will be plumb within a tolerance of ±⅛ in. per vertical ft. throughout when supporting their own weight.

GIRDER 1 MOMENT TABLE								
		0.4 Sp.1	Pier 1	0.5 Sp. 2	Pier 2	0.5 Sp. 3	Pier 3D	0.6 Sp. 4
Is	(in^4)	118,933	230,824	124,625	255,173	91,453	162,466	77,768
Ic(n)	(in^4)	224,128	–	237,575	–	188,326	–	168,998
Ic(3n)	(in^4)	168,966	–	177,928	–	139,517	–	124,150
Ic(cr)	(in^4)	–	244,189	–	268,499	–	174,807	–
Ss	(in^3)	2,955	5,342	3,201	5,923	2,272	3,915	1,944
Sc(n)	(in^3)	3,670	–	3,963	–	2,985	–	2,647
Sc(3n)	(in^3)	3,368	–	3,642	–	2,704	–	2,381
Sc(cr)	(in^3)	–	5,857	–	6,443	–	4,026	–
Sxc	(in^3)	3,540	5,667	3,676	6,261	2,865	3,997	2,526
DC1	(k/')	1.26	1.49	1.28	1.54	1.20	1.40	1.17
MDC1	('k)	1,412	6,556	3,307	6,912	1,011	3,385	929
DC2	(k/')	0.34	0.33	0.29	0.28	0.14	0.27	0.16
MDC2	('k)	466	1,480	702	1,565	291	765	229
DW	(k/')	0.40	0.37	0.39	0.39	0.39	0.33	0.22
MDW	('k)	457	1,767	1,017	1,893	417	953	311
M_{LL+IM}	('k)	3,250	4,467	3,894	4,716	2,915	3,381	2,140
fℓ (Strength I)	(ksi)	4.4	6.3	6.3	4.6	6.8	8.0	9.8
Mu + 1/3 fℓ Sxc	('k)	9,155	21,506	13,996	22,495	7,899	13,418	6,348
Øf Mn	('k)	–	–	–	–	–	–	–
fs DC1	(ksi)	5.7	14.7	12.4	14.0	5.3	10.4	5.7
fs DC2	(ksi)	1.7	3.0	2.3	2.9	1.3	2.3	1.2
fs DW	(ksi)	1.6	3.6	3.4	3.5	1.9	2.8	1.6
fs (LL+IM)	(ksi)	10.6	9.2	11.8	8.8	11.7	10.1	9.7
fℓ (Service II)	(ksi)	3.2	4.8	4.7	3.5	5.0	6.0	7.2
fs+ $^{fl}/_2$ (Service II)	(ksi)	24.5	35.7	35.7	33.6	26.2	31.6	24.7
0.95Rh Fyf	(ksi)	47.5	47.5	47.5	47.5	47.5	47.5	47.5
fs + $^{fl}/_3$ (Total)(Strength I)	(ksi)	31.8	45.7	46.2	43.4	33.9	40.4	31.2
Øf Fn	(ksi)	50.0	50.0	50.0	50.0	50.0	46.5	50.0
Vf	(k)	34.5	36.1	29.6	35.4	28.6	37.5	29.2

GIRDER 1 REACTION TABLE						
		N. Abut.	Pier 1	Pier 2	Pier 3D	S. Abut. D.
RDC1	(k)	65.8	320.1	328.7	251.1	41.8
RDC2	(k)	22.5	83.6	83.4	60.9	12.2
RDW	(k)	19.2	86.3	88.7	71.0	12.6
R_{LL+IM}	(k)	99.6	216.6	183.5	223.4	87.4
Rtotal	(k)	207.1	706.6	684.3	606.4	154.0

GIRDER 2 MOMENT TABLE								
		0.4 Sp.1	Pier 1	0.5 Sp. 2	Pier 2	0.5 Sp. 3	Pier 3D	0.6 Sp. 4
Is	(in^4)	118,933	230,824	124,625	255,173	91,453	162,466	77,768
Ic(n)	(in^4)	228,513	–	242,356	–	192,035	–	172,319
Ic(3n)	(in^4)	171,991	–	181,174	–	142,301	–	126,768
Ic(cr)	(in^4)	–	245,200	–	269,508	–	175,731	–
Ss	(in^3)	2,955	5,342	3,201	5,923	2,272	3,915	1,944
Sc(n)	(in^3)	3,690	–	3,984	–	3,002	–	2,663
Sc(3n)	(in^3)	3,388	–	3,663	–	2,723	–	2,400
Sc(cr)	(in^3)	–	5,898	–	6,483	–	4,034	–
Sxc	(in^3)	3,554	5,693	3,694	6,287	2,871	4,000	2,503
DC1	(k/')	1.25	1.48	1.26	1.53	1.19	1.39	1.16
MDC1	('k)	1,497	6,567	3,314	6,923	1,097	3,680	1,217
DC2	(k/')	0.23	0.22	0.22	0.19	0.16	0.25	0.21
MDC2	('k)	308	968	522	1,058	331	695	296
DW	(k/')	0.43	0.38	0.40	0.40	0.40	0.36	0.28
MDW	('k)	492	1,815	1,039	1,947	427	1,030	390
M_{LL+IM}	('k)	2,890	3,697	3,270	3,925	2,454	2,781	1,934
fℓ (Strength I)	(ksi)	5.4	8.0	7.6	7.0	7.6	7.8	11.9
Mu + 1/3 fℓ Sxc	('k)	8,584	19,877	12,852	20,982	7,324	12,742	6,687
Øf Mn	('k)	–	–	–	–	–	–	–
fs DC1	(ksi)	6.1	14.8	12.4	14.0	5.8	11.3	7.5
fs DC2	(ksi)	1.1	2.0	1.7	2.0	1.5	2.1	1.5
fs DW	(ksi)	1.7	3.7	3.4	3.6	1.9	3.1	1.9
fs (LL+IM)	(ksi)	9.4	7.5	9.8	7.3	9.8	8.3	8.7
fℓ (Service II)	(ksi)	4.0	6.1	5.6	5.3	5.6	5.9	9.0
fs+ $^{fl}/_2$ (Service II)	(ksi)	23.1	33.2	33.2	31.7	24.7	30.1	26.8
0.95Rh Fyf	(ksi)	47.5	47.5	47.5	47.5	47.5	47.5	47.5
fs + $^{fl}/_3$ (Total)(Strength I)	(ksi)	29.8	42.3	42.5	40.4	31.6	38.3	33.4
Øf Fn	(ksi)	50.0	50.0	50.0	50.0	50.0	46.3	50.0
Vf	(k)	24.7	24.9	23.1	25.5	21.4	25.2	20.0

GIRDER 2 REACTION TABLE						
		N. Abut.	Pier 1	Pier 2	Pier 3D	S. Abut. D.
RDC1	(k)	64.5	309.1	315.7	240.6	56.7
RDC2	(k)	9.5	45.4	46.6	43.7	9.8
RDW	(k)	20.4	86.1	89.5	70.0	17.7
R_{LL+IM}	(k)	83.4	170.0	146.5	172.4	76.8
Rtotal	(k)	177.7	610.6	598.3	526.7	161.0

Is, Ss: Non-composite moment of inertia and section modulus of the steel section used for computing fs(Total-Strength I, and Service II) due to non-composite dead loads ($in.^4$ and $in.^3$).

Ic(n), Sc(n): Composite moment of inertia and section modulus of the steel and deck based upon the modular ratio, "n", used for computing fs(Total-Strength I, and Service II) in uncracked sections due to short term composite live loads ($in.^4$ and $in.^3$).

Ic(3n), Sc(3n): Composite moment of inertia and section modulus of the steel and deck based upon 3 times the modular ratio, "3n", used for computing fs(Total-Strength I, and Service II) in uncracked sections due to long-term composite (superimposed) dead loads ($in.^4$ and $in.^3$).

Ic(cr), Sc(cr): Composite moment of inertia and section modulus of the steel and longitudinal deck reinforcement, used for computing fs(Total-Strength I and Service II) in cracked sections, due to both short-term composite live loads and long-term composite (superimposed) dead loads ($in.^4$ and $in.^3$).

Sxc: Section modulus about the major axis of section to the controlling flange, tension or compression, taken as yield moment with respect to the controlling flange over the yield strength of the controlling flange ($in.^3$).

DC1: Un-factored non-composite dead load (kips/ft.).

MDC1: Un-factored moment due to non-composite dead load (kip-ft.).

DC2: Un-factored long-term composite (superimposed excluding future wearing surface) dead load (kips/ft.).

MDC2: Un-factored moment due to long-term composite (superimposed excluding future wearing surface) dead load (kip-ft.).

DW: Un-factored long-term composite (superimposed future wearing surface only) dead load (kips/ft.).

MDW: Un-factored moment due to long-term composite (superimposed future wearing surface only) dead load (kip-ft.).

M_{LL+IM}: Un-factored live load moment plus dynamic load allowance (impact)(kip-ft.).

Mu (Strength I): Factored design moment (kip-ft.).
1.25 (MDC1+ MDC2) + 1.5 MDW + 1.75 M_{LL+IM}

fℓ: Factored calculated normal stress at edge of flange for controlling flange plate due to lateral bending, Strength I or Service II as applicable (kip-ft.).

Øf Mn: Compact composite positive moment capacity computed according to Article 6.10.7.1 or non-slender negative moment capacity according to Article A6.1.1 or A6.1.2 (kip-ft.).

fs DC1: Un-factored stress at edge of flange for controlling steel flange due to vertical non-composite dead loads as calculated below (ksi).
MDC1 / Snc

fs DC2: Un-factored stress at edge of flange for controlling steel flange due to vertical composite dead loads as calculated below (ksi).
MDC2 / Sc(3n) or MDC2 / Sc(cr) as applicable.

fs DW: Un-factored stress at edge of flange for controlling steel flange due to vertical composite future wearing surface loads as calculated below (ksi).
MDW / Sc(3n) or MDW / Sc(cr) as applicable.

fs (LL+IM): Un-factored stress at edge of flange for controlling steel flange due to vertical composite live plus impact loads as calculated below (ksi).
M_{LL+IM} / Sc(n) or M_{LL+IM} / Sc(cr) as applicable.

fs + $^{fl}/_2$ (Service II): Sum of stresses as computed below (ksi).
fsDC1 + fsDC2 + fsDW + 1.3 fs($_{LL+IM}$) +

0.95RhFyf: Composite stress capacity for Service II loading according to Article 6.10.4.2 (ksi).

fs + $^{fl}/_3$ (Total)(Strength I): Sum of stresses as computed below on non-compact section (ksi).
1.25 (fsDC1 + fsDC2) + 1.5 fsDW + 1.75 fs($_{LL+IM}$) +

Øf Fn: Non-Compact composite positive or negative stress capacity for Strength I loading according to Article 6.10.7 or 6.10.8 (ksi).

Vf: Maximum factored shear range in span computed according to Article 6.10.10.

Note:
M_{LL} and R_{LL} include the effects of centrifugal force and superelevation.

GIRDER 3 MOMENT TABLE		0.4 Sp.1	Pier 1	0.5 Sp. 2	Pier 2	0.5 Sp. 3	Pier 3D	0.6 Sp. 4
Is	(in^4)	80,888	194,878	124,903	206,467	77,768	177,545	112,887
Ic(n)	(in^4)	178,308	–	235,383	–	172,319	–	250,544
Ic(3n)	(in^4)	131,543	–	177,460	–	126,768	–	179,859
Ic(cr)	(in^4)	–	206,378	–	220,891	–	192,445	–
Ss	(in^3)	2,022	4,696	3,065	5,210	1,944	4,008	3,234
Sc(n)	(in^3)	2,749	–	3,809	–	2,663	–	4,206
Sc(3n)	(in^3)	2,484	–	3,495	–	2,400	–	3,833
Sc(cr)	(in^3)	–	4,793	–	5,333	–	4,554	–
Sxc	(in^3)	2,617	4,758	3,523	5,292	2,523	4,383	3,975
DC1	(k/')	1.18	1.28	1.23	1.42	1.16	1.36	1.24
MDC1	('k)	1,040	5,710	3,349	5,790	1,033	4,180	2,143
DC2	(k/')	0.10	0.11	0.14	0.10	0.14	0.28	0.35
MDC2	('k)	135	475	341	578	293	798	506
DW	(k/')	0.36	0.33	0.39	0.36	0.38	0.40	0.46
MDW	('k)	414	1,581	1,011	1,754	403	1,143	653
M_{L+IM}	('k)	2,104	2,776	2,745	3,054	1,844	2,876	2,826
fℓ (Strength I)	(ksi)	7.6	3.5	6.0	4.8	8.6	7.3	9.4
Mu + 1/3 fℓ Sxc	('k)	6,324	15,417	11,521	16,632	6,091	13,857	10,278
Φf Mn	('k)	–	–	–	–	–	–	–
fs DC1	(ksi)	6.2	14.6	13.1	13.3	6.4	12.5	8.0
fs DC2	(ksi)	0.7	1.2	1.2	1.3	1.5	2.1	1.6
fs DW	(ksi)	2.0	4.0	3.5	3.9	2.0	3.0	2.0
fs (L+IM)	(ksi)	9.2	6.9	8.6	6.9	8.3	7.6	8.1
fℓ (Service II)	(ksi)	5.6	2.6	4.5	3.6	6.3	5.5	7.0
fs+ $^{fl}/_2$ (Service II)	(ksi)	23.6	30.1	31.2	29.3	23.8	30.2	25.6
0.95Rh Fyf	(ksi)	47.5	47.5	47.5	47.5	47.5	47.5	47.5
fs + $^{fl}/_3$ (Total)(Strength I)	(ksi)	30.1	39.0	40.2	37.8	30.2	38.5	32.2
Φf Fn	(ksi)	50.0	46.2	50.0	47.2	50.0	50.0	50.0
Vf	(k)	20.1	21.6	20.7	22.4	20.6	25.0	23.8

GIRDER 3 REACTION TABLE		N. Abut.	Pier 1	Pier 2	Pier 3D	S. Abut. D.
RDC1	(k)	54.1	282.3	289.5	239.7	77.2
RDC2	(k)	3.3	19.6	22.5	44.2	14.5
RDW	(k)	18.6	80.3	86.2	69.1	23.2
R_{L+IM}	(k)	81.5	143.3	129.2	167.8	90.3
Rtotal	(k)	157.5	525.5	527.4	520.8	205.1

GIRDER 4 MOMENT TABLE		0.4 Sp.1	Pier 1	0.5 Sp. 2	Pier 2	0.5 Sp. 3	Pier 3D	0.6 Sp. 4
Is	(in^4)	–	194,878	124,903	206,467	77,768	177,545	112,887
Ic(n)	(in^4)	–	–	237,118	–	175,394	–	245,085
Ic(3n)	(in^4)	–	–	178,644	–	129,282	–	176,057
Ic(cr)	(in^4)	–	205,157	–	219,775	–	191,405	–
Ss	(in^3)	–	4,696	3,065	5,210	1,944	4,008	3,234
Sc(n)	(in^3)	–	–	3,816	–	2,678	–	4,182
Sc(3n)	(in^3)	–	–	3,503	–	2,417	–	3,807
Sc(cr)	(in^3)	–	4,783	–	5,324	–	4,514	–
Sxc	(in^3)	–	4,751	3,530	5,287	2,520	4,347	3,915
DC1	(k/')	–	1.17	1.21	1.32	1.21	1.39	1.26
MDC1	('k)	–	5,704	3,374	5,677	1,187	4,417	2,537
DC2	(k/')	–	0.06	0.09	0.06	0.10	0.34	0.42
MDC2	('k)	–	268	206	325	213	974	607
DW	(k/')	–	0.32	0.39	0.34	0.41	0.40	0.53
MDW	('k)	–	1,525	1,014	1,678	429	1,154	742
M_{L+IM}	('k)	–	2,462	2,463	2,536	1,614	3,441	3,969
fℓ (Strength I)	(ksi)	–	2.7	6.9	4.1	9.2	6.1	9.6
Mu + 1/3 fℓ Sxc	('k)	–	14,420	10,984	15,066	5,865	15,233	13,034
Φf Mn	('k)	–	–	–	–	–	–	–
fs DC1	(ksi)	–	14.6	13.2	13.1	7.3	13.2	9.4
fs DC2	(ksi)	–	0.7	0.7	0.7	1.1	2.6	1.9
fs DW	(ksi)	–	3.8	3.5	3.8	2.1	3.1	2.3
fs (L+IM)	(ksi)	–	6.2	7.7	5.7	7.2	9.1	11.4
fℓ (Service II)	(ksi)	–	2.0	5.2	3.1	6.7	4.6	7.2
fs+ $^{fl}/_2$ (Service II)	(ksi)	–	28.1	30.0	26.6	23.3	33.1	32.1
0.95Rh Fyf	(ksi)	–	47.5	47.5	47.5	47.5	47.5	47.5
fs + $^{fl}/_3$ (Total)(Strength I)	(ksi)	–	36.5	38.5	34.3	29.4	42.4	40.8
Φf Fn	(ksi)	–	46.3	50.0	47.4	50.0	50.0	50.0
Vf	(k)	–	24.0	21.4	23.9	38.4	38.3	36.3

GIRDER 4 REACTION TABLE		N. Abut.	Pier 1	Pier 2	Pier 3D	S. Abut. D.
RDC1	(k)	--	270.7	272.8	255.9	103.3
RDC2	(k)	--	9.4	9.9	66.5	28.7
RDW	(k)	--	77.1	80.3	71.5	29.9
R_{L+IM}	(k)	--	128.6	108.5	213.8	130.8
Rtotal	(k)	--	485.8	471.6	607.7	292.7

Is, Ss: Non-composite moment of inertia and section modulus of the steel section used for computing fs(Total-Strength I, and Service II) due to non-composite dead loads ($in.^4$ and $in.^3$).

Ic(n), Sc(n): Composite moment of inertia and section modulus of the steel and deck based upon the modular ratio, "n", used for computing fs(Total-Strength I, and Service II) in uncracked sections due to short term composite live loads ($in.^4$ and $in.^3$).

Ic(3n), Sc(3n): Composite moment of inertia and section modulus of the steel and deck based upon 3 times the modular ratio, "3n", used for computing fs(Total-Strength I, and Service II) in uncracked sections due to long-term composite (superimposed) dead loads ($in.^4$ and $in.^3$).

Ic(cr), Sc(cr): Composite moment of inertia and section modulus of the steel and longitudinal deck reinforcement, used for computing fs(Total-Strength I and Service II) in cracked sections, due to both short-term composite live loads and long-term composite (superimposed) dead loads ($in.^4$ and $in.^3$).

Sxc: Section modulus about the major axis of section to the controlling flange, tension or compression, taken as yield moment with respect to the controlling flange over the yield strength of the controlling flange ($in.^3$).

DC1: Un-factored non-composite dead load (kips/ft.).

MDC1: Un-factored moment due to non-composite dead load (kip-ft.).

DC2: Un-factored long-term composite (superimposed excluding future wearing surface) dead load (kips/ft.).

MDC2: Un-factored moment due to long-term composite (superimposed excluding future wearing surface) dead load (kip-ft.).

DW: Un-factored long-term composite (superimposed future wearing surface only) dead load (kips/ft.).

MDW: Un-factored moment due to long-term composite (superimposed future wearing surface only) dead load (kip-ft.).

M_{L+IM}: Un-factored live load moment plus dynamic load allowance (impact)(kip-ft.).

Mu (Strength I): Factored design moment (kip-ft.).
1.25 (MDC1+ MDC2) + 1.5 MDW + 1.75 M_{L+IM}

fℓ: Factored calculated normal stress at edge of flange for controlling flange plate due to lateral bending, Strength I or Service II as applicable (kip-ft.).

Øf Mn: Compact composite positive moment capacity computed according to Article 6.10.7.1 or non-slender negative moment capacity according to Article A6.1.1 or A6.1.2 (kip-ft.).

fs DC1: Un-factored stress at edge of flange for controlling steel flange due to vertical non-composite dead loads as calculated below (ksi).
MDC1 / Snc

fs DC2: Un-factored stress at edge of flange for controlling steel flange due to vertical composite dead loads as calculated below (ksi).
MDC2 / Sc(3n) or MDC2 / Sc(cr) as applicable.

fs DW: Un-factored stress at edge of flange for controlling steel flange due to vertical composite future wearing surface loads as calculated below (ksi).
MDW / Sc(3n) or MDW / Sc(cr) as applicable.

fs (L+IM): Un-factored stress at edge of flange for controlling steel flange due to vertical composite live plus impact loads as calculated below (ksi).
M_{L+IM} / Sc(n) or M_{L+IM} / Sc(cr) as applicable.

fs + $^{fl}/_2$ (Service II): Sum of stresses as computed below (ksi).
fsDC1 + fsDC2 + fsDW + 1.3 fs(L_{+IM}) + $^{fl}/_2$

0.95RhFyf: Composite stress capacity for Service II loading according to Article 6.10.4.2 (ksi).

fs + $^{fl}/_3$ (Total)(Strength I): Sum of stresses as computed below on non-compact section (ksi).
1.25 (fsDC1 + fsDC2) + 1.5 fsDW + 1.75 fs(L_{+IM}) + $^{fl}/_3$

Øf Fn: Non-Compact composite positive or negative stress capacity for Strength I loading according to Article 6.10.7 or 6.10.8 (ksi).

Vf: Maximum factored shear range in span computed according to Article 6.10.10.

Note:
M_L and R_L include the effects of centrifugal force and superelevation.

Michael Baker INTERNATIONAL
200 W Adams Street
Suite 1800
Chicago, IL 60606
PH: 312.707.8770
FAX: 312.707.8804

USER NAME = DLamb	DESIGNED - JMK	REVISED -
	CHECKED - JTB	REVISED -
PLOT SCALE = 0:2.0000 ':" / in.	DRAWN - ADM	REVISED -
PLOT DATE = 6/6/2023	CHECKED - JMK	REVISED -

STATE OF ILLINOIS
DEPARTMENT OF TRANSPORTATION

GIRDER MOMENT & REACTION TABLES 2
STRUCTURE NO. 090-0182

SHEET S-126 OF S-194 SHEETS

F.A.P. RTE.	SECTION	COUNTY	TOTAL SHEETS	SHEET NO.
VAR.	13 (HVB, HB-3) BR-1;R	TAZEWELL	1173	652
		CONTRACT NO. 68C55		
	ILLINOIS	FED. AID PROJECT		

GIRDER 5 MOMENT TABLE		0.4 Sp.1	Pier 1	0.5 Sp. 2	Pier 2	0.5 Sp. 3	Pier 3	0.6 Sp. 4
Is	(in^4)	–	–	–	206,467	77,768	162,466	77,768
Ic(n)	(in^4)	–	–	–	–	163,552	–	166,231
Ic(3n)	(in^4)	–	–	–	–	120,064	–	122,043
Ic(cr)	(in^4)	–	–	–	216,371	–	172,863	–
Ss	(in^3)	–	–	–	4,760	1,944	3,915	1,944
Sc(n)	(in^3)	–	–	–	–	2,620	–	2,633
Sc(3n)	(in^3)	–	–	–	–	2,351	–	2,366
Sc(cr)	(in^3)	–	–	–	5,134	–	4,009	–
Sxc	(in^3)	–	–	–	4,999	2,506	3,985	2,465
DC1	(k/')	–	–	–	1.16	1.05	1.15	1.04
MDC1	('k)	–	–	–	5,759	926	3,346	1,254
DC2	(k/')	–	–	–	0.04	0.04	0.38	0.44
MDC2	('k)	–	–	–	207	80	916	555
DW	(k/')	–	–	–	0.32	0.33	0.31	0.34
MDW	('k)	–	–	–	1,564	353	870	399
M_{LL+IM}	('k)	–	–	–	2,652	1,648	2,568	2,164
fℓ (Strength I)	(ksi)	–	–	–	2.7	7.4	3.9	5.0
Mu + 1/3 fℓ Sxc	('k)	–	–	–	14,814	5,185	11,562	6,986
Φf Mn	('k)	–	–	–	–	–	–	–
fs DC1	(ksi)	–	–	–	14.5	5.7	10.3	7.7
fs DC2	(ksi)	–	–	–	0.5	0.4	2.7	2.8
fs DW	(ksi)	–	–	–	3.7	1.8	2.6	2.0
fs (LL+IM)	(ksi)	–	–	–	6.2	7.5	7.7	9.9
fℓ (Service II)	(ksi)	–	–	–	2.0	5.5	3.0	3.7
fs+ $^{fl}/_2$ (Service II)	(ksi)	–	–	–	27.7	20.5	27.1	27.3
0.95Rh Fyf	(ksi)	–	–	–	47.5	47.5	47.5	47.5
fs + $^{fl}/_3$ (Total)(Strength I)	(ksi)	–	–	–	36.0	26.0	34.9	35.1
Φf Fn	(ksi)	–	–	–	50.0	50.0	44.2	50.0
Vf	(k)	–	–	–	23.9	29.0	31.1	31.7

GIRDER 5 REACTION TABLE		N. Abut.	Pier 1	Pier 2	Pier 3	S. Abut.
RDC1	(k)	--	--	269.6	204.3	55.7
RDC2	(k)	--	--	5.4	68.9	25.5
RDW	(k)	--	--	77.0	55.0	16.9
R_{LL+IM}	(k)	--	--	109.5	157.1	87.5
Rtotal	(k)	--	--	461.4	485.3	185.6

GIRDER 6 MOMENT TABLE		0.4 Sp.1	Pier 1	0.5 Sp. 2	Pier 2	0.5 Sp. 3	Pier 3	0.6 Sp. 4
Is	(in^4)	80,888	182,100	101,040	206,467	77,768	162,466	77,768
Ic(n)	(in^4)	175,502	–	206,668	–	159,030	–	166,736
Ic(3n)	(in^4)	129,309	–	152,373	–	116,852	–	122,423
Ic(cr)	(in^4)	–	193,707	–	217,241	–	172,992	–
Ss	(in^3)	2,022	4,618	2,609	4,760	1,944	3,915	1,944
Sc(n)	(in^3)	2,736	–	3,371	–	2,596	–	2,636
Sc(3n)	(in^3)	2,469	–	3,065	–	2,326	–	2,368
Sc(cr)	(in^3)	–	4,722	–	5,168	–	4,010	–
Sxc	(in^3)	2,602	4,686	3,097	5,026	2,478	3,986	2,482
DC1	(k/')	1.13	1.20	1.13	1.21	0.94	1.16	1.05
MDC1	('k)	1,093	5,398	2,738	5,534	993	3,301	1,196
DC2	(k/')	0.05	0.03	0.03	0.03	0.05	0.24	0.26
MDC2	('k)	62	119	71	170	95	569	330
DW	(k/')	0.36	0.32	0.34	0.31	0.33	0.30	0.33
MDW	('k)	411	1,509	888	1,537	353	860	379
M_{LL+IM}	('k)	2,235	2,823	2,634	2,838	1,792	2,417	1,983
fℓ (Strength I)	(ksi)	7.0	3.7	8.4	3.1	5.8	3.6	4.8
Mu + 1/3 fℓ Sxc	('k)	6,474	14,582	10,176	14,834	5,422	10,750	6,279
Φf Mn	('k)	–	–	–	–	–	–	–
fs DC1	(ksi)	6.5	14.0	12.6	14.0	6.1	10.1	7.4
fs DC2	(ksi)	0.3	0.3	0.3	0.4	0.5	1.7	1.7
fs DW	(ksi)	2.0	3.8	3.5	3.6	1.8	2.6	1.9
fs (LL+IM)	(ksi)	9.8	7.2	9.4	6.6	8.3	7.2	9.0
fℓ (Service II)	(ksi)	5.1	2.7	6.3	2.2	4.2	2.6	3.6
fs+ $^{fl}/_2$ (Service II)	(ksi)	24.1	28.9	31.7	27.6	21.3	25.1	24.5
0.95Rh Fyf	(ksi)	47.5	47.5	47.5	47.5	47.5	47.5	47.5
fs + $^{fl}/_3$ (Total)(Strength I)	(ksi)	31.0	37.5	40.5	35.8	27.4	32.5	31.6
Φf Fn	(ksi)	50.0	46.3	50.0	50.0	50.0	44.2	50.0
Vf	(k)	22.4	19.4	20.6	22.4	20.7	24.0	22.7

GIRDER 6 REACTION TABLE		N. Abut.	Pier 1	Pier 2	Pier 3	S. Abut.
RDC1	(k)	52.2	264.0	258.9	203.0	53.5
RDC2	(k)	1.4	3.8	4.3	39.8	10.6
RDW	(k)	17.7	75.2	73.1	55.3	16.7
R_{LL+IM}	(k)	77.1	138.2	111.8	141.1	72.0
Rtotal	(k)	148.4	481.2	448.1	439.2	152.8

Is, Ss: Non-composite moment of inertia and section modulus of the steel section used for computing fs(Total-Strength I, and Service II) due to non-composite dead loads ($in.^4$ and $in.^3$).

Ic(n), Sc(n): Composite moment of inertia and section modulus of the steel and deck based upon the modular ratio, "n", used for computing fs(Total-Strength I, and Service II) in uncracked sections due to short term composite live loads ($in.^4$ and $in.^3$).

Ic(3n), Sc(3n): Composite moment of inertia and section modulus of the steel and deck based upon 3 times the modular ratio, "3n", used for computing fs(Total-Strength I, and Service II) in uncracked sections due to long-term composite (superimposed) dead loads ($in.^4$ and $in.^3$).

Ic(cr), Sc(cr): Composite moment of inertia and section modulus of the steel and longitudinal deck reinforcement, used for computing fs(Total-Strength I and Service II) in cracked sections, due to both short-term composite live loads and long-term composite (superimposed) dead loads ($in.^4$ and $in.^3$).

Sxc: Section modulus about the major axis of section to the controlling flange, tension or compression, taken as yield moment with respect to the controlling flange over the yield strength of the controlling flange ($in.^3$).

DC1: Un-factored non-composite dead load (kips/ft.).

MDC1: Un-factored moment due to non-composite dead load (kip-ft.).

DC2: Un-factored long-term composite (superimposed excluding future wearing surface) dead load (kips/ft.).

MDC2: Un-factored moment due to long-term composite (superimposed excluding future wearing surface) dead load (kip-ft.).

DW: Un-factored long-term composite (superimposed future wearing surface only) dead load (kips/ft.).

MDW: Un-factored moment due to long-term composite (superimposed future wearing surface only) dead load (kip-ft.).

M_{LL+IM}: Un-factored live load moment plus dynamic load allowance (impact)(kip-ft.).

Mu (Strength I): Factored design moment (kip-ft.).
1.25 (MDC1+ MDC2) + 1.5 MDW + 1.75 M_{LL+IM}

fℓ: Factored calculated normal stress at edge of flange for controlling flange plate due to lateral bending, Strength I or Service II as applicable (kip-ft.).

Øf Mn: Compact composite positive moment capacity computed according to Article 6.10.7.1 or non-slender negative moment capacity according to Article A6.1.1 or A6.1.2 (kip-ft.).

fs DC1: Un-factored stress at edge of flange for controlling steel flange due to vertical non-composite dead loads as calculated below (ksi).
MDC1 / Snc

fs DC2: Un-factored stress at edge of flange for controlling steel flange due to vertical composite dead loads as calculated below (ksi).
MDC2 / Sc(3n) or MDC2 / Sc(cr) as applicable.

fs DW: Un-factored stress at edge of flange for controlling steel flange due to vertical composite future wearing surface loads as calculated below (ksi).
MDW / Sc(3n) or MDW / Sc(cr) as applicable.

fs (LL+IM): Un-factored stress at edge of flange for controlling steel flange due to vertical composite live plus impact loads as calculated below (ksi).
M_{LL+IM} / Sc(n) or M_{LL+IM} / Sc(cr) as applicable.

fs + $^{fl}/_2$ (Service II): Sum of stresses as computed below (ksi).
fsDC1 + fsDC2 + fsDW + 1.3 fs($_{LL+IM}$) + $^{fl}/_2$

0.95RhFyf: Composite stress capacity for Service II loading according to Article 6.10.4.2 (ksi).

fs + $^{fl}/_3$ (Total)(Strength I): Sum of stresses as computed below on non-compact section (ksi).
1.25 (fsDC1 + fsDC2) + 1.5 fsDW + 1.75 fs($_{LL+IM}$) + $^{fl}/_3$

Øf Fn: Non-Compact composite positive or negative stress capacity for Strength I loading according to Article 6.10.7 or 6.10.8 (ksi).

Vf: Maximum factored shear range in span computed according to Article 6.10.10.

Note:
M_{LL} and R_{LL} include the effects of centrifugal force and superelevation.

Michael Baker INTERNATIONAL
200 W Adams Street
Suite 1800
Chicago, IL 60606
PH: 312.707.8770
FAX: 312.707.8804

USER NAME = DLamb	DESIGNED - JMK	REVISED -
	CHECKED - JTB	REVISED -
PLOT SCALE = 0:2,0000 ':" / in.	DRAWN - ADM	REVISED -
PLOT DATE = 6/6/2023	CHECKED - JMK	REVISED -

STATE OF ILLINOIS
DEPARTMENT OF TRANSPORTATION

GIRDER MOMENT & REACTION TABLES 3
STRUCTURE NO. 090-0182

SHEET S-127 OF S-194 SHEETS

F.A.P. RTE.	SECTION	COUNTY	TOTAL SHEETS	SHEET NO.
VAR.	13 (HVB, HB-3) BR-1;R	TAZEWELL	1173	653
		CONTRACT NO. 68C55		
	ILLINOIS	FED. AID PROJECT		

GIRDER 7 MOMENT TABLE								
		0.4 Sp.1	Pier 1	0.5 Sp. 2	Pier 2	0.5 Sp. 3	Pier 3	0.6 Sp. 4
Is	(in^4)	80,888	182,100	101,040	206,467	77,768	162,466	77,768
Ic(n)	(in^4)	170,603	–	204,478	–	166,421	–	166,421
Ic(3n)	(in^4)	125,572	–	150,838	–	122,186	–	122,186
Ic(cr)	(in^4)	–	194,834	–	219,145	–	174,135	–
Ss	(in^3)	2,022	4,618	2,609	5,210	1,944	3,915	1,944
Sc(n)	(in^3)	2,712	–	3,361	–	2,634	–	2,634
Sc(3n)	(in^3)	2,442	–	3,054	–	2,367	–	2,367
Sc(cr)	(in^3)	–	4,732	–	5,319	–	4,020	–
Sxc	(in^3)	2,583	4,692	3,093	5,283	2,516	3,994	2,495
DC1	(k/')	1.06	1.27	1.10	1.32	1.05	1.23	1.05
MDC1	('k)	1,105	5,448	2,746	5,640	942	3,263	1,137
DC2	(k/')	0.02	0.00	-0.01	0.02	0.05	0.10	0.09
MDC2	('k)	23	6	15	89	111	250	118
DW	(k/')	0.34	0.32	0.33	0.32	0.33	0.30	0.31
MDW	('k)	385	1,506	868	1,566	352	851	357
M_{LL+IM}	('k)	2,397	3,352	2,993	3,524	2,144	2,566	1,968
fℓ (Strength I)	(ksi)	5.2	9.9	7.9	8.5	6.7	7.5	4.9
Mu + 1/3 fℓ Sxc	('k)	6,556	16,238	10,637	16,930	6,062	10,991	5,886
Φf Mn	('k)	–	–	–	–	–	–	–
fs DC1	(ksi)	6.6	14.2	12.6	13.0	5.8	10.0	7.0
fs DC2	(ksi)	0.1	0.0	-0.1	0.2	0.6	0.7	0.6
fs DW	(ksi)	1.9	3.8	3.4	3.5	1.8	2.5	1.8
fs (LL+IM)	(ksi)	10.6	8.5	10.7	8.0	9.8	7.7	9.0
fℓ (Service II)	(ksi)	3.8	7.6	5.9	6.5	4.9	5.7	3.7
fs+ $^{fℓ}/_2$ (Service II)	(ksi)	24.2	32.8	32.8	30.3	23.3	26.1	22.9
0.95Rh Fyf	(ksi)	47.5	47.5	47.5	47.5	47.5	47.5	47.5
fs + $^{fℓ}/_3$ (Total)(Strength I)	(ksi)	31.5	41.6	42.2	38.5	30.0	33.2	29.5
Φf Fn	(ksi)	50.0	46.3	50.0	47.4	50.0	44.2	50.0
Vf	(k)	25.3	25.7	22.6	24.8	22.5	27.3	25.2

GIRDER 7 REACTION TABLE						
		N. Abut.	Pier 1	Pier 2	Pier 3	S. Abut.
RDC1	(k)	52.6	263.5	264.6	202.8	51.2
RDC2	(k)	0.7	1.1	4.4	14.9	3.2
RDW	(k)	16.9	73.1	72.2	54.7	15.6
R_{LL+IM}	(k)	74.9	158.7	132.3	142.2	72.6
Rtotal	(k)	145.1	496.5	473.5	414.6	142.5

GIRDER 8 MOMENT TABLE								
		0.4 Sp.1	Pier 1	0.5 Sp. 2	Pier 2	0.5 Sp. 3	Pier 3	0.6 Sp. 4
Is	(in^4)	80,888	182,100	101,040	206,467	77,768	162,466	77,768
Ic(n)	(in^4)	166,692	–	199,674	–	162,599	–	162,599
Ic(3n)	(in^4)	122,728	–	147,569	–	119,374	–	119,374
Ic(cr)	(in^4)	–	193,813	–	218,125	–	173,202	–
Ss	(in^3)	2,022	4,618	2,609	5,210	1,944	3,915	1,944
Sc(n)	(in^3)	2,693	–	3,338	–	2,615	–	2,615
Sc(3n)	(in^3)	2,421	–	3,031	–	2,346	–	2,346
Sc(cr)	(in^3)	–	4,723	–	5,310	–	4,012	–
Sxc	(in^3)	2,567	4,686	3,081	5,278	2,501	3,988	2,492
DC1	(k/')	1.00	1.21	1.05	1.26	1.00	1.17	1.00
MDC1	('k)	1,122	5,413	2,745	5,630	941	3,205	1,088
DC2	(k/')	-0.01	-0.01	-0.04	0.01	0.03	0.00	-0.06
MDC2	('k)	8	63	92	52	68	6	82
DW	(k/')	0.31	0.30	0.32	0.30	0.33	0.28	0.28
MDW	('k)	362	1,427	831	1,483	346	797	327
M_{LL+IM}	('k)	2,647	3,917	3,494	4,111	2,494	2,942	2,094
fℓ (Strength I)	(ksi)	4.8	5.2	6.8	4.8	6.6	5.0	4.9
Mu + 1/3 fℓ Sxc	('k)	6,913	16,384	11,293	17,233	6,604	10,916	5,784
Φf Mn	('k)	–	–	–	–	–	–	–
fs DC1	(ksi)	6.7	14.1	12.6	13.0	5.8	9.8	6.7
fs DC2	(ksi)	0.0	-0.2	-0.4	0.1	0.3	0.0	-0.4
fs DW	(ksi)	1.8	3.6	3.3	3.4	1.8	2.4	1.7
fs (LL+IM)	(ksi)	11.8	10.0	12.6	9.3	11.4	8.8	9.6
fℓ (Service II)	(ksi)	3.6	3.8	5.1	3.7	4.9	3.7	3.7
fs+ $^{fℓ}/_2$ (Service II)	(ksi)	25.5	32.4	34.4	30.3	25.2	25.5	22.3
0.95Rh Fyf	(ksi)	47.5	47.5	47.5	47.5	47.5	47.5	47.5
fs + $^{fℓ}/_3$ (Total)(Strength I)	(ksi)	33.2	42.0	44.6	39.3	32.6	33.0	29.0
Φf Fn	(ksi)	50.0	46.3	50.0	47.3	50.0	44.2	50.0
Vf	(k)	27.5	31.4	28.9	30.3	24.1	30.9	27.6

GIRDER 8 REACTION TABLE						
		N. Abut.	Pier 1	Pier 2	Pier 3	S. Abut.
RDC1	(k)	52.8	259.7	261.4	198.7	48.7
RDC2	(k)	1.2	0.8	6.4	-4.8	-2.6
RDW	(k)	15.2	68.0	66.9	50.8	13.5
R_{LL+IM}	(k)	81.8	191.3	158.1	165.6	77.6
Rtotal	(k)	151.0	519.8	492.8	410.3	137.1

Is, Ss: Non-composite moment of inertia and section modulus of the steel section used for computing fs(Total-Strength I, and Service II) due to non-composite dead loads ($in.^4$ and $in.^3$).

Ic(n), Sc(n): Composite moment of inertia and section modulus of the steel and deck based upon the modular ratio, "n", used for computing fs(Total-Strength I, and Service II) in uncracked sections due to short term composite live loads ($in.^4$ and $in.^3$).

Ic(3n), Sc(3n): Composite moment of inertia and section modulus of the steel and deck based upon 3 times the modular ratio, "3n", used for computing fs(Total-Strength I, and Service II) in uncracked sections due to long-term composite (superimposed) dead loads ($in.^4$ and $in.^3$).

Ic(cr), Sc(cr): Composite moment of inertia and section modulus of the steel and longitudinal deck reinforcement, used for computing fs(Total-Strength I and Service II) in cracked sections, due to both short-term composite live loads and long-term composite (superimposed) dead loads ($in.^4$ and $in.^3$).

Sxc: Section modulus about the major axis of section to the controlling flange, tension or compression, taken as yield moment with respect to the controlling flange over the yield strength of the controlling flange ($in.^3$).

DC1: Un-factored non-composite dead load (kips/ft.).

MDC1: Un-factored moment due to non-composite dead load (kip-ft.).

DC2: Un-factored long-term composite (superimposed excluding future wearing surface) dead load (kips/ft.).

MDC2: Un-factored moment due to long-term composite (superimposed excluding future wearing surface) dead load (kip-ft.).

DW: Un-factored long-term composite (superimposed future wearing surface only) dead load (kips/ft.).

MDW: Un-factored moment due to long-term composite (superimposed future wearing surface only) dead load (kip-ft.).

M_{LL+IM}: Un-factored live load moment plus dynamic load allowance (impact)(kip-ft.).

Mu (Strength I): Factored design moment (kip-ft.).
1.25 (MDC1+ MDC2) + 1.5 MDW + 1.75 M_{LL+IM}

fℓ: Factored calculated normal stress at edge of flange for controlling flange plate due to lateral bending, Strength I or Service II as applicable (kip-ft.).

Øf Mn: Compact composite positive moment capacity computed according to Article 6.10.7.1 or non-slender negative moment capacity according to Article A6.1.1 or A6.1.2 (kip-ft.).

fs DC1: Un-factored stress at edge of flange for controlling steel flange due to vertical non-composite dead loads as calculated below (ksi).
MDC1 / Snc

fs DC2: Un-factored stress at edge of flange for controlling steel flange due to vertical composite dead loads as calculated below (ksi).
MDC2 / Sc(3n) or MDC2 / Sc(cr) as applicable.

fs DW: Un-factored stress at edge of flange for controlling steel flange due to vertical composite future wearing surface loads as calculated below (ksi).
MDW / Sc(3n) or MDW / Sc(cr) as applicable.

fs (LL+IM): Un-factored stress at edge of flange for controlling steel flange due to vertical composite live plus impact loads as calculated below (ksi).
M_{LL+IM} / Sc(n) or M_{LL+IM} / Sc(cr) as applicable.

fs + $^{fℓ}/_2$ (Service II): Sum of stresses as computed below (ksi).
fsDC1 + fsDC2 + fsDW + 1.3 fs($_{LL+IM}$) + $^{fℓ}/_2$

0.95RhFyf: Composite stress capacity for Service II loading according to Article 6.10.4.2 (ksi).

fs + $^{fℓ}/_3$ (Total)(Strength I): Sum of stresses as computed below on non-compact section (ksi).
1.25 (fsDC1 + fsDC2) + 1.5 fsDW + 1.75 fs($_{LL+IM}$) + $^{fℓ}/_3$

Øf Fn: Non-Compact composite positive or negative stress capacity for Strength I loading according to Article 6.10.7 or 6.10.8 (ksi).

Vf: Maximum factored shear range in span computed according to Article 6.10.10.

Note:
M_{LL} and R_{LL} include the effects of centrifugal force and superelevation.

GIRDER 9 MOMENT TABLE		0.4 Sp.1	Pier 1	0.5 Sp. 2	Pier 2	0.5 Sp. 3	Pier 3	0.6 Sp. 4
Is	(in^4)	80,888	182,100	101,040	206,467	77,768	162,466	77,768
Ic(n)	(in^4)	166,692	–	199,674	–	162,599	–	162,599
Ic(3n)	(in^4)	122,728	–	147,569	–	119,374	–	119,374
Ic(cr)	(in^4)	–	193,813	–	218,125	–	173,202	–
Ss	(in^3)	2,022	4,618	2,609	5,210	1,944	3,915	1,944
Sc(n)	(in^3)	2,693	–	3,338	–	2,615	–	2,615
Sc(3n)	(in^3)	2,421	–	3,031	–	2,346	–	2,346
Sc(cr)	(in^3)	–	4,723	–	5,310	–	4,012	–
Sxc	(in^3)	2,578	4,687	3,079	5,277	2,503	3,988	2,491
DC1	(k/')	1.00	1.21	1.05	1.26	1.00	1.17	1.00
MDC1	('k)	1,018	5,253	2,773	5,724	959	3,192	1,087
DC2	(k/')	0.01	-0.02	-0.05	-0.04	-0.01	-0.02	-0.09
MDC2	('k)	10	62	95	121	19	70	73
DW	(k/')	0.31	0.29	0.32	0.29	0.29	0.29	0.28
MDW	('k)	336	1,389	824	1,489	314	777	337
M_{LL+IM}	('k)	2,929	4,035	3,489	4,113	2,395	2,938	2,117
fℓ (Strength I)	(ksi)	4.7	4.7	5.8	5.8	8.7	6.1	5.6
Mu + 1/3 fℓ Sxc	('k)	7,254	16,263	11,213	17,332	6,452	10,906	5,886
Φf Mn	('k)	–	–	–	–	–	–	–
fs DC1	(ksi)	6.0	13.7	12.8	13.2	5.9	9.8	6.7
fs DC2	(ksi)	0.1	-0.2	-0.4	-0.3	-0.1	-0.2	-0.4
fs DW	(ksi)	1.7	3.5	3.3	3.4	1.6	2.3	1.7
fs (LL+IM)	(ksi)	13.1	10.3	12.5	9.3	11.0	8.8	9.7
fℓ (Service II)	(ksi)	3.3	3.4	4.3	4.2	6.5	4.3	4.1
fs+ $^{fl}/_2$ (Service II)	(ksi)	26.4	32.1	34.1	30.5	25.0	25.5	22.7
0.95Rh Fyf	(ksi)	47.5	47.5	47.5	47.5	47.5	47.5	47.5
fs + $^{fl}/_3$ (Total)(Strength I)	(ksi)	34.5	41.7	44.4	39.5	31.9	32.9	29.5
Φf Fn	(ksi)	50.0	46.3	50.0	47.3	50.0	44.2	50.0
Vf	(k)	28.9	30.0	24.6	32.3	24.9	32.0	28.5

GIRDER 9 REACTION TABLE		N. Abut.	Pier 1	Pier 2	Pier 3	S. Abut.
RDC1	(k)	51.1	251.9	273.0	197.6	48.6
RDC2	(k)	1.4	1.8	-11.1	-8.4	-2.1
RDW	(k)	14.8	66.0	69.6	49.9	13.6
R_{LL+IM}	(k)	91.1	197.2	166.2	172.3	77.9
Rtotal	(k)	158.5	516.9	497.7	411.5	138.1

GIRDER 10 MOMENT TABLE		0.4 Sp.1	Pier 1	0.5 Sp. 2	Pier 2	0.5 Sp. 3	Pier 3	0.6 Sp. 4
Is	(in^4)	80,888	182,100	101,040	206,467	77,768	162,466	77,768
Ic(n)	(in^4)	170,603	–	204,478	–	166,421	–	166,421
Ic(3n)	(in^4)	125,572	–	150,838	–	122,186	–	122,186
Ic(cr)	(in^4)	–	194,834	–	219,145	–	174,135	–
Ss	(in^3)	2,022	4,618	2,609	5,210	1,944	3,915	1,944
Sc(n)	(in^3)	2,712	–	3,361	–	2,634	–	2,634
Sc(3n)	(in^3)	2,442	–	3,054	–	2,367	–	2,367
Sc(cr)	(in^3)	–	4,732	–	5,319	–	4,020	–
Sxc	(in^3)	2,594	4,693	3,094	5,283	2,511	3,993	2,496
DC1	(k/')	1.06	1.27	1.10	1.32	1.05	1.23	1.05
MDC1	('k)	1,007	5,222	2,743	5,662	959	3,307	1,141
DC2	(k/')	0.02	0.00	-0.03	0.10	0.12	0.10	0.08
MDC2	('k)	36	16	46	279	234	338	66
DW	(k/')	0.33	0.31	0.34	0.30	0.30	0.31	0.31
MDW	('k)	359	1,456	859	1,546	330	843	369
M_{LL+IM}	('k)	2,528	3,508	3,097	3,621	2,252	2,636	1,985
fℓ (Strength I)	(ksi)	4.8	9.1	6.6	11.1	9.3	8.8	5.3
Mu + 1/3 fℓ Sxc	('k)	6,613	16,027	10,665	17,709	6,574	11,406	5,902
Φf Mn	('k)	–	–	–	–	–	–	–
fs DC1	(ksi)	6.0	13.6	12.6	13.0	5.9	10.1	7.0
fs DC2	(ksi)	0.2	0.0	-0.2	0.6	1.2	1.0	0.3
fs DW	(ksi)	1.8	3.7	3.4	3.5	1.7	2.5	1.9
fs (LL+IM)	(ksi)	11.2	8.9	11.1	8.2	10.3	7.9	9.0
fℓ (Service II)	(ksi)	3.4	7.0	5.0	8.4	7.0	6.7	3.9
fs+ $^{fl}/_2$ (Service II)	(ksi)	24.2	32.3	32.7	32.0	25.6	27.2	23.0
0.95Rh Fyf	(ksi)	47.5	47.5	47.5	47.5	47.5	47.5	47.5
fs + $^{fl}/_3$ (Total)(Strength I)	(ksi)	31.5	41.1	42.2	40.3	32.4	34.4	29.6
Φf Fn	(ksi)	50.0	46.3	50.0	47.4	50.0	44.2	50.0
Vf	(k)	25.1	25.7	22.6	26.0	22.3	27.6	25.4

GIRDER 10 REACTION TABLE		N. Abut.	Pier 1	Pier 2	Pier 3	S. Abut.
RDC1	(k)	50.9	252.1	271.4	205.2	51.4
RDC2	(k)	0.9	1.1	12.7	17.2	2.4
RDW	(k)	16.7	69.6	71.9	55.4	15.8
R_{LL+IM}	(k)	79.4	164.4	138.0	146.7	72.8
Rtotal	(k)	147.9	487.1	494.0	424.4	142.4

Is, Ss: Non-composite moment of inertia and section modulus of the steel section used for computing fs(Total-Strength I, and Service II) due to non-composite dead loads ($in.^4$ and $in.^3$).

Ic(n), Sc(n): Composite moment of inertia and section modulus of the steel and deck based upon the modular ratio, "n", used for computing fs(Total-Strength I, and Service II) in uncracked sections due to short term composite live loads ($in.^4$ and $in.^3$).

Ic(3n), Sc(3n): Composite moment of inertia and section modulus of the steel and deck based upon 3 times the modular ratio, "3n", used for computing fs(Total-Strength I, and Service II) in uncracked sections due to long-term composite (superimposed) dead loads ($in.^4$ and $in.^3$).

Ic(cr), Sc(cr): Composite moment of inertia and section modulus of the steel and longitudinal deck reinforcement, used for computing fs(Total-Strength I and Service II) in cracked sections, due to both short-term composite live loads and long-term composite (superimposed) dead loads ($in.^4$ and $in.^3$).

Sxc: Section modulus about the major axis of section to the controlling flange, tension or compression, taken as yield moment with respect to the controlling flange over the yield strength of the controlling flange ($in.^3$).

DC1: Un-factored non-composite dead load (kips/ft.).

MDC1: Un-factored moment due to non-composite dead load (kip-ft.).

DC2: Un-factored long-term composite (superimposed excluding future wearing surface) dead load (kips/ft.).

MDC2: Un-factored moment due to long-term composite (superimposed excluding future wearing surface) dead load (kip-ft.).

DW: Un-factored long-term composite (superimposed future wearing surface only) dead load (kips/ft.).

MDW: Un-factored moment due to long-term composite (superimposed future wearing surface only) dead load (kip-ft.).

M_{LL+IM}: Un-factored live load moment plus dynamic load allowance (impact)(kip-ft.).

Mu (Strength I): Factored design moment (kip-ft.).
1.25 (MDC1+ MDC2) + 1.5 MDW + 1.75 M_{LL+IM}

fℓ: Factored calculated normal stress at edge of flange for controlling flange plate due to lateral bending, Strength I or Service II as applicable (kip-ft.).

Øf Mn: Compact composite positive moment capacity computed according to Article 6.10.7.1 or non-slender negative moment capacity according to Article A6.1.1 or A6.1.2 (kip-ft.).

fs DC1: Un-factored stress at edge of flange for controlling steel flange due to vertical non-composite dead loads as calculated below (ksi).
MDC1 / Snc

fs DC2: Un-factored stress at edge of flange for controlling steel flange due to vertical composite dead loads as calculated below (ksi).
MDC2 / Sc(3n) or MDC2 / Sc(cr) as applicable.

fs DW: Un-factored stress at edge of flange for controlling steel flange due to vertical composite future wearing surface loads as calculated below (ksi).
MDW / Sc(3n) or MDW / Sc(cr) as applicable.

fs (LL+IM): Un-factored stress at edge of flange for controlling steel flange due to vertical composite live plus impact loads as calculated below (ksi).
M_{LL+IM} / Sc(n) or M_{LL+IM} / Sc(cr) as applicable.

fs + $^{fl}/_2$ (Service II): Sum of stresses as computed below (ksi).
fsDC1 + fsDC2 + fsDW + 1.3 fs($_{LL+IM}$) + $^{fl}/_2$

0.95RhFyf: Composite stress capacity for Service II loading according to Article 6.10.4.2 (ksi).

fs + $^{fl}/_3$ (Total)(Strength I): Sum of stresses as computed below on non-compact section (ksi).
1.25 (fsDC1 + fsDC2) + 1.5 fsDW + 1.75 fs($_{LL+IM}$) + $^{fl}/_3$

Øf Fn: Non-Compact composite positive or negative stress capacity for Strength I loading according to Article 6.10.7 or 6.10.8 (ksi).

Vf: Maximum factored shear range in span computed according to Article 6.10.10.

Note:
M_{LL} and R_{LL} include the effects of centrifugal force and superelevation.

Michael Baker INTERNATIONAL
200 W Adams Street
Suite 1850
Chicago, IL 60606
PH: 312.707.8770
FAX: 312.707.8804

USER NAME = DLamb	DESIGNED - JMK	REVISED -
	CHECKED - JTB	REVISED -
PLOT SCALE = 0:2.0000 ':" / in.	DRAWN - ADM	REVISED -
PLOT DATE = 6/6/2023	CHECKED - JMK	REVISED -

STATE OF ILLINOIS
DEPARTMENT OF TRANSPORTATION

GIRDER MOMENT & REACTION TABLES 5
STRUCTURE NO. 090-0182

SHEET S-129 OF S-194 SHEETS

F.A.P. RTE.	SECTION	COUNTY	TOTAL SHEETS	SHEET NO.
VAR.	13 (HVB, HB-3) BR-1;R	TAZEWELL	1173	655
		CONTRACT NO. 68C55		
	ILLINOIS	FED. AID PROJECT		

GIRDER 11 MOMENT TABLE		0.4 Sp.1	Pier 1	0.5 Sp. 2	Pier 2	0.5 Sp. 3	Pier 3	0.6 Sp. 4
Is	(in^4)	80,888	182,100	101,040	206,467	77,768	162,466	77,768
Ic(n)	(in^4)	177,541	–	194,005	–	163,010	–	168,095
Ic(3n)	(in^4)	130,925	–	143,877	–	119,670	–	123,455
Ic(cr)	(in^4)	–	192,697	–	217,418	–	173,959	–
Ss	(in^3)	2,022	4,618	2,609	5,210	1,944	3,915	1,944
Sc(n)	(in^3)	2,746	–	3,310	–	2,617	–	2,643
Sc(3n)	(in^3)	2,480	–	3,004	–	2,348	–	2,376
Sc(cr)	(in^3)	–	4,714	–	5,304	–	4,019	–
Sxc	(in^3)	2,620	4,681	3,061	5,275	2,485	3,992	2,490
DC1	(k/')	1.19	1.15	0.98	1.22	1.00	1.22	1.08
MDC1	('k)	1,012	5,172	2,715	5,509	983	3,402	1,201
DC2	(k/')	0.04	0.02	0.01	0.24	0.25	0.24	0.26
MDC2	('k)	68	92	13	697	474	842	219
DW	(k/')	0.37	0.30	0.32	0.29	0.31	0.33	0.34
MDW	('k)	396	1,438	828	1,507	334	881	396
M_{LL+IM}	('k)	2,235	2,846	2,487	3,335	2,224	2,699	2,060
fℓ (Strength I)	(ksi)	8.0	3.0	5.0	5.2	8.5	5.2	5.4
Mu + 1/3 fℓ Sxc	('k)	6,439	14,109	9,431	16,615	6,799	11,924	6,347
Φf Mn	('k)	–	–	–	–	–	–	–
fs DC1	(ksi)	6.0	13.4	12.5	12.7	6.1	10.4	7.4
fs DC2	(ksi)	0.3	0.2	0.1	1.6	2.4	2.5	1.1
fs DW	(ksi)	1.9	3.7	3.3	3.4	1.7	2.6	2.0
fs (LL+IM)	(ksi)	9.8	7.2	9.0	7.5	10.2	8.1	9.4
fℓ (Service II)	(ksi)	5.9	2.2	3.8	3.8	6.3	3.8	3.9
fs+ $^{fl}/_2$ (Service II)	(ksi)	23.9	27.9	29.4	29.4	26.6	28.0	24.7
0.95Rh Fyf	(ksi)	47.5	47.5	47.5	47.5	47.5	47.5	47.5
fs + $^{fl}/_3$ (Total)(Strength I)	(ksi)	30.6	36.3	38.1	37.9	33.8	36.0	31.8
Φf Fn	(ksi)	50.0	46.3	50.0	47.4	50.0	44.2	50.0
Vf	(k)	21.9	24.1	21.6	24.4	21.5	25.4	23.8

GIRDER 11 REACTION TABLE		N. Abut.	Pier 1	Pier 2	Pier 3	S. Abut.
RDC1	(k)	51.0	248.9	267.4	209.1	54.0
RDC2	(k)	1.7	2.0	41.9	46.9	8.7
RDW	(k)	17.7	69.6	70.9	58.0	17.1
R_{LL+IM}	(k)	76.8	133.0	136.8	151.4	73.0
Rtotal	(k)	147.1	453.6	517.0	465.3	152.8

GIRDER 12 MOMENT TABLE		0.4 Sp.1	Pier 1	0.5 Sp. 2	Pier 2	0.5 Sp. 3	Pier 3	0.6 Sp. 4
Is	(in^4)	–	182,100	101,040	230,824	77,768	162,466	77,768
Ic(n)	(in^4)	–	–	206,668	–	162,462	–	167,606
Ic(3n)	(in^4)	–	–	152,373	–	119,275	–	123,081
Ic(cr)	(in^4)	–	190,659	–	241,589	–	173,830	–
Ss	(in^3)	–	4,618	2,609	5,342	1,944	3,915	1,944
Sc(n)	(in^3)	–	–	3,371	–	2,614	–	2,640
Sc(3n)	(in^3)	–	–	3,065	–	2,345	–	2,373
Sc(cr)	(in^3)	–	4,696	–	5,754	–	4,018	–
Sxc	(in^3)	–	4,670	3,094	5,617	2,473	3,990	2,474
DC1	(k/')	–	1.06	1.09	1.35	1.07	1.29	1.15
MDC1	('k)	–	4,971	2,793	5,922	999	3,501	1,268
DC2	(k/')	–	0.01	0.00	0.43	0.36	0.40	0.47
MDC2	('k)	–	49	9	1,223	677	1,404	392
DW	(k/')	–	0.28	0.35	0.30	0.32	0.33	0.35
MDW	('k)	–	1,342	896	1,579	344	904	419
M_{LL+IM}	('k)	–	2,423	2,522	3,704	2,323	3,081	2,340
fℓ (Strength I)	(ksi)	–	2.4	6.4	4.2	8.8	4.7	5.6
Mu + 1/3 fℓ Sxc	('k)	–	12,842	9,812	18,441	7,278	13,396	7,183
Φf Mn	('k)	–	–	–	–	–	–	–
fs DC1	(ksi)	–	12.9	12.8	13.3	6.2	10.7	7.8
fs DC2	(ksi)	–	0.1	0.0	2.6	3.5	4.2	2.0
fs DW	(ksi)	–	3.4	3.5	3.3	1.8	2.7	2.1
fs (LL+IM)	(ksi)	–	6.2	9.0	7.7	10.7	9.2	10.6
fℓ (Service II)	(ksi)	–	1.8	4.8	3.1	6.6	3.5	4.1
fs+ $^{fl}/_2$ (Service II)	(ksi)	–	25.4	30.4	30.7	28.5	31.3	27.8
0.95Rh Fyf	(ksi)	–	47.5	47.5	47.5	47.5	47.5	47.5
fs + $^{fl}/_3$ (Total)(Strength I)	(ksi)	–	33.1	39.2	39.7	36.3	40.4	35.9
Φf Fn	(ksi)	–	46.3	50.0	50.0	50.0	44.2	50.0
Vf	(k)	–	24.8	21.9	33.5	27.5	34.0	34.4

GIRDER 12 REACTION TABLE		N. Abut.	Pier 1	Pier 2	Pier 3	S. Abut.
RDC1	(k)	--	246.9	272.3	213.8	56.6
RDC2	(k)	--	2.2	72.6	87.1	22.0
RDW	(k)	--	68.2	70.8	58.8	17.4
R_{LL+IM}	(k)	--	121.7	155.7	182.1	89.8
Rtotal	(k)	--	439.0	571.3	541.8	185.8

Is, Ss: Non-composite moment of inertia and section modulus of the steel section used for computing fs(Total-Strength I, and Service II) due to non-composite dead loads ($in.^4$ and $in.^3$).

Ic(n), Sc(n): Composite moment of inertia and section modulus of the steel and deck based upon the modular ratio, "n", used for computing fs(Total-Strength I, and Service II) in uncracked sections due to short term composite live loads ($in.^4$ and $in.^3$).

Ic(3n), Sc(3n): Composite moment of inertia and section modulus of the steel and deck based upon 3 times the modular ratio, "3n", used for computing fs(Total-Strength I, and Service II) in uncracked sections due to long-term composite (superimposed) dead loads ($in.^4$ and $in.^3$).

Ic(cr), Sc(cr): Composite moment of inertia and section modulus of the steel and longitudinal deck reinforcement, used for computing fs(Total-Strength I and Service II) in cracked sections, due to both short-term composite live loads and long-term composite (superimposed) dead loads ($in.^4$ and $in.^3$).

Sxc: Section modulus about the major axis of section to the controlling flange, tension or compression, taken as yield moment with respect to the controlling flange over the yield strength of the controlling flange ($in.^3$).

DC1: Un-factored non-composite dead load (kips/ft.).

MDC1: Un-factored moment due to non-composite dead load (kip-ft.).

DC2: Un-factored long-term composite (superimposed excluding future wearing surface) dead load (kips/ft.).

MDC2: Un-factored moment due to long-term composite (superimposed excluding future wearing surface) dead load (kip-ft.).

DW: Un-factored long-term composite (superimposed future wearing surface only) dead load (kips/ft.).

MDW: Un-factored moment due to long-term composite (superimposed future wearing surface only) dead load (kip-ft.).

M_{LL+IM}: Un-factored live load moment plus dynamic load allowance (impact)(kip-ft.).

Mu (Strength I): Factored design moment (kip-ft.).
1.25 (MDC1+ MDC2) + 1.5 MDW + 1.75 M_{LL+IM}

fℓ: Factored calculated normal stress at edge of flange for controlling flange plate due to lateral bending, Strength I or Service II as applicable (kip-ft.).

Øf Mn: Compact composite positive moment capacity computed according to Article 6.10.7.1 or non-slender negative moment capacity according to Article A6.1.1 or A6.1.2 (kip-ft.).

fs DC1: Un-factored stress at edge of flange for controlling steel flange due to vertical non-composite dead loads as calculated below (ksi).
MDC1 / Snc

fs DC2: Un-factored stress at edge of flange for controlling steel flange due to vertical composite dead loads as calculated below (ksi).
MDC2 / Sc(3n) or MDC2 / Sc(cr) as applicable.

fs DW: Un-factored stress at edge of flange for controlling steel flange due to vertical composite future wearing surface loads as calculated below (ksi).
MDW / Sc(3n) or MDW / Sc(cr) as applicable.

fs (LL+IM): Un-factored stress at edge of flange for controlling steel flange due to vertical composite live plus impact loads as calculated below (ksi).
M_{LL+IM} / Sc(n) or M_{LL+IM} / Sc(cr) as applicable.

fs + $^{fl}/_2$ (Service II): Sum of stresses as computed below (ksi).
fsDC1 + fsDC2 + fsDW + 1.3 fs($_{LL+IM}$) + $^{fl}/_2$

0.95RhFyf: Composite stress capacity for Service II loading according to Article 6.10.4.2 (ksi).

fs + $^{fl}/_3$ (Total)(Strength I): Sum of stresses as computed below on non-compact section (ksi).
1.25 (fsDC1 + fsDC2) + 1.5 fsDW + 1.75 fs($_{LL+IM}$) + $^{fl}/_3$

Øf Fn: Non-Compact composite positive or negative stress capacity for Strength I loading according to Article 6.10.7 or 6.10.8 (ksi).

Vf: Maximum factored shear range in span computed according to Article 6.10.10.

Note:
M_{LL} and R_{LL} include the effects of centrifugal force and superelevation.

Michael Baker INTERNATIONAL
200 W Adams Street
Suite 1800
Chicago, IL 60606
PH: 312.707.8770
FAX: 312.707.8804

USER NAME = DLamb	DESIGNED - JMK	REVISED -
	CHECKED - JTB	REVISED -
PLOT SCALE = 0:2,0000 ':" / in.	DRAWN - ADM	REVISED -
PLOT DATE = 6/6/2023	CHECKED - JMK	REVISED -

STATE OF ILLINOIS
DEPARTMENT OF TRANSPORTATION

GIRDER MOMENT & REACTION TABLES 6
STRUCTURE NO. 090-0182

SHEET S-130 OF S-194 SHEETS

F.A.P. RTE.	SECTION	COUNTY	TOTAL SHEETS	SHEET NO.
VAR.	13 (HVB, HB-3) BR-1;R	TAZEWELL	1173	656
		CONTRACT NO. 68C55		
	ILLINOIS	FED. AID PROJECT		

GIRDER 13 MOMENT TABLE						
		0.4 Sp.1	Pier 1	0.5 Sp. 2	Pier 2C	0.6 Sp. 3C
Is	(in^4)	–	194,878	107,155	355,465	168,305
Ic(n)	(in^4)	–	–	212,733	–	316,583
Ic(3n)	(in^4)	–	–	159,089	–	234,916
Ic(cr)	(in^4)	–	203,102	–	369,503	–
Ss	(in^3)	–	4,696	2,662	8,038	4,653
Sc(n)	(in^3)	–	–	3,394	–	5,616
Sc(3n)	(in^3)	–	–	3,101	–	5,191
Sc(cr)	(in^3)	–	4,766	–	8,571	–
Sxc	(in^3)	–	4,742	3,119	8,346	5,282
DC1	(k/')	–	1.09	1.25	1.75	1.38
MDC1	('k)	–	5,355	2,894	11,323	4,318
DC2	(k/')	–	0.06	0.07	0.36	0.50
MDC2	('k)	–	226	126	1,834	1,219
DW	(k/')	–	0.31	0.37	0.44	0.61
MDW	('k)	–	1,453	943	2,706	1,223
M_{LL+IM}	('k)	–	2,235	2,236	5,647	5,859
fℓ (Strength I)	(ksi)	–	1.9	5.6	7.0	12.3
Mu + 1/3 fℓ Sxc	('k)	–	13,324	9,594	32,006	20,808
Φf Mn	('k)	–	–	–	–	–
fs DC1	(ksi)	–	13.7	13.0	16.9	11.1
fs DC2	(ksi)	–	0.6	0.5	2.6	2.8
fs DW	(ksi)	–	3.7	3.6	3.8	2.8
fs ($_{LL}$+IM)	(ksi)	–	5.6	7.9	7.9	12.5
fℓ (Service II)	(ksi)	–	1.4	4.2	5.3	9.2
fs+ $^{f\ell}/_2$ (Service II)	(ksi)	–	25.9	29.6	36.2	37.7
0.95Rh Fyf	(ksi)	–	47.5	47.5	47.5	47.5
fs + $^{f\ell}/_3$ (Total)(Strength I)	(ksi)	–	33.8	38.1	46.2	47.7
Φf Fn	(ksi)	–	46.3	50.0	50.0	50.0
Vf	(k)	–	19.3	21.8	39.4	38.7

GIRDER 13 REACTION TABLE					
		N. Abut.	Pier 1	Pier 2C	Pier 3C-N
RDC1	(k)	--	258.4	533.5	144.9
RDC2	(k)	--	7.7	98.9	41.9
RDW	(k)	--	71.3	128.4	40.7
R_{LL+IM}	(k)	--	113.2	257.3	154.2
Rtotal	(k)	--	450.5	1018.1	381.7

GIRDER 14 MOMENT TABLE						
		0.4 Sp.1	Pier 1	0.5 Sp. 2	Pier 2C	0.6 Sp. 3C
Is	(in^4)	90,250	194,878	107,155	355,465	141,601
Ic(n)	(in^4)	193,314	–	211,131	–	259,638
Ic(3n)	(in^4)	143,484	–	157,937	–	197,201
Ic(cr)	(in^4)	–	205,662	–	370,575	–
Ss	(in^3)	2,256	4,696	2,662	8,038	3,475
Sc(n)	(in^3)	2,995	–	3,386	–	4,235
Sc(3n)	(in^3)	2,722	–	3,093	–	3,909
Sc(cr)	(in^3)	–	4,787	–	8,613	–
Sxc	(in^3)	2,863	4,757	3,117	8,392	4,000
DC1	(k/')	1.27	1.23	1.18	1.73	1.30
MDC1	('k)	1,129	5,231	2,830	10,302	2,918
DC2	(k/')	0.11	0.10	0.13	0.30	0.32
MDC2	('k)	164	403	234	1,545	771
DW	(k/')	0.41	0.31	0.36	0.42	0.40
MDW	('k)	436	1,483	920	2,568	803
M_{LL+IM}	('k)	2,252	2,509	2,327	4,650	3,188
fℓ (Strength I)	(ksi)	8.0	2.7	5.2	6.4	11.8
Mu + 1/3 fℓ Sxc	('k)	6,844	14,012	9,734	28,281	12,704
Φf Mn	('k)	–	–	–	–	–
fs DC1	(ksi)	6.0	13.4	12.8	15.4	10.1
fs DC2	(ksi)	0.7	1.0	0.9	2.2	2.4
fs DW	(ksi)	1.9	3.7	3.6	3.6	2.5
fs ($_{LL}$+IM)	(ksi)	9.0	6.3	8.2	6.5	9.0
fℓ (Service II)	(ksi)	6.0	2.0	3.9	4.8	8.8
fs+ $^{f\ell}/_2$ (Service II)	(ksi)	23.4	27.3	29.9	31.9	31.1
0.95Rh Fyf	(ksi)	47.5	47.5	47.5	47.5	47.5
fs + $^{f\ell}/_3$ (Total)(Strength I)	(ksi)	29.7	35.4	38.6	40.7	39.0
Φf Fn	(ksi)	50.0	45.8	50.0	50.0	50.0
Vf	(k)	20.9	20.8	20.0	26.6	23.9

GIRDER 14 REACTION TABLE					
		N. Abut.	Pier 1	Pier 2C	Pier 3C-N
RDC1	(k)	54.8	269.4	427.8	96.1
RDC2	(k)	3.6	17.1	62.8	19.4
RDW	(k)	18.8	75.0	106.4	27.1
R_{LL+IM}	(k)	82.0	127.0	168.0	91.4
Rtotal	(k)	159.2	488.5	765.1	234.0

Is, Ss: Non-composite moment of inertia and section modulus of the steel section used for computing fs(Total-Strength I, and Service II) due to non-composite dead loads ($in.^4$ and $in.^3$).

Ic(n), Sc(n): Composite moment of inertia and section modulus of the steel and deck based upon the modular ratio, "n", used for computing fs(Total-Strength I, and Service II) in uncracked sections due to short term composite live loads ($in.^4$ and $in.^3$).

Ic(3n), Sc(3n): Composite moment of inertia and section modulus of the steel and deck based upon 3 times the modular ratio, "3n", used for computing fs(Total-Strength I, and Service II) in uncracked sections due to long-term composite (superimposed) dead loads ($in.^4$ and $in.^3$).

Ic(cr), Sc(cr): Composite moment of inertia and section modulus of the steel and longitudinal deck reinforcement, used for computing fs(Total-Strength I and Service II) in cracked sections, due to both short-term composite live loads and long-term composite (superimposed) dead loads ($in.^4$ and $in.^3$).

Sxc: Section modulus about the major axis of section to the controlling flange, tension or compression, taken as yield moment with respect to the controlling flange over the yield strength of the controlling flange ($in.^3$).

DC1: Un-factored non-composite dead load (kips/ft.).

MDC1: Un-factored moment due to non-composite dead load (kip-ft.).

DC2: Un-factored long-term composite (superimposed excluding future wearing surface) dead load (kips/ft.).

MDC2: Un-factored moment due to long-term composite (superimposed excluding future wearing surface) dead load (kip-ft.).

DW: Un-factored long-term composite (superimposed future wearing surface only) dead load (kips/ft.).

MDW: Un-factored moment due to long-term composite (superimposed future wearing surface only) dead load (kip-ft.).

M_{LL+IM}: Un-factored live load moment plus dynamic load allowance (impact)(kip-ft.).

Mu (Strength I): Factored design moment (kip-ft.).
1.25 (MDC1+ MDC2) + 1.5 MDW + 1.75 M_{LL+IM}

fℓ: Factored calculated normal stress at edge of flange for controlling flange plate due to lateral bending, Strength I or Service II as applicable (kip-ft.).

Øf Mn: Compact composite positive moment capacity computed according to Article 6.10.7.1 or non-slender negative moment capacity according to Article A6.1.1 or A6.1.2 (kip-ft.).

fs DC1: Un-factored stress at edge of flange for controlling steel flange due to vertical non-composite dead loads as calculated below (ksi).
MDC1 / Snc

fs DC2: Un-factored stress at edge of flange for controlling steel flange due to vertical composite dead loads as calculated below (ksi).
MDC2 / Sc(3n) or MDC2 / Sc(cr) as applicable.

fs DW: Un-factored stress at edge of flange for controlling steel flange due to vertical composite future wearing surface loads as calculated below (ksi).
MDW / Sc(3n) or MDW / Sc(cr) as applicable.

fs ($_{LL}$+IM): Un-factored stress at edge of flange for controlling steel flange due to vertical composite live plus impact loads as calculated below (ksi).
M_{LL+IM} / Sc(n) or M_{LL+IM} / Sc(cr) as applicable.

fs + $^{f\ell}/_2$ (Service II): Sum of stresses as computed below (ksi).
fsDC1 + fsDC2 + fsDW + 1.3 fs($_{LL+IM}$) + $^{f\ell}/_2$

0.95RhFyf: Composite stress capacity for Service II loading according to Article 6.10.4.2 (ksi).

fs + $^{f\ell}/_3$ (Total)(Strength I): Sum of stresses as computed below on non-compact section (ksi).
1.25 (fsDC1 + fsDC2) + 1.5 fsDW + 1.75 fs($_{LL+IM}$) + $^{f\ell}/_3$

Øf Fn: Non-Compact composite positive or negative stress capacity for Strength I loading according to Article 6.10.7 or 6.10.8 (ksi).

Vf: Maximum factored shear range in span computed according to Article 6.10.10.

Note:
M_{LL} and R_{LL} include the effects of centrifugal force and superelevation.

Michael Baker INTERNATIONAL
200 W Adams Street
Suite 1800
Chicago, IL 60606
PH: 312.707.8770
FAX: 312.707.8804

USER NAME = DLamb	DESIGNED - JMK	REVISED -	
	CHECKED - JTB	REVISED -	
PLOT SCALE = 0:2.0000 ':" / in.	DRAWN - ADM	REVISED -	
PLOT DATE = 6/6/2023	CHECKED - JMK	REVISED -	

STATE OF ILLINOIS
DEPARTMENT OF TRANSPORTATION

GIRDER MOMENT & REACTION TABLES 7
STRUCTURE NO. 090-0182

SHEET S-131 OF S-194 SHEETS

F.A.P. RTE.	SECTION	COUNTY	TOTAL SHEETS	SHEET NO.
VAR.	13 (HVB, HB-3) BR-1;R	TAZEWELL	1173	657
		CONTRACT NO. 68C55		
	ILLINOIS	FED. AID PROJECT		

GIRDER 15 MOMENT TABLE						
		0.4 Sp.1	Pier 1	0.5 Sp. 2	Pier 2C	0.6 Sp. 3C
Is	(in^4)	118,933	230,824	124,625	255,173	141,601
Ic(n)	(in^4)	228,513	-	242,356	-	259,638
Ic(3n)	(in^4)	171,991	-	181,174	-	197,201
Ic(cr)	(in^4)	-	245,200	-	269,508	-
Ss	(in^3)	2,955	5,801	3,201	5,923	3,475
Sc(n)	(in^3)	3,690	-	3,984	-	4,235
Sc(3n)	(in^3)	3,388	-	3,663	-	3,909
Sc(cr)	(in^3)	-	5,919	-	6,483	-
Sxc	(in^3)	3,556	5,882	3,708	6,280	4,065
DC1	(k/')	1.25	1.48	1.26	1.53	1.30
MDC1	('k)	1,467	6,076	3,167	7,179	2,113
DC2	(k/')	0.22	0.21	0.24	0.23	0.22
MDC2	('k)	335	878	430	1,194	531
DW	(k/')	0.43	0.37	0.41	0.33	0.30
MDW	('k)	464	1,743	1,034	1,979	597
M_{L+IM}	('k)	2,835	3,556	3,226	3,846	2,805
fℓ (Strength I)	(ksi)	5.2	7.4	6.2	10.0	11.7
Mu + 1/3 fℓ Sxc	('k)	8,424	18,744	12,336	21,904	10,429
Φf Mn	('k)	-	-	-	-	-
fs DC1	(ksi)	6.0	12.6	11.9	14.5	7.3
fs DC2	(ksi)	1.2	1.8	1.4	2.2	1.6
fs DW	(ksi)	1.6	3.5	3.4	3.7	1.8
fs (L+IM)	(ksi)	9.2	7.2	9.7	7.1	7.9
fℓ (Service II)	(ksi)	3.9	5.7	4.7	7.6	8.7
fs+ $f_\ell/2$ (Service II)	(ksi)	22.7	30.1	31.6	33.5	25.5
0.95Rh Fyf	(ksi)	47.5	47.5	47.5	47.5	47.5
fs + $f_\ell/3$ (Total)(Strength I)	(ksi)	29.3	38.3	40.8	42.2	31.7
Φf Fn	(ksi)	50.0	48.1	50.0	50.0	50.0
Vf	(k)	24.6	25.4	22.3	25.8	22.0

GIRDER 15 REACTION TABLE					
		N. Abut.	Pier 1	Pier 2C	Pier 3C-N
RDC1	(k)	62.8	296.6	357.4	72.9
RDC2	(k)	9.8	42.9	53.8	12.2
RDW	(k)	20.1	82.3	93.4	20.7
R_{L+IM}	(k)	82.9	164.6	155.9	84.2
Rtotal	(k)	175.7	586.3	660.6	190.0

GIRDER 16 MOMENT TABLE						
		0.4 Sp.1	Pier 1	0.5 Sp. 2	Pier 2C	0.6 Sp. 3C
Is	(in^4)	118,933	230,824	124,625	255,173	141,601
Ic(n)	(in^4)	224,128	-	237,575	-	254,671
Ic(3n)	(in^4)	168,966	-	177,928	-	193,955
Ic(cr)	(in^4)	-	244,189	-	268,499	-
Ss	(in^3)	2,955	5,801	3,201	5,923	3,475
Sc(n)	(in^3)	3,670	-	3,963	-	4,213
Sc(3n)	(in^3)	3,368	-	3,642	-	3,888
Sc(cr)	(in^3)	-	5,911	-	6,443	-
Sxc	(in^3)	3,543	5,876	3,699	6,276	4,115
DC1	(k/')	1.27	1.50	1.28	1.55	1.32
MDC1	('k)	1,375	6,131	3,031	6,355	1,264
DC2	(k/')	0.32	0.34	0.35	0.25	0.10
MDC2	('k)	496	1,391	616	1,259	252
DW	(k/')	0.39	0.36	0.39	0.29	0.19
MDW	('k)	422	1,711	986	1,771	373
M_{L+IM}	('k)	3,244	4,336	3,763	4,443	2,723
fℓ (Strength I)	(ksi)	4.2	5.4	5.1	5.1	10.5
Mu + 1/3 fℓ Sxc	('k)	9,065	20,442	13,150	20,836	8,417
Φf Mn	('k)	-	-	-	-	-
fs DC1	(ksi)	5.6	12.7	11.4	12.9	4.4
fs DC2	(ksi)	1.8	2.8	2.0	2.3	0.8
fs DW	(ksi)	1.5	3.5	3.3	3.3	1.2
fs (L+IM)	(ksi)	10.6	8.8	11.4	8.3	7.8
fℓ (Service II)	(ksi)	3.1	4.1	3.8	3.8	7.8
fs+ $f_\ell/2$ (Service II)	(ksi)	24.2	32.5	33.4	31.2	20.3
0.95Rh Fyf	(ksi)	47.5	47.5	47.5	47.5	47.5
fs + $f_\ell/3$ (Total)(Strength I)	(ksi)	31.4	41.8	43.3	40.2	25.2
Φf Fn	(ksi)	50.0	48.1	50.0	50.0	50.0
Vf	(k)	34.6	35.9	29.4	35.9	29.3

GIRDER 16 REACTION TABLE					
		N. Abut.	Pier 1	Pier 2C	Pier 3C-N
RDC1	(k)	63.2	312.0	302.4	49.3
RDC2	(k)	23.0	81.1	62.9	11.8
RDW	(k)	18.8	84.3	79.2	12.6
R_{L+IM}	(k)	100.7	213.0	189.1	89.8
Rtotal	(k)	205.7	690.4	633.5	163.6

Is, Ss: Non-composite moment of inertia and section modulus of the steel section used for computing fs(Total-Strength I, and Service II) due to non-composite dead loads ($in.^4$ and $in.^3$).

Ic(n), Sc(n): Composite moment of inertia and section modulus of the steel and deck based upon the modular ratio, "n", used for computing fs(Total-Strength I, and Service II) in uncracked sections due to short term composite live loads ($in.^4$ and $in.^3$).

Ic(3n), Sc(3n): Composite moment of inertia and section modulus of the steel and deck based upon 3 times the modular ratio, "3n", used for computing fs(Total-Strength I, and Service II) in uncracked sections due to long-term composite (superimposed) dead loads ($in.^4$ and $in.^3$).

Ic(cr), Sc(cr): Composite moment of inertia and section modulus of the steel and longitudinal deck reinforcement, used for computing fs(Total-Strength I and Service II) in cracked sections, due to both short-term composite live loads and long-term composite (superimposed) dead loads ($in.^4$ and $in.^3$).

Sxc: Section modulus about the major axis of section to the controlling flange, tension or compression, taken as yield moment with respect to the controlling flange over the yield strength of the controlling flange ($in.^3$).

DC1: Un-factored non-composite dead load (kips/ft.).

MDC1: Un-factored moment due to non-composite dead load (kip-ft.).

DC2: Un-factored long-term composite (superimposed excluding future wearing surface) dead load (kips/ft.).

MDC2: Un-factored moment due to long-term composite (superimposed excluding future wearing surface) dead load (kip-ft.).

DW: Un-factored long-term composite (superimposed future wearing surface only) dead load (kips/ft.).

MDW: Un-factored moment due to long-term composite (superimposed future wearing surface only) dead load (kip-ft.).

M_{L+IM}: Un-factored live load moment plus dynamic load allowance (impact)(kip-ft.).

Mu (Strength I): Factored design moment (kip-ft.).
1.25 (MDC1+ MDC2) + 1.5 MDW + 1.75 M_{L+IM}

fℓ: Factored calculated normal stress at edge of flange for controlling flange plate due to lateral bending, Strength I or Service II as applicable (kip-ft.).

Øf Mn: Compact composite positive moment capacity computed according to Article 6.10.7.1 or non-slender negative moment capacity according to Article A6.1.1 or A6.1.2 (kip-ft.).

fs DC1: Un-factored stress at edge of flange for controlling steel flange due to vertical non-composite dead loads as calculated below (ksi).
MDC1 / Snc

fs DC2: Un-factored stress at edge of flange for controlling steel flange due to vertical composite dead loads as calculated below (ksi).
MDC2 / Sc(3n) or MDC2 / Sc(cr) as applicable.

fs DW: Un-factored stress at edge of flange for controlling steel flange due to vertical composite future wearing surface loads as calculated below (ksi).
MDW / Sc(3n) or MDW / Sc(cr) as applicable.

fs (L+IM): Un-factored stress at edge of flange for controlling steel flange due to vertical composite live plus impact loads as calculated below (ksi).
M_{L+IM} / Sc(n) or M_{L+IM} / Sc(cr) as applicable.

fs + $f_\ell/2$ (Service II): Sum of stresses as computed below (ksi).
fsDC1 + fsDC2 + fsDW + 1.3 fs(L+IM) + $f_\ell/2$

0.95RhFyf: Composite stress capacity for Service II loading according to Article 6.10.4.2 (ksi).

fs + $f_\ell/3$ (Total)(Strength I): Sum of stresses as computed below on non-compact section (ksi).
1.25 (fsDC1 + fsDC2) + 1.5 fsDW + 1.75 fs(L+IM) + $f_\ell/3$

Øf Fn: Non-Compact composite positive or negative stress capacity for Strength I loading according to Article 6.10.7 or 6.10.8 (ksi).

Vf: Maximum factored shear range in span computed according to Article 6.10.10.

Note:
M_L and R_L include the effects of centrifugal force and superelevation.

Michael Baker INTERNATIONAL
200 W Adams Street
Suite 1850
Chicago, IL 60606
PH: 312.707.8770
FAX: 312.707.8804

USER NAME = DLamb	DESIGNED - JMK	REVISED -	
	CHECKED - JTB	REVISED -	
PLOT SCALE = 0:2,0000 ':" / in.	DRAWN - ADM	REVISED -	
PLOT DATE = 6/6/2023	CHECKED - JMK	REVISED -	

STATE OF ILLINOIS
DEPARTMENT OF TRANSPORTATION

GIRDER MOMENT & REACTION TABLES 8
STRUCTURE NO. 090-0182

SHEET S-132 OF S-194 SHEETS

F.A.P. RTE.	SECTION	COUNTY	TOTAL SHEETS	SHEET NO.
VAR.	13 (HVB, HB-3) BR-1;R	TAZEWELL	1173	658
		CONTRACT NO. 68C55		
	ILLINOIS	FED. AID PROJECT		

GIRDER 13 MOMENT TABLE				
		0.4 Sp. 4C	Pier 4C	0.6 Sp. 5C
Is	(in^4)	46,633	67,569	46,633
Ic(n)	(in^4)	96,366	–	96,366
Ic(3n)	(in^4)	72,135	–	72,135
Ic(cr)	(in^4)	–	74,685	–
Ss	(in^3)	1,651	2,242	1,651
Sc(n)	(in^3)	2,080	–	2,080
Sc(3n)	(in^3)	1,921	–	1,921
Sc(cr)	(in^3)	–	2,639	–
Sxc	(in^3)	1,972	2,530	1,962
DC1	(k/')	1.16	1.25	1.16
MDC1	('k)	1,150	2,057	1,263
DC2	(k/')	0.38	0.46	0.41
MDC2	('k)	283	646	307
DW	(k/')	0.46	0.44	0.50
MDW	('k)	353	589	383
M_{LL+IM}	('k)	2,290	2,030	2,382
fℓ (Strength I)	(ksi)	12.9	4.7	17.3
Mu + 1/3 fℓ Sxc	('k)	7,034	8,146	7,647
Φf Mn	('k)	–	–	–
fs DC1	(ksi)	8.4	11.0	9.2
fs DC2	(ksi)	1.8	2.9	1.9
fs DW	(ksi)	2.2	2.7	2.4
fs ($_{LL}$+IM)	(ksi)	13.2	9.2	13.7
fℓ (Service II)	(ksi)	9.8	3.5	13.1
fs+ $^{f\ell}/_2$ (Service II)	(ksi)	34.4	30.4	37.9
0.95Rh Fyf	(ksi)	47.5	47.5	47.5
fs + $^{f\ell}/_3$ (Total)(Strength I)	(ksi)	43.4	39.2	47.3
Φf Fn	(ksi)	50.0	50.0	50.0
Vf	(k)	39.2	38.3	37.3

GIRDER 13 REACTION TABLE				
		Pier 3C-S	Pier 4C	S. Abut. C
RDC1	(k)	54.9	167.4	59.4
RDC2	(k)	18.7	53.1	20.1
RDW	(k)	16.7	48.7	18.2
R_{LL+IM}	(k)	100.7	142.0	99.0
Rtotal	(k)	191.0	411.2	196.6

GIRDER 14 MOMENT TABLE				
		0.4 Sp. 4C	Pier 4C	0.6 Sp. 5C
Is	(in^4)	46,633	67,569	46,633
Ic(n)	(in^4)	98,158	–	98,158
Ic(3n)	(in^4)	73,568	–	73,568
Ic(cr)	(in^4)	–	75,214	–
Ss	(in^3)	1,651	2,242	1,651
Sc(n)	(in^3)	2,089	–	2,089
Sc(3n)	(in^3)	1,932	–	1,932
Sc(cr)	(in^3)	–	2,671	–
Sxc	(in^3)	1,995	2,548	1,991
DC1	(k/')	1.14	1.23	1.14
MDC1	('k)	1,001	2,143	1,048
DC2	(k/')	0.26	0.27	0.28
MDC2	('k)	197	433	201
DW	(k/')	0.42	0.42	0.43
MDW	('k)	316	640	331
M_{LL+IM}	('k)	1,636	1,884	1,632
fℓ (Strength I)	(ksi)	13.7	5.1	5.4
Mu + 1/3 fℓ Sxc	('k)	5,596	7,834	5,211
Φf Mn	('k)	–	–	–
fs DC1	(ksi)	7.3	11.5	7.6
fs DC2	(ksi)	1.2	1.9	1.3
fs DW	(ksi)	2.0	2.9	2.1
fs ($_{LL}$+IM)	(ksi)	9.4	8.5	9.4
fℓ (Service II)	(ksi)	10.2	3.8	3.9
fs+ $^{f\ell}/_2$ (Service II)	(ksi)	27.8	29.2	25.1
0.95Rh Fyf	(ksi)	47.5	47.5	47.5
fs + $^{f\ell}/_3$ (Total)(Strength I)	(ksi)	34.6	37.6	32.4
Φf Fn	(ksi)	50.0	50.0	50.0
Vf	(k)	24.1	24.0	23.0

GIRDER 14 REACTION TABLE				
		Pier 3C-S	Pier 4C	S. Abut. C
RDC1	(k)	50.4	180.0	52.0
RDC2	(k)	6.5	31.9	6.9
RDW	(k)	16.3	54.8	16.7
R_{LL+IM}	(k)	75.4	121.5	75.9
Rtotal	(k)	148.5	388.3	151.4

Is, Ss: Non-composite moment of inertia and section modulus of the steel section used for computing fs(Total-Strength I, and Service II) due to non-composite dead loads ($in.^4$ and $in.^3$).

Ic(n), Sc(n): Composite moment of inertia and section modulus of the steel and deck based upon the modular ratio, "n", used for computing fs(Total-Strength I, and Service II) in uncracked sections due to short term composite live loads ($in.^4$ and $in.^3$).

Ic(3n), Sc(3n): Composite moment of inertia and section modulus of the steel and deck based upon 3 times the modular ratio, "3n", used for computing fs(Total-Strength I, and Service II) in uncracked sections due to long-term composite (superimposed) dead loads ($in.^4$ and $in.^3$).

Ic(cr), Sc(cr): Composite moment of inertia and section modulus of the steel and longitudinal deck reinforcement, used for computing fs(Total-Strength I and Service II) in cracked sections, due to both short-term composite live loads and long-term composite (superimposed) dead loads ($in.^4$ and $in.^3$).

Sxc: Section modulus about the major axis of section to the controlling flange, tension or compression, taken as yield moment with respect to the controlling flange over the yield strength of the controlling flange ($in.^3$).

DC1: Un-factored non-composite dead load (kips/ft.).

MDC1: Un-factored moment due to non-composite dead load (kip-ft.).

DC2: Un-factored long-term composite (superimposed excluding future wearing surface) dead load (kips/ft.).

MDC2: Un-factored moment due to long-term composite (superimposed excluding future wearing surface) dead load (kip-ft.).

DW: Un-factored long-term composite (superimposed future wearing surface only) dead load (kips/ft.).

MDW: Un-factored moment due to long-term composite (superimposed future wearing surface only) dead load (kip-ft.).

M_{LL+IM}: Un-factored live load moment plus dynamic load allowance (impact)(kip-ft.).

Mu (Strength I): Factored design moment (kip-ft.).
1.25 (MDC1+ MDC2) + 1.5 MDW + 1.75 M_{LL+IM}

fℓ: Factored calculated normal stress at edge of flange for controlling flange plate due to lateral bending, Strength I or Service II as applicable (kip-ft.).

Øf Mn: Compact composite positive moment capacity computed according to Article 6.10.7.1 or non-slender negative moment capacity according to Article A6.1.1 or A6.1.2 (kip-ft.).

fs DC1: Un-factored stress at edge of flange for controlling steel flange due to vertical non-composite dead loads as calculated below (ksi).
MDC1 / Snc

fs DC2: Un-factored stress at edge of flange for controlling steel flange due to vertical composite dead loads as calculated below (ksi).
MDC2 / Sc(3n) or MDC2 / Sc(cr) as applicable.

fs DW: Un-factored stress at edge of flange for controlling steel flange due to vertical composite future wearing surface loads as calculated below (ksi).
MDW / Sc(3n) or MDW / Sc(cr) as applicable.

fs ($_{LL}$+IM): Un-factored stress at edge of flange for controlling steel flange due to vertical composite live plus impact loads as calculated below (ksi).
M_{LL+IM} / Sc(n) or M_{LL+IM} / Sc(cr) as applicable.

fs + $^{f\ell}/_2$ (Service II): Sum of stresses as computed below (ksi).
fsDC1 + fsDC2 + fsDW + 1.3 fs($_{LL+IM}$) + $^{f\ell}/_2$

0.95RhFyf: Composite stress capacity for Service II loading according to Article 6.10.4.2 (ksi).

fs + $^{f\ell}/_3$ (Total)(Strength I): Sum of stresses as computed below on non-compact section (ksi).
1.25 (fsDC1 + fsDC2) + 1.5 fsDW + 1.75 fs($_{LL+IM}$) + $^{f\ell}/_3$

Øf Fn: Non-Compact composite positive or negative stress capacity for Strength I loading according to Article 6.10.7 or 6.10.8 (ksi).

Vf: Maximum factored shear range in span computed according to Article 6.10.10.

Note:
M_{LL} and R_{LL} include the effects of centrifugal force and superelevation.

GIRDER 15 MOMENT TABLE				
		0.4 Sp. 4C	Pier 4C	0.6 Sp. 5C
Is	(in^4)	40,908	55,529	40,908
Ic(n)	(in^4)	89,683	–	89,683
Ic(3n)	(in^4)	67,067	–	67,067
Ic(cr)	(in^4)	–	62,543	–
Ss	(in^3)	1,448	1,931	1,448
Sc(n)	(in^3)	1,875	–	1,875
Sc(3n)	(in^3)	1,729	–	1,729
Sc(cr)	(in^3)	–	2,020	–
Sxc	(in^3)	1,796	1,997	1,798
DC1	(k/')	1.12	1.18	1.12
MDC1	('k)	760	1,676	737
DC2	(k/')	0.22	0.18	0.22
MDC2	('k)	168	284	164
DW	(k/')	0.34	0.34	0.32
MDW	('k)	255	525	250
M_{LL+IM}	('k)	1,297	1,427	1,249
fℓ (Strength I)	(ksi)	17.0	6.1	19.0
Mu + 1/3 fℓ Sxc	('k)	4,663	6,072	4,633
Φf Mn	('k)	–	–	–
fs DC1	(ksi)	6.3	10.4	6.1
fs DC2	(ksi)	1.2	1.7	1.1
fs DW	(ksi)	1.8	3.1	1.7
fs ($_{LL}$+IM)	(ksi)	8.3	8.5	8.0
fℓ (Service II)	(ksi)	12.9	4.6	14.3
fs+ $f_\ell/2$ (Service II)	(ksi)	26.5	28.5	26.5
0.95Rh Fyf	(ksi)	47.5	47.5	47.5
fs + $f_\ell/3$ (Total)(Strength I)	(ksi)	32.2	36.7	32.0
Φf Fn	(ksi)	50.0	48.7	50.0
Vf	(k)	20.2	21.1	20.0

GIRDER 15 REACTION TABLE				
		Pier 3C-S	Pier 4C	S. Abut. C.
RDC1	(k)	42.7	162.9	42.1
RDC2	(k)	5.0	26.6	4.8
RDW	(k)	14.3	51.3	14.1
R_{LL+IM}	(k)	69.0	113.4	66.9
Rtotal	(k)	131.0	354.1	127.8

GIRDER 16 MOMENT TABLE				
		0.4 Sp. 4C	Pier 4C	0.6 Sp. 5C
Is	(in^4)	40,908	55,529	40,908
Ic(n)	(in^4)	88,072	–	88,072
Ic(3n)	(in^4)	65,712	–	65,712
Ic(cr)	(in^4)	–	62,062	–
Ss	(in^3)	1,448	1,931	1,448
Sc(n)	(in^3)	1,867	–	1,867
Sc(3n)	(in^3)	1,718	–	1,718
Sc(cr)	(in^3)	–	2,015	–
Sxc	(in^3)	1,802	1,996	1,810
DC1	(k/')	1.14	1.20	1.14
MDC1	('k)	616	1,433	530
DC2	(k/')	0.27	0.22	0.24
MDC2	('k)	201	356	182
DW	(k/')	0.27	0.28	0.24
MDW	('k)	204	433	183
M_{LL+IM}	('k)	1,351	1,472	1,285
fℓ (Strength I)	(ksi)	16.3	8.3	18.0
Mu + 1/3 fℓ Sxc	('k)	4,510	5,922	4,318
Φf Mn	('k)	–	–	–
fs DC1	(ksi)	5.1	8.9	4.4
fs DC2	(ksi)	1.4	2.1	1.3
fs DW	(ksi)	1.4	2.6	1.3
fs ($_{LL}$+IM)	(ksi)	8.7	8.8	8.3
fℓ (Service II)	(ksi)	12.3	6.2	13.5
fs+ $f_\ell/2$ (Service II)	(ksi)	25.4	28.1	24.4
0.95Rh Fyf	(ksi)	47.5	47.5	47.5
fs + $f_\ell/3$ (Total)(Strength I)	(ksi)	30.9	35.8	29.4
Φf Fn	(ksi)	50.0	48.9	50.0
Vf	(k)	27.3	29.3	26.6

GIRDER 16 REACTION TABLE				
		Pier 3C-S	Pier 4C	S. Abut. C.
RDC1	(k)	35.6	155.5	30.9
RDC2	(k)	13.9	44.0	12.6
RDW	(k)	10.8	46.4	9.5
R_{LL+IM}	(k)	77.1	125.8	75.2
Rtotal	(k)	137.5	371.7	128.1

Is, Ss: Non-composite moment of inertia and section modulus of the steel section used for computing fs(Total-Strength I, and Service II) due to non-composite dead loads ($in.^4$ and $in.^3$).

Ic(n), Sc(n): Composite moment of inertia and section modulus of the steel and deck based upon the modular ratio, "n", used for computing fs(Total-Strength I, and Service II) in uncracked sections due to short term composite live loads ($in.^4$ and $in.^3$).

Ic(3n), Sc(3n): Composite moment of inertia and section modulus of the steel and deck based upon 3 times the modular ratio, "3n", used for computing fs(Total-Strength I, and Service II) in uncracked sections due to long-term composite (superimposed) dead loads ($in.^4$ and $in.^3$).

Ic(cr), Sc(cr): Composite moment of inertia and section modulus of the steel and longitudinal deck reinforcement, used for computing fs(Total-Strength I and Service II) in cracked sections, due to both short-term composite live loads and long-term composite (superimposed) dead loads ($in.^4$ and $in.^3$).

Sxc: Section modulus about the major axis of section to the controlling flange, tension or compression, taken as yield moment with respect to the controlling flange over the yield strength of the controlling flange ($in.^3$).

DC1: Un-factored non-composite dead load (kips/ft.).

MDC1: Un-factored moment due to non-composite dead load (kip-ft.).

DC2: Un-factored long-term composite (superimposed excluding future wearing surface) dead load (kips/ft.).

MDC2: Un-factored moment due to long-term composite (superimposed excluding future wearing surface) dead load (kip-ft.).

DW: Un-factored long-term composite (superimposed future wearing surface only) dead load (kips/ft.).

MDW: Un-factored moment due to long-term composite (superimposed future wearing surface only) dead load (kip-ft.).

M_{LL+IM}: Un-factored live load moment plus dynamic load allowance (impact)(kip-ft.).

Mu (Strength I): Factored design moment (kip-ft.).
1.25 (MDC1+ MDC2) + 1.5 MDW + 1.75 M_{LL+IM}

fℓ: Factored calculated normal stress at edge of flange for controlling flange plate due to lateral bending, Strength I or Service II as applicable (kip-ft.).

Øf Mn: Compact composite positive moment capacity computed according to Article 6.10.7.1 or non-slender negative moment capacity according to Article A6.1.1 or A6.1.2 (kip-ft.).

fs DC1: Un-factored stress at edge of flange for controlling steel flange due to vertical non-composite dead loads as calculated below (ksi).
MDC1 / Snc

fs DC2: Un-factored stress at edge of flange for controlling steel flange due to vertical composite dead loads as calculated below (ksi).
MDC2 / Sc(3n) or MDC2 / Sc(cr) as applicable.

fs DW: Un-factored stress at edge of flange for controlling steel flange due to vertical composite future wearing surface loads as calculated below (ksi).
MDW / Sc(3n) or MDW / Sc(cr) as applicable.

fs ($_{LL}$+IM): Un-factored stress at edge of flange for controlling steel flange due to vertical composite live plus impact loads as calculated below (ksi).
M_{LL+IM} / Sc(n) or M_{LL+IM} / Sc(cr) as applicable.

fs + $f_\ell/2$ (Service II): Sum of stresses as computed below (ksi).
fsDC1 + fsDC2 + fsDW + 1.3 fs($_{LL+IM}$) + $f_\ell/2$

0.95RhFyf: Composite stress capacity for Service II loading according to Article 6.10.4.2 (ksi).

fs + $f_\ell/3$ (Total)(Strength I): Sum of stresses as computed below on non-compact section (ksi).
1.25 (fsDC1 + fsDC2) + 1.5 fsDW + 1.75 fs($_{LL+IM}$) + $f_\ell/3$

Øf Fn: Non-Compact composite positive or negative stress capacity for Strength I loading according to Article 6.10.7 or 6.10.8 (ksi).

Vf: Maximum factored shear range in span computed according to Article 6.10.10.

Note:
M_{LL} and R_{LL} include the effects of centrifugal force and superelevation.

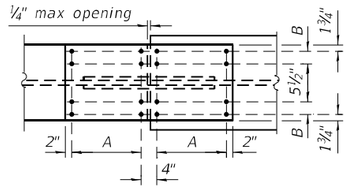

TOP FLANGE SPLICE

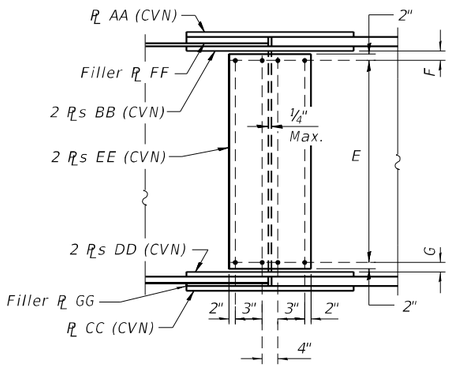

WEB SPLICE

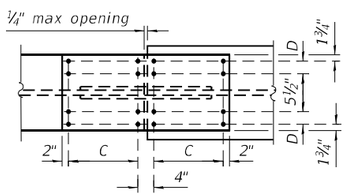

BOTTOM FLANGE SPLICE

LT BRIDGE SPLICE PLATE SIZES

UNIT	GIRDER	SPLICE	AA	BB	CC	DD	EE	FF	GG
1	1,2	1-1	3/4"x2'-0"x3'-2"	3/4"x11"x3'-2"	3/4"x2'-0"x3'-2"	3/4"x11"x3'-2"	3/8"x1'-2"x6'-1 3/8"	1/2"x2'-0"x1'-6 7/8"	1/2"x2'-0"x1'-6 7/8"
		1-2	3/4"x2'-0"x3'-2"	3/4"x11"x3'-2"	3/4"x2'-3"x3'-8"	3/4"x1'-0 1/2"x3'-8"	3/8"x1'-2"x6'-1 3/8"	1/2"x2'-0"x1'-6 7/8"	1/2"x2'-3"x1'-9 7/8"
		1-3	3/4"x2'-0"x3'-2"	3/4"x11"x3'-2"	3/4"x2'-3"x3'-8"	3/4"x1'-0 1/2"x3'-8"	3/8"x1'-2"x6'-1 3/8"	1/2"x2'-0"x1'-6 7/8"	1/2"x2'-3"x1'-9 7/8"
		1-4	3/4"x1'-5"x4'-8"	7/8"x7 1/2"x4'-8"	3/4"x1'-5"x4'-8"	7/8"x7 1/2"x4'-8"	3/8"x1'-2"x6'-1 3/8"	1/2"x1'-5"x2'-3 7/8"	1/2"x1'-5"x2'-3 7/8"
		1-5	3/4"x1'-5"x3'-2"	7/8"x7 1/2"x3'-2"	3/4"x1'-5"x3'-2"	7/8"x7 1/2"x3'-2"	3/8"x1'-2"x6'-1 3/8"	1/2"x1'-5"x1'-6 7/8"	1/2"x1'-5"x1'-6 7/8"
		1-6	5/8"x1'-5"x2'-8"	3/4"x7 1/2"x2'-8"	5/8"x1'-5"x2'-8"	3/4"x7 1/2"x2'-8"	3/8"x1'-2"x6'-1 3/8"	3/4"x1'-5"x1'-3 7/8"	3/4"x1'-5"x1'-3 7/8"
	3,4	1-1	5/8"x1'-6"x3'-2"	3/4"x8"x3'-2"	5/8"x1'-6"x3'-2"	3/4"x8"x3'-2"	3/8"x1'-2"x6'-1 3/8"	3/4"x1'-6"x1'-6 7/8"	3/4"x1'-6"x1'-6 7/8"
		1-2	1"x1'-6"x3'-8"	1 1/8"x8"x3'-8"	1"x1'-6"x3'-8"	1 1/8"x8"x3'-8"	3/8"x1'-2"x6'-1 3/8"	--	--
		1-3 *	1"x1'-6"x3'-8"	1 1/8"x8"x3'-8"	1"x1'-6"x4'-8"	1 1/8"x8"x4'-8"	3/8"x1'-2"x6'-1 3/8"	--	--
		1-4	5/8"x1'-5"x3'-8"	3/4"x7 1/2"x3'-8"	5/8"x1'-5"x3'-8"	3/4"x7 1/2"x3'-8"	3/8"x1'-2"x6'-1 3/8"	3/4"x1'-5"x1'-9 7/8"	3/4"x1'-5"x1'-9 7/8"
		1-5	5/8"x1'-5"x3'-2"	3/4"x7 1/2"x3'-2"	5/8"x1'-5"x3'-2"	3/4"x7 1/2"x3'-2"	3/8"x1'-2"x6'-1 3/8"	3/4"x1'-5"x1'-6 7/8"	3/4"x1'-5"x1'-6 7/8"
		1-6	3/4"x1'-5"x3'-2"	7/8"x7 1/2"x3'-2"	1"x1'-9"x3'-2"	1 1/8"x9 1/2"x3'-2"	3/8"x1'-2"x6'-1 3/8"	1/2"x1'-5"x1'-6 7/8"	--
	5	1-4	5/8"x1'-5"x3'-8"	3/4"x7 1/2"x3'-8"	5/8"x1'-5"x3'-8"	3/4"x7 1/2"x3'-8"	3/8"x1'-2"x6'-1 3/8"	3/4"x1'-5"x1'-9 7/8"	3/4"x1'-5"x1'-9 7/8"
		1-5 *	5/8"x1'-5"x2'-8"	3/4"x7 1/2"x2'-8"	5/8"x1'-5"x2'-8"	3/4"x7 1/2"x2'-8"	3/8"x1'-2"x6'-1 3/8"	3/4"x1'-5"x1'-3 7/8"	3/4"x1'-5"x1'-3 7/8"
		1-6	5/8"x1'-5"x2'-8"	3/4"x7 1/2"x2'-8"	5/8"x1'-5"x2'-8"	3/4"x7 1/2"x2'-8"	3/8"x1'-2"x6'-1 3/8"	3/4"x1'-5"x1'-3 7/8"	3/4"x1'-5"x1'-3 7/8"
	6,7,8	1-1	5/8"x1'-6"x3'-8"	3/4"x8"x3'-8"	5/8"x1'-6"x3'-8"	3/4"x8"x3'-8"	3/8"x1'-2"x6'-1 3/8"	3/4"x1'-6"x1'-9 7/8"	3/4"x1'-6"x1'-9 7/8"
		1-2	3/4"x1'-6"x3'-8"	7/8"x8"x3'-8"	3/4"x1'-9"x2'-8"	7/8"x9 1/2"x2'-8"	3/8"x1'-2"x6'-1 3/8"	1/2"x1'-6"x1'-9 7/8"	1/2"x1'-9"x1'-3 7/8"
		1-3	3/4"x1'-6"x3'-8"	7/8"x8"x3'-8"	3/4"x1'-9"x3'-2"	7/8"x9 1/2"x3'-2"	3/8"x1'-2"x6'-1 3/8"	1/2"x1'-6"x1'-9 7/8"	1/2"x1'-9"x1'-6 7/8"
		1-4	5/8"x1'-5"x3'-8"	3/4"x7 1/2"x3'-8"	5/8"x1'-5"x3'-8"	3/4"x7 1/2"x3'-8"	3/8"x1'-2"x6'-1 3/8"	3/4"x1'-5"x1'-9 7/8"	3/4"x1'-5"x1'-9 7/8"
		1-5	5/8"x1'-5"x2'-8"	3/4"x7 1/2"x2'-8"	5/8"x1'-5"x2'-8"	3/4"x7 1/2"x2'-8"	3/8"x1'-2"x6'-1 3/8"	3/4"x1'-5"x1'-3 7/8"	3/4"x1'-5"x1'-3 7/8"
		1-6	5/8"x1'-5"x2'-8"	3/4"x7 1/2"x2'-8"	5/8"x1'-5"x2'-8"	3/4"x7 1/2"x2'-8"	3/8"x1'-2"x6'-1 3/8"	3/4"x1'-5"x1'-3 7/8"	3/4"x1'-5"x1'-3 7/8"

LT BRIDGE SPLICE BOLT SPACING

UNIT	GIRDER	SPLICE	A	B	C	D	E	F	G
1	1,2	1-1	5 Spa. @ 3"=1'-3"	2 Spa. @ 3 3/4"=7 1/2"	5 Spa. @ 3"=1'-3"	2 Spa. @ 3 3/4"=7 1/2"	15 Spa. @ 4 5/8"=5'-9 3/8"	3 9/16"	3 9/16"
		1-2	5 Spa. @ 3"=1'-3"	2 Spa. @ 3 3/4"=7 1/2"	6 Spa. @ 3"=1'-6"	2 Spa. @ 4 1/2"=9"	15 Spa. @ 4 5/8"=5'-9 3/8"	3 9/16"	3 9/16"
		1-3	5 Spa. @ 3"=1'-3"	2 Spa. @ 3 3/4"=7 1/2"	6 Spa. @ 3"=1'-6"	2 Spa. @ 4 1/2"=9"	15 Spa. @ 4 5/8"=5'-9 3/8"	3 9/16"	3 9/16"
		1-4	8 Spa. @ 3"=2'-0"	1 Spa. @ 4"=4"	8 Spa. @ 3"=2'-0"	1 Spa. @ 4"=4"	15 Spa. @ 4 5/8"=5'-9 3/8"	3 7/16"	3 7/16"
		1-5	5 Spa. @ 3"=1'-3"	1 Spa. @ 4"=4"	5 Spa. @ 3"=1'-3"	1 Spa. @ 4"=4"	15 Spa. @ 4 5/8"=5'-9 3/8"	3 7/16"	3 7/16"
		1-6	4 Spa. @ 3"=1'-0"	1 Spa. @ 4"=4"	4 Spa. @ 3"=1'-0"	1 Spa. @ 4"=4"	15 Spa. @ 4 5/8"=5'-9 3/8"	3 9/16"	3 9/16"
	3,4	1-1	5 Spa. @ 3"=1'-3"	1 Spa. @ 4 1/2"=4 1/2"	5 Spa. @ 3"=1'-3"	1 Spa. @ 4 1/2"=4 1/2"	15 Spa. @ 4 5/8"=5'-9 3/8"	3 9/16"	3 9/16"
		1-2	6 Spa. @ 3"=1'-6"	1 Spa. @ 4 1/2"=4 1/2"	6 Spa. @ 3"=1'-6"	1 Spa. @ 4 1/2"=4 1/2"	15 Spa. @ 4 5/8"=5'-9 3/8"	3 3/16"	3 3/16"
		1-3	6 Spa. @ 3"=1'-6"	1 Spa. @ 4 1/2"=4 1/2"	8 Spa. @ 3"=2'-0"	1 Spa. @ 4 1/2"=4 1/2"	15 Spa. @ 4 5/8"=5'-9 3/8"	3 3/16"	3 3/16"
		1-4	6 Spa. @ 3"=1'-6"	1 Spa. @ 4"=4"	6 Spa. @ 3"=1'-6"	1 Spa. @ 4"=4"	15 Spa. @ 4 5/8"=5'-9 3/8"	3 9/16"	3 9/16"
		1-5	5 Spa. @ 3"=1'-3"	1 Spa. @ 4"=4"	5 Spa. @ 3"=1'-3"	1 Spa. @ 4"=4"	15 Spa. @ 4 5/8"=5'-9 3/8"	3 9/16"	3 9/16"
		1-6	5 Spa. @ 3"=1'-3"	1 Spa. @ 4"=4"	5 Spa. @ 3"=1'-3"	2 Spa. @ 3"=6"	15 Spa. @ 4 5/8"=5'-9 3/8"	3 7/16"	3 3/16"
	5	1-4	6 Spa. @ 3"=1'-6"	1 Spa. @ 4"=4"	6 Spa. @ 3"=1'-6"	1 Spa. @ 4"=4"	15 Spa. @ 4 5/8"=5'-9 3/8"	3 9/16"	3 9/16"
		1-5	4 Spa. @ 3"=1'-0"	1 Spa. @ 4"=4"	4 Spa. @ 3"=1'-0"	1 Spa. @ 4"=4"	15 Spa. @ 4 5/8"=5'-9 3/8"	3 9/16"	3 9/16"
		1-6	4 Spa. @ 3"=1'-0"	1 Spa. @ 4"=4"	4 Spa. @ 3"=1'-0"	1 Spa. @ 4"=4"	15 Spa. @ 4 5/8"=5'-9 3/8"	3 9/16"	3 9/16"
	6,7,8	1-1	6 Spa. @ 3"=1'-6"	1 Spa. @ 4 1/2"=4 1/2"	6 Spa. @ 3"=1'-6"	1 Spa. @ 4 1/2"=4 1/2"	15 Spa. @ 4 5/8"=5'-9 3/8"	3 9/16"	3 9/16"
		1-2	6 Spa. @ 3"=1'-6"	1 Spa. @ 4 1/2"=4 1/2"	4 Spa. @ 3"=1'-0"	2 Spa. @ 3"=6"	15 Spa. @ 4 5/8"=5'-9 3/8"	3 7/16"	3 7/16"
		1-3	6 Spa. @ 3"=1'-6"	1 Spa. @ 4 1/2"=4 1/2"	5 Spa. @ 3"=1'-3"	2 Spa. @ 3"=6"	15 Spa. @ 4 5/8"=5'-9 3/8"	3 7/16"	3 7/16"
		1-4	6 Spa. @ 3"=1'-6"	1 Spa. @ 4"=4"	6 Spa. @ 3"=1'-6"	1 Spa. @ 4"=4"	15 Spa. @ 4 5/8"=5'-9 3/8"	3 9/16"	3 9/16"
		1-5	4 Spa. @ 3"=1'-0"	1 Spa. @ 4"=4"	4 Spa. @ 3"=1'-0"	1 Spa. @ 4"=4"	15 Spa. @ 4 5/8"=5'-9 3/8"	3 9/16"	3 9/16"
		1-6	4 Spa. @ 3"=1'-0"	1 Spa. @ 4"=4"	4 Spa. @ 3"=1'-0"	1 Spa. @ 4"=4"	15 Spa. @ 4 5/8"=5'-9 3/8"	3 9/16"	3 9/16"

*See sheet S-136 for Kinked Flange Splice Detail

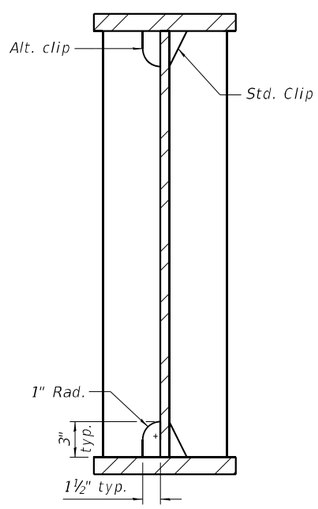

CLIP DETAILS

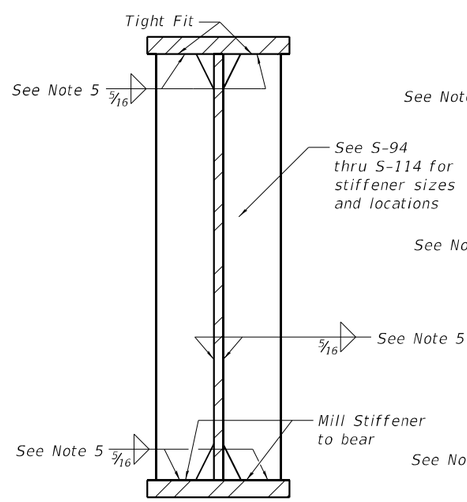

SECTION AT JACKING AND BEARING STIFFENERS

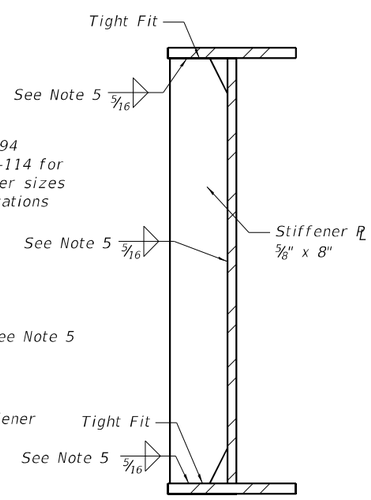

SECTION AT INTERMEDIATE STIFFENERS

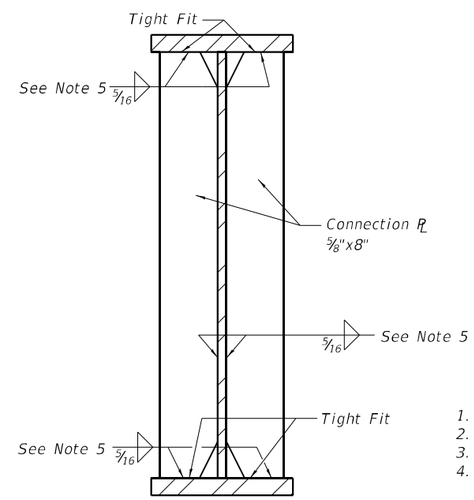

SECTION AT CROSS FRAME CONNECTION PLATES

NOTES:

1. See sheets S-94 thru S-102 for girder framing plan.
2. All structural steel shall be AASHTO M270 Grade 50.
3. "CVN" denotes Charpy-V-Notch impact energy requirements, zone 2.
4. Fasteners shall be ASTM F3125 Grade A325 Type 1, mechanically galvanized bolts. Bolts ⅞"Ø, holes 15/16"Ø.
5. Terminate ¼" (±⅛") from the end of the plate intersects.
6. All faying surfaces of bolted connections must meet the requirements for a Class C surface as defined by AASHTO.

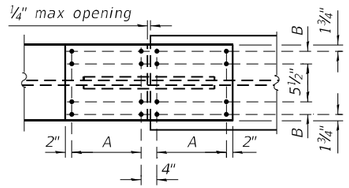

TOP FLANGE SPLICE

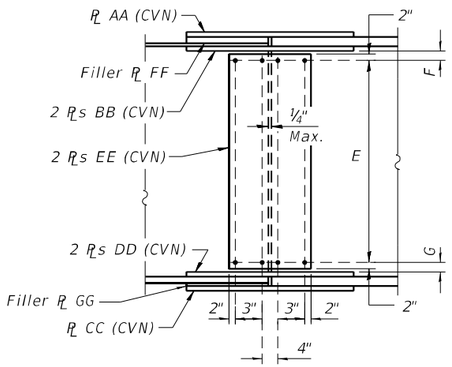

WEB SPLICE

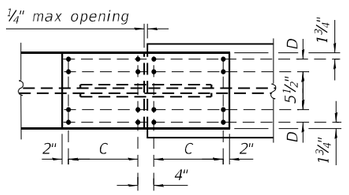

BOTTOM FLANGE SPLICE

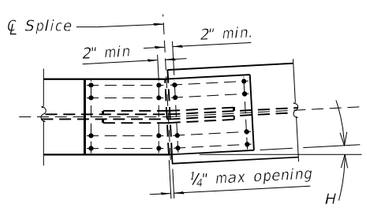

KINKED FLANGE SPLICE

All dimensions shown for non-kinked field splice plate shall apply to kinked field splice plate. Fabricator shall make any necessary adjustment to splice plate dimensions, bolt spacings, etc. to account for bent plates.

RT BRIDGE SPLICE PLATE SIZES

UNIT	GIRDER	SPLICE	AA	BB	CC	DD	EE	FF	GG
1	9,10,11	1-1	5/8"x1'-6"x3'-8"	3/4"x8"x3'-8"	5/8"x1'-6"x3'-8"	3/4"x8"x3'-8"	3/8"x1'-2"x6'-1 3/8"	3/4"x1'-6"x1'-9 7/8"	3/4"x1'-6"x1'-9 7/8"
		1-2	3/4"x1'-6"x3'-8"	7/8"x8"x3'-8"	3/4"x1'-9"x2'-8"	7/8"x9 1/2"x2'-8"	3/8"x1'-2"x6'-1 3/8"	1/2"x1'-6"x1'-9 7/8"	1/2"x1'-9"x1'-3 7/8"
		1-3	3/4"x1'-6"x3'-8"	7/8"x8"x3'-8"	3/4"x1'-9"x3'-2"	7/8"x9 1/2"x3'-2"	3/8"x1'-2"x6'-1 3/8"	1/2"x1'-6"x1'-9 7/8"	1/2"x1'-9"x1'-6 7/8"
		1-4	5/8"x1'-5"x3'-8"	3/4"x7 1/2"x3'-8"	5/8"x1'-5"x3'-8"	3/4"x7 1/2"x3'-8"	3/8"x1'-2"x6'-1 3/8"	3/4"x1'-5"x1'-9 7/8"	3/4"x1'-5"x1'-9 7/8"
		1-5	5/8"x1'-5"x2'-8"	3/4"x7 1/2"x2'-8"	5/8"x1'-5"x2'-8"	3/4"x7 1/2"x2'-8"	3/8"x1'-2"x6'-1 3/8"	3/4"x1'-5"x1'-3 7/8"	3/4"x1'-5"x1'-3 7/8"
		1-6	5/8"x1'-5"x2'-8"	3/4"x7 1/2"x2'-8"	5/8"x1'-5"x2'-8"	3/4"x7 1/2"x2'-8"	3/8"x1'-2"x6'-1 3/8"	3/4"x1'-5"x1'-3 7/8"	3/4"x1'-5"x1'-3 7/8"
	12	1-1	5/8"x1'-6"x3'-8"	3/4"x8"x3'-8"	5/8"x1'-6"x3'-8"	3/4"x8"x3'-8"	3/8"x1'-2"x6'-1 3/8"	3/4"x1'-6"x1'-9 7/8"	3/4"x1'-6"x1'-9 7/8"
		1-2	3/4"x1'-6"x3'-8"	7/8"x8"x3'-8"	3/4"x1'-9"x2'-8"	7/8"x9 1/2"x2'-8"	3/8"x1'-2"x6'-1 3/8"	1/2"x1'-6"x1'-9 7/8"	1/2"x1'-9"x1'-3 7/8"
		1-3 *	3/4"x1'-6"x3'-8"	7/8"x8"x3'-8"	3/4"x1'-9"x2'-8"	7/8"x9 1/2"x2'-8"	3/8"x1'-2"x6'-1 3/8"	1/2"x1'-6"x1'-9 7/8"	1/2"x1'-9"x1'-3 7/8"
		1-4	5/8"x1'-5"x3'-2"	3/4"x7 1/2"x3'-2"	5/8"x1'-5"x3'-2"	3/4"x7 1/2"x3'-2"	3/8"x1'-2"x6'-1 3/8"	3/4"x1'-5"x1'-6 7/8"	3/4"x1'-5"x1'-6 7/8"
		1-5	5/8"x1'-5"x2'-8"	3/4"x7 1/2"x2'-8"	5/8"x1'-5"x2'-8"	3/4"x7 1/2"x2'-8"	3/8"x1'-2"x6'-1 3/8"	3/4"x1'-5"x1'-3 7/8"	3/4"x1'-5"x1'-3 7/8"
		1-6	5/8"x1'-5"x2'-8"	3/4"x7 1/2"x2'-8"	5/8"x1'-5"x2'-8"	3/4"x7 1/2"x2'-8"	3/8"x1'-2"x6'-1 3/8"	3/4"x1'-5"x1'-3 7/8"	3/4"x1'-5"x1'-3 7/8"
	13	1-2	7/8"x1'-9"x2'-8"	7/8"x9 1/2"x2'-8"	7/8"x1'-9"x2'-8"	7/8"x9 1/2"x2'-8"	3/8"x1'-2"x6'-1 3/8"	1/2"x1'-9"x1'-3 7/8"	1/2"x1'-9"x1'-3 7/8"
		1-3 *	7/8"x1'-9"x3'-2"	7/8"x9 1/2"x3'-2"	7/8"x1'-9"x3'-2"	7/8"x9 1/2"x3'-2"	3/8"x1'-2"x6'-1 3/8"	1 1/4"x1'-9"x1'-6 7/8"	1 1/4"x1'-9"x1'-6 7/8"
		1-4	1 1/8"x1'-9"x5'-2"	1 1/8"x9 1/2"x5'-2"	1 1/2"x1'-10"x5'-2"	1 1/2"x10"x5'-2"	3/8"x1'-2"x6'-1 3/8"	3/4"x1'-9"x2'-6 7/8"	--
		1-5	1 1/8"x1'-9"x5'-2"	1 1/8"x9 1/2"x5'-2"	1 1/2"x1'-10"x6'-2"	1 1/2"x10"x6'-2"	3/8"x1'-2"x6'-1 3/8"	--	--
	14	1-1	5/8"x1'-9"x2'-8"	5/8"x9 1/2"x2'-8"	5/8"x1'-9"x2'-8"	5/8"x9 1/2"x2'-8"	3/8"x1'-2"x6'-1 3/8"	3/4"x1'-9"x1'-3 7/8"	3/4"x1'-9"x1'-3 7/8"
		1-2	7/8"x1'-9"x2'-8"	7/8"x9 1/2"x2'-8"	7/8"x1'-9"x2'-8"	7/8"x9 1/2"x2'-8"	3/8"x1'-2"x6'-1 3/8"	1/2"x1'-9"x1'-3 7/8"	1/2"x1'-9"x1'-3 7/8"
		1-3	7/8"x1'-9"x3'-2"	7/8"x9 1/2"x3'-2"	7/8"x1'-9"x3'-2"	7/8"x9 1/2"x3'-2"	3/8"x1'-2"x6'-1 3/8"	1 1/4"x1'-9"x1'-6 7/8"	1 1/4"x1'-9"x1'-6 7/8"
		1-4	1 1/8"x1'-9"x4'-8"	1 1/8"x9 1/2"x4'-8"	1 1/8"x1'-9"x4'-8"	1 1/8"x9 1/2"x4'-8"	3/8"x1'-2"x6'-1 3/8"	3/4"x1'-9"x2'-3 7/8"	3/4"x1'-9"x2'-3 7/8"
		1-5	1 1/8"x1'-9"x3'-8"	1 1/8"x9 1/2"x3'-8"	1 1/8"x1'-9"x4'-2"	1 1/8"x9 1/2"x4'-2"	3/8"x1'-2"x6'-1 3/8"	--	--
	15,16	1-1	3/4"x2'-0"x3'-2"	3/4"x11"x3'-2"	3/4"x2'-0"x3'-2"	3/4"x11"x3'-2"	3/8"x1'-2"x6'-1 3/8"	1/2"x2'-0"x1'-6 7/8"	1/2"x2'-0"x1'-6 7/8"
		1-2	3/4"x2'-0"x3'-2"	3/4"x11"x3'-2"	3/4"x2'-3"x3'-8"	3/4"x1'-0 1/2"x3'-8"	3/8"x1'-2"x6'-1 3/8"	1/2"x2'-0"x1'-6 7/8"	1/2"x2'-3"x1'-9 7/8"
		1-3	3/4"x2'-0"x3'-2"	3/4"x11"x3'-2"	3/4"x2'-3"x3'-8"	3/4"x1'-0 1/2"x3'-8"	3/8"x1'-2"x6'-1 3/8"	1/2"x2'-0"x1'-6 7/8"	1/2"x2'-3"x1'-9 7/8"
		1-4	1 1/8"x1'-9"x3'-8"	1 1/8"x9 1/2"x3'-8"	1 1/8"x1'-9"x3'-8"	1 1/8"x9 1/2"x3'-8"	3/8"x1'-2"x6'-1 3/8"	--	--
		1-5	1 1/8"x1'-9"x3'-8"	1 1/8"x9 1/2"x3'-8"	1 1/8"x1'-9"x4'-2"	1 1/8"x9 1/2"x4'-2"	3/8"x1'-2"x6'-1 3/8"	--	--
2	13,14	2-1	7/8"x1'-9"x2'-8"	7/8"x9 1/2"x2'-8"	7/8"x1'-9"x2'-8"	7/8"x9 1/2"x2'-8"	3/8"x1'-2"x4'-2 1/4"	1/2"x1'-9"x1'-3 7/8"	1/2"x1'-9"x1'-3 7/8"
		2-2	7/8"x1'-9"x2'-8"	7/8"x9 1/2"x2'-8"	7/8"x1'-9"x2'-8"	7/8"x9 1/2"x2'-8"	3/8"x1'-2"x4'-2 1/4"	1/2"x1'-9"x1'-3 7/8"	1/2"x1'-9"x1'-3 7/8"
	15,16	2-1	3/4"x1'-6"x3'-8"	7/8"x8"x3'-8"	3/4"x1'-6"x3'-8"	7/8"x8"x3'-8"	3/8"x1'-2"x4'-2 1/4"	1/2"x1'-6"x1'-9 7/8"	1/2"x1'-6"x1'-9 7/8"
		2-2	3/4"x1'-6"x3'-8"	7/8"x8"x3'-8"	3/4"x1'-6"x3'-8"	7/8"x8"x3'-8"	3/8"x1'-2"x4'-2 1/4"	1/2"x1'-6"x1'-9 7/8"	1/2"x1'-6"x1'-9 7/8"

RT BRIDGE SPLICE BOLT SPACING

UNIT	GIRDER	SPLICE	A	B	C	D	E	F	G
1	9,10,11	1-1	6 Spa. @ 3"=1'-6"	1 Spa. @ 4 1/2"=4 1/2"	6 Spa. @ 3"=1'-6"	1 Spa. @ 4 1/2"=4 1/2"	15 Spa. @ 4 5/8"=5'-9 3/8"	3 9/16"	3 9/16"
		1-2	6 Spa. @ 3"=1'-6"	1 Spa. @ 4 1/2"=4 1/2"	4 Spa. @ 3"=1'-0"	2 Spa. @ 3"=6"	15 Spa. @ 4 5/8"=5'-9 3/8"	3 7/16"	3 7/16"
		1-3	6 Spa. @ 3"=1'-6"	1 Spa. @ 4 1/2"=4 1/2"	5 Spa. @ 3"=1'-3"	2 Spa. @ 3"=6"	15 Spa. @ 4 5/8"=5'-9 3/8"	3 7/16"	3 7/16"
		1-4	6 Spa. @ 3"=1'-6"	1 Spa. @ 4"=4"	6 Spa. @ 3"=1'-6"	1 Spa. @ 4"=4"	15 Spa. @ 4 5/8"=5'-9 3/8"	3 9/16"	3 9/16"
		1-5	4 Spa. @ 3"=1'-0"	1 Spa. @ 4"=4"	4 Spa. @ 3"=1'-0"	1 Spa. @ 4"=4"	15 Spa. @ 4 5/8"=5'-9 3/8"	3 9/16"	3 9/16"
		1-6	4 Spa. @ 3"=1'-0"	1 Spa. @ 4"=4"	4 Spa. @ 3"=1'-0"	1 Spa. @ 4"=4"	15 Spa. @ 4 5/8"=5'-9 3/8"	3 9/16"	3 9/16"
	12	1-1	6 Spa. @ 3"=1'-6"	1 Spa. @ 4 1/2"=4 1/2"	6 Spa. @ 3"=1'-6"	1 Spa. @ 4 1/2"=4 1/2"	15 Spa. @ 4 5/8"=5'-9 3/8"	3 9/16"	3 9/16"
		1-2	6 Spa. @ 3"=1'-6"	1 Spa. @ 4 1/2"=4 1/2"	4 Spa. @ 3"=1'-0"	2 Spa. @ 3"=6"	15 Spa. @ 4 5/8"=5'-9 3/8"	3 7/16"	3 7/16"
		1-3	6 Spa. @ 3"=1'-6"	1 Spa. @ 4 1/2"=4 1/2"	4 Spa. @ 3"=1'-0"	2 Spa. @ 3"=6"	15 Spa. @ 4 5/8"=5'-9 3/8"	3 7/16"	3 7/16"
		1-4	5 Spa. @ 3"=1'-3"	1 Spa. @ 4"=4"	5 Spa. @ 3"=1'-3"	1 Spa. @ 4"=4"	15 Spa. @ 4 5/8"=5'-9 3/8"	3 9/16"	3 9/16"
		1-5	4 Spa. @ 3"=1'-0"	1 Spa. @ 4"=4"	4 Spa. @ 3"=1'-0"	1 Spa. @ 4"=4"	15 Spa. @ 4 5/8"=5'-9 3/8"	3 9/16"	3 9/16"
		1-6	4 Spa. @ 3"=1'-0"	1 Spa. @ 4"=4"	4 Spa. @ 3"=1'-0"	1 Spa. @ 4"=4"	15 Spa. @ 4 5/8"=5'-9 3/8"	3 9/16"	3 9/16"
	13	1-2	4 Spa. @ 3"=1'-0"	2 Spa. @ 3"=6"	4 Spa. @ 3"=1'-0"	2 Spa. @ 3"=6"	15 Spa. @ 4 5/8"=5'-9 3/8"	3 7/16"	3 7/16"
		1-3	5 Spa. @ 3"=1'-3"	2 Spa. @ 3"=6"	5 Spa. @ 3"=1'-3"	2 Spa. @ 3"=6"	15 Spa. @ 4 5/8"=5'-9 3/8"	3 7/16"	3 7/16"
		1-4	9 Spa. @ 3"=2'-3"	2 Spa. @ 3"=6"	9 Spa. @ 3"=2'-3"	2 Spa. @ 3 1/4"=6 1/2"	15 Spa. @ 4 5/8"=5'-9 3/8"	3 3/16"	2 13/16"
		1-5	9 Spa. @ 3"=2'-3"	2 Spa. @ 3"=6"	11 Spa. @ 3"=2'-9"	2 Spa. @ 3 1/4"=6 1/2"	15 Spa. @ 4 5/8"=5'-9 3/8"	3 3/16"	2 13/16"
	14	1-1	4 Spa. @ 3"=1'-0"	2 Spa. @ 3"=6"	4 Spa. @ 3"=1'-0"	2 Spa. @ 3"=6"	15 Spa. @ 4 5/8"=5'-9 3/8"	3 11/16"	3 11/16"
		1-2	4 Spa. @ 3"=1'-0"	2 Spa. @ 3"=6"	4 Spa. @ 3"=1'-0"	2 Spa. @ 3"=6"	15 Spa. @ 4 5/8"=5'-9 3/8"	3 7/16"	3 7/16"
		1-3	5 Spa. @ 3"=1'-3"	2 Spa. @ 3"=6"	5 Spa. @ 3"=1'-3"	2 Spa. @ 3"=6"	15 Spa. @ 4 5/8"=5'-9 3/8"	3 7/16"	3 7/16"
		1-4	8 Spa. @ 3"=2'-0"	2 Spa. @ 3"=6"	8 Spa. @ 3"=2'-0"	2 Spa. @ 3"=6"	15 Spa. @ 4 5/8"=5'-9 3/8"	3 3/16"	3 3/16"
		1-5	6 Spa. @ 3"=1'-6"	2 Spa. @ 3"=6"	7 Spa. @ 3"=1'-9"	2 Spa. @ 3"=6"	15 Spa. @ 4 5/8"=5'-9 3/8"	3 3/16"	3 3/16"
	15,16	1-1	5 Spa. @ 3"=1'-3"	2 Spa. @ 3 3/4"=7 1/2"	5 Spa. @ 3"=1'-3"	2 Spa. @ 3 3/4"=7 1/2"	15 Spa. @ 4 5/8"=5'-9 3/8"	3 9/16"	3 9/16"
		1-2	5 Spa. @ 3"=1'-3"	2 Spa. @ 3 3/4"=7 1/2"	6 Spa. @ 3"=1'-6"	2 Spa. @ 4 1/2"=9"	15 Spa. @ 4 5/8"=5'-9 3/8"	3 9/16"	3 9/16"
		1-3	5 Spa. @ 3"=1'-3"	2 Spa. @ 3 3/4"=7 1/2"	6 Spa. @ 3"=1'-6"	2 Spa. @ 4 1/2"=9"	15 Spa. @ 4 5/8"=5'-9 3/8"	3 9/16"	3 9/16"
		1-4	6 Spa. @ 3"=1'-6"	2 Spa. @ 3"=6"	6 Spa. @ 3"=1'-6"	2 Spa. @ 3"=6"	15 Spa. @ 4 5/8"=5'-9 3/8"	3 3/16"	3 3/16"
		1-5	6 Spa. @ 3"=1'-6"	2 Spa. @ 3"=6"	7 Spa. @ 3"=1'-9"	2 Spa. @ 3"=6"	15 Spa. @ 4 5/8"=5'-9 3/8"	3 3/16"	3 3/16"
2	13,14	2-1	4 Spa. @ 3"=1'-0"	2 Spa. @ 3"=6"	4 Spa. @ 3"=1'-0"	2 Spa. @ 3"=6"	10 Spa. @ 4 5/8"=3'-10 1/4"	3"	3"
		2-2	4 Spa. @ 3"=1'-0"	2 Spa. @ 3"=6"	4 Spa. @ 3"=1'-0"	2 Spa. @ 3"=6"	10 Spa. @ 4 5/8"=3'-10 1/4"	3"	3"
	15,16	2-1	6 Spa. @ 3"=1'-6"	1 Spa. @ 4 1/2"=4 1/2"	6 Spa. @ 3"=1'-6"	1 Spa. @ 4 1/2"=4 1/2"	10 Spa. @ 4 5/8"=3'-10 1/4"	3"	3"
		2-2	6 Spa. @ 3"=1'-6"	1 Spa. @ 4 1/2"=4 1/2"	6 Spa. @ 3"=1'-6"	1 Spa. @ 4 1/2"=4 1/2"	10 Spa. @ 4 5/8"=3'-10 1/4"	3"	3"

*See Kinked Flange Splice Detail

KINKED SPLICE BEND ANGLE

UNIT	GIRDER	SPLICE	H
1	4	1-3	00°48'11"
	5	1-5	00°57'49"
	12	1-3	-00°27'55"
	13	1-3	-01°05'31"

NOTES:

1. See sheet S-135 for typical notes.

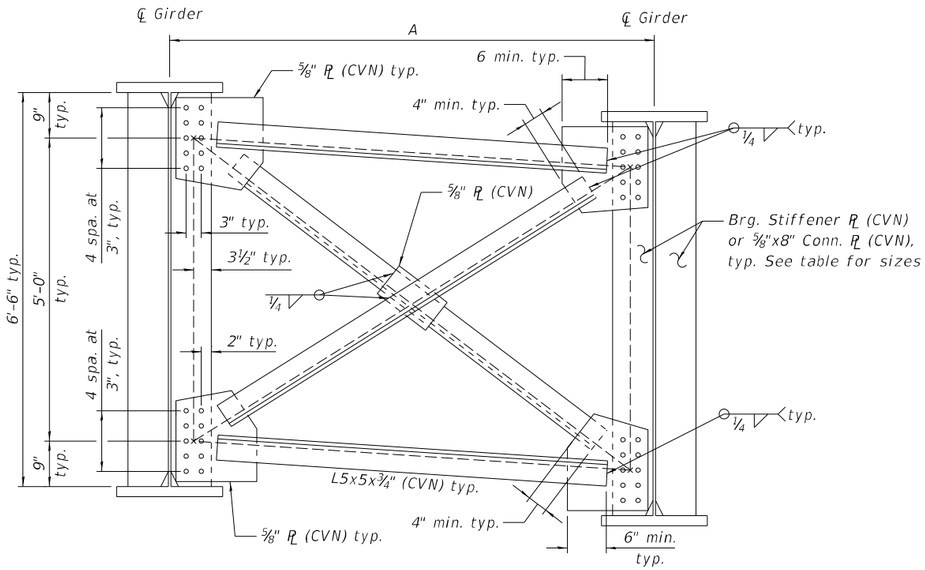

INTERIOR CROSS FRAME - TYPE 1

(188 Required)

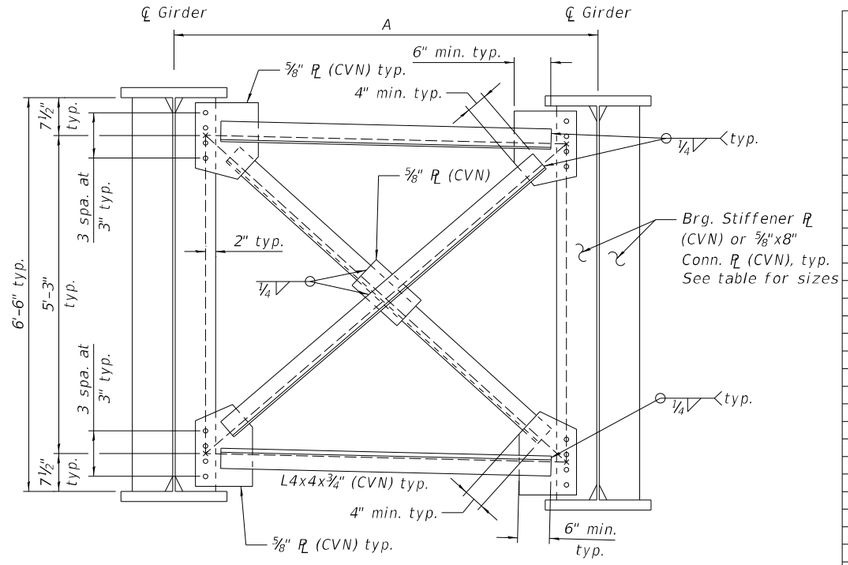

INTERIOR CROSS FRAME - TYPE 2

(89 Required)

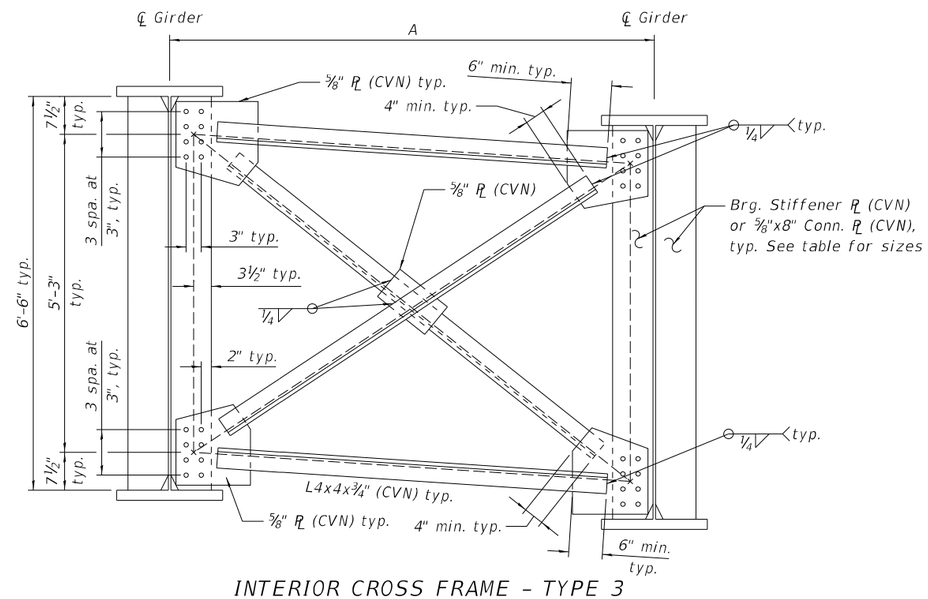

INTERIOR CROSS FRAME - TYPE 3

(84 Required)

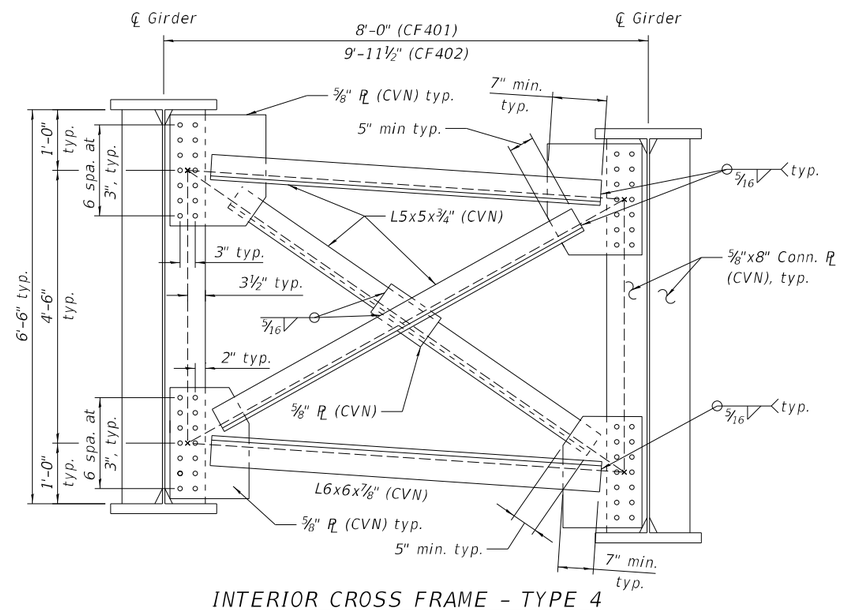

INTERIOR CROSS FRAME - TYPE 4

(3 Required)

NOTES:

1. See sheets S-94 thru S-102 for girder framing plan.
2. See Sheet S-135 for connection plate and bearing stiffener details.
3. All structural steel shall be AASHTO M270 Grade 50.
4. "CVN" denotes Charpy-V-Notch impact energy requirements, zone 2.
5. Fasteners shall be ASTM F3125 Grade A325 Type 1, mechanically galvanized bolts. Bolts ⅞"Ø, holes 15/16"Ø.
6. All cross frames or diaphragms between beams or girders shall be installed with erection pins and bolts in accordance with the erection plan approved by the Engineer. Individual cross frames or diaphragms at supports may be temporarily disconnected to install bearing anchor rods.
7. All faying surfaces of bolted connections must meet the requirements for a Class C surface as defined by AASHTO.

CROSS FRAME DETAILS - TYPE 3

Name	Type	Quantity	"A"	Left Conn. PL or Brg. PL	Right Conn. PL or Brg. PL
CF301	3	78	8' - 0"	5/8" x 8"	5/8" x 8"
CF302	3	3	8' - 0"	1" x 8"	1" x 8"
CF303	3	3	8' - 0"	1 1/4" x 12"	1 1/4" x 12"

CROSS FRAME DETAILS - TYPE 1 & 2

Name	Type	Quantity	"A"	Left Conn. PL or Brg. PL	Right Conn. PL or Brg. PL
CF101	1	71	8' - 0"	5/8" x 8"	5/8" x 8"
CF102	1	66	7' - 0"	5/8" x 8"	5/8" x 8"
CF103	1	1	7' - 1 7/8"	5/8" x 8"	5/8" x 8"
CF104	1	1	7' - 5 15/16"	5/8" x 8"	5/8" x 8"
CF105	1	1	7' - 10 5/8"	5/8" x 8"	5/8" x 8"
CF106	1	1	8' - 8 3/4"	5/8" x 8"	5/8" x 8"
CF107	1	1	8' - 7 5/16"	5/8" x 8"	5/8" x 8"
CF109	1	1	8'-0 1/16"	1 1/4" x 11"	1 1/4" x 11"
CF110	1	1	8'-0 1/16"	1 1/4" x 11"	1" x 9"
CF111	1	4	7' - 0"	1" x 8"	1" x 8"
CF112	1	1	8' - 0 1/8"	1" x 9"	1 1/4" x 11"
CF113	1	1	8' - 0 1/8"	1 1/4" x 11"	1 1/4" x 11"
CF114	1	1	5' - 10 1/8"	5/8" x 8"	5/8" x 8"
CF115	1	1	6' - 0 11/16"	5/8" x 8"	5/8" x 8"
CF116	1	1	6' - 1 1/2"	5/8" x 8"	5/8" x 8"
CF117	1	1	6' - 4 5/8"	5/8" x 8"	5/8" x 8"
CF118	1	1	6' - 5 3/8"	5/8" x 8"	5/8" x 8"
CF119	1	2	6' - 9 3/16"	5/8" x 8"	5/8" x 8"
CF120	1	1	7' - 1 3/4"	5/8" x 8"	5/8" x 8"
CF121	1	1	7' - 1 1/16"	5/8" x 8"	5/8" x 8"
CF122	1	1	7' - 6 5/16"	5/8" x 8"	5/8" x 8"
CF123	1	1	7' - 4 15/16"	5/8" x 8"	5/8" x 8"
CF124	1	1	7' - 10 7/8"	5/8" x 8"	5/8" x 8"
CF125	1	1	7' - 8 13/16"	5/8" x 8"	5/8" x 8"
CF126	1	1	8' - 3 7/16"	5/8" x 8"	5/8" x 8"
CF127	1	1	6' - 6 5/8"	5/8" x 8"	5/8" x 8"
CF128	1	1	5' - 5 3/8"	5/8" x 8"	5/8" x 8"
CF129	1	1	7' - 3 11/16"	5/8" x 8"	5/8" x 8"
CF130	1	1	5' - 10 5/8"	5/8" x 8"	5/8" x 8"
CF131	1	1	8' - 9 1/16"	5/8" x 8"	5/8" x 8"
CF132	1	1	5' - 4 3/4"	5/8" x 8"	5/8" x 8"
CF133	1	1	8'-0 1/16"	1 1/4" x 12"	1 1/4" x 12"
CF134	1	1	8'-0 1/16"	1 1/4" x 12"	1" x 9"
CF135	1	1	8'-0 1/16"	1" x 9"	1" x 9"
CF136	1	1	5' - 11 7/8"	1" x 9"	1" x 9"
CF137	1	2	7' - 0"	1" x 9"	1" x 9"
CF138	1	1	6' - 7"	5/8" x 8"	5/8" x 8"
CF139	1	1	7' - 2 11/16"	5/8" x 8"	5/8" x 8"
CF140	1	1	7' - 10 7/16"	5/8" x 8"	5/8" x 8"
CF141	1	1	8' - 6 1/8"	5/8" x 8"	5/8" x 8"
CF142	1	1	8' - 0 3/4"	5/8" x 8"	5/8" x 8"
CF143	1	1	6' - 3 7/8"	5/8" x 8"	5/8" x 8"
CF144	1	1	8' - 9 13/16"	5/8" x 8"	5/8" x 8"
CF145	1	1	6' - 9 1/8"	5/8" x 8"	5/8" x 8"
CF146	1	1	9' - 6 7/8"	5/8" x 8"	5/8" x 8"
CF147	1	1	7' - 2 7/16"	5/8" x 8"	5/8" x 8"
CF148	1	1	10' - 3 15/16"	5/8" x 8"	5/8" x 8"
CF149	1	1	7' - 7 11/16"	5/8" x 8"	5/8" x 8"
CF201	2	54	7' - 0"	5/8" x 8"	5/8" x 8"
CF202	2	4	7' - 0"	1" x 8"	1" x 8"
CF203	2	1	7' - 0"	1" x 9"	1" x 9"
CF204	2	2	4' - 9 15/16"	5/8" x 8"	5/8" x 8"
CF205	2	1	4' - 11 1/4"	5/8" x 8"	5/8" x 8"
CF206	2	1	5' - 3 3/16"	5/8" x 8"	5/8" x 8"
CF207	2	1	5'-6 15/16"	1" x 8"	1" x 8"
CF208	2	1	5' - 10 5/8"	5/8" x 8"	5/8" x 8"
CF209	2	1	6' - 2 5/8"	5/8" x 8"	5/8" x 8"
CF210	2	1	6' - 6 5/8"	5/8" x 8"	5/8" x 8"
CF211	2	1	6' - 10 9/16"	5/8" x 8"	5/8" x 8"
CF212	2	1	7' - 2 9/16"	5/8" x 8"	5/8" x 8"
CF213	2	1	7' - 6 9/16"	5/8" x 8"	5/8" x 8"
CF214	2	1	4' - 9 13/16"	5/8" x 8"	5/8" x 8"
CF215	2	1	5' - 0 3/16"	5/8" x 8"	5/8" x 8"
CF216	2	1	5' - 2 1/16"	1" x 9"	1 1/4" x 11"
CF217	2	1	5' - 3 15/16"	5/8" x 8"	5/8" x 8"
CF218	2	1	5' - 6"	5/8" x 8"	5/8" x 8"
CF219	2	1	5' - 8 1/16"	5/8" x 8"	5/8" x 8"
CF220	2	1	5' - 10 1/8"	5/8" x 8"	5/8" x 8"
CF221	2	1	6' - 0 1/8"	5/8" x 8"	5/8" x 8"
CF222	2	1	6' - 2 1/16"	5/8" x 8"	5/8" x 8"
CF223	2	1	6' - 3 15/16"	5/8" x 8"	5/8" x 8"
CF224	2	1	6' - 5 7/8"	5/8" x 8"	5/8" x 8"
CF225	2	1	6' - 7 3/4"	5/8" x 8"	5/8" x 8"
CF226	2	1	6' - 9 9/16"	1" x 8"	1" x 8"
CF227	2	1	6' - 11 5/16"	5/8" x 8"	5/8" x 8"
CF228	2	1	7' - 1 1/4"	5/8" x 8"	5/8" x 8"
CF229	2	1	7' - 3 3/16"	5/8" x 8"	5/8" x 8"
CF230	2	1	7' - 5 1/8"	5/8" x 8"	5/8" x 8"
CF231	2	1	7' - 7"	5/8" x 8"	5/8" x 8"
CF232	2	1	7' - 8 15/16"	5/8" x 8"	5/8" x 8"

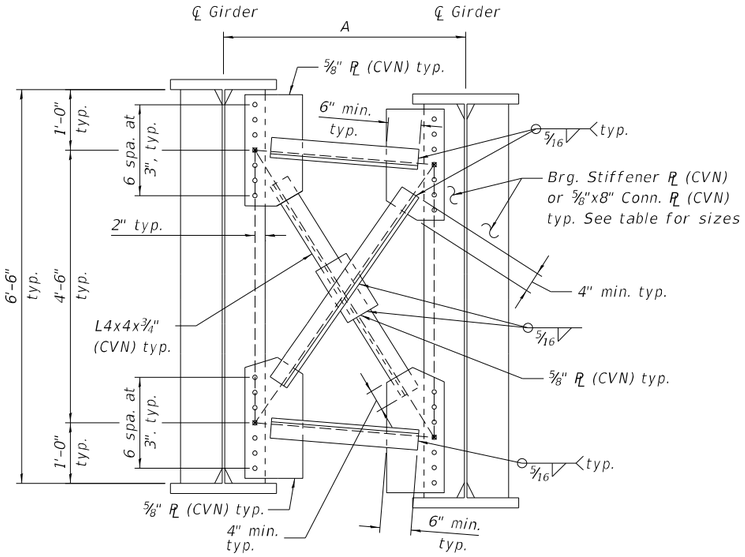

INTERIOR CROSS FRAME – TYPE 5

(15 REQUIRED)

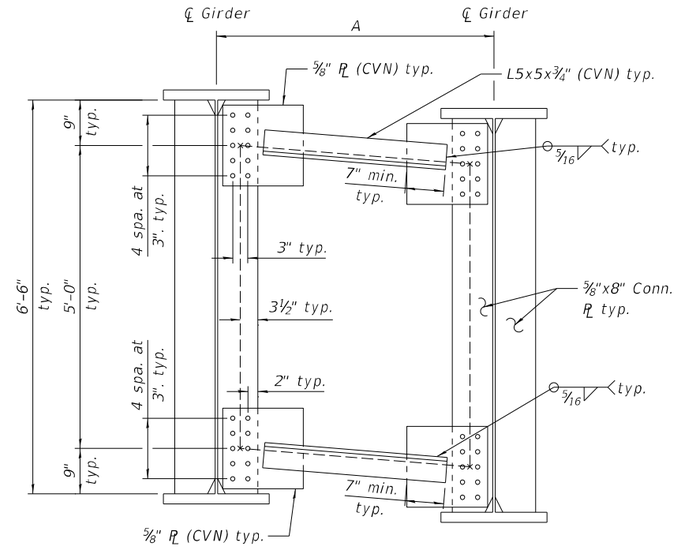

INTERIOR CROSS FRAME – TYPE 6

(14 REQUIRED)

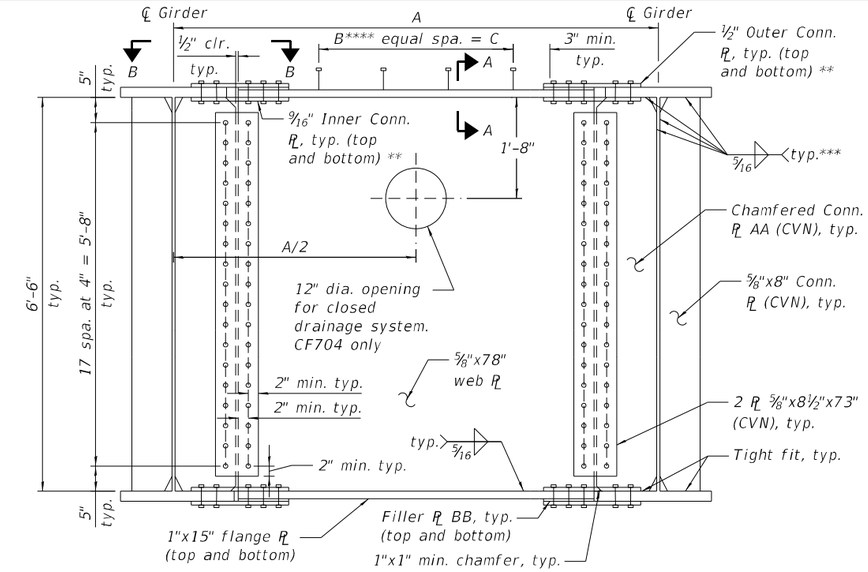

INTERIOR CROSS FRAME – TYPE 7

(14 REQUIRED)

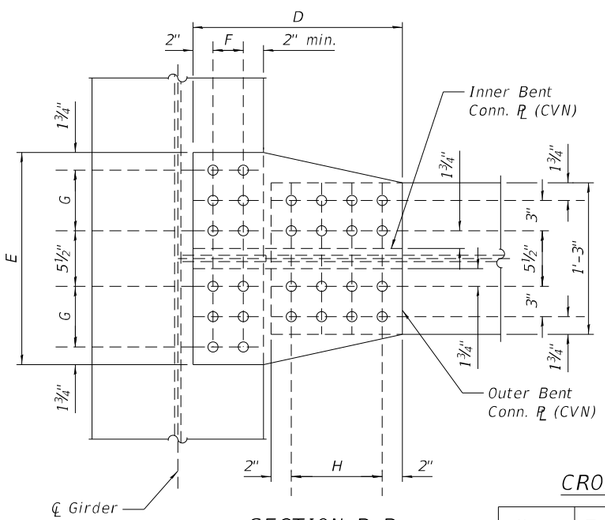

SECTION B-B

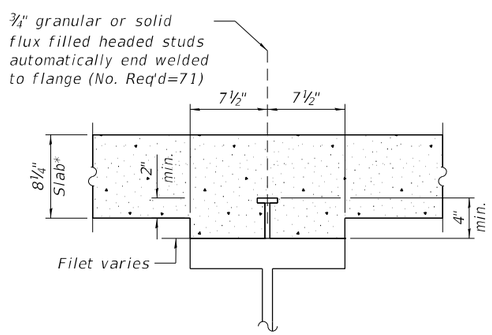

SECTION A-A

*Prior to grinding

CROSS FRAME DETAILS – TYPE 5 & 6

Name	Type	Quantity	"A"	Left Conn. PL or Brg. PL	Right Conn. PL or Brg. PL
CF501	5	1	5' – 0"	5/8" x 8"	5/8" x 8"
CF502	5	1	5' 0 3/4"	5/8" x 8"	5/8" x 8"
CF503	5	1	5' – 4"	5/8" x 8"	5/8" x 8"
CF504	5	1	5' – 5 7/16"	5/8" x 8"	5/8" x 8"
CF505	5	1	5' – 7 3/16"	1" x 9"	1" x 9"
CF506	5	1	5' – 9 1/4"	1" x 9"	1" x 8"
CF507	5	1	4' – 9 15/16"	1" x 9"	1" x 9"
CF508	5	1	4'-8 3/8"	5/8" x 8"	5/8" x 8"
CF509	5	1	4'-4 7/16"	5/8" x 8"	5/8" x 8"
CF510	5	1	4' – 7"	1" x 8"	1" x 8"
CF511	5	1	5' -3 7/8"	1" x 8"	1" x 9"
CF512	5	1	4'-8 7/8"	1" x 9"	1" x 9"
CF513	5	1	5' – 10 3/4"	5/8" x 8"	5/8" x 8"
CF514	5	1	5' – 0 13/16"	5/8" x 8"	5/8" x 8"
CF515	5	1	7' – 0"	1" x 9"	1" x 9"
CF601	6	5	4' – 9 15/16"	5/8" x 8"	5/8" x 8"
CF602	6	9	4' – 7"	5/8" x 8"	5/8" x 8"

CROSS FRAME DETAILS – TYPE 7

Name	Qty	Bay Width A	Shear Studs B	Shear Studs C	Location*	Conn. PL AA	Flange Plate Connections BB	D	E	F	G	H
CF701	1	8'-0"	5	4'-9 3/8"	Left	5/8"x8 1/2"	1/4"x1'-3"x7"	1'-2 7/8"	1'-3"	1 spa. @ 3" = 3"	1 spa. @ 3" = 3"	1 spa. @ 3" = 3"
					Right	5/8"x8 1/2"	1/4"x1'-3"x7"	1'-2 7/8"	1'-3"	1 spa. @ 3" = 3"	1 spa. @ 3" = 3"	1 spa. @ 3" = 3"
CF702	1	8'-0"	5	4'-9 3/8"	Left	5/8"x8 1/2"	1/4"x1'-3"x7"	1'-2 7/8"	1'-3"	1 spa. @ 3" = 3"	1 spa. @ 3" = 3"	1 spa. @ 3" = 3"
					Right	5/8"x8 1/2"	--	1'-2 7/8"	1'-3"	1 spa. @ 3" = 3"	1 spa. @ 3" = 3"	1 spa. @ 3" = 3"
CF703	1	8'-0"	5	4'-6 3/8"	Left	5/8"x8 1/2"	--	1'-2 7/8"	1'-3"	1 spa. @ 3" = 3"	1 spa. @ 3" = 3"	1 spa. @ 3" = 3"
					Right	5/8"x8 1/2"	--	1'-5 7/8"	1'-9"	1 spa. @ 3" = 3"	2 spa. @ 3" = 6"	2 spa. @ 3" = 6"
CF704	1	9'-1 13/16"	6	5'-8 3/16"	Left	5/8"x8 1/2"	--	1'-5 7/8"	1'-9"	1 spa. @ 3" = 3"	2 spa. @ 3" = 6"	2 spa. @ 3" = 6"
					Right	5/8"x8 1/2"	--	1'-2 7/8"	1'-3"	1 spa. @ 3" = 3"	1 spa. @ 3" = 3"	1 spa. @ 3" = 3"
CF705	1	4'-9 15/16"	2	1'-7 5/16"	Left	5/8"x8 1/2"	--	1'-2 7/8"	1'-3"	1 spa. @ 3" = 3"	1 spa. @ 3" = 3"	1 spa. @ 3" = 3"
					Right	5/8"x8 1/2"	--	1'-2 7/8"	1'-3"	1 spa. @ 3" = 3"	1 spa. @ 3" = 3"	1 spa. @ 3" = 3"
CF706	2	7'-0"	4	3'-9 3/8"	Left	5/8"x8 1/2"	--	1'-2 7/8"	1'-3"	1 spa. @ 3" = 3"	1 spa. @ 3" = 3"	1 spa. @ 3" = 3"
					Right	5/8"x8 1/2"	--	1'-2 7/8"	1'-3"	1 spa. @ 3" = 3"	1 spa. @ 3" = 3"	1 spa. @ 3" = 3"
CF707	2	7'-0"	4	3'-2 3/8"	Left	5/8"x12"	3/4"x1'-3"x7"	1'-4 3/8"	1'-3"	1 spa. @ 3" = 3"	1 spa. @ 3" = 3"	1 spa. @ 3" = 3"
					Right	5/8"x12"	3/4"x1'-3"x7"	1'-4 3/8"	1'-3"	1 spa. @ 3" = 3"	1 spa. @ 3" = 3"	1 spa. @ 3" = 3"
CF708	1	4'-7 1/2"	N/A	N/A	Left	5/8"x12"	3/4"x1'-3"x7"	1'-4 3/8"	1'-3"	1 spa. @ 3" = 3"	1 spa. @ 3" = 3"	1 spa. @ 3" = 3"
					Right	5/8"x13 1/2"	3/4"x1'-3"x10"	1'-10 3/8"	1'-3"	2 spa. @ 3" = 6"	1 spa. @ 3" = 3"	2 spa. @ 3" = 6"
CF709	1	11'-2 1/16"	7	6'-2 15/16"	Left	5/8"x13 1/2"	3/4"x1'-3"x10"	1'-10 3/8"	1'-3"	2 spa. @ 3" = 6"	1 spa. @ 3" = 3"	2 spa. @ 3" = 6"
					Right	5/8"x15"	1 1/2"x1'-3"x1'-1"	2'-4 3/8"	1'-3"	3 spa. @ 3" = 9"	1 spa. @ 3" = 3"	3 spa. @ 3" = 9"
CF710	1	8'-0"	3	2'-11 3/8"	Left	5/8"x15"	1 1/2"x1'-3"x1'-1"	2'-4 3/8"	1'-3"	3 spa. @ 3" = 9"	1 spa. @ 3" = 3"	3 spa. @ 3" = 9"
					Right	5/8"x15"	1 1/2"x1'-3"x10"	1'-10 3/8"	1'-3"	2 spa. @ 3" = 6"	1 spa. @ 3" = 3"	2 spa. @ 3" = 6"
CF711	1	8'-0"	4	3'-5 3/8"	Left	5/8"x15"	1 1/2"x1'-3"x10"	1'-10 3/8"	1'-3"	2 spa. @ 3" = 6"	1 spa. @ 3" = 3"	2 spa. @ 3" = 6"
					Right	5/8"x15"	3/4"x1'-3"x7"	1'-4 3/8"	1'-3"	1 spa. @ 3" = 3"	1 spa. @ 3" = 3"	1 spa. @ 3" = 3"
CF712	1	8'-0"	4	3'-8 3/8"	Left	5/8"x15"	3/4"x1'-3"x7"	1'-4 3/8"	1'-3"	1 spa. @ 3" = 3"	1 spa. @ 3" = 3"	1 spa. @ 3" = 3"
					Right	5/8"x15"	3/4"x1'-3"x7"	1'-4 3/8"	1'-3"	1 spa. @ 3" = 3"	1 spa. @ 3" = 3"	1 spa. @ 3" = 3"

* Location is based on looking upstation.
** Connection Plates to be bent at edge of flange to accommodate slope of Cross Frame.
*** Terminate 1/4" (±1/8") from the end of plate intersects.
**** CF708 will have 1 shear stud centered between Connection Plates.

NOTES:

1. See sheet S-137 for typical notes.

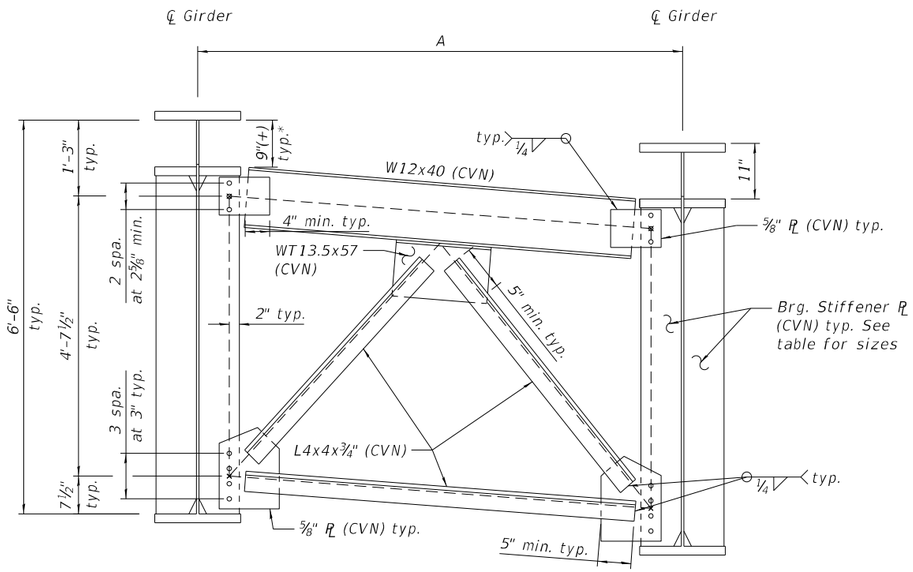

END CROSS FRAME - Type 8

(22 Required)

*to be coordinated with expansion joint manufacturer

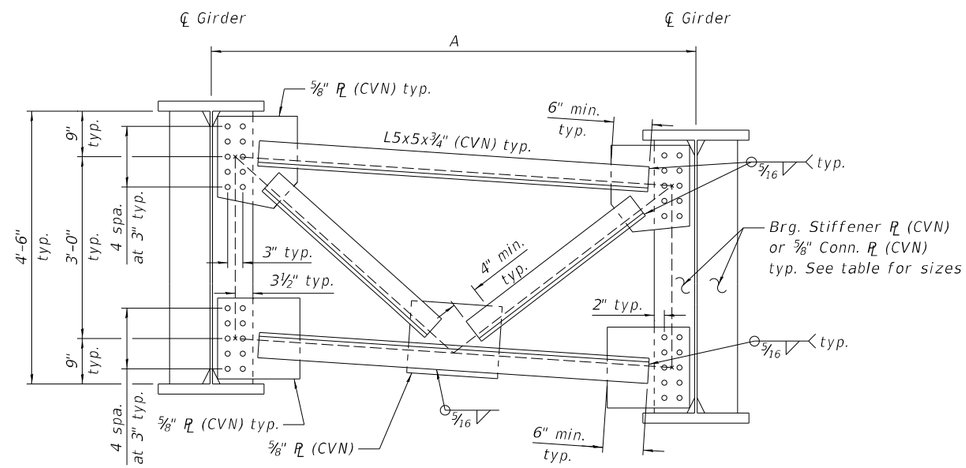

INTERIOR CROSS FRAME - TYPE 9

(29 Required)

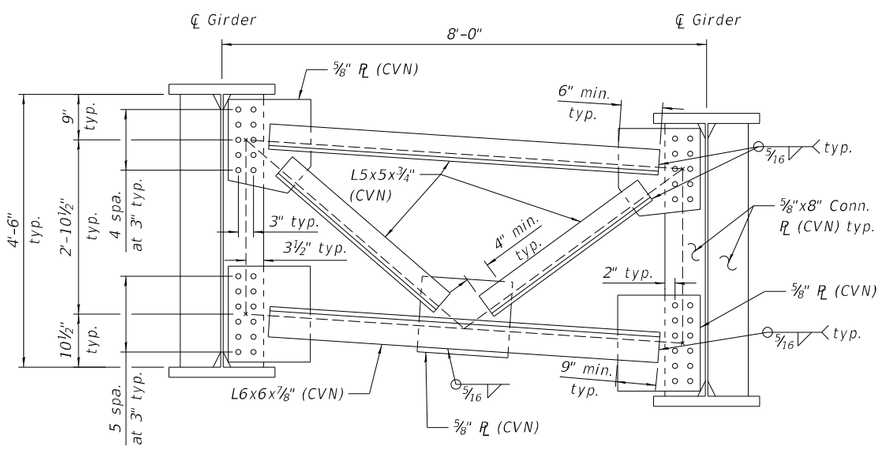

INTERIOR CROSS FRAME- CF1001

(4 Required)

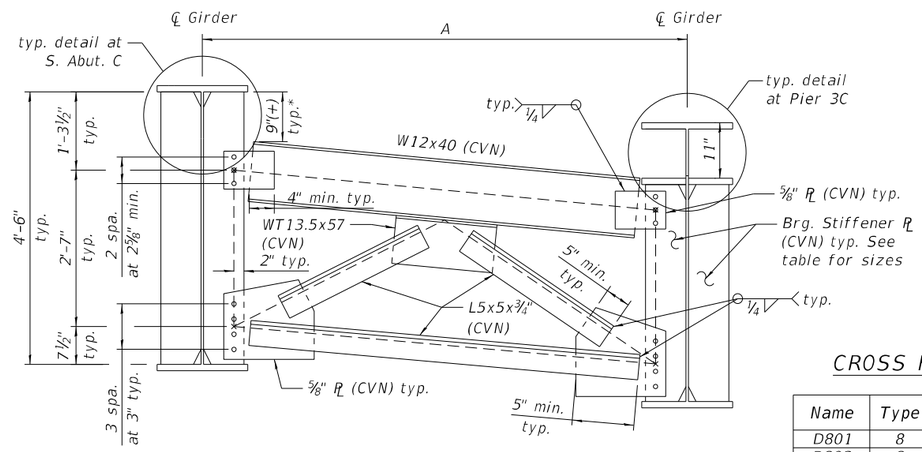

END CROSS FRAME - TYPE 11

(6 Required)

*to be coordinated with expansion joint manufacturer

CROSS FRAME DETAILS - TYPE 8, 9 and 11

Name	Type	Quantity	"A"	Left Conn. PL or Brg. PL	Right Conn. PL or Brg. PL
D801	8	1	8' - 0 1/16"	1 1/4" x 11"	1 1/4" x 11"
D802	8	1	8' - 0 1/16"	1 1/4" x 11"	1" x 8"
D803	8	1	6' - 4 7/8"	1" x 8"	1" x 8"
D804	8	8	7' - 0"	1" x 8"	1" x 8"
D805	8	1	6' - 2 5/8"	1" x 8"	1" x 9"
D806	8	1	8' - 0 1/8"	1" x 9"	1 1/4" x 11"
D807	8	1	8' - 0 1/8"	1 1/4" x 11"	1 1/4" x 11"
D808	8	3	8' - 0"	1" x 8"	1" x 8"
D809	8	1	7' - 10 9/16"	1" x 8"	1" x 8"
D810	8	1	7' - 10 7/8"	1" x 8"	1" x 8"
D811	8	3	8' - 0"	1" x 9"	1" x 9"
CF901	9	26	8' - 0"	5/8" x 8"	5/8" x 8"
CF902	9	1	8' - 0"	1" x 10"	1" x 10"
CF903	9	1	8' - 0"	1" x 10"	1" x 8"
CF904	9	1	8' - 0"	1" x 8"	1" x 8"
D1101	11	2	8' - 0"	1" x 10"	1" x 10"
D1102	11	2	8' - 0"	1" x 10"	1" x 8"
D1103	11	2	8' - 0"	1" x 8"	1" x 8"

NOTES:

1. See sheet S-137 for typical notes.

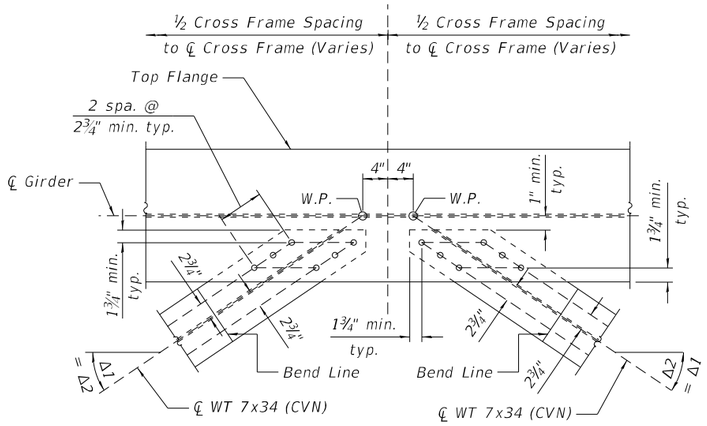

DETAIL 1

(Connection adjacent to typical Cross Frame)

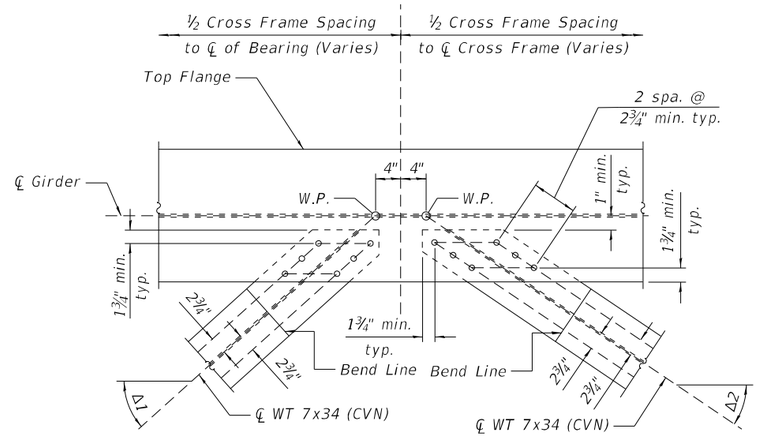

DETAIL 3

(Connection adjacent to Pier)

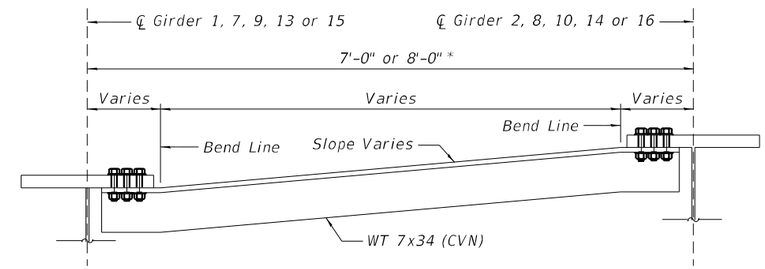

TOP LATERAL BRACING SECTION

*Measured perpendicular to ℄ girders

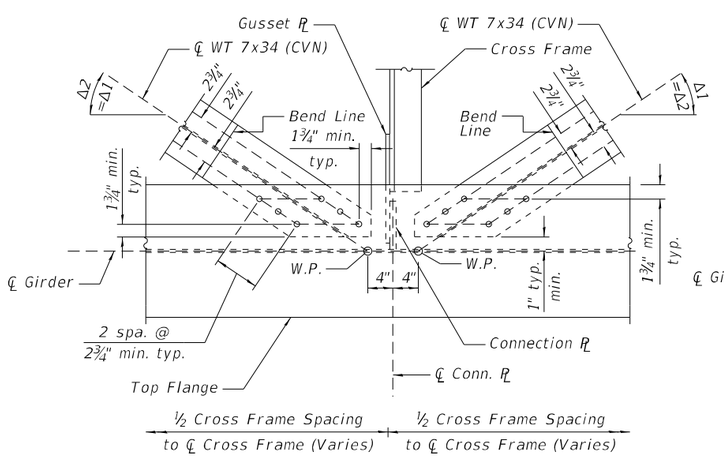

DETAIL 2

(Connection at typical Cross Frame)

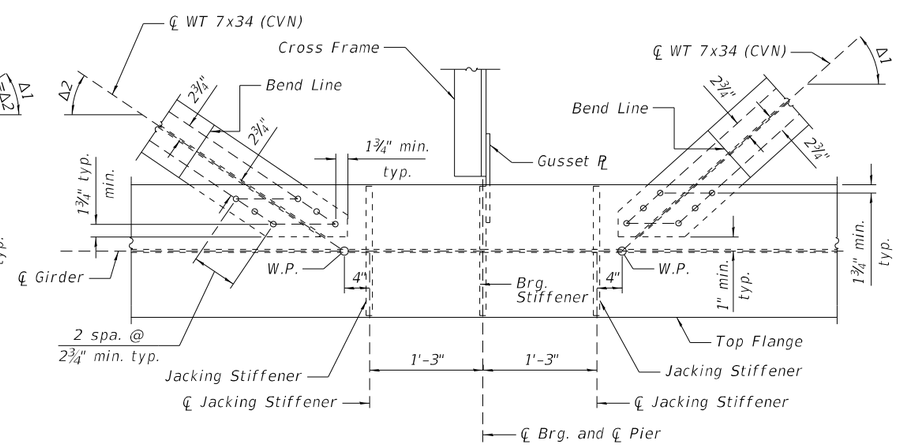

DETAIL 4

(Connection at Pier)

NOTES:

1. See sheets S-94 thru S-102 for girder framing plan.
2. All structural steel shall be AASHTO M270 Grade 50.
3. "CVN" denotes Charpy-V-Notch impact energy requirements, zone 2.
4. Fasteners shall be ASTM F3125 Grade A325 Type 1, mechanically galvanized bolts. Bolts ⅞"Ø, oversized holes 1 1/16"Ø, and two hardened washers per oversized hole.
5. Lateral Bracing members shall be bent as shown in the Section above to accommodate the difference in elevations of adjacent girders.
6. W.P. denotes Work Point.
7. All faying surfaces of bolted connections must meet the requirements for a Class C surface as defined by AASHTO.
8. DO NOT place shear connectors on top lateral bracing bolted connections. Move studs to 6" beyond extreme top lateral bracing bolt and space moved rows 6" min.

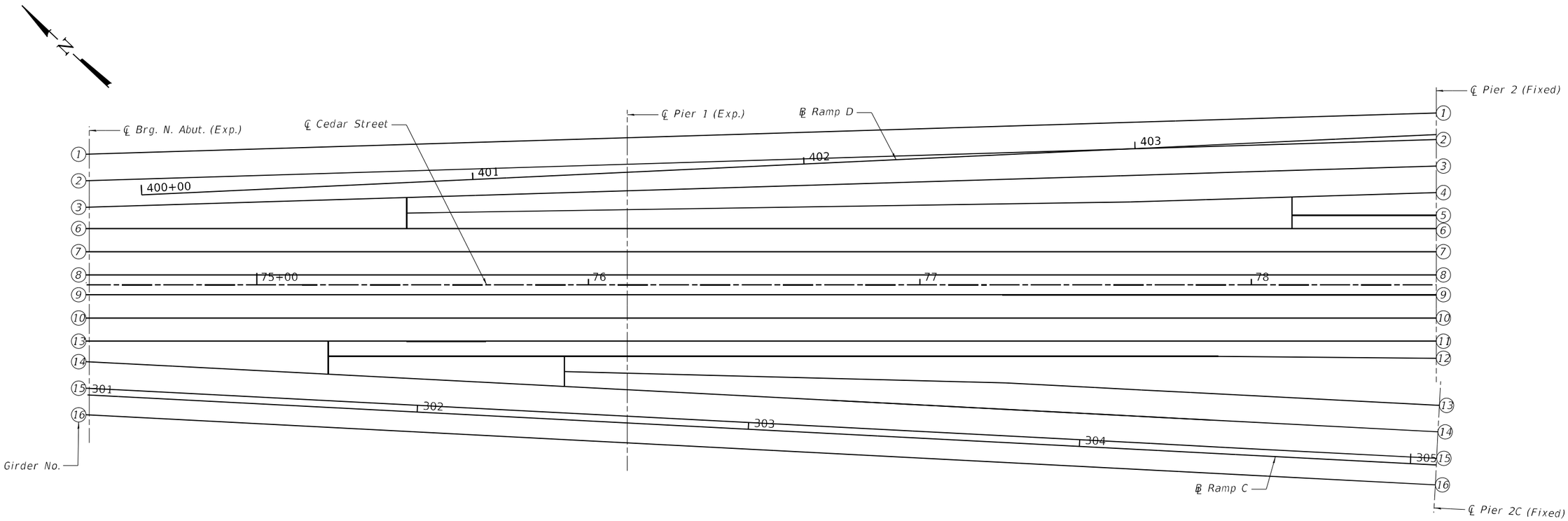

NOTES:

A = Angle between ℄ Brg. Pier or Abutment and Direction of Movement/Chord.
B = Angle between Tangent to Girder and ℄ Brg. Pier or Abutment.
C = Setting angle between ℄ Top Bearing Plate and ℄ Brg. Pier 1 OR
Setting angle between ℄ Top Bearing Plate & ℄ Bottom Bearing Plate and ℄ Brg. N. Abut., Pier 2, & Pier 2C.
D = Set Top Bearing Plate at right angle to the Direction of Movement/Chord.

See sheet S-143 for Angles A, B, & C.

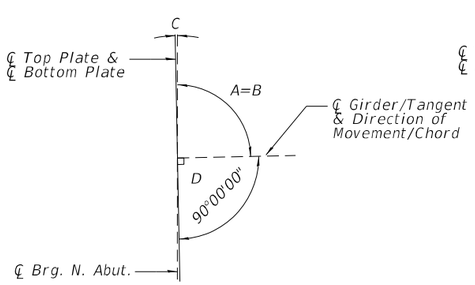

N. Abut. - LT

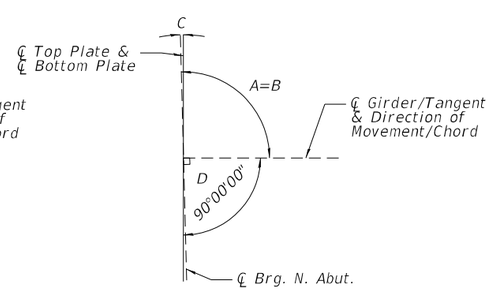

N. Abut. - RT

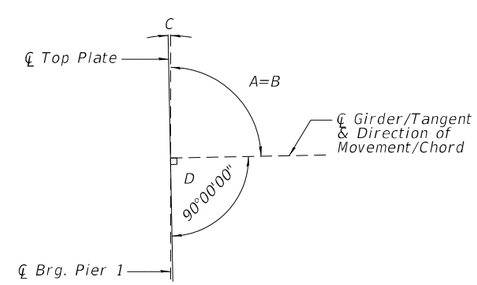

Pier 1 - LT

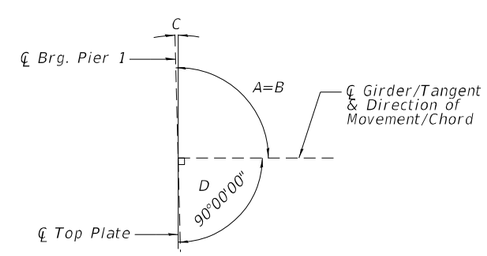

Pier 1 - RT

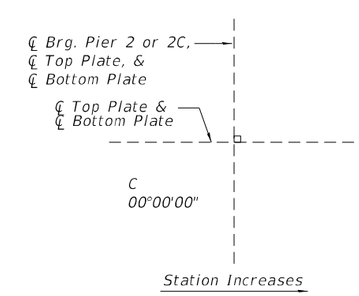

Pier 2 & Pier 2C

BEARING ORIENTATION - UNIT 1

Michael Baker INTERNATIONAL
200 W Adams Street
Suite 1800
Chicago, IL 60606
P:+1 312.707.8770
FAX: 312.707.8804

USER NAME = DLamb	DESIGNED - AMR	REVISED -	
	CHECKED - JTB	REVISED -	
PLOT SCALE = 31:11.9985 ':" / in.	DRAWN - DMJ	REVISED -	
PLOT DATE = 6/6/2023	CHECKED - JTB	REVISED -	

STATE OF ILLINOIS
DEPARTMENT OF TRANSPORTATION

BEARING LAYOUT & ORIENTATION 1
STRUCTURE NO. 090-0182

SHEET S-141 OF S-194 SHEETS

F.A.P. RTE.	SECTION	COUNTY	TOTAL SHEETS	SHEET NO.
VAR.	13 (HVB, HB-3) BR-1;R	TAZEWELL	1173	667
		CONTRACT NO. 68C55		
		ILLINOIS	FED. AID PROJECT	

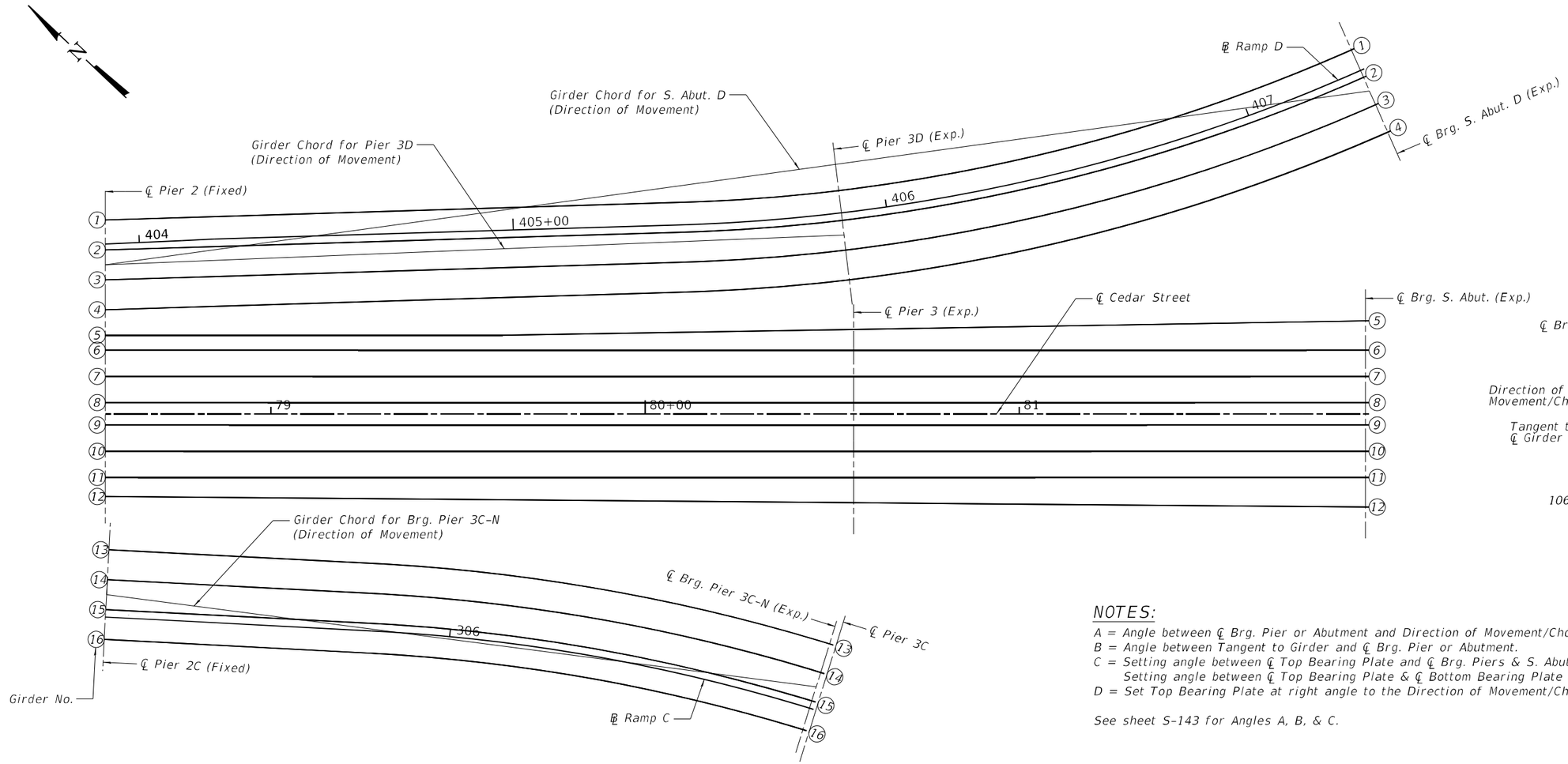

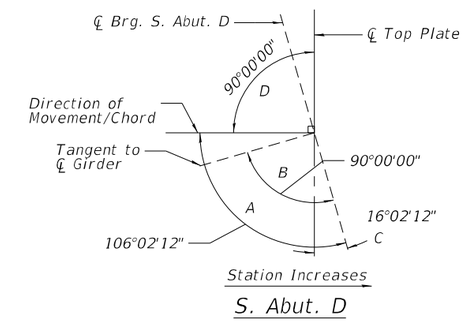

NOTES:

A = Angle between ℄ Brg. Pier or Abutment and Direction of Movement/Chord.
B = Angle between Tangent to Girder and ℄ Brg. Pier or Abutment.
C = Setting angle between ℄ Top Bearing Plate and ℄ Brg. Piers & S. Abut. D OR
Setting angle between ℄ Top Bearing Plate & ℄ Bottom Bearing Plate and ℄ Brg. S. Abut.
D = Set Top Bearing Plate at right angle to the Direction of Movement/Chord.

See sheet S-143 for Angles A, B, & C.

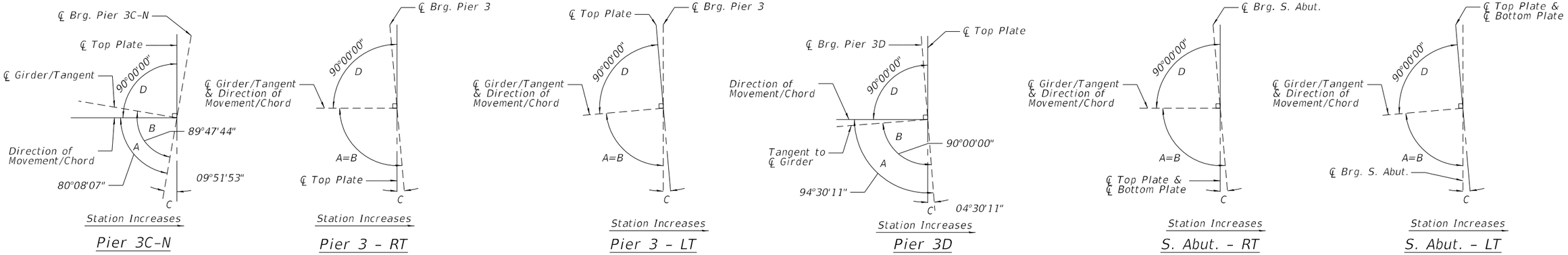

BEARING ORIENTATION - UNIT 1

MODEL: Default
FILE NAME: pw:\\mbs-us-pw.bentley.com:mbs-us-pw-931\Documents\Chicago_IL\01_Projects\179740_IDOT Ceda\SIE+ PhII\5.0 CADD\CAD Sheets\0900187-68C55-142-Brg Layout2.dgn

Michael Baker INTERNATIONAL
200 W Adams Street
Suite 1800
Chicago, IL 60606
PH: 312.707.8700
FAX: 312.707.8804

USER NAME = DLamb	DESIGNED - AMR	REVISED -
	CHECKED - JTB	REVISED -
PLOT SCALE = 31:11.9985 ':" / in.	DRAWN - DMJ	REVISED -
PLOT DATE = 6/6/2023	CHECKED - JTB	REVISED -

STATE OF ILLINOIS
DEPARTMENT OF TRANSPORTATION

BEARING LAYOUT & ORIENTATION 2
STRUCTURE NO. 090-0182

SHEET S-142 OF S-194 SHEETS

F.A.P. RTE.	SECTION	COUNTY	TOTAL SHEETS	SHEET NO.
VAR.	13 (HVB, HB-3) BR-1;R	TAZEWELL	1173	668
		CONTRACT NO. 68C55		
		ILLINOIS	FED. AID PROJECT	

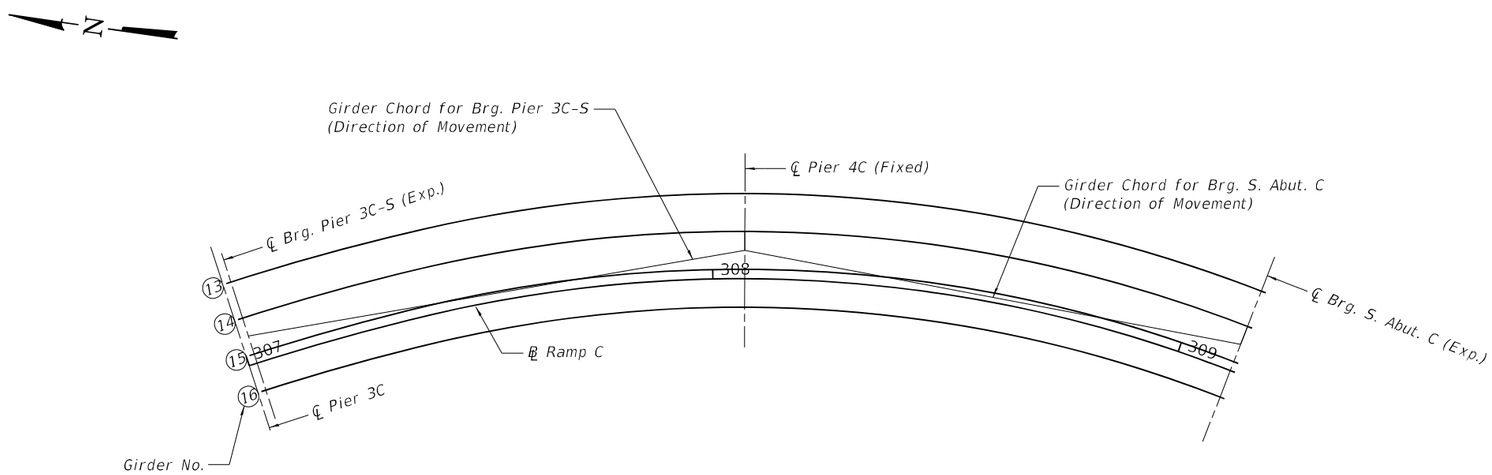

Support	Girders	A	B	C
N. Abut.	1 to 3	88° 14' 59"	88° 14' 59"	01° 45' 01"
	6 to 8 & 9 to 11	90° 00' 00"	90° 00' 00"	00° 00' 00"
	14 to 16	92° 58' 18"	92° 58' 18"	02° 58' 18"
Pier 1	1 to 3	88° 14' 59"	88° 14' 59"	01° 45' 01"
	4	89° 03' 10"	89° 03' 10"	00° 56' 50"
	6 to 8 & 9 to 12	90° 00' 00"	90° 00' 00"	00° 00' 00"
	13	91° 52' 47"	91° 52' 47"	01° 52' 47"
	14 to 16	92° 58' 18"	92° 58' 18"	02° 58' 18"
Pier 3	5	89° 02' 11"	89° 02' 11"	00° 57' 49"
	6 to 8 & 9 to 11	90° 00' 00"	90° 00' 00"	00° 00' 00"
	12	90° 27' 55"	90° 27' 55"	00° 27' 55"
S. Abut.	5	89° 02' 11"	89° 02' 11"	00° 57' 49"
	6 to 8 & 9 to 11	90° 00' 00"	90° 00' 00"	00° 00' 00"
	12	90° 27' 55"	90° 27' 55"	00° 27' 55"

NOTES:

A = Angle between ℄ Brg. Pier or Abutment and Direction of Movement/Chord.
B = Angle between Tangent to Girder and ℄ Brg. Pier or Abutment.
C = Setting angle between ℄ Top Bearing Plate and ℄ Brg. Pier 3C-S & S. Abut. C OR
Setting angle between ℄ Top Bearing Plate & ℄ Bottom Bearing Plate and ℄ Brg. Pier 4C.
D = Set Top Bearing Plate at right angle to the Direction of Movement/Chord.

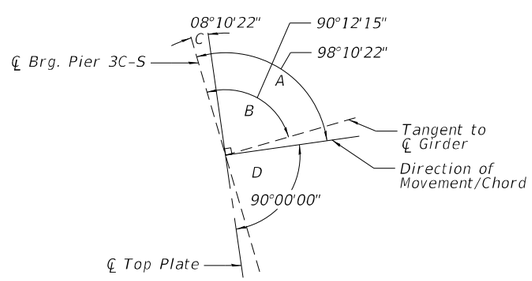

Pier 3C-S

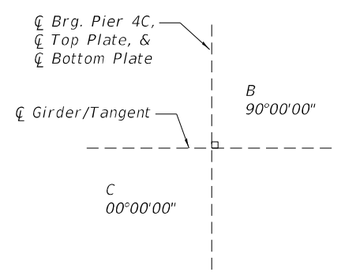

Pier 4C

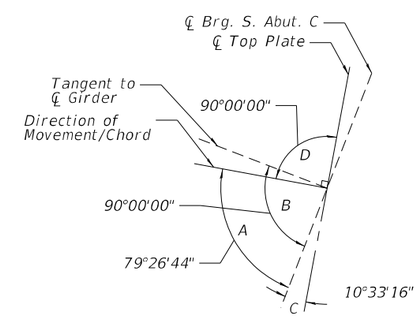

S. Abut. C

BEARING ORIENTATION - UNIT 2

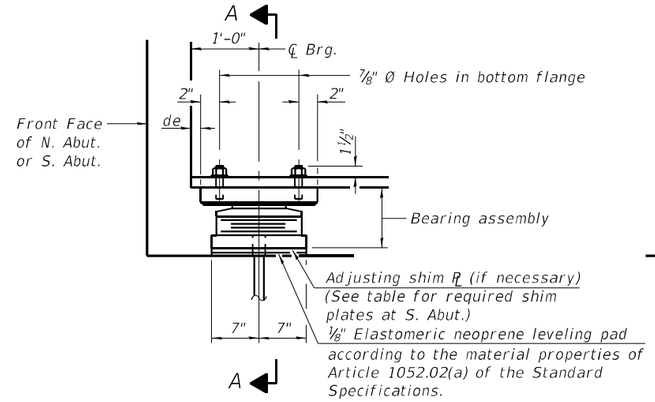

ELEVATION AT ABUT.

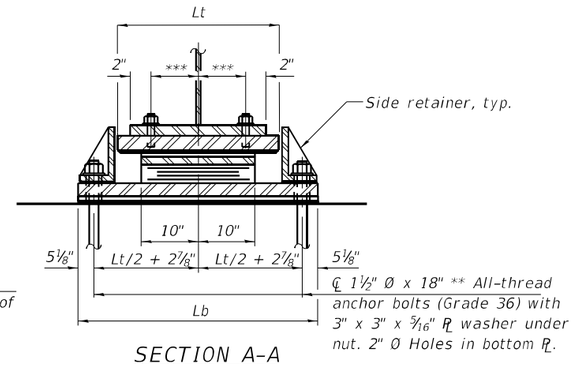

SECTION A-A

** Length shown is minimum required embedment length.
*** Varies per Girder at N. Abut. & 6½" at S. Abut.

TYPE II ELASTOMERIC EXP. BRG.

N. Abutment and S. Abutment

BEARING DATA

	N. Abut.	S. Abut.
Lt	2' - 0"	1' - 10"
wt	1' - 4 1/2"	1' - 3 3/4"
de	3 3/4"	4 1/8"
Tt1	2"	1 7/8"
Tt2	2 3/8"	2 1/4"
TtCL	2 3/16"	2 1/16"
Lb	3' - 4"	3' - 2"
Tb	1 3/4"	1 5/8"
Te	5 9/16"	4 3/4"
Np	6	5
Ns	5	4

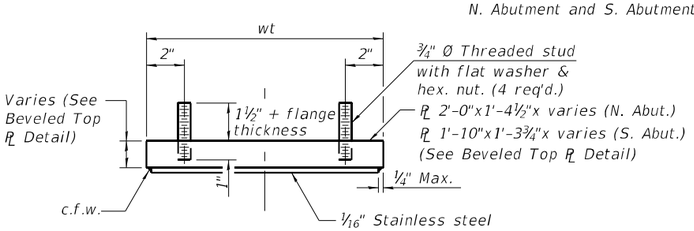

TOP BEARING ASSEMBLY

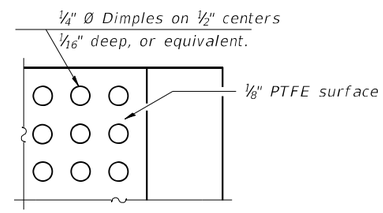

PLAN-PTFE SURFACE

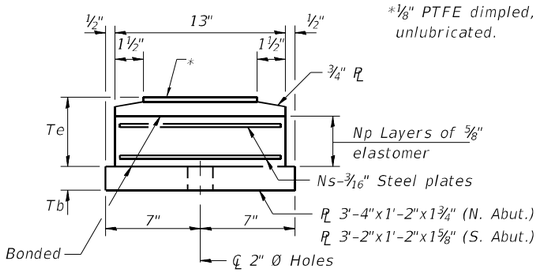

BOTTOM BEARING ASSEMBLY

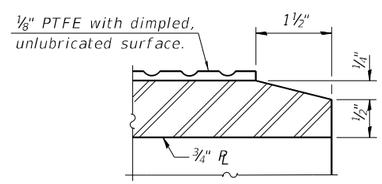

SECTION THRU PTFE

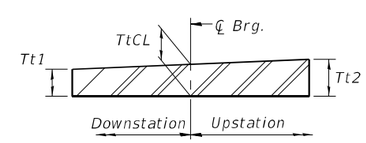

BEVELED TOP PL DETAIL

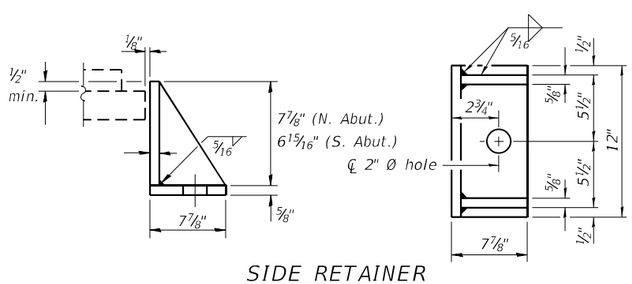

SIDE RETAINER

Equivalent rolled angle with stiffeners will be allowed in lieu of welded plates.

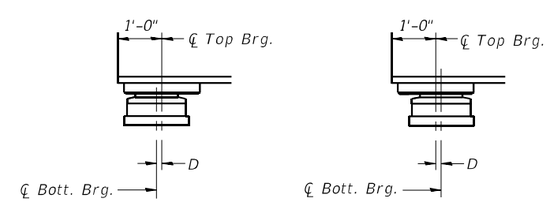

BELOW 50°F. ABOVE 50°F.

D=⅛" per each 100' of expansion for every 15° temp. change from the normal temp. of 50°F.

EXPANSION BEARING ORIENTATION

The above diagrams are for informational purposes only to show the amount of expected offset "D" for the current temperature in the field.

NOTES:

1. Anchor bolts shall be ASTM F1554 all-thread (or an Engineer-approved alternate material) of the grade(s) and diameter(s) specified. The corresponding specified grade of AASHTO M314 anchor bolts may be used in lieu of ASTM F1554.
2. Anchor bolts for Type II bearings shall be placed in holes drilled in the concrete though holes in the bottom bearing plate after members area in place. Side retainers shall be placed after bolts are installed.
3. Drilled and set anchor bolts shall be installed according to Article 521.06 of the Standard Specifications.
4. Side retainers, leveling pad, and other steel members required for the elastomeric bearing assembly shall be included in the cost of Elastomeric Bearing Assembly, Type II.
5. The ⅛" PTFE sheet shall be bonded directly to the top steel plate with a two-component, medium viscosity epoxy resin, conforming to the requirements of the Federal Specification MMM-A-134, Type I. The bond agent shall be applied on the full area of the contact surfaces.
6. Bonding of the ⅛" PTFE sheet during vulcanizing process will be permitted provided the process and method of adjusting assembly height is approved by the Engineer.
7. Two ⅛ in. adjusting shims shall be provided for each bearing in addition to all other plates or shims and placed as shown on the bearing details. Cost included with bearing pay item.
8. All bearing plates, H.S. studs, anchor bolts, side retainers, nuts, and washers shall be galvanized according to AASHTO M111 or M232 as applicable.
9. The structural steel for Elastomeric Bearing Assembly shall conform to the requirements of AASHTO M270 Grade 50.
10. Anchor bolts and side retainers at all supports shall be installed as each member is erected unless an equivalent temporary means of lateral restraint in used.

BILL OF MATERIAL

Item	Unit	Total
Elastomeric Bearing Assembly Type II	Each	20
Anchor Bolts, 1 1/2"	Each	40

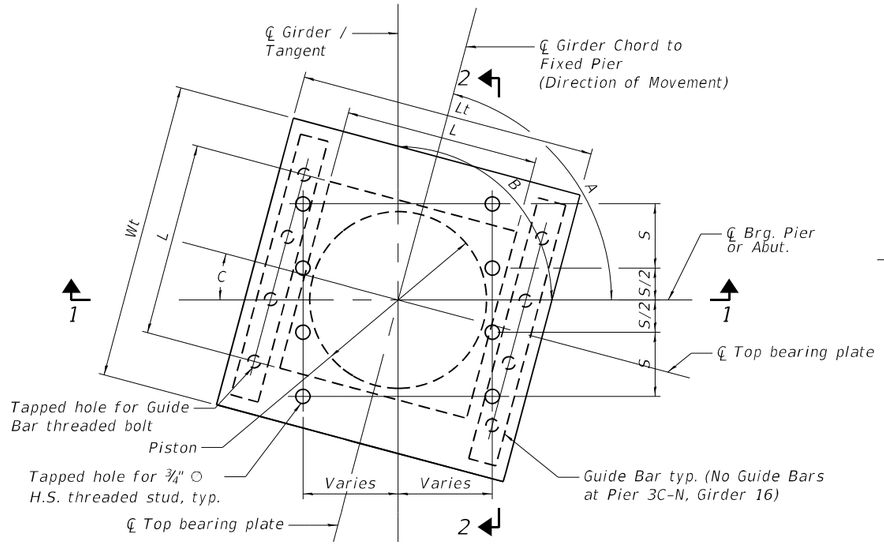

TOP BEARING ℄ AND PISTON PLAN

See sheet S-143 for Angles A, B, & C.

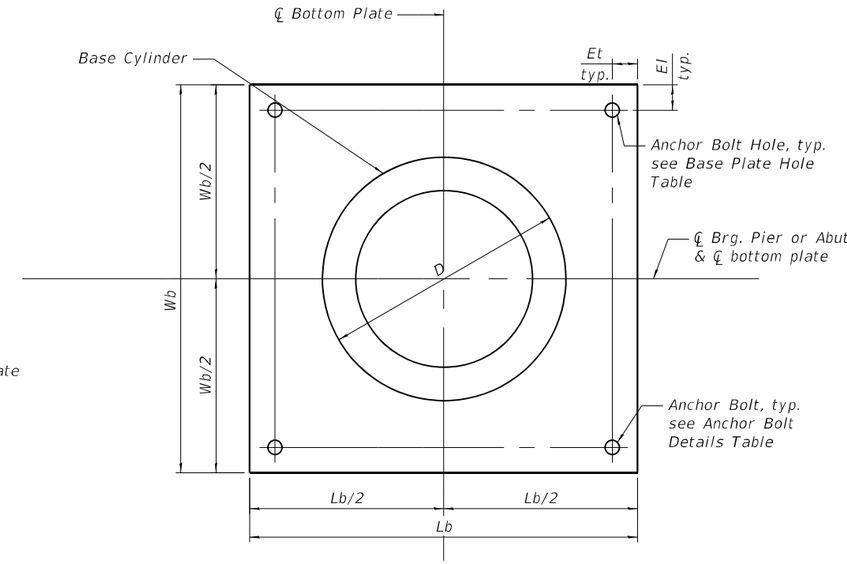

BOTTOM BEARING ℄ AND BASE CYLINDER PLAN

NOTES:

1. The Structural Steel for the top and bottom bearing plates shall be AASHTO M270 Grade 50.
2. For threaded studs and anchor bolt type and size, see Guided Expansion Bearing Design Criteria and Dimensions Table on sheet S-146.
3. Top & bottom plates, threaded studs, washers, & shim plates are included in the cost of the High Load Multi-Rotational Bearings, Guided (or Non-Guided) Expansion.
4. Anchor bolts for bearings shall be placed in holes drilled in the concrete through holes in the botom bearing plate after members are in place.
5. Drilled and set anchor bolts shall be installed according to Article 521.06 of the Standard Specifications.
6. The ⅛" PTFE sheet shall be bonded directly to the piston with a two-component, medium viscosity epoxy resin, conforming to the requiremnts of the Federal Specification MMM-A-134, Type I. The bond agent shall be applied on the full area of the contact surfaces. See sheet 146 for PTFE details.
7. Two ⅛" adjusting shims shall be provided for each bearing in addition to all other plates or shims and placed as shown on the bearing details. Cost included with bearing pay item.
8. Work this sheet with sheet S-146.
9. All bearing plates, H.S. studs, anchor bolts, nuts and washers shall be galvanized according to AASHTO M111 or M232 as applicable.
10. If base cylinder is recessed into the bottom bearing plate, the thickness of the bottom plate shall be Tb plus the depth of the recess.
11. The Θu values listed in the Design Criteria include the effects of profile grade, maximum factored strength load combination dead and live load rotations, a tolerance rotation of 0.005 rad. and an uncertainty allowance of 0.005 rad.
12. The Contractor shall determine final dimensions of all bearing components including bottom plate, top plate, threaded studs, bolted flange connections, anchor rods, and overall height. The Contractor shall be responsible for verifying bearing heights and adjusting concrete pedestals, if required.

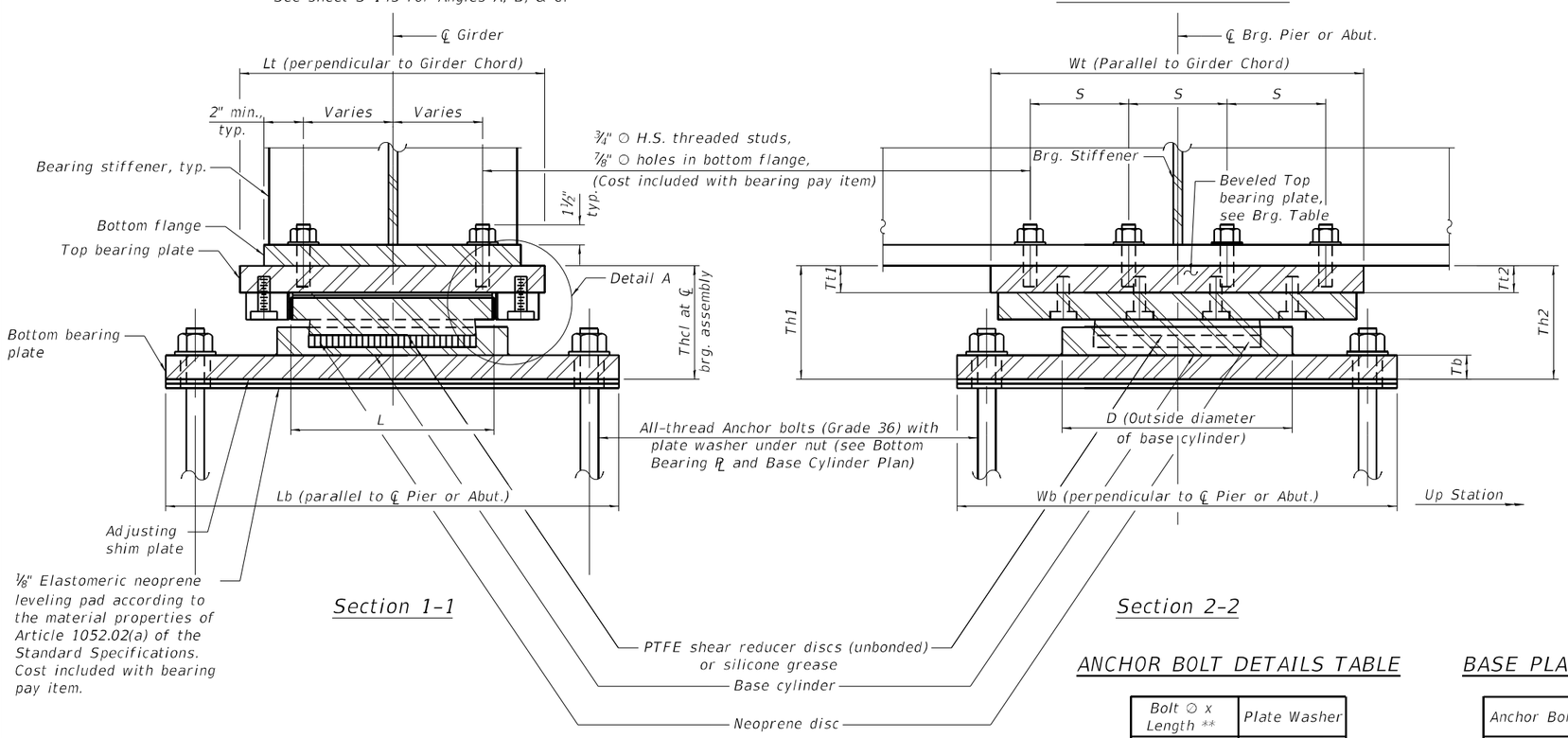

Section 1-1

Section 2-2

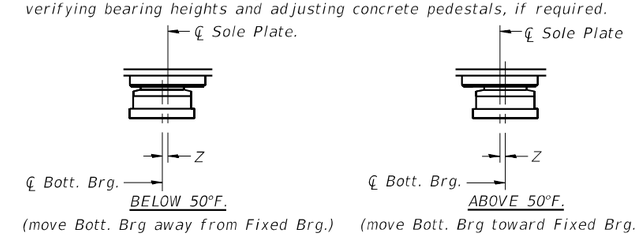

SETTING ANCHOR BOLTS AT EXP. BRG.

Z=⅛" per 100' of expansion for every 15° temp. change from the normal temp. of 50° F.

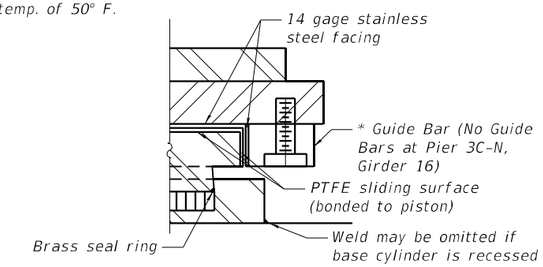

DETAIL A

* As alternates to the bolted connection shown, the guide bars may be connected to the top bearing plate by groove welds or the guide bars and top bearing plate may be fabricated as a single piece.

ANCHOR BOLT DETAILS TABLE

Bolt ∅ x Length **	Plate Washer
1½" x 18"	3" x 3" x 5/16"

**Length shown is minimum required embedment length

BASE PLATE HOLE TABLE

Anchor Bolt ∅	Max. Hole ∅
1½"	2"

Michael Baker INTERNATIONAL
200 W Adams Street
Suite 1800
Chicago, IL 60606
PH: 312.707.8770
FAX: 312.707.8804

USER NAME = DLamb	DESIGNED - AMR	REVISED -	
	CHECKED - JTB	REVISED -	
PLOT SCALE = 0:2.0000 ':" / in.	DRAWN - DMJ	REVISED -	
PLOT DATE = 6/6/2023	CHECKED - JTB	REVISED -	

STATE OF ILLINOIS
DEPARTMENT OF TRANSPORTATION

EXPANSION POT BEARING DETAILS 1
STRUCTURE NO. 090-0182

SHEET S-145 OF S-194 SHEETS

F.A.P. RTE.	SECTION	COUNTY	TOTAL SHEETS	SHEET NO.
VAR.	13 (HVB, HB-3) BR-1;R	TAZEWELL	1173	671
		CONTRACT NO. 68C55		
	ILLINOIS	FED. AID PROJECT		

GUIDED EXPANSION BEARING DESIGN CRITERIA AND DIMENSIONS

Brg. Location	Design Criteria							Quantity	Bottom Bearing Plate				Top Bearing Plate						Th1	Th2	Thcl	L	D	Anchor Bolt Dia.
	Unfactored Vertical Dead Load Reaction (RDC) (kips)	Unfactored Vertical Wearing Surface Reaction (RDW) (kips)	Unfactored Vertical Live Load w/o Impact Reaction (RLL) (kips)	Max. Fact. Strength or Extreme Event Limit State Lateral Design Reaction (Hu) (kips)	Max. Fact. Strength Limit State Design Rotation (u) (rad)	Unfactored Design Thermal Movement from 50° F (ΔT)	Total Required Transverse Movement		Tb	Lb	wb	Et = El	Tt1	Tt2	Lt	wt	S	Threaded Stud Dia.						
Pier 1	404	87	207	140	0.0205	1 3/8"	1/4"	15	2 5/8"	3' - 5"	2' - 10"	2 7/8"	3"	3 5/8"	2' - 5 1/4"	2' - 4 1/2"	8 1/8"	3/4"	14 1/8"	14 3/4"	14 7/16"	1' - 11 5/8"	1' - 11 5/8"	1 1/2"
Pier 3	302	59	155	103	-0.0146	1 1/8"	1/4"	8	2 1/4"	3' - 0"	2' - 6"	2 7/8"	2 5/8"	3 1/8"	2' - 0 1/2"	1' - 11"	6 1/4"	3/4"	9 3/4"	10 1/4"	10"	1' - 7 3/4"	1' - 7 3/4"	1 1/2"
Pier 3C-N *	163	35	115	76	-0.0364	1 1/8"	1/4"	4 *	2 1/8"	3' - 0"	2' - 2"	2 7/8"	2 1/4"	2 1/8"	2' - 0"	2' - 2"	6 1/4"	3/4"	10 3/4"	10 5/8"	10 11/16"	1' - 3 7/8"	1' - 3 7/8"	1 1/2"
Pier 3C-S	73	17	82	80	0.0249	0 5/8"	1/4"	4	1 3/4"	2' - 11"	2' - 0"	2 7/8"	1 3/4"	1 5/8"	1' - 11"	1' - 11 1/2"	5 1/2"	3/4"	9 1/8"	9"	9 1/16"	1' - 0 7/8"	1' - 0 7/8"	1 1/2"
Pier 3D	314	71	190	115	0.0168	1 1/8"	1/4"	4	2 1/2"	3' - 3"	2' - 8"	2 7/8"	3 1/8"	2 7/8"	2' - 3 1/4"	2' - 4"	7 1/2"	3/4"	13 3/8"	13 1/8"	13 1/4"	1' - 9 3/8"	1' - 9 3/8"	1 1/2"
S. Abut. C	79	18	81	91	-0.0265	0 5/8"	1/4"	4	1 3/4"	2' - 11"	2' - 0"	2 7/8"	2 3/8"	1 5/8"	1' - 11"	1' - 11 1/2"	5 1/2"	3/4"	9 3/4"	9"	9 3/8"	1' - 0 7/8"	1' - 0 7/8"	1 1/2"
S. Abut. D	114	26	97	76	-0.0265	2"	1/4"	4	2"	3' - 1"	2' - 1"	2 7/8"	2 3/4"	1 3/4"	1' - 11"	2' - 1"	5 1/2"	3/4"	10 3/8"	9 3/8"	9 7/8"	1' - 0 7/8"	1' - 0 7/8"	1 1/2"

* Provide Non-Guided HLMR Bearing at Pier 3C-N, Girder 16

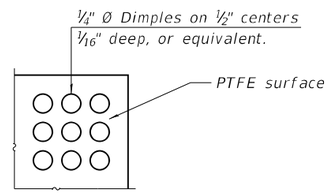

PLAN-PTFE SURFACE

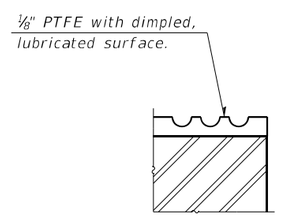

SECTION THRU PTFE

BILL OF MATERIAL

Item	Unit	Total
Anchor Bolts, 1 1/2"	Each	172
High Load Multi-Rotational Bearings, Pot, Non-Guided Expansion-400K	Each	1
High Load Multi-Rotational Bearings, Pot, Guided Expansion-300K	Each	12
High Load Multi-Rotational Bearings, Pot, Guided Expansion-400K	Each	3
High Load Multi-Rotational Bearings, Pot, Guided Expansion-600K	Each	12
High Load Multi-Rotational Bearings, Pot, Guided Expansion-700K	Each	15

Notes:

1. HLMR bearings shall be designed to carry minimum Factored Ultimate (Strength) Design Rotation of 0.02 radians. See Special Provisions.
2. Anchor bolts shall be ASTM F1554 all-thread (or an Engineer-approved alternate material) of the grade(s) and diameter(s) specified. The corresponding specified grade of AASHTO M314 anchor bolts may be used in lieu of ASTM F1554.
3. Work this sheet with sheet S-145.
4. See sheets S-141 thru S-143 for bearing layout and orientation.

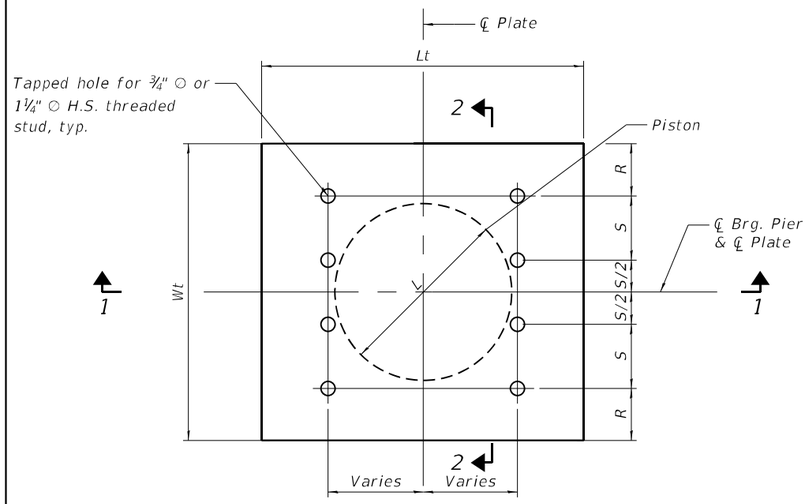

TOP BEARING ℞ AND PISTON PLAN

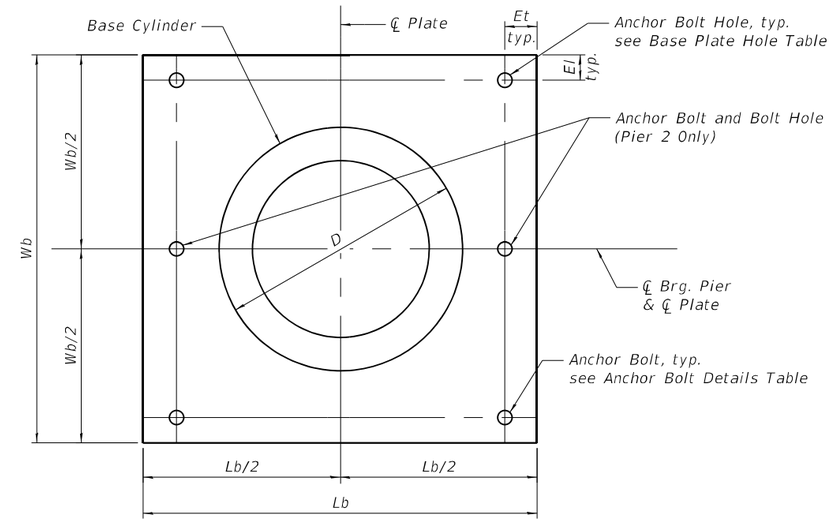

BOTTOM BEARING ℞ AND BASE CYLINDER PLAN

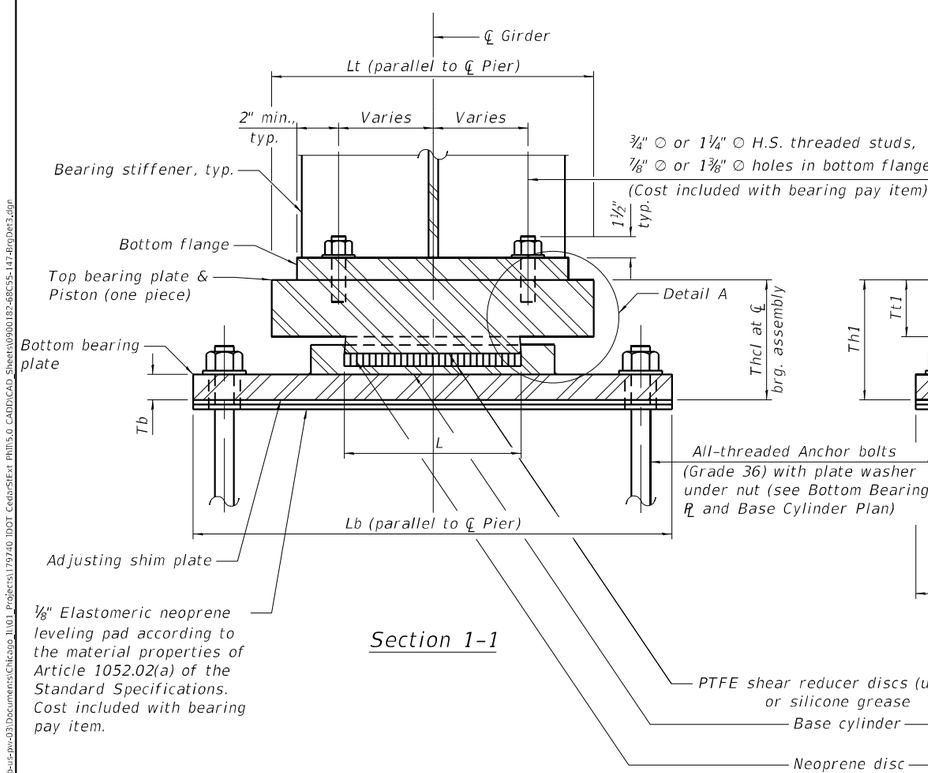

Section 1-1

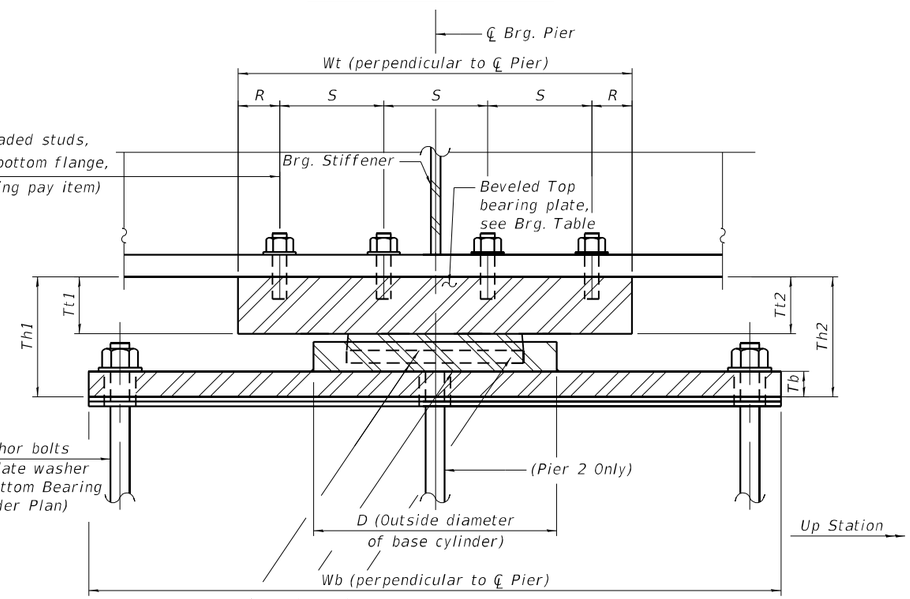

Section 2-2

NOTES:

1. The Structural Steel for the top and bottom bearing plates shall be AASHTO M270 Grade 50.
2. For threaded studs and anchor bolt type and size, see Fixed Bearing Design Criteria and Dimensions Table on sheet S-148.
3. Top & bottom plates, threaded studs, washers, & shim plates are included in the cost of the High Load Multi-Rotational Bearings, Fixed.
4. Anchor bolts for bearings shall be placed in holes drilled in the concrete through holes in the botom bearing plate after members are in place.
5. Drilled and set anchor bolts shall be installed according to Article 521.06 of the Standard Specifications.
6. Two ⅛" adjusting shims shall be provided for each bearing in addition to all other plates or shims and placed as shown on the bearing details. Cost included with bearing pay item.
7. Work this sheet with sheet S-148.
8. All bearing plates, H.S. studs, anchor bolts, nuts, and washers shall be galvanized according to AASHTO M111 or M232 as applicable.
9. If base cylinder is recessed into the bottom bearing plate, the thickness of the bottom plate shall be Tb plus the depth of the recess.
10. The Θu values listed in the Design Criteria include the effects of profile grade, maximum factored strength load combination dead and live load rotations, a tolerance rotation of 0.005 rad. and an uncertainty allowance of 0.005 rad.
11. The Contractor shall determine final dimensions of all bearing components including bottom plate, top plate, threaded studs, bolted flange connections, anchor rods, and overall height. The Contractor shall be responsible for verifying bearing heights and adjusting concrete pedestals, if required.

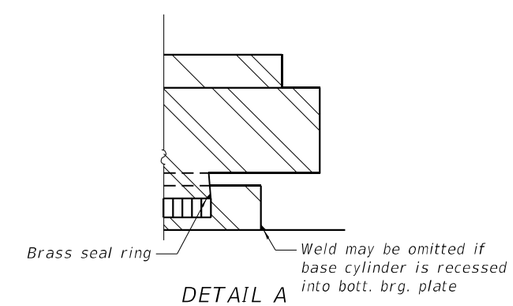

DETAIL A

ANCHOR BOLT DETAILS TABLE

Bolt ∅ x Length **	Plate Washer
1½"x18"	3"x3"x5/16"
2"x24"	3½"x3½"x5/16"

**Length shown is minimum required embedment length

BASE PLATE HOLE TABLE

Anchor Bolt ∅	Max. Hole ∅
1½"	2"
2"	2½"

MODEL: Default
FILE NAME: pw:\\mb-us-pw.bentley.com:mb-us-pw-03\Documents\Chicago_IL\01_Projects\179740_IDOT_Ceda-SIE+_Phll5.0_CADD\CAD_Sheets\0900182-68C55-147-BrgDet3.dgn

Michael Baker INTERNATIONAL
200 W Adams Street
Suite 1800
Chicago, IL 60606
PH: 312.707.8770
FAX: 312.707.8804

USER NAME = DLamb	DESIGNED - AMR	REVISED -	
	CHECKED - JTB	REVISED -	
PLOT SCALE = 0:2.0000 ':" / in.	DRAWN - DMJ	REVISED -	
PLOT DATE = 6/6/2023	CHECKED - JTB	REVISED -	

STATE OF ILLINOIS
DEPARTMENT OF TRANSPORTATION

FIXED POT BEARING DETAILS 1
STRUCTURE NO. 090-0182

SHEET S-147 OF S-194 SHEETS

F.A.P. RTE.	SECTION	COUNTY	TOTAL SHEETS	SHEET NO.
VAR.	13 (HVB, HB-3) 8R-1:R	TAZEWELL	1173	673
		CONTRACT NO. 68C55		
	ILLINOIS	FED. AID PROJECT		

FIXED BEARING DESIGN CRITERIA AND DIMENSIONS

Brg. Location	Design Criteria					Quantity	Bottom Bearing Plate				Top Bearing Plate							Th1	Th2	Thcl	L	D	Anchor Bolt Dia.
	Unfactored Vertical Dead Load Reaction (RDC) (kips)	Unfactored Vertical Wearing Surface Reaction (RDW) (kips)	Unfactored Vertical Live Load w/o Impact Reaction (RLL) (kips)	Max. Fact. Strength or Extreme Event Limit State Lateral Design Reaction (Hu)	Max. Fact. Strength Limit State Design Rotation (θu) (rad)		Tb	Lb	wb	Et = El	Tt1	Tt2	Lt	wt	R	S	Threaded Stud Dia.						
Pier 2	412	89	192	277	0.0107	12	3"	3' - 11"	2' - 10"	3 3/4"	3 1/4"	3 5/8"	2' - 8"	1' - 7"	2"	5"	1 1/4"	10 3/4"	11 1/8"	10 15/16"	1' - 7"	1' - 11 5/8"	2"
Pier 2C	542	111	220	197	0.0110	4	3"	3' - 11"	3' - 1"	3 3/4"	3 5/8"	4 1/8"	2' - 8"	1' - 10"	2"	6"	1 1/4"	12"	12 1/2"	12 1/4"	1' - 10"	2' - 2 3/4"	2"
Pier 4C	220	49	122	113	-0.0101	4	2 1/4"	3' - 2"	2' - 5"	2 7/8"	2 7/8"	2 1/2"	2' - 2"	1' - 3 1/2"	2 1/8"	3 3/4"	3/4"	9"	8 5/8"	8 13/16"	1' - 2 3/8"	1' - 6 3/8"	1 1/2"

BILL OF MATERIAL

Item	Unit	Total
Anchor Bolts, 1 1/2"	Each	16
Anchor Bolts, 2"	Each	88
High Load Multi-Rotational Bearings, Pot, Fixed-500K	Each	4
High Load Multi-Rotational Bearings, Pot, Fixed-700K	Each	12
High Load Multi-Rotational Bearings, Pot, Fixed-900K	Each	4

Notes:

1. HLMR bearings shall be designed to carry minimum Factored Ultimate (Strength) Design Rotation of 0.02 radians. See Special Provisions.

2. Anchor bolts shall be ASTM F1554 all-thread (or an Engineer-approved alternate material) of the grade(s) and diameter(s) specified. The corresponding specified grade of AASHTO M314 anchor bolts may be used in lieu of ASTM F1554.

3. Work this sheet with sheet S-147.

4. See sheets S-141 thru S-143 for bearing layout and orientation.

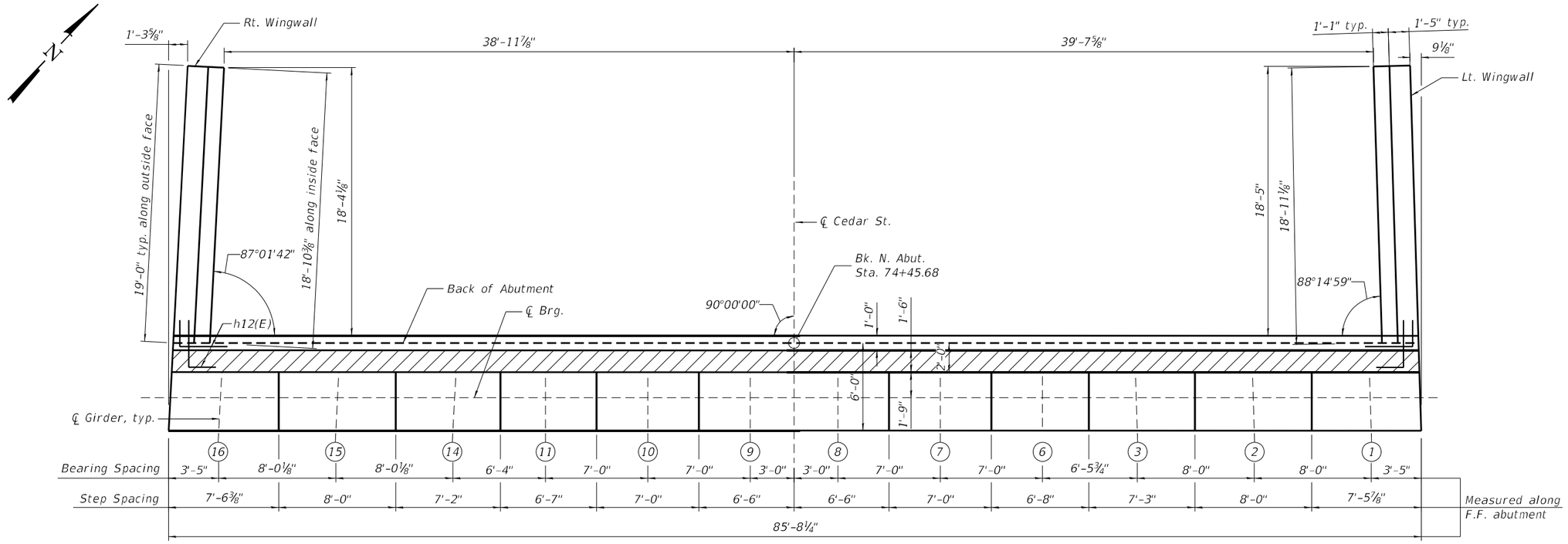

TOP VIEW

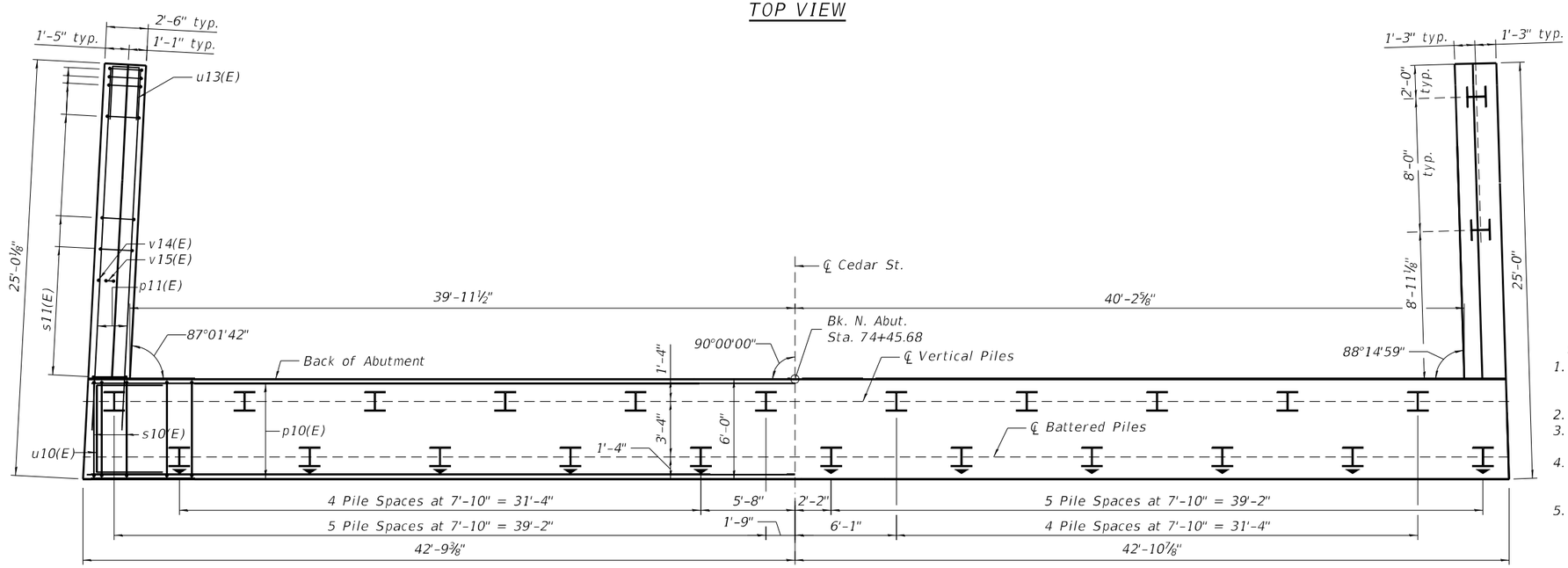

PLAN - PILE CAP

N. ABUT. PILE DATA:

Type: HP12x53
Nominal Required Bearing: 418 kips
Factored Resistance Available: 230 kips
Est. Length: 62 feet
No. Production Piles: 25
No. Test Piles: 1

NOTES:

1. Hatched area to be poured after superstructure false work has been removed. Quantity of concrete included with Concrete Superstructure.
2. Pour steps monolithically with cap.
3. For Concrete Encasement and pile details, see sheet S-178.
4. Equipment and storage of material shall not be placed within 6 ft of abutment or wingwalls prior to placement of approach slab.
5. The 2" PJF shall be included with the cost of Concrete Structures. The PJF should be per Article 1051.09 of the standard specifications, and bonded to wingwall with suitable adhesive as recommended by supplier.
6. b14(E), c10(E), d11(E) bars in the median and parapet above the paving block included with the approach slab bill of material, see sheets S-79 & S-80.
7. For Sections see sheet S-151.

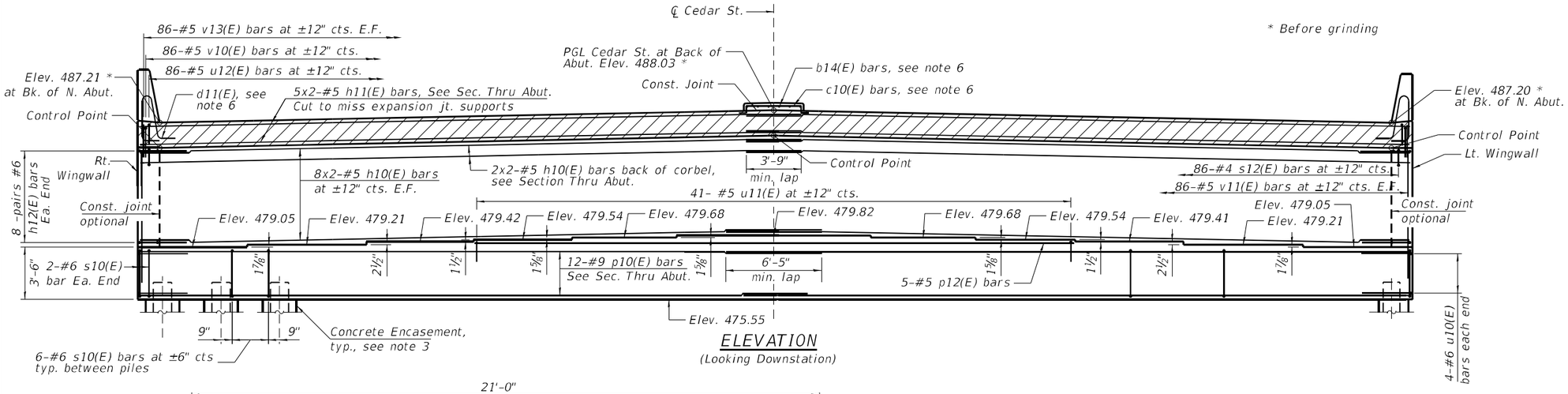

ELEVATION
(Looking Downstation)

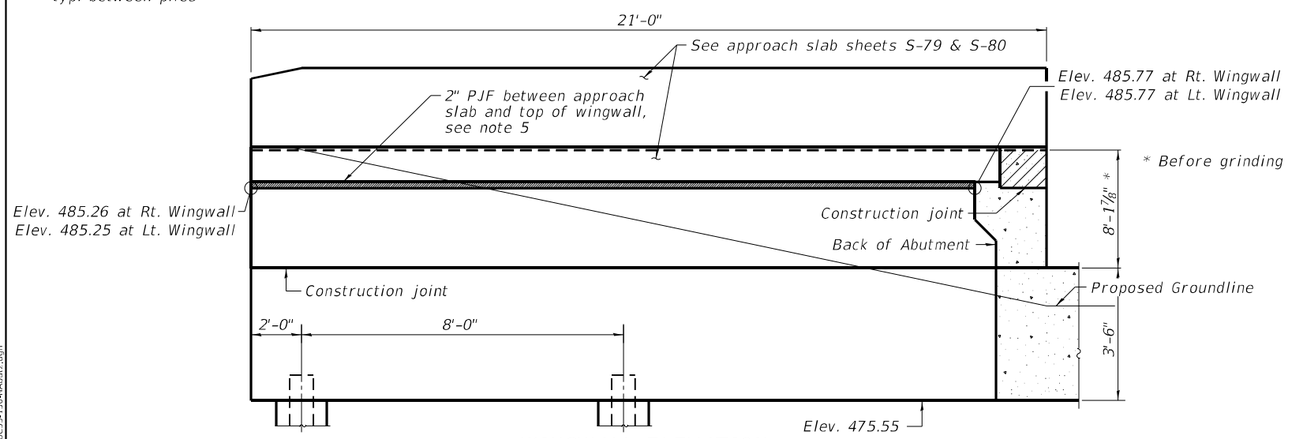

WINGWALL ELEVATION
(Lt. Wingwall dimensions shown)
(Rt. Wingwall similar)

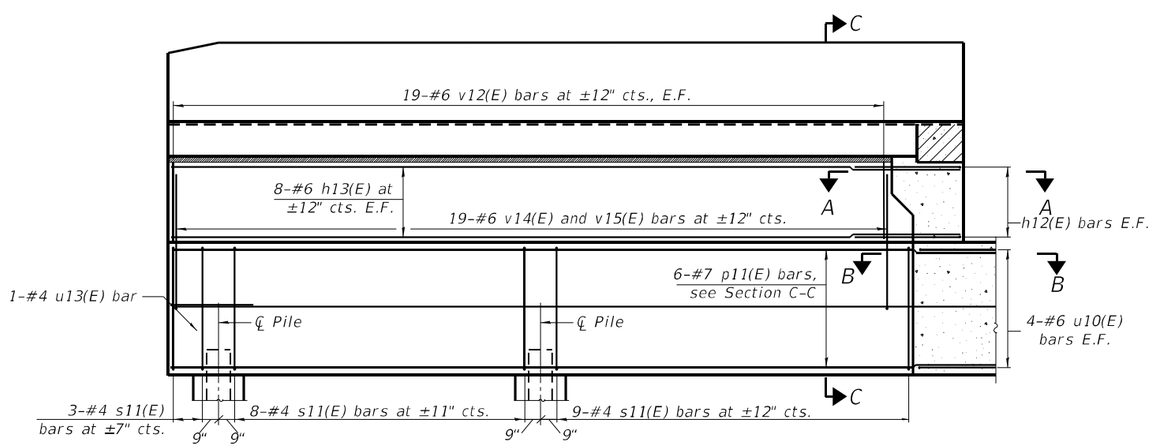

WINGWALL ELEVATION
(Lt. Wingwall reinforcement shown)
(Rt. Wingwall similar)

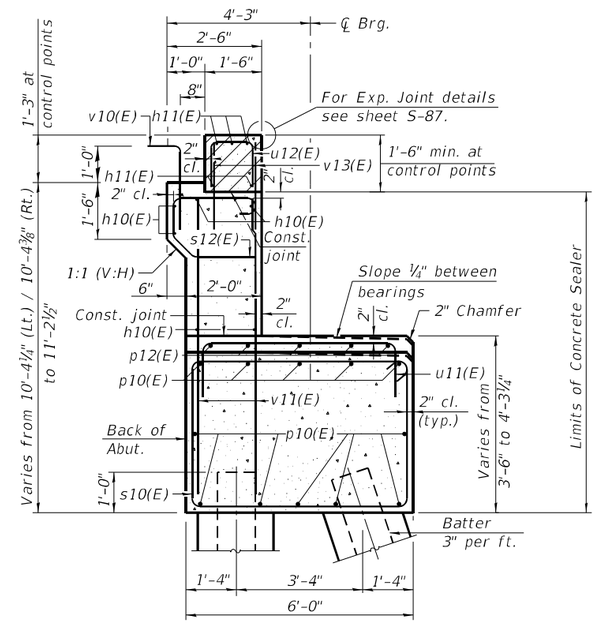

SECTION THRU PILE SUPPORTED NORTH ABUT.

NOTES:

1. See sheet S-149 for typical notes.

MODEL: Default
FILE NAME: pw:\\mbs-uscov.bentley.com:mbs-uscov-03\Documents\Chicago IL\01 Projects\179740 IDOT Ceda/SHEet PRJ15.0 CADD\CAD Sheets\0900182-68C55-150-NAbut2.dgn

Michael Baker INTERNATIONAL
200 W Adams Street
Suite 1800
Chicago, IL 60606
P:+1 312.707.8770
FAX: 312.707.8804

USER NAME = DLamb	DESIGNED - EML/XW	REVISED -	
	CHECKED - PAT/AMR	REVISED -	
PLOT SCALE = 0:2.0000 ':" / in.	DRAWN - EML/XW	REVISED -	
PLOT DATE = 6/6/2023	CHECKED - JTB	REVISED -	

STATE OF ILLINOIS
DEPARTMENT OF TRANSPORTATION

NORTH ABUTMENT SECTIONS & DETAILS 1
STRUCTURE NO. 090-0182

SHEET S-150 OF S-194 SHEETS

F.A.P. RTE.	SECTION	COUNTY	TOTAL SHEETS	SHEET NO.
VAR.	13 (HVB, HB-3) BR-1;R	TAZEWELL	1173	676
		CONTRACT NO. 68C55		
	ILLINOIS	FED. AID PROJECT		

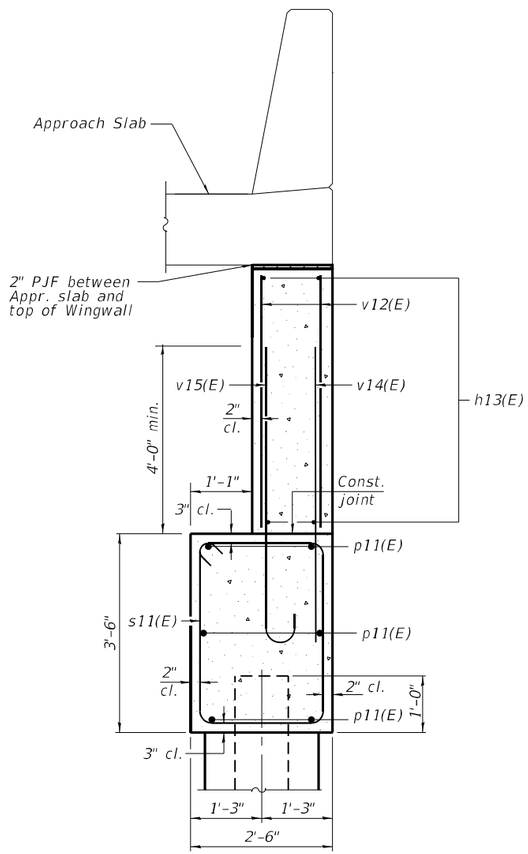

SECTION C-C

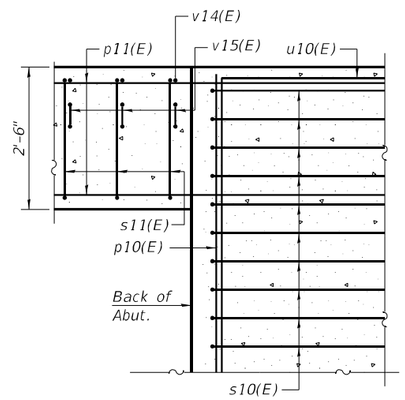

SECTION B-B

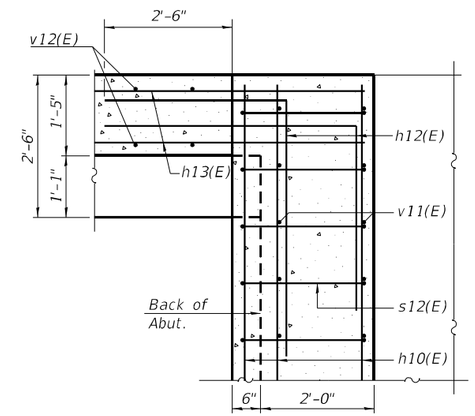

SECTION A-A

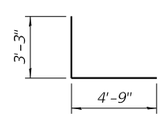

BAR h12(E)

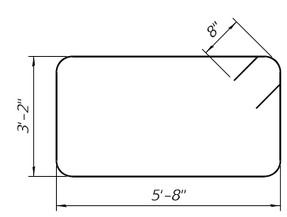

BAR s10(E)

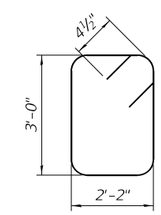

BAR s11(E)

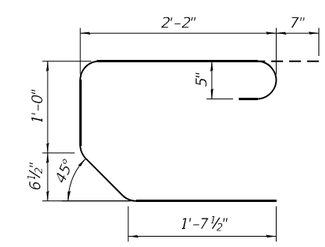

BAR s12(E)

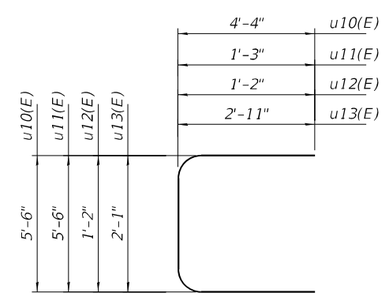

BAR u10(E), u11(E), u12(E), u13(E)

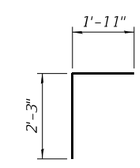

BAR v10(E)

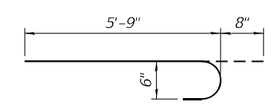

BAR v15(E)

NORTH ABUTMENT BILL OF MATERIAL

Bar	No.	Size	Length	Shape
h10(E)	36	#5	44'-5"	
h11(E)	10	#5	44'-5"	
h12(E)	32	#6	8'-0"	
h13(E)	32	#6	20'-8"	
p10(E)	24	#9	45'-11"	
p11(E)	12	#7	22'-8"	
p12(E)	5	#5	39'-11"	
s10(E)	130	#6	19'-0"	
s11(E)	32	#4	11'-1"	
s12(E)	86	#5	6'-2"	
u10(E)	8	#6	14'-2"	
u11(E)	41	#5	8'-0"	
u12(E)	86	#5	3'-6"	
u13(E)	2	#4	7'-11"	
v10(E)	86	#5	4'-2"	
v11(E)	172	#5	9'-9"	
v12(E)	76	#6	6'-4"	
v13(E)	172	#5	2'-4"	
v14(E)	38	#6	5'-9"	
v15(E)	38	#6	6'-5"	
Structure Excavation		Cu. Yd.	385	
Concrete Structures		Cu. Yd.	144.6	
Concrete Superstructure		Cu. Yd.	7.2	
Concrete Encasement		Cu. Yd.	9.1	
Reinforcement Bars, Epoxy Coated		Pound	17,320	
Furnishing Steel Piles HP12x53		Foot	1,550	
Driving Piles		Foot	1,550	
Test Pile Steel HP12x53		Each	1	
Pile Shoes		Each	26	
Granular Backfill for Structures		Cu. Yd.	261	
Concrete Sealer		Sq. Ft.	1,269	
Geocomposite Wall Drain		Sq. Yd.	103	
Pipe Underdrains for Structures 4"		Foot	111	

NOTES:

1. See sheet S-149 for typical notes.

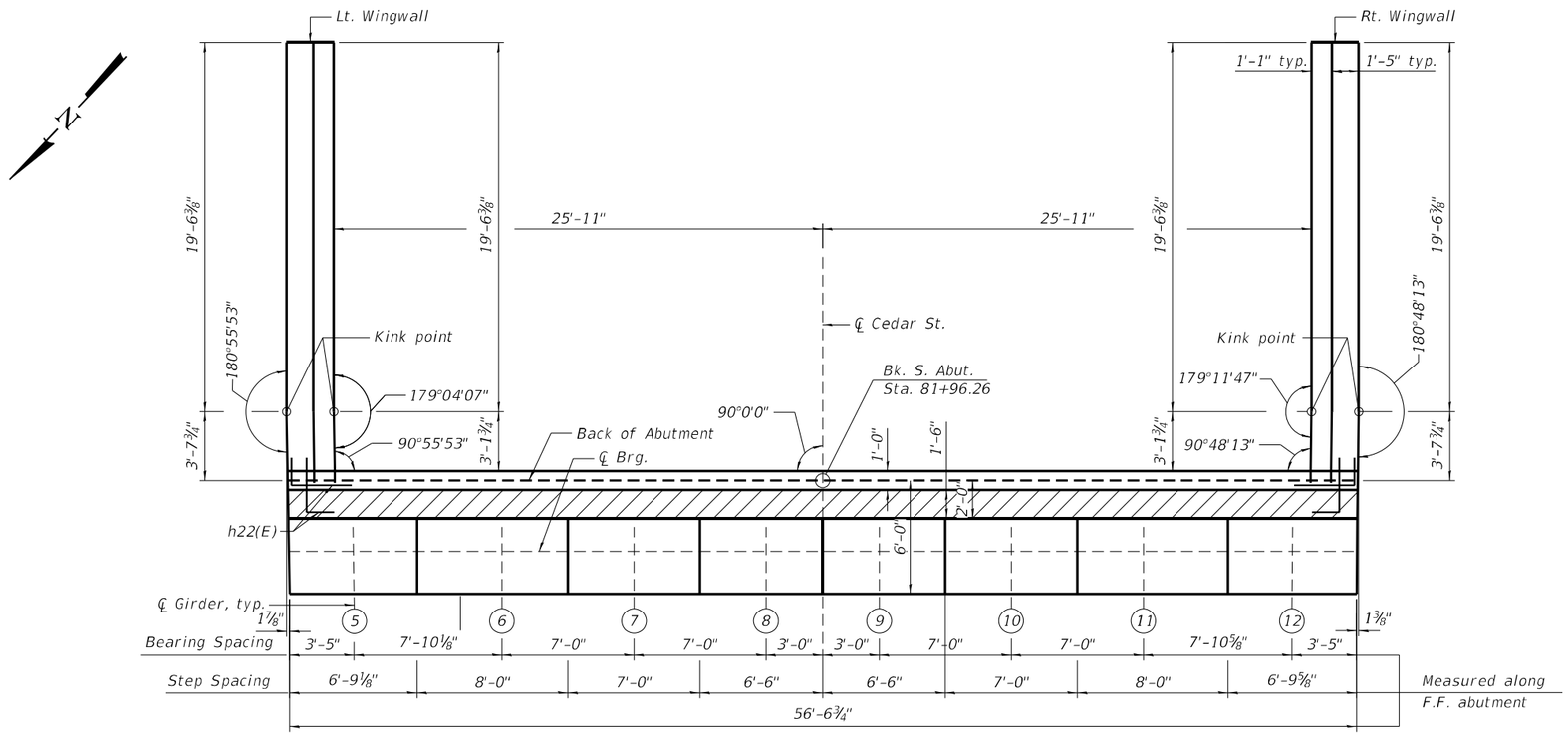

TOP VIEW

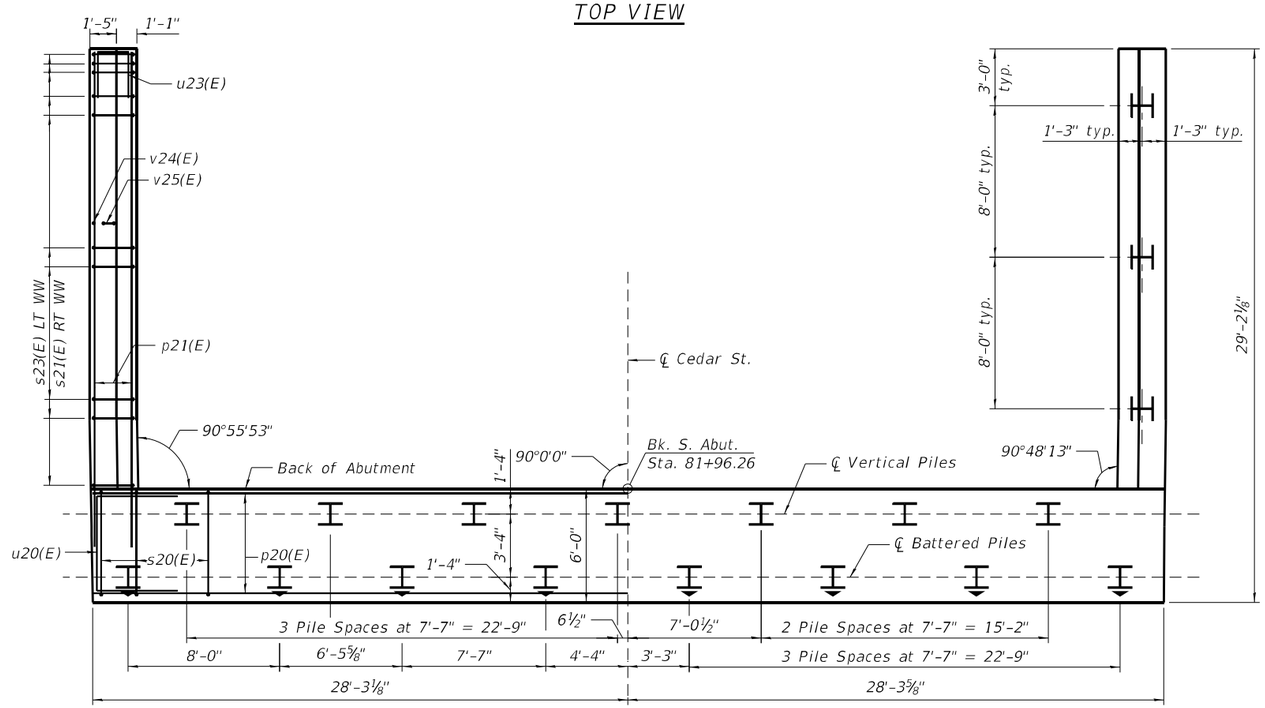

PLAN - PILE CAP

S. ABUT. PILE DATA:

Type: HP12x53
Nominal Required Bearing: 418 kips
Factored Resistance Available: 230 kips
Est. Length: 62 feet
No. Production Piles: 20
No. Test Piles: 1

NOTES:

1. Hatched area to be poured after superstructure false work has been removed. Quantity of concrete included with Concrete Superstructure.
2. Pour steps monolithically with cap.
3. For Concrete Encasement and pile details, see sheet S-178.
4. Equipment and storage of material shall not be placed within 6 ft of abutment or wingwalls prior to placement of approach slab.
5. The 2" PJF shall be included with the cost of Concrete Structures. The PJF should be per Article 1051.09 of the standard specifications, and bonded to wingwall with suitable adhesive as recommended by supplier.
6. b22(E), c20(E), d21(E) bars in the median and parapet above the paving block included with the approach slab bill of material, see sheets S-81 & S-82.
7. For Sections see sheet S-154.
8. Piles spaced to miss existing piles. Contractor to verify location of existing piles prior to driving piles.

Michael Baker INTERNATIONAL
200 W Adams Street
Suite 1800
Chicago, IL 60606
PH: 312.707.8700
FAX: 312.707.8804

USER NAME = Jaime.Rivera	DESIGNED - EML/XW	REVISED -
	CHECKED - PAT/AMR	REVISED -
PLOT SCALE = 0:2.0000 ':" / in.	DRAWN - XW/JTB	REVISED -
PLOT DATE = 5/1/2025	CHECKED - JMK	REVISED -

STATE OF ILLINOIS
DEPARTMENT OF TRANSPORTATION

SOUTH ABUTMENT PLAN & ELEVATION
STRUCTURE NO. 090-0182

SHEET S-152 OF S-194 SHEETS

F.A.P. RTE.	SECTION	COUNTY	TOTAL SHEETS	SHEET NO.
VAR.	13 (HVB, HB-3) BR-1;R	TAZEWELL	1173	678
		CONTRACT NO. 68C55		
		ILLINOIS FED. AID PROJECT		

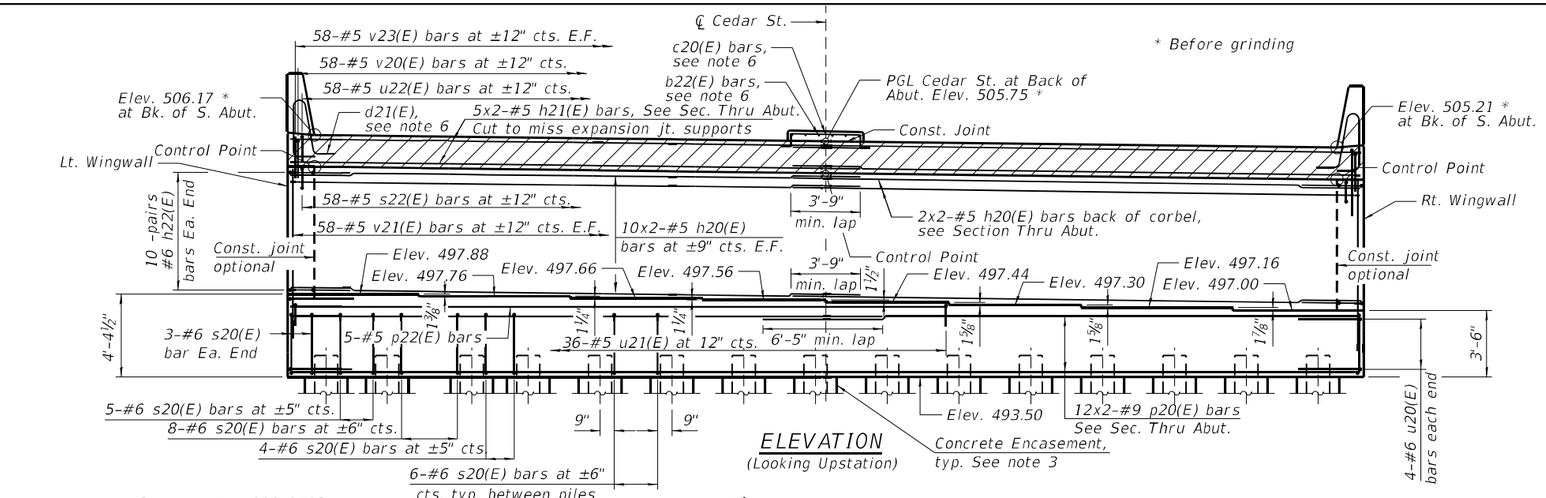

ELEVATION
(Looking Upstation)

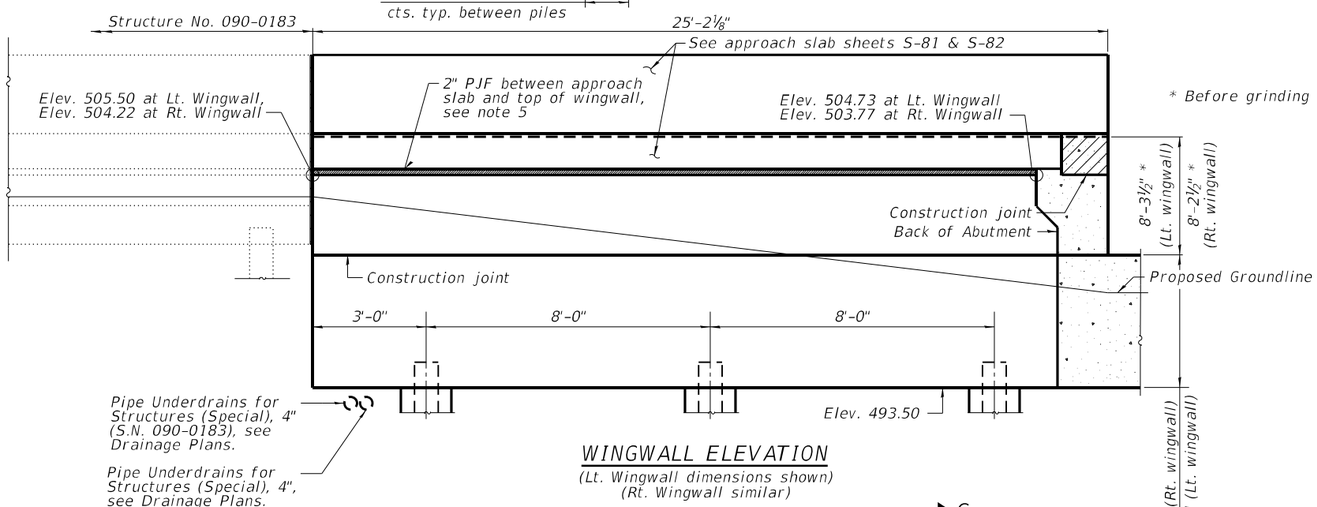

WINGWALL ELEVATION
(Lt. Wingwall dimensions shown)
(Rt. Wingwall similar)

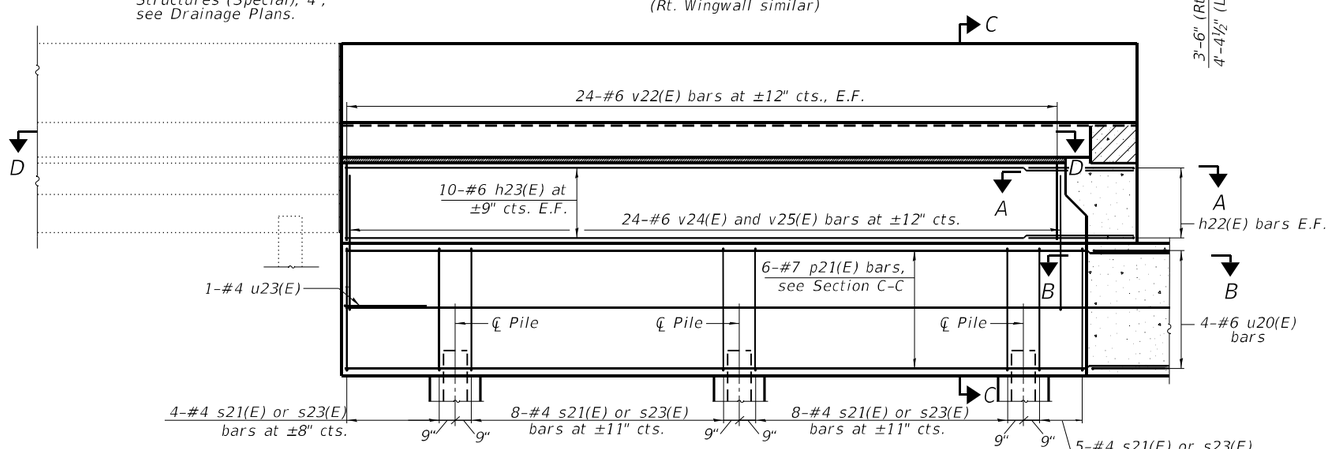

WINGWALL ELEVATION
(Lt. Wingwall reinforcement shown)
(Rt. Wingwall similar)

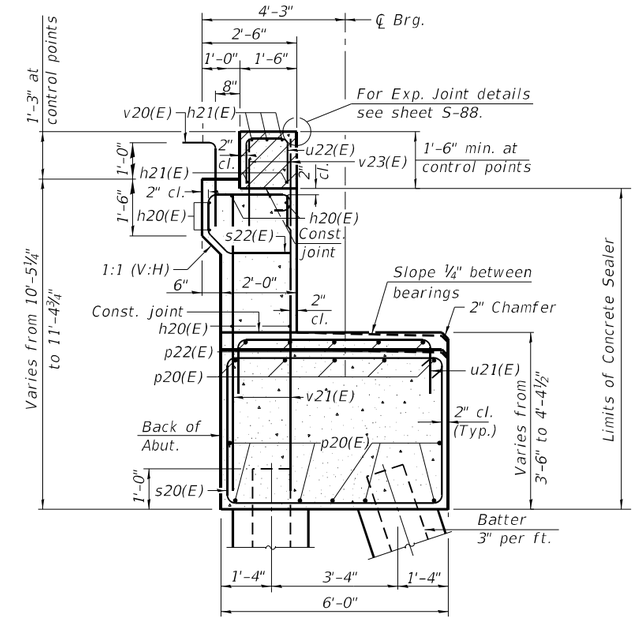

SECTION THRU PILE SUPPORTED SOUTH ABUT.

NOTES:

1. See sheet S-152 for typical notes.

MODEL: Default
FILE NAME: pw:\\mbs-us-pw.bentley.com:mbs-us-pw-03\Documents\Chicago_IL\01 Projects\179740 IDOT Cedar\SE\4 PhII\5.0 CADD\CAD_Sheets\090183-68C55-153-SAbut2.dgn

Michael Baker INTERNATIONAL 200 W Adams Street Suite 1800 Chicago, IL 60606 PH: 312.707.8772 FAX: 312.707.8804	USER NAME = DLamb	DESIGNED - EML/XW	REVISED -	STATE OF ILLINOIS DEPARTMENT OF TRANSPORTATION	SOUTH ABUTMENT SECTIONS & DETAILS 1 STRUCTURE NO. 090-0182
		CHECKED - PAT/AMR	REVISED -		
	PLOT SCALE = 0:2.0000 ':" / in.	DRAWN - XW/JTB	REVISED -		
	PLOT DATE = 8/6/2023	CHECKED - JMK	REVISED -		SHEET S-153 OF S-194 SHEETS

F.A.P. RTE.	SECTION	COUNTY	TOTAL SHEETS	SHEET NO.
VAR.	13 (HVB, HB-3) BR-1;R	TAZEWELL	1173	679
		CONTRACT NO. 68C55		
	ILLINOIS	FED. AID PROJECT		

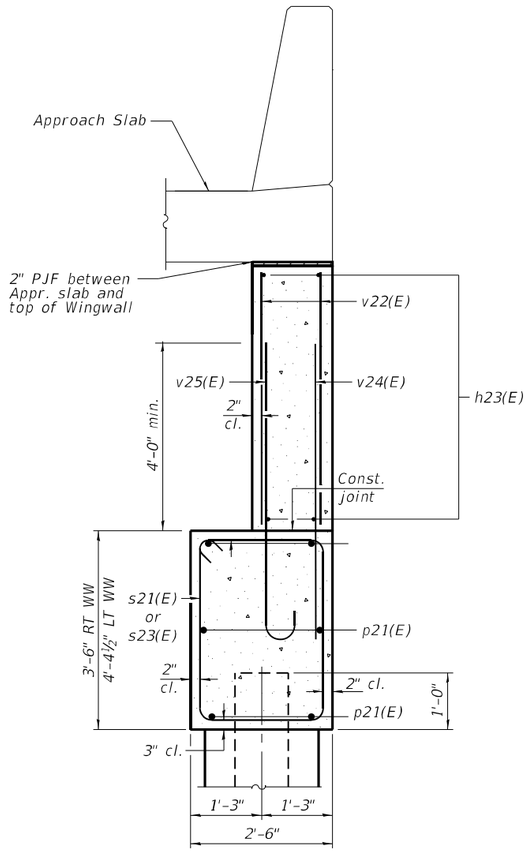

SECTION C-C

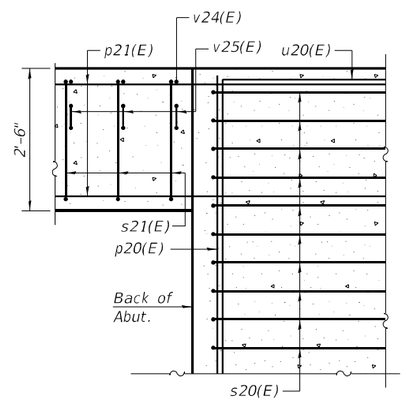

SECTION B-B

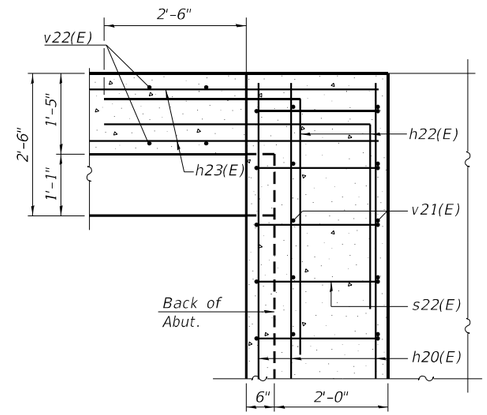

SECTION A-A

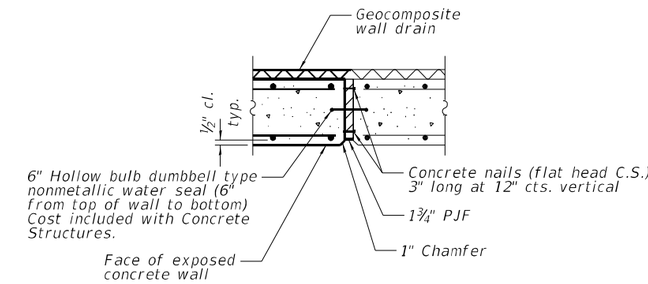

EXPANSION JOINT DETAIL

See Note 2

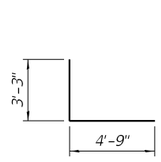

BAR h22(E)

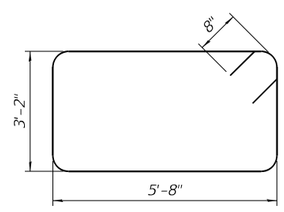

BAR s20(E)

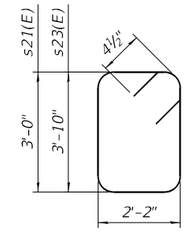

BAR s21(E), s23(E)

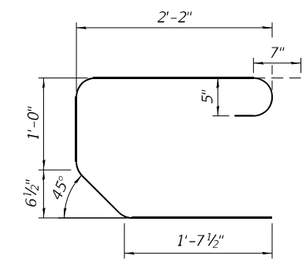

BAR s22(E)

SOUTH ABUTMENT BILL OF MATERIAL

Bar	No.	Size	Length	Shape
h20(E)	44	#5	30'-1"	
h21(E)	10	#5	30'-1"	
h22(E)	40	#6	8'-0"	
h23(E)	40	#6	24'-10"	
p20(E)	24	#9	31'-5"	
p21(E)	12	#7	26'-11"	
p22(E)	5	#5	34'-5"	
s20(E)	89	#6	19'-0"	
s21(E)	25	#4	11'-1"	
s22(E)	58	#5	6'-2"	
s23(E)	25	#4	12'-9"	
u20(E)	8	#6	14'-2"	
u21(E)	36	#5	8'-0"	
u22(E)	58	#5	3'-6"	
u23(E)	2	#4	7'-11"	
v20(E)	58	#5	4'-2"	
v21(E)	116	#5	9'-9"	
v22(E)	96	#6	6'-5"	
v23(E)	116	#5	2'-4"	
v24(E)	48	#6	6'-3"	
v25(E)	48	#6	6'-11"	
Structure Excavation			Cu. Yd.	302
Concrete Structures			Cu. Yd.	113.3
Concrete Superstructure			Cu. Yd.	4.8
Concrete Encasement			Cu. Yd.	7.4
Reinforcement Bars, Epoxy Coated			Pound	14,670
Furnishing Steel Piles HP12x53			Foot	1,240
Driving Piles			Foot	1,240
Test Pile Steel HP12x53			Each	1
Pile Shoes			Each	21
Granular Backfill for Structures			Cu. Yd.	170
Concrete Sealer			Sq. Ft.	838
Geocomposite Wall Drain			Sq. Yd.	134
Pipe Underdrains for Structures 4"			Foot	91

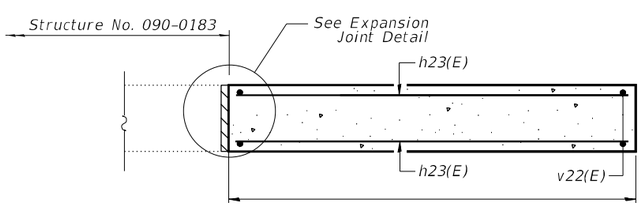

SECTION D-D

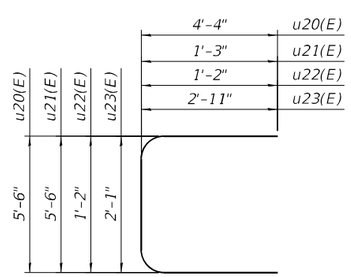

BAR u20(E), u21(E), u22(E), u23(E)

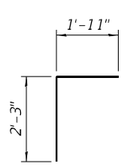

BAR v20(E)

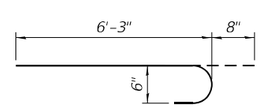

BAR v25(E)

NOTES:

1. See sheet S-152 for typical notes.
2. Wingwall expansion joint cost included with Concrete Structures.

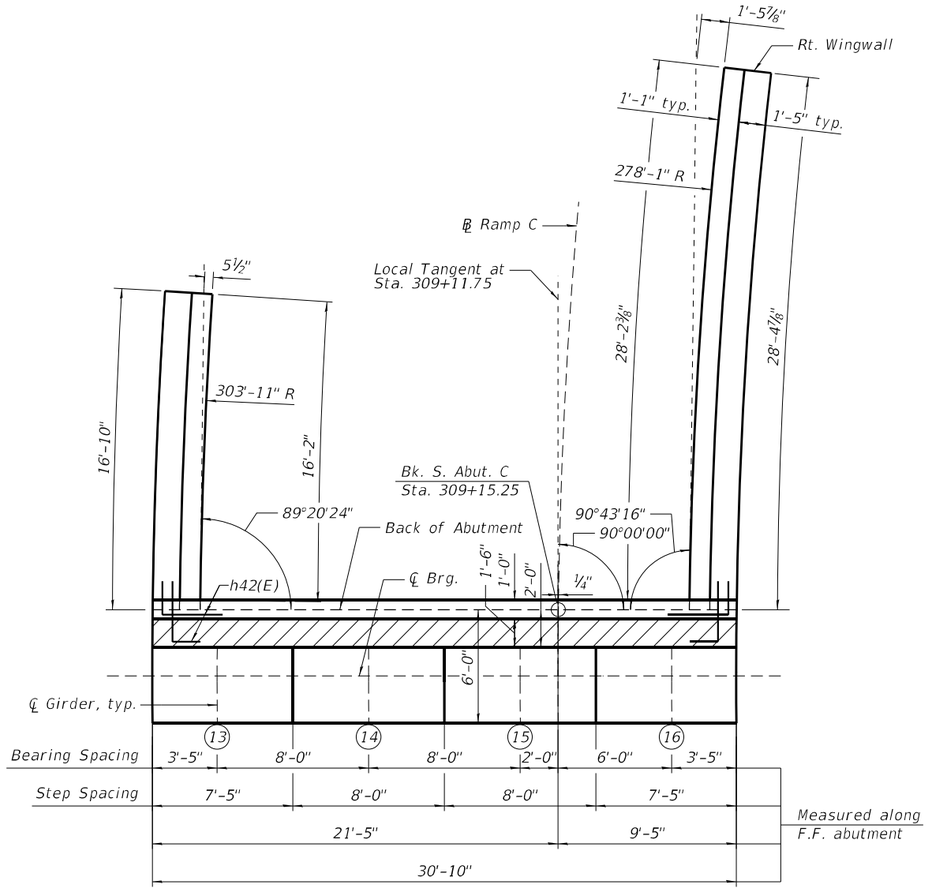

TOP VIEW

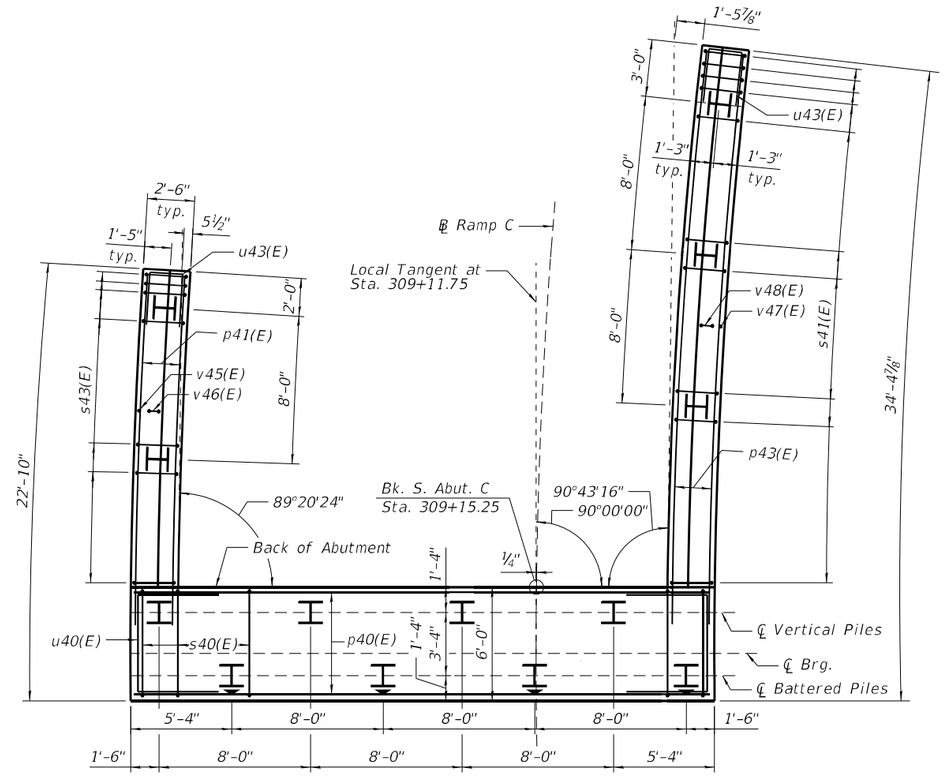

PLAN - PILE CAP

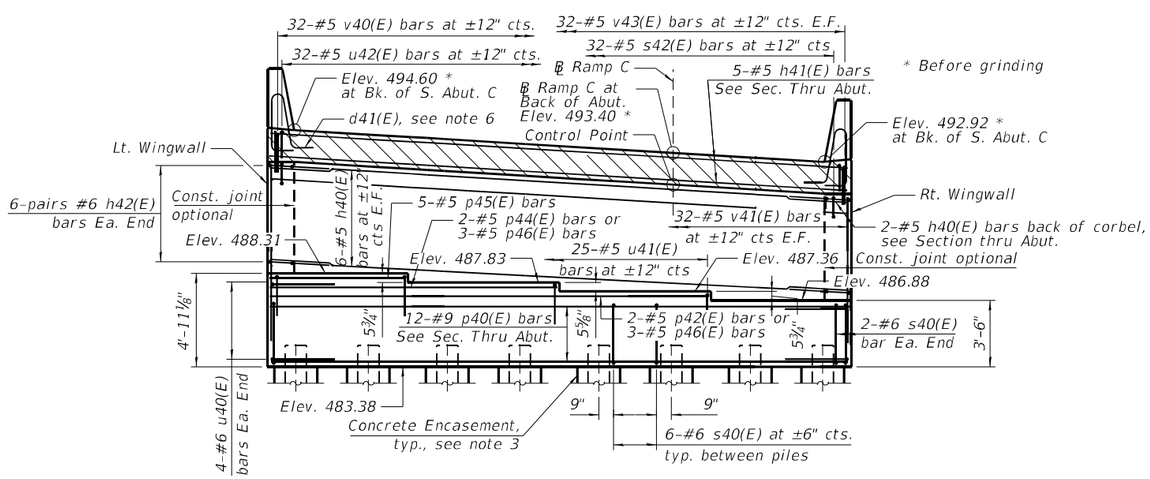

ELEVATION

(Looking Upstation)

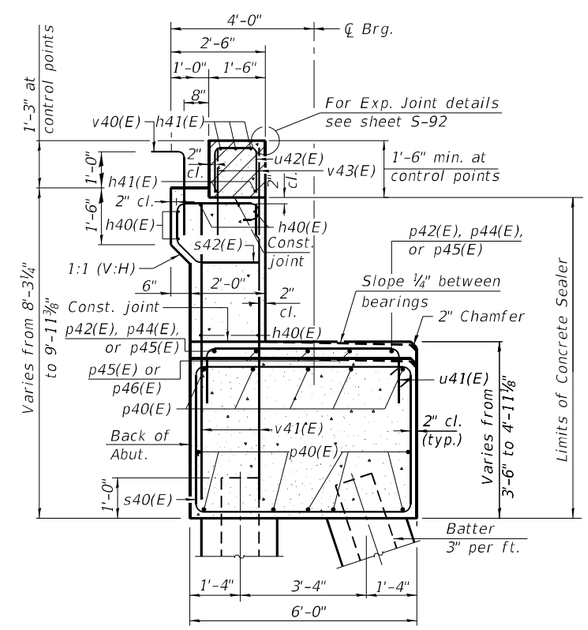

SECTION THRU PILE SUPPORTED SOUTH ABUT. C

S. ABUT. C PILE DATA:

Type: HP12x53
Nominal Required Bearing: 418 kips
Factored Resistance Available: 230 kips
Est. Length: 49 feet
No. Production Piles: 12
No. Test Piles: 1

NOTES:

1. Hatched area to be poured after superstructure false work has been removed. Quantity of concrete included with Concrete Superstructure.
2. Pour steps monolithically with cap.
3. For Concrete Encasement and pile details, see sheet S-178.
4. Equipment and storage of material shall not be placed within 6 ft of abutment or wingwalls prior to placement of approach slab.
5. The 2" PJF shall be included with the cost of Concrete Structures. The PJF should be per Article 1051.09 of the standard specifications, and bonded to wingwall with suitable adhesive as recommended by supplier.
6. d41(E) bars in the parapet above the paving block included with the approach slab bill of material, see sheets S-83 & S-84.
7. For Sections see sheet S-157.

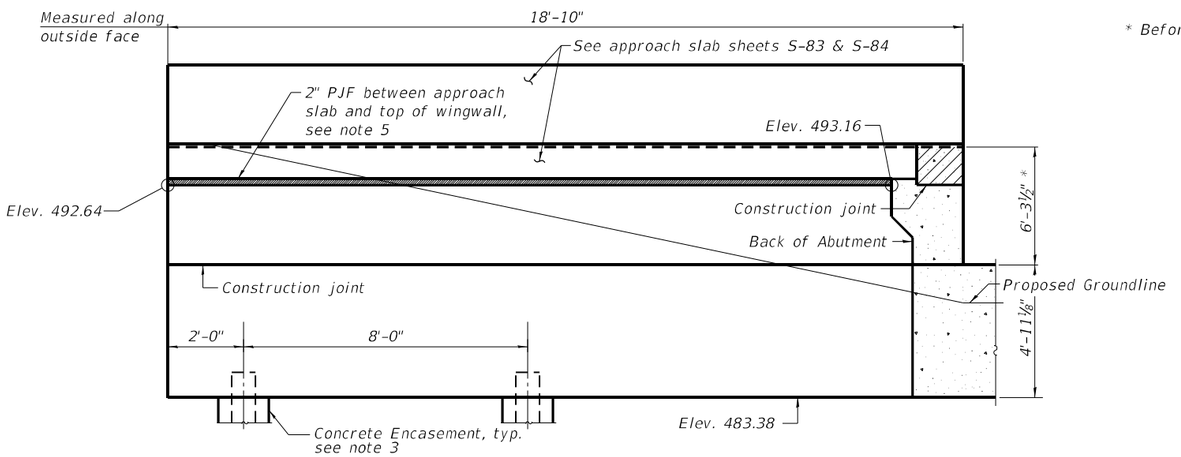

LT WINGWALL ELEVATION
(Showing dimensions)

* Before grinding

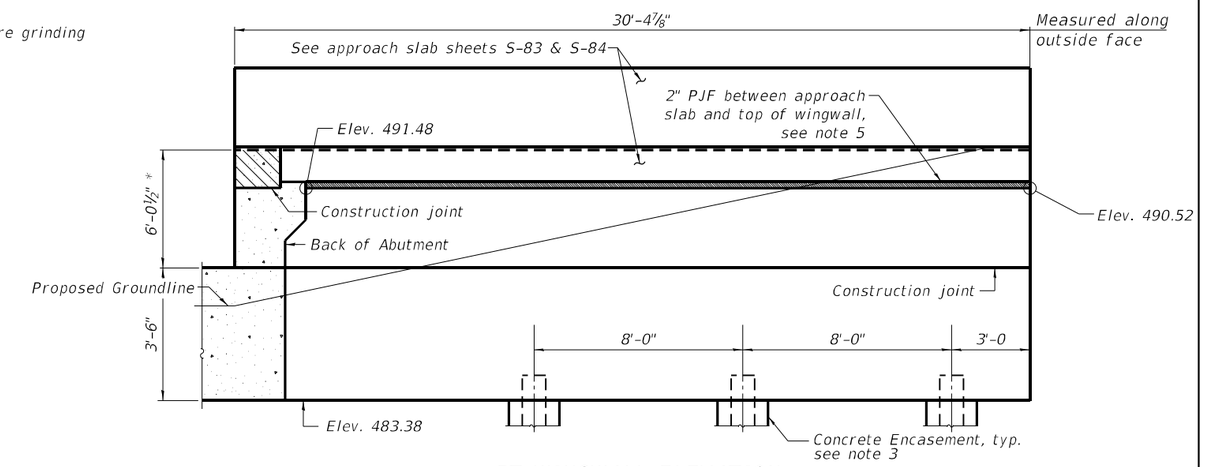

RT WINGWALL ELEVATION
(Showing dimensions)

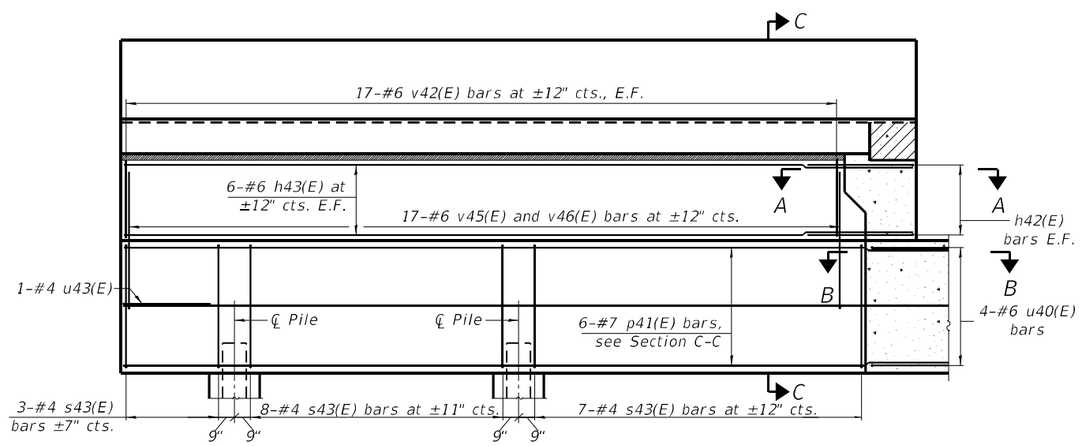

LT WINGWALL ELEVATION
(Showing reinforcement)

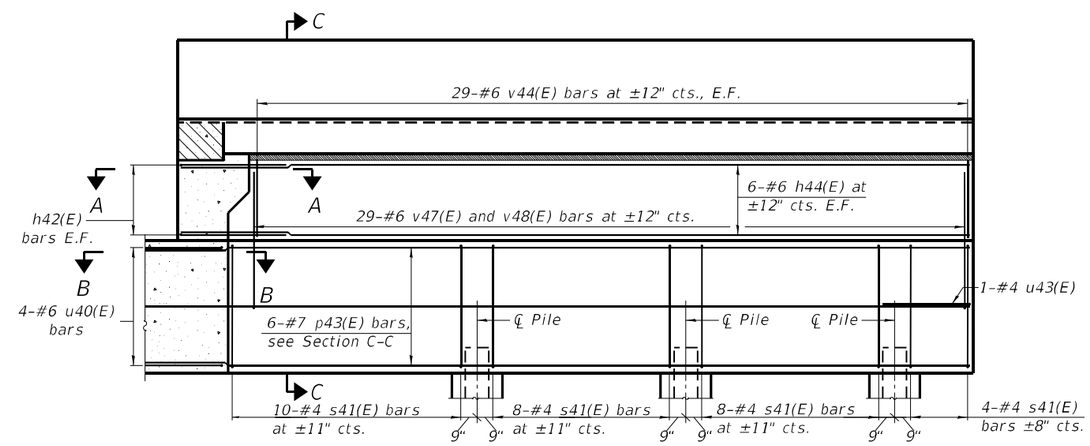

RT WINGWALL ELEVATION
(Showing reinforcement)

NOTES:

1. See sheet S-155 for typical notes.

Michael Baker INTERNATIONAL
200 W Adams Street
Suite 1800
Chicago, IL 60606
P: 312.707.8970
FAX: 312.707.8804

USER NAME = DLamb	DESIGNED - EML/XW	REVISED -	
	CHECKED - PAT/AMR	REVISED -	
PLOT SCALE = 0:2.0000 ':" / in.	DRAWN - XW/JTB	REVISED -	
PLOT DATE = 6/6/2023	CHECKED - JMK	REVISED -	

STATE OF ILLINOIS
DEPARTMENT OF TRANSPORTATION

SOUTH ABUTMENT C SECTIONS & DETAILS 1
STRUCTURE NO. 090-0182

SHEET S-156 OF S-194 SHEETS

F.A.P. RTE.	SECTION	COUNTY	TOTAL SHEETS	SHEET NO.
VAR.	13 (HVB, HB-3) 8R-1;R	TAZEWELL	1173	682
		CONTRACT NO. 68C55		
	ILLINOIS	FED. AID PROJECT		

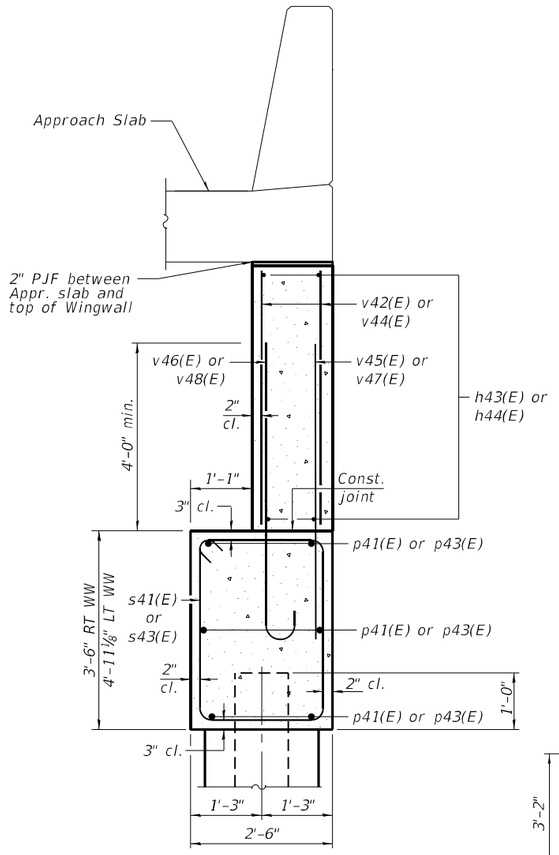

SECTION C-C

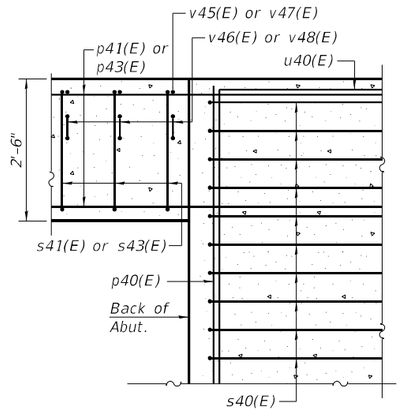

SECTION B-B

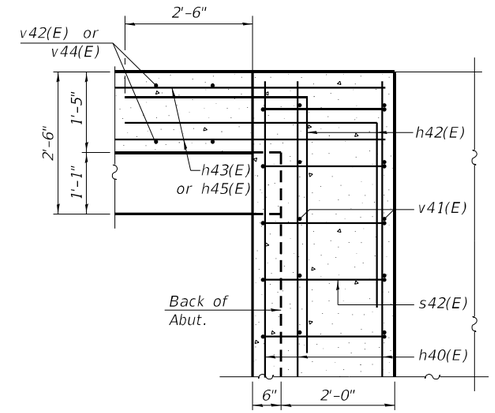

SECTION A-A

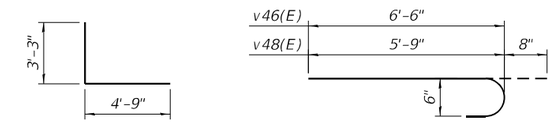

BAR h42(E)

BAR v46(E), v48(E)

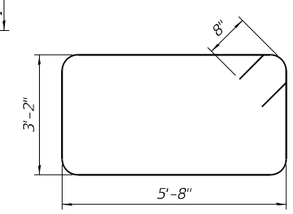

BAR s40(E)

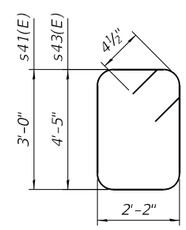

BAR s41(E), s43(E)

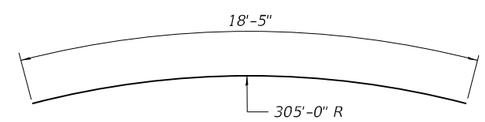

BAR h43(E)

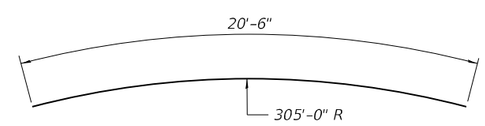

BAR p41(E) and h44(E)

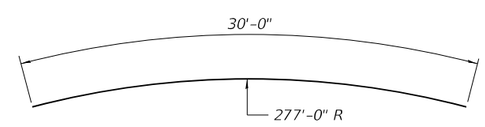

BAR h45(E)

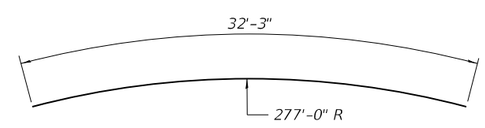

BAR p43(E) and h46(E)

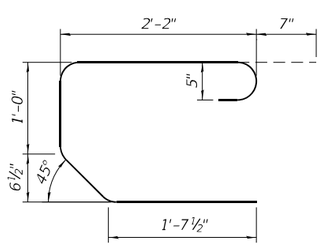

BAR s42(E)

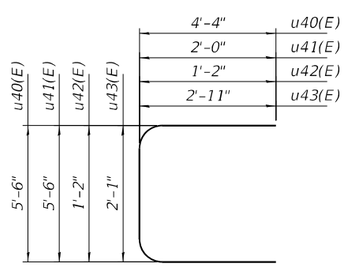

BAR u40(E), u41(E), u42(E), u42(E)

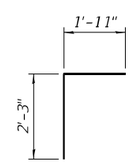

BAR v40(E)

SOUTH ABUTMENT C BILL OF MATERIAL

Bar	No.	Size	Length	Shape
h40(E)	14	#5	30'-6"	
h41(E)	5	#5	30'-6"	
h42(E)	24	#6	8'-0"	
h43(E)	12	#6	18'-5"	
h44(E)	12	#6	30'-0"	
p40(E)	12	#9	30'-6"	
p41(E)	6	#7	20'-6"	
p42(E)	2	#5	23'-1"	
p43(E)	6	#7	32'-3"	
p44(E)	2	#5	15'-1"	
p45(E)	5	#5	7'-1"	
p46(E)	6	#5	7'-8"	
s40(E)	46	#6	19'-0"	
s41(E)	30	#4	11'-1"	
s42(E)	32	#5	6'-2"	
s43(E)	18	#4	13'-11"	
u40(E)	8	#6	14'-2"	
u41(E)	25	#5	9'-6"	
u42(E)	32	#5	3'-6"	
u43(E)	2	#4	7'-11"	
v40(E)	32	#5	4'-2"	
v41(E)	64	#5	7'-8"	
v42(E)	34	#6	4'-6"	
v43(E)	64	#5	2'-4"	
v44(E)	58	#6	4'-3"	
v45(E)	17	#6	6'-6"	
v46(E)	17	#6	7'-2"	
v47(E)	29	#6	5'-9"	
v48(E)	29	#6	6'-5"	
Structure Excavation		Cu. Yd.	101	
Concrete Structures		Cu. Yd.	66.7	
Concrete Superstructure		Cu. Yd.	2.6	
Concrete Encasement		Cu. Yd.	4.6	
Reinforcement Bars, Epoxy Coated		Pound	8,570	
Furnishing Steel Piles HP12x53		Foot	588	
Driving Piles		Foot	588	
Test Pile Steel HP12x53		Each	1	
Pile Shoes		Each	13	
Granular Backfill for Structures		Cu. Yd.	72	
Concrete Sealer		Sq. Ft.	405	
Geocomposite Wall Drain		Sq. Yd.	31	
Pipe Underdrains for Structures 4"		Foot	64	

NOTES:

1. See sheet S-155 for typical notes.

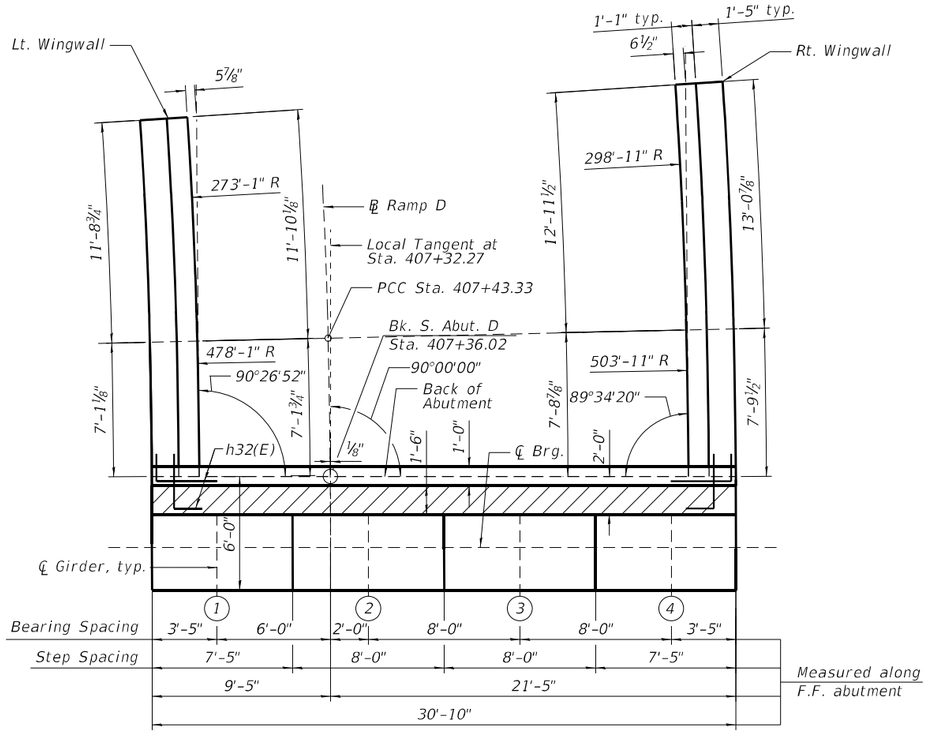

TOP VIEW

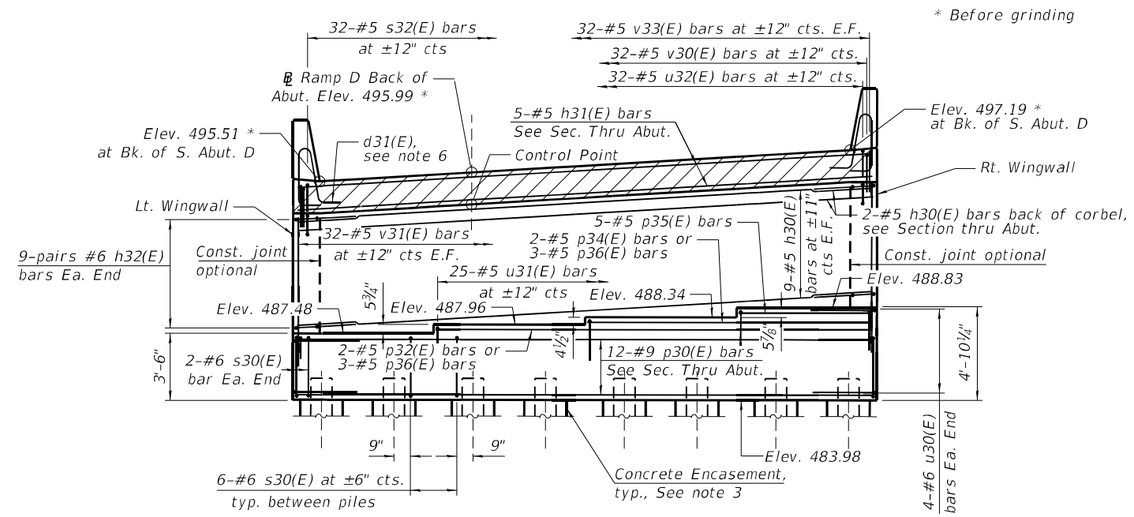

ELEVATION
(Looking Upstation)

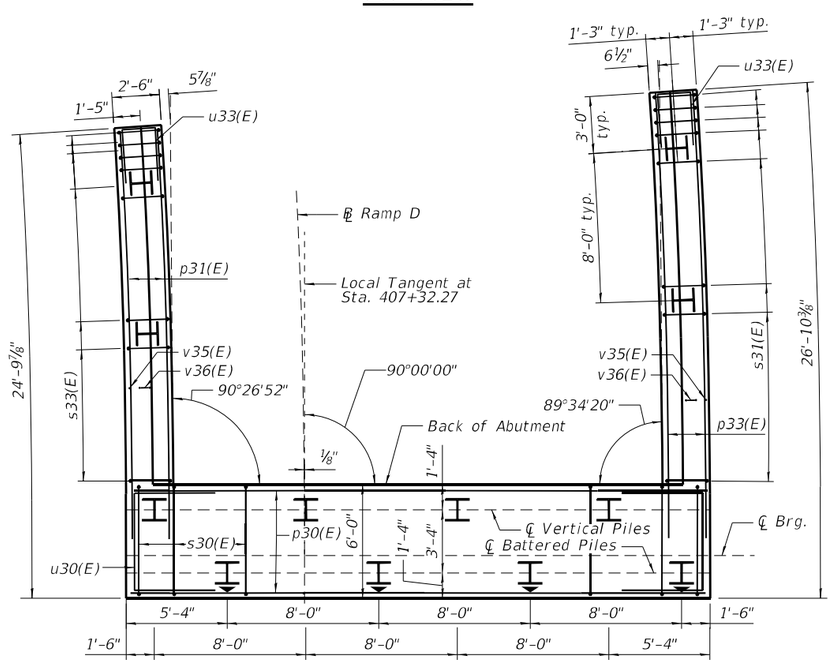

PLAN - PILE CAP

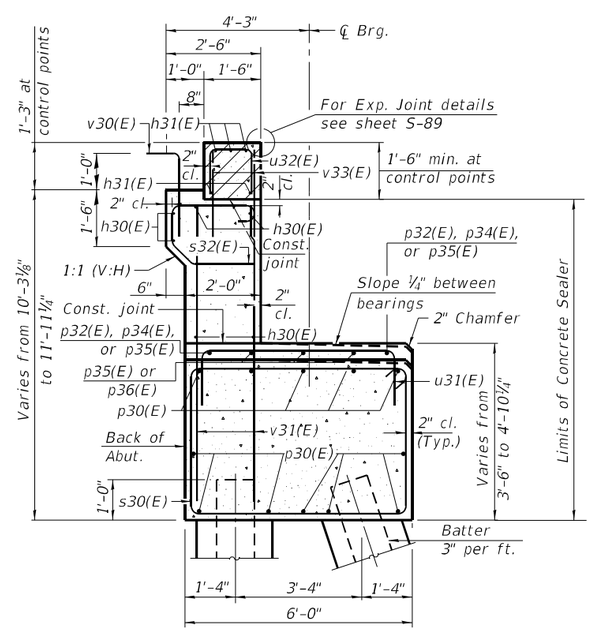

SECTION THRU PILE SUPPORTED SOUTH ABUT. D

S. ABUT. D PILE DATA:

Type: HP12x53
Nominal Required Bearing: 418 kips
Factored Resistance Available: 230 kips
Est. Length: 56 feet
No. Production Piles: 12
No. Test Piles: 0

NOTES:

1. Hatched area to be poured after superstructure false work has been removed. Quantity of concrete included with Concrete Superstructure.
2. Pour steps monolithically with cap.
3. For Concrete Encasement and pile details, see sheet S-178.
4. Equipment and storage of material shall not be placed within 6 ft of abutment or wingwalls prior to placement of approach slab.
5. The 2" PJF shall be included with the cost of Concrete Structures. The PJF should be per Article 1051.09 of the standard specifications, and bonded to wingwall with suitable adhesive as recommended by supplier.
6. d31(E) bars in the parapet above the paving block included with the approach slab bill of material, see sheets S-85 & S-86.
7. For Sections see sheet S-160.

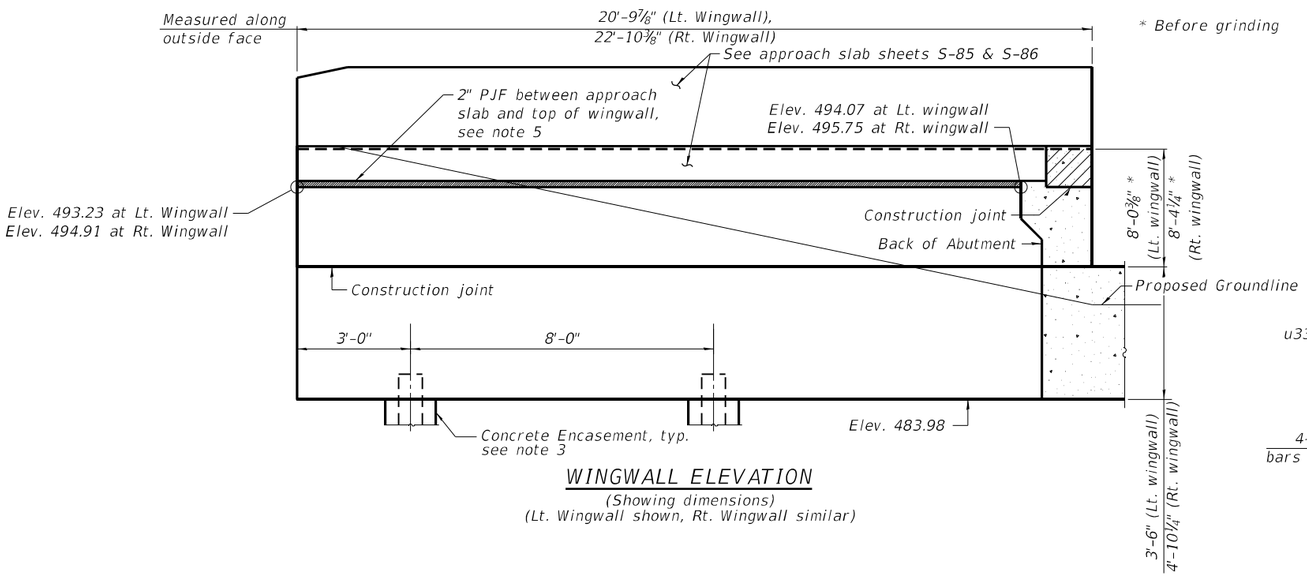

WINGWALL ELEVATION
(Showing dimensions)
(Lt. Wingwall shown, Rt. Wingwall similar)

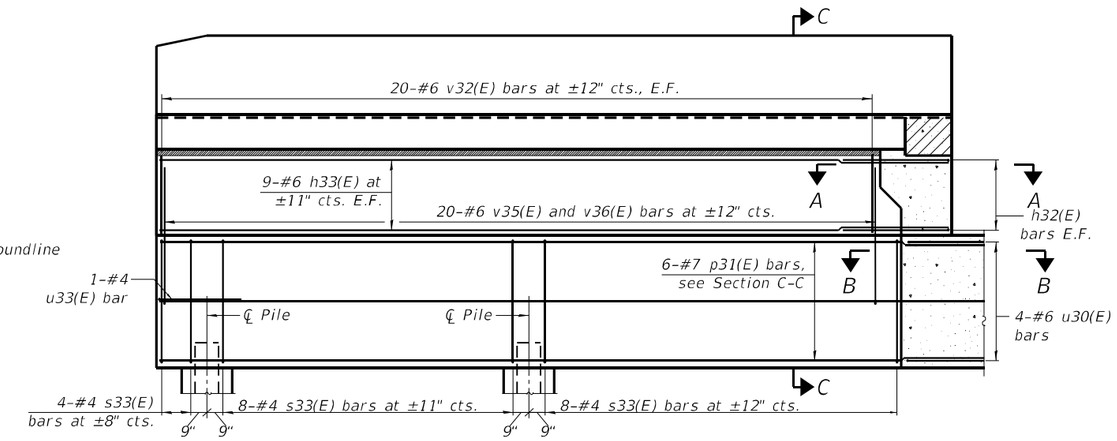

LT WINGWALL ELEVATION
(Showing reinforcement)

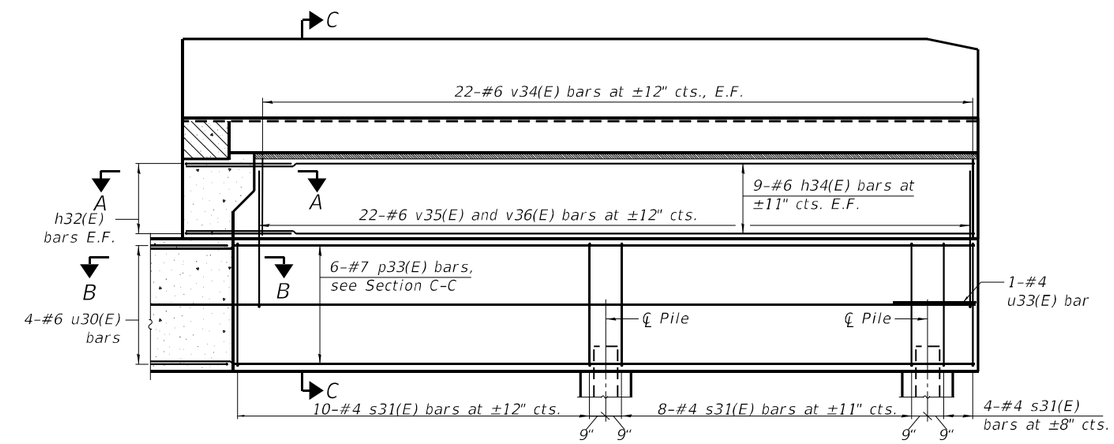

RT WINGWALL ELEVATION
(Showing reinforcement)

NOTES:

1. See sheet S-158 for typical notes.

MODEL: Default
FILE NAME: pw:\\mis-ussa-pw.bentley.com:mb-ss-pw-03\Documents\Chicago_IL\01 Projects\179740 IDOT Cedar\SEx1 PhII\5.0 CADD\CAD Sheets\090182-68C55-159-SEAbut2.dgn

Michael Baker INTERNATIONAL 200 W Adams Street Suite 1800 Chicago, IL 60606 PH: 312.707.8770 FAX: 312.707.8804	USER NAME = DLamb	DESIGNED - EML/XW	REVISED -	STATE OF ILLINOIS DEPARTMENT OF TRANSPORTATION	SOUTH ABUTMENT D SECTIONS & DETAILS 1 STRUCTURE NO. 090-0182	F.A.P. RTE.	SECTION	COUNTY	TOTAL SHEETS	SHEET NO.
		CHECKED - PAT/AMR	REVISED -			VAR.	13 (HVB, HB-3) BR-1;R	TAZEWELL	1173	685
	PLOT SCALE = 0:2,0000 ':" / in.	DRAWN - XW/JTB	REVISED -					CONTRACT NO. 68C55		
	PLOT DATE = 6/6/2023	CHECKED - JMK	REVISED -		SHEET S-159 OF S-194 SHEETS		ILLINOIS	FED. AID PROJECT		

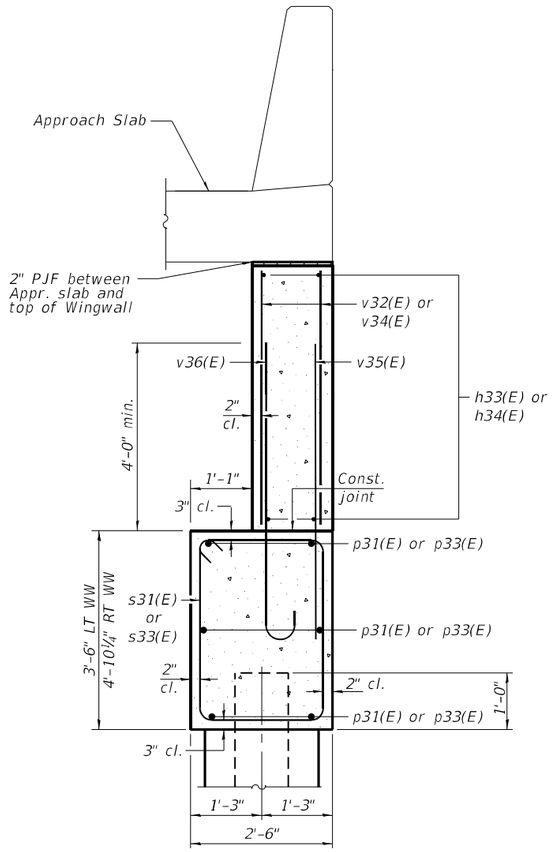

SECTION C-C

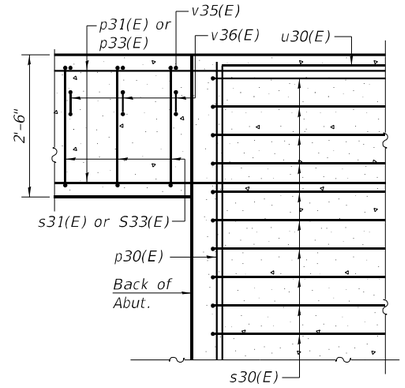

SECTION B-B

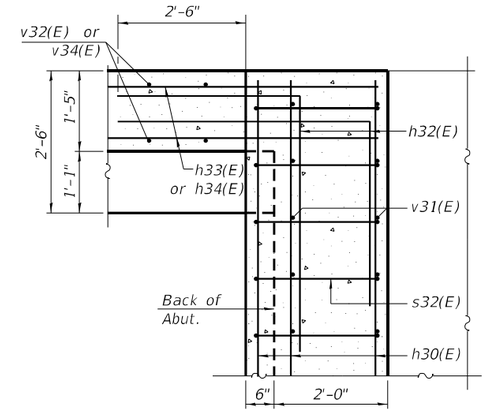

SECTION A-A

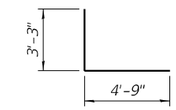

BAR h32(E)

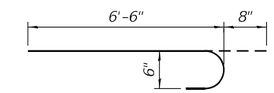

BAR v36(E)

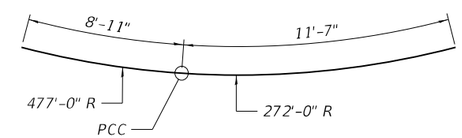

BAR h33(E)

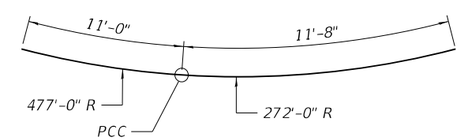

BAR p31(E) and h34(E)

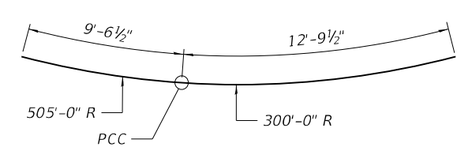

BAR h35(E)

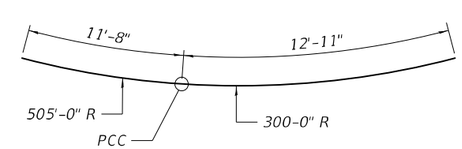

BAR p33(E) and h36(E)

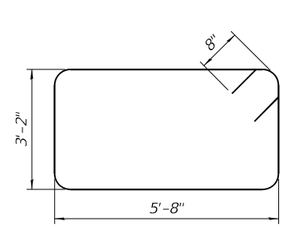

BAR s30(E)

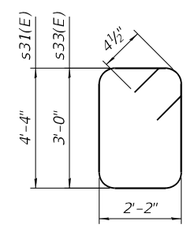

BAR s31(E), s33(E)

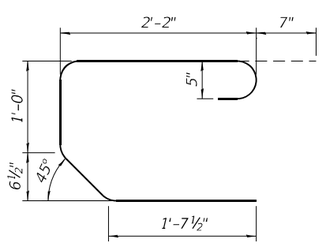

BAR s32(E)

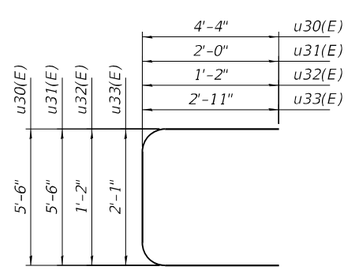

BAR u30(E), u31(E), u32(E), u33(E)

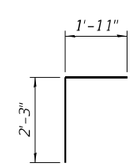

BAR v30(E)

SOUTH ABUTMENT D BILL OF MATERIAL

Bar	No.	Size	Length	Shape
h30(E)	20	#5	30'-6"	
h31(E)	5	#5	30'-6"	
h32(E)	36	#6	8'-0"	
h33(E)	18	#6	20'-6"	
h34(E)	18	#6	22'-4"	
p30(E)	12	#9	30'-6"	
p31(E)	6	#7	22'-8"	
p32(E)	2	#5	23'-1"	
p33(E)	6	#7	24'-7"	
p34(E)	2	#5	15'-1"	
p35(E)	5	#5	7'-1"	
p36(E)	6	#5	7'-8"	
s30(E)	46	#6	19'-0"	
s31(E)	22	#4	13'-9"	
s32(E)	32	#5	6'-2"	
s33(E)	20	#5	11'-1"	
u30(E)	8	#6	14'-2"	
u31(E)	25	#5	9'-6"	
u32(E)	32	#5	3'-6"	
u33(E)	2	#4	7'-11"	
v30(E)	32	#5	4'-2"	
v31(E)	64	#5	9'-8"	
v32(E)	40	#6	6'-3"	
v33(E)	64	#5	2'-4"	
v34(E)	44	#6	6'-7"	
v35(E)	42	#6	6'-6"	
v36(E)	42	#6	7'-2"	
Structure Excavation			Cu. Yd.	210
Concrete Structures			Cu. Yd.	72.9
Concrete Superstructure			Cu. Yd.	2.6
Concrete Encasement			Cu. Yd.	4.2
Reinforcement Bars, Epoxy Coated			Pound	9,490
Furnishing Steel Piles HP12x53			Foot	672
Driving Piles			Foot	672
Pile Shoes			Each	12
Granular Backfill for Structures			Cu. Yd.	99
Concrete Sealer			Sq. Ft.	466
Geocomposite Wall Drain			Sq. Yd.	38
Pipe Underdrains for Structures 4"			Foot	58

NOTES:

1. See sheet S-158 for typical notes.

NOTES (continued):

1. Permanent casing should be twisted and pushed until top of bedrock is reached. Any other method should not be allowed. A minimum of 3-foot thick soil plug should be maintained while pushing, twisting and excavating within the casing until top of bedrock is reached.
2. Plan dimensions and details relative to existing plans are subject to nominal construction variations. The Contractor shall field verify existing dimensions and details affecting new construction and make necessary approved adjustments prior to construction or ordering of materials. Such variations shall not be a cause for change in scope of the work, however, the Contractor will be paid for the quantity actually furnished at the unit bid price of the work.
3. Expanded polystyrene shall be included in the cost of Concrete Structures.

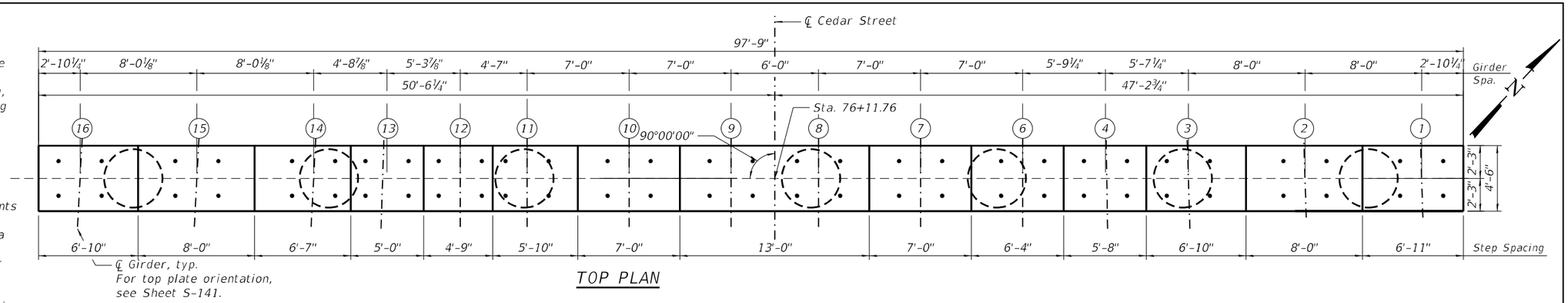

TOP PLAN

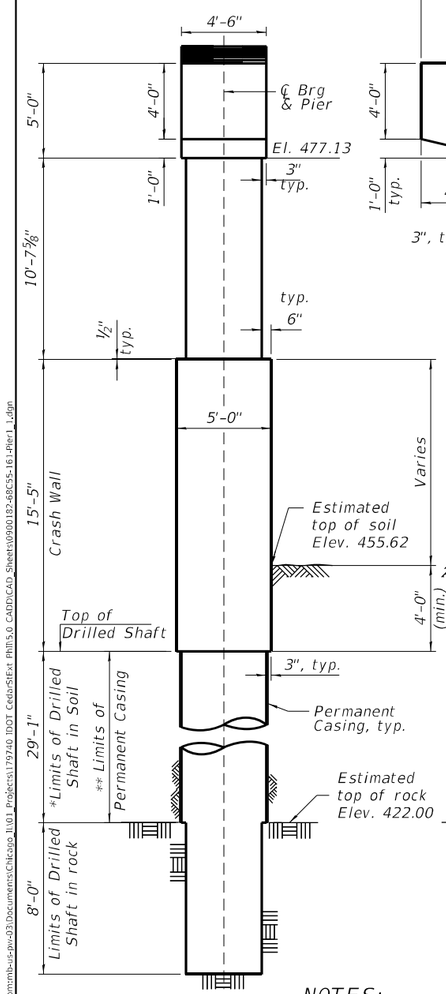

END VIEW

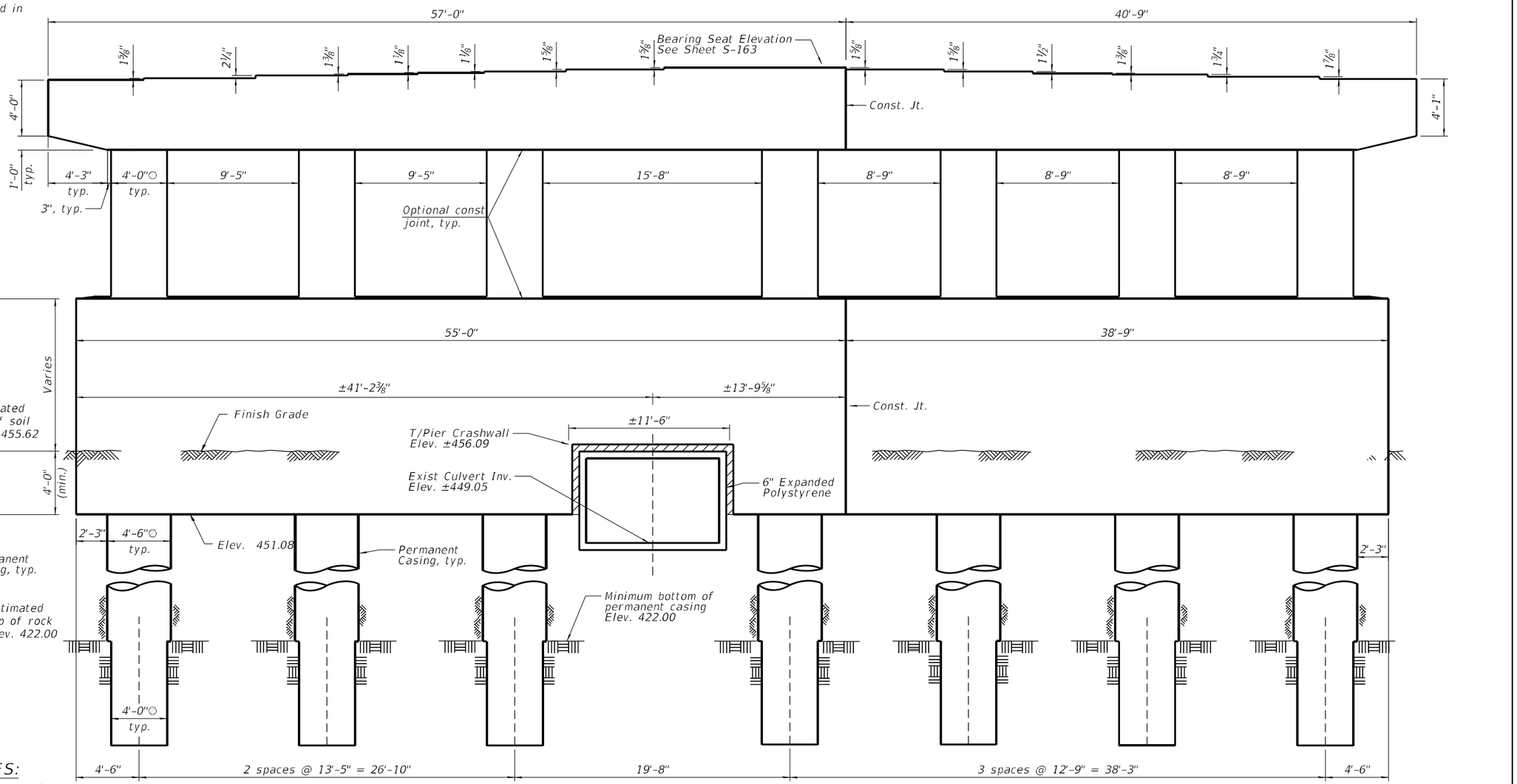

ELEVATION
(Looking Downstation)

* See Sheet S-163
** See Sheet S-163

NOTES:

1. Space reinforcement to miss anchor bolts.
2. Pour steps monolithically with cap.
3. For Details and Bill of Material, see Sheet S-163.

MODEL: Default
FILE NAME: pw:\\mb-ii-pw.bentley.com:mb-ii-pw-03\Documents\Chicago_IL\01 Projects\179740 IDOT Cedar Site 1 Phase 5.0 CADD\CAD_Sheets\0900182-68C55-161-Pier1.dgn

Michael Baker INTERNATIONAL 200 W Adams Street Suite 1800 Chicago, IL 60606 PH: 312.707.8772 FAX: 312.707.8804	USER NAME = DLamb	DESIGNED - YC	REVISED -
		CHECKED - EWT	REVISED -
	PLOT SCALE = 0.1667 ' / in.	DRAWN - RBH/DMJ	REVISED -
	PLOT DATE = 6/6/2023	CHECKED - EWT	REVISED -

STATE OF ILLINOIS
DEPARTMENT OF TRANSPORTATION

PIER 1 PLAN & ELEVATION
STRUCTURE NO. 090–0182

SHEET S-161 OF S-194 SHEETS

F.A.P. RTE.	SECTION	COUNTY	TOTAL SHEETS	SHEET NO.
VAR.	13 (HVB, HB-3) BR-1;R	TAZEWELL	1173	687
		CONTRACT NO. 68C55		
		ILLINOIS FED. AID PROJECT		

NOTES:

1. #5 sp100 and #5 sp101(E) - Provide 1 ½ extra turns, shop welded together per AWS D1.4 top and bottom. Extend spiral 2" into crash wall or pier cap. Provide 4-#4 spacers or equivalent.
2. All edges have a ¾" chamfer, unless noted otherwise.
3. See Sheet S-177 for Bar Splicer Assembly.

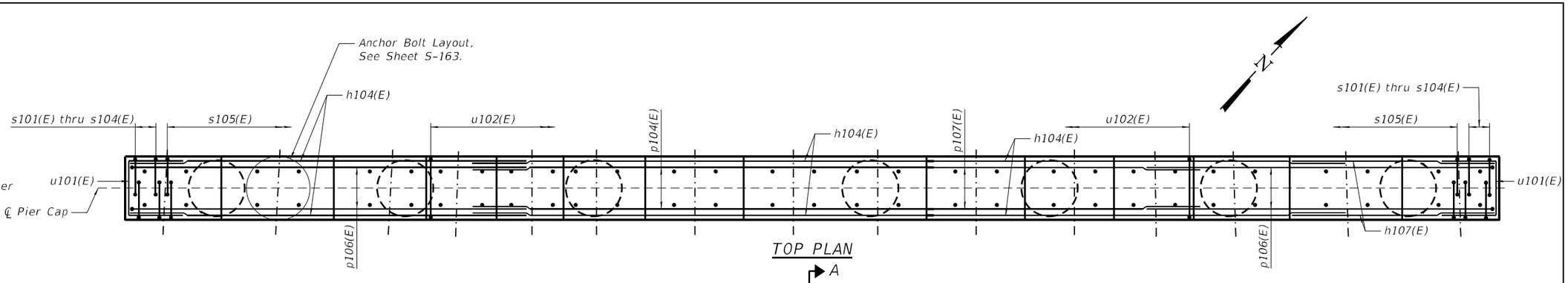

TOP PLAN

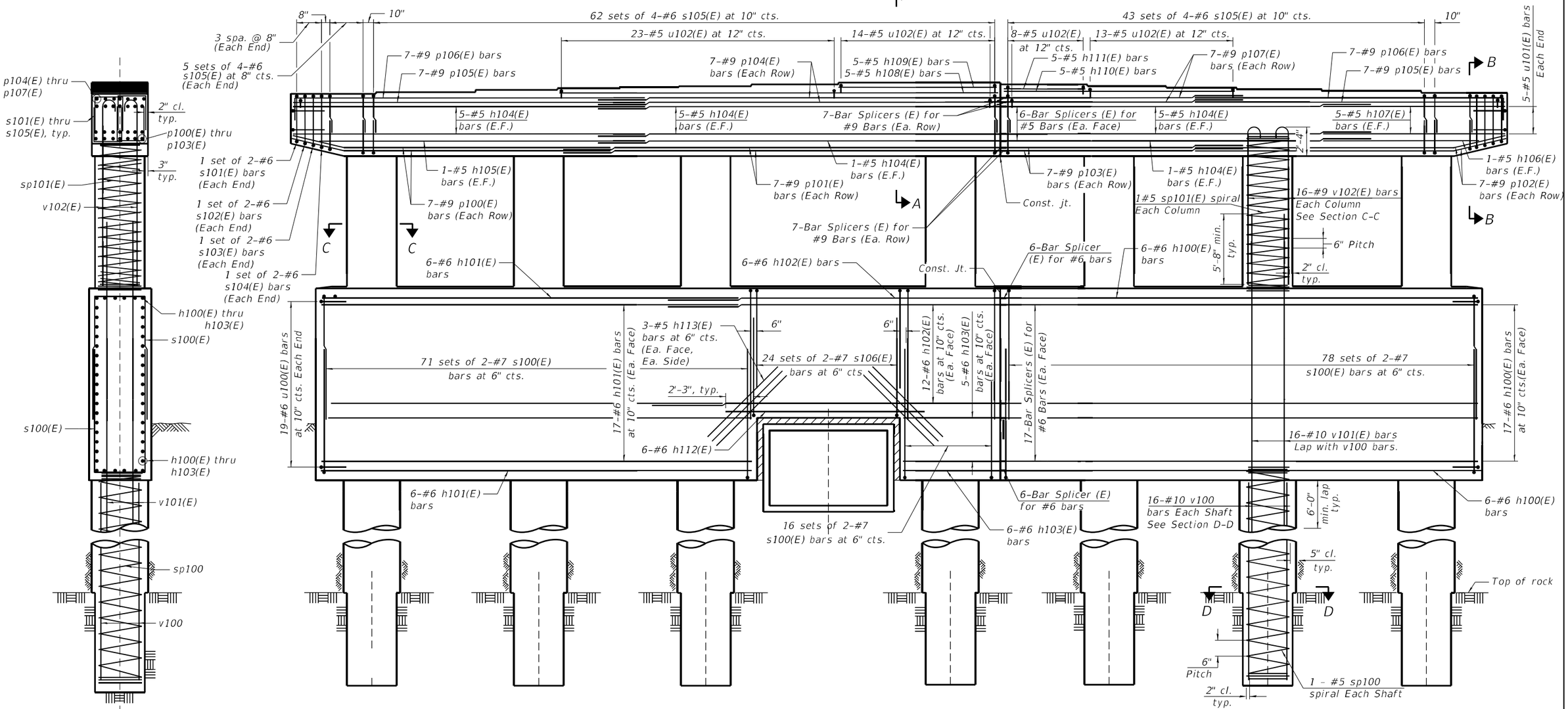

END VIEW

ELEVATION

Michael Baker INTERNATIONAL 200 W Adams Street Suite 1800 Chicago, IL 60606 PH: 312.707.8772 FAX: 312.707.8804	USER NAME = DLamb	DESIGNED - YC/MLK	REVISED -	STATE OF ILLINOIS DEPARTMENT OF TRANSPORTATION	PIER 1 DETAILS 1 STRUCTURE NO. 090-0182
		CHECKED - EWT	REVISED -		
	PLOT SCALE = 0:2.0000 ':" / in.	DRAWN - RBH/DMJ	REVISED -		
	PLOT DATE = 6/6/2023	CHECKED - EWT	REVISED -		SHEET S-162 OF S-194 SHEETS

F.A.P. RTE.	SECTION	COUNTY	TOTAL SHEETS	SHEET NO.
VAR.	13 (HVB, HB-3) BR-1;R	TAZEWELL	1173	688
		CONTRACT NO. 68C55		
		ILLINOIS FED. AID PROJECT		

MODEL: Default
FILE NAME: pw:\\mb-ul-pw.bentley.com:mb-ul-pw-03\Documents\Chicago_IL\01 Projects\179740 IDOT Cedar Sites\PhII\5.0 CADD\CAD Sheets\0900182-68C55-162-Pier1_2.dgn

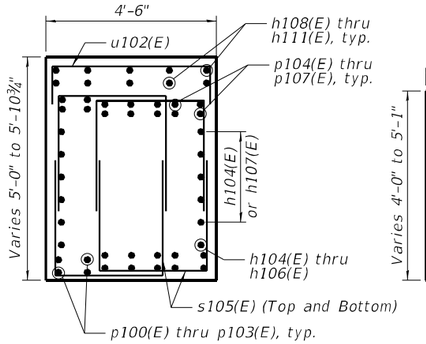

SECTION A-A

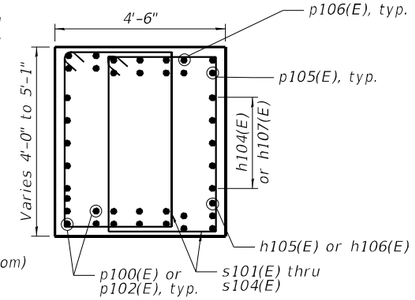

SECTION B-B

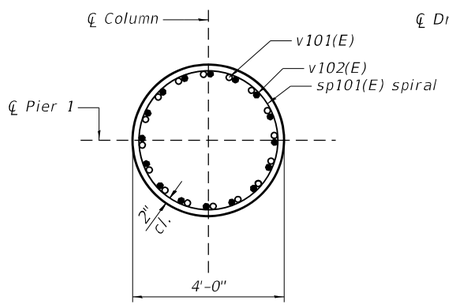

SECTION C-C

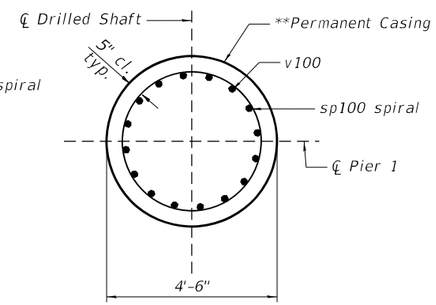

SECTION D-D

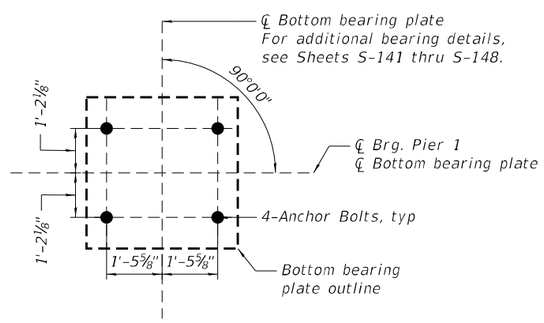

ANCHOR BOLT LAYOUT

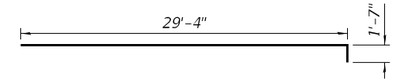

BAR p106(E)

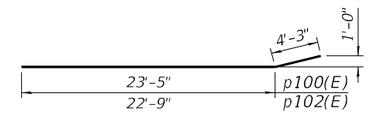

BAR p100(E) & p102(E)

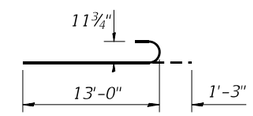

BAR v102(E)

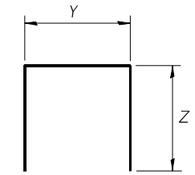

BAR X

X	Y	Z
s100(E)	4'-8"	9'-9"
s105(E)	2'-9"	4'-3"
s106(E)	4'-8"	7'-5"
u100(E)	4'-6"	3'-4"
u101(E)	4'-2"	2'-9"
u102(E)	4'-2"	2'-9"

BAR	A	B
s101(E)	4'-2"	2'-9"
s102(E)	4'-0"	2'-9"
s103(E)	3'-10"	2'-9"
s104(E)	3'-8"	2'-9"

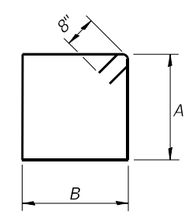

BARS S101(E) thru S104(E)

BILL OF MATERIAL

	Bar	No.	Size	Length	Shape
	h100(E)	46	#6	38'-6"	
	h101(E)	46	#6	34'-11"	
	h102(E)	30	#6	23'-10"	
	h103(E)	16	#6	7'-9"	
	h104(E)	34	#5	30'-3"	
	h105(E)	2	#5	28'-3"	
	h106(E)	2	#5	11'-11"	
	h107(E)	10	#5	13'-11"	
	h108(E)	5	#5	35'-3"	
	h109(E)	5	#5	12'-8"	
	h110(E)	5	#5	18'-8"	
	h111(E)	5	#5	6'-8"	
	h112(E)	6	#6	16'-0"	
	h113(E)	12	#5	8'-0"	
	p100(E)	14	#9	27'-8"	
	p101(E)	14	#9	34'-10"	
	p102(E)	14	#9	27'-0"	
	p103(E)	14	#9	19'-3"	
	p104(E)	14	#9	33'-9"	
	p105(E)	14	#9	29'-4"	
	p106(E)	14	#9	30'-11"	
	p107(E)	14	#9	17'-8"	
	s100(E)	330	#7	24'-2"	
	s101(E)	4	#6	14'-2"	
	s102(E)	4	#6	14'-6"	
	s103(E)	4	#6	14'-10"	
	s104(E)	4	#6	15'-2"	
	s105(E)	460	#6	11'-3"	
	s106(E)	48	#7	19'-6"	
***	sp100	7	#5	37'-4"	
***	sp101(E)	7	#5	10'-10"	
	u100(E)	38	#6	11'-2"	
	u101(E)	10	#5	9'-8"	
	u102(E)	58	#5	9'-8"	
	v100	112	#10	36'-11"	
	v101(E)	112	#10	27'-1"	
	v102(E)	112	#9	14'-3"	
	Structure Excavation		Cu. Yd.	148	
	Concrete Structures		Cu. Yd.	390.8	
	Reinforcement Bars		Pound	24,080	
	Reinforcement Bars, Epoxy Coated		Pound	66,720	
	Permanent Casing		Foot	204	
	Drilled Shaft in Soil		Cu. Yd.	120.0	
	Drilled Shaft in Rock		Cu. Yd.	26.1	

***Length is height of spiral.

BEARING SEAT ELEVATION

GIRDER	1	2	3	4	6	7	8	9	10	11	12	13	14	15	16
ELEV.	482.21	482.37	482.52	482.63	482.75	482.89	483.03	483.03	482.89	482.75	482.66	482.57	482.46	482.27	482.13

* The quantities and reinforcement detailing are based on the top of shaft and the estimated top of rock elevations shown and may change based on the actual top of rock encountered at each shaft and the final top of shaft elevation.

** Contractor is responsible for determining the casing thickness and the actual tip elevation to be used. See Article 516.06(d) of the Standard Specifications. Pay limits for the Permanent casing shall be based on the minimum length shown. Permanent Casing shall extend into the rock as needed if the upper zone of rock is fractured and excessive water inflow is encountered.

MINIMUM BAR LAP

#5 bar = 3'-2"
#6 bar = 4'-4"
#7 bar = 4'-5"
#9 bar, bottom = 5'-8"
#9 bar, top = 6'-5"
#10 bar = 6'-5"

NOTES:

1. Space reinforcement to miss anchor bolts.
2. Pour steps monolithically with cap.

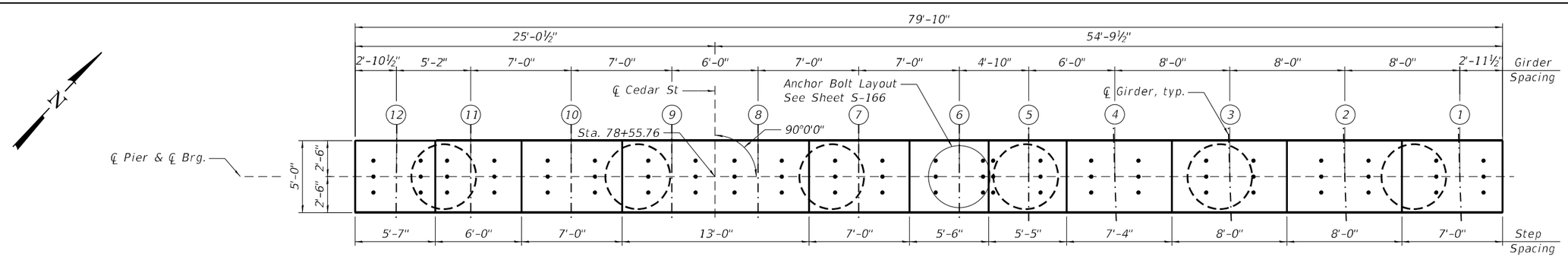

TOP PLAN

BEARING SEAT ELEVATIONS	
GIRDER	ELEV.
1	488.08
2	488.24
3	488.41
4	488.55
5	488.64
6	488.78
7	488.92
8	489.06
9	489.06
10	488.92
11	488.78
12	488.64

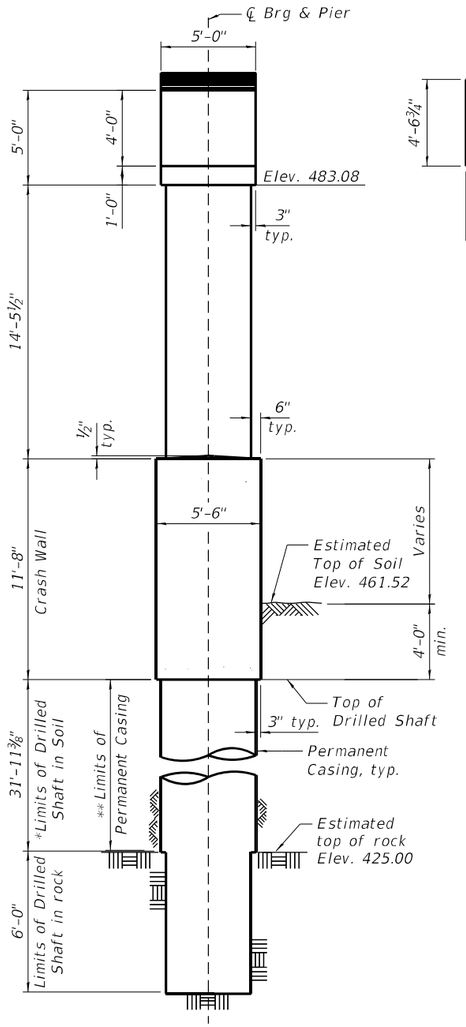

END VIEW

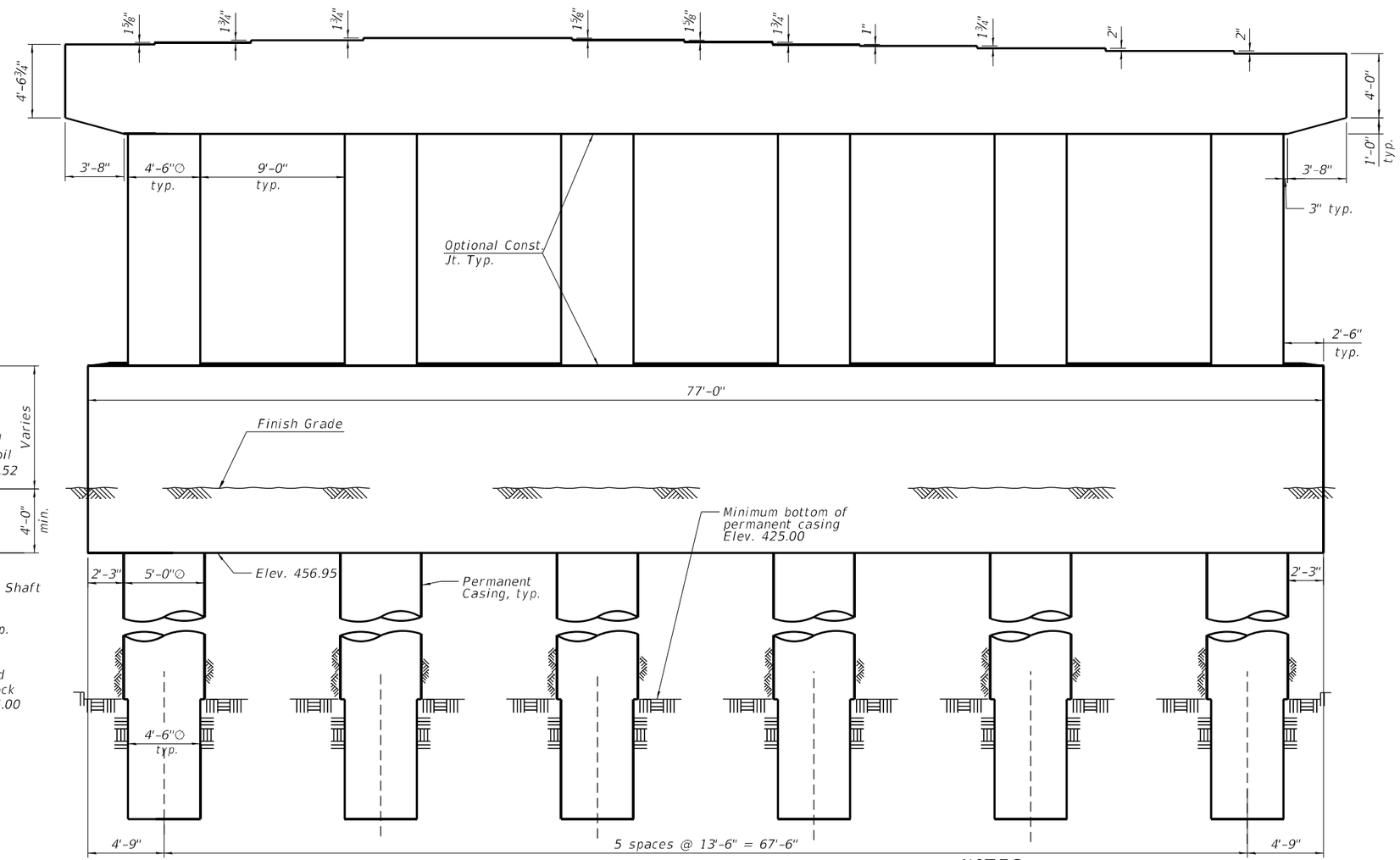

ELEVATION

(Looking Downstation)

* The quantities and reinforcement detailing are based on the top of shaft and the estimated top of rock elevations shown and may change based on the actual top of rock encountered at each shaft and the final top of shaft elevation.

** Contractor is responsible for determining the casing thickness and the actual tip elevation to be used. See Article 516.06(d) of the Standard Specifications. Pay limits for the Permanent Casing shall be based on the minimum length shown. Permanent Casing shall extend into the rock as needed if the upper zone of rock is fractured and excessive water inflow is encountered.

NOTES:

1. Space reinforcement to miss anchor bolts.
2. Pour steps monolithically with cap.
3. For Sections, Bill of Material, and Details see Sheet S-166.
4. Permanent casing should be twisted and pushed until top of bedrock is reached. Any other method should not be allowed. A minimum of 3-foot thick soil plug should be maintained while pushing, twisting and excavating within the casing until top of bedrock is reached.

Michael Baker INTERNATIONAL
200 W Adams Street
Suite 1800
Chicago, IL 60606
PH: 312.707.8770
FAX: 312.707.8804

USER NAME = DLamb	DESIGNED - YC	REVISED -	
	CHECKED - EWT	REVISED -	
PLOT SCALE = 0:2.0000 ':" / in.	DRAWN - DCL	REVISED -	
PLOT DATE = 6/6/2023	CHECKED - EWT	REVISED -	

STATE OF ILLINOIS
DEPARTMENT OF TRANSPORTATION

PIER 2 PLAN & ELEVATION
STRUCTURE NO. 090-0182

SHEET S-164 OF S-194 SHEETS

F.A.P. RTE.	SECTION	COUNTY	TOTAL SHEETS	SHEET NO.
VAR.	13 (HVB, HB-3) BR-1;R	TAZEWELL	1173	690
		CONTRACT NO. 68C55		
		ILLINOIS FED. AID PROJECT		

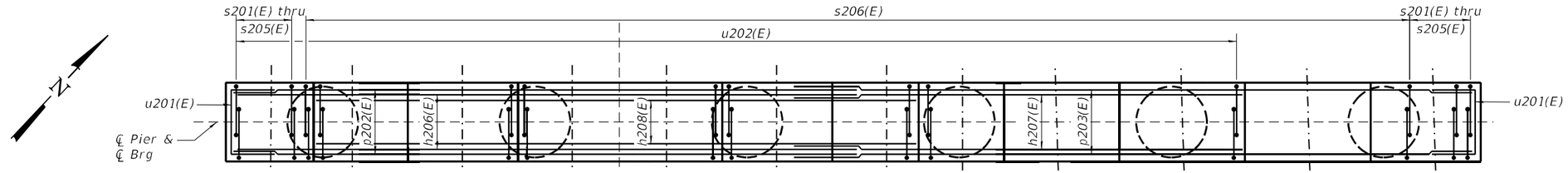

TOP PLAN

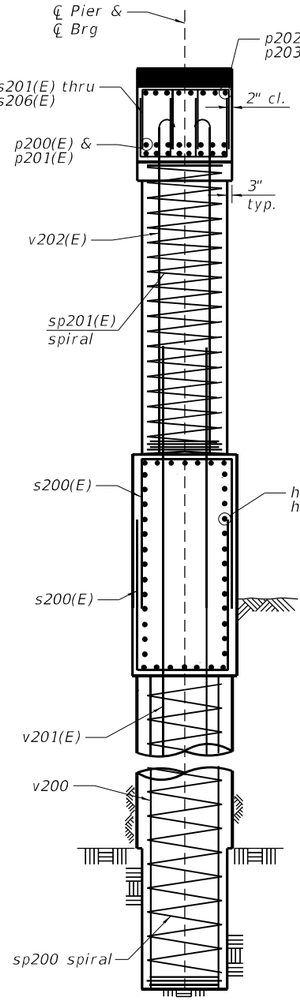

END VIEW

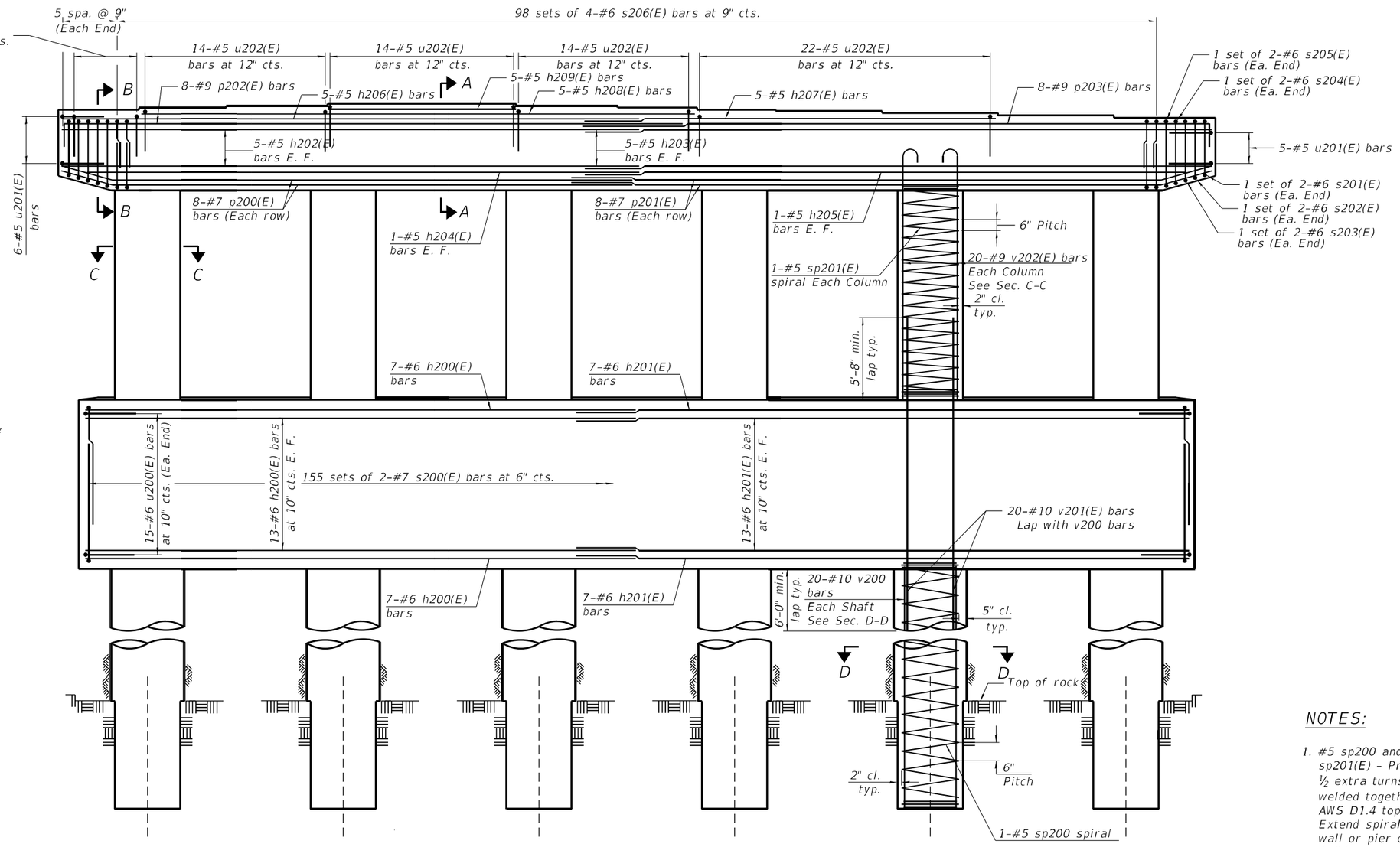

ELEVATION

NOTES:

1. #5 sp200 and #5 sp201(E) - Provide 1 ½ extra turns, shop welded together per AWS D1.4 top and bottom. Extend spiral 2" into crash wall or pier cap. Provide 4-#4 spacers or equivalent.
2. All edges have a ¾" chamfer, unless noted otherwise.

Michael Baker INTERNATIONAL
200 W Adams Street
Suite 1800
Chicago, IL 60606
P: 312.707.8770
FAX: 312.707.8804

USER NAME = DLamb	DESIGNED - YC	REVISED -	
	CHECKED - EWT	REVISED -	
PLOT SCALE = 0:2.0000 ':" / in.	DRAWN - DCL	REVISED -	
PLOT DATE = 6/6/2023	CHECKED - EWT	REVISED -	

STATE OF ILLINOIS
DEPARTMENT OF TRANSPORTATION

PIER 2 DETAILS 1
STRUCTURE NO. 090-0182

SHEET S-165 OF S-194 SHEETS

F.A.P. RTE.	SECTION	COUNTY	TOTAL SHEETS	SHEET NO.
VAR.	13 (HVB, HB-3) BR-1;R	TAZEWELL	1173	691
		CONTRACT NO. 68C55		
		ILLINOIS	FED. AID PROJECT	

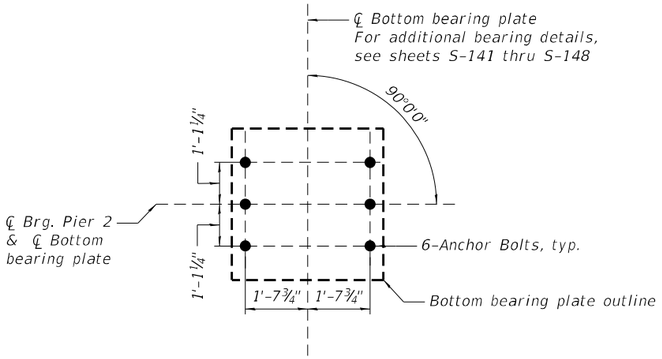

ANCHOR BOLT LAYOUT

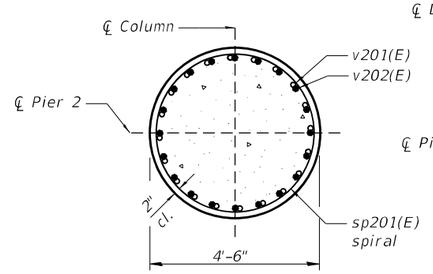

SECTION C-C

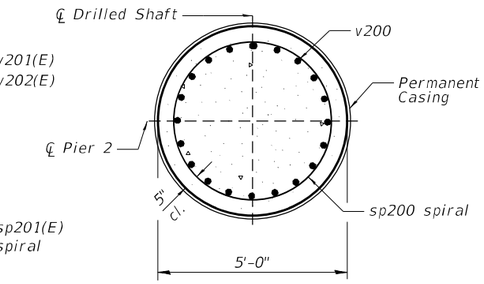

SECTION D-D

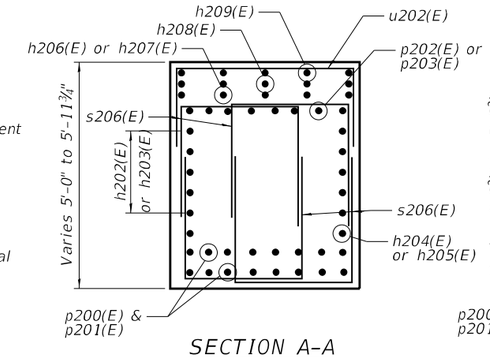

SECTION A-A

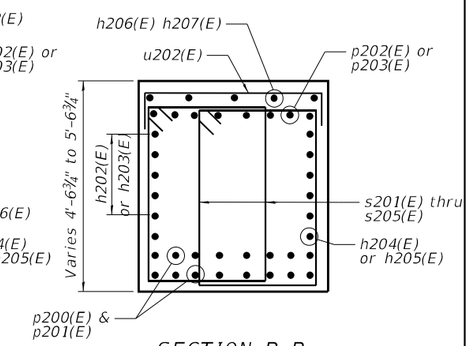

SECTION B-B

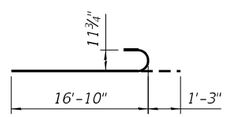

BAR v202 (E)

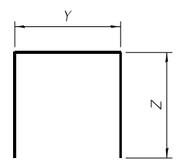

BAR X

X	Y	Z
s200(E)	5'-2"	7'-11"
s206(E)	3'-1"	4'-3"
u200(E)	5'-2"	3'-4"
u201(E)	4'-8"	2'-9"
u202(E)	4'-8"	2'-9"

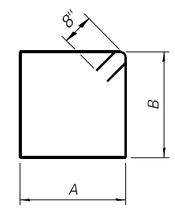

BARS s201(E) thru s205(E)

Bar	A	B
s201(E)	3'-1"	3'-8"
s202(E)	3'-1"	3'-11"
s203(E)	3'-1"	4'-1"
s204(E)	3'-1"	4'-4"
s205(E)	3'-1"	4'-6"

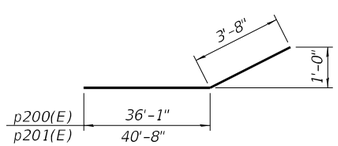

BAR p200(E) & p201(E)

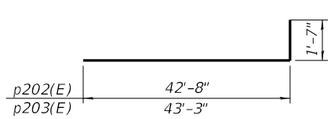

BAR p202(E) & p203(E)

BILL OF MATERIAL

	Bar	No.	Size	Length	Shape
	h200(E)	40	#6	38'-6"	
	h201(E)	40	#6	42'-6"	
	h202(E)	10	#5	39'-10"	
	h203(E)	10	#5	43'-3"	
	h204(E)	2	#5	38'-1"	
	h205(E)	2	#5	41'-6"	
	h206(E)	5	#5	39'-10"	
	h207(E)	5	#5	28'-3"	
	h208(E)	5	#5	38'-2"	
	h209(E)	5	#5	12'-8"	
	p200(E)	16	#7	39'-9"	
	p201(E)	16	#7	44'-4"	
	p202(E)	8	#9	44'-3"	
	p203(E)	8	#9	44'-10"	
	s200(E)	310	#7	21'-0"	
	s201(E)	4	#6	14'-10"	
	s202(E)	4	#6	15'-4"	
	s203(E)	4	#6	15'-8"	
	s204(E)	4	#6	16'-2"	
	s205(E)	4	#6	16'-6"	
	s206(E)	392	#6	11'-7"	
***	sp200	6	#5	38'-2"	
***	sp201(E)	6	#5	14'-8"	
	u200(E)	30	#6	11'-10"	
	u201(E)	11	#5	10'-2"	
	u202(E)	71	#5	10'-2"	
	v200	120	#10	37'-9"	
	v201(E)	120	#10	23'-4"	
	v202(E)	120	#9	18'-1"	

Structure Excavation	Cu. Yd.	131
Concrete Structures	Cu. Yd.	315.0
Reinforcement Bars	Pound	25,760
Reinforcement Bars, Epoxy Coated	Pound	55,530
Permanent Casing	Foot	192
Drilled Shaft in Soil	Cu. Yd.	139.5
Drilled Shaft in Rock	Cu. Yd.	21.3

***Length is height of spiral

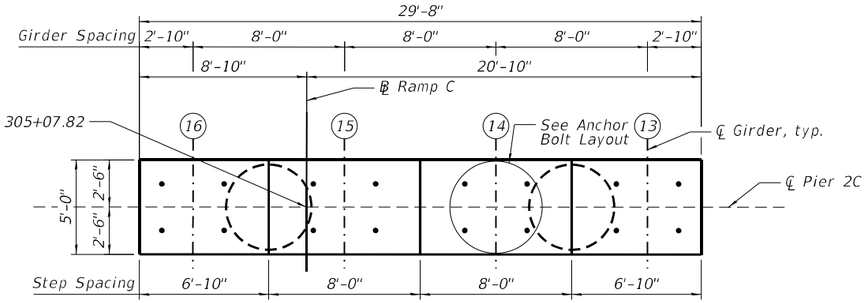

TOP PLAN

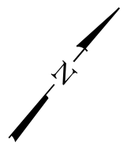

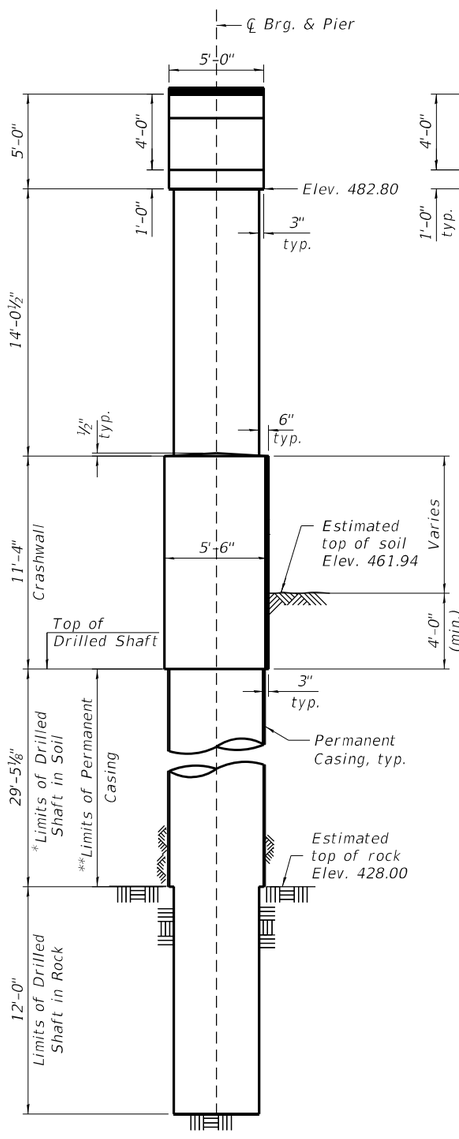

END VIEW

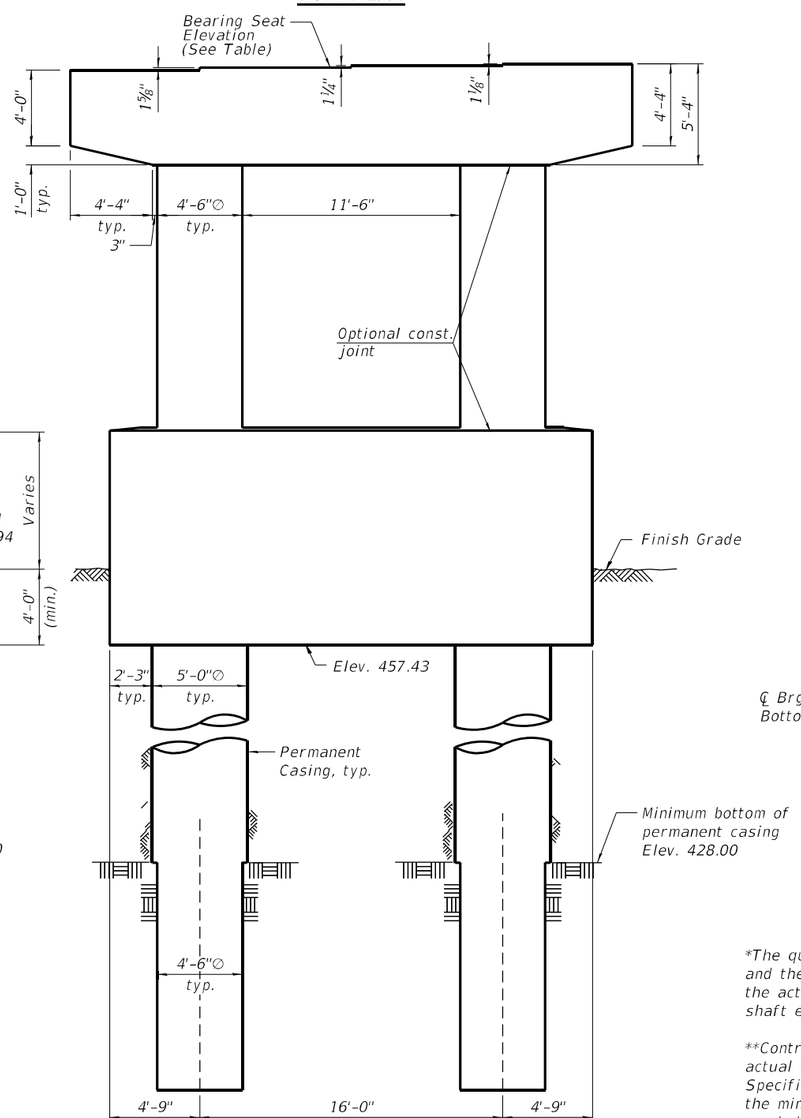

ELEVATION
(Looking Downstation)

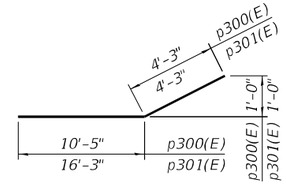

BAR p300(E) & p301(E)

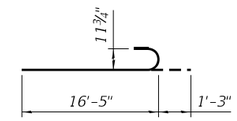

BAR v302(E)

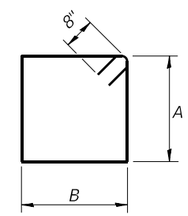

BARS s302(E) thru s305(E), s308(E), s309(E)

BAR	A	B
s302(E)	3'-9"	3'-2"
s303(E)	3'-11"	3'-2"
s304(E)	4'-0"	3'-2"
s305(E)	4'-1"	3'-2"
s308(E)	4'-2"	3'-2"
s309(E)	4'-4"	3'-2"

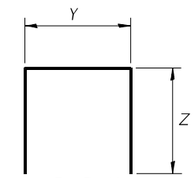

BAR X

X	Y	Z
s300(E)	5'-2"	10'-0"
s301E)	5'-2"	5'-5"
s306(E)	3'-2"	4'-3"
s307(E)	3'-2"	4'-6"
s310(E)	4'-8"	0'-10"
u300(E)	5'-0"	3'-4"
u301(E)	4'-6"	2'-9"

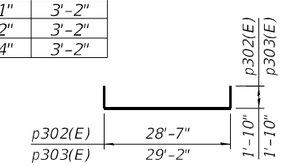

BAR p302(E) & p303(E)

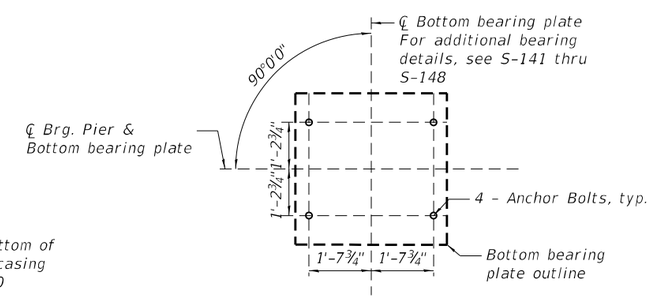

ANCHOR BOLT LAYOUT

*The quantities and reinforcement detailing are based on the top of shaft and the estimated top of rock elevations shown and may change based on the actual top of rock encountered at each shaft and the final top of shaft elevation.

**Contractor is responsible for determining the casing thickness and the actual tip elevation to be used. See Article 515.06(d) of the Standard Specifications. Pay limits for the Permanent Casing shall be based on the minimum length shown. Permanent Cashing shall extend into rock as needed if the upper zone of rock is fractured and excessive water inflow is encountered.

BILL OF MATERIAL

	Bar	No.	Size	Length	Shape
	h300(E)	38	#6	25'-2"	
	h301(E)	2	#5	23'-10"	
	h302(E)	12	#5	29'-2"	
	p300(E)	14	#9	14'-8"	
	p301(E)	14	#9	20'-6"	
	p302(E)	7	#10	32'-3"	
	p303(E)	7	#10	32'-10"	
	s300(E)	51	#7	25'-2"	
	s301(E)	51	#7	16'-0"	
	s302(E)	2	#6	15'-2"	
	s303(E)	2	#6	15'-6"	
	s304(E)	4	#6	15'-10"	
	s305(E)	2	#6	16'-0"	
	s306(E)	48	#6	11'-8"	
	s307(E)	156	#6	12'-2"	
	s308(E)	2	#6	16'-0"	
	s309(E)	2	#6	16'-4"	
	s310(E)	20	#4	6'-4"	
***	sp300	2	#5	41'-8"	
***	sp301(E)	2	#5	14'-3"	
	u300(E)	28	#6	11'-8"	
	u301(E)	12	#5	10'-0"	
	v300	40	#10	41'-7"	
	v301(E)	40	#9	23'-0"	
	v302(E)	40	#9	17'-8"	
	Structure Excavation			Cu. Yd.	47
	Concrete Structures			Cu. Yd.	103.2
	Reinforcement Bars			Pound	9,440
	Reinforcement Bars, Epoxy Coated			Pound	20,820
	Permanent Casing			Foot	59
	Drilled Shaft in Soil			Cu. Yd.	42.9
	Drilled Shaft in Rock			Cu. Yd.	14.2

***Length is height of spiral

BEARING SEAT ELEVATION	
Girder No.	Elevation
13	488.13
14	488.04
15	487.94
16	487.80

NOTES:

1. Space reinforcement to miss anchor bolts.
2. Pour steps monolithically with cap.
3. For Sections and Details see Sheet S-168.
4. Permanent casing for drilled shafts shall be twisted and pushed until top of bedrock is reached. Any other method should not be allowed. A minimum of 3-foot thick soil plug should be maintained while pushing, twisting and excavating within the casing until top of bedrock is reached.

Michael Baker INTERNATIONAL
200 W Adams Street
Suite 1800
Chicago, IL 60606
PH: 312.707.8772
FAX: 312.707.8804

USER NAME = DLamb	DESIGNED - EML	REVISED -	
	CHECKED - EWT	REVISED -	
PLOT SCALE = 0:2.0000 ':" / in.	DRAWN - EML	REVISED -	
PLOT DATE = 6/6/2023	CHECKED - JMK	REVISED -	

STATE OF ILLINOIS
DEPARTMENT OF TRANSPORTATION

PIER 2C PLAN & ELEVATION
STRUCTURE NO. 090-0182

SHEET S-167 OF S-194 SHEETS

F.A.P. RTE.	SECTION	COUNTY	TOTAL SHEETS	SHEET NO.
VAR.	13 (HVB, HB-3) BR-1;R	TAZEWELL	1173	693
		CONTRACT NO. 68C55		
		ILLINOIS FED. AID PROJECT		

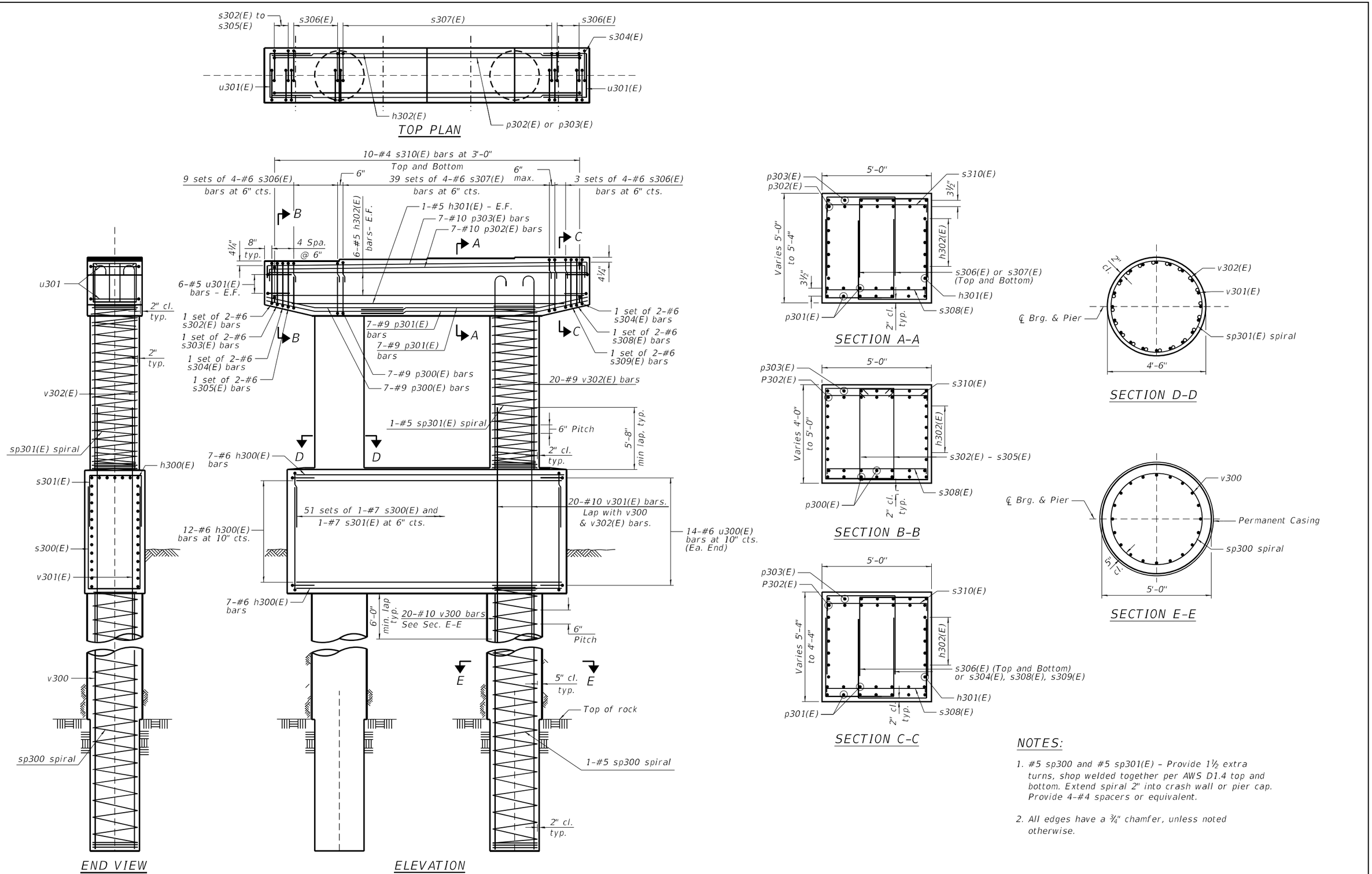

NOTES:

1. #5 sp300 and #5 sp301(E) - Provide 1½ extra turns, shop welded together per AWS D1.4 top and bottom. Extend spiral 2" into crash wall or pier cap. Provide 4-#4 spacers or equivalent.

2. All edges have a ¾" chamfer, unless noted otherwise.

MODEL: Default
FILE NAME: pw:\\mbs-us-pw.bentley.com:mb-us-pw-931\Documents\Chicago_IL\01 Projects\179740 IDOT Ceda\SIE+ PHII\5.0 CADD\CAD Sheets\0900187-68C55-168-Pier2C_2.dgn

Michael Baker INTERNATIONAL
200 W Adams Street
Suite 1800
Chicago, IL 60606
PH: 312.707.8700
FAX: 312.707.8804

USER NAME = DLamb	DESIGNED - EML	REVISED -	
	CHECKED - EWT	REVISED -	
PLOT SCALE = 0:2.0000 ':" / in.	DRAWN - EML	REVISED -	
PLOT DATE = 6/6/2023	CHECKED - JMK	REVISED -	

STATE OF ILLINOIS
DEPARTMENT OF TRANSPORTATION

PIER 2C DETAILS 1
STRUCTURE NO. 090-0182

SHEET S-168 OF S-194 SHEETS

F.A.P. RTE.	SECTION	COUNTY	TOTAL SHEETS	SHEET NO.
VAR.	13 (HVB, HB-3) BR-1;R	TAZEWELL	1173	694
		CONTRACT NO. 68C55		
	ILLINOIS	FED. AID PROJECT		

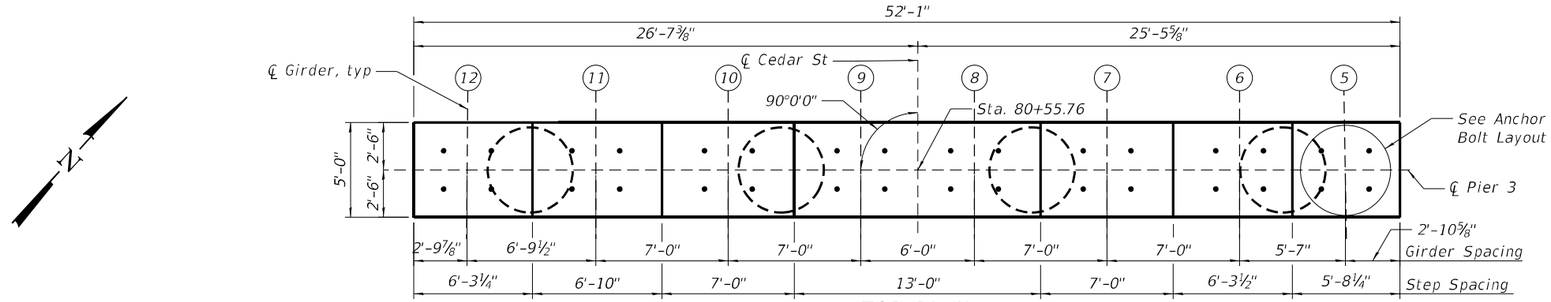

TOP PLAN

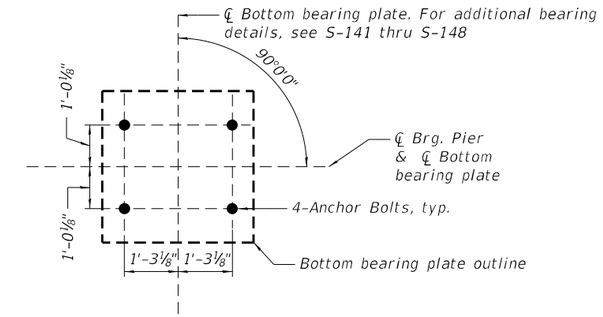

ANCHOR BOLT LAYOUT

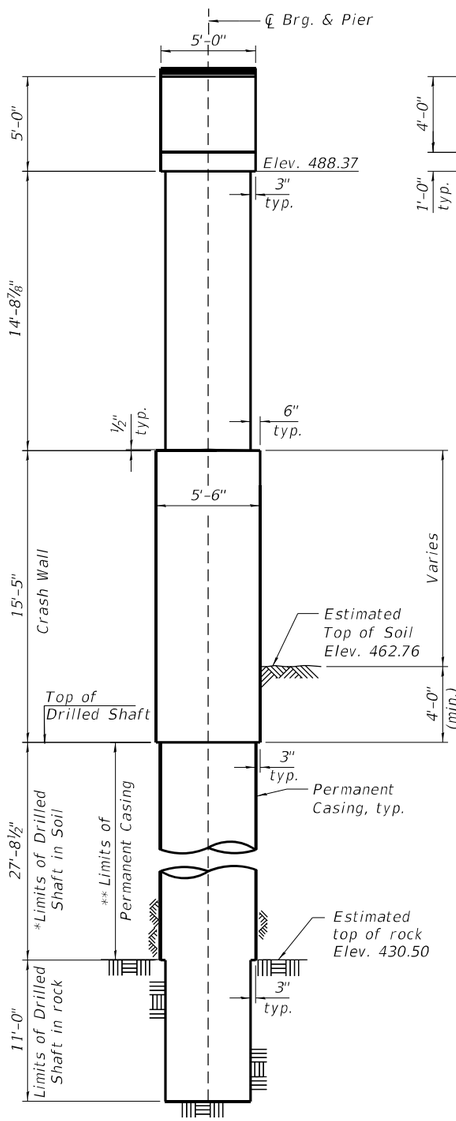

END VIEW

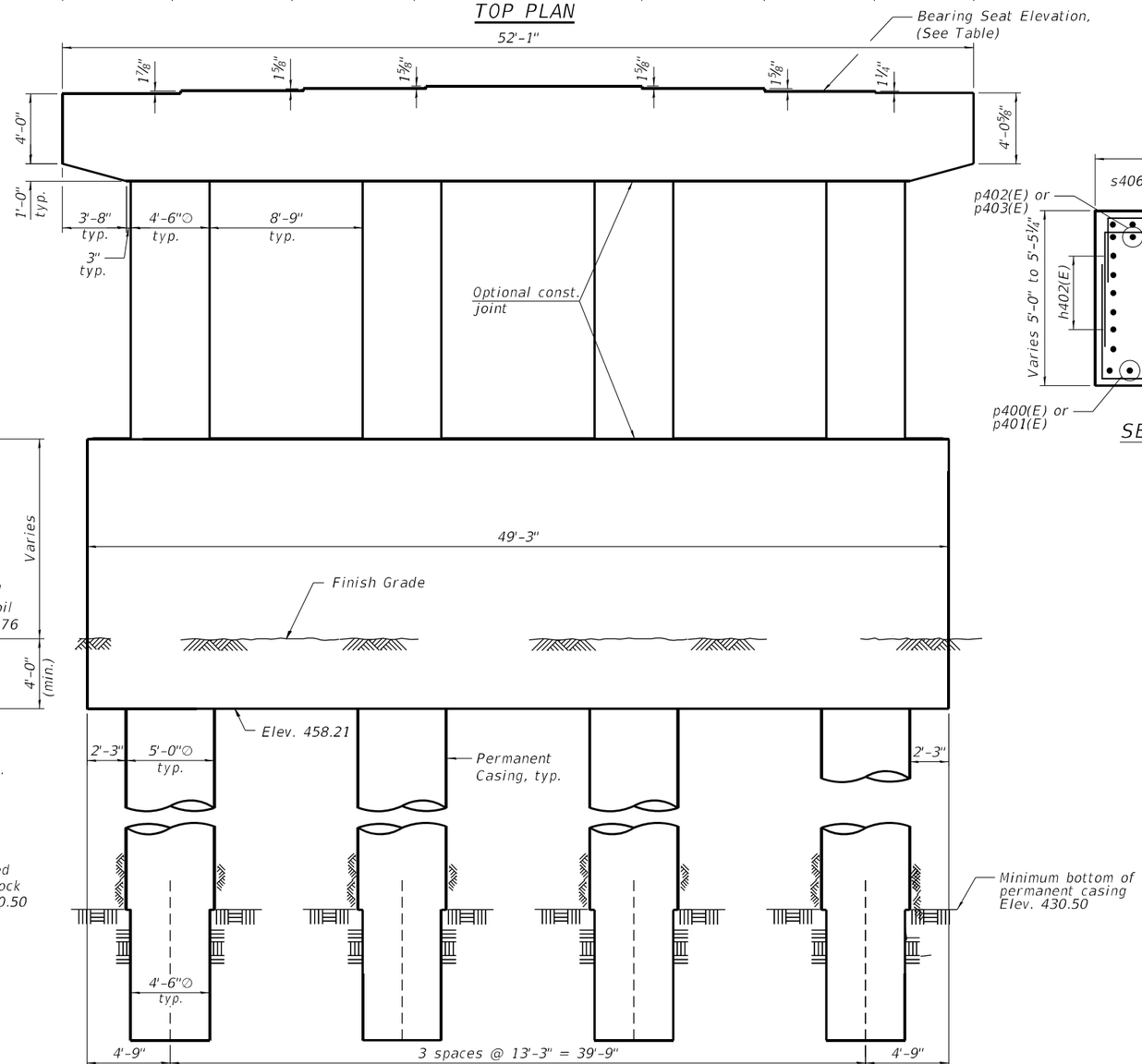

ELEVATION

(Looking Downstation)

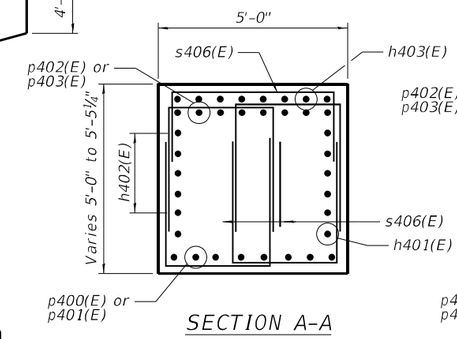

SECTION A-A

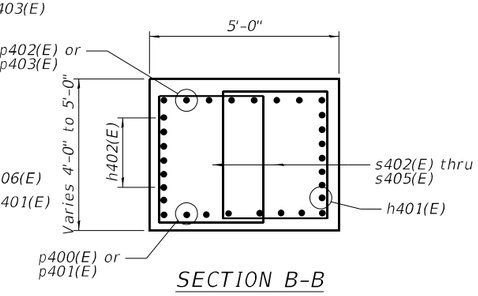

SECTION B-B

BEARING SEAT ELEVATION	
Girder No.	Elevation
5	493.42
6	493.52
7	493.66
8	493.80
9	493.80
10	493.66
11	493.53
12	493.37

NOTES:

1. Space reinforcement to miss anchor bolts.
2. Pour steps monolithically with cap.
3. For Section C-C, Section D-D, Details and Bill of Material, see Sheet S-170.
4. Permanent casing for drilled shafts shall be twisted and pushed until top of bedrock is reached. Any other method should not be allowed. A minimum of 3-foot thick soil plug should be maintained while pushing, twisting and excavating within the casing until top of bedrock is reached.

* The quantities and reinforcement detailing are based on the top of shaft and the estimated top of rock elevations shown and may change based on the actual top of rock encountered at each shaft and the final top of shaft elevation.

** Contractor is responsible for determining the casing thickness and the actual tip elevation to be used. See Article 515.06(d) of the Standard Specifications. Pay limits for the Permanent Casing shall be based on the minimum length shown. Permamnent Casing shall extend into rock as needed if the upper zone of rock is fractured and excessive water inflow is encountered.

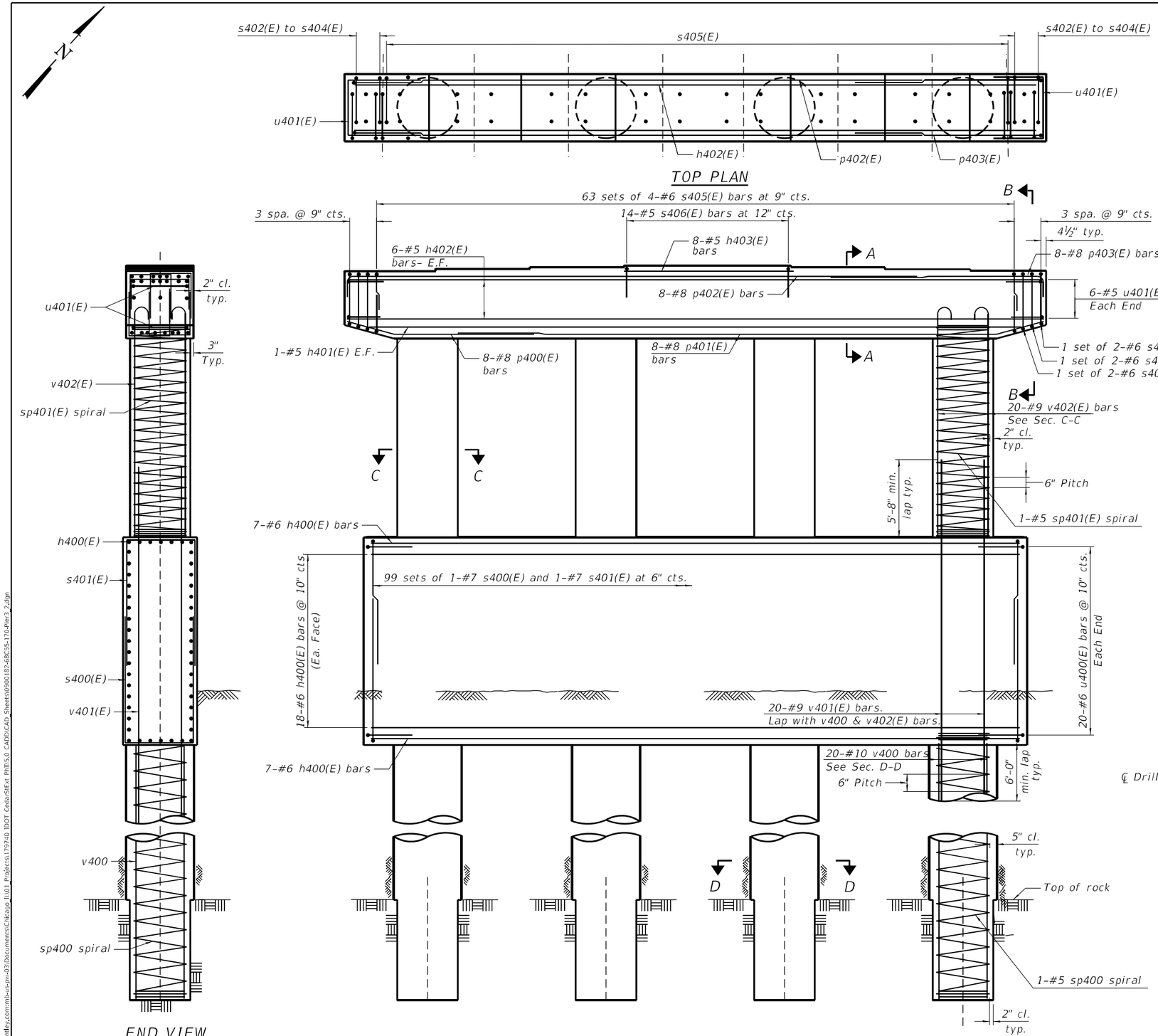

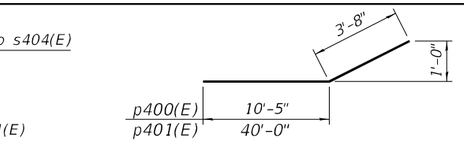

BAR p400(E) & p401(E)

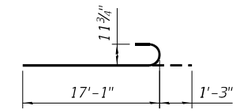

BAR v402 (E)

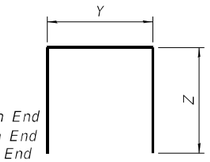

BAR X

X	Y	Z
s400(E)	5'-2"	14'-1"
s401(E)	5'-2"	5'-5"
s405(E)	2'-9"	4'-4"
s406(E)	4'-8"	2'-3"
u400(E)	5'-0"	3'-4"
u401(E)	4'-6"	2'-9"

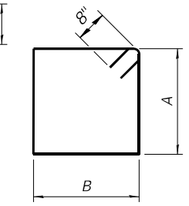

Bar	A	B
s402(E)	3'-9"	2'-9"
s403(E)	4'-0"	2'-9"
s404(E)	4'-2"	2'-9"

BARS s402(E) thru s404(E)

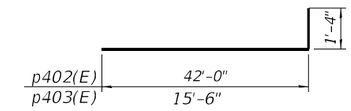

BAR p402(E) & p403(E)

BILL OF MATERIAL

Bar	No.	Size	Length	Shape
h400(E)	50	#6	48'-11"	
h401(E)	2	#5	48'-4"	
h402(E)	12	#5	51'-7"	
h403(E)	8	#5	12'-8"	
p400(E)	8	#8	14'-1"	
p401(E)	8	#8	43'-8"	
p402(E)	8	#8	43'-4"	
p403(E)	8	#8	16'-10"	
s400(E)	99	#7	33'-4"	
s401(E)	99	#7	16'-0"	
s402(E)	4	#6	14'-4"	
s403(E)	4	#6	14'-10"	
s404(E)	4	#6	15'-2"	
s405(E)	252	#6	11'-5"	
s406(E)	14	#5	9'-2"	
sp400 ***	4	#5	38'-11"	
sp401(E) ***	4	#5	14'-11"	
u400(E)	40	#6	11'-8"	
u401(E)	12	#5	10'-0"	
v400	80	#10	38'-9"	
v401(E)	80	#9	27'-2"	
v402(E)	80	#9	18'-4"	
Structure Excavation			Cu. Yd.	86
Concrete Structures			Cu. Yd.	239.3
Reinforcement Bars			Pound	17,600
Reinforcement Bars, Epoxy Coated			Pound	36,590
Permanent Casing			Foot	111
Drilled Shaft in Soil			Cu. Yd.	80.7
Drilled Shaft in Rock			Cu. Yd.	26.0

***Length is height of spiral.

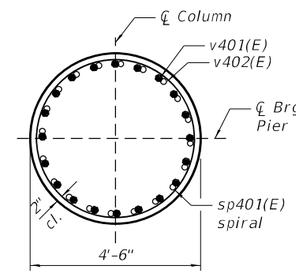

SECTION C-C

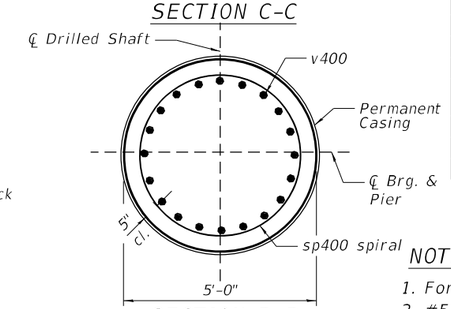

SECTION D-D

NOTES:

1. For Sections A-A & B-B, see sheet S-169.
2. #5 sp400 and #5 sp401(E) - Provide 1½" extra turns, shop welded together per AWS D1.4 top and bottom. Extend spiral 2" into crash wall or pier cap. Provide 4-#4 spacers or equivalent.
3. All edges have a ¾" chamfer, unless noted otherwise.

MODEL: Default
FILE NAME: pw:\\mb-us-pw.bentley.com:mb-us-pw-03\Documents\Chicago IL\01 Projects\179740 IDOT Ceda-SHEA PhII\5.0 CADD\CAD Sheets\0990182-68C55-170-Pier3 2.dgn

Michael Baker INTERNATIONAL
200 W Adams Street
Suite 1800
Chicago, IL 60606
PH: 312.707.8770
FAX: 312.707.8804

USER NAME = DLamb	DESIGNED - YC/DRH	REVISED -	
	CHECKED - EWT	REVISED -	
PLOT SCALE = 0:2.0000 ':" / in.	DRAWN - DCL	REVISED -	
PLOT DATE = 6/6/2023	CHECKED - JMK	REVISED -	

STATE OF ILLINOIS
DEPARTMENT OF TRANSPORTATION

PIER 3 DETAILS
STRUCTURE NO. 090-0182

SHEET S-170 OF S-194 SHEETS

F.A.P. RTE.	SECTION	COUNTY	TOTAL SHEETS	SHEET NO.
VAR.	13 (HVB, HB-3) BR-1;R	TAZEWELL	1173	696

CONTRACT NO. 68C55

ILLINOIS | FED. AID PROJECT

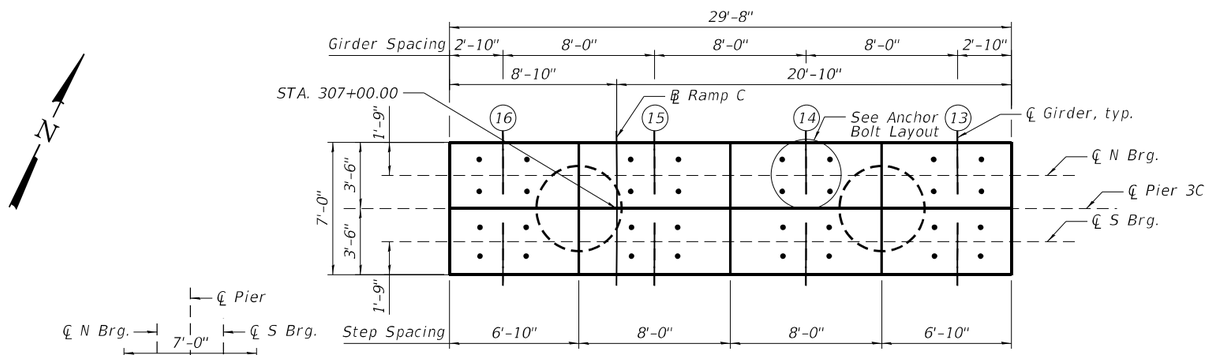

TOP PLAN

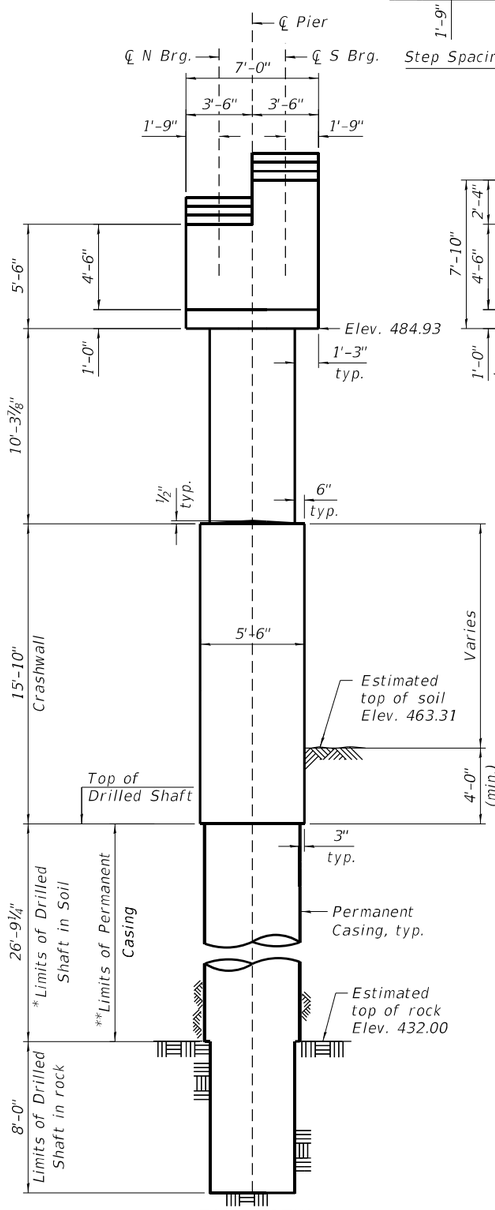

END VIEW

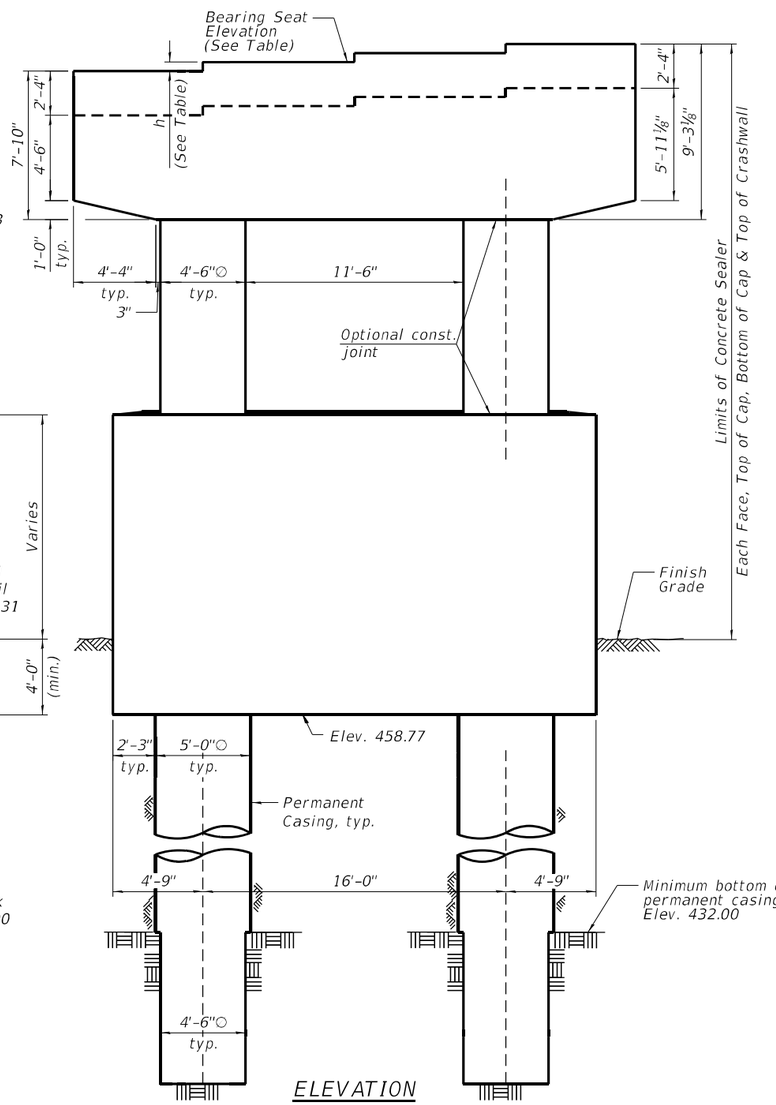

ELEVATION
(Looking Downstation)

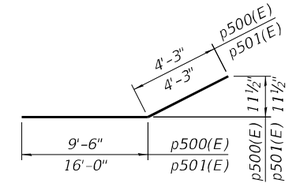

BAR p500(E) & p501(E)

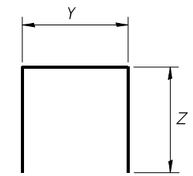

BAR X

X	Y	Z
s500(E)	5'-2"	14'-6"
s501E)	5'-2"	5'-5"
s522(E)	3'-2"	3'-9"
s523(E)	6'-6"	0'-10"
u500(E)	5'-0"	3'-4"
u501(E)	6'-6"	2'-9"
u502(E)	3'-0"	2'-9"

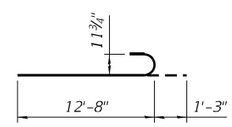

BAR v502(E)

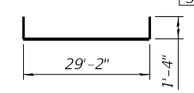

BAR p502(E)

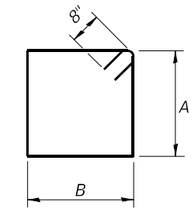

BARS s502(E) thru s521(E)

BAR	A	B
s502(E)	4'-6"	4'-3"
s503(E)	4'-6"	4'-5"
s504(E)	4'-6"	4'-6"
s505(E)	4'-6"	4'-8"
s506(E)	4'-6"	4'-9"
s507(E)	4'-6"	4'-10"
s508(E)	4'-6"	5'-0"
s509(E)	4'-6"	5'-1"
s510(E)	4'-6"	5'-2"
s511(E)	4'-6"	5'-7"
s512(E)	4'-6"	6'-1"
s513(E)	4'-6"	6'-7"
s514(E)	4'-6"	6'-6"
s515(E)	4'-6"	6'-4"
s516(E)	4'-6"	6'-3"
s517(E)	4'-6"	6'-2"
s518(E)	4'-6"	6'-0"
s519(E)	4'-6"	5'-11"
s520(E)	4'-6"	5'-9"
s521(E)	4'-6"	5'-8"

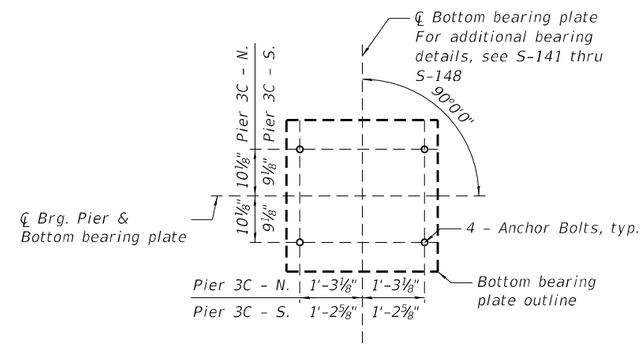

ANCHOR BOLT LAYOUT

* The quantities and reinforcement detailing are based on the top of shaft and the estimated top of rock elevations shown and may change based on the actual top of rock encountered at each shaft and the final top of shaft elevation.

** Contractor is responsible for determining the casing thickness and the actual tip elevation to be used. See Article 516.06(d) of the Standard Specifications. Pay limits for the Permanant Casing shall be based on the minimum length shown. Permanent Casing shall extend into rock as needed if the upper zone of rock is fractured and excessive water inflow is encountered.

BILL OF MATERIAL

	Bar	No.	Size	Length	Shape
	h500(E)	54	#6	25'-2"	
	h501(E)	2	#5	25'-5"	
	h502(E)	21	#5	29'-4"	
	h503(E)	4	#5	22'-6"	
	h504(E)	4	#5	14'-6"	
	h505(E)	18	#5	6'-6"	
	h506(E)	20	#5	7'-10"	
	p500(E)	10	#8	13'-9"	
	p501(E)	10	#8	20'-3"	
	p502(E)	12	#8	31'-10"	
	s500(E)	51	#7	34'-2"	
	s501(E)	51	#7	16'-0"	
	s502(E)	2	#6	18'-10"	
	s503(E)	2	#6	19'-2"	
	s504(E)	2	#6	19'-4"	
	s505(E)	2	#6	19'-8"	
	s506(E)	2	#6	19'-10"	
	s507(E)	2	#6	20'-0"	
	s508(E)	2	#6	20'-4"	
	s509(E)	2	#6	20'-6"	
	s510(E)	10	#6	20'-8"	
	s511(E)	32	#6	21'-6"	
	s512(E)	32	#6	22'-6"	
	s513(E)	10	#6	23'-6"	
	s514(E)	2	#6	23'-4"	
	s515(E)	2	#6	23'-0"	
	s516(E)	2	#6	22'-10"	
	s517(E)	2	#6	22'-8"	
	s518(E)	2	#6	22'-4"	
	s519(E)	2	#6	22'-2"	
	s520(E)	2	#6	21'-10"	
	s521(E)	2	#6	21'-8"	
	s522(E)	58	#6	11'-0"	
	s523(E)	9	#4	8'-4"	
***	sp500	2	#5	35'-0"	
***	sp501(E)	2	#5	10'-6"	
	u500(E)	44	#6	11'-8"	
	u501(E)	17	#5	12'-0"	
	u502(E)	10	#5	8'-6"	
	v500	40	#10	35'-0"	
	v501(E)	40	#10	27'-6"	
	v502(E)	40	#9	13'-11"	
	Structure Excavation			Cu. Yd.	48
	Concrete Structures			Cu. Yd.	150.2
	Reinforcement Bars			Pound	7,940
	Reinforcement Bars, Epoxy Coated			Pound	23,410
	Permanent Casing			Foot	54
	Drilled Shaft in Soil			Cu. Yd.	39.0
	Drilled Shaft in Rock			Cu. Yd.	9.5
	Concrete Sealer			Sq. Yd.	2,027

***Length is height of spiral

BEARING SEAT ELEVATION				
Girder No.	N - Elevation	N - h	S - Elevation	S - h
13	491.86	-	494.19	-
14	491.39	5 5/8"	493.71	5 3/4"
15	490.91	5 3/4"	493.24	5 5/8"
16	490.43	5 3/4"	492.76	5 3/4"

NOTES:

1. Space reinforcement to miss anchor bolts.
2. Pour steps monolithically with cap.
3. For Sections and Details see Sheet S-172.
4. Permanent casing for drilled shafts shall be twisted and pushed until top of bedrock is reached. Any other method should not be allowed. A minimum of 3-foot thick soil plug should be maintained while pushing, twisting and excavating within the casing until top of bedrock is reached.

Michael Baker INTERNATIONAL
200 W Adams Street Suite 1800 Chicago, IL 60606 PH: 312.707.8772 FAX: 312.707.8804

USER NAME = DLamb	DESIGNED - EML	REVISED -	
	CHECKED - EWT	REVISED -	
PLOT SCALE = 0:2.0000 ':" / in.	DRAWN - EML	REVISED -	
PLOT DATE = 6/6/2023	CHECKED - JMK	REVISED -	

STATE OF ILLINOIS
DEPARTMENT OF TRANSPORTATION

PIER 3C PLAN & ELEVATION
STRUCTURE NO. 090-0182

SHEET S-171 OF S-194 SHEETS

F.A.P. RTE.	SECTION	COUNTY	TOTAL SHEETS	SHEET NO.
VAR.	13 (HVB, HB-3) BR-1;R	TAZEWELL	1173	697
		CONTRACT NO. 68C55		
		ILLINOIS FED. AID PROJECT		

MODEL: Default
FILE NAME: pw:\\mbs-us-pw.bentley.com:mb-us-pw-931\Documents\Chicago_IL\01 Projects\179740 IDOT Cedar\SIE+1 PHII5.0 CADD\CAD Sheets\0900182-68C55-171-Pier3C_1.dgn

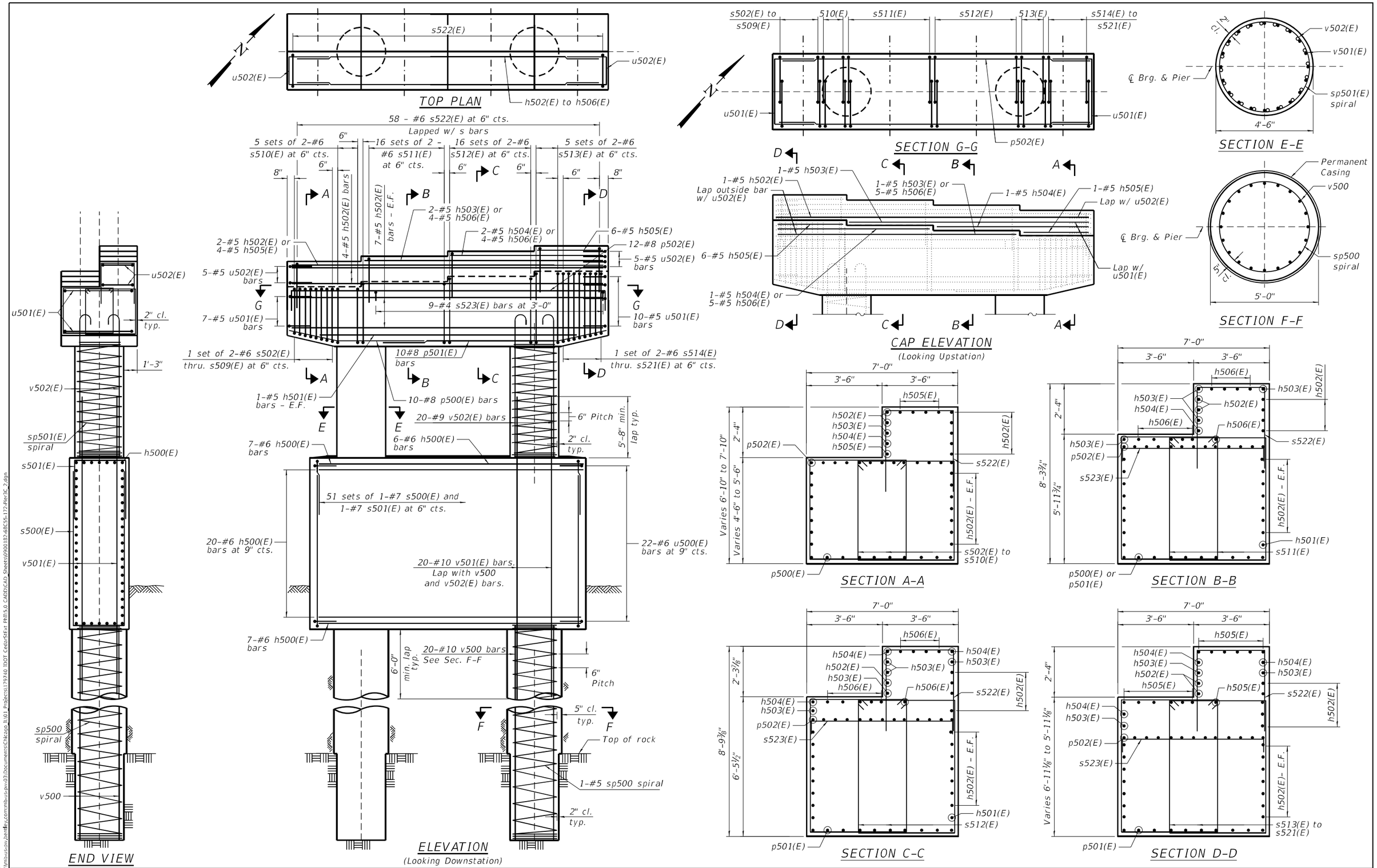

MODEL: Default
FILE NAME: pw:\\mis-iis-pw.bentley.com:mb-iis-pw-03\Documents\Chicago_IL\01 Projects\179740 IDOT Cedar SIEx1 PhII\5.0 CADD\CAD_Sheet\0900182-68C55-172-Pier3C_2.dgn

Michael Baker INTERNATIONAL
200 W Adams Street
Suite 1850
Chicago, IL 60606
PH: 312.707.8775
FAX: 312.707.8804

USER NAME = DLamb	DESIGNED - EML	REVISED -	
	CHECKED - EWT	REVISED -	
PLOT SCALE = 0:2.0000 ':" / in.	DRAWN - EML	REVISED -	
PLOT DATE = 6/6/2023	CHECKED - JMK	REVISED -	

STATE OF ILLINOIS
DEPARTMENT OF TRANSPORTATION

PIER 3C DETAILS
STRUCTURE NO. 090-0182

SHEET S-172 OF S-194 SHEETS

F.A.P. RTE.	SECTION	COUNTY	TOTAL SHEETS	SHEET NO.
VAR.	13 (HVB, HB-3) BR-1;R	TAZEWELL	1173	698
		CONTRACT NO. 68C55		
		ILLINOIS	FED. AID PROJECT	

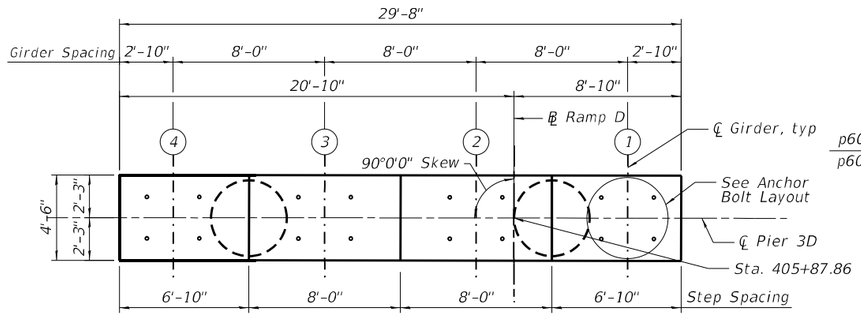

TOP PLAN

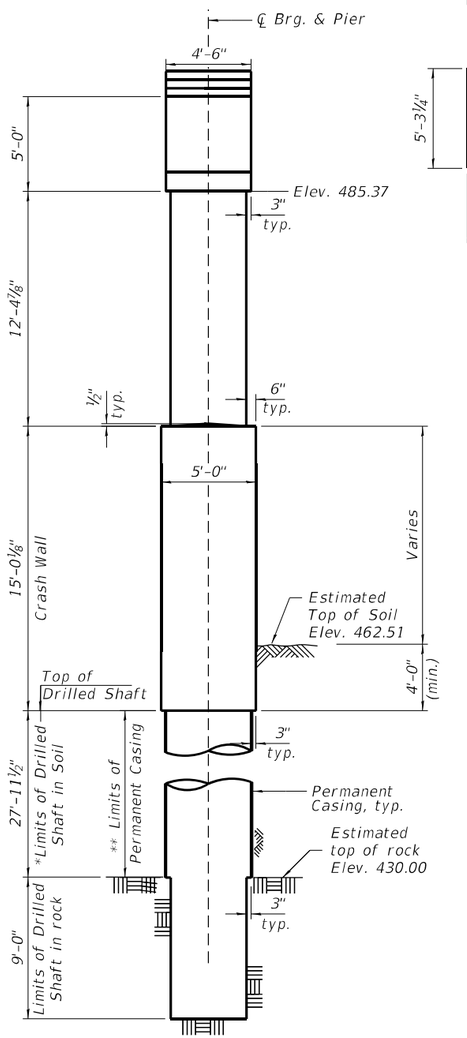

END VIEW

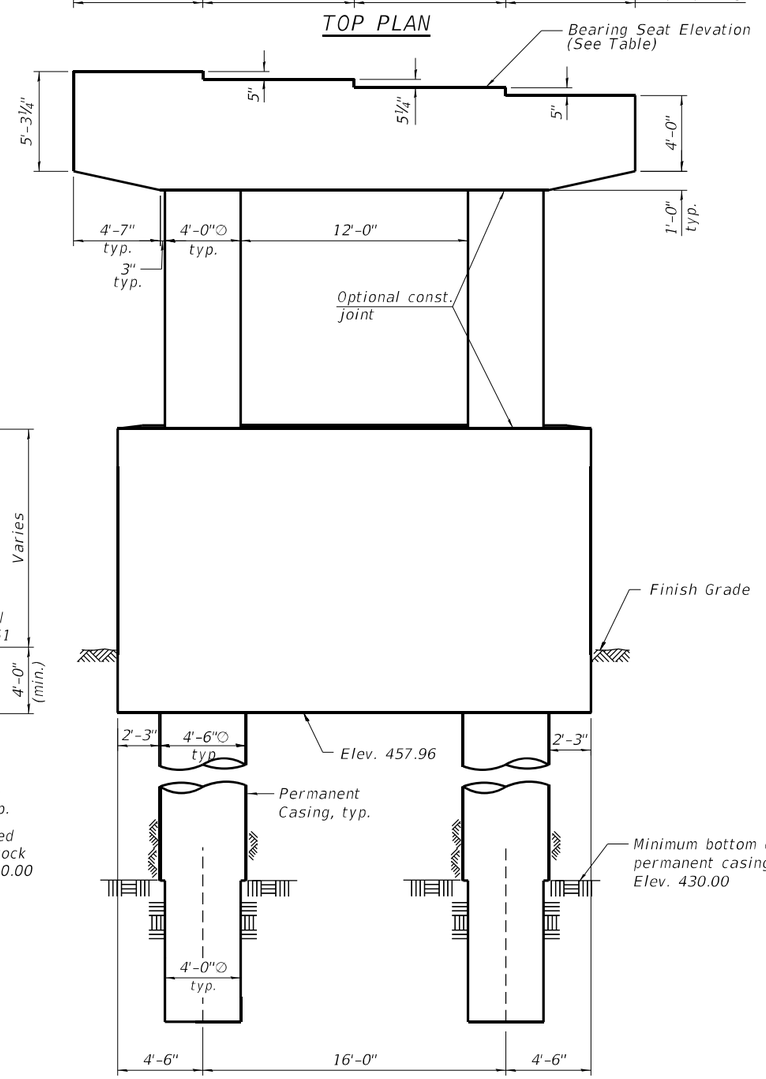

ELEVATION
(Looking Downstation)

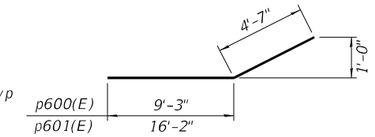

BAR p600(E) & p601(E)

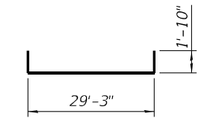

BAR p602(E)

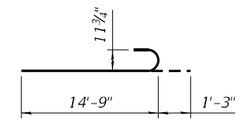

BAR v602(E)

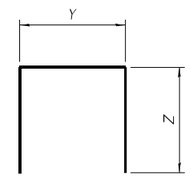

X	Y	Z
s600(E)	4'-8"	14'-2"
s601(E)	4'-8"	4'-11"
s608(E)	2'-9"	4'-4"
s609(E)	2'-9"	4'-11"
s610(E)	4'-2"	0'-10"
u600(E)	4'-6"	3'-4"
u601(E)	4'-0"	2'-9"

BAR X

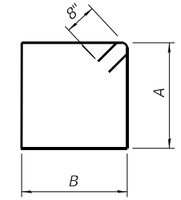

BAR	A	B
s602(E)	3'-9"	2'-9"
s603(E)	3'-10"	2'-9"
s604(E)	3'-11"	2'-9"
s605(E)	4'-1"	2'-9"
s606(E)	4'-2"	2'-9"
s607(E)	4'-3"	2'-9"

BAR s602(E) thru s607(E)

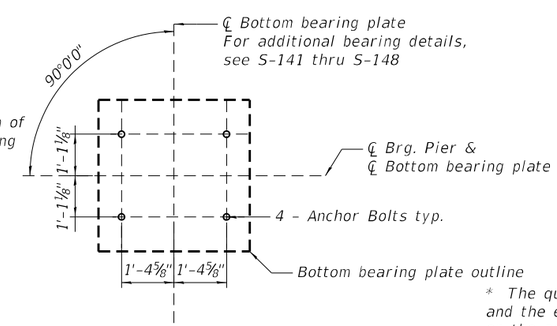

ANCHOR BOLT LAYOUT

BILL OF MATERIAL

	Bar	No.	Size	Length	Shape
	h600(E)	48	#6	24'-8"	
	h601(E)	2	#5	25'-2"	
	h602(E)	10	#5	29'-2"	
	h603(E)	2	#5	27'-3"	
	h604(E)	2	#5	16'-9"	
	h605(E)	2	#5	6'-4"	
	h606(E)	7	#5	6'-1"	
	h607(E)	7	#5	6'-9"	
	h608(E)	14	#5	6'-6"	
	p600(E)	8	#8	13'-10"	
	p601(E)	8	#8	20'-9"	
	p602(E)	7	#10	32'-11"	
	s600(E)	51	#7	33'-0"	
	s601(E)	51	#7	14'-6"	
	s602(E)	2	#6	14'-4"	
	s603(E)	2	#6	14'-6"	
	s604(E)	2	#6	14'-8"	
	s605(E)	2	#6	15'-0"	
	s606(E)	2	#6	15'-2"	
	s607(E)	2	#6	15'-4"	
	s608(E)	32	#6	11'-5"	
	s609(E)	180	#6	12'-7"	
	s610(E)	10	#4	5'-10"	
***	sp600	2	#5	37'-2"	
***	sp601(E)	2	#5	12'-7"	
	u600(E)	38	#6	11'-2"	
	u601(E)	13	#5	9'-6"	
	v600	32	#10	37'-0"	
	v601(E)	32	#9	26'-8"	
	v602(E)	32	#9	16'-0"	
	Structure Excavation			Cu. Yd.	44
	Concrete Structures			Cu. Yd.	108.3
	Reinforcement Bars			Pound	6,890
	Reinforcement Bars, Epoxy Coated			Pound	19,390
	Permanent Casing			Foot	56
	Drilled Shaft in Soil			Cu. Yd.	33.0
	Drilled Shaft in Rock			Cu. Yd.	8.4

***Length is height of spiral

BEARING SEAT ELEVATION	
Girder No.	Elevation
1	490.37
2	490.79
3	491.22
4	491.64

NOTES:

1. Space reinforcement to miss anchor bolts.
2. Pour steps monolithically with cap.
3. For Sections and Details, see Sheet S-174.
4. Permanent casing should be twisted and pushed until top of bedrock is reached. Any other method should not be allowed. A minimum of 3-foot thick soil plug should be maintained while pushing, twisting and excavating within the casing until top of bedrock is reached.

* The quantities and reinforcement detailing are based on the top of shaft and the estimated top of rock elevations shown and may change based on the actual top of rock encountered at each shaft and the final top of shaft elevation.

** Contractor is responsible for determining the casing thickness and the actual tip elevation to be used. See Article 516.06(d) of the Standard Specifications. Pay limits for the Permanent Casing shall be based on the minimum length shown. Permanent Casing shall extend into rock as needed if the upper zone of rock is fractured and excessive water inflow is encountered.

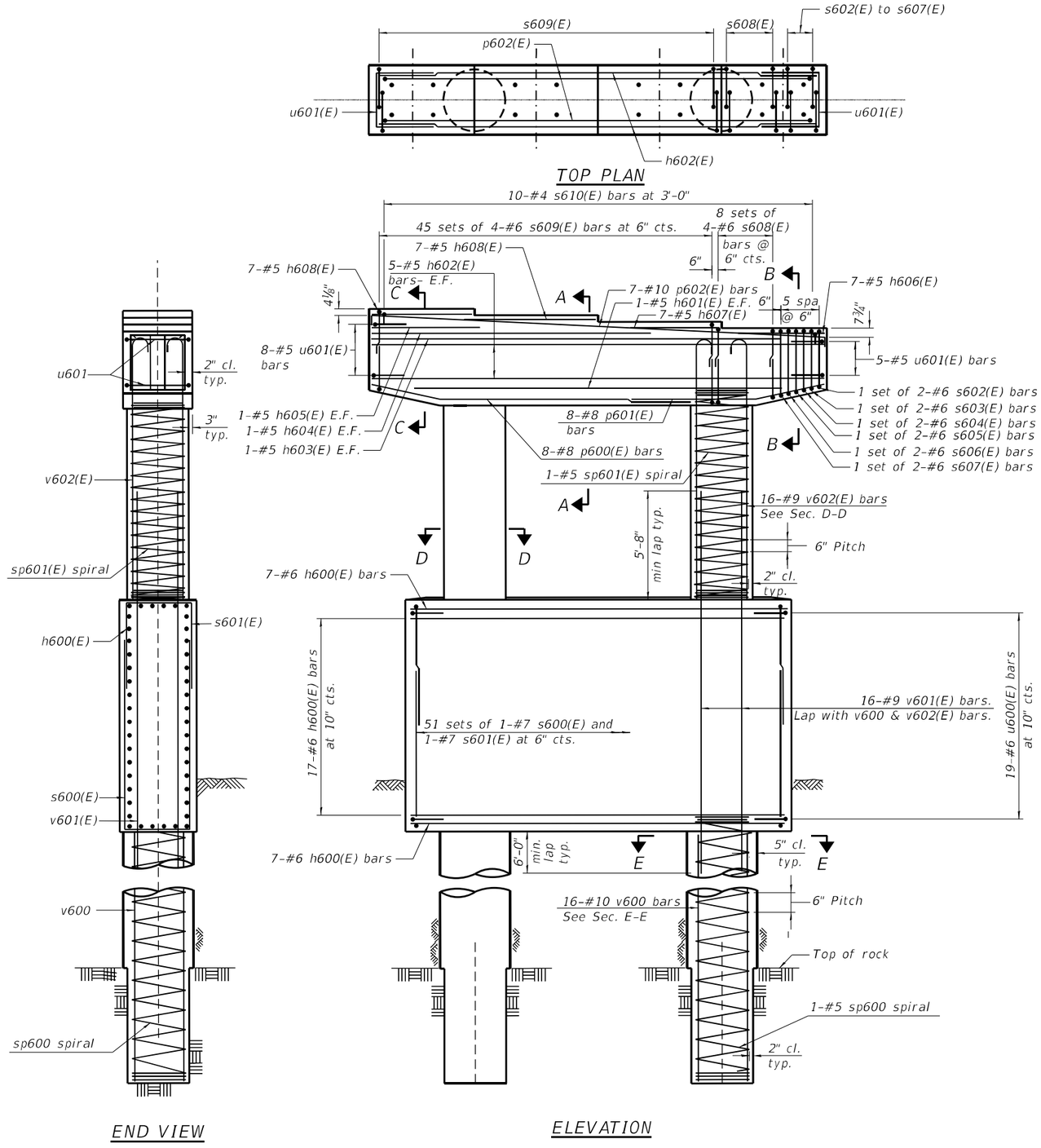

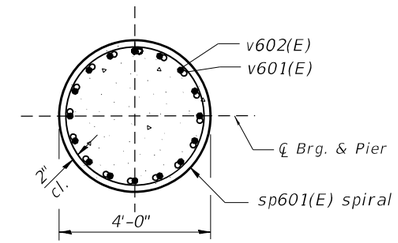

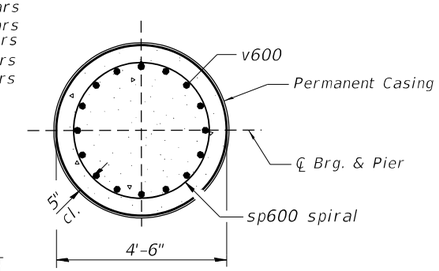

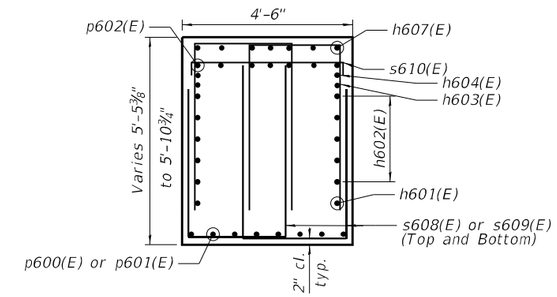

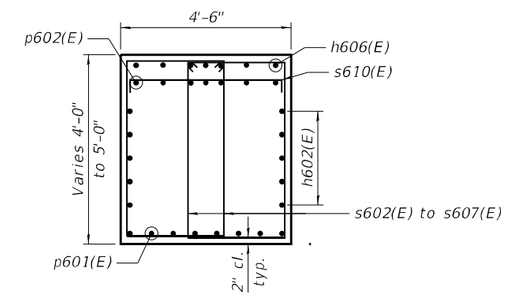

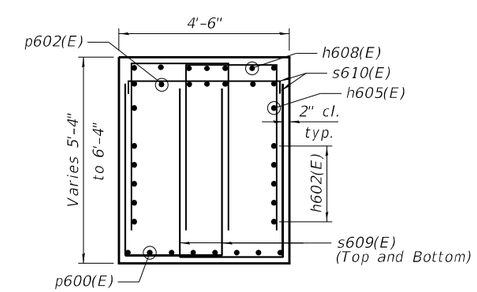

NOTES:

1. #5 sp600 and #5 sp601(E) - Provide 1½ extra turns, shop welded together per AWS D1.4 top and bottom. Extend spiral 2" into crash wall or pier cap. Provide 4-#4 spacers or equivalent.

2. All edges have a ¾" chamfer, unless noted otherwise.

Michael Baker INTERNATIONAL
200 W Adams Street
Suite 1800
Chicago, IL 60606
P: 312.707.8770
FAX: 312.707.8804

USER NAME = DLamb	DESIGNED - EWT/DRH	REVISED -	
	CHECKED - YC	REVISED -	
PLOT SCALE = 0:2.0000 ':" / in.	DRAWN - DCL	REVISED -	
PLOT DATE = 6/6/2023	CHECKED - JMK	REVISED -	

STATE OF ILLINOIS
DEPARTMENT OF TRANSPORTATION

PIER 3D DETAILS
STRUCTURE NO. 090-0182

SHEET S-174 OF S-194 SHEETS

F.A.P. RTE.	SECTION	COUNTY	TOTAL SHEETS	SHEET NO.
VAR.	13 (HVB, HB-3) BR-1:R	TAZEWELL	1173	700
		CONTRACT NO. 68C55		
	ILLINOIS	FED. AID PROJECT		