08-01-2025 LETTING ITEM 01X
REVIEW & INSPECT ONLY

| F.A.P. RTE. | SECTION | COUNTY | TOTAL SHEETS | SHEET NO. |
|---|---|---|---|---|
| VAR. | 13 (HVB, HB-3) BR-1;R | TAZEWELL | 1173 | 1 |
| | ILLINOIS | CONTRACT NO. 68C55 | | |

# STATE OF ILLINOIS
# DEPARTMENT OF TRANSPORTATION

# PROPOSED HIGHWAY PLANS

## FAP ROUTE 669/673 (IL-8/IL-116)/(US24/IL29)
## SECTION 13[(HVB,HB-3)] BR-1;R
## PROJECT NHPP-7VBW(880)
## BRIDGE REPLACEMENT AND INTERCHANGE IMPROVEMENTS
## TAZEWELL COUNTY

C-94-074-15

D-94-036-15


LOCATION OF SECTION INDICATED THUS:-

FOR INDEX OF SHEETS, SEE SHEET NO. 3

DESIGN DESIGNATION

FUNCTIONAL CLASSIFICATION
URBAN OTHER PRINCIPAL ARTERIAL

TRAFFIC DATA

CEDAR ST. EXTENSION
ESTIMATED ADT = 11800 (2021)
2.63% SU = 300
3.29% MU = 375

MAIN ST. (WESLEY RD. TO CEDAR ST.)
ESTIMATED ADT = 20500 (2021)
4.58% SU = 1025
1.79% MU = 400

MAIN ST. (CEDAR ST. TO WASHINGTON ST.)
ESTIMATED ADT = 26200 (2021)
1.82% SU = 525
1.48% MU = 425

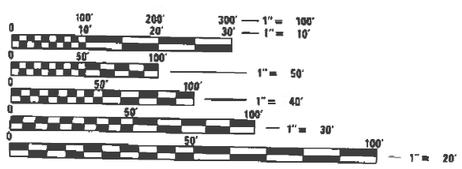


FULL SIZE PLANS HAVE BEEN PREPARED USING STANDARD ENGINEERING SCALES. REDUCED SIZED PLANS WILL NOT CONFORM TO STANDARD SCALES. IN MAKING MEASUREMENTS ON REDUCED PLANS, THE ABOVE SCALES MAY BE USED.

J.U.L.I.E.
JOINT UTILITY LOCATION INFORMATION FOR EXCAVATION
1-800-892-0123
OR 811

PROJECT ENGINEER: DAVID BROVIAK (309) 671-3493
PROJECT MANAGER: ELIAS ELDERZI (309) 671-3482

CATALOG NO. 035206-00D
CONTRACT NO. 68C55

LOCATION MAP
(NOT TO SCALE)

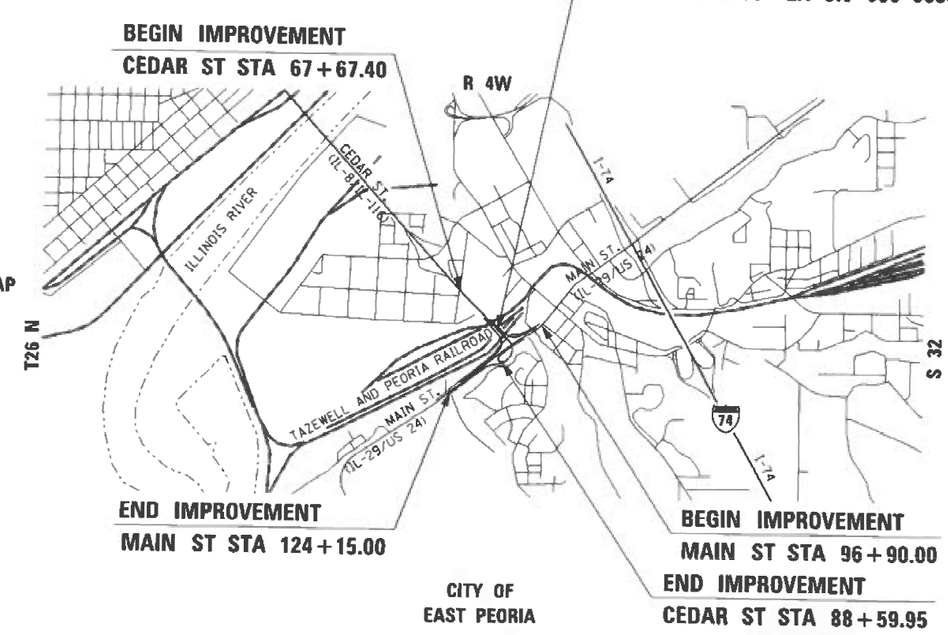


BRIDGE REPLACEMENT
PR SN 090-0182 EX SN 090-0034
PR SN 090-0183 EX SN 090-0035

GROSS LENGTH = 4817.55 FT. = 0.912 MILE
NET LENGTH = 4817.55 FT. = 0.912 MILE

Michael Baker
INTERNATIONAL

SN 090-8517 – RETAINING WALL A
FUTURE MUP STA. 51+54.43 TO STA. 66+64.32
SN 090-8520 – RETAINING WALL D
RAMP B STA. 288+60.00 TO STA. 301+03.19
SN 090-8518 – RETAINING WALL E
SILVER ST. STA. 21+69.50 TO STA. 22+65.90

STATE OF ILLINOIS
DEPARTMENT OF TRANSPORTATION

SUBMITTED May 9 20 25
Dana A. Garrett
REGIONAL ENGINEER

June 27 20 25
ENGINEER OF DESIGN AND ENVIRONMENT

June 27 20 25
DIRECTOR OF HIGHWAYS PROJECT IMPLEMENTATION

PRINTED BY THE AUTHORITY
OF THE STATE OF ILLINOIS

STATE OF ILLINOIS
MARY LOUISE KUTSKA
081-008008
LICENSED STRUCTURAL ENGINEER

SIGNED: Mary Kutska

Mary Louise Kutska
Il. Lic. No. 081-008008
Expires 11-30-2024

DATE: 6/8/2023

FOR SHEETS: S2-5 THRU S2-30 & S3-1 THRU S3-38

STATE OF ILLINOIS
PANKAJ KUMAR
081-007577
LICENSED STRUCTURAL ENGINEER

SIGNED: Pankaj Kumar

Pankaj Kumar
Il. Lic. No. 081-007577
Expires 11-30-2024

DATE: 6/8/2023

FOR SHEETS: S2-1 THRU S2-4, S2-31 THRU S2-47

STATE OF ILLINOIS
JOSEPH M. KAUZLARICH
081-007934
LICENSED STRUCTURAL ENGINEER

SIGNED:

Joseph Kauzlarich
Il. Lic. No. 081-007934
Expires 11-30-2024

DATE: 6/8/2023

FOR SHEETS: S-1 THRU S-194, S4-1 THRU S4-29 & S6-1 THRU S6-6

STATE OF ILLINOIS
KENNETH P. SMORYNSKI
081-005763
LICENSED STRUCTURAL ENGINEER

SIGNED: Ken Smorynski

Kenneth P. Smorynski
Il. Lic. No. 081-005763
Expires 11-30-2024

DATE: 6/8/2023

FOR SHEETS: S5-1 THRU S5-6

LICENSED PROFESSIONAL ENGINEER
RASHESHKUMAR PATEL
062-064617
STATE OF ILLINOIS

SIGNED: Rashesh Patel

Rashesh Kumar Patel
Il. Lic. No. 062-064617
Expires 11-30-2025

DATE: 5/9/2025

FOR SHEETS: LT-01 THRU 15

LICENSED PROFESSIONAL ENGINEER
ROBERT BRZEZON
062-066618
OF ILLINOIS

SIGNED: Robert Brzezon

Robert Brzezon
Il. Lic. No. 062-066618
Expires 11-30-2025

DATE: 5/9/2025

FOR SHEETS: GEN-01 & 02, SOQ-01 THRU 26, TYP-01 THRU 18, ALG-01 THRU 05, REM-01 THRU 11, RDY-01 THRU 22, PRO-01 THRU 22, RDYPP-01, MUP-01 THRU 05, MUP-PRO-01 THRU 05, DET-01,02,03, 13,14, DETOUR-01 THRU 06, GRD-01 THRU 11, XS-CEDAR, XS-RAMP A, XS-RAMP B, XS-RAMP C, XS-RAMP D, XS-MAIN, XS-SILVER, XS-FUTURE MUP

JAMES A. LEVAN
062-050422
LICENSED PROFESSIONAL ENGINEER OF
STATE OF ILLINOIS

SIGNED:

James LeVan
Il. Lic. No. 062-050422
Expires 11-30-2023

DATE: 6/8/2023

FOR SHEETS: ~~SOQ-01 THRU 26~~, SCHOQ-01 THRU 14, DET-04 THRU 12, MOT-01 THRU 117, ~~DETOUR-01 THRU 06~~, PJE-01 THRU 12

LICENSED PROFESSIONAL ENGINEER
STEPHEN J. MANHART
062-057714
OF ILLINOIS

SIGNED:

Stephen Manhart
Il. Lic. No. 062-057714
Expires 11-30-2023

DATE: 6/8/2023

FOR SHEETS: PMK-01 THRU 13, SGN-SHT-01 THRU 08, SGN-SCH-01 THRU 04, SCHOQ-13

LICENSED PROFESSIONAL ENGINEER
MICHAEL J. ROSBORG
062-058028
STATE OF ILLINOIS

SIGNED: Michael J. Rosborg

Michael J. Rosborg
Il. Lic. No. 062-058028
Expires 11-30-2025

DATE: 5/9/2025

FOR SHEETS: EC-01 THRU 18, EXDRAIN-01 THRU 24, PRDRAIN-01 THRU 24, DRAINPRF-01 THRU 05

LICENSED PROFESSIONAL ENGINEER
HUSSAIN ALI ALHASSANALSAYED
062-072892
OF ILLINOIS

SIGNED:

Hussain A Alhassanalsayed
Il. Lic. No. 062-072892
Expires 11-30-2025

DATE: 5/9/2025

FOR SHEETS: LNDSCP-01 THRU 11

DEREK A. S. HUFFMAN
No. 3899
PROFESSIONAL LAND SURVEYOR
STATE OF ILLINOIS
MORTON, ILLINOIS

SIGNED:

Derek A.S. Huffman
Il. Lic. No. 035-003899
Expires 11-30-2024

DATE: 6/8/2023

FOR SHEETS: ROW-01 THRU ROW-03

PE-SEAL-01

Michael Baker INTERNATIONAL
200 W Adams Street
Suite 1800
Chicago, IL 60606
PH: 312.707.8772
FAX: 312.707.8804

| | | | |
|---|---|---|---|
| USER NAME = | DESIGNED - SAS | REVISED - | |
| | DRAWN - DCL | REVISED - | |
| PLOT SCALE = 2.0000 ' / in. | CHECKED - RBB | REVISED - | |
| PLOT DATE = 05/01/2025 | DATE - 05/09/2025 | REVISED - | |

STATE OF ILLINOIS
DEPARTMENT OF TRANSPORTATION

CEDAR ST. (IL-8/IL-116) OVER TZPR & IL-29
ENGINEERING SEALS

SCALE: NONE | SHEET OF SHEETS | STA. TO STA.

| F.A.P. RTE. | SECTION | COUNTY | TOTAL SHEETS | SHEET NO. |
|---|---|---|---|---|
| VAR. | 13 (HVB, HB-3) BR-1;R | TAZEWELL | 1173 | 2 |
| | | CONTRACT NO. 68C55 | | |
| | | ILLINOIS FED. AID PROJECT | | |

MODEL: Default
FILE NAME: pw:\\mis-is-pw.bentley.com:mb-is-pw-03\Documents\Chicago_IL\01 Projects\179740 IDOT Cedar\SIEx1 Phase 3.0 CADD\CAD Sheets\0468C55-sht-engsignature.dgn

## INDEX OF SHEETS:


| SHEET NO. | SHEET TITLE |
|---|---|
| 1 | COVER SHEET |
| 2 | ENGINEERING SEALS |
| 3 | INDEX OF SHEETS, STATE & DISTRICT STANDARDS |
| 4 - 5 | GENERAL NOTES |
| 6 - 7 | STATUS OF UTILITIES TO BE ADJUSTED |
| 8 - 33 | SUMMARY OF QUANTITIES |
| 34 - 38 | EXISTING TYPICAL SECTIONS |
| 39 - 51 | PROPOSED TYPICAL SECTIONS |
| 52 - 65 | SCHEDULE OF QUANTITIES |
| 66 - 70 | ALIGNMENT, TIES & BENCHMARKS |
| 71 - 81 | REMOVAL PLANS |
| 82 - 103 | PROPOSED ROADWAY PLANS |
| 104 - 125 | PROPOSED ROADWAY PROFILES |
| 126 - 126 | PROPOSED JOHNSON ST & PEKIN AVE PLAN & PROFILES |
| 127 - 131 | FUTURE MULTI-USE PATH PLANS |
| 132 - 136 | FUTURE MULTI-USE PATH PROFILES |
| 137 - 150 | ROADWAY DETAILS |
| 151 - 267 | MAINTENANCE OF TRAFFIC |
| 268 - 273 | DETOUR PLAN |
| 274 - 275 | EROSION CONTROL SCHEDULE |
| 276 - 293 | EROSION AND SEDIMENT CONTROL PLANS |
| 294 - 295 | DRAINAGE - REMOVAL SCHEDULE |
| 296 - 299 | DRAINAGE - PROPOSED SCHEDULE |
| 300 - 323 | DRAINAGE - EXISTING AND UTILITY PLANS |
| 324 - 347 | DRAINAGE - PROPOSED PLANS |
| 348 - 352 | DRAINAGE - PROPOSED PROFILES |
| 353 - 357 | SANITARY |
| 358 - 368 | GRADING PLANS AND DETAILS |
| 369 - 371 | RIGHT OF WAY PLANS |
| 372 - 383 | PAVEMENT JOINTING PLANS |
| 384 - 396 | PAVEMENT MARKING PLANS |
| 397 - 407 | LANDSCAPING PLANS |
| 408 - 411 | SIGNING SCHEDULES |
| 412 - 419 | SIGNING PLANS |
| 420 - 434 | LIGHTING PLANS |
| 435 - 441 | ITS PLANS |
| 442 - 526 | EXISTING STRUCTURE PLANS |
| 527 - 720 | SN 090-0182-CEDAR ST. (IL-8/IL-116) OVER TZPR |
| 721 - 767 | SN 090-0183-CEDAR ST. (IL-8/IL-116) OVER MAIN ST. |
| 768 - 805 | SN 090-8517 - RETAINING WALL A |
| 806 - 834 | SN 090-8520 - RETAINING WALL D |
| 835 - 840 | SN 090-8518 - RETAINING WALL E |
| 841 - 846 | RETAINING WALL ALONG DITCH |
| 847 - 876 | DISTRICT DETAILS |
| 877 - 937 | CROSS SECTIONS - CEDAR STREET |
| 938 - 948 | CROSS SECTIONS - RAMP A |
| 949 - 980 | CROSS SECTIONS - RAMP B |
| 981 - 1017 | CROSS SECTIONS - RAMP C |
| 1018 - 1038 | CROSS SECTIONS - RAMP D |
| 1039 - 1128 | CROSS SECTIONS - MAIN STREET |
| 1129 - 1135 | CROSS SECTIONS - SILVER STREET |
| 1136 - 1173 | CROSS SECTIONS - FUTURE MUP |
| | HIGHWAY STANDARDS |


## HIGHWAY STANDARDS:

| STD. NO. | DESCRIPTION |
|---|---|
| 000001-08 | STANDARD SYMBOLS, ABBREVIATIONS AND PATTERNS |
| 001001-02 | AREAS OF REINFORCEMENT BAR |
| 001006 | DECIMAL OF AN INCH AND OF A FOOT |
| 280001-07 | TEMPORARY EROSION CONTROL SYSTEMS |
| 420001-10 | PAVEMENT JOINTS |
| 420101-07 | 24' (7.2M) JOINTED PCC PAVEMENT |
| 420106-07 | 36' (10.8M) JOINTED PCC PAVEMENT |
| 420111-04 | PCC PAVEMENT ROUNDOUTS |
| 420201-12 | ENTRANCE RAMP TERMINAL (JOINTED PCC RAMP PAVT. ADJACENT TO JOINTED PCC MAINLINE PAVT.) |
| 420301-09 | EXIT RAMP TERMINAL (JOINTED PCC RAMP PAVT. ADJACENT TO JOINTED PCC MAINLINE PAVT.) |
| 420401-13 | PAVEMENT CONNECTOR (PCC) FOR BRIDGE APPROACH SLAB |
| 420701-03 | PAVEMENT WELDED WIRE REINFORCEMENT |
| 424001-12 | PERPENDICULAR CURB RAMPS FOR SIDEWALKS |
| 424011-05 | CORNER PARALLEL CURB RAMPS FOR SIDEWALKS |
| 424016-06 | MID-BLOCK CURB RAMPS FOR SIDEWALKS |
| 424031-03 | MEDIAN PEDESTRIAN CROSSINGS |
| 483001-06 | PCC SHOULDER |
| 515001-04 | NAME PLATE FOR BRIDGES |
| 542301-03 | PRECAST REINFORCED CONCRETE FLARED END SECTION |
| 542311-07 | TRAVERSABLE PIPE GRATE FOR CONCRETE END SECTION |
| 601001-05 | PIPE UNDERDRAINS |
| 602301-04 | INLET TYPE A |
| 602401-07 | PRECAST MANHOLE TYPE A 4' (1.22M) DIAMETER |
| 602402-03 | PRECAST MANHOLE TYPE A 5' (1.52M) DIAMETER |
| 602406-11 | PRECAST MANHOLE TYPE A, 6' DIAMETER |
| 602411-09 | PRECAST MANHOLE TYPE A, 7' (2.13m) DIAMETER |
| 602416-09 | PRECAST MANHOLE TYPE A, 8' (2.44m) DIAMETER |
| 602421-09 | PRECAST MANHOLE TYPE A, 9' (2.74m) DIAMETER |
| 602426-03 | PRECAST MANHOLE TYPE A, 10' (3.05m) DIAMETER |
| 602601-06 | PRECAST REINFORCED CONCRETE FLAT TOP SLAB |
| 602701-02 | MANHOLE STEPS |
| 606001-08 | CONCRETE CURB TYPE B AND COMBINATION CONCRETE CURB AND GUTTER |
| 606006-04 | OUTLETS FOR CONCRETE CURB AND GUTTER TYPE B-6.24 (B-15.60) |
| 606301-04 | PC CONCRETE ISLANDS AND MEDIANS |
| 606401-02 | PAVED DITCH |
| 630001-13 | STEEL PLATE BEAM GUARDRAIL |
| 630301-09 | SHOULDER WIDENING FOR TYPE 1 (SPECIAL) GUARDRAIL TERMINALS |
| 631011-10 | TRAFFIC BARRIER TERMINAL, TYPE 2 |
| 631026-06 | TRAFFIC BARRIER TERMINAL, TYPE 5 |
| 631031-18 | TRAFFIC BARRIER TERMINAL, TYPE 6 |
| 635001-02 | DELINEATORS |
| 664001-02 | CHAIN LINK FENCE |
| 666001-01 | RIGHT OF WAY MARKERS |
| 701101-05 | OFF-ROAD OPERATIONS, MULTILANE, 15" TO 24" FROM EDGE OF PAVEMENT |
| 701106-02 | OFF-RD OPERATIONS, MULTILANE, MORE THAN 15' (4.5 m) AWAY |
| 701411-09 | LANE CLOSURE, MULTILANE, AT ENTRANCE OR EXIT RAMP, SPEEDS >= 45 MPH |
| 701422-10 | LANE CLOSURE, MULTILANE, SPEEDS >= 45 MPH TO 55 MPH |
| 701423-10 | LANE CLOSURE, MULTILANE, WITH BARRIER, SPEEDS >= 45 MPH TO 55 MPH |
| 701426-09 | LANE CLOSURE, MULTILANE, DAY INTERMITTENT OR MOVING OPER >= 45 MPH |
| 701427-05 | LANE CLOSURE, MULTILANE, DAY INTERMITTENT OR MOVING OPER <= 45 MPH |
| 701451-05 | RAMP CLOSURE FREEWAY/EXPRESSWAY |
| 701456-05 | PARTIAL EXIT RAMP CLOSURE FREEWAY/EXPRESSWAY |
| 701601-09 | URBAN LANE CLOSURE, MULTILANE, 1W OR 2W WITH NONTRAVERSABLE MEDIAN |
| 701606-10 | URBAN SINGLE LANE CLOSURE, MULTILANE, 2W WITH MOUNTABLE MEDIAN |
| 701611-01 | URBAN HALF ROAD CLOSURE, MULTILANE, 2W WITH MOUNTABLE MEDIAN |
| 701701-10 | URBAN LANE CLOSURE, MULTILANE INTERSECTION |
| 701801-06 | SIDEWALK, CORNER OR CROSSWALK CLOSURE |
| 701901-10 | TRAFFIC CONTROL DEVICES |
| 704001-08 | TEMPORARY CONCRETE BARRIER |
| 720001-01 | SIGN PANEL MOUNTING DETAILS |
| 720006-04 | SIGN PANEL ERECTION DETAILS |
| 720011-01 | METAL POSTS FOR SIGNS, MARKERS & DELINEATORS |
| 725001-01 | OBJECT AND TERMINAL MARKERS |
| 728001-01 | TELESCOPING STEEL SIGN SUPPORT |
| 729001-01 | APPLICATION OF TYPES A & B METAL POSTS (FOR SIGNS & MARKERS) |
| 731001-01 | BASE FOR TELESCOPING STEEL SIGN SUPPORT |
| 780001-05 | TYPICAL PAVEMENT MARKINGS |
| 781001-04 | TYPICAL APPLICATIONS RAISED REFLECTIVE PAVEMENT MARKERS |
| 782006-01 | GUARDRAIL AND BARRIER WALL REFLECTOR MOUNTING DETAILS |
| 812001-01 | RACEWAY EMBEDDED IN STRUCTURE |
| 821101-03 | LUMINAIRE WIRING IN POLE |
| 825001-04 | LIGHTING CONTROLLER POLE MOUNTED, 240V |
| 825021-04 | LIGHTING CONTROLLER BASE MOUNTED, 240V |
| 830006-05 | LIGHT POLE ALUMINUM DAVIT ARM |
| 830026-01 | TEMPORARY ROADWAY LIGHTING |
| 836001-05 | LIGHT POLE FOUNDATION |
| 838001-01 | BREAKAWAY DEVICES |
| BLR 21-9 | TYPICAL APPLICATION OF TRAFFIC CONTROL DEVICES FOR CONSTRUCTION ON RURAL LOCAL HIGHWAYS |
| BLR 22-7 | CONTROL DEVICES FOR CONSTRUCTION TYPICAL APPLICATION OF TRAFFIC ON RURAL LOCAL HIGHWAYS |

## DISTRICT 4 STANDARDS:

| STD. NO. | STANDARD TITLE |
|---|---|
| 205001-D4 | SLOPE STEPS DETAIL |
| 406101-D4 | BUTT JOINTS |
| 406501-D4 | URBAN SIDEROADS FOR "3R" PROJECTS |
| 420401-D4 | BRIDGE APPROACH DETAIL |
| 423002-D4 | URBAN ENTRANCES WITHOUT SIDEWALKS |
| 423101-D4 | URBAN ENTRANCES, ACCESSIBLE TO THE DISABLED, FOR CURBLINE |
| 424101-D4 | COMBINATION CONCRETE CURB-SIDEWALK 4" |
| 424106-D4 | COMBINATION CONCRETE CURB-SIDEWALK 4" (SPECIAL) |
| 601001-D4 | UNDERDRAIN OUTLET PROTECTION |
| 602001-D4 | INLETS, TYPE G-1 |
| 602006-D4 | INLETS, TYPE G-1, SPECIAL |
| 602011-D4 | INLETS, TYPE G-1, DOUBLE |
| 602016-D4 | INLETS, TYPE G-1, DOUBLE, SPECIAL |
| 602021-D4 | INLET-MANHOLE, TYPE G-1 |
| 602101-D4 | PRECAST REINFORCED CONCRETE FLAT SLAB TOP FOR INLET-MANHOLE, TYPE G-1 AND G-1, SPECIAL |
| 604001-D4 | FRAME AND GRATES FOR TYPE G-1 AND TYPE G-1, SPECIAL DRAINAGE STRUCTURES |
| 604301-D4 | TYPE 37 GRATE |
| 606101-D4 | CONCRETE GUTTER TYPE A, (SPECIAL) (INLET, OUTLET & ENTRANCES) |
| 630101-D4 | GUARDRAIL EROSION CONTROL TREATMENTS |
| 667101-D4 | PERMANENT SURVEY TIE & PERMANENT SURVEY MARKERS TYPE I & TYPE II |
| 701301-D4 | NIGHTTIME LIGHTING INSPECTION |
| 780001-D4 | TYPICAL PAVEMENT MARKINGS |

## GENERAL NOTES:

SOIL REPORT AVAILABILITY:
THE SOILS REPORT AND ALL SOILS DATA COLLECTED AND PROCESSED IN CONJUNCTION WITH THE DESIGN OF THIS IMPROVEMENT IS ON FILE AT THE DISTRICT OFFICE WHERE IT IS AVAILABLE FOR INSPECTION BY CONTRACTORS OR PROSPECTIVE BIDDERS. BY SUBMITTING A BID, THE CONTRACTOR ACKNOWLEDGES THAT THE SOILS REPORT AND DATA HAVE BEEN MADE AVAILABLE, THAT THE CONTRACTOR IS AWARE OF THE REPORT CONTENTS AND APPENDICES, AND THAT THE SOILS REPORT IS PART OF THE CONTRACT DOCUMENTS.

AVAILABILITY OF ELECTRONIC FILES:
MICROSTATION AND GEOPAK FILES OF THIS PROJECT WILL BE MADE AVAILABLE TO THE CONTRACTOR AFTER CONTRACT AWARD. IF THERE IS A CONFLICT BETWEEN THE ELECTRONIC FILES AND THE PRINTED CONTRACT PLANS AND DOCUMENTS, THE PRINTED CONTRACT PLANS AND DOCUMENTS SHALL TAKE PRECEDENCE OVER THE ELECTRONIC FILES. THE CONTRACTOR SHALL ACCEPT ALL RISK ASSOCIATED WITH USING THE ELECTRONIC FILES AND SHALL HOLD THE DEPARTMENT HARMLESS FOR ANY ERRORS OR OMISSIONS IN THE ELECTRONIC FILES AND THE DATA CONTAINED THEREIN. ERRORS OR DELAYS RESULTING FROM THE USE OF THE ELECTRONIC FILES BY THE CONTRACTOR SHALL NOT RESULT IN AN EXTENSION OF TIME FOR ANY INTERIM OR FINAL COMPLETION DATE OR SHALL NOT BE CONSIDERED CAUSE FOR ADDITIONAL COMPENSATION. THE CONTRACTOR SHALL NOT USE, SHARE, OR DISTRIBUTE THESE ELECTRONIC FILES EXCEPT FOR THE PURPOSE OF CONSTRUCTING THIS CONTRACT. ANY CLAIMS BY THIRD PARTIES DUE TO USE OR ERRORS SHALL BE THE RESPONSIBILITY OF THE CONTRACTOR. THE CONTRACTOR SHALL INCLUDE THIS DISCLAIMER WITH THE TRANSFER OF THESE ELECTRONIC FILES TO ANY OTHER PARTIES AND SHALL INCLUDE APPROPRIATE LANGUAGE BINDING THEM TO SIMILAR RESPONSIBILITIES.

TREE REMOVAL - UTILITY RELOCATION:
TREE REMOVAL MAY BE NECESSARY PRIOR TO UTILITY COMPANIES BEING ABLE TO RELOCATE THEIR FACILITIES OUTSIDE THE CONSTRUCTION LIMITS. THE CONTRACTOR SHALL COORDINATE ANY CONTRACT TREE REMOVAL ACTIVITIES WITH THE UTILITY COMPANIES TO ELIMINATE CONFLICTS AND POTENTIAL DELAYS CAUSED BY UTILITY TREE REMOVAL ACTIVITIES OR INCOMPLETE UTILITY RELOCATIONS.

PLAN ELEVATIONS - U.S.G.S. MEAN SEA LEVEL DATUM:
ALL ELEVATIONS SHOWN REFER TO U.S.G.S. DATUM AT MEAN SEA LEVEL UNLESS OTHERWISE NOTED.

TEMPORARY MATERIAL REQUIREMENTS - UTILITY AND DRIVEWAY CROSSINGS:
INCIDENTAL HOT-MIX ASPHALT SURFACE SHALL BE USED FOR ALL TEMPORARY SIDE ROAD CROSSINGS. AGGREGATE SURFACE COURSE MAY BE USED FOR ALL DRIVEWAY CROSSINGS EXCEPT DURING WINTER SHUTDOWN IN ACCORDANCE WITH ARTICLE 107.09.

CONSECUTIVE SIDE STREET (ROAD) CLOSURE - PROHIBITED:
1. NO TWO CONSECUTIVE SIDE STREETS (ROADS) MAY BE CLOSED AT THE SAME TIME DURING CONSTRUCTION. THE CONTRACTOR MUST ALTERNATE STREETS (ROADS).
2. ADJACENT SIDEROADS WILL NOT BE CLOSED SIMULTANEOUSLY. BLR STANDARD 21 SHALL BE USED FOR ALL LOCAL ROAD CLOSURES WITHOUT ANY ENTRANCES WITHIN THE CLOSED AREA. BLR STANDARD 22 CAN BE USED WHERE IT IS NECESSARY TO ALLOW LOCAL TRAFFIC ACCESS.

WINTER SHUTDOWN RESTRICTIONS ON COLD MILLED PROJECTS:
PRIOR TO WINTER SHUTDOWN ALL MANHOLES, WHERE APPLICABLE, SHALL BE ADJUSTED TO THE ELEVATION OF THE BINDER COURSE/LEVELING BINDER TO EASE IN PLOWING SNOW, AND RE-ADJUSTED TO FINISHED GRADE IN THE SPRING. THE INITIAL MANHOLE ADJUSTMENT WILL BE PAID FOR AT THE CONTRACT UNIT PRICE AND ANY RE-ADJUSTMENT, AS DIRECTED BY THE ENGINEER, WILL BE PAID FOR IN ACCORDANCE WITH ARTICLE 109.04.

## GENERAL NOTES (CONTINUED):

ENVIRONMENTAL REVIEWS:
PRIOR TO THE USE OF ANY PROPOSED BORROW AREAS, USE AREAS (TEMPORARY ACCESS ROADS, DETOURS, RUN-AROUNDS, ETC.) AND/OR WASTE AREAS, THE CONTRACTOR SHALL FILE THE REQUIRED ENVIRONMENTAL RESOURCE REQUEST SURVEYS ACCORDING TO SECTION 107.22 OF THE STANDARD SPECIFICATIONS. THESE SURVEYS ARE REQUIRED IN ORDER FOR THE DEPARTMENT TO CONDUCT CULTURAL AND BIOLOGICAL RESOURCE SURVEYS FOR THE PROPOSED SITE.

THE REQUIRED ENVIRONMENTAL RESOURCE DOCUMENTATION SHALL INCLUDE THE FOLLOWING:
* BDE FORM 2289 (BORROW SITE REVIEW)
* BDE FORM 2290 (WASTE/USE AREA REVIEW)
* A LOCATION MAP SHOWING THE SIZE LIMITS AND LOCATION OF THE USE AREA
* COLOR PHOTOGRAPHS DEPICTING THE USE AREA
* BORROW AREA ENTRY AGREEMENT FORM - D4 PI0101

PRIOR TO ANY WASTE MATERIALS BEING REMOVED FROM THE CONSTRUCTION SITE THE REQUIRED ENVIRONMENTAL RESOURCE SURVEYS SHALL BE OBTAINED AND FILED BY THE CONTRACTOR. EXCESS WASTE PRODUCTS REMOVED FROM THE CONSTRUCTION SITE SHALL BE DISPOSED OF AS REQUIRED IN SECTION 202.03 OF THE STANDARD SPECIFICATIONS.

ANY PROTRUDING METAL BARS SHALL BE REMOVED PRIOR TO THE DISPOSAL OF BROKEN CONCRETE AT APPROVED DISPOSAL SITES.

PLEASE NOTE THAT A MINIMUM OF FOUR WEEKS SHALL BE ALLOWED FOR THE DISTRICT TO OBTAIN THE REQUIRED WASTE SITE ENVIRONMENTAL CLEARANCES AND SIX WEEKS FOR THE REQUIRED BORROW SITE ENVIRONMENTAL CLEARANCES.

SEEDING - SIDESLOPE RIPPING:
ALL SLOPES STEEPER THAN 3 TO 1 AND OVER 15 FT. (4.5 M) IN HEIGHT SHALL BE RIPPED. THIS SHALL CONSIST OF RIPPING BETWEEN 18 INCHES TO 24 INCHES (450 MM TO 600 MM) DEEP NORMAL TO THE SLOPE. THE INTERVAL OF RIPPING ALONG THE SLOPE SHALL BE 12 FT. (3.6 M). THIS WORK SHALL BE DONE AFTER THE SEED BED HAS BEEN PREPARED BUT BEFORE ANY FERTILIZER OR SEED HAS BEEN APPLIED. THE FERTILIZER AND SEED SHALL BE APPLIED WITHIN A 24-HOUR PERIOD AFTER THE RIPPING HAS BEEN DONE. THIS WORK WILL NOT BE PAID FOR SEPARATELY BUT WILL BE INCLUDED IN THE COST OF THE VARIOUS ITEMS OF SEEDING INVOLVED.

AGGREGATE SHOULDERS, TYPE B:
AGGREGATE SHOULDERS, TYPE B SHALL BE REQUIRED FOR ALL GRANULAR CONSTRUCTION OF SIDE ROADS, ENTRANCES, AND MAILBOX TURNOUTS, WHETHER OR NOT PORTIONS OF THE SURFACES THUS CONSTRUCTED ARE TO BE COVERED WITH A BITUMINOUS SURFACE, EXCEPT WHERE NOTED DIFFERENTLY ON THE PLANS.

TREE REMOVAL RESTRICTIONS
DUE TO THE POTENTIAL PRESENCE OF ENDANGERED BATS, NO TREE REMOVAL WILL BE ALLOWED ON THIS PROJECT BETWEEN APRIL 1ST AND SEPTEMBER 30TH.

## GENERAL NOTES (CONTINUED):

PAVEMENT STATIONING NUMBERS & PLACEMENT:
THE CONTRACTOR SHALL PROVIDE LABOR AND MATERIALS REQUIRED TO IMPRINT PAVEMENT STATION NUMBERS IN THE FINISHED SURFACE OF THE PAVEMENT AND/OR OVERLAY. THE NUMBERS SHALL BE APPROXIMATELY 3/4 INCH (20 MM) WIDE, 5 INCHES (125 MM) HIGH AND 5/8 INCH (15 MM) DEEP.

THE PAVEMENT STATION NUMBERS SHALL BE INSTALLED AS SPECIFIED HEREIN:

INTERVAL - 200 FEET (ENGLISH STATIONING) OR 100 METERS (METRIC STATIONING)

BOTTOM OF NUMBERS - 6 INCHES (150 MM) FROM THE INSIDE EDGE OF THE PAVEMENT MARKING

LOCATION:
- 2, 3, & 5 LANE PAVEMENTS - RIGHT EDGE OF PAVEMENT IN DIRECTION OF INCREASING STATIONS
- MULTI-LANE DIVIDED ROADWAYS - OUTSIDE EDGE OF PAVEMENT IN BOTH DIRECTIONS
- RAMPS - ALONG BASELINE EDGE OF PAVEMENT

POSITION - STATIONS SHALL BE PLACED SO THEY CAN BE READ FROM THE ADJACENT SHOULDER

FORMAT - ENGLISH (METRIC) PAVEMENT STATIONS SHALL USE THIS FORMAT "XXX (XX+X00)", WHERE X REPRESENTS THE PAVEMENT STATION

THIS WORK WILL NOT BE PAID FOR SEPARATELY, BUT WILL BE INCLUDED IN THE COST OF THE ASSOCIATED PAVEMENT AND/OR OVERLAY PAY ITEMS.

POLYMERIZED BITUMINOUS MATERIALS (TACK COAT) RATES:

| SURFACE TYPE | RESIDUAL RATE |
|---|---|
| MILLED (HMA OR PCC) | 0.08 LB / SQ FT |
| EXISTING PAVEMENT | 0.08 LB / SQ FT |
| FOG COAT (BETWEEN LIFTS) | 0.08 LB / SQ FT |

PLACE BITUMINOUS MATERIALS (PRIME COAT) ON AGGREGATE SURFACE PRIOR TO HMA PAVING.

MINIMUM VERTICAL CLEARANCE:
THE CONTRACTOR SHALL VERIFY THE EXISTING STRUCTURE VERTICAL CLEARANCE PRIOR TO PLACING BITUMINOUS OVERLAY UNDER ANY STRUCTURE. A MINIMUM 15'-1" VERTICAL CLEARANCE SHALL BE MAINTAINED UNDER ALL STRUCTURES.

BUTT JOINT CUTTING TIME RESTRICTION:
BUTT JOINTS SHALL NOT BE MILLED MORE THAN THREE (3) DAYS PRIOR TO PLACEMENT OF THE HMA SURFACE COURSE.

PAVING SURFACE COURSE:
CONTINUOUS PAVING OPERATIONS ON THE MAIN ROADWAY SHALL BE MAINTAINED AT ALL TIMES DURING THE CONSTRUCTION OF THE HOT-MIX ASPHALT SURFACE. NO INTERRUPTIONS FOR SIDE ROADS, ENTRANCES, TURN LANES, ETC. WILL BE ALLOWED.

SAW CUT - 18" (450 MM) SHOULDER REMOVAL - IN-PLACE WHEEL SAW GRINDING PERMITTED:
A FULL DEPTH SAW CUT SHALL BE REQUIRED AT THE JOINT BETWEEN THE PAVEMENT THAT IS TO BE LEFT IN PLACE AND THE EXISTING SHOULDER THAT IS TO BE REMOVED. THE CONTRACTOR MAY HAVE THE OPTION OF USING A WHEEL SAW TO GRIND UP THE EXISTING SHOULDER AND LEAVE THE FINELY GROUND PIECES ON SITE UNDER THE NEW SHOULDER AND ON THE FORESLOPE, WITH THE APPROVAL OF THE ENGINEER. MAXIMUM SIZE OF PIECES SHALL BE NO MORE THAN 3" (75 MM). LARGER PIECES SHALL BE PICKED UP/REMOVED FROM THE JOBSITE. NO ADDITIONAL COMPENSATION WILL BE ALLOWED FOR VARIATIONS IN ASSUMED THICKNESS. THIS WORK SHALL NOT BE PAID FOR SEPARATELY, BUT SHALL BE INCLUDED IN THE COST OF THE REMOVAL ITEMS.

ORDERING LENGTH CONFIRMATION - DRAINAGE ITEMS:
THE CONTRACTOR SHALL CONSULT WITH THE ENGINEER IN REGARD TO THE EXACT LENGTH OF THE BOX/PIPE CULVERTS, STORM SEWERS, AND/OR PIPE DRAINS REQUIRED PRIOR TO ORDERING THESE ITEMS.

EXISTING DRAINAGE PIPES CONNECTED TO NEW STRUCTURES:
IN ACCORDANCE WITH SECTION 602 OF THE STANDARD SPECIFICATIONS, THE CONNECTING OF EXISTING DRAINTILES, PIPE CULVERTS, OR STORM SEWERS TO THE PROPOSED DRAINAGE SYSTEM STRUCTURES WILL NOT BE PAID FOR SEPARATELY BUT SHALL BE CONSIDERED AS INCLUDED IN THE PAY ITEMS PROVIDED.

TAPER REMOVAL @ FRAME & GRATES ADJUSTED BY OTHERS:
AT LOCATIONS WHERE FRAMES AND GRATES HAVE PREVIOUSLY BEEN ADJUSTED BY OTHERS AND THEY ARE SURROUNDED BY HOT-MIX ASPHALT TAPERS, THE CONTRACTOR FOR THIS CONTRACT SHALL REMOVE AND DISPOSE OF THE HOT-MIX ASPHALT TAPER MATERIAL PRIOR TO THE PLACEMENT OF THE HOT-MIX ASPHALT SURFACE COURSE. THIS WORK WILL NOT BE PAID FOR SEPARATELY, BUT WILL BE CONSIDERED AS INCLUDED IN THE COST OF THE HOT-MIX ASPHALT SURFACE COURSE PAY ITEM.

## HOT–MIX ASPHALT MIXTURE REQUIREMENTS:

| Mixture Use(s): | Polymer Surface 2" | Polymer Binder 2.25" | Polymer Binder (Lower Lift 4" and 2.5") | Incidental, Side Roads, & Temp Pavt Surface | Side Roads & Temp Pavt (Lower Lifts) |
|---|---|---|---|---|---|
| AC/PG: | SBS or SBR 76-28 | SBS or SBR 76-28 | SBS or SBR 76-28 | PG 58-28 | PG 64-22 |
| Design Air Voids: | 4.0% @ N=70 | 4.0% @ N=70 | 4.0% @ N=70 | 4.0% @ N=50 | 4.0% @ N=50 |
| Mixture Composition: (Mixture Gradation) | IL 9.5 | IL 9.5 | IL 19.0 | IL 9.5 | IL 19.0 |
| Friction Aggregate: | Mix E | N.A. | N.A. | Mix C | Mix C |
| Quality Management Program: | QCP | QCP | QCP | QCQA | QCQA |

NOTES:
1) INDIVIDUAL LIFT THICKNESS OF EACH MIX TYPE WILL BE NO LESS THAN 3 TIMES NOMINAL MAXIMUM AGGREGATE SIZE AND NO MORE THAN 6 TIMES NOMINAL MAXIMUM AGGREGATE SIZE, UNLESS OTHERWISE APPROVED BY THE ENGINEER.
2) FOR DESIGN PURPOSES, MIXTURE WEIGHT FOR ALL MIXES IS DETERMINED TO BE 112.0 LB/S.Y./IN., UNLESS OTHERWISE NOTED.
3) SUBLOT SIZES FOR PFP AND QCP MIXES WILL BE 600 TONS, UNLESS OTHERWISE AGREED TO BY THE ENGINEER AND THE PAVING CONTRACTOR.

## GENERAL NOTES (CONTINUED):

MEDIAN AND ISLAND NOSES:
WHEN CONSTRUCTING MEDIAN AND ISLAND NOSES THE FOLLOWING CRITERIA SHOULD BE FOLLOWED:
* BARRIER CURB SHALL BE USED TO CONSTRUCT NOSES WHEN THE MEDIAN OR ISLAND SURROUNDS A MAST ARM OR OTHER NON-BREAKAWAY FOUNDATION.
* RAMPED NOSES SHALL BE USED ON MEDIANS OR ISLANDS WITH BREAKAWAY POSTS.

SIGN POST HOLES:
VERTICAL HOLES SHALL BE CONSTRUCTED IN THE ISLAND PAVEMENT AND/OR CONCRETE MEDIAN OF THE TYPE SPECIFIED OR CONCRETE MEDIAN SURFACE 4 INCHES (100 MM). THE HOLES SHALL BE 24 INCHES (600 MM) IN DIAMETER OR 24 INCHES (600 MM) SQUARE AND THEY SHALL BE FREE OF ANY OBSTRUCTION, EXCEPT EARTH, FOR A DEPTH OF 5 FEET (1.5 M) AT THE LOCATIONS SHOWN ON THE PLANS OR AS DIRECTED BY THE ENGINEER. ANY HOLES NOT USED FOR THE PLACEMENT OF SIGNS SHALL BE FILLED AND COMPACTED FLUSH WITH THE TOP OF THE ISLAND PAVEMENT, CONCRETE MEDIAN OF THE TYPES SPECIFIED, OR CONCRETE MEDIAN SURFACE 4 INCHES (100 MM). THE TOP 3 INCHES (75 MM) OF SAID COMPACTED FILL SHALL CONSIST OF A HOT-MIX ASPHALT MIXTURE. ALL HOLES IN WHICH THE SIGN POSTS ARE INSTALLED AT THE TIME OF THIS CONTRACT SHALL BE SIMILARLY FILLED.

THIS WORK, INCLUDING ANY REQUIRED PAVEMENT REMOVAL NECESSARY TO CONSTRUCT THE SIGN POST HOLES, WILL NOT BE PAID FOR SEPARATELY BUT SHALL BE INCLUDED IN THE CONTRACT UNIT PRICE PER SQUARE FOOT (SQUARE METER) FOR ISLAND PAVEMENT AND/OR CONCRETE MEDIAN OF THE TYPE SPECIFIED, OR CONCRETE MEDIAN SURFACE, 4 INCHES (100 MM).

TRANSITION PAYMENT METHOD - NEW/OLD CONSTRUCTION:
TEN FEET (10 FT.) (3 M) TRANSITIONS SHALL BE USED TO MATCH PROPOSED ITEMS OF WORK TO EXISTING ITEMS IN THE FIELD UNLESS OTHERWISE SHOWN. THE TRANSITION SHALL BE PAID FOR AT THE CONTRACT UNIT PRICE FOR THE PROPOSED ITEM OF WORK SPECIFIED.

RIGHT-OF-WAY MARKERS:
WHEN INSTALLING RIGHT-OF-WAY MARKERS, CARE SHALL BE TAKEN TO NOT DISTURB ANY EXISTING PROPERTY/RIGHT-OF-WAY PINS. IF A PROPERTY/RIGHT-OF-WAY PIN IS FOUND AT THE LOCATION OF A PROPOSED RIGHT-OF-WAY MARKER, THE MARKER SHALL BE PLACED ONE (1) FOOT IN FRONT OF THE PIN.

SETTING OF SECTION CORNER MONUMENTATION:
ALL SECTION CORNER LOCATIONS ON THIS PROJECT SHALL BE LOCATED AND VERIFIED BY A LICENSED LAND SURVEYOR PRIOR TO ANY REMOVAL WORK BEING PERFORMED. THE LAND SURVEYOR SHALL LOCATE THE EXISTING SECTION CORNERS THROUGH COURTHOUSE RESEARCH, PERSONAL KNOWLEDGE OR THROUGH THE ASSISTANCE OF LOCAL FIRMS PERFORMING LAND SURVEYING IN THE AREA. IF THE SECTION CORNER DOES NOT EXIST THROUGH EITHER ITS PHYSICAL LOCATION OR THROUGH TIES IN THE FIELD IT SHALL NOT BE RESET, THERE SHALL BE NO CALCULATING OF SECTION CORNERS ONTO A PROJECT REQUIRED.

ONCE THE PAVING AND STRIPING OPERATIONS HAVE BEEN PERFORMED THE SECTION CORNER SHALL BE RESET AT THE DIRECTION OF A LICENSED LAND SURVEYOR. IF ANY DIMENSIONS HAVE BEEN CHANGED IT SHALL BE THE RESPONSIBILITY OF THE SURVEYOR TO FILE A NEW MONUMENT RECORD IN THE APPROPRIATE COURTHOUSE.

A COPY OF ALL DRAWINGS OR MONUMENT RECORDS PRODUCED FROM THIS PROJECT SHALL BE SENT TO THE CHIEF OF SURVEYS, ILLINOIS DEPARTMENT OF TRANSPORTATION, REGION THREE/DISTRICT FOUR, PEORIA, ILLINOIS.

THE SUPPLYING, DRILLING, SETTING OF DISKS, PROFESSIONAL SERVICES, LABOR AND ANY OTHER ADDITIONAL WORK REQUIRED TO PERFORM THIS WORK SHALL BE PAID FOR UNDER PAY ITEM FOR PERMANENT SURVEY MARKERS, TYPE I.

REFER TO DISTRICT FOUR CADD STANDARD 667101 FOR DETAILS.

SECURING DRAINAGE STRUCTURE GRATES:
PRIOR TO ROUTING TRAFFIC ONTO THE SHOULDERS AS SHOWN IN THE STAGING PLANS, THE CONSTRACTOR SHALL SECURE GRATINGS ON SHOULDER INLETS AS DIRECTED BY THE ENGINEER. THIS WORK WILL NOT BE PAID FOR SEPARATELY, BUT SHALL BE INCLUDED IN THE COST OF THE TRAFFIC CONTROL PAY ITEM.

ADDITIONAL SUPPLEMENTAL TRAFFIC CONTROL:
THE DEPARTMENT RESERVES THE RIGHT AT ANY TIME TO ADD ADDITIONAL TRAFFIC CONTROL SYSTEMS OR DEVICES WITHIN THE ACTIVE CONTRACT LIMITS, BY MEANS OF AN ADDITIONAL CONTRACT. ALL TERMS OF ARTICLE 105.08 OF THE STANDARD SPECIFICATIONS SHALL BE FOLLOWED BY EACH CONTRACTOR.

SIGNING:
SIGN LOCATIONS MAY VARY FROM THE STATIONS SHOWN ON THE PLANS IN ACCORDANCE WITH DIRECTIONS FROM THE ENGINEER AT THE TIME OF CONSTRUCTION. SIGN LOCATIONS MAY BE ADJUSTED IN THE FIELD TO AVOID ANY FOUND UTILITIES.

ALL WOOD POST LOCATIONS SHALL BE VERIFIED WITH THE BUREAU OF OPERATIONS, TRAFFIC SECTION, BEFORE INSTALLATION.

TRAFFIC COUNTER LOOP DETECTOR INSTALLATION:
THE RESIDENT ENGINEER AND/OR CONTRACTOR SHALL NOTIFY THE TRAFFIC STUDIES TECHNICIAN IN PROGRAM DEVELOPMENT AT LEAST ONE WEEK PRIOR TO THE INSTALLATION TO DETERMINE EXACT LOCATION.

FUTURE MULTI-USE PATH
PLANS INCLUDE GRADING FOR A FUTURE MULTI-USE PATH ADJACENT TO RETAINING WALL A. CONTRACT 68C55 IS LIMITED TO GRADING, TOPSOIL, AND SEEDING. PAVEMENT FOR THE MULTI-USE PATH IS NOT INCLUDED IN CONTRACT 68C55.

## GENERAL NOTES (CONTINUED):

EXISTING IDOT FIBER OPTIC CONDUIT:
AN EXISTING CONDUIT IS LOCATED APPROXIMATELY FROM RAMP D STA 407+00, 50' RT TO MAIN STREET 104+20, 40' RT. THE CONDUIT CONTINUES TO STA 124+50, 40' RT THROUGH THE PROJECT LIMIT. THE CONDUIT IS NOT DISPLAYED IN THE CROSS SECTION VIEWS. THE CONTRACTOR SHALL LOCATE THE CONDUIT PRIOR TO CONSTRUCTION AND COORDINATE THE RELOCATION WITH THE ENGINEER.

EXISTING RAILROAD SIGN/SIGNAL CONDUIT:
AN EXISTING SIGNAL CONDUIT IS LOCATED THROUGH THE PROJECT LIMITS ALONG THE SOUTH SIDE OF MAIN STREET. THE CONDUIT IS NOT DISPLAYED IN THE ROADWAY PLANS OR CROSS-SECTION VIEW. THE CONTRACTOR SHALL LOCATE THE CONDUIT PRIOR TO CONSTRUCTION AND COORDINATE THE RELOCATION WITH THE ENGINEER.

PROPOSED IDOT FIBER OPTIC CONDUIT AND RAILROAD SIGNAL CABLE:
THE PROPOSED RELOCATION OF THE IDOT FIBER AND RAILROAD SIGNAL IS IDENTIFIED IN THE LIGHTING AND ITS PLANS. THE CONDUIT AND SIGNAL ARE NOT DISPLAYED IN THE ROADWAY PLANS OR CROSS SECTIONS.

## PROJECT COMMITMENTS:

COMMITMENTS ARE NOT TO BE ALTERED WITHOUT THE WRITTEN APPROVAL OF ALL PARTIES TO WHICH THE COMMITMENT WAS MADE.

1. STORM SEWER MAIN IS TO BE USED AT LOCATIONS WHERE LATERAL SEPARATION BETWEEN THE SEWER AND WATER MAIN IS LESS THAN 10 FEET AND THE WATER MAIN INVERT IS LESS THAN 1.5 FEET ABOVE THE TOP OF THE STORM SEWER.

2. PARCEL NO. 4ABL007

   MS. ELAM HAS REQUESTED TO BE NOTIFIED AT LEAST 30 DAYS BEFORE THE START OF ANY NEW CONSTRUCTION ALONG HER PROPERTY LINE. SHE HAS REQUESTED TO BE NOTIFIED AT (309) 370-0123 OR HER DAUGTHER, DEB HIGHLEY AT (309) 232-1644.

3. THE FENCE AROUND THE DUMPSTER LOCATED APPROXIMATELY AT STA 103+75, 59' LT SHALL NOT BE DISTURBED DURING THE CONSTRUCTION OF THE PROJECT.

| | | |
|---|---|---|
| GRANULAR MATERIALS | 1.8 | TONS / CU YD |
| HMA RESURFACING | 112 | LBS / SQ YD / IN |
| SUPPLEMENTAL WATERING | 2 | GAL / SQ YD |

GEN-02

Illinois Department of Transportation

**Status of Utilities** (Final 5/28/25

Name of Utility Company

East Peoria Water

Route: FAP 669/673 (IL8 & IL116)(US 24/IL 29)
Section: 13((HVB,HB-3))BR-1,R
County: Tazewell
Contract No.: 68C55
Catalog No.: 035206-00D

| Route | Offset | Location | Type of Utility | Type of Conflict | Disposition |
|---|---|---|---|---|---|
| IL 29 (Main St.) | Rt 9' | 98+62 | 8" Watermain | New 12" SS | Caution |
| IL 29 (Main St.) | Rt 3' | 99+08 | Valve & 4"/8" watermain | New pvt, median & 18" SS removal | Adjust / Caution |
| IL 29 (Main St.) | Rt 24' | 99+17 | Valve | New pavement | Adjust |
| IL 29 (Main St.) | Centerline | 99+35 to 100+00 | 8" Watermain | New pvt, inlets, 12" SS & Inlet/SS removal | Relocate |
| IL 29 (Main St.) | Lt 15' | 100+40 | 8" Watermain | 36" storm sewer removal | Caution |
| IL 29 (Main St.) | Lt varies | 101+15 | (3) Valves | New pavement | Adjust |
| IL 29 (Main St.) | Lt 35' | 101+19 | Valve | New pavement | Adjust |
| IL 29 (Main St.) | Lt 50' | 101+25 | Fire Hydrant | New sidewalk | Relocate |
| IL 29 (Main St.) | Lt varies | 101+20 to 120+50 | 8" watermain | | To be abandoned |
| IL 29 (Main St.) | Lt 41' | 120+56 | 8" watermain | New 24" SS | Relocate |
| IL 29 (Main St.) | Rt 35' | 120+56 | 8" watermain | New 12" SS | Relocate |
| IL 29 (Main St.) | Lt 49' | 120+60 | Valve | New sidewalk | Relocate in new pvt |
| IL 29 (Main St.) | Lt 37' | 120+85 to 121+31 | 8" watermain | New inlets & 18" SS | Relocate |
| IL 29 (Main St.) | Lt 37' | 121+31 to 123+15 | 8" watermain | New base & curb | Caution |
| | | | | | |
| Silver St. | Rt 15' | 21+62 | 6" watermain | New curb & 12" SS | Caution |
| Silver St. | Rt 7' | 21+70 | Fire Hydrant | New pavement | Relocate |
| Silver St. | Rt 32' | 21+70 | 6" watermain | New 12" SS | Relocate |

NOTE: Please check all your facilities within the construction limits of this project.

Printed 5/29/2025 D4 PD0100 (Rev. 02/24/10)

Illinois Department of Transportation

**Status of Utilities** (Final 5/18/23)

Name of Utility Company

East Peoria Sanitary - 1 of 2

Route: FAP 669/673 (IL8 & IL116) (US 24/IL 29)
Section: 13((HVB,HB-3))BR-1,R
County: Tazewell
Contract No.: 68C55
Catalog No.: 035206-00D

| Route | Offset | Location | Type of Utility | Type of Conflict | Disposition |
|---|---|---|---|---|---|
| IL 29 (Main St.) | Lt 27' | 99+30 | Manhole | New pavement | Adjust |
| IL 29 (Main St.) | Rt 67' | 99+50 | Manhole | New grade | Adjust |
| IL 29 (Main St.) | Rt 109' | 99+54 | 30" sanitary | New 15" SS | Caution |
| IL 29 (Main St.) | Rt 47' | 100+09 | Manhole | New pavement | Adjust |
| IL 29 (Main St.) | Lt 54' | 100+66 | Manhole | New curb | Reconstruct |
| IL 29 (Main St.) | Lt 42' | 100+98 | 8" sanitary | 18" SS removal | Caution |
| IL 29 (Main St.) | Lt 35' | 101+13 | Manhole | New pavement | Adjust |
| IL 29 (Main St.) | Rt 65' | 101+15 | Manhole | New pavement | Reconstruct |
| IL 29 (Main St.) | Lt 35' | 101+40 | 8" sanitary | New 36" SS | Caution |
| IL 29 (Main St.) | Lt 35' | 102+29 | 8" sanitary | New inlet & 12" SS | Caution |
| IL 29 (Main St.) | Lt 36' | 102+72 | Manhole | New pavement | Adjust |
| IL 29 (Main St.) | Rt 77' | 102+88 | Manhole | New pavement | Adjust |
| IL 29 (Main St.) | Lt 38' | 103+97 | Manhole | New curb & sidewalk | Adjust |
| IL 29 (Main St.) | Rt 58' | 104+77 | Manhole | New grade | Reconstruct |
| IL 29 (Main St.) | Rt 52' | 104+95 | Manhole | Abandoned | Fill |
| IL 29 (Main St.) | Rt varies | 104+86 to 108+60 | 8" sanitary | New bridge pier | * See note 2 |
| IL 29 (Main St.) | Lt 34' | 105+10 to 106+80 | 8" sanitary | New pvt, curb & SW | Caution |
| IL 29 (Main St.) | Lt 36' | 106+80 to 107+05 | 8" sanitary | New 12" SS | Caution |
| IL 29 (Main St.) | Lt 37' | 105+47 | Manhole | New sidewalk | Adjust |
| IL 29 (Main St.) | Rt 55' | 106+38 | Manhole | Abandoned | Fill |
| IL 29 (Main St.) | Rt 72' | 106+42 | Manhole | Abandoned | Fill |
| IL 29 (Main St.) | Lt 36' | 107+13 | Manhole | New pavement | Adjust |
| IL 29 (Main St.) | Lt 35' | 107+47 | 8" sanitary | 30" SS removal | Caution |
| IL 29 (Main St.) | Lt 35' | 108+77 | Manhole | New pavement | Adjust |
| IL 29 (Main St.) | Rt 110' | 108+72 | Manhole | New grade | Reconstruct |
| IL 29 (Main St.) | Rt 90' | 109+00 | Manhole | New grade | Reconstruct |
| IL 29 (Main St.) | Rt 93' | 109+84 | Manhole | New grade | Reconstruct |
| IL 29 (Main St.) | Lt 35' | 110+00 | 8" sanitary | New 60" SS | Caution |
| IL 29 (Main St.) | Rt 102' | 110+00 | 8" sanitary | New 60" SS | Caution |

NOTE: Please check all your facilities within the construction limits of this project.

*2 - NOTE: To be abandoned in place and plugged at manhole removal.

Illinois Department of Transportation

**Status of Utilities** (Final 5/18/23)

Name of Utility Company

East Peoria Sanitary - 2 of 2

Route: FAP 669/673 (IL8 & IL116) (US 24/IL 29)
Section: 13((HVB,HB-3))BR-1,R
County: Tazewell
Contract No.: 68C55
Catalog No.: 035206-00D

| Route | Offset | Location | Type of Utility | Type of Conflict | Disposition |
|---|---|---|---|---|---|
| IL 29 (Main St.) | Lt 34' | IL 29 (Main St.) | 8" sanitary | New 5' manhole | Caution |
| IL 29 (Main St.) | Lt 33' | IL 29 (Main St.) | Manhole | New pavement | Adjust |
| IL 29 (Main St.) | Lt 35' | IL 29 (Main St.) | Manhole | New pavement | Adjust |
| IL 29 (Main St.) | Lt 35' to 80' | 112+78 | 8" sanitary | New wall | * See note 3 |
| IL 29 (Main St.) | Lt 35' | 115+55 | Manhole | New pavement | Adjust |
| IL 29 (Main St.) | Lt 33' | 117+97 | Manhole | New pavement | Adjust |
| IL 29 (Main St.) | Lt 32' | 118+77 | Manhole | New pavement | Adjust |
| IL 29 (Main St.) | Lt 27' | 121+50 | Manhole | New pavement | Adjust |
| IL 29 (Main St.) | Lt 19' | 123+42 | Manhole | New surface | Adjust |
| | | | | | |
| Johnson St. | Rt 3' | 30+60 | Manhole | New pavement | Adjust |
| | | | | | |
| Pekin Ave | Lt 21' | 40+90 | Manhole | New sidewalk | Adjust |

NOTE: Please check all your facilities within the construction limits of this project.

*3 - NOTE: To be replaced through wall with casing.

Illinois Department of Transportation

**Status of Utilities** (Final 2/15/23)

Name of Utility Company

Comcast

Route: FAP 669 (IL 8 & IL 116) (US 24/IL 29)
Section: 13((HVB,HB-3))BR-1,R
County: Tazewell
Contract No.: 68C55
Catalog No.: 035206-00D

| Route | Offset | Location | Type of Utility | Type of Conflict | Disposition |
|---|---|---|---|---|---|
| IL 29 (Main St.) | Rt 71' | 112+60 | Power Pole & guy | Future Multi Use Path | Relocate |
| IL 29 (Main St.) | Rt 50' | 112+80 | Power Pole | New curb & guardrail | Relocate |
| IL 29 (Main St.) | Lt 55' | 112+85 | Power Pole | New ramp pavement | Relocate |
| IL 29 (Main St.) | Lt 53' | 113+98 | Power Pole | New pavement | Relocate |
| IL 29 (Main St.) | Rt 71' | 114+23 | Power Pole | Future Multi Use Path | Relocate |
| IL 29 (Main St.) | Lt 53' | 115+00 | Power Pole | New pavement | Relocate |
| IL 29 (Main St.) | Rt 71' | 115+88 | Power Pole | Future Multi Use Path | Relocate |
| IL 29 (Main St.) | Lt 49' | 116+01 | Power Pole | New pavement | Relocate |
| IL 29 (Main St.) | Lt 50' | 117+33 | Power Pole | New curb & gutter | Relocate |
| IL 29 (Main St.) | Rt 71' | 117+43 | Power Pole | Future Multi Use Path | Relocate |
| IL 29 (Main St.) | Lt 49' | 118+56 | Power Pole | New sidewalk | Relocate |
| IL 29 (Main St.) | Rt 71' | 119+25 | Power Pole | Future Mulit Use Path | Relocate |
| IL 29 (Main St.) | Lt 48' | 119+86 | Power Pole | New curb & gutter | Relocate |
| IL 29 (Main St.) | Lt 48' | 121+09 | Power Pole | New sidewalk | Relocate |
| IL 29 (Main St.) | Rt 50' | 123+08 | Power Pole | Future multi use path | Relocate |
| IL 29 (Main St.) | Rt 49' | 123+48 | Power Pole | Future multi use path | Relocate |
| | | | | | |
| Silver St. | Rt 35' | 20+59 | Buried Fiber & Coax | New manhole | Caution |
| Silver St. | Lt 33' to Rt 33' | 21+15 | Buried Fiber & Coax | New pavement, curb & SS | Relocate |
| Silver St. | Lt 22' to Rt 20' | 21+70 | Buried Fiber & Coax | New pavement & curb | Caution |
| Silver St. | Rt 26' | 22+00 | Buried Fiber & Coax | New ditch | Caution |
| Silver St. | Lt 20' to Rt 20' | 22+65 | Buried Fiber & Coax | New pavement & curb | Caution |

NOTE: Please check all your facilities within the construction limits of this project.

Printed 2/15/2023 D4 PD0100 (Rev. 02/24/10)

Illinois Department of Transportation

**Status of Utilities** (Final 2/15/23)

Name of Utility Company

Ameren Electric - 1 of 2

Route: FAP 669/673 (IL8 & IL116) (US 24/IL 29)
Section: 13((HVB,HB-3))BR-1,R
County: Tazewell
Contract No.: 68C55
Catalog No.: 035206-00D

| Route | Offset | Location | Type of Utility | Type of Conflict | Disposition |
|---|---|---|---|---|---|
| IL 29 (Main St.) | Lt 46' | 97+26 | Manhole | New sidewalk | Adjust |
| IL 29 (Main St.) | Rt 35' | 97+75 | Light Pole (EP) | New sidewalk | Relocate |
| IL 29 (Main St.) | Lt 31' | 98+35 to 98+80 | Buried Electric | New curb | Relocate |
| IL 29 (Main St.) | Lt 43' | 98+70 | Light Pole (EP) | New sidewalk | Relocate |
| IL 29 (Main St.) | Rt 45' | 98+85 | Light Pole (EP) | New pavement | Relocate |
| IL 29 (Main St.) | Lt 30' | 99+50 to 100+50 | Buried Electric | New curb & SS | Relocate |
| IL 29 (Main St.) | Lt 34' | 100+30 to 100+60 | Buried Electric | New curb, MH & SS | Relocate |
| IL 29 (Main St.) | Rt 62' | 100+75 | Light Pole | New pavement | Relocate |
| IL 29 (Main St.) | Lt 41' | 101+30 to101+70 | Buried Electric | New curb, MH & SS | Relocate |
| IL 29 (Main St.) | Lt 52' | 101+29 | Power/Light Pole | New sidewalk | Relocate |
| IL 29 (Main St.) | Lt 49' | 102+06 | Manhole | New sidewalk | Adjust |
| IL 29 (Main St.) | Lt 45' | 102+58 | Light Pole | New drive radius | Remove |
| IL 29 (Main St.) | Lt 35' | 104+17 | Power Pole | New sidewalk | Remove |
| IL 29 (Main St.) | Lt 30' | 104+00 to 106+26 | Buried Electric | New curb, sidewalk & Pier removal | Relocate |
| IL 29 (Main St.) | Lt 44' | 106+26 | Light Pole | New sidewalk | Remove |
| IL 29 (Main St.) | Lt 58' | 108+50 | Light Pole | New sidewalk | Remove |
| IL 29 (Main St.) | Lt 66' | 108+92 | Power Pole | New sidewalk & curb | Relocate |
| IL 29 (Main St.) | Rt 70' | 109+10 | Light Pole | Guardrail & Retain Wall A | Remove |
| IL 29 (Main St.) | Lt 38' | 111+00 | Light Pole | New lighting to be placed | Remove |
| IL 29 (Main St.) | Lt 57' | 111+84 | Power Pole & guy | New ramp pavement | Remove |
| IL 29 (Main St.) | Rt 71' | 112+65 | Power Pole & guy | Future multi use path | Relocate |
| IL 29 (Main St.) | Rt 51' | 112+80 | Power Pole | New curb & guardrail | Relocate |
| IL 29 (Main St.) | Lt 55' | 112+91 | Power Pole & guy | New ramp pavement | Relocate |
| IL 29 (Main St.) | Lt 40' | 113+54 | Light Pole | New pavement | Remove |
| IL 29 (Main St.) | Lt 53' | 113+98 | Power Pole | New pavement | Relocate |
| IL 29 (Main St.) | Rt 71' | 114+23 | Power Pole | Future multi use path | Relocate |
| IL 29 (Main St.) | Rt 35' | 114+69 | Light Pole | New pavement | Remove |
| IL 29 (Main St.) | Lt 53' | 115+00 | Power Pole | New pavement & curb | Relocate |
| IL 29 (Main St.) | Rt 71' | 115+88 | Power Pole | Future multi use path | Relocate |
| IL 29 (Main St.) | Lt 38' | 115+96 | Light Pole | New pavement & curb | Remove |

NOTE: Please check all your facilities within the construction limits of this project.

Printed 2/15/2023 D4 PD0100 (Rev. 02/24/10)

Illinois Department of Transportation

**Status of Utilities** (Final 2/15/23)

Name of Utility Company

Ameren Electric - 2 of 2

Route: FAP 669 (IL 8 & IL 116) (US24/IL 29)
Section: 13((HVB,HB-3))BR-1,R
County: Tazewell
Contract No.: 68C55
Catalog No.: 035206-00D

| Route | Offset | Location | Type of Utility | Type of Conflict | Disposition |
|---|---|---|---|---|---|
| IL 29 (Main St.) | Lt 49' | 116+01 | Power Pole | New pavement & curb | Relocate |
| IL 29 (Main St.) | Rt 35' | 117+28 | Light Pole | New pavement & curb | Remove |
| IL 29 (Main St.) | Lt 50' | 117+33 | Power Pole | New curb | Relocate |
| IL 29 (Main St.) | Rt 71' | 117+43 | Power Pole | New multi use path | Relocate |
| IL 29 (Main St.) | Lt 40' | 118+56 | Light Pole | New pavement | Remove |
| IL 29 (Main St.) | Lt 40' | 118+56 | Power Pole & guy | New curb & sidewalk | Relocate |
| IL 29 (Main St.) | Rt 35' | 119+85 | Light Pole | New curb & inlet | Remove |
| IL 29 (Main St.) | Lt 48' | 119+86 | Power Pole | New curb & sidewalk | Relocate |
| IL 29 (Main St.) | Lt 48' | 121+09 | Power Pole | New wall | Relocate |
| IL 29 (Main St.) | Lt 40' | 121+10 | Light Pole | New curb & sidewalk | Remove |
| IL 29 (Main St.) | Rt 41' | 122+04 | Light Pole | Future Multi Use Path | Remove |
| IL 29 (Main St.) | Rt 50' | 123+08 | Power Pole | Future Multi Use Path | Relocate |
| Il 29 (Main St.) | Rt 49' | 123+48 | Power Pole | Future Multi Use Path | Relocate |
| | | | | | |
| Silver St. | Lt Varies | 21+75 to 22+55 | 3 ph buried 13.2 k in conduit | New roadway, sidewalk & wall | Caution |
| NOTE: Wall E footing to be poured around duct bank<br>Reference sheets S5-1 – S5-6 or pp 822-827 | | | | | |
| | | | | | |
| Johnson St. | Lt 26' | 30+42 | Buried electric | New sidewalk | Caution |

NOTE: Please check all your facilities within the construction limits of this project.

Printed 2/15/2023 D4 PD0100 (Rev. 02/24/10)

STOUTIL-01

MODEL: Default
FILE NAME: pw:\\mb-us-pw.bentley.com:mb-us-pw-03\Documents\Chicago IL\01 Projects\179740 IDOT Cedar\SiEx Phl\5.0 CADD\CAD Sheets\D468C55-sht-status-utl01.dgn

Michael Baker INTERNATIONAL
200 W Adams Street
Suite 1800
Chicago, IL 60606
PH: 312.707.8770
FAX: 312.707.8804

| | | | |
|---|---|---|---|
| USER NAME = Winson.Teng | DESIGNED - | REVISED - | |
| | DRAWN - DCL | REVISED - | |
| PLOT SCALE = 2.0000 ' / in. | CHECKED - | REVISED - | |
| PLOT DATE = 5/29/2025 | DATE - 4/08/2025 | REVISED - | |

**STATE OF ILLINOIS**
**DEPARTMENT OF TRANSPORTATION**

**CEDAR ST (IL-8/IL-116) OVER TZPR & IL-29**
**STATUS OF UTILITIES TO BE ADJUSTED**

SCALE: NONE | SHEET 1 OF 2 SHEETS | STA. TO STA.

| F.A.P. RTE. | SECTION | COUNTY | TOTAL SHEETS | SHEET NO. |
|---|---|---|---|---|
| VAR. | 13 (HVB, HB-3) BR-1:R | TAZEWELL | 1173 | 6 |
| | | CONTRACT NO. 68C55 | | |
| | ILLINOIS | FED. AID PROJECT | | |

Illinois Department of Transportation

**Status of Utilities** (Final 2/15/23)

**Name of Utility Company**

**Ameren Gas**

| | |
|---|---|
| Route | FAP 669 (IL 8 & IL 116) (US 24/IL 29) |
| Section | 13((HVB,HB-3))BR-1,R |
| County | Tazewell |
| Contract No. | 68C55 |
| Catalog No. | 035206-00D |

| Route | Offset | Location | Type of Utility | Type of Conflict | Disposition |
|---|---|---|---|---|---|
| IL 29 (Main St.) | Rt 95' to 103' | 99+18 to 100+00 | 4" PE buried gas | (2) New SS crossings | Relocate |
| IL 29 (Main St.) | Rt 91' | 101+00 to 101+24 | 4" PE buried gas | New wall | Relocate |
| IL 29 (Main St.) | Lt 85' to Rt 92' | 101+15 | 4" PE buried gas | New wall, MH & SS | Relocate |
| IL 29 (Main St.) | Lt varies | 101+20 to110+10 | 2" PE buried gas | | Abandoned in place |
| IL 29 (Main St.) | Lt 45' to 65' | 110+10 to 121+50 | 2" PE buried gas | New grade, pvt., wall & SS | Relocate |
| IL 29 (Main St.) | Lt 45' | 121+50 to 123+07 | 2" PE buried gas | New curb & sidewalk | Caution |
| IL 29 (Main St.) | Lt 45' to Rt 68' | 123+07 to 123+30 | 2" PE buried gas | New curb & wall | Relocate |
| | | | | | |
| Silver St. | Lt 10' to Rt 45' | 21+10 to 21+37 | 4" PE buried gas | New curb & grading | Caution |
| Silver St. | Lt 20' to Rt 20' | 21+70 | 4" PE buried gas | New inlet & 12" SS | Relocate |
| Silver St. | Lt 19' | 22+65 | 4" PE buried gas | New wall end | Relocate |
| | | | | | |
| Johnson St. | Lt 17' | 30+68 to 30+80 | 2" buried gas | New curb | Caution |

NOTE: Please check all your facilities within the construction limits of this project.

Illinois Department of Transportation

**Status of Utilities** (Final 2/15/23)

**Name of Utility Company**

**AT & T**

| | |
|---|---|
| Route | FAP 669/673 (IL8 & IL116) (US 24/IL 29) |
| Section | 13((HVB,HB-3))BR-1,R |
| County | Tazewell |
| Contract No. | 68C55 |
| Catalog No. | 035206-00D |

| Route | Offset | Location | Type of Utility | Type of Conflict | Disposition |
|---|---|---|---|---|---|
| IL 29 (Main St.) | Rt 23' | 97+27 | Manhole | New pavement | Adjust |
| IL 29 (Main St.) | Rt 18' | 98+62 | 13"x13" duct | New 12" SS | Caution |
| IL 29 (Main St.) | Rt 24' | 99+49 | 13"x13" duct | 24" SS removal | Caution |
| IL 29 (Main St.) | Rt 34' | 99+94 | 13"x13" duct | New 36" SS | Caution |
| IL 29 (Main St.) | Rt 38' | 100+23 | 13"x13" duct | 36" SS removal | Caution |
| IL 29 (Main St.) | Lt 80' | 100+70 | 1200 pr 3 pack | New inlet | Relocate |
| IL 29 (Main St.) | @ Centerline | 100+70 | 1200 pr 3 pack | New median & 36" SS | Relocate |
| IL 29 (Main St.) | Rt 42' | 100+67 | Manhole | New pavement | Adjust (see Note *2) |
| IL 29 (Main St.) | Rt 34' | 102+36 | 9"x18" duct | 12" SS removal & New 15" SS | Caution |
| IL 29 (Main St.) | Rt 31' | 104+70 | 9"x18" duct | New 12" SS | Caution |
| IL 29 (Main St.) | Rt 30' | 108+05 | Manhole | New pavement | Adjust |
| IL 29 (Main St.) | Rt 30' | 108+65 | 9"x12" duct | 30" SS removal | Caution |
| IL 29 (Main St.) | Rt 30' to 34' | 109+00 to 110+10 | 9"x12" duct | 24" SS removal, (3) new inlets, MH & SS | Caution |
| IL 29 (Main St.) | Rt 75' to Lt 75' | 114+26 | Copper | New walls each side | Relocate |
| IL 29 (Main St.) | Rt 32' | 116+40 | Manhole | New pavement | Adjust |
| IL 29 (Main St.) | Rt 32' | 117+88 | 9"x13" duct | New inlet | Caution |
| IL 29 (Main St.) | Rt 32' | 119+88 | 9"x13" duct | New inlet | Caution |
| IL 29 (Main St.) | Rt 32' | 119+90 | 9"x13" duct | 24" SS removal | Caution |
| IL 29 (Main St.) | Rt 30' | 120+90 to 121+10 | 9"x13" duct | New double inlet | Caution |
| IL 29 (Main St.) | Rt 30' | 122+17 | 9"x19" duct | New inlet | Caution |
| IL 29 (Main St.) | Rt 32' | 123+46 | Manhole | New pavement | Adjust |
| | | | | | |

NOTE: Please check all your facilities within the construction limits of this project.

*2 - NOTE: This manhole & lid must be traffic rated.

Illinois Department of Transportation

**Status of Utilities** (Final 4/16/2025)

**Name of Utility Company**

**Bluebird Networks**

| | |
|---|---|
| Route | FAP 669/673 (IL8 & IL116) |
| Section | 13((HVB,HB-3))BR-1,R |
| County | Tazewell |
| Contract No. | 68C55 |
| Catalog No. | 035206-00D |

| Route | Offset | Location | Type of Utility | Type of Conflict | Disposition |
|---|---|---|---|---|---|
| | | | | | |
| Old Silver St. & Main St. | East side | Project area | FO in conduit | New road relocation | Relocate |

NOTE: Please check all your facilities within the construction limits of this project.

Illinois Department of Transportation

**Status of Utilities** (Final 2/15/23)

**Name of Utility Company**

**Stratus**

| | |
|---|---|
| Route | FAP 669/673 (IL8 & IL116) (US 24/IL 29 |
| Section | 13((HVB,HB-3))BR-1,R |
| County | Tazewell |
| Contract No. | 68C55 |
| Catalog No. | 035206-00D |

| Route | Offset | Location | Type of Utility | Type of Conflict | Disposition |
|---|---|---|---|---|---|
| IL 29 (Main St.) | Rt 38' to 50' | 98+25 to 98+68 | FO in conduit | New pvt., curb & inlet | Relocate |
| IL 29 (Main St.) | Rt 87' | 99+08 | FO in conduit | New 12" SS | Caution |
| IL 29 (Main St.) | Rt 80' | 100+00 | FO in conduit | New 36" SS | Caution |
| IL 29 (Main St.) | Rt 77' | 100+04 | FO in conduit | 36" Storm sewer removal | Caution |
| IL 29 (Main St.) | Rt 81' | 100+27 | FO in conduit | New 15" SS & outlet | Relocate |
| IL 29 (Main St.) | Rt 41' | 104+70 | FO in conduit | New MH | Caution |
| IL 29 (Main St.) | Rt 43' | 105+20 to 106+00 | FO in conduit | New Pier & Removal of Old Pier | Caution |
| IL 29 (Main St.) | Rt 60' | 107+50 to 113+50 | FO in conduit | New SS & wall | Relocate |
| IL 29 (Main St.) | Rt 47' | 114+50 to 115+10 | FO in conduit | New 12" SS & inlet | Caution |
| IL 29 (Main St.) | Rt 44' | 119+88 | FO in conduit | New 12" SS | Caution |

NOTE: Please check all your facilities within the construction limits of this project.

Printed 2/15/2023

D4 PD0100 (Rev. 02/24/10)

Illinois Department of Transportation

**Status of Utilities** (Final 2/15/23)

**Name of Utility Company**

**I3 Broadband**

| | |
|---|---|
| Route | FAP 669/673 (IL8 & IL116) (US 24/IL 29 |
| Section | 13((HVB,HB-3))BR-1,R |
| County | Tazewell |
| Contract No. | 68C55 |
| Catalog No. | 035206-00D |

| Route | Offset | Location | Type of Utility | Type of Conflict | Disposition |
|---|---|---|---|---|---|
| IL 29 (Main St.) | Lt 35' | 98+66 | Handhole | New sidewalk | Adjust |
| IL 29 (Main St.) | Lt 65' to Rt 180' | 99+00 | FO in conduit & ped | New pavt, curbs, ect. | Relocate |
| IL 29 (Main St.) | Lt 38' | 100+40 to 100+52 | FO in conduit | New inlet & 18" SS | Relocate |
| IL 29 (Main St.) | Lt 38' | 100+52 to 102+26 | FO in conduit | New base & pavt | Caution |
| IL 29 (Main St.) | Rt 97' to Rt 42' | 99+00 to 101+10 | FO in conduit | New wall & pavement removal | Not in service |
| IL 29 (Main St.) | Rt 42' | 101+10 | Pole | New ramp | Remove |
| IL 29 (Main St.) | Rt 42' to Rt 102' | 101+10 | FO in conduit | New wall | Not in service |
| IL 29 (Main St.) | Lt 38' | 102+26 to 102+34 | FO in conduit | New inlet | Relocate |
| IL 29 (Main St.) | Lt 38' | 102+40 to 104+65 | FO in conduit | New curb | Caution |
| IL 29 (Main St.) | Lt 27' | 104+65 to 104+73 | FO in conduit | New inlet | Relocate |
| IL 29 (Main St.) | Lt varies | 104+73 to 106+96 | FO in conduit | New base & pavt | Caution |
| IL 29 (Main St.) | Lt 46' | 106+96 to 107+04 | FO in conduit | New inlet & 12" SS | Relocate |
| IL 29 (Main St.) | Lt varies | 107+04 to 109+20 | FO in conduit | New base & pavt | Relocate |
| IL 29 (Main St.) | Lt varies | 109+20 to 109+96 | FO in conduit | New ditch cut | Caution |
| IL 29 (Main St.) | Lt 40' | 109+96 to 110+05 | FO in conduit | New MH & 60" SS | Relocate |
| IL 29 (Main St.) | Lt varies | 112+00 to 121+50 | FO in conduit | New base & pavt | Relocate |
| IL 29 (Main St.) | Lt varies | 122+00 to 122+75 | FO in conduit | New sidewalk | Caution |
| | | | | | |
| Johnson St. | Lt 23' to Rt 53' | 30+54 | FO in conduit & ped | New pavt, curbs, ect. | Relocate |
| | | | | | |
| Silver St. | Lt 20' to Rt 20' | 22+65 | FO in conduit | New pavement & | Caution |
| Silver St. | Lt 21' | 30+61 | Handhole | New sidewalk | Adjust |

NOTE: Please check all your facilities within the construction limits of this project.

Printed 4/17/2023

D4 PD0100 (Rev. 02/24/10)

STOUTIL-02

MODEL: Default
FILE NAME: pw:\\mbs-us-pw.bentley.com:mbs-us-pw-931\Documents\Chicago_IL\01 Projects\179740 IDOT Cedar\Sheet\D468C55-sht-status-util02.dgn

Michael Baker INTERNATIONAL
200 W Adams Street
Suite 1800
Chicago, IL 60606
PH: 312.707.8700
FAX: 312.707.8804

| | | |
|---|---|---|
| USER NAME = Winson.Teng | DESIGNED - TOM | REVISED - |
| | DRAWN - DCL | REVISED - |
| PLOT SCALE = 2.0000 ' / in. | CHECKED - | REVISED - |
| PLOT DATE = 5/5/2025 | DATE - 4/08/2025 | REVISED - |

**STATE OF ILLINOIS**
**DEPARTMENT OF TRANSPORTATION**

**CEDAR ST (IL-8/IL-116) OVER TZPR & IL-29**
**STATUS OF UTILITIES TO BE ADJUSTED**

SCALE: NONE | SHEET 2 OF 2 SHEETS | STA. TO STA.

| F.A.P. RTE. | SECTION | COUNTY | TOTAL SHEETS | SHEET NO. |
|---|---|---|---|---|
| VAR. | 13 (HVB, HB-3) BR-1;R | TAZEWELL | 1173 | 7 |
| | | CONTRACT NO. 68C55 | | |
| | ILLINOIS | FED. AID PROJECT | | |

| | | | | CONSTRUCTION CODE | | | | | | | | |
|---|---|---|---|---|---|---|---|---|---|---|---|---|
| | | | | FED / STATE 80% / 20% | FED / STATE 80% / 20% | FED / STATE 80% / 20% | FED / STATE 80% / 20% | FED / STATE 80% / 20% | FED / STATE 80% / 20% | FED / STATE 80% / 20% | 80% FEDERAL 10% STATE 10% CITY | 100% CITY |
| | | | | ROADWAY | BRIDGE | BRIDGE | RETAINING WALL | RETAINING WALL | RETAINING WALL | SAFETY | SAFETY | UTILITY |
| CODE NO. | ITEM | UNIT | TOTAL QUANTITY | 0004 URBAN | 0010 S.N. 090-0182 | 0010 S.N. 090-0183 | 0044 S.N. 090-8517 | 0044 S.N. 090-8520 | 0044 S.N. 090-8518 | 0021 URBAN | 0021 URBAN | 0043 URBAN |
| 20100110 | TREE REMOVAL (6 TO 15 UNITS DIAMETER) | UNIT | 178 | 178 | | | | | | | | |
| 20100210 | TREE REMOVAL (OVER 15 UNITS DIAMETER) | UNIT | 134 | 134 | | | | | | | | |
| 20100500 | TREE REMOVAL, ACRES | ACRE | 2 | 2 | | | | | | | | |
| 20101000 | TEMPORARY FENCE | FOOT | 383 | 383 | | | | | | | | |
| 20101100 | TREE TRUNK PROTECTION | EACH | 13 | 13 | | | | | | | | |
| 20200100 | EARTH EXCAVATION | CU YD | 31,440 | 31,440 | | | | | | | | |
| * 20201200 | REMOVAL AND DISPOSAL OF UNSUITABLE MATERIAL | CU YD | 3,225 | 3,225 | | | | | | | | |
| 20700220 | POROUS GRANULAR EMBANKMENT | CU YD | 790 | 790 | | | | | | | | |
| 20800150 | TRENCH BACKFILL | CU YD | 3,527 | 3,527 | | | | | | | | |
| 21001000 | GEOTECHNICAL FABRIC FOR GROUND STABILIZATION | SQ YD | 37,452 | 37,452 | | | | | | | | |
| 21101505 | TOPSOIL EXCAVATION AND PLACEMENT | CU YD | 1,620 | 1,620 | | | | | | | | |
| * 25000300 | SEEDING, CLASS 3 | ACRE | 3.25 | 3.25 | | | | | | | | |
| * 25000322 | SEEDING, CLASS 5A | ACRE | 4.50 | 4.50 | | | | | | | | |
| * 25000400 | NITROGEN FERTILIZER NUTRIENT | POUND | 688 | 688 | | | | | | | | |

* SPECIALTY ITEM

SOQ-01

Michael Baker INTERNATIONAL
200 W Adams Street
Suite 1800
Chicago, IL 60606
P:+1 312.707.8770
FAX: 312.707.8804

| | | |
|---|---|---|
| USER NAME = Winson.Teng | DESIGNED - JAL | REVISED - |
| | DRAWN - DCL | REVISED - |
| PLOT SCALE = 200.0000 ' / in. | CHECKED - RBB | REVISED - |
| PLOT DATE = 5/6/2025 | DATE - 4/08/2025 | REVISED - |

**STATE OF ILLINOIS**
**DEPARTMENT OF TRANSPORTATION**

**CEDAR ST. (IL-8/IL-116) OVER TZPR & IL-29**
**SUMMARY OF QUANTITIES**

SCALE: NO SCALE | SHEET 1 OF 26 SHEETS | STA. TO STA.

| F.A.P. RTE. | SECTION | COUNTY | TOTAL SHEETS | SHEET NO. |
|---|---|---|---|---|
| VAR. | 13 (HVB, HB-3) 8R-1:R | TAZEWELL | 1173 | 8 |
| | | CONTRACT NO. 68C55 | | |
| | ILLINOIS | FED. AID PROJECT | | |

REV. 7/1/25

| | CODE NO. | ITEM | UNIT | TOTAL QUANTITY | CONSTRUCTION CODE | | | | | | | | |
|---|---|---|---|---|---|---|---|---|---|---|---|---|---|
| | | | | | FED / STATE 80% / 20% | FED / STATE 80% / 20% | FED / STATE 80% / 20% | FED / STATE 80% / 20% | FED / STATE 80% / 20% | FED / STATE 80% / 20% | FED / STATE 80% / 20% | 80% FEDERAL 10% STATE 10% CITY | 100% CITY |
| | | | | | ROADWAY | BRIDGE | BRIDGE | RETAINING WALL | RETAINING WALL | RETAINING WALL | SAFETY | SAFETY | UTILITY |
| | | | | | 0004 | 0010 | 0010 | 0044 | 0044 | 0044 | 0021 | 0021 | 0043 |
| | | | | | URBAN | S.N. 090-0182 | S.N. 090-0183 | S.N. 090-8517 | S.N. 090-8520 | S.N. 090-8518 | URBAN | URBAN | URBAN |
| * | 25000500 | PHOSPHORUS FERTILIZER NUTRIENT | POUND | 688 | 688 | | | | | | | | |
| * | 25000600 | POTASSIUM FERTILIZER NUTRIENT | POUND | 688 | 688 | | | | | | | | |
| △ | 25000750 | MOWING | ACRE | 49 | 49 | | | | | | | | |
| | 25000775 | SELECTIVE MOWING STAKES | EACH | 33 | 33 | | | | | | | | |
| * | 25100115 | MULCH, METHOD 2 | ACRE | 1 | 1 | | | | | | | | |
| * | 25200110 | SODDING, SALT TOLERANT | SQ YD | 3,159 | 3,159 | | | | | | | | |
| | 25200200 | SUPPLEMENTAL WATERING | UNIT | 7 | 7 | | | | | | | | |
| | 28000250 | TEMPORARY EROSION CONTROL SEEDING | POUND | 773 | 773 | | | | | | | | |
| | 28000305 | TEMPORARY DITCH CHECKS | FOOT | 150 | 150 | | | | | | | | |
| | 28000315 | AGGREGATE DITCH CHECKS | TON | 0.3 | 0.3 | | | | | | | | |
| | 28000400 | PERIMETER EROSION BARRIER | FOOT | 4,464 | 4,464 | | | | | | | | |
| | 28000500 | INLET AND PIPE PROTECTION | EACH | 92 | 92 | | | | | | | | |
| | 28001100 | TEMPORARY EROSION CONTROL BLANKET | SQ YD | 33,968 | 33,968 | | | | | | | | |
| | 28100105 | STONE RIPRAP, CLASS A3 | SQ YD | 154 | 154 | | | | | | | | |

* SPECIALTY ITEM △ NON-PARTICIPATING (100% STATE)

SOQ-02

| | | | | CONSTRUCTION CODE | | | | | | | | |
|---|---|---|---|---|---|---|---|---|---|---|---|---|
| | | | | FED / STATE 80% / 20% | FED / STATE 80% / 20% | FED / STATE 80% / 20% | FED / STATE 80% / 20% | FED / STATE 80% / 20% | FED / STATE 80% / 20% | FED / STATE 80% / 20% | 80% FEDERAL 10% STATE 10% CITY | 100% CITY |
| | | | | ROADWAY | BRIDGE | BRIDGE | RETAINING WALL | RETAINING WALL | RETAINING WALL | SAFETY | SAFETY | UTILITY |
| CODE NO. | ITEM | UNIT | TOTAL QUANTITY | 0004 | 0010 | 0010 | 0044 | 0044 | 0044 | 0021 | 0021 | 0043 |
| | | | | URBAN | S.N. 090-0182 | S.N. 090-0183 | S.N. 090-8517 | S.N. 090-8520 | S.N. 090-8518 | URBAN | URBAN | URBAN |
| 28100107 | STONE RIPRAP, CLASS A4 | SQ YD | 468 | 468 | | | | | | | | |
| 28100109 | STONE RIPRAP, CLASS A5 | SQ YD | 30 | 30 | | | | | | | | |
| 28200200 | FILTER FABRIC | SQ YD | 498 | 498 | | | | | | | | |
| 30300112 | AGGREGATE SUBGRADE IMPROVEMENT 12" | SQ YD | 37,452 | 37,452 | | | | | | | | |
| 31101860 | SUBBASE GRANULAR MATERIAL, TYPE B 24" | SQ YD | 101 | | | | | | 101 | | | |
| 31101900 | SUBBASE GRANULAR MATERIAL, TYPE C | TON | 502 | 502 | | | | | | | | |
| 31200100 | STABILIZED SUBBASE 4" | SQ YD | 9,082 | 9,082 | | | | | | | | |
| 35100700 | AGGREGATE BASE COURSE, TYPE A 8" | SQ YD | 81 | 81 | | | | | | | | |
| 40600275 | BITUMINOUS MATERIALS (PRIME COAT) | POUND | 578 | 578 | | | | | | | | |
| 40600295 | POLYMERIZED BITUMINOUS MATERIALS (TACK COAT) | POUND | 1,101 | 1,101 | | | | | | | | |
| 40600905 | POLYMERIZED HOT-MIX ASPHALT BINDER COURSE (HAND METHOD), N50 | TON | 14 | 14 | | | | | | | | |
| 40600906 | POLYMERIZED HOT-MIX ASPHALT BINDER COURSE (HAND METHOD), N70 | TON | 71 | 71 | | | | | | | | |
| 40600982 | HOT-MIX ASPHALT SURFACE REMOVAL - BUTT JOINT | SQ YD | 385 | 385 | | | | | | | | |
| 40600990 | TEMPORARY RAMP | SQ YD | 259 | 259 | | | | | | | | |

* SPECIALTY ITEM

| | | | | CONSTRUCTION CODE | | | | | | | | |
|---|---|---|---|---|---|---|---|---|---|---|---|---|
| | | | | FED / STATE 80% / 20% | FED / STATE 80% / 20% | FED / STATE 80% / 20% | FED / STATE 80% / 20% | FED / STATE 80% / 20% | FED / STATE 80% / 20% | FED / STATE 80% / 20% | 80% FEDERAL 10% STATE 10% CITY | 100% CITY |
| | | | | ROADWAY | BRIDGE | BRIDGE | RETAINING WALL | RETAINING WALL | RETAINING WALL | SAFETY | SAFETY | UTILITY |
| CODE NO. | ITEM | UNIT | TOTAL QUANTITY | 0004 | 0010 | 0010 | 0044 | 0044 | 0044 | 0021 | 0021 | 0043 |
| | | | | URBAN | S.N. 090-0182 | S.N. 090-0183 | S.N. 090-8517 | S.N. 090-8520 | S.N. 090-8518 | URBAN | URBAN | URBAN |
| 40603208 | POLYMERIZED HOT-MIX ASPHALT BINDER COURSE, IL-9.5, N70 | TON | 32 | 32 | | | | | | | | |
| 40603235 | POLYMERIZED HOT-MIX ASPHALT BINDER COURSE, IL-19.0, N70 | TON | 93 | 93 | | | | | | | | |
| 40604050 | HOT-MIX ASPHALT SURFACE COURSE, IL-9.5, MIX "C", N50 | TON | 31 | 31 | | | | | | | | |
| 40604172 | POLYMERIZED HOT-MIX ASPHALT SURFACE COURSE, IL-9.5, MIX "E", N70 | TON | 128 | 128 | | | | | | | | |
| 42000080 | PAVEMENT CONNECTOR (PCC) FOR BRIDGE APPROACH SLAB | SQ YD | 361 | 361 | | | | | | | | |
| 42000401 | PORTLAND CEMENT CONCRETE PAVEMENT 9" (JOINTED) | SQ YD | 27,298 | 27,298 | | | | | | | | |
| 42001300 | PROTECTIVE COAT | SQ YD | 36,600 | 36,600 | | | | | | | | |
| 42300300 | PORTLAND CEMENT CONCRETE DRIVEWAY PAVEMENT, 7 INCH | SQ YD | 93 | 93 | | | | | | | | |
| 42400100 | PORTLAND CEMENT CONCRETE SIDEWALK 4 INCH | SQ FT | 17,659 | 17,659 | | | | | | | | |
| * 42400800 | DETECTABLE WARNINGS | SQ FT | 131 | 131 | | | | | | | | |
| 44000100 | PAVEMENT REMOVAL | SQ YD | 28,173 | 28,173 | | | | | | | | |
| 44000157 | HOT-MIX ASPHALT SURFACE REMOVAL, 2" | SQ YD | 679 | 679 | | | | | | | | |
| 44000200 | DRIVEWAY PAVEMENT REMOVAL | SQ YD | 2,239 | 2,239 | | | | | | | | |
| 44000500 | COMBINATION CURB AND GUTTER REMOVAL | FOOT | 5,707 | 5,707 | | | | | | | | |

* SPECIALTY ITEM

SOQ-04

| CODE NO. | ITEM | UNIT | TOTAL QUANTITY | CONSTRUCTION CODE | | | | | | | | |
|---|---|---|---|---|---|---|---|---|---|---|---|---|
| | | | | FED / STATE 80% / 20% | FED / STATE 80% / 20% | FED / STATE 80% / 20% | FED / STATE 80% / 20% | FED / STATE 80% / 20% | FED / STATE 80% / 20% | FED / STATE 80% / 20% | 80% FEDERAL 10% STATE 10% CITY | 100% CITY |
| | | | | ROADWAY | BRIDGE | BRIDGE | RETAINING WALL | RETAINING WALL | RETAINING WALL | SAFETY | SAFETY | UTILITY |
| | | | | 0004 | 0010 | 0010 | 0044 | 0044 | 0044 | 0021 | 0021 | 0043 |
| | | | | URBAN | S.N. 090-0182 | S.N. 090-0183 | S.N. 090-8517 | S.N. 090-8520 | S.N. 090-8518 | URBAN | URBAN | URBAN |
| 44000600 | SIDEWALK REMOVAL | SQ FT | 13,083 | 13,083 | | | | | | | | |
| 44003100 | MEDIAN REMOVAL | SQ FT | 10,631 | 10,631 | | | | | | | | |
| 44004000 | PAVED DITCH REMOVAL | FOOT | 2,028 | 2,028 | | | | | | | | |
| 44004250 | PAVED SHOULDER REMOVAL | SQ YD | 5,403 | 5,403 | | | | | | | | |
| 44201335 | CLASS C PATCHES, TYPE IV, 8 INCH | SQ YD | 1,063 | 1,063 | | | | | | | | |
| 48101600 | AGGREGATE SHOULDERS, TYPE B 8" | SQ YD | 475 | 475 | | | | | | | | |
| 48300400 | PORTLAND CEMENT CONCRETE SHOULDERS 9" | SQ YD | 5,954 | 5,954 | | | | | | | | |
| 50100300 | REMOVAL OF EXISTING STRUCTURES NO. 1 | EACH | 1 | | 1 | | | | | | | |
| 50100400 | REMOVAL OF EXISTING STRUCTURES NO. 2 | EACH | 1 | | | 1 | | | | | | |
| 50102400 | CONCRETE REMOVAL | CU YD | 2 | 2 | | | | | | | | |
| 50104400 | CONCRETE HEADWALL REMOVAL | EACH | 9 | 9 | | | | | | | | |
| 50105220 | PIPE CULVERT REMOVAL | FOOT | 281 | 281 | | | | | | | | |
| 50157300 | PROTECTIVE SHIELD | SQ YD | 6,998 | | 6,586 | 412 | | | | | | |
| 50200100 | STRUCTURE EXCAVATION | CU YD | 10,282 | 5,141 | 1,547 | 601 | 1,788 | 1,039 | 166 | | | |

* SPECIALTY ITEM

| | CODE NO. | ITEM | UNIT | TOTAL QUANTITY | CONSTRUCTION CODE | | | | | | | | |
|---|---|---|---|---|---|---|---|---|---|---|---|---|---|
| | | | | | FED / STATE 80% / 20% | FED / STATE 80% / 20% | FED / STATE 80% / 20% | FED / STATE 80% / 20% | FED / STATE 80% / 20% | FED / STATE 80% / 20% | FED / STATE 80% / 20% | 80% FEDERAL 10% STATE 10% CITY | 100% CITY |
| | | | | | ROADWAY | BRIDGE | BRIDGE | RETAINING WALL | RETAINING WALL | RETAINING WALL | SAFETY | SAFETY | UTILITY |
| | | | | | 0004 | 0010 | 0010 | 0044 | 0044 | 0044 | 0021 | 0021 | 0043 |
| | | | | | URBAN | S.N. 090-0182 | S.N. 090-0183 | S.N. 090-8517 | S.N. 090-8520 | S.N. 090-8518 | URBAN | URBAN | URBAN |
| * | 50200450 | REMOVAL AND DISPOSAL OF UNSUITABLE MATERIAL FOR STRUCTURES | CU YD | 67 | | | | | | 67 | | | |
| | 50300225 | CONCRETE STRUCTURES | CU YD | 3,873.4 | | 1,839.4 | 448.6 | 983.3 | 602.1 | | | | |
| | 50300255 | CONCRETE SUPERSTRUCTURE | CU YD | 3,316.4 | | 2,809.3 | 507.1 | | | | | | |
| | 50300280 | CONCRETE ENCASEMENT | CU YD | 52 | | 36 | 16 | | | | | | |
| | 50300300 | PROTECTIVE COAT | SQ YD | 13,205 | | 10,986 | 2,179 | | | 40 | | | |
| | 50301350 | CONCRETE SUPERSTRUCTURE (APPROACH SLAB) | CU YD | 416.1 | | 269.2 | 146.9 | | | | | | |
| | 50500105 | FURNISHING AND ERECTING STRUCTURAL STEEL | L SUM | 1 | | 0.89 | 0.11 | | | | | | |
| | 50500505 | STUD SHEAR CONNECTORS | EACH | 41,507 | | 27,349 | 7,248 | 4,540 | 2,370 | | | | |
| | 50800105 | REINFORCEMENT BARS | POUND | 98,890 | | 98,890 | | | | | | | |
| | 50800205 | REINFORCEMENT BARS, EPOXY COATED | POUND | 1,665,460 | | 1,212,310 | 259,310 | 111,330 | 76,830 | 5,680 | | | |
| | 50800515 | BAR SPLICERS | EACH | 86 | | 86 | | | | | | | |
| | 51100100 | SLOPE WALL 4 INCH | SQ YD | 1,813 | | 1,038 | 775 | | | | | | |
| | 51201600 | FURNISHING STEEL PILES HP12X53 | FOOT | 10,045 | | 5,288 | 4,757 | | | | | | |
| | 51202305 | DRIVING PILES | FOOT | 10,045 | | 5,288 | 4,757 | | | | | | |

* SPECIALTY ITEM

SOO-06

MODEL: Default
FILE NAME: pw:\\mbi-us-pw.bentley.com:mbi-us-pw-03\Documents\Chicago IL\01 Projects\179740 IDOT Cedar\SHEET PHASE 6 CADD\CAD Sheets\D468C55-sht-SOO06.dgn

Michael Baker INTERNATIONAL
200 W Adams Street
Suite 1800
Chicago, IL 60606
PH: 312.707.8770
FAX: 312.707.8804

| | | |
|---|---|---|
| USER NAME = Winson.Teng | DESIGNED - JAL | REVISED - |
| | DRAWN - DCL | REVISED - |
| PLOT SCALE = 200.0000 ' / in. | CHECKED - RBB | REVISED - |
| PLOT DATE = 5/6/2025 | DATE - 4/08/2025 | REVISED - |

**STATE OF ILLINOIS**
**DEPARTMENT OF TRANSPORTATION**

**CEDAR ST. (IL-8/IL-116) OVER TZPR & IL-29**
**SUMMARY OF QUANTITIES**

SCALE: NO SCALE | SHEET 6 OF 26 SHEETS | STA. TO STA.

| F.A.P. RTE. | SECTION | COUNTY | TOTAL SHEETS | SHEET NO. |
|---|---|---|---|---|
| VAR. | 13 (HVB, HB-3) 8R-1:R | TAZEWELL | 1173 | 13 |
| | | CONTRACT NO. 68C55 | | |
| | ILLINOIS | FED. AID PROJECT | | |

REV. 7/1/25

| | CODE NO. | ITEM | UNIT | TOTAL QUANTITY | CONSTRUCTION CODE | | | | | | | | |
|---|---|---|---|---|---|---|---|---|---|---|---|---|---|
| | | | | | FED / STATE 80% / 20% | FED / STATE 80% / 20% | FED / STATE 80% / 20% | FED / STATE 80% / 20% | FED / STATE 80% / 20% | FED / STATE 80% / 20% | FED / STATE 80% / 20% | 80% FEDERAL 10% STATE 10% CITY | 100% CITY |
| | | | | | ROADWAY | BRIDGE | BRIDGE | RETAINING WALL | RETAINING WALL | RETAINING WALL | SAFETY | SAFETY | UTILITY |
| | | | | | 0004 | 0010 | 0010 | 0044 | 0044 | 0044 | 0021 | 0021 | 0043 |
| | | | | | URBAN | S.N. 090-0182 | S.N. 090-0183 | S.N. 090-8517 | S.N. 090-8520 | S.N. 090-8518 | URBAN | URBAN | URBAN |
| | 51203600 | TEST PILE STEEL HP12X53 | EACH | 12 | | 7 | 5 | | | | | | |
| | 51204650 | PILE SHOES | EACH | 207 | | 72 | 95 | | 40 | | | | |
| | 51500100 | NAME PLATES | EACH | 4 | | 1 | 1 | 1 | 1 | | | | |
| | 51602000 | PERMANENT CASING | FOOT | 735 | | 735 | | | | | | | |
| * | 51603000 | DRILLED SHAFT IN SOIL | CU YD | 489 | | 489 | | | | | | | |
| * | 51604000 | DRILLED SHAFT IN ROCK | CU YD | 114 | | 114 | | | | | | | |
| | 52000030 | PREFORMED JOINT SEAL 2 1/2" | FOOT | 746 | | 746 | | | | | | | |
| | 52000110 | PREFORMED JOINT STRIP SEAL | FOOT | 145 | | 31 | 114 | | | | | | |
| | 52100020 | ELASTOMERIC BEARING ASSEMBLY, TYPE II | EACH | 20 | | 20 | | | | | | | |
| | 52100510 | ANCHOR BOLTS, 3/4" | EACH | 64 | | | 64 | | | | | | |
| | 52100520 | ANCHOR BOLTS, 1" | EACH | 32 | | | 32 | | | | | | |
| | 52100530 | ANCHOR BOLTS, 1 1/4" | EACH | 32 | | | 32 | | | | | | |
| | 52100540 | ANCHOR BOLTS, 1 1/2" | EACH | 228 | | 228 | | | | | | | |
| | 52100560 | ANCHOR BOLTS, 2" | EACH | 88 | | 88 | | | | | | | |

* SPECIALTY ITEM

SOQ-07

| CODE NO. | ITEM | UNIT | TOTAL QUANTITY | CONSTRUCTION CODE | | | | | | | | |
|---|---|---|---|---|---|---|---|---|---|---|---|---|
| | | | | FED / STATE 80% / 20% | FED / STATE 80% / 20% | FED / STATE 80% / 20% | FED / STATE 80% / 20% | FED / STATE 80% / 20% | FED / STATE 80% / 20% | FED / STATE 80% / 20% | 80% FEDERAL 10% STATE 10% CITY | 100% CITY |
| | | | | ROADWAY | BRIDGE | BRIDGE | RETAINING WALL | RETAINING WALL | RETAINING WALL | SAFETY | SAFETY | UTILITY |
| | | | | 0004 | 0010 | 0010 | 0044 | 0044 | 0044 | 0021 | 0021 | 0043 |
| | | | | URBAN | S.N. 090-0182 | S.N. 090-0183 | S.N. 090-8517 | S.N. 090-8520 | S.N. 090-8518 | URBAN | URBAN | URBAN |
| 52200015 | PERMANENT SHEET PILING | SQ FT | 2,318 | 2,318 | | | | | | | | |
| 52200020 | TEMPORARY SOIL RETENTION SYSTEM | SQ FT | 2,910 | | 702 | | | 2,208 | | | | |
| 52200100 | FURNISHING SOLDIER PILES (HP SECTION) | FOOT | 5,432 | 47 | | | | 5,385 | | | | |
| 52200105 | FURNISHING SOLDIER PILES (W SECTION) | FOOT | 9,504 | | | | 9,504 | | | | | |
| 52200150 | DRIVING SOLDIER PILES | FOOT | 5,432 | 47 | | | | 5,385 | | | | |
| 52200200 | DRILLING AND SETTING SOLDIER PILES (IN SOIL) | CU FT | 41,340 | | | | 41,340 | | | | | |
| 52200205 | DRILLING AND SETTING SOLDIER PILES (IN ROCK) | CU FT | 1,560 | | | | 1,560 | | | | | |
| 52200250 | UNTREATED TIMBER LAGGING | SQ FT | 24,670 | | | | 15,626 | 9,044 | | | | |
| 52200255 | TREATED TIMBER LAGGING | SQ FT | 35 | 35 | | | | | | | | |
| 52200900 | CONCRETE STRUCTURES (RETAINING WALL) | CU YD | 61.5 | | | | | | 61.5 | | | |
| 52318802 | DRAINAGE SYSTEM FOR STRUCTURES | L SUM | 1 | | 1 | | | | | | | |
| 54213657 | PRECAST REINFORCED CONCRETE FLARED END SECTIONS 12" | EACH | 2 | 2 | | | | | | | | |
| 54213669 | PRECAST REINFORCED CONCRETE FLARED END SECTIONS 24" | EACH | 3 | 3 | | | | | | | | |
| 54213681 | PRECAST REINFORCED CONCRETE FLARED END SECTIONS 36" | EACH | 5 | 5 | | | | | | | | |

* SPECIALTY ITEM

| CODE NO. | ITEM | UNIT | TOTAL QUANTITY | CONSTRUCTION CODE | | | | | | | | |
|---|---|---|---|---|---|---|---|---|---|---|---|---|
| | | | | FED / STATE 80% / 20% | FED / STATE 80% / 20% | FED / STATE 80% / 20% | FED / STATE 80% / 20% | FED / STATE 80% / 20% | FED / STATE 80% / 20% | FED / STATE 80% / 20% | 80% FEDERAL 10% STATE 10% CITY | 100% CITY |
| | | | | ROADWAY | BRIDGE | BRIDGE | RETAINING WALL | RETAINING WALL | RETAINING WALL | SAFETY | SAFETY | UTILITY |
| | | | | 0004 | 0010 | 0010 | 0044 | 0044 | 0044 | 0021 | 0021 | 0043 |
| | | | | URBAN | S.N. 090-0182 | S.N. 090-0183 | S.N. 090-8517 | S.N. 090-8520 | S.N. 090-8518 | URBAN | URBAN | URBAN |
| 54213705 | PRECAST REINFORCED CONCRETE FLARED END SECTIONS 60" | EACH | 2 | 2 | | | | | | | | |
| 54260315 | TRAVERSABLE PIPE GRATE FOR CONCRETE END SECTION | FOOT | 8 | 8 | | | | | | | | |
| 550A0050 | STORM SEWERS, CLASS A, TYPE 1 12" | FOOT | 586 | 586 | | | | | | | | |
| 550A0070 | STORM SEWERS, CLASS A, TYPE 1 15" | FOOT | 85 | 85 | | | | | | | | |
| 550A0090 | STORM SEWERS, CLASS A, TYPE 1 18" | FOOT | 202 | 202 | | | | | | | | |
| 550A0120 | STORM SEWERS, CLASS A, TYPE 1 24" | FOOT | 50 | 50 | | | | | | | | |
| 550A0160 | STORM SEWERS, CLASS A, TYPE 1 36" | FOOT | 47 | 47 | | | | | | | | |
| 550A0210 | STORM SEWERS, CLASS A, TYPE 1 60" | FOOT | 54 | 54 | | | | | | | | |
| 550A0340 | STORM SEWERS, CLASS A, TYPE 2 12" | FOOT | 1,515 | 1,515 | | | | | | | | |
| 550A0360 | STORM SEWERS, CLASS A, TYPE 2 15" | FOOT | 58 | 58 | | | | | | | | |
| 550A0380 | STORM SEWERS, CLASS A, TYPE 2 18" | FOOT | 83 | 83 | | | | | | | | |
| 550A0410 | STORM SEWERS, CLASS A, TYPE 2 24" | FOOT | 453 | 453 | | | | | | | | |
| 550A0450 | STORM SEWERS, CLASS A, TYPE 2 36" | FOOT | 1,974 | 1,974 | | | | | | | | |
| 550A0500 | STORM SEWERS, CLASS A, TYPE 2 60" | FOOT | 190 | 190 | | | | | | | | |

* SPECIALTY ITEM

SOQ-09

| CODE NO. | ITEM | UNIT | TOTAL QUANTITY | CONSTRUCTION CODE | | | | | | | | |
|---|---|---|---|---|---|---|---|---|---|---|---|---|
| | | | | FED / STATE 80% / 20% | FED / STATE 80% / 20% | FED / STATE 80% / 20% | FED / STATE 80% / 20% | FED / STATE 80% / 20% | FED / STATE 80% / 20% | FED / STATE 80% / 20% | 80% FEDERAL 10% STATE 10% CITY | 100% CITY |
| | | | | ROADWAY | BRIDGE | BRIDGE | RETAINING WALL | RETAINING WALL | RETAINING WALL | SAFETY | SAFETY | UTILITY |
| | | | | 0004 | 0010 | 0010 | 0044 | 0044 | 0044 | 0021 | 0021 | 0043 |
| | | | | URBAN | S.N. 090-0182 | S.N. 090-0183 | S.N. 090-8517 | S.N. 090-8520 | S.N. 090-8518 | URBAN | URBAN | URBAN |
| 550A0640 | STORM SEWERS, CLASS A, TYPE 3 12" | FOOT | 88 | 88 | | | | | | | | |
| 550A0680 | STORM SEWERS, CLASS A, TYPE 3 18" | FOOT | 14 | 14 | | | | | | | | |
| 550A0730 | STORM SEWERS, CLASS A, TYPE 3 30" | FOOT | 10 | 10 | | | | | | | | |
| 550A0750 | STORM SEWERS, CLASS A, TYPE 3 36" | FOOT | 64 | 64 | | | | | | | | |
| 550A0800 | STORM SEWERS, CLASS A, TYPE 3 60" | FOOT | 49 | 49 | | | | | | | | |
| 55100500 | STORM SEWER REMOVAL 12" | FOOT | 638 | 638 | | | | | | | | |
| 55100700 | STORM SEWER REMOVAL 15" | FOOT | 534 | 534 | | | | | | | | |
| 55100900 | STORM SEWER REMOVAL 18" | FOOT | 229 | 229 | | | | | | | | |
| 55101200 | STORM SEWER REMOVAL 24" | FOOT | 661 | 661 | | | | | | | | |
| 55101400 | STORM SEWER REMOVAL 30" | FOOT | 236 | 236 | | | | | | | | |
| 55101600 | STORM SEWER REMOVAL 36" | FOOT | 200 | 200 | | | | | | | | |
| 56108300 | ADJUSTING WATER VALVES 8" | EACH | 1 | | | | | | | | | 1 |
| 58600101 | GRANULAR BACKFILL FOR STRUCTURES | CU YD | 919 | | 602 | 243 | | | 74 | | | |
| 58700300 | CONCRETE SEALER | SQ FT | 8,901 | | 5,005 | 3,896 | | | | | | |

* SPECIALTY ITEM

| CODE NO. | ITEM | UNIT | TOTAL QUANTITY | CONSTRUCTION CODE | | | | | | | | |
|---|---|---|---|---|---|---|---|---|---|---|---|---|
| | | | | FED / STATE 80% / 20% | FED / STATE 80% / 20% | FED / STATE 80% / 20% | FED / STATE 80% / 20% | FED / STATE 80% / 20% | FED / STATE 80% / 20% | FED / STATE 80% / 20% | 80% FEDERAL 10% STATE 10% CITY | 100% CITY |
| | | | | ROADWAY | BRIDGE | BRIDGE | RETAINING WALL | RETAINING WALL | RETAINING WALL | SAFETY | SAFETY | UTILITY |
| | | | | 0004 | 0010 | 0010 | 0044 | 0044 | 0044 | 0021 | 0021 | 0043 |
| | | | | URBAN | S.N. 090-0182 | S.N. 090-0183 | S.N. 090-8517 | S.N. 090-8520 | S.N. 090-8518 | URBAN | URBAN | URBAN |
| 59100100 | GEOCOMPOSITE WALL DRAIN | SQ YD | 2,316 | | 306 | 143 | 1,095 | 709 | 63 | | | |
| 60100925 | PIPE DRAINS 8" | FOOT | 110 | 110 | | | | | | | | |
| 60100945 | PIPE DRAINS 12" | FOOT | 54 | 54 | | | | | | | | |
| 60146304 | PIPE UNDERDRAINS FOR STRUCTURES 4" | FOOT | 3,347 | | 324 | 179 | 1,504 | 1,226 | 114 | | | |
| 60146305 | PIPE UNDERDRAINS FOR STRUCTURES (SPECIAL) 4" | FOOT | 276 | 276 | | | | | | | | |
| 60218300 | MANHOLES, TYPE A, 4'-DIAMETER, TYPE 1 FRAME, OPEN LID | EACH | 4 | 4 | | | | | | | | |
| 60218400 | MANHOLES, TYPE A, 4'-DIAMETER, TYPE 1 FRAME, CLOSED LID | EACH | 3 | 3 | | | | | | | | |
| 60219300 | MANHOLES, TYPE A, 4'-DIAMETER, TYPE 11 FRAME AND GRATE | EACH | 4 | 4 | | | | | | | | |
| 60221000 | MANHOLES, TYPE A, 5'-DIAMETER, TYPE 1 FRAME, OPEN LID | EACH | 2 | 2 | | | | | | | | |
| 60221100 | MANHOLES, TYPE A, 5'-DIAMETER, TYPE 1 FRAME, CLOSED LID | EACH | 5 | 5 | | | | | | | | |
| 60222000 | MANHOLES, TYPE A, 5'-DIAMETER, TYPE 11 FRAME AND GRATE | EACH | 1 | 1 | | | | | | | | |
| 60224020 | MANHOLES, TYPE A, 6'-DIAMETER, TYPE 11 FRAME AND GRATE | EACH | 1 | 1 | | | | | | | | |
| 60224443 | MANHOLES, TYPE A, 7'-DIAMETER, TYPE 11 FRAME AND GRATE | EACH | 2 | 2 | | | | | | | | |
| 60224446 | MANHOLES, TYPE A, 7'-DIAMETER, TYPE 1 FRAME, CLOSED LID | EACH | 2 | 2 | | | | | | | | |

* SPECIALTY ITEM

| CODE NO. | ITEM | UNIT | TOTAL QUANTITY | CONSTRUCTION CODE | | | | | | | | |
|---|---|---|---|---|---|---|---|---|---|---|---|---|
| | | | | FED / STATE 80% / 20% | FED / STATE 80% / 20% | FED / STATE 80% / 20% | FED / STATE 80% / 20% | FED / STATE 80% / 20% | FED / STATE 80% / 20% | FED / STATE 80% / 20% | 80% FEDERAL 10% STATE 10% CITY | 100% CITY |
| | | | | ROADWAY | BRIDGE | BRIDGE | RETAINING WALL | RETAINING WALL | RETAINING WALL | SAFETY | SAFETY | UTILITY |
| | | | | 0004 | 0010 | 0010 | 0044 | 0044 | 0044 | 0021 | 0021 | 0043 |
| | | | | URBAN | S.N. 090-0182 | S.N. 090-0183 | S.N. 090-8517 | S.N. 090-8520 | S.N. 090-8518 | URBAN | URBAN | URBAN |
| 60224457 | MANHOLES, TYPE A, 8'-DIAMETER, TYPE 1 FRAME, OPEN LID | EACH | 1 | 1 | | | | | | | | |
| 60224459 | MANHOLES, TYPE A, 8'-DIAMETER, TYPE 1 FRAME, CLOSED LID | EACH | 1 | 1 | | | | | | | | |
| 60224469 | MANHOLES, TYPE A, 9'-DIAMETER, TYPE 1 FRAME, CLOSED LID | EACH | 1 | 1 | | | | | | | | |
| 60224494 | MANHOLES, TYPE A, 10'-DIAMETER, TYPE 1 FRAME, OPEN LID | EACH | 1 | 1 | | | | | | | | |
| 60234200 | INLETS, TYPE A, TYPE 1 FRAME, OPEN LID | EACH | 3 | 3 | | | | | | | | |
| 60235300 | INLETS, TYPE A, TYPE 1 FRAME, CLOSED LID | EACH | 4 | 4 | | | | | | | | |
| 60236800 | INLETS, TYPE A, TYPE 11 FRAME AND GRATE | EACH | 2 | 2 | | | | | | | | |
| 60300305 | FRAMES AND LIDS TO BE ADJUSTED | EACH | 9 | 9 | | | | | | | | |
| 60300350 | MANHOLE FRAMES TO BE ADJUSTED | EACH | 19 | 5 | | | | | | | | 14 |
| 60300405 | VALVE BOX FRAMES TO BE ADJUSTED | EACH | 7 | 7 | | | | | | | | |
| 60500040 | REMOVING MANHOLES | EACH | 6 | 6 | | | | | | | | |
| 60500050 | REMOVING CATCH BASINS | EACH | 6 | 6 | | | | | | | | |
| 60500060 | REMOVING INLETS | EACH | 19 | 19 | | | | | | | | |
| 60600095 | CLASS SI CONCRETE (OUTLET) | CU YD | 50.5 | 50.5 | | | | | | | | |

* SPECIALTY ITEM

SOQ-12

| | | | | CONSTRUCTION CODE | | | | | | | | |
|---|---|---|---|---|---|---|---|---|---|---|---|---|
| | | | | FED / STATE 80% / 20% | FED / STATE 80% / 20% | FED / STATE 80% / 20% | FED / STATE 80% / 20% | FED / STATE 80% / 20% | FED / STATE 80% / 20% | FED / STATE 80% / 20% | 80% FEDERAL 10% STATE 10% CITY | 100% CITY |
| | | | | ROADWAY | BRIDGE | BRIDGE | RETAINING WALL | RETAINING WALL | RETAINING WALL | SAFETY | SAFETY | UTILITY |
| CODE NO. | ITEM | UNIT | TOTAL QUANTITY | 0004 | 0010 | 0010 | 0044 | 0044 | 0044 | 0021 | 0021 | 0043 |
| | | | | URBAN | S.N. 090-0182 | S.N. 090-0183 | S.N. 090-8517 | S.N. 090-8520 | S.N. 090-8518 | URBAN | URBAN | URBAN |
| 60600605 | CONCRETE CURB, TYPE B | FOOT | 214 | 214 | | | | | | | | |
| 60603800 | COMBINATION CONCRETE CURB AND GUTTER, TYPE B-6.12 | FOOT | 469 | 469 | | | | | | | | |
| 60605000 | COMBINATION CONCRETE CURB AND GUTTER, TYPE B-6.24 | FOOT | 5,131 | 5,131 | | | | | | | | |
| 60615400 | PAVED DITCH, TYPE A-15 | FOOT | 1,053 | 1,053 | | | | | | | | |
| 60618300 | CONCRETE MEDIAN SURFACE, 4 INCH | SQ FT | 2,230 | 2,230 | | | | | | | | |
| 60619200 | CONCRETE MEDIAN, TYPE SB-6.06 | SQ FT | 151 | 151 | | | | | | | | |
| 60619600 | CONCRETE MEDIAN, TYPE SB-6.12 | SQ FT | 7,000 | 7,000 | | | | | | | | |
| 60620000 | CONCRETE MEDIAN, TYPE SB-6.24 | SQ FT | 481 | 481 | | | | | | | | |
| 60622800 | CONCRETE MEDIAN, TYPE SM-6.12 | SQ FT | 5,898 | 5,898 | | | | | | | | |
| * 63000001 | STEEL PLATE BEAM GUARDRAIL, TYPE A, 6 FOOT POSTS | FOOT | 1,219 | 1,219 | | | | | | | | |
| * 63000003 | STEEL PLATE BEAM GUARDRAIL, TYPE A, 9 FOOT POSTS | FOOT | 1,477 | 1,477 | | | | | | | | |
| * 63100045 | TRAFFIC BARRIER TERMINAL, TYPE 2 | EACH | 3 | 3 | | | | | | | | |
| * 63100070 | TRAFFIC BARRIER TERMINAL, TYPE 5 | EACH | 2 | 2 | | | | | | | | |
| * 63100085 | TRAFFIC BARRIER TERMINAL, TYPE 6 | EACH | 6 | 6 | | | | | | | | |

* SPECIALTY ITEM

SOQ-13

| | CODE NO. | ITEM | UNIT | TOTAL QUANTITY | CONSTRUCTION CODE | | | | | | | | |
|---|---|---|---|---|---|---|---|---|---|---|---|---|---|
| | | | | | FED / STATE 80% / 20% | FED / STATE 80% / 20% | FED / STATE 80% / 20% | FED / STATE 80% / 20% | FED / STATE 80% / 20% | FED / STATE 80% / 20% | FED / STATE 80% / 20% | 80% FEDERAL 10% STATE 10% CITY | 100% CITY |
| | | | | | ROADWAY | BRIDGE | BRIDGE | RETAINING WALL | RETAINING WALL | RETAINING WALL | SAFETY | SAFETY | UTILITY |
| | | | | | 0004 | 0010 | 0010 | 0044 | 0044 | 0044 | 0021 | 0021 | 0043 |
| | | | | | URBAN | S.N. 090-0182 | S.N. 090-0183 | S.N. 090-8517 | S.N. 090-8520 | S.N. 090-8518 | URBAN | URBAN | URBAN |
| * | 63100167 | TRAFFIC BARRIER TERMINAL, TYPE 1 (SPECIAL) TANGENT | EACH | 3 | 3 | | | | | | | | |
| | 63200310 | GUARDRAIL REMOVAL | FOOT | 3,165 | 3,165 | | | | | | | | |
| | 64300260 | IMPACT ATTENUATORS (FULLY REDIRECTIVE, NARROW), TEST LEVEL 3 | EACH | 1 | 1 | | | | | | | | |
| | 64300920 | IMPACT ATTENUATORS (SEVERE USE, WIDE), TEST LEVEL 3 | EACH | 1 | 1 | | | | | | | | |
| | 66400505 | CHAIN LINK FENCE, 8' | FOOT | 459 | 459 | | | | | | | | |
| * | 66600105 | FURNISHING AND ERECTING RIGHT OF WAY MARKERS | EACH | 20 | 20 | | | | | | | | |
| * | 66700205 | PERMANENT SURVEY MARKERS, TYPE I | EACH | 12 | 12 | | | | | | | | |
| * | 66900200 | NON-SPECIAL WASTE DISPOSAL | CU YD | 14,740 | 14,740 | | | | | | | | |
| * | 66900530 | SOIL DISPOSAL ANALYSIS | EACH | 3 | 3 | | | | | | | | |
| * | 66901001 | REGULATED SUBSTANCES PRE-CONSTRUCTION PLAN | L SUM | 1 | 1 | | | | | | | | |
| * | 66901003 | REGULATED SUBSTANCES FINAL CONSTRUCTION REPORT | L SUM | 1 | 1 | | | | | | | | |
| * | 66901006 | REGULATED SUBSTANCES MONITORING | CAL DA | 260 | 260 | | | | | | | | |
| | 67000400 | ENGINEER'S FIELD OFFICE, TYPE A | CAL MO | 30 | 30 | | | | | | | | |
| | 67000600 | ENGINEER'S FIELD LABORATORY | CAL MO | 30 | 30 | | | | | | | | |

* SPECIALTY ITEM

SOQ-14

| | | | | | CONSTRUCTION CODE | | | | | | | | |
|---|---|---|---|---|---|---|---|---|---|---|---|---|---|
| | | | | | FED / STATE 80% / 20% | FED / STATE 80% / 20% | FED / STATE 80% / 20% | FED / STATE 80% / 20% | FED / STATE 80% / 20% | FED / STATE 80% / 20% | FED / STATE 80% / 20% | 80% FEDERAL 10% STATE 10% CITY | 100% CITY |
| | | | | | ROADWAY | BRIDGE | BRIDGE | RETAINING WALL | RETAINING WALL | RETAINING WALL | SAFETY | SAFETY | UTILITY |
| CODE NO. | ITEM | UNIT | TOTAL QUANTITY | | 0004 | 0010 | 0010 | 0044 | 0044 | 0044 | 0021 | 0021 | 0043 |
| | | | | | URBAN | S.N. 090-0182 | S.N. 090-0183 | S.N. 090-8517 | S.N. 090-8520 | S.N. 090-8518 | URBAN | URBAN | URBAN |
| 67100100 | MOBILIZATION | L SUM | 1 | | 1 | | | | | | | | |
| * 70103815 | TRAFFIC CONTROL SURVEILLANCE | CAL DA | 30 | | 30 | | | | | | | | |
| 70107025 | CHANGEABLE MESSAGE SIGN | CAL DA | 280 | | 280 | | | | | | | | |
| 70300150 | SHORT TERM PAVEMENT MARKING REMOVAL | SQ FT | 18,756 | | 18,756 | | | | | | | | |
| 70307120 | TEMPORARY PAVEMENT MARKING - LINE 4" - TYPE IV TAPE | FOOT | 78,148 | | 78,148 | | | | | | | | |
| 70307130 | TEMPORARY PAVEMENT MARKING - LINE 6" - TYPE IV TAPE | FOOT | 1,754 | | 1,754 | | | | | | | | |
| 70307160 | TEMPORARY PAVEMENT MARKING - LINE 12"- TYPE IV TAPE | FOOT | 206 | | 206 | | | | | | | | |
| 70307210 | TEMPORARY PAVEMENT MARKING - LINE 24"- TYPE IV TAPE | FOOT | 344 | | 344 | | | | | | | | |
| 70400100 | TEMPORARY CONCRETE BARRIER | FOOT | 1,250 | | 1,250 | | | | | | | | |
| 70400125 | PINNING TEMPORARY CONCRETE BARRIER | EACH | 522 | | 522 | | | | | | | | |
| 70400200 | RELOCATE TEMPORARY CONCRETE BARRIER | FOOT | 5,137.5 | | 5,137.5 | | | | | | | | |
| 70600260 | IMPACT ATTENUATORS, TEMPORARY (FULLY REDIRECTIVE, NARROW), TEST LEVEL 3 | EACH | 4 | | 4 | | | | | | | | |
| 70600332 | IMPACT ATTENUATORS, RELOCATE (FULLY REDIRECTIVE, NARROW), TEST LEVEL 3 | EACH | 17 | | 17 | | | | | | | | |
| * 72000100 | SIGN PANEL - TYPE 1 | SQ FT | 506 | | 506 | | | | | | | | |

* SPECIALTY ITEM

SOQ-15

Michael Baker INTERNATIONAL
200 W Adams Street
Suite 1800
Chicago, IL 60606
P:+1 312.707.8770
FAX: 312.707.8804

| | | | |
|---|---|---|---|
| USER NAME = Winson.Teng | DESIGNED - JAL | REVISED - | |
| | DRAWN - DCL | REVISED - | |
| PLOT SCALE = 200.0000 ' / in. | CHECKED - RBB | REVISED - | |
| PLOT DATE = 5/6/2025 | DATE - 4/08/2025 | REVISED - | |

**STATE OF ILLINOIS**
**DEPARTMENT OF TRANSPORTATION**

**CEDAR ST. (IL-8/IL-116) OVER TZPR & IL-29**
**SUMMARY OF QUANTITIES**

SCALE: NO SCALE | SHEET 15 OF 26 SHEETS | STA. TO STA.

| F.A.P. RTE. | SECTION | COUNTY | TOTAL SHEETS | SHEET NO. |
|---|---|---|---|---|
| VAR. | 13 (HVB, HB-3) 8R-1:R | TAZEWELL | 1173 | 22 |
| | | CONTRACT NO. 68C55 | | |
| | ILLINOIS | FED. AID PROJECT | | |

MODEL: Default
FILE NAME: pw:\\mba-us-pw.bentley.com:mba-us-pw-03\Documents\Chicago IL\01 Projects\179740 IDOT Cedar\SHEET PLTS\0 CADD\CAD Sheets\D468C55-sht-SOQ15.dgn

REV. 7/1/25

| | CODE NO. | ITEM | UNIT | TOTAL QUANTITY | CONSTRUCTION CODE | | | | | | | | |
|---|---|---|---|---|---|---|---|---|---|---|---|---|---|
| | | | | | FED / STATE 80% / 20% | FED / STATE 80% / 20% | FED / STATE 80% / 20% | FED / STATE 80% / 20% | FED / STATE 80% / 20% | FED / STATE 80% / 20% | FED / STATE 80% / 20% | 80% FEDERAL 10% STATE 10% CITY | 100% CITY |
| | | | | | ROADWAY | BRIDGE | BRIDGE | RETAINING WALL | RETAINING WALL | RETAINING WALL | SAFETY | SAFETY | UTILITY |
| | | | | | 0004 | 0010 | 0010 | 0044 | 0044 | 0044 | 0021 | 0021 | 0043 |
| | | | | | URBAN | S.N. 090-0182 | S.N. 090-0183 | S.N. 090-8517 | S.N. 090-8520 | S.N. 090-8518 | URBAN | URBAN | URBAN |
| * | 72000200 | SIGN PANEL - TYPE 2 | SQ FT | 24 | 24 | | | | | | | | |
| * | 72400310 | REMOVE SIGN PANEL - TYPE 1 | SQ FT | 267 | 267 | | | | | | | | |
| * | 72400320 | REMOVE SIGN PANEL - TYPE 2 | SQ FT | 51 | 51 | | | | | | | | |
| * | 72400710 | RELOCATE SIGN PANEL - TYPE 1 | SQ FT | 8 | 8 | | | | | | | | |
| * | 72501000 | TERMINAL MARKER - DIRECT APPLIED | EACH | 3 | 3 | | | | | | | | |
| * | 72800100 | TELESCOPING STEEL SIGN SUPPORT | FOOT | 251 | 251 | | | | | | | | |
| * | 73000100 | WOOD SIGN SUPPORT | FOOT | 131 | 131 | | | | | | | | |
| * | 78008300 | POLYUREA PAVEMENT MARKING TYPE II - LETTERS AND SYMBOLS | SQ FT | 530 | 530 | | | | | | | | |
| * | 78008330 | POLYUREA PAVEMENT MARKING TYPE II - LINE 6" | FOOT | 33,201 | 33,201 | | | | | | | | |
| * | 78008340 | POLYUREA PAVEMENT MARKING TYPE II - LINE 8" | FOOT | 6,973 | 6,973 | | | | | | | | |
| * | 78008350 | POLYUREA PAVEMENT MARKING TYPE II - LINE 12" | FOOT | 1,433 | 1,433 | | | | | | | | |
| * | 78008370 | POLYUREA PAVEMENT MARKING TYPE II - LINE 24" | FOOT | 214 | 214 | | | | | | | | |
| * | 78011000 | GROOVING FOR RECESSED PAVEMENT MARKING, LETTERS AND SYMBOLS | SQ FT | 571 | 571 | | | | | | | | |
| * | 78011035 | GROOVING FOR RECESSED PAVEMENT MARKING 7" | FOOT | 33,201 | 33,201 | | | | | | | | |

* SPECIALTY ITEM

SOQ-16

| | CODE NO. | ITEM | UNIT | TOTAL QUANTITY | CONSTRUCTION CODE | | | | | | | | |
|---|---|---|---|---|---|---|---|---|---|---|---|---|---|
| | | | | | FED / STATE 80% / 20% | FED / STATE 80% / 20% | FED / STATE 80% / 20% | FED / STATE 80% / 20% | FED / STATE 80% / 20% | FED / STATE 80% / 20% | FED / STATE 80% / 20% | 80% FEDERAL 10% STATE 10% CITY | 100% CITY |
| | | | | | ROADWAY | BRIDGE | BRIDGE | RETAINING WALL | RETAINING WALL | RETAINING WALL | SAFETY | SAFETY | UTILITY |
| | | | | | 0004 | 0010 | 0010 | 0044 | 0044 | 0044 | 0021 | 0021 | 0043 |
| | | | | | URBAN | S.N. 090-0182 | S.N. 090-0183 | S.N. 090-8517 | S.N. 090-8520 | S.N. 090-8518 | URBAN | URBAN | URBAN |
| * | 78011045 | GROOVING FOR RECESSED PAVEMENT MARKING 9" | FOOT | 6,973 | 6,973 | | | | | | | | |
| * | 78011065 | GROOVING FOR RECESSED PAVEMENT MARKING 13" | FOOT | 1,433 | 1,433 | | | | | | | | |
| * | 78011125 | GROOVING FOR RECESSED PAVEMENT MARKING 25" | FOOT | 214 | 214 | | | | | | | | |
| * | 78100100 | RAISED REFLECTIVE PAVEMENT MARKER | EACH | 238 | 238 | | | | | | | | |
| * | 78200005 | GUARDRAIL REFLECTORS, TYPE A | EACH | 39 | 39 | | | | | | | | |
| * | 78200011 | BARRIER WALL REFLECTORS, TYPE C | EACH | 53 | 53 | | | | | | | | |
| | 78300202 | PAVEMENT MARKING REMOVAL - WATER BLASTING | SQ FT | 9,129 | 9,129 | | | | | | | | |
| * | 80400100 | ELECTRIC SERVICE INSTALLATION | EACH | 1 | | | | | | | 1 | | |
| * | 81028320 | UNDERGROUND CONDUIT, PVC, 1" DIA. | FOOT | 1,658 | | | | | | | 1,658 | | |
| * | 81028350 | UNDERGROUND CONDUIT, PVC, 2" DIA. | FOOT | 2,989 | | | | | | | 2,989 | | |
| * | 81028370 | UNDERGROUND CONDUIT, PVC, 3" DIA. | FOOT | 1,534 | | | | | | | 1,273 | 261 | |
| * | 81100600 | CONDUIT ATTACHED TO STRUCTURE, 2" DIA., GALVANIZED STEEL | FOOT | 480 | | | | | | | 480 | | |
| * | 81104580 | CONDUIT ATTACHED TO STRUCTURE, 2" DIA., STAINLESS STEEL | FOOT | 90 | | | | | | | 90 | | |
| * | 81200210 | CONDUIT EMBEDDED IN STRUCTURE, 1" DIA., PVC | FOOT | 40 | | | | | | | 40 | | |

* SPECIALTY ITEM

| | CODE NO. | ITEM | UNIT | TOTAL QUANTITY | CONSTRUCTION CODE | | | | | | | | |
|---|---|---|---|---|---|---|---|---|---|---|---|---|---|
| | | | | | FED / STATE 80% / 20% | FED / STATE 80% / 20% | FED / STATE 80% / 20% | FED / STATE 80% / 20% | FED / STATE 80% / 20% | FED / STATE 80% / 20% | FED / STATE 80% / 20% | 80% FEDERAL 10% STATE 10% CITY | 100% CITY |
| | | | | | ROADWAY | BRIDGE | BRIDGE | RETAINING WALL | RETAINING WALL | RETAINING WALL | SAFETY | SAFETY | UTILITY |
| | | | | | 0004 | 0010 | 0010 | 0044 | 0044 | 0044 | 0021 | 0021 | 0043 |
| | | | | | URBAN | S.N. 090-0182 | S.N. 090-0183 | S.N. 090-8517 | S.N. 090-8520 | S.N. 090-8518 | URBAN | URBAN | URBAN |
| * | 81200230 | CONDUIT EMBEDDED IN STRUCTURE, 2" DIA., PVC | FOOT | 2,420 | | | | | | | 2,420 | | |
| * | 81300320 | JUNCTION BOX, STAINLESS STEEL, ATTACHED TO STRUCTURE, 8" X 8" X 6" | EACH | 1 | | | | | | | 1 | | |
| * | 81300550 | JUNCTION BOX, STAINLESS STEEL, ATTACHED TO STRUCTURE, 12" X 12" X 6" | EACH | 9 | | | | | | | 9 | | |
| * | 81300810 | JUNCTION BOX, STAINLESS STEEL, ATTACHED TO STRUCTURE, 18" X 12" X 8" | EACH | 2 | | | | | | | 2 | | |
| * | 81400700 | HANDHOLE, PORTLAND CEMENT CONCRETE | EACH | 3 | | | | | | | 3 | | |
| * | 81603040 | UNIT DUCT, 600V, 2-1C NO.6, 1/C NO.8 GROUND, (XLP-TYPE USE), 1" DIA. POLYETHYLENE | FOOT | 15,435 | | | | | | | 15,435 | | |
| * | 81702120 | ELECTRIC CABLE IN CONDUIT, 600V (XLP-TYPE USE) 1/C NO. 8 | FOOT | 3,112 | | | | | | | 3,112 | | |
| * | 81702130 | ELECTRIC CABLE IN CONDUIT, 600V (XLP-TYPE USE) 1/C NO. 6 | FOOT | 9,006 | | | | | | | 9,006 | | |
| * | 81800190 | AERIAL CABLE, 2-1/C NO. 2 WITH MESSENGER WIRE | FOOT | 1,905 | | | | | | | 1,905 | | |
| * | 82110007 | LUMINAIRE, LED, ROADWAY, OUTPUT DESIGNATION G | EACH | 95 | | | | | | | 95 | | |
| * | 82110018 | LUMINAIRE, LED, HIGHMAST, OUTPUT DESIGNATION K | EACH | 16 | | | | | | | 16 | | |
| * | 82500310 | LIGHTING CONTROLLER, POLE MOUNTED, 240VOLT, 60AMP | EACH | 1 | | | | | | | 1 | | |
| * | 82500350 | LIGHTING CONTROLLER, BASE MOUNTED, 240VOLT, 100AMP | EACH | 2 | | | | | | | 2 | | |
| * | 83001400 | LIGHT POLE, ALUMINUM, 35 FT. M.H., 10 FT. DAVIT ARM | EACH | 6 | | | | | | | 6 | | |

* SPECIALTY ITEM

SOQ-18

| | CODE NO. | ITEM | UNIT | TOTAL QUANTITY | CONSTRUCTION CODE | | | | | | | | |
|---|---|---|---|---|---|---|---|---|---|---|---|---|---|
| | | | | | FED / STATE 80% / 20% | FED / STATE 80% / 20% | FED / STATE 80% / 20% | FED / STATE 80% / 20% | FED / STATE 80% / 20% | FED / STATE 80% / 20% | FED / STATE 80% / 20% | 80% FEDERAL 10% STATE 10% CITY | 100% CITY |
| | | | | | ROADWAY | BRIDGE | BRIDGE | RETAINING WALL | RETAINING WALL | RETAINING WALL | SAFETY | SAFETY | UTILITY |
| | | | | | 0004 | 0010 | 0010 | 0044 | 0044 | 0044 | 0021 | 0021 | 0043 |
| | | | | | URBAN | S.N. 090-0182 | S.N. 090-0183 | S.N. 090-8517 | S.N. 090-8520 | S.N. 090-8518 | URBAN | URBAN | URBAN |
| * | 83002400 | LIGHT POLE, ALUMINUM, 40 FT. M.H., 10 FT. DAVIT ARM | EACH | 15 | | | | | | | 15 | | |
| * | 83003400 | LIGHT POLE, ALUMINUM, 45 FT. M.H., 10 FT. DAVIT ARM | EACH | 74 | | | | | | | 74 | | |
| * | 83057405 | LIGHT POLE, WOOD, 70 FOOT, CLASS 3, WITH 15FT MAST ARM | EACH | 16 | | | | | | | 16 | | |
| * | 83600352 | LIGHT POLE FOUNDATION, METAL, 11 1/2" BOLT CIRCLE, 8 5/8" X 6' | EACH | 6 | | | | | | | 6 | | |
| * | 83600356 | LIGHT POLE FOUNDATION, METAL, 15" BOLT CIRCLE, 8 5/8" X 6' | EACH | 74 | | | | | | | 74 | | |
| * | 83800506 | BREAKAWAY DEVICE, COUPLING WITH ALUMINUM SKIRT OVER STAINLESS STEEL SCREEN | EACH | 112 | | | | | | | 112 | | |
| * | 84100110 | REMOVAL OF TEMPORARY LIGHTING UNIT | EACH | 16 | | | | | | | 16 | | |
| * | 84200600 | REMOVAL OF LIGHTING UNIT, NO SALVAGE | EACH | 76 | | | | | | | 76 | | |
| * | 84200804 | REMOVAL OF POLE FOUNDATION | EACH | 61 | | | | | | | 61 | | |
| * | 84500110 | REMOVAL OF LIGHTING CONTROLLER | EACH | 2 | | | | | | | 2 | | |
| * | 84500120 | REMOVAL OF ELECTRIC SERVICE INSTALLATION | EACH | 2 | | | | | | | 2 | | |
| | 84500130 | REMOVAL OF LIGHTING CONTROLLER FOUNDATION | EACH | 1 | | | | | | | 1 | | |
| * | 85820400 | FLASHER CONTROLLER, SPECIAL, WITHOUT CABINET | EACH | 1 | | | | | | | 1 | | |
| * | 87301225 | ELECTRIC CABLE IN CONDUIT, SIGNAL NO. 14 3C | FOOT | 1,491 | | | | | | | 1,491 | | |

* SPECIALTY ITEM

| | CODE NO. | ITEM | UNIT | TOTAL QUANTITY | CONSTRUCTION CODE | | | | | | | | |
|---|---|---|---|---|---|---|---|---|---|---|---|---|---|
| | | | | | FED / STATE 80% / 20% | FED / STATE 80% / 20% | FED / STATE 80% / 20% | FED / STATE 80% / 20% | FED / STATE 80% / 20% | FED / STATE 80% / 20% | FED / STATE 80% / 20% | 80% FEDERAL 10% STATE 10% CITY | 100% CITY |
| | | | | | ROADWAY | BRIDGE | BRIDGE | RETAINING WALL | RETAINING WALL | RETAINING WALL | SAFETY | SAFETY | UTILITY |
| | | | | | 0004 | 0010 | 0010 | 0044 | 0044 | 0044 | 0021 | 0021 | 0043 |
| | | | | | URBAN | S.N. 090-0182 | S.N. 090-0183 | S.N. 090-8517 | S.N. 090-8520 | S.N. 090-8518 | URBAN | URBAN | URBAN |
| * | 87900100 | DRILL EXISTING FOUNDATION | EACH | 2 | | | | | | | | 2 | |
| * | 87900200 | DRILL EXISTING HANDHOLE | EACH | 6 | | | | | | | | 6 | |
| * | A2007016 | TREE, QUERCUS ROBUR FASTIGIATA (FASTIGIATE ENGLISH OAK), 2" CALIPER, BALLED AND BURLAPPED | EACH | 17 | 17 | | | | | | | | |
| * | B20018G5 | TREE, SYRINGA RETICULATA (JAPANESE TREE LILAC), CONTAINER GROWN, 5-GALLON | EACH | 7 | 7 | | | | | | | | |
| * | D2001789 | EVERGREEN, PICEA ABIES (NORWAY SPRUCE), 10' HEIGHT, BALLED AND BURLAPPED | EACH | 7 | 7 | | | | | | | | |
| * | X0320023 | CLOSED CIRCUIT TELEVISION DOME CAMERA, HD | EACH | 2 | | | | | | | 2 | | |
| * | X0324597 | CLOSED CIRCUIT TELEVISION CABINET | EACH | 2 | | | | | | | 2 | | |
| * | X0325482 | REMOVE EXISTING ITS EQUIPMENT | EACH | 1 | | | | | | | 1 | | |
| * | X0325810 | WIRELESS ETHERNET RADIO | EACH | 2 | | | | | | | 2 | | |
| * | X0326812 | CAT 5 ETHERNET CABLE | FOOT | 688 | | | | | | | 688 | | |
| * | X0327739 | MISCELLANEOUS ELECTRICAL WORK | L SUM | 1 | | | | | | | 1 | | |
| | X0327999 | ANTI-GRAFFITI COATING | SQ FT | 34,408 | | | | 20,086 | 14,322 | | | | |
| | X1200160 | CONNECTION TO EXISTING DRAINAGE STRUCTURE | EACH | 1 | 1 | | | | | | | | |
| * | X1400127 | CAT. 6 ETHERNET CABLE | FOOT | 80 | | | | | | | 80 | | |

* SPECIALTY ITEM

| | CODE NO. | ITEM | UNIT | TOTAL QUANTITY | CONSTRUCTION CODE | | | | | | | | |
|---|---|---|---|---|---|---|---|---|---|---|---|---|---|
| | | | | | FED / STATE 80% / 20% | FED / STATE 80% / 20% | FED / STATE 80% / 20% | FED / STATE 80% / 20% | FED / STATE 80% / 20% | FED / STATE 80% / 20% | FED / STATE 80% / 20% | 80% FEDERAL 10% STATE 10% CITY | 100% CITY |
| | | | | | ROADWAY | BRIDGE | BRIDGE | RETAINING WALL | RETAINING WALL | RETAINING WALL | SAFETY | SAFETY | UTILITY |
| | | | | | 0004 | 0010 | 0010 | 0044 | 0044 | 0044 | 0021 | 0021 | 0043 |
| | | | | | URBAN | S.N. 090-0182 | S.N. 090-0183 | S.N. 090-8517 | S.N. 090-8520 | S.N. 090-8518 | URBAN | URBAN | URBAN |
| * | X1400427 | FLASHING BEACON ASSEMBLY | EACH | 1 | | | | | | | 1 | | |
| | X2511630 | EROSION CONTROL BLANKET (SPECIAL) | SQ YD | 36,978 | 36,978 | | | | | | | | |
| * | X2600011 | REMOVE AND RELOCATE SIGN PANEL | EACH | 3 | 3 | | | | | | | | |
| | X4240420 | PORTLAND CEMENT CONCRETE SIDEWALK 4 INCH (SPECIAL) | SQ FT | 1,281 | 1,281 | | | | | | | | |
| | X4400110 | TEMPORARY PAVEMENT REMOVAL | SQ YD | 3,066 | 3,066 | | | | | | | | |
| | X5030250 | BRIDGE DECK GROOVING (LONGITUDINAL) | SQ YD | 6,342 | | 5,242 | 1,100 | | | | | | |
| | X5030283 | FORM LINER LIMESTONE SURFACE | SQ FT | 9,498 | | | | | 9,498 | | | | |
| | X5211120 | HIGH LOAD MULTI-ROTATIONAL BEARINGS, POT, FIXED-400K | EACH | 8 | | | 8 | | | | | | |
| | X5211125 | HIGH LOAD MULTI-ROTATIONAL BEARINGS, POT, FIXED-500K | EACH | 4 | | 4 | | | | | | | |
| | X5211135 | HIGH LOAD MULTI-ROTATIONAL BEARINGS, POT, FIXED-700K | EACH | 12 | | 12 | | | | | | | |
| | X5211145 | HIGH LOAD MULTI-ROTATIONAL BEARINGS, POT, FIXED-900K | EACH | 4 | | 4 | | | | | | | |
| | X5211220 | HIGH LOAD MULTI-ROTATIONAL BEARINGS, POT, NON-GUIDED EXPANSION-400K | EACH | 1 | | 1 | | | | | | | |
| | X5211305 | HIGH LOAD MULTI-ROTATIONAL BEARINGS, POT, GUIDED EXPANSION-100K | EACH | 8 | | | 8 | | | | | | |
| | X5211310 | HIGH LOAD MULTI-ROTATIONAL BEARINGS, POT, GUIDED EXPANSION-200K | EACH | 8 | | | 8 | | | | | | |

* SPECIALTY ITEM

| CODE NO. | ITEM | UNIT | TOTAL QUANTITY | CONSTRUCTION CODE | | | | | | | | |
|---|---|---|---|---|---|---|---|---|---|---|---|---|
| | | | | FED / STATE 80% / 20% | FED / STATE 80% / 20% | FED / STATE 80% / 20% | FED / STATE 80% / 20% | FED / STATE 80% / 20% | FED / STATE 80% / 20% | FED / STATE 80% / 20% | 80% FEDERAL 10% STATE 10% CITY | 100% CITY |
| | | | | ROADWAY | BRIDGE | BRIDGE | RETAINING WALL | RETAINING WALL | RETAINING WALL | SAFETY | SAFETY | UTILITY |
| | | | | 0004 | 0010 | 0010 | 0044 | 0044 | 0044 | 0021 | 0021 | 0043 |
| | | | | URBAN | S.N. 090-0182 | S.N. 090-0183 | S.N. 090-8517 | S.N. 090-8520 | S.N. 090-8518 | URBAN | URBAN | URBAN |
| X5211315 | HIGH LOAD MULTI-ROTATIONAL BEARINGS, POT, GUIDED EXPANSION-300K | EACH | 20 | | 12 | 8 | | | | | | |
| X5211320 | HIGH LOAD MULTI-ROTATIONAL BEARINGS, POT, GUIDED EXPANSION-400K | EACH | 3 | | 3 | | | | | | | |
| X5211330 | HIGH LOAD MULTI-ROTATIONAL BEARINGS, POT, GUIDED EXPANSION-600K | EACH | 12 | | 12 | | | | | | | |
| X5211335 | HIGH LOAD MULTI-ROTATIONAL BEARINGS, POT, GUIDED EXPANSION-700K | EACH | 15 | | 15 | | | | | | | |
| X5220102 | RETAINING WALL REMOVAL | FOOT | 757 | 757 | | | | | | | | |
| X5230174 | DRAINAGE SCUPPERS, DS-11 | EACH | 31 | | 25 | 6 | | | | | | |
| X5427602 | REMOVE EXISTING FLARED END SECTION | EACH | 7 | 7 | | | | | | | | |
| X5509910 | ABANDON AND FILL EXISTING SANITARY MANHOLE | EACH | 3 | 3 | | | | | | | | |
| X6020065 | INLETS, TYPE G-1, DOUBLE (SPECIAL) | EACH | 1 | 1 | | | | | | | | |
| X6020080 | INLETS, TYPE G-1, DOUBLE | EACH | 3 | 3 | | | | | | | | |
| X6020082 | INLETS, TYPE G-1 | EACH | 11 | 11 | | | | | | | | |
| X6021065 | INLETS, TYPE G-1 (SPECIAL) | EACH | 6 | 6 | | | | | | | | |
| X6021815 | INLET-MANHOLE, TYPE G-1, 5' DIAMETER | EACH | 8 | 8 | | | | | | | | |
| X6021816 | INLET-MANHOLE, TYPE G-1, 6' DIAMETER | EACH | 1 | 1 | | | | | | | | |

* SPECIALTY ITEM

| CODE NO. | ITEM | UNIT | TOTAL QUANTITY | CONSTRUCTION CODE | | | | | | | | |
|---|---|---|---|---|---|---|---|---|---|---|---|---|
| | | | | FED / STATE 80% / 20% | FED / STATE 80% / 20% | FED / STATE 80% / 20% | FED / STATE 80% / 20% | FED / STATE 80% / 20% | FED / STATE 80% / 20% | FED / STATE 80% / 20% | 80% FEDERAL 10% STATE 10% CITY | 100% CITY |
| | | | | ROADWAY | BRIDGE | BRIDGE | RETAINING WALL | RETAINING WALL | RETAINING WALL | SAFETY | SAFETY | UTILITY |
| | | | | 0004 | 0010 | 0010 | 0044 | 0044 | 0044 | 0021 | 0021 | 0043 |
| | | | | URBAN | S.N. 090-0182 | S.N. 090-0183 | S.N. 090-8517 | S.N. 090-8520 | S.N. 090-8518 | URBAN | URBAN | URBAN |
| X6021818 | INLET-MANHOLE, TYPE G-1, 8' DIAMETER | EACH | 1 | 1 | | | | | | | | |
| X6024242 | INLETS, SPECIAL, NO. 1 | EACH | 6 | 6 | | | | | | | | |
| X6024244 | INLETS, SPECIAL, NO. 2 | EACH | 1 | 1 | | | | | | | | |
| X6024246 | INLETS, SPECIAL, NO. 3 | EACH | 11 | 11 | | | | | | | | |
| X6025604 | PROPOSED MANHOLE/CATCH BASIN CONNECTION OVER EXISTING STORM SEWER | EACH | 7 | 7 | | | | | | | | |
| X6026051 | SANITARY MANHOLES TO BE RECONSTRUCTED | EACH | 6 | 5 | | | | | | | | 1 |
| X6026053 | SANITARY MANHOLE FRAME AND COVER | EACH | 7 | 7 | | | | | | | | |
| X6026055 | SANITARY MANHOLE (SPECIAL) | EACH | 4 | 4 | | | | | | | | |
| X6026059 | SANITARY MANHOLES, SADDLE - TYPE, 5' DIAMETER | EACH | 1 | 1 | | | | | | | | |
| X6060101 | CLASS SI CONCRETE PIPE UNDER DRAIN OUTLET | CU YD | 7 | 7 | | | | | | | | |
| X6062700 | CONCRETE GUTTER, TYPE A (SPECIAL) | FOOT | 2,280 | 2,280 | | | | | | | | |
| X6350120 | DELINEATOR REMOVAL | EACH | 5 | 5 | | | | | | | | |
| X6640104 | FENCE REMOVAL | FOOT | 656 | 656 | | | | | | | | |
| X6640535 | CHAIN LINK FENCE, 6' ATTACHED TO STRUCTURE | FOOT | 2,574 | | | | 1,350 | 1,224 | | | | |

* SPECIALTY ITEM

| | CODE NO. | ITEM | UNIT | TOTAL QUANTITY | CONSTRUCTION CODE | | | | | | | | |
|---|---|---|---|---|---|---|---|---|---|---|---|---|---|
| | | | | | FED / STATE 80% / 20% | FED / STATE 80% / 20% | FED / STATE 80% / 20% | FED / STATE 80% / 20% | FED / STATE 80% / 20% | FED / STATE 80% / 20% | FED / STATE 80% / 20% | 80% FEDERAL 10% STATE 10% CITY | 100% CITY |
| | | | | | ROADWAY | BRIDGE | BRIDGE | RETAINING WALL | RETAINING WALL | RETAINING WALL | SAFETY | SAFETY | UTILITY |
| | | | | | 0004 | 0010 | 0010 | 0044 | 0044 | 0044 | 0021 | 0021 | 0043 |
| | | | | | URBAN | S.N. 090-0182 | S.N. 090-0183 | S.N. 090-8517 | S.N. 090-8520 | S.N. 090-8518 | URBAN | URBAN | URBAN |
| * | X7010216 | TRAFFIC CONTROL AND PROTECTION, (SPECIAL) | L SUM | 1 | 1 | | | | | | | | |
| * | X8040102 | ELECTRIC SERVICE INSTALLATION (SPECIAL) | EACH | 2 | | | | | | | 2 | | |
| | X8140117 | HANDHOLE TO BE ADJUSTED WITH NEW FRAME AND COVER | EACH | 3 | | | | | | | | 3 | |
| * | X8420111 | REMOVAL OF UNDERPASS LIGHTING UNIT, NO SALVAGE | EACH | 12 | | | | | | | 12 | | |
| * | X8710030 | FIBER OPTIC CABLE 48 FIBERS, SINGLE MODE | FOOT | 3,767 | | | | | | | 3,767 | | |
| * | X8710036 | FIBER OPTIC CABLE 12 FIBERS, SINGLE MODE | FOOT | 1,052 | | | | | | | 1,052 | | |
| * | X8710049 | POWER OVER ETHERNET EXTENDER | EACH | 1 | | | | | | | | 1 | |
| * | X8710050 | FIBER OPTIC ETHERNET DROP AND REPEAT SWITCH | EACH | 2 | | | | | | | 2 | | |
| * | X8891202 | WIDE AREA VIDEO VEHICLE DETECTION SYSTEM COMPLETE | EACH | 1 | | | | | | | | 1 | |
| | Z0001002 | GUARDRAIL AGGREGATE EROSION CONTROL | TON | 555 | 555 | | | | | | | | |
| | Z0004552 | APPROACH SLAB REMOVAL | SQ YD | 571 | 571 | | | | | | | | |
| | Z0007120 | WELDED WIRE FABRIC 6X6 | SQ YD | 30 | 30 | | | | | | | | |
| * | Z0007601 | BUILDING REMOVAL NO. 1 | L SUM | 1 | 1 | | | | | | | | |
| | Z0013798 | CONSTRUCTION LAYOUT | L SUM | 1 | 1 | | | | | | | | |

* SPECIALTY ITEM

| | | | | CONSTRUCTION CODE | | | | | | | | |
|---|---|---|---|---|---|---|---|---|---|---|---|---|
| | | | | FED / STATE 80% / 20% | FED / STATE 80% / 20% | FED / STATE 80% / 20% | FED / STATE 80% / 20% | FED / STATE 80% / 20% | FED / STATE 80% / 20% | FED / STATE 80% / 20% | 80% FEDERAL 10% STATE 10% CITY | 100% CITY |
| | | | | ROADWAY | BRIDGE | BRIDGE | RETAINING WALL | RETAINING WALL | RETAINING WALL | SAFETY | SAFETY | UTILITY |
| CODE NO. | ITEM | UNIT | TOTAL QUANTITY | 0004 URBAN | 0010 S.N. 090-0182 | 0010 S.N. 090-0183 | 0044 S.N. 090-8517 | 0044 S.N. 090-8520 | 0044 S.N. 090-8518 | 0021 URBAN | 0021 URBAN | 0043 URBAN |
| Z0018100 | DRAINAGE STRUCTURE ADJUSTMENT (SPECIAL) | EACH | 5 | 5 | | | | | | | | |
| Z0029090 | DIAMOND GRINDING (BRIDGE SECTION) | SQ YD | 10,625 | | 9,181 | 1,444 | | | | | | |
| * Z0033052 | COMMUNICATIONS VAULT | EACH | 3 | | | | | | | 3 | | |
| Z0034390 | MODULAR EXPANSION JOINT 6" | FOOT | 205 | | 205 | | | | | | | |
| Z0048665 | RAILROAD PROTECTIVE LIABILITY INSURANCE | L SUM | 1 | 1 | | | | | | | | |
| Z0056657 | STORM SEWERS, TYPE 1, WATER MAIN QUALITY PIPE, 36" | FOOT | 77 | 77 | | | | | | | | |
| Z0056668 | STORM SEWERS, TYPE 2, WATER MAIN QUALITY PIPE, 12" | FOOT | 44 | 44 | | | | | | | | |
| Z0056670 | STORM SEWERS, TYPE 2, WATER MAIN QUALITY PIPE, 18" | FOOT | 33 | 33 | | | | | | | | |
| Z0056672 | STORM SEWERS, TYPE 2, WATER MAIN QUALITY PIPE, 24" | FOOT | 173 | 173 | | | | | | | | |
| Z0057000 | SANITARY SEWER 10" | FOOT | 427 | 427 | | | | | | | | |
| Z0061980 | CARRIER SANITARY SEWER, 10" DIAMETER | FOOT | 11 | 11 | | | | | | | | |
| Z0061990 | SANITARY SEWER STAGING AND BY-PASS FLOW SYSTEM | LSUM | 1 | 1 | | | | | | | | |
| Z0062456 | TEMPORARY PAVEMENT | SQ YD | 2,003 | 2,003 | | | | | | | | |
| Z0067900 | STEEL CASINGS 24" | FOOT | 11 | 11 | | | | | | | | |

* SPECIALTY ITEM

SOQ-25

| | CODE NO. | ITEM | UNIT | TOTAL QUANTITY | CONSTRUCTION CODE | | | | | | | | |
|---|---|---|---|---|---|---|---|---|---|---|---|---|---|
| | | | | | FED / STATE 80% / 20% | FED / STATE 80% / 20% | FED / STATE 80% / 20% | FED / STATE 80% / 20% | FED / STATE 80% / 20% | FED / STATE 80% / 20% | FED / STATE 80% / 20% | 80% FEDERAL 10% STATE 10% CITY | 100% CITY |
| | | | | | ROADWAY | BRIDGE | BRIDGE | RETAINING WALL | RETAINING WALL | RETAINING WALL | SAFETY | SAFETY | UTILITY |
| | | | | | 0004 | 0010 | 0010 | 0044 | 0044 | 0044 | 0021 | 0021 | 0043 |
| | | | | | URBAN | S.N. 090-0182 | S.N. 090-0183 | S.N. 090-8517 | S.N. 090-8520 | S.N. 090-8518 | URBAN | URBAN | URBAN |
| Ø | Z0076600 | TRAINEES | HOUR | 10,000 | 10,000 | | | | | | | | |
| Ø | Z0076604 | TRAINEES TRAINING PROGRAM GRADUATE | HOUR | 10,000 | 10,000 | | | | | | | | |
| | Z0076870 | UNDERDRAIN CONNECTION TO STRUCTURE | EACH | 4 | 4 | | | | | | | | |

* SPECIALTY ITEM

Ø 0042

SOO-26

MODEL: Default
FILE NAME: pw:\\mb-us-sw.bentley.com:mb-us-pw-03\Documents\Chicago IL\01 Projects\179740 IDOT Cedar\SIE+ Phll5.0 CADD\CAD Sheets\D468C55-sht-SOO26.dgn

Michael Baker INTERNATIONAL
200 W Adams Street
Suite 1800
Chicago, IL 60606
P:+1 312.707.8770
FAX: 312.707.8804

| | | |
|---|---|---|
| USER NAME = Winson.Teng | DESIGNED - JAL | REVISED - |
| | DRAWN - DCL | REVISED - |
| PLOT SCALE = 200.0000 ' / in. | CHECKED - RBB | REVISED - |
| PLOT DATE = 5/6/2025 | DATE - 4/08/2025 | REVISED - |

**STATE OF ILLINOIS**
**DEPARTMENT OF TRANSPORTATION**

**CEDAR ST. (IL-8/IL-116) OVER TZPR & IL-29**
**SUMMARY OF QUANTITIES**

SCALE: NO SCALE | SHEET 26 OF 26 SHEETS | STA. TO STA.

| F.A.P. RTE. | SECTION | COUNTY | TOTAL SHEETS | SHEET NO. |
|---|---|---|---|---|
| VAR. | 13 (HVB, HB-3) 8R-1:R | TAZEWELL | 1173 | 33 |
| | | CONTRACT NO. 68C55 | | |
| | ILLINOIS | FED. AID PROJECT | | |

REV. 6/30/25 REV. 6/3/25

## EXISTING TYPICAL SECTION LEGEND

- (A) PCC PAVEMENT VAR. 0.0"-5.0"±
- (B) PCC PAVEMENT VAR. 5.0"-9.0"±
- (C) CRUSHED GRAVEL VAR. 4.0"-7.0"±
- (D) HMA PAVEMENT VAR. 3.0"-9.0"±
- (E) HMA PAVEMENT VAR. 14.0"-19.0"±
- (F) PCC MEDIAN
- (G) PCC COMBO CURB & GUTTER
- (H) PCC SIDEWALK, 4.0"±
- (I) PAVED SHOULDER
- (J) STABILIZED SHOULDER
- (K) AGGREGATE SHOULDER
- (L) GUARDRAIL

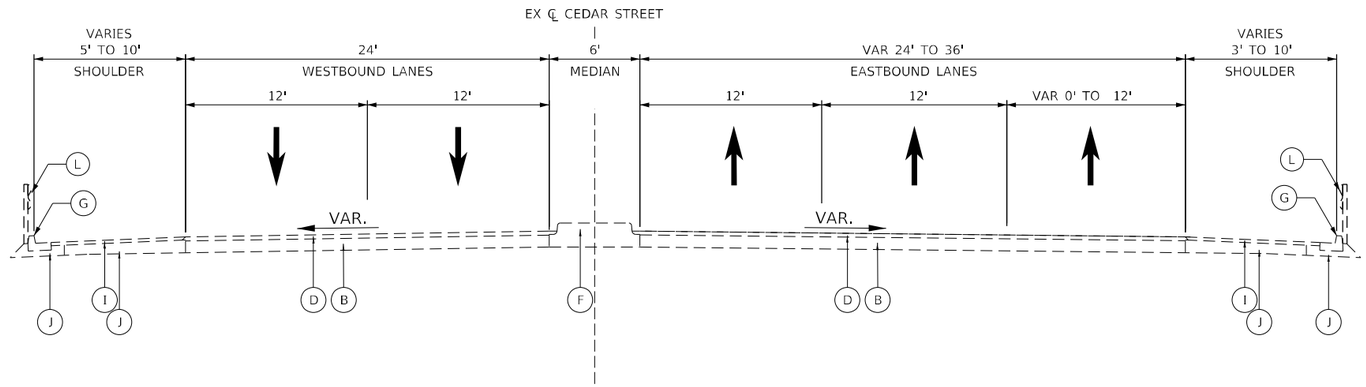


## TYPICAL SECTION – CEDAR STREET

STA. 67+67.40 TO STA. 70+20.00

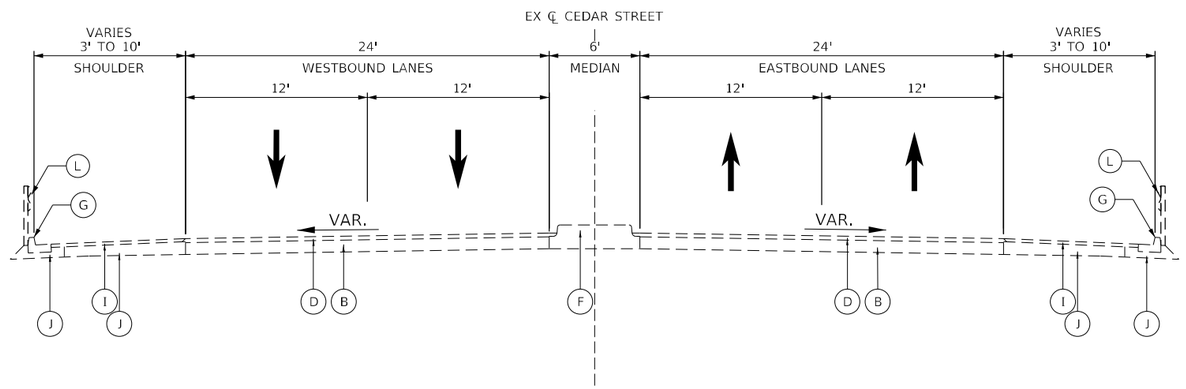


## TYPICAL SECTION – CEDAR STREET

STA. 70+20.00 TO STA. 80+52.00
(BRIDGE OMISSION STA 74+80.55 TO STA 81+82.85)

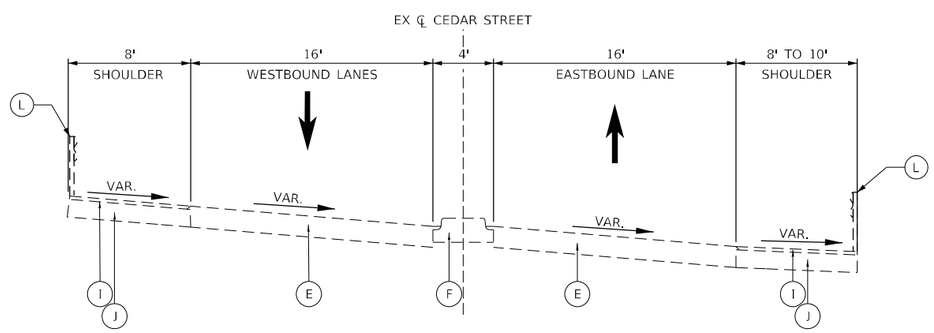


## TYPICAL SECTION – CEDAR STREET

STA 80+52.00 TO STA. 88+59.95
(BRIDGE OMISSION STA 74+80.55 TO STA 81+82.85)
(BRIDGE OMISSION STA 82+94.49 TO STA 84+52.62)

TYP-01

| | | | | | |
|---|---|---|---|---|---|
| Michael Baker INTERNATIONAL 200 W Adams Street Suite 1800 Chicago, IL 60606 PH: 312.707.8770 FAX: 312.707.8804 | USER NAME = DLamb | DESIGNED - TOM | REVISED - | STATE OF ILLINOIS DEPARTMENT OF TRANSPORTATION | CEDAR ST. (IL-84/L-116) OVER TZPR & IL-29 EXISTING TYPICAL SECTIONS – CEDAR STREET |
| | | DRAWN - MER | REVISED - | | |
| | PLOT SCALE = 10.0000 ' / in. | CHECKED - MJK | REVISED - | | |
| | PLOT DATE = 6/6/2023 | DATE - 6/08/2023 | REVISED - | | SCALE: NO SCALE SHEET 1 OF 5 SHEETS STA. TO STA. |

| F.A.P. RTE. | SECTION | COUNTY | TOTAL SHEETS | SHEET NO. |
|---|---|---|---|---|
| VAR. | 13 (HVB, HB-3) BR-1:R | TAZEWELL | 1173 | 34 |
| | | CONTRACT NO. 68C55 | | |
| | ILLINOIS | FED. AID PROJECT | | |

MODEL: Default
FILE NAME: pw:\\mo-s-pw.bentley.com:mb-c-pw-03\Documents\Chicago IL\01 Projects\179740 IDOT Cedar\Ext Phase 5.0 CADD\CAD Sheets\2468C55-ch-typicals01.dgn

## EXISTING TYPICAL SECTION LEGEND

- (A) PCC PAVEMENT VAR. 0.0"-5.0"±
- (B) PCC PAVEMENT VAR. 5.0"-9.0"±
- (C) CRUSHED GRAVEL VAR. 4.0"-7.0"±
- (D) HMA PAVEMENT VAR. 3.0"-9.0"±
- (E) HMA PAVEMENT VAR. 14.0"-19.0"±
- (F) PCC MEDIAN
- (G) PCC COMBO CURB & GUTTER
- (H) PCC SIDEWALK, 4.0"±
- (I) PAVED SHOULDER
- (J) STABILIZED SHOULDER
- (K) AGGREGATE SHOULDER
- (L) GUARDRAIL

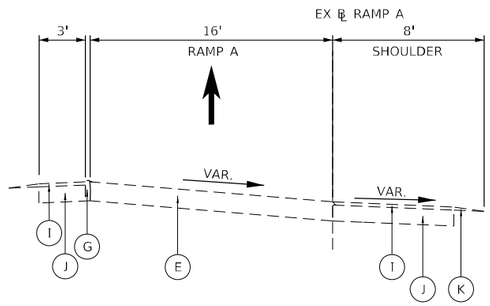


### TYPICAL SECTION – RAMP A

STA. 188+59.95 TO STA. 190+37.12

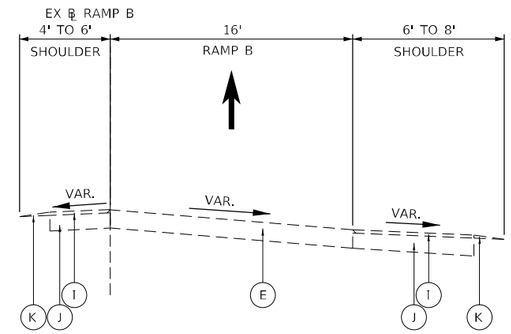


### TYPICAL SECTION – RAMP B

STA. 288+59.95 TO STA. 291+49.15

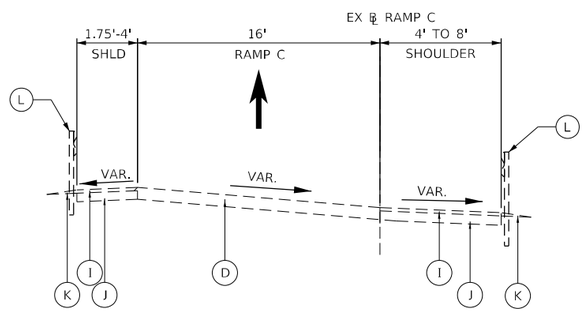


### TYPICAL SECTION – RAMP C

STA. 302+84.10 TO STA. 306+14.57

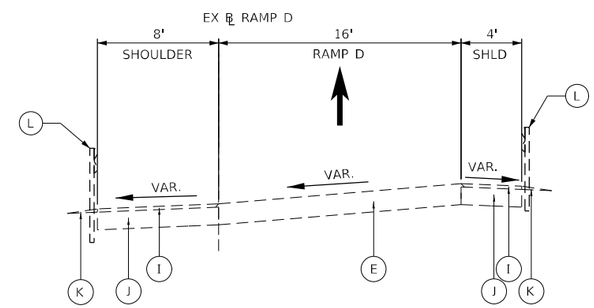


### TYPICAL SECTION – RAMP D

STA. 403+21.06 TO STA. 410+14.77

TYP-02

MODEL: Default
FILE NAME: pw:\\mb-us-pw.bentley.com:mb-us-pw-03\Documents\Chicago IL\01 Projects\179740 IDOT Cedar\SIE\4 PhII\5.0 CADD\CADD Sheets\D468C55-sht-typical02.dgn


Michael Baker INTERNATIONAL
200 W Adams Street
Suite 1800
Chicago, IL 60606
PH: 312.707.8772
FAX: 312.707.8804


| | | | |
|---|---|---|---|
| USER NAME = DLamb | DESIGNED - TOM | REVISED - | |
| | DRAWN - MER | REVISED - | |
| PLOT SCALE = 10.0000 ' / in. | CHECKED - MJK | REVISED - | |
| PLOT DATE = 6/6/2023 | DATE - 6/08/2023 | REVISED - | |

**STATE OF ILLINOIS**
**DEPARTMENT OF TRANSPORTATION**

**CEDAR ST. (IL-8/IL-116) OVER TZPR & IL-29**
**EXISTING TYPICAL SECTIONS – RAMPS A, B, C, & D**

SCALE: NO SCALE | SHEET 2 OF 5 SHEETS | STA. TO STA.

| F.A.P. RTE. | SECTION | COUNTY | TOTAL SHEETS | SHEET NO. |
|---|---|---|---|---|
| VAR. | 13 (HVB, HB-3) BR-1:R | TAZEWELL | 1173 | 35 |
| | | CONTRACT NO. 68C55 | | |
| | ILLINOIS | FED. AID PROJECT | | |

## EXISTING TYPICAL SECTION LEGEND

- (A) PCC PAVEMENT VAR. 0.0"-5.0"±
- (B) PCC PAVEMENT VAR. 5.0"-9.0"±
- (C) CRUSHED GRAVEL VAR. 4.0"-7.0"±
- (D) HMA PAVEMENT VAR. 3.0"-9.0"±
- (E) HMA PAVEMENT VAR. 14.0"-19.0"±
- (F) PCC MEDIAN
- (G) PCC COMBO CURB & GUTTER
- (H) PCC SIDEWALK, 4.0"±
- (I) PAVED SHOULDER
- (J) STABILIZED SHOULDER
- (K) AGGREGATE SHOULDER
- (L) GUARDRAIL

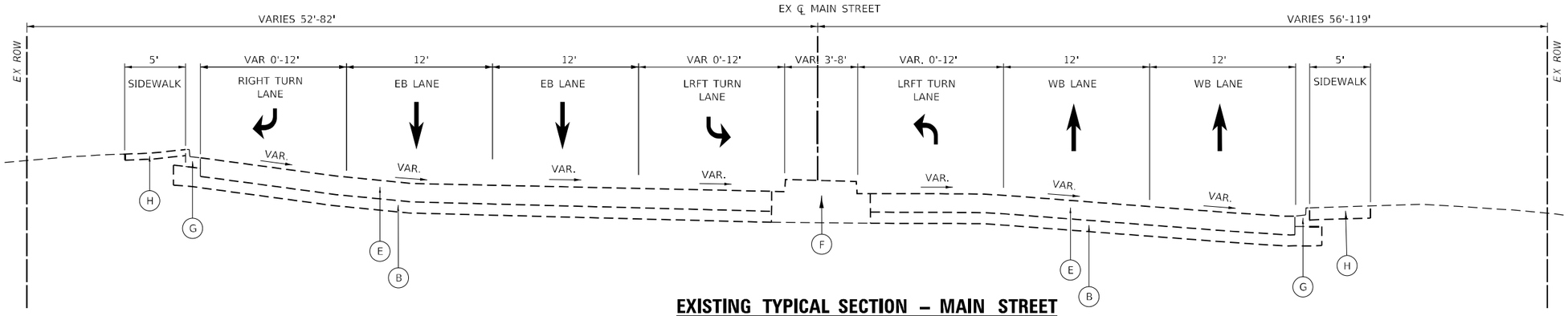


**EXISTING TYPICAL SECTION – MAIN STREET**

STA 96+90.00 TO STA 100+40.00

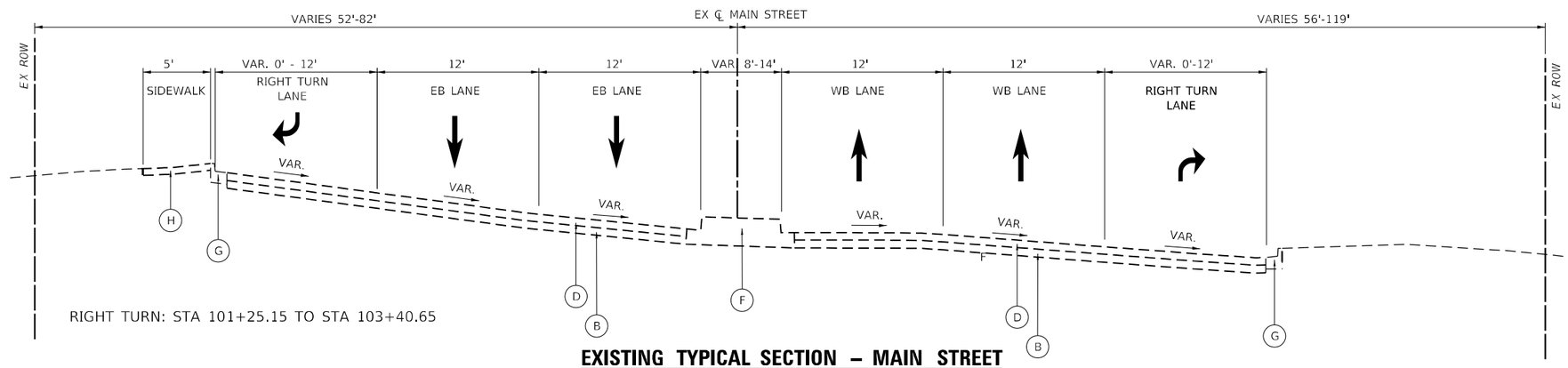


RIGHT TURN: STA 101+25.15 TO STA 103+40.65

**EXISTING TYPICAL SECTION – MAIN STREET**

STA 100+40.00 TO STA 102+50.00

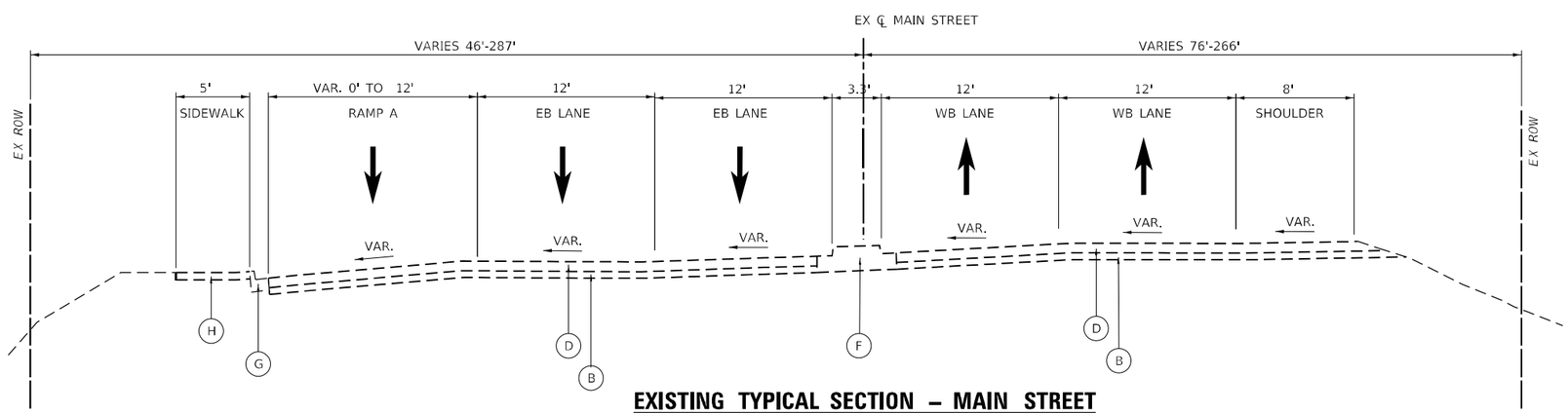


**EXISTING TYPICAL SECTION – MAIN STREET**

STA 102+50.00 TO STA 104+27.73

RAMP "A" : STA 104+40.18 TO STA 108+63.34

TYP-03

| | | | | | | | | | |
|---|---|---|---|---|---|---|---|---|---|
| Michael Baker INTERNATIONAL 200 W Adams Street Suite 1800 Chicago, IL 60606 PH: 312.707.6770 FAX: 312.707.8804 | USER NAME = Winson,Teng | DESIGNED - TOM | REVISED - | STATE OF ILLINOIS DEPARTMENT OF TRANSPORTATION | CEDAR ST. (IL-84/IL-116) OVER TZPR & IL-29 EXISTING TYPICAL SECTIONS – MAIN STREET | F.A.P. RTE. | SECTION | COUNTY | TOTAL SHEETS / SHEET NO. |
| | | DRAWN - MER | REVISED - | | | VAR. | 13 (HVB, HB-3) BR-1:R | TAZEWELL | 1173 / 36 |
| | PLOT SCALE = 10.0000 ' / in. | CHECKED - MJK | REVISED - | | | | | CONTRACT NO. 68C55 | |
| | PLOT DATE = 5/1/2025 | DATE - 4/08/2025 | REVISED - | | SCALE: NO SCALE / SHEET 3 OF 5 SHEETS / STA. TO STA. | | ILLINOIS | FED. AID PROJECT | |

MODEL: Default
FILE NAME: pw:\\mbi-pw.bentley.com:mbi-pw-ow01\Documents\Chicago_IL\01 Projects\179740 IDOT Cedar St\Ex Phase 3\Documents\CHI-Cedar-Ex-Typ-Sheets.dgn

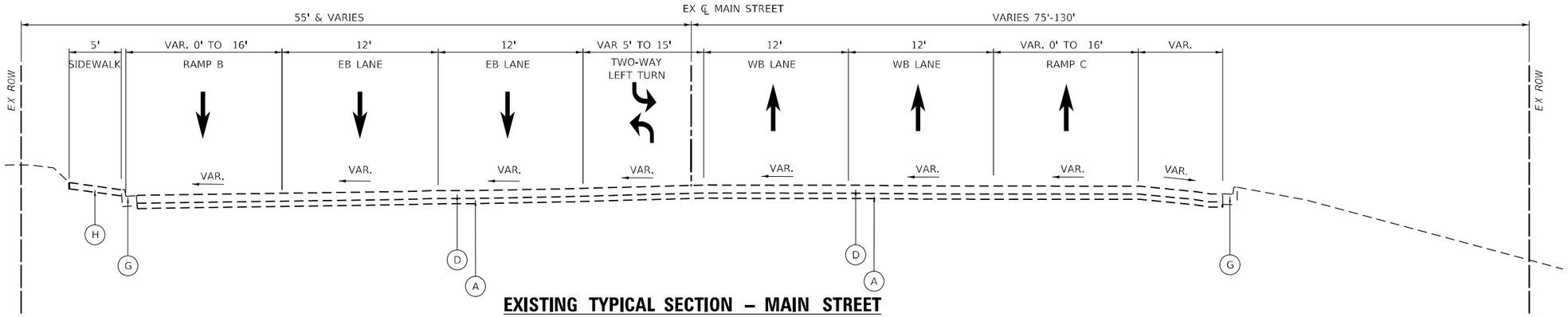


## EXISTING TYPICAL SECTION – MAIN STREET

STA 104+27.73 TO STA 115+30.00

RAMP "B" : STA 111+59.59 TO STA 113+00.00

RAMP "C" : STA 108+90.00 TO STA 114+30.00

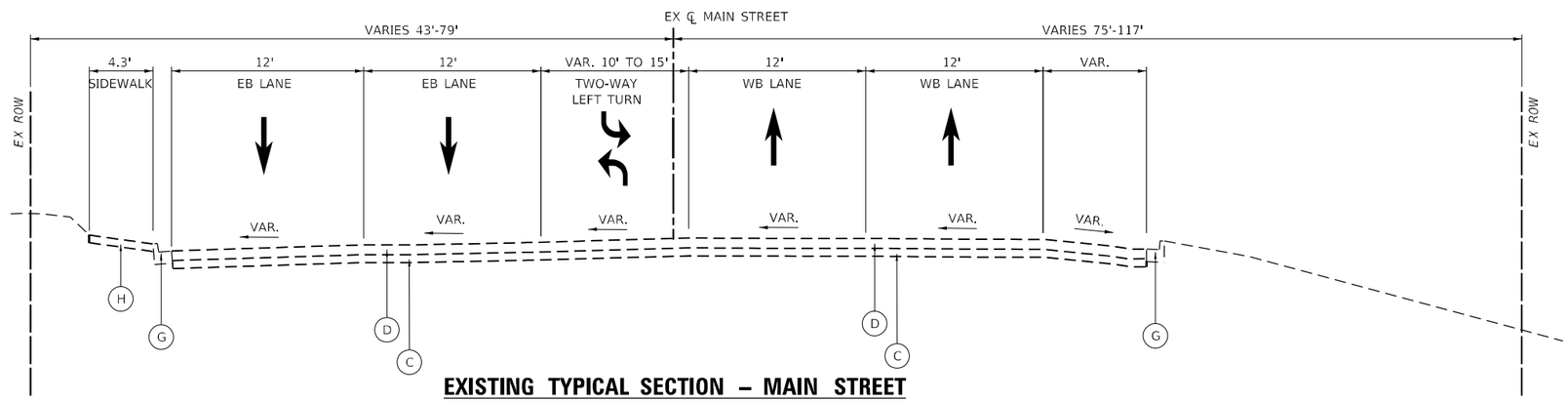


## EXISTING TYPICAL SECTION – MAIN STREET

STA 115+30.00 TO STA 123+16.12

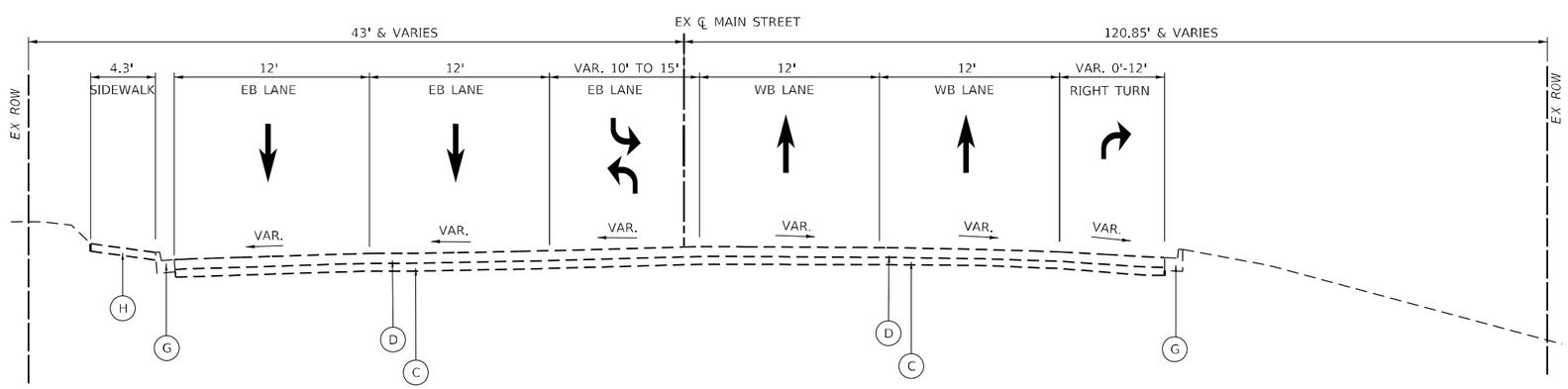


## EXISTING TYPICAL SECTION – MAIN STREET

STA 123+16.12 TO STA 124+15.00

## EXISTING TYPICAL SECTION LEGEND

- (A) PCC PAVEMENT VAR. 0.0"-5.0"±
- (B) PCC PAVEMENT VAR. 5.0"-9.0"±
- (C) CRUSHED GRAVEL VAR. 4.0"-7.0"±
- (D) HMA PAVEMENT VAR. 3.0"-9.0"±
- (E) HMA PAVEMENT VAR. 14.0"-19.0"±
- (F) PCC MEDIAN
- (G) PCC COMBO CURB & GUTTER
- (H) PCC SIDEWALK, 4.0"±
- (I) PAVED SHOULDER
- (J) STABILIZED SHOULDER
- (K) AGGREGATE SHOULDER
- (L) GUARDRAIL

TYP-04

Michael Baker INTERNATIONAL
200 W Adams Street
Suite 1800
Chicago, IL 60606
PH: 312.707.8770
FAX: 312.707.8804

| | | | |
|---|---|---|---|
| USER NAME = Winson.Teng | DESIGNED - TOM | REVISED - | |
| | DRAWN - MER | REVISED - | |
| PLOT SCALE = 10.0000 ' / in. | CHECKED - MJK | REVISED - | |
| PLOT DATE = 5/1/2025 | DATE - 4/08/2025 | REVISED - | |

**STATE OF ILLINOIS**
**DEPARTMENT OF TRANSPORTATION**

**CEDAR ST. (IL-81/IL-116) OVER TZPR & IL-29**
**EXISTING TYPICAL SECTIONS – MAIN STREET**

SCALE: NO SCALE | SHEET 4 OF 5 SHEETS | STA. TO STA.

| F.A.P. RTE. | SECTION | COUNTY | TOTAL SHEETS | SHEET NO. |
|---|---|---|---|---|
| VAR. | 13 (HVB, HB-3) BR-1:R | TAZEWELL | 1173 | 37 |
| | | CONTRACT NO. 68C55 | | |
| | | ILLINOIS | FED. AID PROJECT | |

MODEL: Default
FILE NAME: pw:\\mbakerintl.bentleycolorado.com:mbi-sqlpw03\Documents\Chicago (LX01 Projects\179740 IDOT CedarStSt PhII\5.0 CADD\CAD Sheets\D468C55-sht-typical04.dgn

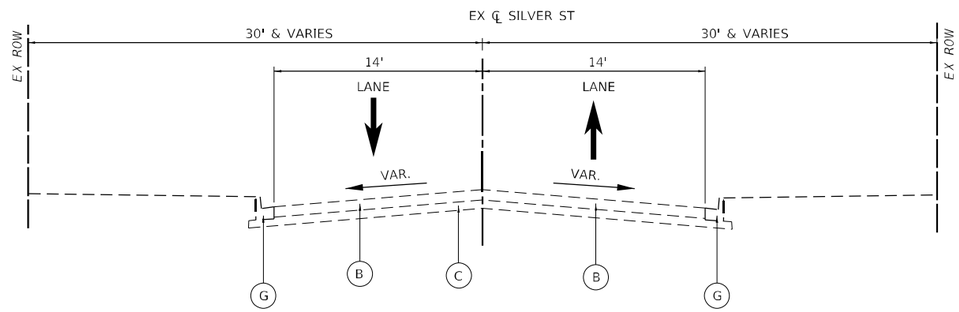


## TYPICAL SECTION – SILVER STREET

STA. 21+11.73 TO STA. 22+19.32

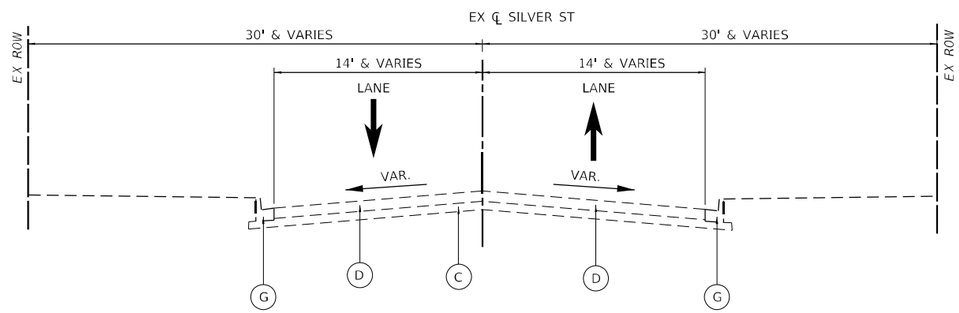


## TYPICAL SECTION – SILVER STREET

STA. 22+19.32 TO STA. 22+35.15

## EXISTING TYPICAL SECTION LEGEND

- (A) PCC PAVEMENT VAR. 0.0"-5.0"±
- (B) PCC PAVEMENT VAR. 5.0"-9.0"±
- (C) CRUSHED GRAVEL VAR. 4.0"-7.0"±
- (D) HMA PAVEMENT VAR. 3.0"-9.0"±
- (E) HMA PAVEMENT VAR. 14.0"-19.0"±
- (F) PCC MEDIAN
- (G) PCC COMBO CURB & GUTTER
- (H) PCC SIDEWALK, 4.0"±
- (I) PAVED SHOULDER
- (J) STABILIZED SHOULDER
- (K) AGGREGATE SHOULDER
- (L) GUARDRAIL

TYP-05

Michael Baker INTERNATIONAL
200 W Adams Street
Suite 1800
Chicago, IL 60606
PH: 312.707.8770
FAX: 312.707.8804

| | | | |
|---|---|---|---|
| USER NAME = DLamb | DESIGNED - TOM | REVISED - | |
| | DRAWN - MER | REVISED - | |
| PLOT SCALE = 10.0000 ' / in. | CHECKED - MJK | REVISED - | |
| PLOT DATE = 6/6/2023 | DATE - 6/08/2023 | REVISED - | |

**STATE OF ILLINOIS**
**DEPARTMENT OF TRANSPORTATION**

**CEDAR ST. (IL-8/IL-116) OVER TZPR & IL-29**
**EXISTING TYPICAL SECTIONS – SILVER STREET**

SCALE: NO SCALE | SHEET 5 OF 5 SHEETS | STA. TO STA.

| F.A.P. RTE. | SECTION | COUNTY | TOTAL SHEETS | SHEET NO. |
|---|---|---|---|---|
| VAR. | 13 (HVB, HB-3) BR-1:R | TAZEWELL | 1173 | 38 |
| | | CONTRACT NO. 68C55 | | |
| | ILLINOIS | FED. AID PROJECT | | |

MODEL: Default
FILE NAME: pw:\\mb-pw.com\mb-ae\pw_200\Documents\Chicago IL\01 Projects\179740 IDOT Cedar St\Ext Phase 2\CADD\CAD Sheets\D468C55-sht-typical04a.dgn

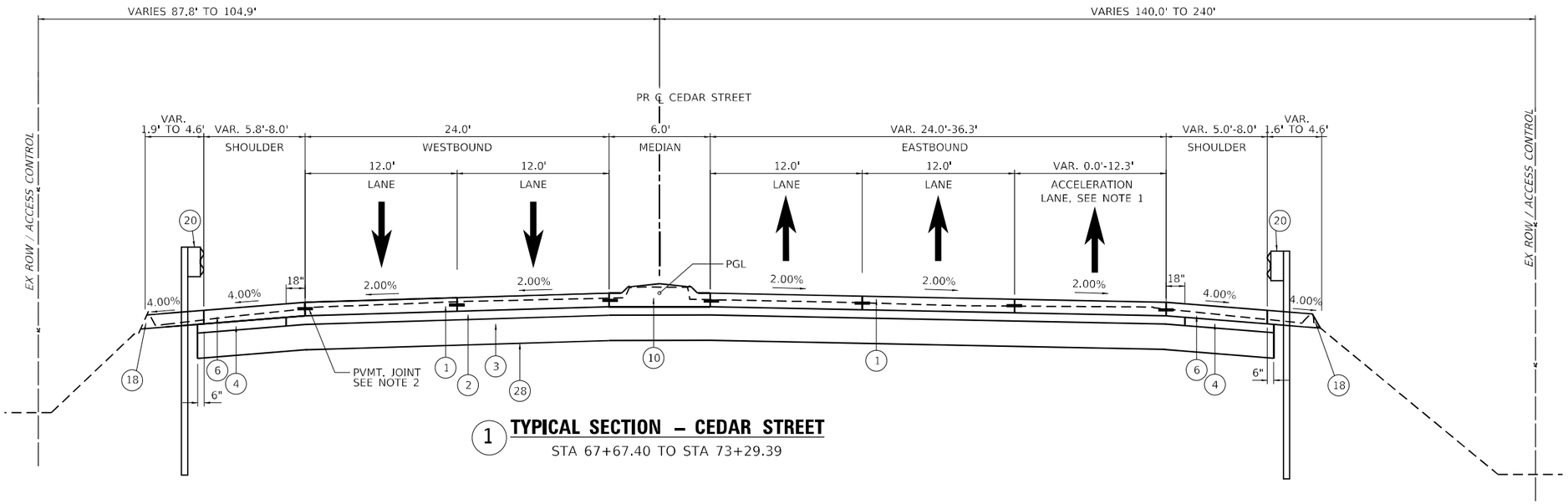


## 1 TYPICAL SECTION – CEDAR STREET

STA 67+67.40 TO STA 73+29.39

## PROPOSED TYPICAL SECTION LEGEND

1. PORTLAND CEMENT CONCRETE PAVEMENT 9" (JOINTED)
2. STABILIZED SUBBASE 4"
3. AGGREGATE SUBGRADE IMPROVEMENT 12"
4. SUBBASE GRANULAR MATERIAL, TYPE C, VAR. DEPTH
5. CHAIN LINK FENCE, 6' ATTACHED TO STRUCTURE
6. PORTLAND CEMENT CONCRETE SHOULDERS 9"
7. AGGREGATE SHOULDERS, TYPE B 8"
8. COMBINATION CONCRETE CURB AND GUTTER, TYPE B-6.24
9. CONCRETE MEDIAN, TYPE SB-6.12
10. CONCRETE MEDIAN, TYPE SM-6.12
11. CONCRETE GUTTER, TYPE A, (SPECIAL)
12. PORTLAND CEMENT CONCRETE SIDEWALK 4 INCH
13. STEEL PLATE BEAM GUARDRAIL, TYPE A, 6 FOOT POSTS
14. RETAINING WALL (SEE STRUCTURAL PLANS)
15. POLYMERIZED HOT-MIX ASPHALT SURFACE COURSE, IL-9.5, MIX "E", N70, 2"
16. POLYMERIZED HOT-MIX ASPHALT BINDER COURSE, IL-19.0, N70, 6.5"
17. AGGREGATE BASE COURSE, TYPE A 8"
18. GUARDRAIL AGGREGATE EROSION CONTROL
19. PAVED DITCH, TYPE A-15
20. STEEL PLATE BEAM GUARDRAIL, TYPE A, 9 FOOT POSTS
21. CONCRETE MEDIAN SURFACE. 4"
22. POLYMERIZED HOT MIX ASPHALT BINDER COURSE, IL-9.5, N70, 2.25"
23. CHAIN LINK FENCE, 8'
24. PORTLAND CEMENT CONCRETE CURB SIDEWALK 4 INCH (SPEC
25. COMBINATION CONCRETE CURB AND GUTTER TYPE B-6.12
26. POROUS GRANULAR EMBANKMENT
27. HOT-MIX ASPHALT SURFACE COURSE, IL-9.5, MIX "C", N50, 3"
28. GEOTECHNICAL FABRIC FOR GROUND STABILIZATION

## STRUCTURAL PAVEMENT DESIGN INFORMATION

(CEDAR ST.)

STRUCTURAL DESIGN TRAFFIC: YEAR 2042
PV = 13708 SU = 442 MU= 590
ROAD / STREET CLASSIFICATION: CLASS I
PERCENT OF STRUCTURAL DESIGN TRAFFIC IN DESIGN LANE:
P = 32% S = 45% M = 45%
TRAFFIC FACTOR: Actual TF = 4.28
SUBGRADE SUPPORT RATING:
SSR = POOR

## NOTES:

1. EASTBOUND ACCELERATION LANE ENDS AT STA. 70+52.83
2. SEE PAVEMENT JOINTING PLANS FOR TYPE OF JOINTS AND BARS.
3. PIPE UNDERDRAIN SHALL BE INSTALLED FOLLOWING THE PLACEMENT OF AGGREGATE SUBGRADE IMPROVEMENT 12".

TYP-06

MODEL: Default
FILE NAME: pw:\\mbi-us-pw.bentley.com:mbi-us-pw-03\Documents\Chicago IL\01 Projects\179740 IDOT Cedar\Sifex Path\5.0 CADD\CAD Sheets\0268C55-sht-typical05.dgn

Michael Baker INTERNATIONAL
200 W Adams Street
Suite 1800
Chicago, IL 60606
P: 312.707.8770
FAX: 312.707.8804

| | | | |
|---|---|---|---|
| USER NAME = DLamb | DESIGNED - SAS | REVISED - | |
| | DRAWN - DCL | REVISED - | |
| PLOT SCALE = 10.0000 ' / in. | CHECKED - RBB | REVISED - | |
| PLOT DATE = 6/6/2023 | DATE - 6/08/2023 | REVISED - | |

**STATE OF ILLINOIS**
**DEPARTMENT OF TRANSPORTATION**

**CEDAR ST. (IL-8/IL-116) OVER TZPR & IL-29**
**PROPOSED TYPICAL SECTIONS – CEDAR STREET**

SCALE: NO SCALE | SHEET 1 OF 13 SHEETS | STA. TO STA.

| F.A.P. RTE. | SECTION | COUNTY | TOTAL SHEETS | SHEET NO. |
|---|---|---|---|---|
| VAR. | 13 (HVB, HB-3) BR-1:R | TAZEWELL | 1173 | 39 |
| | | CONTRACT NO. 68C55 | | |
| | ILLINOIS | FED. AID PROJECT | | |

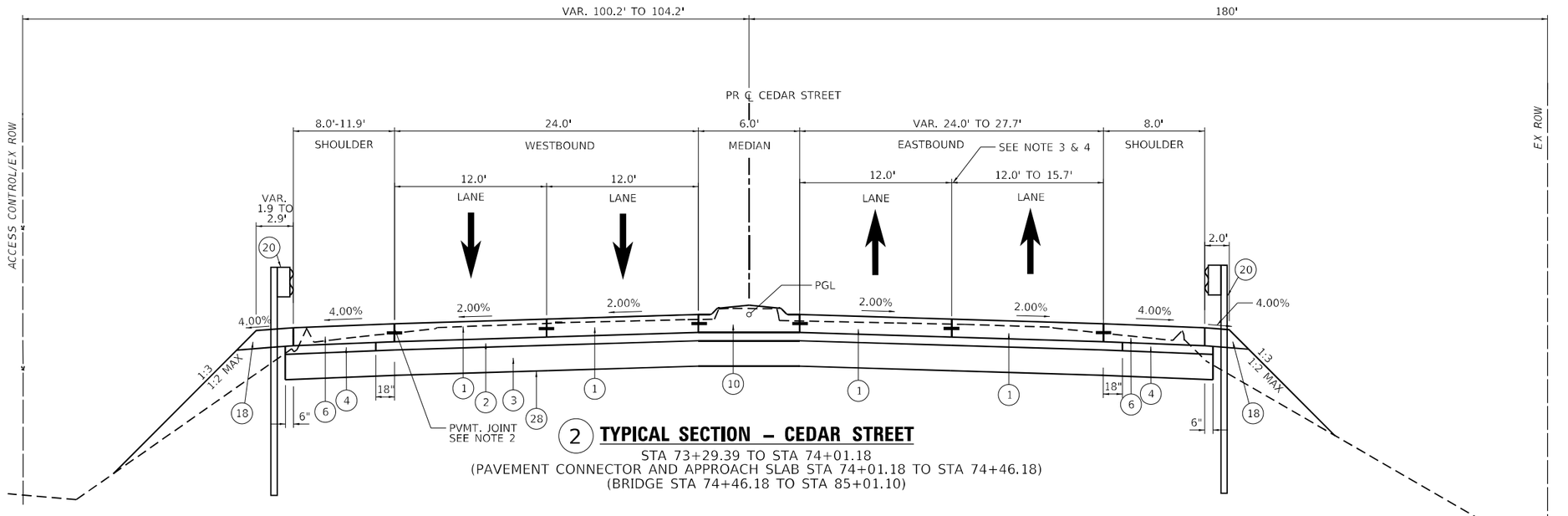


## 2 TYPICAL SECTION – CEDAR STREET

STA 73+29.39 TO STA 74+01.18
(PAVEMENT CONNECTOR AND APPROACH SLAB STA 74+01.18 TO STA 74+46.18)
(BRIDGE STA 74+46.18 TO STA 85+01.10)

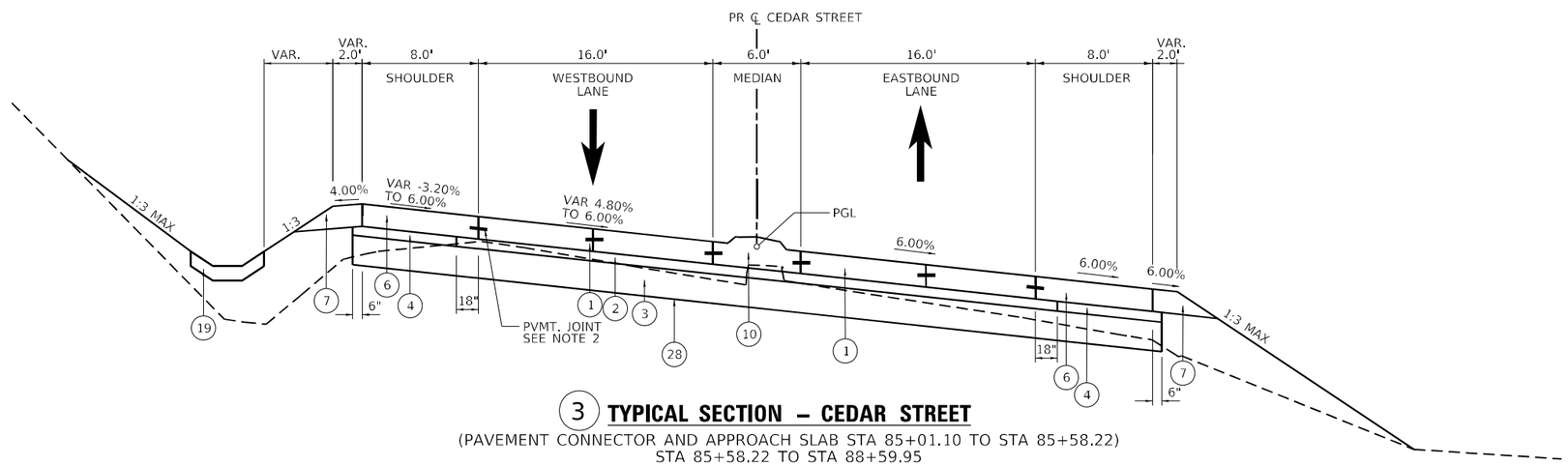


## 3 TYPICAL SECTION – CEDAR STREET

(PAVEMENT CONNECTOR AND APPROACH SLAB STA 85+01.10 TO STA 85+58.22)
STA 85+58.22 TO STA 88+59.95

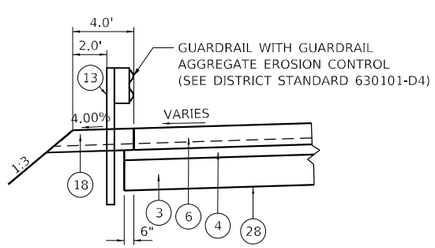


CEDAR STREET EXTENSION GUARDRAIL SECTION
LT STA 85+58.22 TO STA 86+10.50
RT STA 85+58.22 TO STA 86+91.49

## PROPOSED TYPICAL SECTION LEGEND

1. PORTLAND CEMENT CONCRETE PAVEMENT 9" (JOINTED)
2. STABILIZED SUBBASE 4"
3. AGGREGATE SUBGRADE IMPROVEMENT 12"
4. SUBBASE GRANULAR MATERIAL, TYPE C, VAR. DEPTH
5. CHAIN LINK FENCE, 6' ATTACHED TO STRUCTURE
6. PORTLAND CEMENT CONCRETE SHOULDERS 9"
7. AGGREGATE SHOULDERS, TYPE B 8"
8. COMBINATION CONCRETE CURB AND GUTTER, TYPE B-6.24
9. CONCRETE MEDIAN, TYPE SB-6.12
10. CONCRETE MEDIAN, TYPE SM-6.12
11. CONCRETE GUTTER, TYPE A, (SPECIAL)
12. PORTLAND CEMENT CONCRETE SIDEWALK 4 INCH
13. STEEL PLATE BEAM GUARDRAIL, TYPE A, 6 FOOT POSTS
14. RETAINING WALL (SEE STRUCTURAL PLANS)
15. POLYMERIZED HOT-MIX ASPHALT SURFACE COURSE, IL-9.5, MIX "E", N70, 2"
16. POLYMERIZED HOT-MIX ASPHALT BINDER COURSE, IL-19.0, N70, 6.5"
17. AGGREGATE BASE COURSE, TYPE A 8"
18. GUARDRAIL AGGREGATE EROSION CONTROL
19. PAVED DITCH, TYPE A-15
20. STEEL PLATE BEAM GUARDRAIL, TYPE A, 9 FOOT POSTS
21. CONCRETE MEDIAN SURFACE. 4"
22. POLYMERIZED HOT MIX ASPHALT BINDER COURSE, IL-9.5, N70, 2.25"
23. CHAIN LINK FENCE, 8'
24. PORTLAND CEMENT CONCRETE CURB SIDEWALK 4 INCH (SPEC
25. COMBINATION CONCRETE CURB AND GUTTER TYPE B-6.12
26. POROUS GRANULAR EMBANKMENT
27. HOT-MIX ASPHALT SURFACE COURSE, IL-9.5, MIX "C", N50, 3"
28. GEOTECHNICAL FABRIC FOR GROUND STABILIZATION

## STRUCTURAL PAVEMENT DESIGN INFORMATION

(CEDAR ST.)

STRUCTURAL DESIGN TRAFFIC: YEAR 2042
PV = 13708 SU = 442 MU= 590
ROAD / STREET CLASSIFICATION: CLASS I
PERCENT OF STRUCTURAL DESIGN TRAFFIC IN DESIGN LANE:
P = 32% S = 45% M = 45%
TRAFFIC FACTOR: Actual TF = 4.28
SUBGRADE SUPPORT RATING:
SSR = POOR

## NOTES:

1. FOR SUPERELEVATION TRANSITIONS SEE ROADWAY DETAILS - SUPER ELEVATIONS TRANSITION.
2. SEE PAVEMENT JOINTING PLANS FOR TYPE OF JOINTS AND BARS
3. FOR GORE TRANSITIONS SEE ROADWAY DETAILS - GORE DETAILS.
4. GORE BEGINS STA 74+26.13

TYP-07

Michael Baker INTERNATIONAL
200 W Adams Street Suite 1800 Chicago, IL 60606 PH: 312.707.8770 FAX: 312.707.8804

| | | | |
|---|---|---|---|
| USER NAME = DLamb | DESIGNED - SAS | REVISED - | |
| | DRAWN - DCL | REVISED - | |
| PLOT SCALE = 10.0000 ' / in. | CHECKED - RBB | REVISED - | |
| PLOT DATE = 6/6/2023 | DATE - 6/08/2023 | REVISED - | |

STATE OF ILLINOIS
DEPARTMENT OF TRANSPORTATION

CEDAR ST. (IL-84/IL-116) OVER TZPR & IL-29
PROPOSED TYPICAL SECTIONS – CEDAR STREET

SCALE: NO SCALE | SHEET 2 OF 13 SHEETS | STA. TO STA.

| F.A.P. RTE. | SECTION | COUNTY | TOTAL SHEETS | SHEET NO. |
|---|---|---|---|---|
| VAR. | 13 (HVB, HB-3) BR-1;R | TAZEWELL | 1173 | 40 |
| | | CONTRACT NO. 68C55 | | |
| | ILLINOIS | FED. AID PROJECT | | |

MODEL: Default
FILE NAME: pw:\\mba-us-pw.bentley.com:mba-us-pw-03\Documents\Chicago IL\01 Projects\179740 IDOT Cedar\SHEX Phll\5.0 CADD\CAD Sheets\0468C55-sht-typical06.dgn

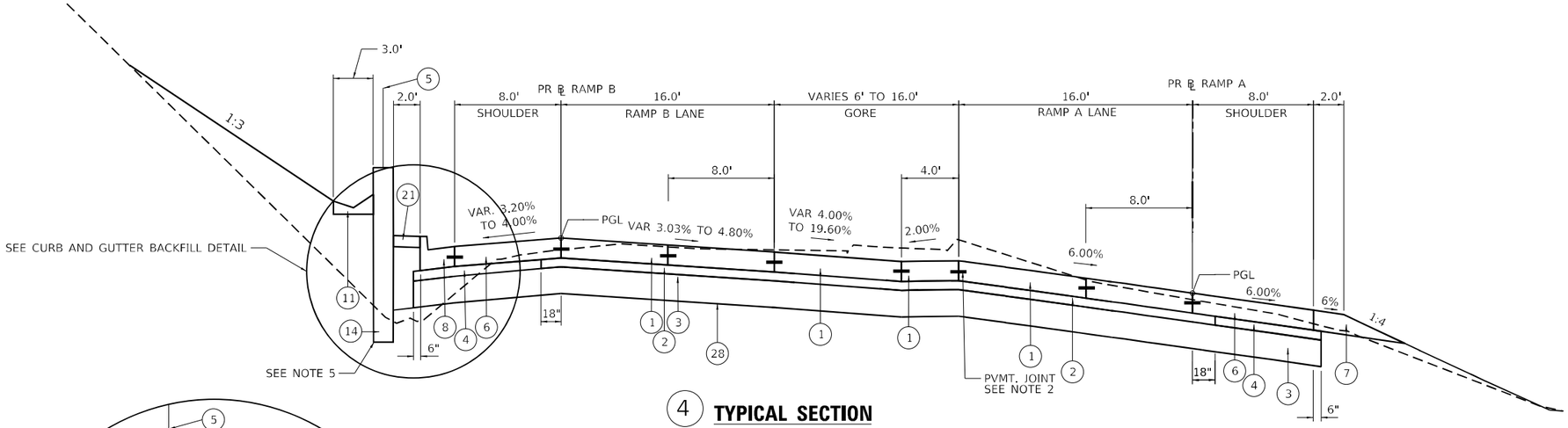


## 4 TYPICAL SECTION

RAMP A STA 188+59.95 TO STA 188+98.92
RAMP B STA 288+59.95 TO STA 289+06.94

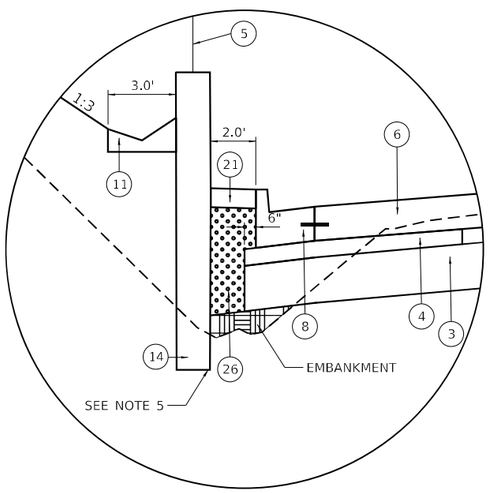


## CURB AND GUTTER BACKFILL DETAIL

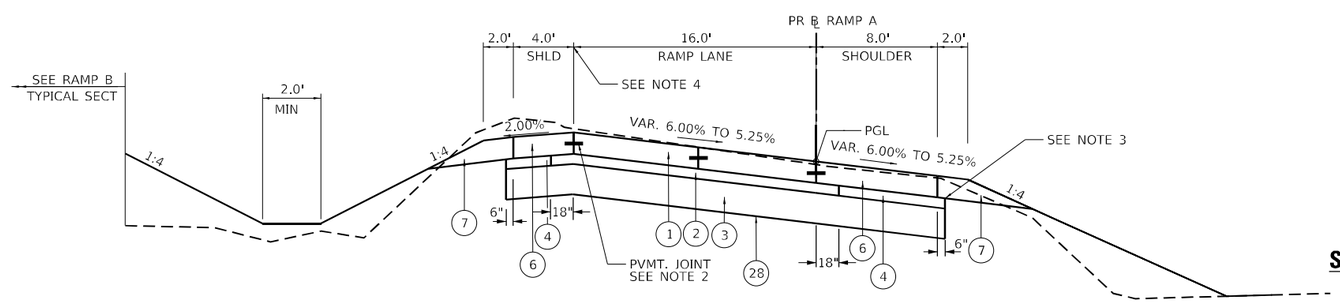


## 5 TYPICAL SECTION – RAMP A

STA 188+98.92 TO STA 190+61.17

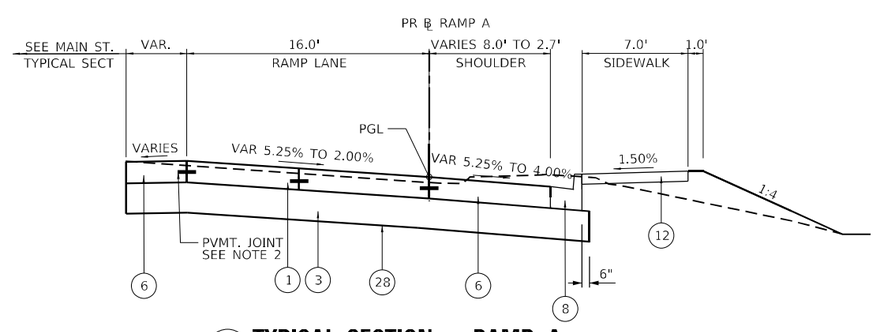


## 6 TYPICAL SECTION – RAMP A

STA 190+61.17 TO STA 192+06.27
SEE MAIN STREET TYPICAL SECTIONS (STA 104+00.04 TO STA 107+37.59)
FOR RAMP A STA 192+06.36 TO STA 195+39.79

## PROPOSED TYPICAL SECTION LEGEND

1. PORTLAND CEMENT CONCRETE PAVEMENT 9" (JOINTED)
2. STABILIZED SUBBASE 4"
3. AGGREGATE SUBGRADE IMPROVEMENT 12"
4. SUBBASE GRANULAR MATERIAL, TYPE C, VAR. DEPTH
5. CHAIN LINK FENCE, 6' ATTACHED TO STRUCTURE
6. PORTLAND CEMENT CONCRETE SHOULDERS 9"
7. AGGREGATE SHOULDERS, TYPE B 8"
8. COMBINATION CONCRETE CURB AND GUTTER, TYPE B-6.24
9. CONCRETE MEDIAN, TYPE SB-6.12
10. CONCRETE MEDIAN, TYPE SM-6.12
11. CONCRETE GUTTER, TYPE A, (SPECIAL)
12. PORTLAND CEMENT CONCRETE SIDEWALK 4 INCH
13. STEEL PLATE BEAM GUARDRAIL, TYPE A, 6 FOOT POSTS
14. RETAINING WALL (SEE STRUCTURAL PLANS)
15. POLYMERIZED HOT-MIX ASPHALT SURFACE COURSE, IL-9.5, MIX "E", N70, 2"
16. POLYMERIZED HOT-MIX ASPHALT BINDER COURSE, IL-19.0, N70, 6.5"
17. AGGREGATE BASE COURSE, TYPE A 8"
18. GUARDRAIL AGGREGATE EROSION CONTROL
19. PAVED DITCH, TYPE A-15
20. STEEL PLATE BEAM GUARDRAIL, TYPE A, 9 FOOT POSTS
21. CONCRETE MEDIAN SURFACE, 4"
22. POLYMERIZED HOT MIX ASPHALT BINDER COURSE, IL-9.5, N70, 2.25"
23. CHAIN LINK FENCE, 8'
24. PORTLAND CEMENT CONCRETE CURB SIDEWALK 4 INCH (SPEC
25. COMBINATION CONCRETE CURB AND GUTTER TYPE B-6.12
26. POROUS GRANULAR EMBANKMENT
27. HOT-MIX ASPHALT SURFACE COURSE, IL-9.5, MIX "C", N50, 3"
28. GEOTECHNICAL FABRIC FOR GROUND STABILIZATION

## STRUCTURAL PAVEMENT DESIGN INFORMATION

(RAMP A)

STRUCTURAL DESIGN TRAFFIC: YEAR 2042
PV = 2642 SU = 119 MU= 74
ROAD / STREET CLASSIFICATION: CLASS I
PERCENT OF STRUCTURAL DESIGN TRAFFIC IN DESIGN LANE:
P = 100% S = 100% M = 100%
TRAFFIC FACTOR: Actual TF = 1.38
SUBGRADE SUPPORT RATING:
SSR = POOR

(RAMP B)

STRUCTURAL DESIGN TRAFFIC: YEAR 2042
PV = 2668 SU = 120 MU= 74
ROAD / STREET CLASSIFICATION: CLASS I
PERCENT OF STRUCTURAL DESIGN TRAFFIC IN DESIGN LANE:
P = 100% S = 100% M = 100%
TRAFFIC FACTOR: Actual TF = 1.39
SUBGRADE SUPPORT RATING:
SSR = POOR

## NOTES:

1. FOR SUPERELEVATION TRANSITIONS SEE ROADWAY DETAILS - SUPER ELEVATIONS TRANSITION.
2. SEE PAVEMENT JOINTING PLANS FOR TYPE OF JOINTS AND BARS
3. CURB SECTION STA. 190+20.31 RT TO STA. 190+61.17 RT AND STA. 190+24.26 LT TO STA. 190+49.54 LT.
4. RAMP A STA. 190+49.54 LT TO STA. 190+61.17 LT SEE GORE DETAIL SHEET.
5. SEE STRUCTURAL PLAN SHEETS S4-19 & S4-20 FOR DRAINAGE STRUCTURE FROM STA 288+60 TO 288+70

TYP-08

Michael Baker INTERNATIONAL
200 W Adams Street
Suite 1800
Chicago, IL 60606
PH: 312.707.6770
FAX: 312.707.8604

| | | | |
|---|---|---|---|
| USER NAME = DLamb | DESIGNED - SAS | REVISED - | |
| | DRAWN - DCL | REVISED - | |
| PLOT SCALE = 10.0000 ' / in. | CHECKED - RBB | REVISED - | |
| PLOT DATE = 6/6/2023 | DATE - 6/08/2023 | REVISED - | |

STATE OF ILLINOIS
DEPARTMENT OF TRANSPORTATION

CEDAR ST. (IL-8/IL-116) OVER TZPR & IL-29
PROPOSED TYPICAL SECTIONS – RAMP A & B

SCALE: SHEET 3 OF 13 SHEETS STA. TO STA.

| F.A.P. RTE. | SECTION | COUNTY | TOTAL SHEETS | SHEET NO. |
|---|---|---|---|---|
| VAR. | 13 (HVB, HB-3) BR-1;R | TAZEWELL | 1173 | 41 |
| | | CONTRACT NO. 68C55 | | |
| | ILLINOIS | FED. AID PROJECT | | |

MODEL: Default
TILE NAME: pw:\\mb-ae-pw.bentley.com:mb-ae-pw-02\Documents\Civil\esip-IL\01_Projects\179710 IDOT Cedar St\Ext Phase 0 CAD\CAD Sheet\D468C55-sht-typ-ref03a.dgn

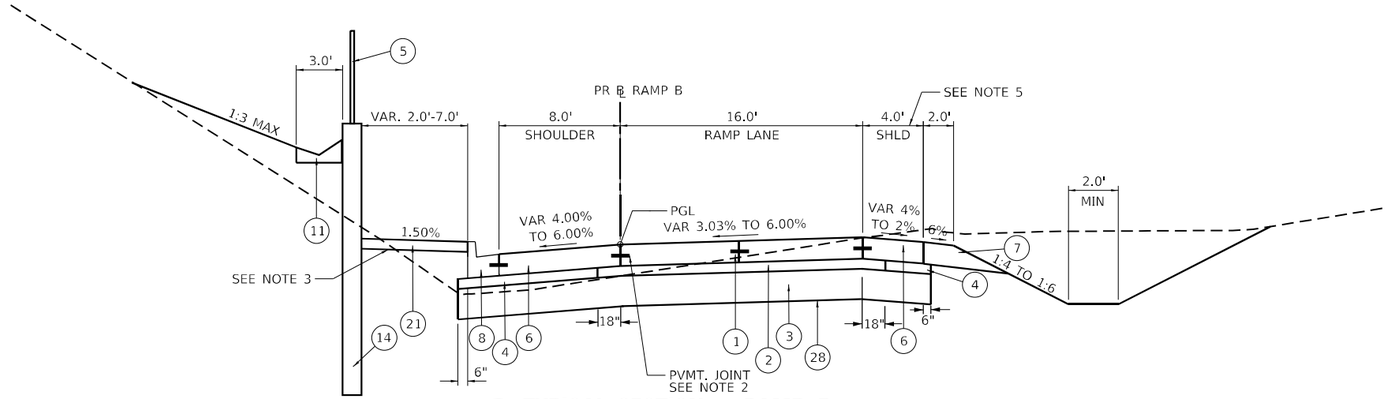


## 7 TYPICAL SECTION – RAMP B

STA 289+06.94 TO STA 292+03.77

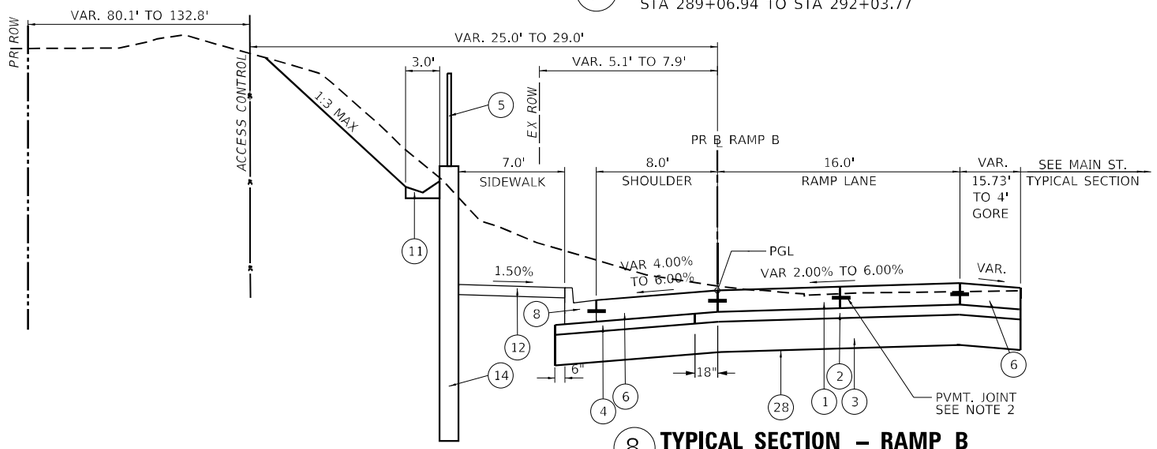


## 8 TYPICAL SECTION – RAMP B

STA 292+03.77 TO STA 294+65.43

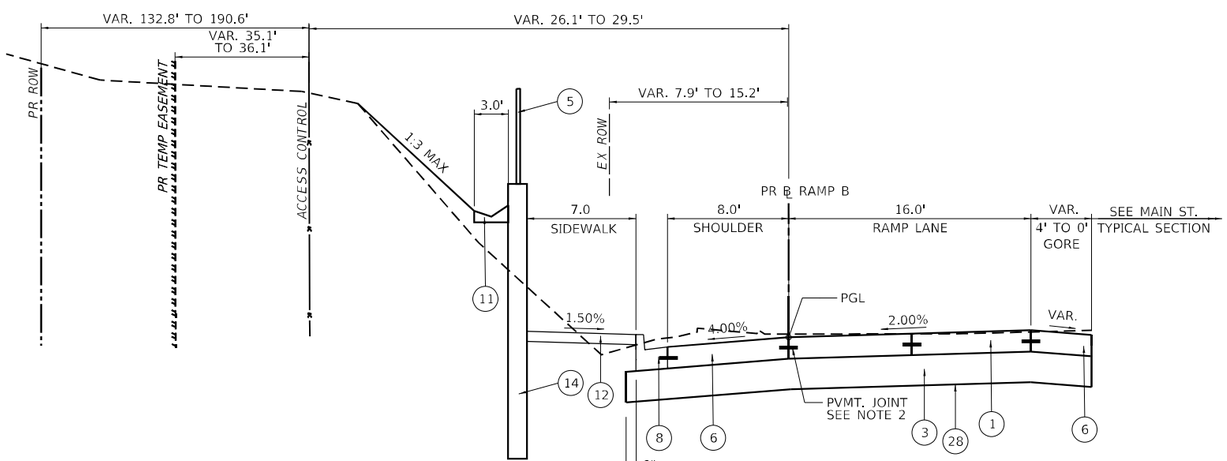


## 9 TYPICAL SECTION – RAMP B

STA 294+65.43 TO STA 296+62.14

SEE MAIN STREET TYPICAL SECTIONS (STA 116+77.83 TO STA 121+19.09)

FOR RAMP B STA 296+62.14 TO STA 301+03.19

## PROPOSED TYPICAL SECTION LEGEND

1. PORTLAND CEMENT CONCRETE PAVEMENT 9" (JOINTED)
2. STABILIZED SUBBASE 4"
3. AGGREGATE SUBGRADE IMPROVEMENT 12"
4. SUBBASE GRANULAR MATERIAL, TYPE C, VAR. DEPTH
5. CHAIN LINK FENCE, 6' ATTACHED TO STRUCTURE
6. PORTLAND CEMENT CONCRETE SHOULDERS 9"
7. AGGREGATE SHOULDERS, TYPE B 8"
8. COMBINATION CONCRETE CURB AND GUTTER, TYPE B-6.24
9. CONCRETE MEDIAN, TYPE SB-6.12
10. CONCRETE MEDIAN, TYPE SM-6.12
11. CONCRETE GUTTER, TYPE A, (SPECIAL)
12. PORTLAND CEMENT CONCRETE SIDEWALK 4 INCH
13. STEEL PLATE BEAM GUARDRAIL, TYPE A, 6 FOOT POSTS
14. RETAINING WALL (SEE STRUCTURAL PLANS)
15. POLYMERIZED HOT-MIX ASPHALT SURFACE COURSE, IL-9.5, MIX "E", N70, 2"
16. POLYMERIZED HOT-MIX ASPHALT BINDER COURSE, IL-19.0, N70, 6.5"
17. AGGREGATE BASE COURSE, TYPE A 8"
18. GUARDRAIL AGGREGATE EROSION CONTROL
19. PAVED DITCH, TYPE A-15
20. STEEL PLATE BEAM GUARDRAIL, TYPE A, 9 FOOT POSTS
21. CONCRETE MEDIAN SURFACE, 4"
22. POLYMERIZED HOT MIX ASPHALT BINDER COURSE, IL-9.5, N70, 2.25"
23. CHAIN LINK FENCE, 8'
24. PORTLAND CEMENT CONCRETE CURB SIDEWALK 4 INCH (SPEC
25. COMBINATION CONCRETE CURB AND GUTTER TYPE B-6.12
26. POROUS GRANULAR EMBANKMENT
27. HOT-MIX ASPHALT SURFACE COURSE, IL-9.5, MIX "C", N50, 3"
28. GEOTECHNICAL FABRIC FOR GROUND STABILIZATION

## STRUCTURAL PAVEMENT DESIGN INFORMATION

(RAMP B)

STRUCTURAL DESIGN TRAFFIC: YEAR 2042
PV = 2668 SU = 120 MU= 74
ROAD / STREET CLASSIFICATION: CLASS I
PERCENT OF STRUCTURAL DESIGN TRAFFIC IN DESIGN LANE:
P = 100% S = 100% M = 100%
TRAFFIC FACTOR: Actual TF = 1.39
SUBGRADE SUPPORT RATING:
SSR = POOR

## NOTES:

1. FOR SUPERELEVATION TRANSITIONS SEE ROADWAY DETAILS - SUPER ELEVATIONS TRANSITION.
2. SEE PAVEMENT JOINTING PLANS FOR TYPE OF JOINTS AND BARS.
3. SIDEWALK BEGINS STA. 291+80.81.
4. RAMP B STA. 292+03.77 RT TO STA 296+13.47 RT SEE GORE DETAIL SHEET.
5. CURB SECTION BEGINS STA. 291+68.13 RT TO 292+03.77 RT.

TYP-09

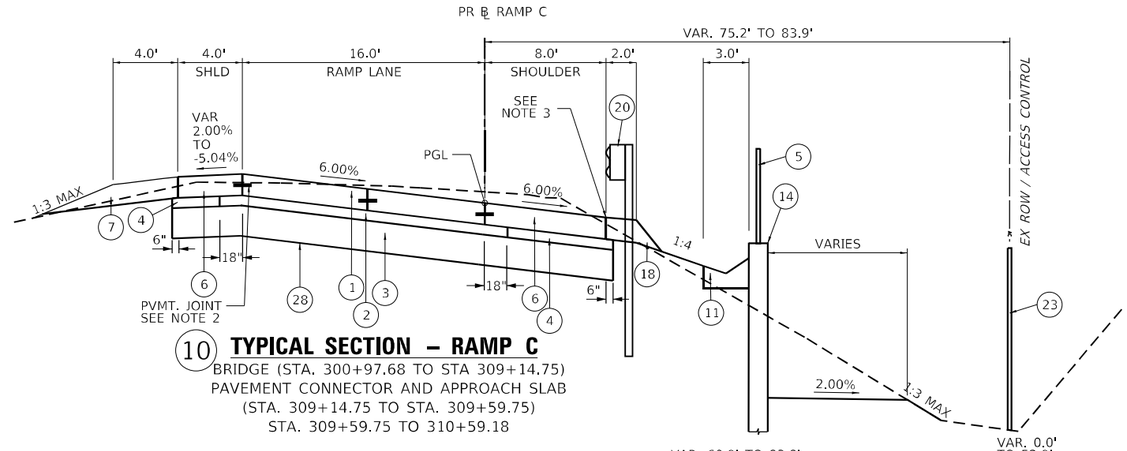


## 10 TYPICAL SECTION – RAMP C

BRIDGE (STA. 300+97.68 TO STA 309+14.75)
PAVEMENT CONNECTOR AND APPROACH SLAB
(STA. 309+14.75 TO STA. 309+59.75)
STA. 309+59.75 TO 310+59.18

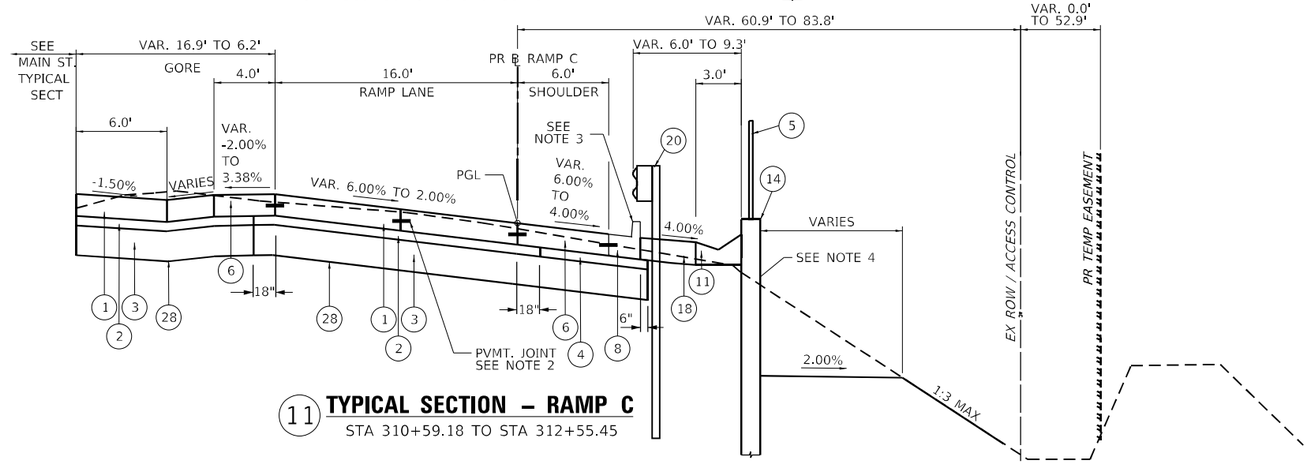


## 11 TYPICAL SECTION – RAMP C

STA 310+59.18 TO STA 312+55.45

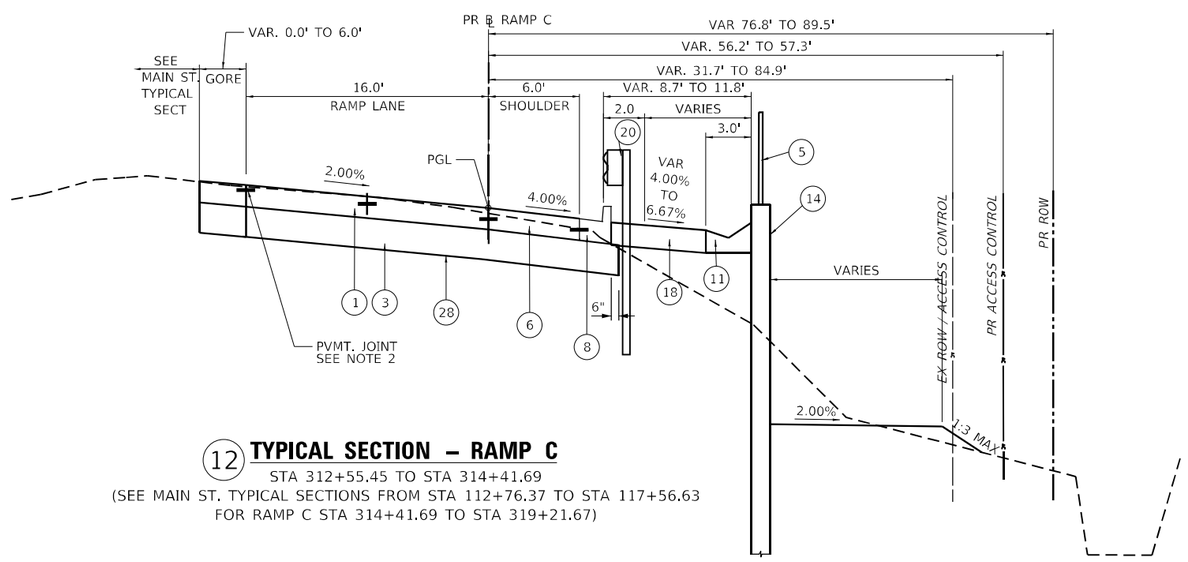


## 12 TYPICAL SECTION – RAMP C

STA 312+55.45 TO STA 314+41.69
(SEE MAIN ST. TYPICAL SECTIONS FROM STA 112+76.37 TO STA 117+56.63
FOR RAMP C STA 314+41.69 TO STA 319+21.67)

## PROPOSED TYPICAL SECTION LEGEND

1. PORTLAND CEMENT CONCRETE PAVEMENT 9" (JOINTED)
2. STABILIZED SUBBASE 4"
3. AGGREGATE SUBGRADE IMPROVEMENT 12"
4. SUBBASE GRANULAR MATERIAL, TYPE C, VAR. DEPTH
5. CHAIN LINK FENCE, 6' ATTACHED TO STRUCTURE
6. PORTLAND CEMENT CONCRETE SHOULDERS 9"
7. AGGREGATE SHOULDERS, TYPE B 8"
8. COMBINATION CONCRETE CURB AND GUTTER, TYPE B-6.24
9. CONCRETE MEDIAN, TYPE SB-6.12
10. CONCRETE MEDIAN, TYPE SM-6.12
11. CONCRETE GUTTER, TYPE A, (SPECIAL)
12. PORTLAND CEMENT CONCRETE SIDEWALK 4 INCH
13. STEEL PLATE BEAM GUARDRAIL, TYPE A, 6 FOOT POSTS
14. RETAINING WALL (SEE STRUCTURAL PLANS)
15. POLYMERIZED HOT-MIX ASPHALT SURFACE COURSE, IL-9.5, MIX "E", N70, 2"
16. POLYMERIZED HOT-MIX ASPHALT BINDER COURSE, IL-19.0, N70, 6.5"
17. AGGREGATE BASE COURSE, TYPE A 8"
18. GUARDRAIL AGGREGATE EROSION CONTROL
19. PAVED DITCH, TYPE A-15
20. STEEL PLATE BEAM GUARDRAIL, TYPE A, 9 FOOT POSTS
21. CONCRETE MEDIAN SURFACE. 4"
22. POLYMERIZED HOT MIX ASPHALT BINDER COURSE, IL-9.5, N70, 2.25"
23. CHAIN LINK FENCE, 8'
24. PORTLAND CEMENT CONCRETE CURB SIDEWALK 4 INCH (SPEC
25. COMBINATION CONCRETE CURB AND GUTTER TYPE B-6.12
26. POROUS GRANULAR EMBANKMENT
27. HOT-MIX ASPHALT SURFACE COURSE, IL-9.5, MIX "C", N50, 3"
28. GEOTECHNICAL FABRIC FOR GROUND STABILIZATION

## STRUCTURAL PAVEMENT DESIGN INFORMATION

(RAMP C)

STRUCTURAL DESIGN TRAFFIC: YEAR 2042
PV = 2802 SU = 135 MU= 69
ROAD / STREET CLASSIFICATION: CLASS I
PERCENT OF STRUCTURAL DESIGN TRAFFIC IN DESIGN LANE:
P = 100% S = 100% M = 100%
TRAFFIC FACTOR: Actual TF = 1.36
SUBGRADE SUPPORT RATING:
SSR = POOR

## NOTES:

1. FOR SUPERELEVATION TRANSITIONS SEE ROADWAY DETAILS - SUPER ELEVATIONS TRANSITION.
2. SEE PAVEMENT JOINTING PLANS FOR TYPE OF JOINTS AND BARS
3. CURB AND GUTTER SECTION BEGINS AT STA 310+30.67.
4. SEE D4 DETAIL 630101-D4
5. FOR GORE TRANSITIONS SEE ROADWAY DETAILS - GORE DETAILS.

TYP-10

Michael Baker INTERNATIONAL
200 W Adams Street
Suite 1800
Chicago, IL 60606
PH: 312.707.8770
FAX: 312.707.8804

| | | | |
|---|---|---|---|
| USER NAME = DLamb | DESIGNED - SAS | REVISED - | |
| | DRAWN - DCL | REVISED - | |
| PLOT SCALE = 10.0000 ' / in. | CHECKED - RBB | REVISED - | |
| PLOT DATE = 6/6/2023 | DATE - 6/08/2023 | REVISED - | |

STATE OF ILLINOIS
DEPARTMENT OF TRANSPORTATION

CEDAR ST. (IL-8/IL-116) OVER TZPR & IL-29
PROPOSED TYPICAL SECTIONS – RAMP C

SCALE: SHEET 5 OF 13 SHEETS STA. TO STA.

| F.A.P. RTE. | SECTION | COUNTY | TOTAL SHEETS | SHEET NO. |
|---|---|---|---|---|
| VAR. | 13 (HVB, HB-3) BR-1;R | TAZEWELL | 1173 | 43 |

CONTRACT NO. 68C55
ILLINOIS FED. AID PROJECT

MODEL: Default
FILE NAME: pw:\\mbe-pw.com\Projects\Chicago\ILO1 Projects\179740 IDOT Cedar StExt Phll5.0 CADD\CAD Sheets\D46E65-sht-typical08.dgn

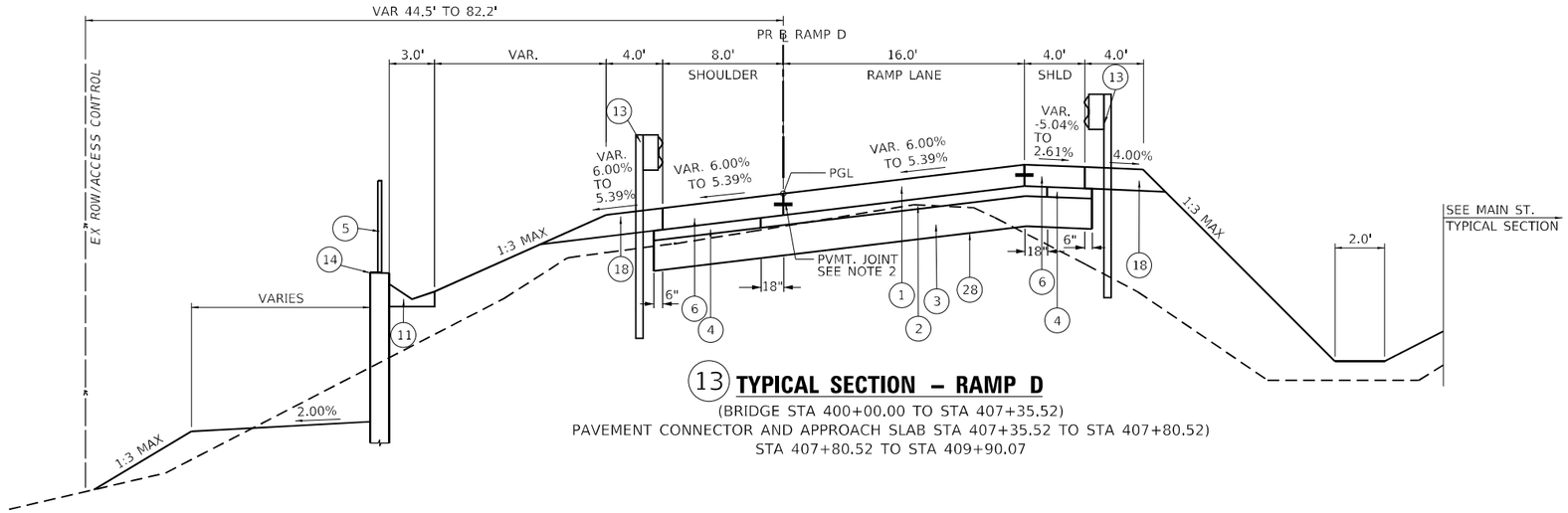


## 13 TYPICAL SECTION – RAMP D

(BRIDGE STA 400+00.00 TO STA 407+35.52)
PAVEMENT CONNECTOR AND APPROACH SLAB STA 407+35.52 TO STA 407+80.52)
STA 407+80.52 TO STA 409+90.07

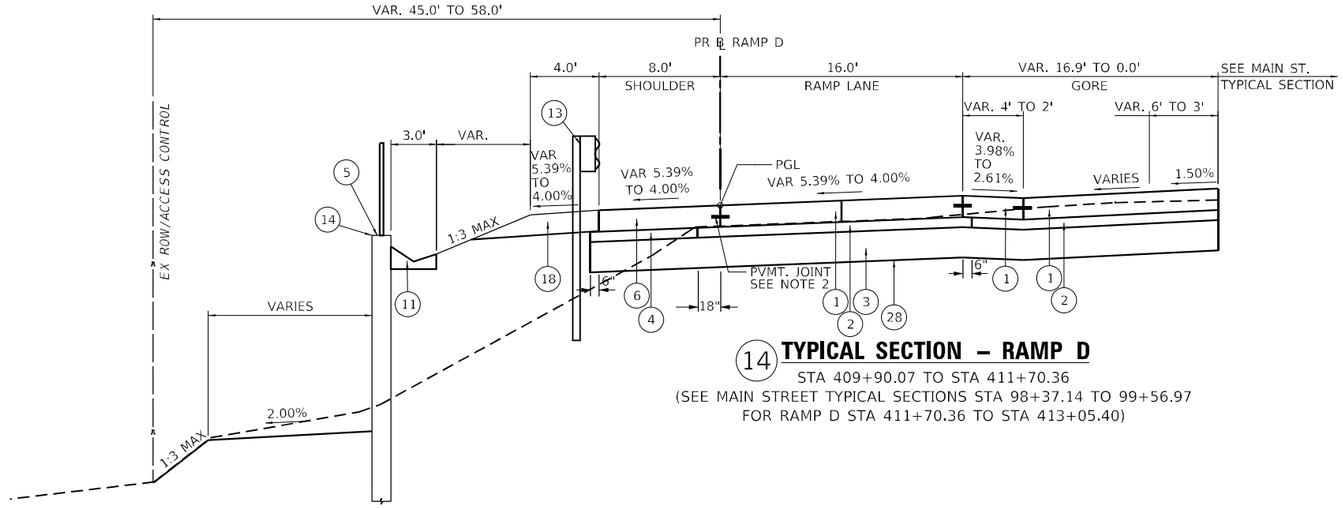


## 14 TYPICAL SECTION – RAMP D

STA 409+90.07 TO STA 411+70.36
(SEE MAIN STREET TYPICAL SECTIONS STA 98+37.14 TO 99+56.97
FOR RAMP D STA 411+70.36 TO STA 413+05.40)

## PROPOSED TYPICAL SECTION LEGEND

1. PORTLAND CEMENT CONCRETE PAVEMENT 9" (JOINTED)
2. STABILIZED SUBBASE 4"
3. AGGREGATE SUBGRADE IMPROVEMENT 12"
4. SUBBASE GRANULAR MATERIAL, TYPE C, VAR. DEPTH
5. CHAIN LINK FENCE, 6' ATTACHED TO STRUCTURE
6. PORTLAND CEMENT CONCRETE SHOULDERS 9"
7. AGGREGATE SHOULDERS, TYPE B 8"
8. COMBINATION CONCRETE CURB AND GUTTER, TYPE B-6.24
9. CONCRETE MEDIAN, TYPE SB-6.12
10. CONCRETE MEDIAN, TYPE SM-6.12
11. CONCRETE GUTTER, TYPE A, (SPECIAL)
12. PORTLAND CEMENT CONCRETE SIDEWALK 4 INCH
13. STEEL PLATE BEAM GUARDRAIL, TYPE A, 6 FOOT POSTS
14. RETAINING WALL (SEE STRUCTURAL PLANS)
15. POLYMERIZED HOT-MIX ASPHALT SURFACE COURSE, IL-9.5, MIX "E", N70, 2"
16. POLYMERIZED HOT-MIX ASPHALT BINDER COURSE, IL-19.0, N70, 6.5"
17. AGGREGATE BASE COURSE, TYPE A 8"
18. GUARDRAIL AGGREGATE EROSION CONTROL
19. PAVED DITCH, TYPE A-15
20. STEEL PLATE BEAM GUARDRAIL, TYPE A, 9 FOOT POSTS
21. CONCRETE MEDIAN SURFACE. 4"
22. POLYMERIZED HOT MIX ASPHALT BINDER COURSE, IL-9.5, N70, 2.25"
23. CHAIN LINK FENCE, 8'
24. PORTLAND CEMENT CONCRETE CURB SIDEWALK 4 INCH (SPEC
25. COMBINATION CONCRETE CURB AND GUTTER TYPE B-6.12
26. POROUS GRANULAR EMBANKMENT
27. HOT-MIX ASPHALT SURFACE COURSE, IL-9.5, MIX "C", N50, 3"
28. GEOTECHNICAL FABRIC FOR GROUND STABILIZATION

## STRUCTURAL PAVEMENT DESIGN INFORMATION

(RAMP D)

STRUCTURAL DESIGN TRAFFIC: YEAR 2042
PV = 4219 SU = 276 MU= 187
ROAD / STREET CLASSIFICATION: CLASS I
PERCENT OF STRUCTURAL DESIGN TRAFFIC IN DESIGN LANE:
P = 100% S = 100% M = 100%
TRAFFIC FACTOR: Actual TF = 3.42
SUBGRADE SUPPORT RATING:
SSR = POOR

## NOTES:

1. FOR SUPERELEVATION TRANSITIONS SEE ROADWAY DETAILS - SUPER ELEVATIONS TRANSITION.
2. SEE PAVEMENT JOINTING PLANS FOR TYPE OF JOINTS AND BARS.
3. FOR GORE TRANSITIONS SEE ROADWAY DETAILS - GORE DETAILS.

TYP-11

MODEL: Default
TILE NAME: pw:\\mb-as-pw.bentley.com:mb-as-pw-03\Documents\Chicago IL\01 Projects\179410 IDOT Cedar Street Phase 3 CADD\CAD-Sheets\D468C55-sht-typ-ill-001.dgn

Michael Baker INTERNATIONAL
200 W Adams Street
Suite 1600
Chicago, IL 60606
PH: 312.707.8770
FAX: 312.707.8804

| | | | |
|---|---|---|---|
| USER NAME = Winson,Teng | DESIGNED - SAS | REVISED - | |
| | DRAWN - DCL | REVISED - | |
| PLOT SCALE = 10.0000 ' / in. | CHECKED - RBB | REVISED - | |
| PLOT DATE = 5/1/2025 | DATE - 4/08/2025 | REVISED - | |

STATE OF ILLINOIS
DEPARTMENT OF TRANSPORTATION

CEDAR ST. (IL-8/IL-116) OVER TZPR & IL-29
PROPOSED TYPICAL SECTIONS – RAMP D

SCALE: SHEET 6 OF 13 SHEETS STA. TO STA.

| F.A.P. RTE. | SECTION | COUNTY | TOTAL SHEETS | SHEET NO. |
|---|---|---|---|---|
| VAR. | 13 (HVB, HB-3) BR-1:R | TAZEWELL | 1173 | 44 |
| | | CONTRACT NO. 68C55 | | |
| | ILLINOIS | FED. AID PROJECT | | |

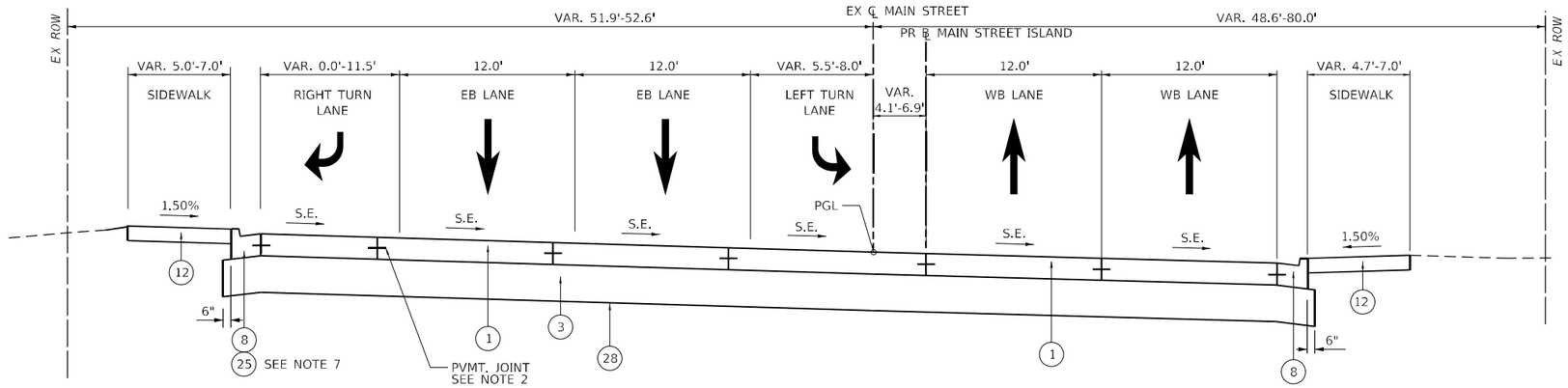


## 15 TYPICAL SECTION – MAIN STREET

STA 96+90.00 TO STA 98+37.14

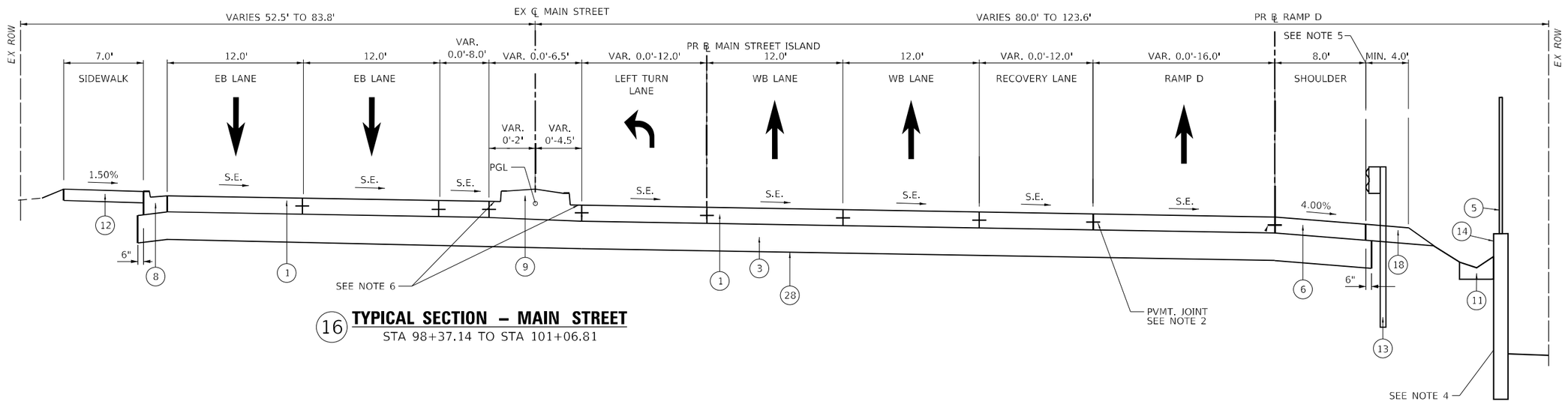


## 16 TYPICAL SECTION – MAIN STREET

STA 98+37.14 TO STA 101+06.81

## PROPOSED TYPICAL SECTION LEGEND

1. PORTLAND CEMENT CONCRETE PAVEMENT 9" (JOINTED)
2. STABILIZED SUBBASE 4"
3. AGGREGATE SUBGRADE IMPROVEMENT 12"
4. SUBBASE GRANULAR MATERIAL, TYPE C, VAR. DEPTH
5. CHAIN LINK FENCE, 6' ATTACHED TO STRUCTURE
6. PORTLAND CEMENT CONCRETE SHOULDERS 9"
7. AGGREGATE SHOULDERS, TYPE B 8"
8. COMBINATION CONCRETE CURB AND GUTTER, TYPE B-6.24
9. CONCRETE MEDIAN, TYPE SB-6.12
10. CONCRETE MEDIAN, TYPE SM-6.12
11. CONCRETE GUTTER, TYPE A, (SPECIAL)
12. PORTLAND CEMENT CONCRETE SIDEWALK 4 INCH
13. STEEL PLATE BEAM GUARDRAIL, TYPE A, 6 FOOT POSTS
14. RETAINING WALL (SEE STRUCTURAL PLANS)
15. POLYMERIZED HOT-MIX ASPHALT SURFACE COURSE, IL-9.5, MIX "E" N70 2"
16. POLYMERIZED HOT-MIX ASPHALT BINDER COURSE, IL-19.0, N70, 6.5"
17. AGGREGATE BASE COURSE, TYPE A 8"
18. GUARDRAIL AGGREGATE EROSION CONTROL
19. PAVED DITCH, TYPE A-15
20. STEEL PLATE BEAM GUARDRAIL, TYPE A, 9 FOOT POSTS
21. CONCRETE MEDIAN SURFACE, 4"
22. POLYMERIZED HOT MIX ASPHALT BINDER COURSE, IL-9.5, N70, 2.25"
23. CHAIN LINK FENCE, 8'
24. PORTLAND CEMENT CONCRETE SIDEWALK 4 INCH (SPECIAL)
25. COMBINATION CONCRETE CURB AND GUTTER TYPE B-6.12
26. POROUS GRANULAR EMBANKMENT
27. HOT-MIX ASPHALT SURFACE COURSE, IL-9.5, MIX "C", N50, 3"
28. GEOTECHNICAL FABRIC FOR GROUND STABILIZATION

## STRUCTURAL PAVEMENT DESIGN INFORMATION

(MAIN ST.)

STRUCTURAL DESIGN TRAFFIC: YEAR 2042
PV = 28795 SU = 1446 MU= 523
ROAD / STREET CLASSIFICATION: CLASS I
PERCENT OF STRUCTURAL DESIGN TRAFFIC IN DESIGN LANE:
P = 32% S = 45% M = 45%
TRAFFIC FACTOR: Actual TF = 5.18
SUBGRADE SUPPORT RATING:
SSR = POOR

## NOTES:

1. FOR SUPERELEVATION TRANSITIONS SEE ROADWAY DETAILS - SUPER ELEVATIONS TRANSITION.
2. SEE PAVEMENT JOINTING PLANS FOR TYPE OF JOINTS AND BARS.
3. FOR GORE TRANSITIONS SEE ROADWAY DETAILS - GORE DETAILS.
4. RETAINING WALL BEGINS STA. 100+24.97
5. COMBINATION CURB AND GUTTER LIMITS STA. 98+57.85 TO 99+19.28
6. MEDIAN GUTTER CROSS SLOPES TO MATCH ADJACENT PAVEMENT CROSS SLOPES
7. GUTTER TRANSITION STA 97+59.90 TO 97+74.19

TYP-12

Michael Baker INTERNATIONAL
200 W Adams Street Suite 1800 Chicago, IL 60606 PH: 312.707.8770 FAX: 312.707.8804

| | | | |
|---|---|---|---|
| USER NAME = Winson,Teng | DESIGNED - SAS | REVISED - | |
| | DRAWN - DCL | REVISED - | |
| PLOT SCALE = 10.0000 ' / in. | CHECKED - RBB | REVISED - | |
| PLOT DATE = 5/1/2025 | DATE - 4/08/2025 | REVISED - | |

STATE OF ILLINOIS
DEPARTMENT OF TRANSPORTATION

CEDAR ST. (IL-84/IL-116) OVER TZPR & IL-29
PROPOSED TYPICAL SECTIONS – MAIN ST.

SCALE: NO SCALE | SHEET 7 OF 13 SHEETS | STA. TO STA.

| F.A.P. RTE. | SECTION | COUNTY | TOTAL SHEETS | SHEET NO. |
|---|---|---|---|---|
| VAR. | 13 (HVB, HB-3) BR-1:R | TAZEWELL | 1173 | 45 |
| | | CONTRACT NO. 68C55 | | |
| | ILLINOIS | FED. AID PROJECT | | |

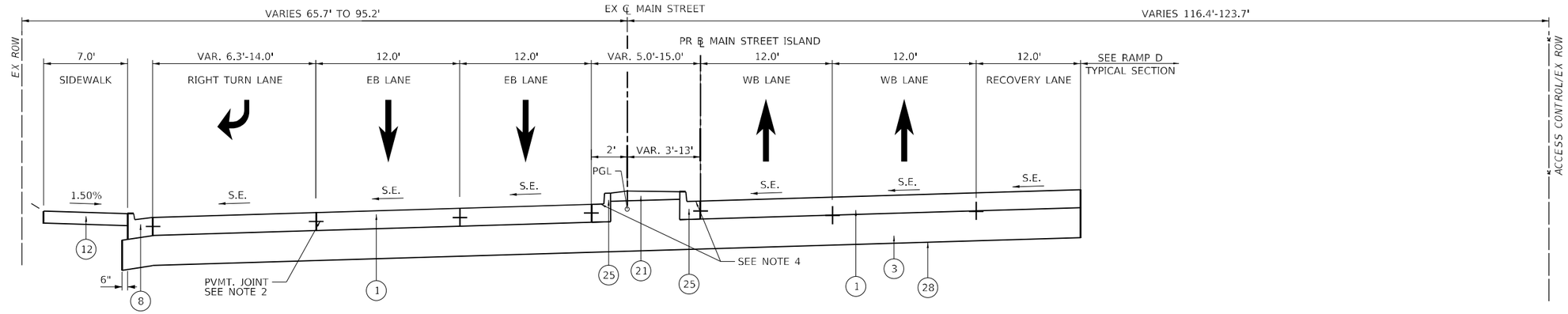


## 17 TYPICAL SECTION – MAIN STREET

STA 101+06.81 TO STA 102+87.11

SEE RAMP D TYPICALS (STA 409+90.07 TO STA 411+70.36)

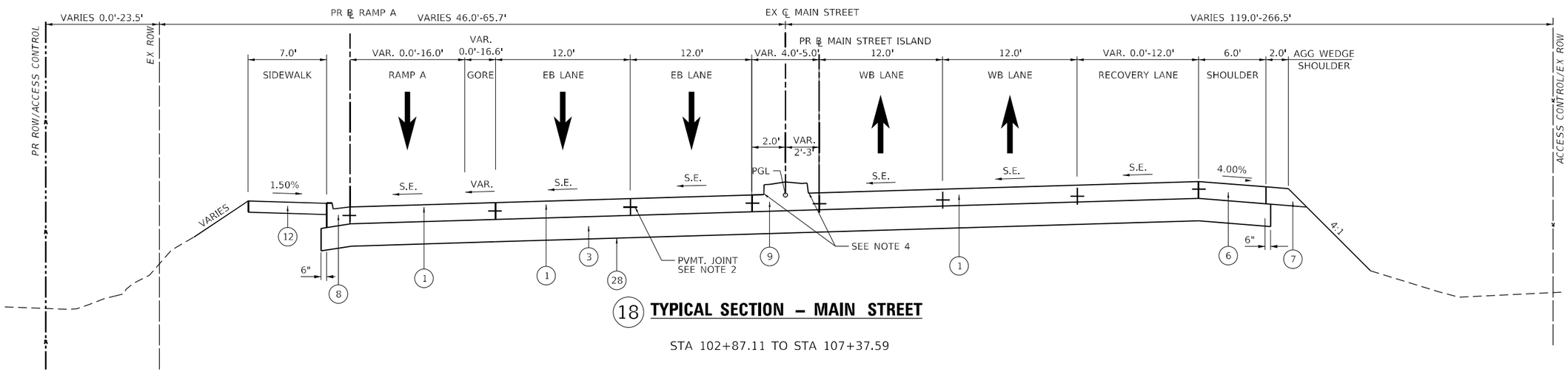


## 18 TYPICAL SECTION – MAIN STREET

STA 102+87.11 TO STA 107+37.59

## PROPOSED TYPICAL SECTION LEGEND

1. PORTLAND CEMENT CONCRETE PAVEMENT 9" (JOINTED)
2. STABILIZED SUBBASE 4"
3. AGGREGATE SUBGRADE IMPROVEMENT 12"
4. SUBBASE GRANULAR MATERIAL, TYPE C, VAR. DEPTH
5. CHAIN LINK FENCE, 6' ATTACHED TO STRUCTURE
6. PORTLAND CEMENT CONCRETE SHOULDERS 9"
7. AGGREGATE SHOULDERS, TYPE B 8"
8. COMBINATION CONCRETE CURB AND GUTTER, TYPE B-6.24
9. CONCRETE MEDIAN, TYPE SB-6.12
10. CONCRETE MEDIAN, TYPE SM-6.12
11. CONCRETE GUTTER, TYPE A, (SPECIAL)
12. PORTLAND CEMENT CONCRETE SIDEWALK 4 INCH
13. STEEL PLATE BEAM GUARDRAIL, TYPE A, 6 FOOT POSTS
14. RETAINING WALL (SEE STRUCTURAL PLANS)
15. POLYMERIZED HOT-MIX ASPHALT SURFACE COURSE, IL-9.5, MIX "E" N70 2"
16. POLYMERIZED HOT-MIX ASPHALT BINDER COURSE, IL-19.0, N70, 6.5"
17. AGGREGATE BASE COURSE, TYPE A 8"
18. GUARDRAIL AGGREGATE EROSION CONTROL
19. PAVED DITCH, TYPE A-15
20. STEEL PLATE BEAM GUARDRAIL, TYPE A, 9 FOOT POSTS
21. CONCRETE MEDIAN SURFACE. 4"
22. POLYMERIZED HOT MIX ASPHALT BINDER COURSE, IL-9.5, N70, 2.25"
23. CHAIN LINK FENCE, 8'
24. PORTLAND CEMENT CONCRETE SIDEWALK 4 INCH (SPECIAL)
25. COMBINATION CONCRETE CURB AND GUTTER TYPE B-6.12
26. POROUS GRANULAR EMBANKMENT
27. HOT-MIX ASPHALT SURFACE COURSE, IL-9.5, MIX "C", N50, 3"
28. GEOTECHNICAL FABRIC FOR GROUND STABILIZATION

## STRUCTURAL PAVEMENT DESIGN INFORMATION

(MAIN ST.)

STRUCTURAL DESIGN TRAFFIC: YEAR 2042
PV = 28795 SU = 1446 MU= 523
ROAD / STREET CLASSIFICATION: CLASS I
PERCENT OF STRUCTURAL DESIGN TRAFFIC IN DESIGN LANE:
P = 32% S = 45% M = 45%
TRAFFIC FACTOR: Actual TF = 5.18
SUBGRADE SUPPORT RATING:
SSR = POOR

## NOTES:

1. FOR SUPERELEVATION TRANSITIONS SEE ROADWAY DETAILS - SUPER ELEVATIONS TRANSITION.
2. SEE PAVEMENT JOINTING PLANS FOR TYPE OF JOINTS AND BARS
3. FOR GORE TRANSITIONS SEE ROADWAY DETAILS - GORE DETAILS.
4. MEDIAN GUTTER CROSS SLOPES TO MATCH ADJACENT PAVEMENT CROSS SLOPES

TYP-13

MODEL: Default
TILE NAME: pw:\\mb-a-pw.bentley.com:mb-a-pw-02\Documents\Chicago-IL\01_Projects\179710 IDOT Cedar St\Ex Phase 0 CAD\CAD Sheets\D468C55-sht-typ8.dgn

Michael Baker INTERNATIONAL
200 W Adams Street
Suite 1800
Chicago, IL 60606
PH: 312.707.8770
FAX: 312.707.8804

| | | | |
|---|---|---|---|
| USER NAME = DLamb | DESIGNED - SAS | REVISED - | |
| | DRAWN - DCL | REVISED - | |
| PLOT SCALE = 10.0000 ' / in. | CHECKED - RBB | REVISED - | |
| PLOT DATE = 6/6/2023 | DATE - 6/08/2023 | REVISED - | |

**STATE OF ILLINOIS**
**DEPARTMENT OF TRANSPORTATION**

**CEDAR ST. (IL-8/IL-116) OVER TZPR & IL-29**
**PROPOSED TYPICAL SECTIONS – MAIN ST.**

SCALE: NO SCALE | SHEET 8 OF 13 SHEETS | STA. TO STA.

| F.A.P. RTE. | SECTION | COUNTY | TOTAL SHEETS | SHEET NO. |
|---|---|---|---|---|
| VAR. | 13 (HVB, HB-3) BR-1;R | TAZEWELL | 1173 | 46 |
| | | CONTRACT NO. 68C55 | | |
| | | ILLINOIS FED. AID PROJECT | | |

*NOTE :*

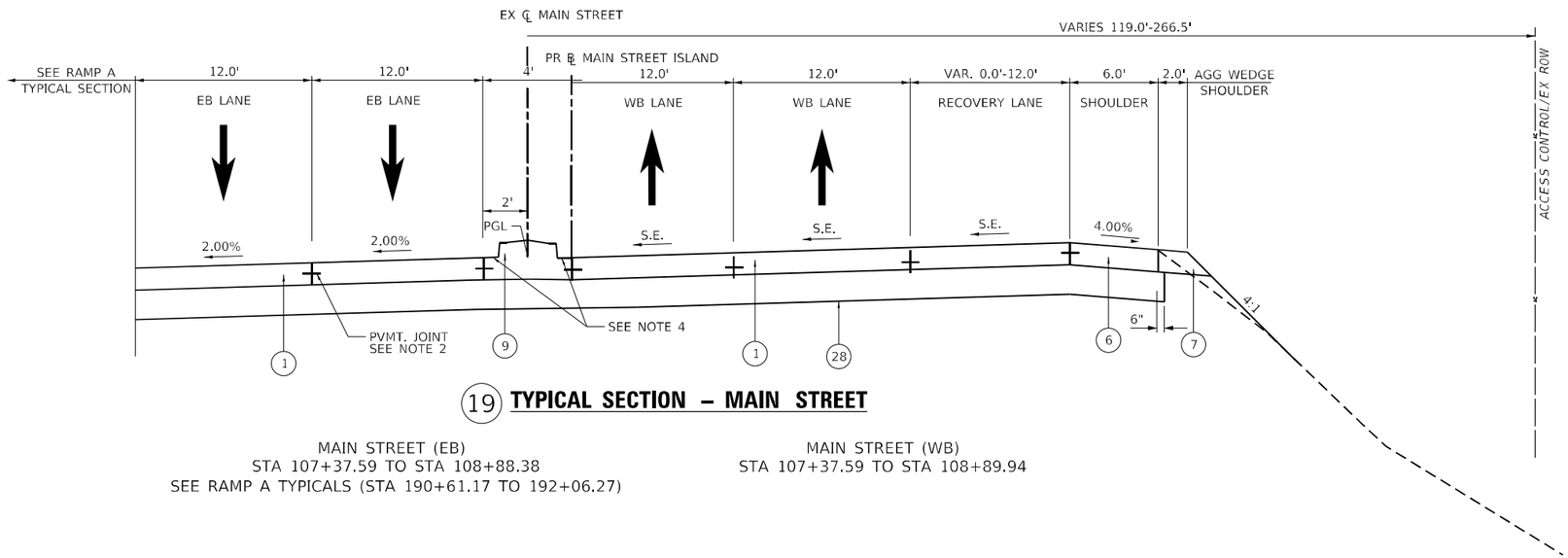


## (19) TYPICAL SECTION – MAIN STREET

MAIN STREET (EB)
STA 107+37.59 TO STA 108+88.38
SEE RAMP A TYPICALS (STA 190+61.17 TO 192+06.27)

MAIN STREET (WB)
STA 107+37.59 TO STA 108+89.94

## PROPOSED TYPICAL SECTION LEGEND

1. PORTLAND CEMENT CONCRETE PAVEMENT 9" (JOINTED)
2. STABILIZED SUBBASE 4"
3. AGGREGATE SUBGRADE IMPROVEMENT 12"
4. SUBBASE GRANULAR MATERIAL, TYPE C, VAR. DEPTH
5. CHAIN LINK FENCE, 6' ATTACHED TO STRUCTURE
6. PORTLAND CEMENT CONCRETE SHOULDERS 9"
7. AGGREGATE SHOULDERS, TYPE B 8"
8. COMBINATION CONCRETE CURB AND GUTTER, TYPE B-6.24
9. CONCRETE MEDIAN, TYPE SB-6.12
10. CONCRETE MEDIAN, TYPE SM-6.12
11. CONCRETE GUTTER, TYPE A, (SPECIAL)
12. PORTLAND CEMENT CONCRETE SIDEWALK 4 INCH
13. STEEL PLATE BEAM GUARDRAIL, TYPE A, 6 FOOT POSTS
14. RETAINING WALL (SEE STRUCTURAL PLANS)
15. POLYMERIZED HOT-MIX ASPHALT SURFACE COURSE, IL-9.5, MIX "E" N70 2"
16. POLYMERIZED HOT-MIX ASPHALT BINDER COURSE, IL-19.0, N70, 6.5"
17. AGGREGATE BASE COURSE, TYPE A 8"
18. GUARDRAIL AGGREGATE EROSION CONTROL
19. PAVED DITCH, TYPE A-15
20. STEEL PLATE BEAM GUARDRAIL, TYPE A, 9 FOOT POSTS
21. CONCRETE MEDIAN SURFACE. 4"
22. POLYMERIZED HOT MIX ASPHALT BINDER COURSE, IL-9.5, N70, 2.25"
23. CHAIN LINK FENCE, 8'
24. PORTLAND CEMENT CONCRETE SIDEWALK 4 INCH (SPECIAL)
25. COMBINATION CONCRETE CURB AND GUTTER TYPE B-6.12
26. POROUS GRANULAR EMBANKMENT
27. HOT-MIX ASPHALT SURFACE COURSE, IL-9.5, MIX "C", N50, 3"
28. GEOTECHNICAL FABRIC FOR GROUND STABILIZATION

## STRUCTURAL PAVEMENT DESIGN INFORMATION

(MAIN ST.)

STRUCTURAL DESIGN TRAFFIC: YEAR 2042
PV = 28795 SU = 1446 MU= 523
ROAD / STREET CLASSIFICATION: CLASS I
PERCENT OF STRUCTURAL DESIGN TRAFFIC IN DESIGN LANE:
P = 32% S = 45% M = 45%
TRAFFIC FACTOR: Actual TF = 5.18
SUBGRADE SUPPORT RATING:
SSR = POOR

## NOTES:

1. FOR SUPERELEVATION TRANSITIONS SEE ROADWAY DETAILS - SUPER ELEVATIONS TRANSITION.
2. SEE PAVEMENT JOINTING PLANS FOR TYPE OF JOINTS AND BARS
3. FOR GORE TRANSITIONS SEE ROADWAY DETAILS - GORE DETAILS.
4. MEDIAN GUTTER CROSS SLOPES TO MATCH ADJACENT PAVEMENT CROSS SLOPES

TYP-14

Michael Baker INTERNATIONAL
200 W Adams Street
Suite 1800
Chicago, IL 60606
PH: 312.707.8770
FAX: 312.707.8804

| | | | |
|---|---|---|---|
| USER NAME = DLamb | DESIGNED - SAS | REVISED - | |
| | DRAWN - DCL | REVISED - | |
| PLOT SCALE = 10.0000 ' / in. | CHECKED - RBB | REVISED - | |
| PLOT DATE = 6/6/2023 | DATE - 6/08/2023 | REVISED - | |

STATE OF ILLINOIS
DEPARTMENT OF TRANSPORTATION

CEDAR ST. (IL-8/IL-116) OVER TZPR & IL-29
PROPOSED TYPICAL SECTIONS – MAIN ST

SCALE: NO SCALE | SHEET 9 OF 13 SHEETS | STA. TO STA.

| F.A.P. RTE. | SECTION | COUNTY | TOTAL SHEETS | SHEET NO. |
|---|---|---|---|---|
| VAR. | 13 (HVB, HB-3) BR-1:R | TAZEWELL | 1173 | 47 |
| | | CONTRACT NO. 68C55 | | |
| | | ILLINOIS FED. AID PROJECT | | |

MODEL: Default
FILE NAME: pw:\\mbe-as-pw.bentley.com:mb-as-pw-03\Documents\Chicago-IL\01_Projects\179410 IDOT Cedar Street Phase 3.0 CADD\CAD Sheets\D468C55-sht-typical11.dgn

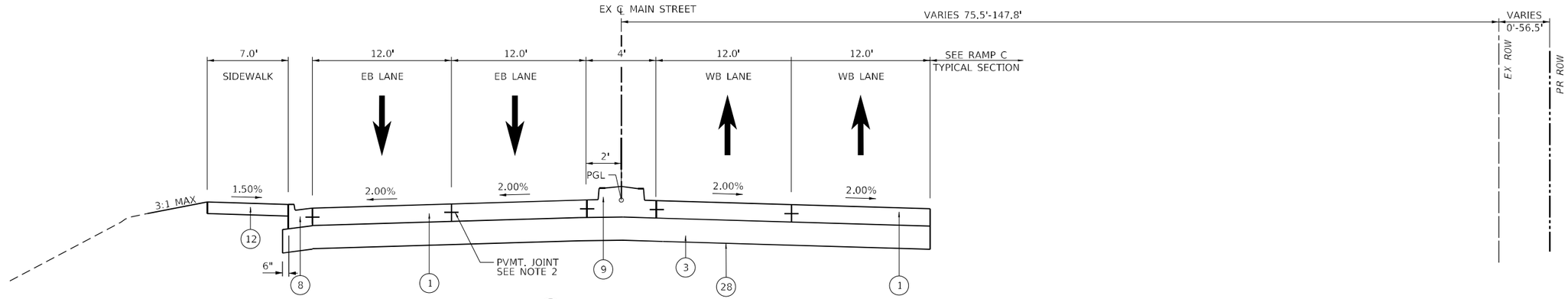


## 20 TYPICAL SECTION – MAIN STREET

MAIN STREET (EB)
STA 108+88.38 TO STA 112+14.42

MAIN STREET (WB)
STA 108+89.94 TO STA 112+76.37
SEE RAMP C TYPICALS (STA 310+59.18 TO STA 312+55.45)

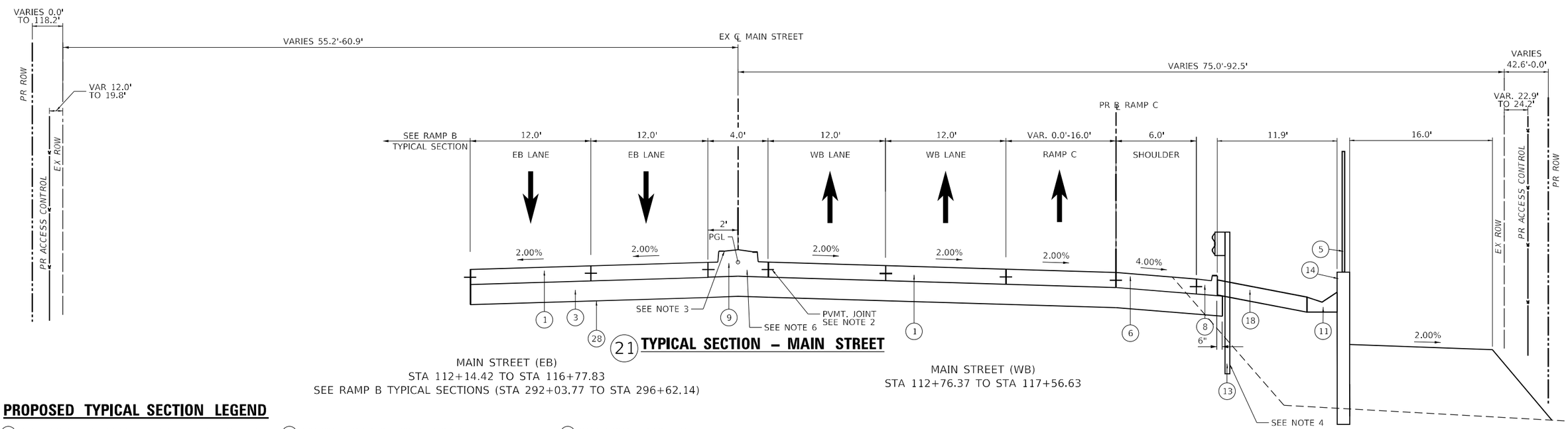


## 21 TYPICAL SECTION – MAIN STREET

MAIN STREET (EB)
STA 112+14.42 TO STA 116+77.83
SEE RAMP B TYPICAL SECTIONS (STA 292+03.77 TO STA 296+62.14)

MAIN STREET (WB)
STA 112+76.37 TO STA 117+56.63

## PROPOSED TYPICAL SECTION LEGEND

1. PORTLAND CEMENT CONCRETE PAVEMENT 9" (JOINTED)
2. STABILIZED SUBBASE 4"
3. AGGREGATE SUBGRADE IMPROVEMENT 12"
4. SUBBASE GRANULAR MATERIAL, TYPE C, VAR. DEPTH
5. CHAIN LINK FENCE, 6' ATTACHED TO STRUCTURE
6. PORTLAND CEMENT CONCRETE SHOULDERS 9"
7. AGGREGATE SHOULDERS, TYPE B 8"
8. COMBINATION CONCRETE CURB AND GUTTER, TYPE B-6.24
9. CONCRETE MEDIAN, TYPE SB-6.12
10. CONCRETE MEDIAN, TYPE SM-6.12
11. CONCRETE GUTTER, TYPE A, (SPECIAL)
12. PORTLAND CEMENT CONCRETE SIDEWALK 4 INCH
13. STEEL PLATE BEAM GUARDRAIL, TYPE A, 6 FOOT POSTS
14. RETAINING WALL (SEE STRUCTURAL PLANS)
15. POLYMERIZED HOT-MIX ASPHALT SURFACE COURSE, IL-9.5, MIX "E" N70 2"
16. POLYMERIZED HOT-MIX ASPHALT BINDER COURSE, IL-19.0, N70, 6.5"
17. AGGREGATE BASE COURSE, TYPE A 8"
18. GUARDRAIL AGGREGATE EROSION CONTROL
19. PAVED DITCH, TYPE A-15
20. STEEL PLATE BEAM GUARDRAIL, TYPE A, 9 FOOT POSTS
21. CONCRETE MEDIAN SURFACE. 4"
22. POLYMERIZED HOT MIX ASPHALT BINDER COURSE, IL-9.5, N70, 2.25"
23. CHAIN LINK FENCE, 8'
24. PORTLAND CEMENT CONCRETE SIDEWALK 4 INCH (SPECIAL)
25. COMBINATION CONCRETE CURB AND GUTTER TYPE B-6.12
26. POROUS GRANULAR EMBANKMENT
27. HOT-MIX ASPHALT SURFACE COURSE, IL-9.5, MIX "C", N50, 3"
28. GEOTECHNICAL FABRIC FOR GROUND STABILIZATION

## STRUCTURAL PAVEMENT DESIGN INFORMATION

(MAIN ST.)

STRUCTURAL DESIGN TRAFFIC: YEAR 2042
PV = 28795 SU = 1446 MU= 523
ROAD / STREET CLASSIFICATION: CLASS I
PERCENT OF STRUCTURAL DESIGN TRAFFIC IN DESIGN LANE:
P = 32% S = 45% M = 45%
TRAFFIC FACTOR: Actual TF = 5.18
SUBGRADE SUPPORT RATING:
SSR = POOR

## NOTES:

1. FOR SUPERELEVATION TRANSITIONS SEE ROADWAY DETAILS - SUPER ELEVATIONS TRANSITION.
2. SEE PAVEMENT JOINTING PLANS FOR TYPE OF JOINTS AND BARS
3. CONCRETE MEDIAN STOPS AT STA. 116+97.30.
4. GUARDRAIL STOPS AT STA. 114+59.97.
5. FOR GORE TRANSITIONS SEE ROADWAY DETAILS - GORE DETAILS.
6. MEDIAN GUTTER CROSS SLOPES TO MATCH ADJACENT PAVEMENT CROSS SLOPES

TYP-15

MODEL: Default
FILE NAME: pw:\\mb-as-pw.bentley.com:mb-aspw-03\Documents\Chicago (LJV) Projects\179740 IDOT Cedar St\Ext Phase 0 CADD\CAD Sheets\D46BC5-sht-typical1a.dgn

Michael Baker INTERNATIONAL
200 W Adams Street
Suite 1800
Chicago, IL 60606
PH: 312.707.2770
FAX: 312.707.8804

| | | | |
|---|---|---|---|
| USER NAME = DLamb | DESIGNED - SAS | REVISED - | |
| | DRAWN - DCL | REVISED - | |
| PLOT SCALE = 10.0000 ' / in. | CHECKED - RBB | REVISED - | |
| PLOT DATE = 6/6/2023 | DATE - 6/08/2023 | REVISED - | |

STATE OF ILLINOIS
DEPARTMENT OF TRANSPORTATION

CEDAR ST. (IL-8/IL-116) OVER TZPR & IL-29
PROPOSED TYPICAL SECTIONS – MAIN ST

SCALE: NO SCALE | SHEET 10 OF 13 SHEETS | STA. TO STA.

| F.A.P. RTE. | SECTION | COUNTY | TOTAL SHEETS | SHEET NO. |
|---|---|---|---|---|
| VAR. | 13 (HVB, HB-3) BR-1:R | TAZEWELL | 1173 | 48 |
| | | CONTRACT NO. 68C55 | | |
| | | ILLINOIS | FED. AID PROJECT | |

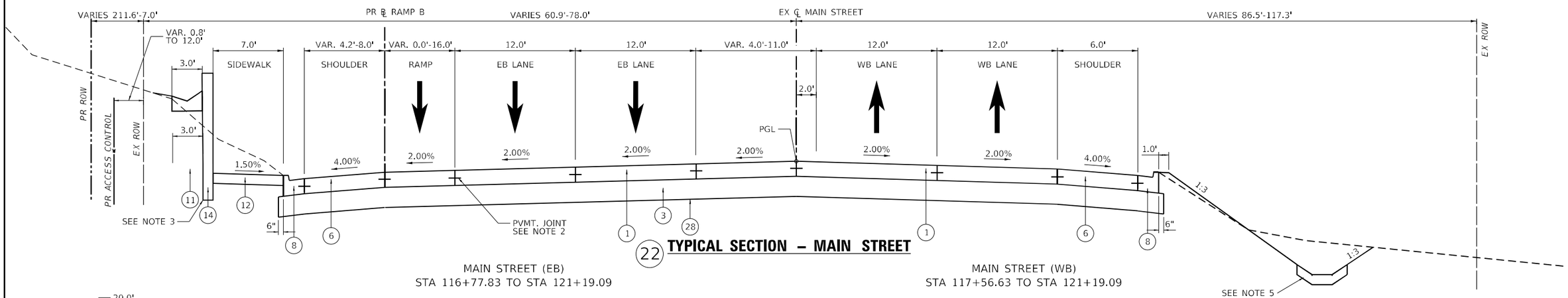


## 22 TYPICAL SECTION – MAIN STREET

MAIN STREET (EB)
STA 116+77.83 TO STA 121+19.09

MAIN STREET (WB)
STA 117+56.63 TO STA 121+19.09

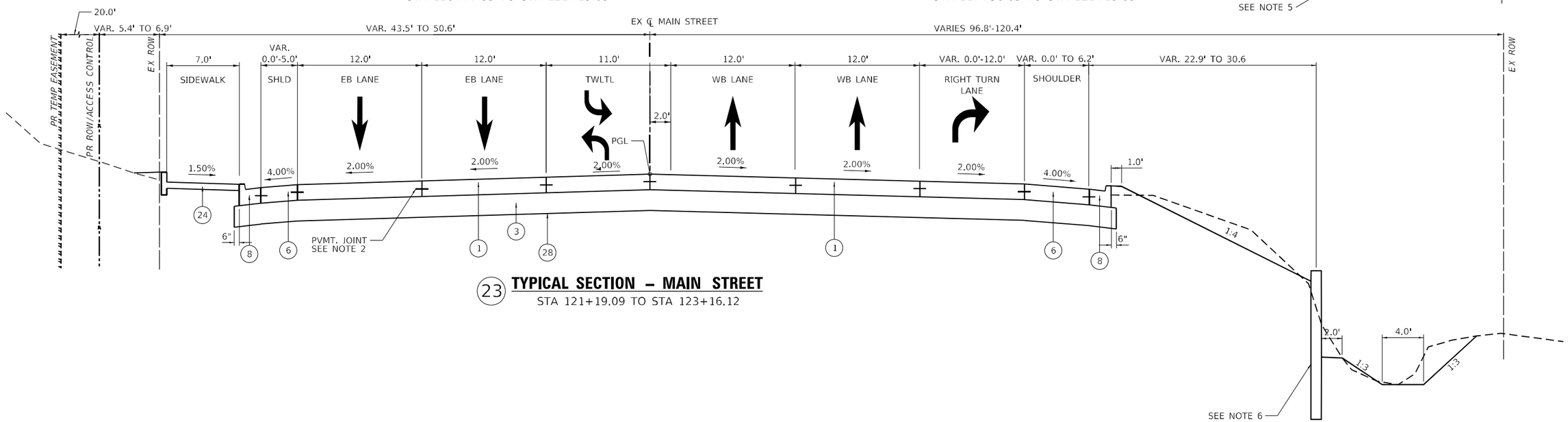


## 23 TYPICAL SECTION – MAIN STREET

STA 121+19.09 TO STA 123+16.12

## PROPOSED TYPICAL SECTION LEGEND

1. PORTLAND CEMENT CONCRETE PAVEMENT 9" (JOINTED)
2. STABILIZED SUBBASE 4"
3. AGGREGATE SUBGRADE IMPROVEMENT 12"
4. SUBBASE GRANULAR MATERIAL, TYPE C, VAR. DEPTH
5. CHAIN LINK FENCE, 6' ATTACHED TO STRUCTURE
6. PORTLAND CEMENT CONCRETE SHOULDERS 9"
7. AGGREGATE SHOULDERS, TYPE B 8"
8. COMBINATION CONCRETE CURB AND GUTTER, TYPE B-6.24
9. CONCRETE MEDIAN, TYPE SB-6.12
10. CONCRETE MEDIAN, TYPE SM-6.12
11. CONCRETE GUTTER, TYPE A, (SPECIAL)
12. PORTLAND CEMENT CONCRETE SIDEWALK 4 INCH
13. STEEL PLATE BEAM GUARDRAIL, TYPE A, 6 FOOT POSTS
14. RETAINING WALL (SEE STRUCTURAL PLANS)
15. POLYMERIZED HOT-MIX ASPHALT SURFACE COURSE, IL-9.5, MIX "E" N70 2"
16. POLYMERIZED HOT-MIX ASPHALT BINDER COURSE, IL-19.0, N70, 6.5"
17. AGGREGATE BASE COURSE, TYPE A 8"
18. GUARDRAIL AGGREGATE EROSION CONTROL
19. PAVED DITCH, TYPE A-15
20. STEEL PLATE BEAM GUARDRAIL, TYPE A, 9 FOOT POSTS
21. CONCRETE MEDIAN SURFACE. 4"
22. POLYMERIZED HOT MIX ASPHALT BINDER COURSE, IL-9.5, N70, 2.25"
23. CHAIN LINK FENCE, 8'
24. PORTLAND CEMENT CONCRETE SIDEWALK 4 INCH (SPECIAL)
25. COMBINATION CONCRETE CURB AND GUTTER TYPE B-6.12
26. POROUS GRANULAR EMBANKMENT
27. HOT-MIX ASPHALT SURFACE COURSE, IL-9.5, MIX "C", N50, 3"
28. GEOTECHNICAL FABRIC FOR GROUND STABILIZATION

## STRUCTURAL PAVEMENT DESIGN INFORMATION

(MAIN ST.)

STRUCTURAL DESIGN TRAFFIC: YEAR 2042
PV = 28795 SU = 1446 MU= 523
ROAD / STREET CLASSIFICATION: CLASS I
PERCENT OF STRUCTURAL DESIGN TRAFFIC IN DESIGN LANE:
P = 32% S = 45% M = 45%
TRAFFIC FACTOR: Actual TF = 5.18
SUBGRADE SUPPORT RATING:
SSR = POOR

## NOTES:

1. FOR SUPERELEVATION TRANSITIONS SEE ROADWAY DETAILS - SUPER ELEVATIONS TRANSITION.
2. SEE PAVEMENT JOINTING PLANS FOR TYPE OF JOINTS AND BARS
3. RETAINING WALL STOPS AT STA. 121+19.40.
4. FOR GORE TRANSITIONS SEE ROADWAY DETAILS - GORE DETAILS.
5. SEE GRADING PLANS AND PROPOSED DRAINAGE PLANS FOR DITCH LIMITS
6. SHEETIPILING FROM STA. 122+42.50 TO 123+56.70

TYP-16

Michael Baker INTERNATIONAL
200 W Adams Street
Suite 1800
Chicago, IL 60606
PH: 312.707.8770
FAX: 312.707.8804

| | | | |
|---|---|---|---|
| USER NAME = DLamb | DESIGNED - SAS | REVISED - | STATE OF ILLINOIS DEPARTMENT OF TRANSPORTATION |
| | DRAWN - DCL | REVISED - | |
| PLOT SCALE = 10.0000 ' / in. | CHECKED - RBB | REVISED - | |
| PLOT DATE = 6/6/2023 | DATE - 6/08/2023 | REVISED - | |

CEDAR ST. (IL-8/IL-116) OVER TZPR & IL-29
PROPOSED TYPICAL SECTIONS – MAIN ST.

SCALE: NO SCALE | SHEET 11 OF 13 SHEETS | STA. TO STA.

| F.A.P. RTE. | SECTION | COUNTY | TOTAL SHEETS | SHEET NO. |
|---|---|---|---|---|
| VAR. | 13 (HVB, HB-3) BR-1:R | TAZEWELL | 1173 | 49 |
| | | CONTRACT NO. 68C55 | | |

ILLINOIS FED. AID PROJECT

MODEL: Default
FILE NAME: pw:\\mb-a-pw.bentley.com:mb-a-pw-pw01\Documents\Chicago-IL\01_Projects\179710 IDOT Cedar Street Phillis\0 CADD\CAD Sheets\D468C55-sht-typical12.dgn

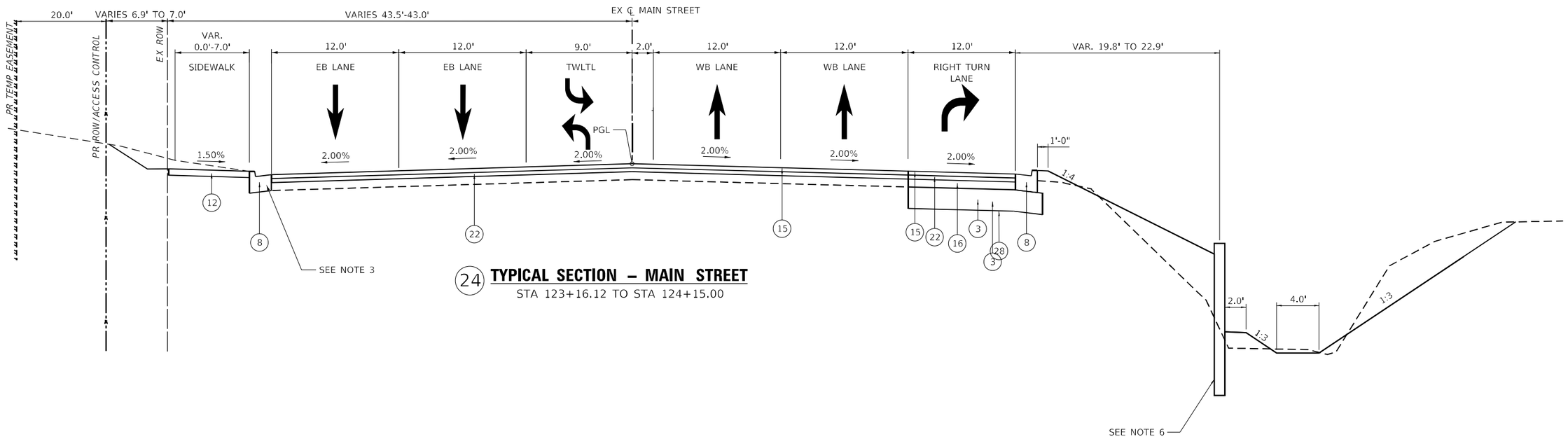


## 24 TYPICAL SECTION – MAIN STREET

STA 123+16.12 TO STA 124+15.00

## PROPOSED TYPICAL SECTION LEGEND

1. PORTLAND CEMENT CONCRETE PAVEMENT 9" (JOINTED)
2. STABILIZED SUBBASE 4"
3. AGGREGATE SUBGRADE IMPROVEMENT 12"
4. SUBBASE GRANULAR MATERIAL, TYPE C, VAR. DEPTH
5. CHAIN LINK FENCE, 6' ATTACHED TO STRUCTURE
6. PORTLAND CEMENT CONCRETE SHOULDERS 9"
7. AGGREGATE SHOULDERS, TYPE B 8"
8. COMBINATION CONCRETE CURB AND GUTTER, TYPE B-6.24
9. CONCRETE MEDIAN, TYPE SB-6.12
10. CONCRETE MEDIAN, TYPE SM-6.12
11. CONCRETE GUTTER, TYPE A, (SPECIAL)
12. PORTLAND CEMENT CONCRETE SIDEWALK 4 INCH
13. STEEL PLATE BEAM GUARDRAIL, TYPE A, 6 FOOT POSTS
14. RETAINING WALL (SEE STRUCTURAL PLANS)
15. POLYMERIZED HOT-MIX ASPHALT SURFACE COURSE, IL-9.5, MIX "E" N70 2"
16. POLYMERIZED HOT-MIX ASPHALT BINDER COURSE, IL-19.0, N70, 6.5"
17. AGGREGATE BASE COURSE, TYPE A 8"
18. GUARDRAIL AGGREGATE EROSION CONTROL
19. PAVED DITCH, TYPE A-15
20. STEEL PLATE BEAM GUARDRAIL, TYPE A, 9 FOOT POSTS
21. CONCRETE MEDIAN SURFACE. 4"
22. POLYMERIZED HOT MIX ASPHALT BINDER COURSE, IL-9.5, N70, 2.25"
23. CHAIN LINK FENCE, 8'
24. PORTLAND CEMENT CONCRETE SIDEWALK 4 INCH (SPECIAL)
25. COMBINATION CONCRETE CURB AND GUTTER TYPE B-6.12
26. POROUS GRANULAR EMBANKMENT
27. HOT-MIX ASPHALT SURFACE COURSE, IL-9.5, MIX "C", N50, 3"
28. GEOTECHNICAL FABRIC FOR GROUND STABILIZATION

## STRUCTURAL PAVEMENT DESIGN INFORMATION

(MAIN ST.)

STRUCTURAL DESIGN TRAFFIC: YEAR 2042
PV = 28795 SU = 1446 MU= 523
ROAD / STREET CLASSIFICATION: CLASS I
PERCENT OF STRUCTURAL DESIGN TRAFFIC IN DESIGN LANE:
P = 32% S = 45% M = 45%
TRAFFIC FACTOR: Actual TF = 5.18
SUBGRADE SUPPORT RATING:
SSR = POOR

## NOTES:

1. FOR SUPERELEVATION TRANSITIONS SEE ROADWAY DETAILS - SUPER ELEVATIONS TRANSITION.
2. SEE PAVEMENT JOINTING PLANS FOR TYPE OF JOINTS AND BARS
3. COMBINATION CURB AND GUTTER SECTION ENDS AT STA 123+33.99.
4. FOR GORE TRANSITIONS SEE ROADWAY DETAILS - GORE DETAILS.
5. SHEETPILING FROM STA. 122+42.50 TO 123+56.70

TYP-17

Michael Baker INTERNATIONAL
200 W Adams Street
Suite 1800
Chicago, IL 60606
PH: 312.707.6770
FAX: 312.707.8804

| | | | |
|---|---|---|---|
| USER NAME = DLamb | DESIGNED - SAS | REVISED - | |
| | DRAWN - DCL | REVISED - | |
| PLOT SCALE = 10.0000 ' / in. | CHECKED - RBB | REVISED - | |
| PLOT DATE = 6/6/2023 | DATE - 6/08/2023 | REVISED - | |

STATE OF ILLINOIS
DEPARTMENT OF TRANSPORTATION

CEDAR ST. (IL-8/IL-116) OVER TZPR & IL-29
PROPOSED TYPICAL SECTIONS – MAIN ST.

SCALE: NO SCALE | SHEET 12 OF 13 SHEETS | STA. TO STA.

| F.A.P. RTE. | SECTION | COUNTY | TOTAL SHEETS | SHEET NO. |
|---|---|---|---|---|
| VAR. | 13 (HVB, HB-3) BR-1;R | TAZEWELL | 1173 | 50 |
| | | CONTRACT NO. 68C55 | | |
| | ILLINOIS | FED. AID PROJECT | | |

MODEL: Default
FILE NAME: pw:\\mb-as-pw.mbi\ilx\contrib-asset03\Documents\Civil\aip_IL01_Projects\179710 IDOT Cedar StExt Phl15.0 CADD\CAD Sheets\D468C55-sht-typical13.dgn

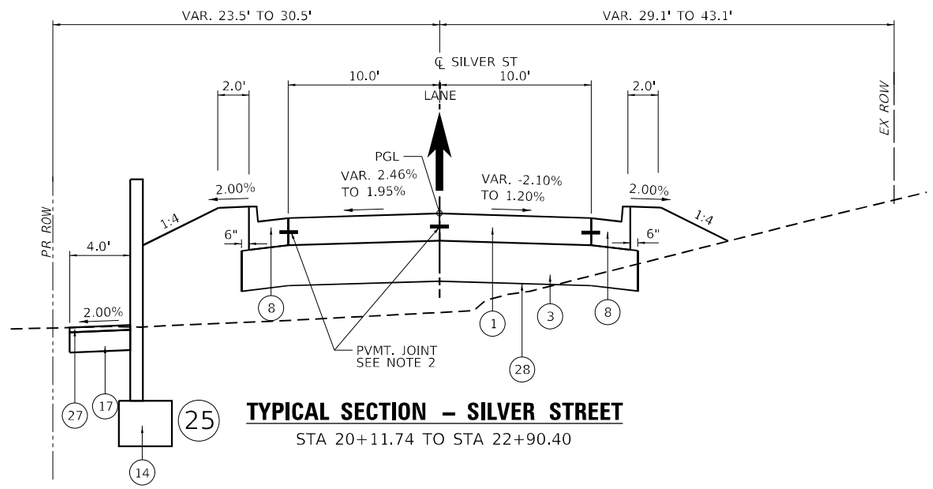


## TYPICAL SECTION – SILVER STREET

STA 20+11.74 TO STA 22+90.40

## PROPOSED TYPICAL SECTION LEGEND

1. PORTLAND CEMENT CONCRETE PAVEMENT 9" (JOINTED)
2. STABILIZED SUBBASE 4"
3. AGGREGATE SUBGRADE IMPROVEMENT 12"
4. SUBBASE GRANULAR MATERIAL, TYPE C, VAR. DEPTH
5. CHAIN LINK FENCE, 6' ATTACHED TO STRUCTURE
6. PORTLAND CEMENT CONCRETE SHOULDERS 9"
7. AGGREGATE SHOULDERS, TYPE B 8"
8. COMBINATION CONCRETE CURB AND GUTTER, TYPE B-6.24
9. CONCRETE MEDIAN, TYPE SB-6.12
10. CONCRETE MEDIAN, TYPE SM-6.12
11. CONCRETE GUTTER, TYPE A, (SPECIAL)
12. PORTLAND CEMENT CONCRETE SIDEWALK 4 INCH
13. STEEL PLATE BEAM GUARDRAIL, TYPE A, 6 FOOT POSTS
14. RETAINING WALL (SEE STRUCTURAL PLANS)
15. POLYMERIZED HOT-MIX ASPHALT SURFACE COURSE, IL-9.5, MIX "E", N70, 2"
16. POLYMERIZED HOT-MIX ASPHALT BINDER COURSE, IL-19.0, N70, 6.5"
17. AGGREGATE BASE COURSE, TYPE A 8"
18. GUARDRAIL AGGREGATE EROSION CONTROL
19. PAVED DITCH, TYPE A-15
20. STEEL PLATE BEAM GUARDRAIL, TYPE A, 9 FOOT POSTS
21. CONCRETE MEDIAN SURFACE. 4"
22. POLYMERIZED HOT MIX ASPHALT BINDER COURSE, IL-9.5, N70, 2.25"
23. CHAIN LINK FENCE, 8'
24. PORTLAND CEMENT CONCRETE CURB SIDEWALK 4 INCH (SPEC
25. COMBINATION CONCRETE CURB AND GUTTER TYPE B-6.12
26. POROUS GRANULAR EMBANKMENT
27. HOT-MIX ASPHALT SURFACE COURSE, IL-9.5, MIX "C", N50, 3"
28. GEOTECHNICAL FABRIC FOR GROUND STABILIZATION

## STRUCTURAL PAVEMENT DESIGN INFORMATION

(SILVER ST.)

STRUCTURAL DESIGN TRAFFIC: YEAR 2042
PV = 28795 SU = 1446 MU= 523
ROAD / STREET CLASSIFICATION: CLASS I
PERCENT OF STRUCTURAL DESIGN TRAFFIC IN DESIGN LANE:
P = 32% S = 45% M = 45%
TRAFFIC FACTOR: Actual TF = 5.18
SUBGRADE SUPPORT RATING:
SSR = POOR

## NOTES:

1. SILVER ST PAVE SECTION MATCHES MAIN ST AND USES MAIN ST DATA
2. SEE PAVEMENT JOINTING PLANS FOR TYPE OF JOINTS AND BARS
3. WALL LIMITS: STA. 21+69.50 TO STA. 22+65.90

TYP-18

Michael Baker INTERNATIONAL
200 W Adams Street
Suite 1800
Chicago, IL 60606
P: 312.707.8770
FAX: 312.707.8804

| | | | |
|---|---|---|---|
| USER NAME = DLamb | DESIGNED - SAS | REVISED - | STATE OF ILLINOIS DEPARTMENT OF TRANSPORTATION |
| | DRAWN - DCL | REVISED - | |
| PLOT SCALE = 10.0000 ' / in. | CHECKED - RBB | REVISED - | |
| PLOT DATE = 6/6/2023 | DATE - 6/08/2023 | REVISED - | |

CEDAR ST. (IL-8/IL-116) OVER TZPR & IL-29
PROPOSED TYPICAL SECTIONS – SILVER STREET

SCALE: NO SCALE | SHEET 13 OF 13 SHEETS | STA. TO STA.

| F.A.P. RTE. | SECTION | COUNTY | TOTAL SHEETS | SHEET NO. |
|---|---|---|---|---|
| VAR. | 13 (HVB, HB-3) BR-1:R | TAZEWELL | 1173 | 51 |

CONTRACT NO. 68C55

ILLINOIS | FED. AID PROJECT

MODEL: Default
FILE NAME: pw:\\mbi-us-pw.bentley.com:mbi-us-pw-03\Documents\Chicago IL\01 Projects\179740 IDOT Cedar\Sfxt Pkl\5.0 CADD\CAD Sheets\0268C55-sht-typical14.dgn

## EARTHWORK SCHEDULE

| LOCATION | 20200100 EARTH EXCAVATION | 50200100 STRUCTURE EXCAVATION | EXCAVATION TO BE USED IN EMBANKMENT ADJUSTED FOR SHRINKAGE * | UNSUITABLE MATERIAL | EMBANKMENT | EARTHWORK BALANCE WASTE (+) OR SHORTAGE (-) | EXISTING TOPSOIL EXCAVATION | EXISTING TOPSOIL ADJUSTED FOR SHRINKAGE * | PROPOSED TOPSOIL PLACEMENT | 21101505 TOPSOIL EXCAVATION AND PLACEMENT BALANCE WASTE (+) OR SHORTAGE (-) | 20700220 POROUS GRANULAR EMBANKMENT |
|---|---|---|---|---|---|---|---|---|---|---|---|
| | A | B | C=(A+B) x 0.75 | D | E | F = C-D-E | G | H = G*0.75 | I | J = H-I | K |
| STATION TO STATION | CUYD | | | | | | | | | | |
| CEDAR ST. (IL-8/IL-116) OVER TZPR & IL-29 | | | | | | | | | | | |
| MAIN STREET | | | | | | | | | | | |
| 97+00.00 TO 100+00.00 | 728.2 | 0.0 | 546.2 | 161.0 | 276.8 | 108.4 | 250.5 | 187.9 | 87.5 | 100.4 | 0.0 |
| 100+00.00 TO 110+00.00 | 11792.6 | 601.0 | 9295.2 | 155.9 | 3648.1 | 5491.1 | 1584.8 | 1188.6 | 826.4 | 362.1 | 0.0 |
| 110+00.00 TO 124+15.00 | 5482.1 | 275.8 | 4318.4 | 353.4 | 2640.4 | 1324.6 | 1392.5 | 1044.4 | 927.4 | 117.0 | 67.1 |
| SUBTOTAL | 18002.9 | 877.0 | 14159.7 | 670.4 | 6565.3 | 6924.1 | 3227.8 | 2420.8 | 1841.3 | 579.5 | 67.1 |
| CEDAR STREET | | | | | | | | | | | |
| 67+67.40 TO 74+01.18 | 2567.1 | 0.0 | 1925.3 | 182.7 | 531.8 | 1210.7 | 338.0 | 253.5 | 54.0 | 199.5 | 0.0 |
| 74+50.00 TO 84+50.00 (TZPR BRIDGE) | 0.0 | 1052.0 | 789.0 | 0.0 | 0.0 | 789.0 | 0.0 | 0.0 | 0.0 | 0.0 | 0.0 |
| 84+50.00 TO 88+59.00 | 204.7 | 0.0 | 153.6 | 71.6 | 3391.5 | -3309.5 | 227.2 | 170.4 | 266.4 | -96.0 | 0.0 |
| SUBTOTAL | 2771.8 | 1052.0 | 2867.9 | 254.3 | 3923.3 | -1309.8 | 565.2 | 423.9 | 320.4 | 103.5 | 0.0 |
| MUP | | | | | | | | | | | |
| 50+06.81 TO 55+00.00 | 328.9 | 305.4 | 475.7 | | 456.3 | 19.5 | 461.7 | 346.2 | 130.7 | 215.5 | 166.5 |
| 55+50.00 TO 60+00.00 | 5560.5 | 974.2 | 4901.0 | | 398.1 | 4502.9 | 571.6 | 428.7 | 267.9 | 160.9 | 162.3 |
| 60+50.00 TO 65+00.00 | 1251.8 | 493.9 | 1309.3 | | 508.5 | 800.8 | 730.3 | 547.8 | 337.1 | 210.7 | 152.4 |
| 65+50.00 TO 66+64.30 | 1.0 | 13.8 | 11.2 | | 392.8 | -381.7 | 282.5 | 211.9 | 124.1 | 87.8 | 74.9 |
| SUBTOTAL | 7142.3 | 1787.3 | 6697.2 | 0.0 | 1755.7 | 4941.5 | 2046.1 | 1534.6 | 859.8 | 674.8 | 555.9 |
| RAMP A | | | | | | | | | | | |
| 188+59.95 TO 190+61.17 | 267.6 | 0.0 | 200.7 | 22.2 | 4.3 | 174.2 | 0.0 | 0.0 | 6.9 | -6.9 | 0.0 |
| 190+61.17 TO 195+39.79 | 141.9 | 0.0 | 106.4 | 29.5 | 16.9 | 60.0 | 0.0 | 0.0 | 0.0 | 0.0 | 0.0 |
| SUBTOTAL | 409.5 | 0.0 | 307.1 | 51.7 | 21.2 | 234.2 | 0.0 | 0.0 | 6.9 | -6.9 | 0.0 |
| RAMP B | | | | | | | | | | | |
| 288+59.95 TP 292+50.00 | 423.8 | 381.6 | 604.0 | 40.1 | 616.1 | -52.2 | 370.0 | 277.5 | 121.0 | 156.5 | 113.8 |
| 292+54.47 TO 296+62.14 | 1797.4 | 381.6 | 1634.3 | 381.4 | 625.8 | 627.1 | 703.0 | 527.3 | 349.0 | 178.3 | 51.1 |
| SUBTOTAL | 2221.2 | 763.2 | 2238.3 | 421.4 | 1241.9 | 574.9 | 1073.0 | 804.8 | 470.0 | 334.8 | 164.8 |
| RAMP C | | | | | | | | | | | |
| 304+39.92 TO 309+14.80 (RAMP C BRIDGE) | 0.0 | 241.0 | 180.8 | 0.0 | 0.0 | 180.8 | 0.0 | 0.0 | 0.0 | 0.0 | 0.0 |
| 309+14.80 TO 311+00.00 | 206.7 | 0.0 | 155.0 | 30.6 | 519.4 | -395.0 | 0.0 | 0.0 | 9.3 | -9.3 | 0.0 |
| 311+00.00 TO 314+41.69 | 455.5 | 0.0 | 341.7 | 82.2 | 40.2 | 219.3 | 0.0 | 0.0 | 0.0 | 0.0 | 0.0 |
| SUBTOTAL | 662.2 | 241.0 | 677.4 | 112.8 | 559.6 | 5.0 | 0.0 | 0.0 | 9.3 | -9.3 | 0.0 |
| RAMP D | | | | | | | | | | | |
| 404+95 TO 407+50 (RAMP D BRIDGE) | 0.0 | 254.0 | 190.5 | 0.0 | 0.0 | 190.5 | 0.0 | 0.0 | 0.0 | 0.0 | 0.0 |
| 407+50 TO 410+00 | 24.2 | 0.0 | 18.2 | 38.6 | 976.0 | -996.5 | 0.0 | 0.0 | 42.2 | -42.2 | 0.0 |
| 410+00 TO 411+70.36 | 55.3 | 0.0 | 41.5 | 14.3 | 421.1 | -393.9 | 0.0 | 0.0 | 8.0 | -8.0 | 0.0 |
| SUBTOTAL | 79.5 | 254.0 | 250.2 | 52.9 | 1397.1 | -1199.9 | 0.0 | 0.0 | 50.2 | -50.2 | 0.0 |
| SILVER STREET | 150.8 | 166.0 | 237.6 | 39.2 | 385.2 | -186.8 | 24.1 | 18.1 | 22.5 | -4.4 | 0.0 |
| SUBTOTAL | 150.8 | 166.0 | 237.6 | 39.2 | 385.2 | -186.8 | 24.1 | 18.1 | 22.5 | -4.4 | 0.0 |
| TOTAL | 31440 | 5141 | 27435 | 1605 | 15850 | 9985 | 6935 | 5200 | 3580 | 1620 | 790 |

| | | | |
|---|---|---|---|
| 20201200 | REMOVAL AND DISPOSAL OF UNSUITABLE MATERIAL | D+J | 3225 |

NOTES:

1. REMOVAL AND DISPOSAL OF UNSUITABLE MATERIAL HAS BEEN ESTIMATED FOR UNSUITABLE MATERIAL ENCOUNTERED IN THE EXCAVATION OF SIDE SLOPES AND ADDITIONAL EXCAVATION OF THE EXISTING ROADWAY SUBBASE. THE ACTUAL QUANTITY WILL BE DETERMINED IN THE FIELD BY THE ENGINEER.
2. EXISTING TOPSOIL DEPTH IS ESTIMATED TO BE 6". CONTRACTOR TO VERIFY PRIOR TO CONSTRUCTION AND NOTIFY THE ENGINEER OF ANY DISCREPANCY.
3. PROPOSED TOPSOIL DEPTH IS ESTIMATED TO BE 4".
4. RAMP A, C & D INFIELD EARTHWORK AND TOPSOIL QUANTITIES ARE QUANTIFIED IN MAIN STREET END AREA VOLUMES
5. REFER TO TYPICAL SECTION 4 (CURB & GUTTER BACKFILL DETAIL) FOR THE USE OF PGE.
6. REFER TO CROSS-SECTIONS AND DETAILS SHEETS FOR STRUCTURE NO. 090-8517 AND 090-8520 FOR THE USE OF PGE.
7. CONTRACTOR SHALL MAINTAIN A STOCKPILE OF EXCAVATION TO BE USED IN EMBANKMENT WITHIN THE PROJECT LIMITS. STOCKPILE LOCATION WILL BE DETERMINED IN THE FIELD BY THE ENGINEER.

'SHRINKAGE FACTOR = 25%

| TREE REMOVAL (6 TO 15 UNITS DIAMETER) | | | | 20100110 |
|---|---|---|---|---|
| ALIGNMENT | STA. | SIDE | SIZE | UNIT |
| MAIN ST | 98+10 | RT | 10 | |
| MAIN ST SUBOTAL | | | | 10 |
| RAMP D | 406+10 | LT | 6 | |
| RAMP D | 406+05 | LT | 6 | |
| RAMP D | 405+30 | LT | 8 | |
| RAMP D | 404+50 | LT | 14 | |
| RAMP D | 404+25 | LT | 7 | |
| RAMP D | 403+80 | LT | 5 | |
| RAMP D | 403+76 | LT | 7 | |
| RAMP D SUBTOTAL | | | | 53 |
| RAMP C | 302+00 | RT | 12 | |
| RAMP C | 303+90 | RT | 10 | |
| RAMP C | 304+00 | RT | 6 | |
| RAMP C | 304+40 | RT | 8 | |
| RAMP C | 304+60 | RT | 9 | |
| RAMP C | 305+10 | LT | 10 | |
| RAMP C | 305+15 | RT | 6 | |
| RAMP C | 305+30 | RT | 6 | |
| RAMP C | 305+30 | RT | 8 | |
| RAMP C | 305+30 | RT | 6 | |
| RAMP C SUBTOTAL | | | | 81 |
| CEDAR ST | 82+50 | LT | 4 | |
| CEDAR ST | 83+00 | LT | 14 | |
| CEDAR ST SUBTOTAL | | | | 18 |
| SILVER ST | 21+50 | LT | 16 | |
| SILVER ST SUBTOTAL | | | | 16 |
| | | | TOTAL | 178 |

| TREE REMOVAL (OVER 15 UNITS DIAMETER) | | | | 20100210 |
|---|---|---|---|---|
| ALIGNMENT | STA. | SIDE | SIZE | UNIT |
| RAMP C | 304+45 | RT | 16 | |
| RAMP C | 307+15 | RT | 22 | |
| RAMP C | 307+50 | LT | 18 | |
| RAMP C SUBTOTAL | | | | 56 |
| MAIN ST | 116+30 | LT | 16 | |
| MAIN ST | 115+80 | LT | 16 | |
| MAIN ST | 115+50 | LT | 24 | |
| MAIN ST | 114+70 | LT | 22 | |
| MAIN ST SUBOTAL | | | | 78 |
| | | | TOTAL | 134 |

| TREE REMOVAL, ACRES | | 20100500 |
|---|---|---|
| LOCATION | SIDE | TREE REMOVAL, ACRES |
| STATION TO STATION | | ACRE |
| MAIN STREET | | |
| STA. 112+96.10 TO STA. 113+02.00 | LT | 0.002 |
| STA. 113+08.46 TO STA. 113+20.27 | LT | 0.002 |
| STA. 113+26.41 TO STA. 113+38.39 | LT | 0.002 |
| STA. 114+13.45 TO STA. 114+27.35 | LT | 0.008 |
| STA. 114+14.47 TO STA. 114+70.56 | LT | 0.026 |
| STA. 114+87.87 TO STA. 115+09.92 | LT | 0.018 |
| STA. 115+79.21 TO STA. 116+02.59 | LT | 0.019 |
| STA. 116+26.10 TO STA. 117+40.26 | RT | 0.057 |
| STA. 116+30.48 TO STA. 116+51.74 | LT | 0.011 |
| STA. 116+85.45 TO STA. 117+10.93 | LT | 0.006 |
| STA. 119+41.84 TO STA. 120+76.04 | LT | 0.144 |
| SUBTOTAL | | 0.294 |
| CEDAR STREET | | |
| STA. 73+41.10 TO STA. 75+41.50 | RT | 0.230 |
| STA. 73+70.96 TO STA. 75+63.03 | LT | 0.203 |
| STA. 84+07.17 TO STA. 85+18.30 | LT | 0.006 |
| STA. 85+08.22 TO STA. 88+59.95 | LT | 0.076 |
| SUBTOTAL | | 0.515 |
| RAMP B | | |
| STA. 288+59.95 TO STA. 292+71.91 | LT | 0.303 |
| SUBTOTAL | | 0.303 |
| RAMP C | | |
| STA. 309+36.60 TO STA. 310+13.72 | RT | 0.019 |
| STA. 309+89.43 TO STA. 310+76.12 | RT | 0.030 |
| STA. 310+70.75 TO STA. 312+72.44 | RT | 0.049 |
| SUBTOTAL | | 0.097 |
| RAMP D | | |
| STA. 406+49.24 TO STA. 406+97.60 | LT | 0.031 |
| SUBTOTAL | | 0.031 |
| TOTAL | | 2 |

| HOT-MIX ASPHALT SURFACE REMOVAL - BUTT JOINT | 40600982 |
|---|---|
| LOCATION | HOT-MIX ASPHALT SURFACE REMOVAL - BUTT JOINT |
| STATION TO STATION | SQ YD |
| MAIN STREET | |
| STA. 96+90.00 TO STA. 97+00.00 | 82.1 |
| STA. 123+95.00 TO STA. 124+05.00 | 180.2 |
| SUBTOTAL | 262.4 |
| JOHNSON STREET | |
| STA. 30+85.30 TO STA. 30+95.30 | 33.4 |
| SUBTOTAL | 33.4 |
| PEKIN AVE | |
| STA. 40+86.72 TO STA. 40+76.72 | 34.4 |
| SUBTOTAL | 34.4 |
| RAVINE STREET | |
| STA. 123+16.01 TO STA. 123+88.73 | 54.1 |
| SUBTOTAL | 54.1 |
| TOTAL | 385 |

| TEMPORARY RAMP | 40600990 |
|---|---|
| LOCATION | TEMPORARY RAMP |
| STATION TO STATION | SQ YD |
| MAIN STREET | |
| STA. 96+90.00 TO STA. 97+00.00 | 57.7 |
| STA. 123+95.00 TO STA. 124+05.00 | 107.4 |
| SUBTOTAL | 165.1 |
| JOSEPHINE LANE | 11.5 |
| SUBTOTAL | 11.5 |
| JOHNSON STREET | |
| STA. 30+85.30 TO STA. 30+95.30 | 23.3 |
| SUBTOTAL | 23.3 |
| PEKIN AVE | |
| STA. 40+86.72 TO STA. 40+76.72 | 24.0 |
| SUBTOTAL | 24.0 |
| RAVINE STREET | |
| STA. 123+16.01 TO STA. 123+88.73 | 34.6 |
| SUBTOTAL | 34.6 |
| TOTAL | 259 |

| PAVEMENT REMOVAL SCHEDULE | | 44000100 |
|---|---|---|
| LOCATION | SIDE | PAVEMENT REMOVAL |
| STATION TO STATION | | SQ YD |
| MAIN STREET | | |
| STA. 97+00.00 TO STA. 101+50.00 | LT & RT | 3720.5 |
| STA. 101+50.00 TO STA. 105+36.55 | LT | 1299 |
| STA. 105+36.56 TO STA. 106+50.00 | LT | 409.2 |
| STA. 101+50.00 TO STA. 105+82.63 | RT | 1223.5 |
| STA. 105+82.63 TO STA. 106+50.00 | RT | 187 |
| STA. 106+50.00 TO STA. 112+50.00 | LT & RT | 4402.9 |
| STA. 112+50.00 TO STA. 118+50.02 | LT & RT | 4058.2 |
| STA. 118+50.02 TO STA. 123+16.06 | LT & RT | 3192.9 |
| STA. 114+26.67 TO STA. 115+63.72 | RT | 242.1 |
| STA. 123+16.06 TO STA. 123+92.76 | RT | 426.9 |
| SUBTOTAL | | 19162.2 |
| CEDAR STREET | | |
| STA. 67+67.40 TO STA. 71+50.00 | LT | 1057.4 |
| STA. 71+50.00 TO STA. 74+58.60 | LT | 862.2 |
| STA. 81+99.93 TO STA. 82+97.59 | LT | 177.6 |
| STA. 84+46.47 TO STA. 86+00.00 | LT | 291.3 |
| STA. 86+00.00 TO STA. 88+59.95 | LT | 520.6 |
| STA. 67+67.40 TO STA. 71+50.00 | RT | 1280.4 |
| STA. 71+50.00 TO STA. 74+58.60 | RT | 849.4 |
| STA. 81+82.73 TO STA. 82+97.59 | RT | 164.7 |
| STA. 84+59.65 TO STA. 86+00.00 | RT | 260.6 |
| STA. 86+00.00 TO STA. 88+59.95 | RT | 475.8 |
| SUBTOTAL | | 5940 |
| RAMP A | | |
| STA. 188+59.95 TO STA. 190+26.54 | LT | 327 |
| STA. 190+26.54 TO STA. 190+80.33 | LT | 131 |
| SUBTOTAL | | 458 |
| RAMP B | | |
| STA. 288+59.95 TO STA. 292+11.20 | RT | 618.9 |
| SUBTOTAL | | 618.9 |
| RAMP C | | |
| STA. 308+25.96 TO STA. 311+82.37 | LT | 620.3 |
| SUBTOTAL | | 620.3 |
| RAMP D | | |
| STA. 406+99.72 TO STA. 410+13.62 | RT | 523 |
| STA. 410+13.62 TO STA. 410+83.46 | RT | 116.5 |
| SUBTOTAL | | 639.5 |
| SILVER STREET | | |
| STA. 21+11.73 TO STA. 21+19.08 | | 6.6 |
| STA. 21+11.73 TO STA. 23+15.73 | | 500 |
| SUBTOTAL | | 506.6 |
| PARKING LOT (SILVER ST) | | |
| STA. 21+55.06 TO STA. 22+63.72 | | 227.4 |
| SUBTOTAL | | 227.4 |
| TOTAL | | 28173 |

| DRIVEWAY PAVEMENT REMOVAL SCHEDULE | | 44000200 |
|---|---|---|
| LOCATION | SIDE | DRIVEWAY PAVEMENT REMOVAL |
| STATION TO STATION | | SQ YD |
| MAIN STREET | | |
| STA. 100+09.93 TO STA. 100+28.98 | LT | 18.2 |
| STA. 102+48.43 TO STA. 103+33.27 | LT | 151.8 |
| STA. 112+95.24 TO STA. 113+86.97 | LT | 274.9 |
| STA. 113+75.44 TO STA. 114+14.27 | LT | 71.3 |
| STA. 114+71.92 TO STA. 114+88.98 | LT | 80.0 |
| STA. 114+85.79 TO STA. 115+05.11 | LT | 42.8 |
| STA. 116+05.07 TO STA. 116+83.46 | LT | 261.1 |
| STA. 116+40.11 TO STA. 116+54.05 | LT | 34.6 |
| STA. 116+92.95 TO STA. 117+08.99 | LT | 203.8 |
| STA. 117+73.7 TO STA. 117+98.27 | LT | 93.4 |
| STA. 117+98.27 TO STA. 118+25.08 | LT | 39.5 |
| STA. 118+20.56 TO STA. 118+39.28 | LT | 34.6 |
| STA. 118+98.56 TO STA. 120+86.67 | LT | 387.5 |
| STA. 118+98.89 TO STA. 120+06.50 | LT | 87.3 |
| STA. 120+06.44 TO STA. 120+41.94 | LT | 44.9 |
| STA. 120+00.28 TO STA. 120+17.76 | LT | 30.2 |
| STA. 121+52.08 TO STA. 121+95.55 | LT | 44.9 |
| STA. 113+51.97 TO STA. 113+62.33 | RT | 23.7 |
| STA. 114+56.12 TO STA. 116+46.61 | RT | 280.2 |
| SUBTOTAL | | 2204.6 |
| PEKIN AVE | | |
| STA. 40+66.42 TO STA. 41+24.66 | RT | 16.9 |
| SUBTOTAL | | 16.9 |
| JOHNSON ST | | |
| STA. 30+69.45 TO STA. 30+85.30 | LT | 8.0 |
| SUBTOTAL | | 8.0 |
| SILVER ST | | |
| STA. 21+11.70 TO STA. 21+18.89 | LT | 6.6 |
| STA. 21+11.70 TO STA. 21+20.19 | RT | 2.0 |
| SUBTOTAL | | 8.6 |
| TOTAL | | 2239 |

| HOT-MIX ASPHALT SURFACE REMOVAL, 2" | 44000157 |
|---|---|
| LOCATION | HOT-MIX ASPHALT SURFACE REMOVAL, 2" |
| STATION TO STATION | SQ YD |
| MAIN STREET | |
| STA. 123+16.06 TO STA. 124+05.00 | 579.6 |
| SUBTOTAL | 579.6 |
| PEKIN AVE | |
| STA. 40+62.76 TO STA. 40+86.72 | 99.2 |
| SUBTOTAL | 99.2 |
| TOTAL | 679 |

SCHOO-02

| COMBINATION CURB AND GUTTER REMOVAL SCHEDULE | | |
|---|---|---|
| | | 44000500 |
| LOCATION | SIDE | COMBINATION CURB AND GUTTER REMOVAL |
| STATION TO STATION | | FOOT |
| MAIN STREET | | |
| STA. 97+00.00 TO STA. 99+01.10 | LT | 242.6 |
| STA. 99+31.14 TO STA. 100+69.20 | LT | 226.3 |
| STA. 100+97.52 TO STA. 102+65.54 | LT | 197.6 |
| STA. 103+30.51 TO STA. 108+57.18 | LT | 524.7 |
| STA. 108+63.08 TO STA. 111+62.30 | LT | 313.9 |
| STA. 111+47.11 TO STA. 123+32.53 | LT | 1199.8 |
| STA. 123+77.05 TO STA. 123+92.67 | LT | 16.9 |
| STA. 97+00.00 TO STA. 98+63.48 | RT | 163.4 |
| STA. 116+46.62 TO STA. 120+03.53 | RT | 370.1 |
| SUBTOTAL | | 3255.3 |
| CEDAR ST | | |
| STA. 66+59.91 TO STA. 74+78.34 | LT | 818.9 |
| STA. 67+20.86 TO STA. 74+79.08 | RT | 759.0 |
| STA. 84+62.44 TO STA. 85+05.10 | RT | 42.4 |
| SUBTOTAL | | 1620.3 |
| RAMP A | | |
| STA. 189+05.08 TO STA 190+82.87 | LT | 211.7 |
| STA. 190+30.54 TO STA. 190+83.38 | RT | 51.8 |
| SUBTOTAL | | 263.5 |
| RAMP C | | |
| STA. 308+28.43 TO STA. 308+63.83 | LT | 40.3 |
| SUBTOTAL | | 40.3 |
| RAMP D | | |
| STA. 407+01.88 TO STA. 407+39.65 | RT | 38.8 |
| SUBTOTAL | | 38.8 |
| SILVER STREET | | |
| STA. 21+11.73 TO STA. 23+03.41 | LT | 171.2 |
| STA. 21+16.50 TO STA. 21+26.35 | LT | 18.3 |
| STA. 21+11.73 TO STA. 23+32.65 | RT | 171.1 |
| STA. 21+55.06 TO STA. 22+63.72 | | 127.6 |
| SUBTOTAL | | 488 |
| TOTAL | | 5707 |

| SIDEWALK REMOVAL SCHEDULE | | |
|---|---|---|
| | | 44000600 |
| LOCATION | SIDE | SIDEWALK REMOVAL |
| STATION TO STATION | | SQ FT |
| MAIN STREET | | |
| STA. 97+00.00 TO STA. 99+17.27 | RT | 777.6 |
| STA. 97+00.00 TO STA. 98+97.82 | LT | 975.4 |
| STA. 98+94.11 TO STA. 99+01.11 | LT | 81.7 |
| STA. 99+31.60 TO STA. 100+69.19 | LT | 940.3 |
| STA. 100+63.99 TO STA. 100+69.19 | LT | 42.4 |
| STA. 101+28.28 TO STA. 102+67.14 | LT | 611.6 |
| STA. 103+24.79 TO STA. 106+49.64 | LT | 1590.3 |
| STA. 106+49.64 TO STA. 109+08.65 | LT | 1148.4 |
| STA. 108+62.89 TO STA. 111+63.67 | LT | 1557.9 |
| STA. 112+50.02 TO STA. 114+81.33 | LT | 1032.2 |
| STA. 114+81.33 TO STA. 116+11.40 | LT | 573.2 |
| STA. 115+48.69 TO STA. 115+51.31 | LT | 192.1 |
| STA. 116+57.37 TO STA. 116+86.10 | LT | 117.4 |
| STA. 116+98.53 TO STA. 117+74.19 | LT | 523.5 |
| STA. 117+98.27 TO STA. 118+21.45 | LT | 100.4 |
| STA. 118+38.35 TO STA. 118+50.02 | LT | 53.6 |
| STA. 118+50.02 TO STA. 119+55.20 | LT | 472.3 |
| STA. 119+83.96 TO STA. 120+19.06 | LT | 129.1 |
| STA. 120+38.21 TO STA. 121+55.05 | LT | 490.7 |
| STA 121+90.65 TO STA. 123+32.53 | LT | 580.8 |
| SUBTOTAL | | 11990.9 |
| RAMP A | | |
| STA. 190+35.27 TO STA. 190+83.06 | RT | 267.2 |
| SUBTOTAL | | 267.2 |
| RAMP B | | |
| STA. 291+35.27 TO STA. 292+34.67 | LT | 445.6 |
| SUBTOTAL | | 445.6 |
| SILVER STREET | | |
| STA. 21+85.60 TO STA. 23+02.89 | | 379.2 |
| SUBTOTAL | | 379.2 |
| TOTAL | | 13083 |

| PAVED SHOULDER REMOVAL SCHEDULE | | |
|---|---|---|
| | | 44004250 |
| LOCATION | SIDE | PAVED SHOULDER REMOVAL |
| STATION TO STATION | | SQ YD |
| MAIN STREET | | |
| STA. 100+15.99 TO STA. 101+50.00 | RT | 125.3 |
| STA. 101+96.50 TO STA. 105+35.84 | RT | 236.6 |
| STA. 105+35.84 TO STA. 106+50.00 | RT | 76.3 |
| STA. 106+50.00 TO STA. 110+20.02 | RT | 256.0 |
| STA. 110+17.62 TO STA. 112+49.98 | RT | 245.9 |
| STA. 112+49.98 TO STA. 114+78.43 | RT | 243.1 |
| STA. 116+13.72 TO STA. 118+49.99 | RT | 161.2 |
| STA. 118+49.99 TO STA. 120+03.53 | RT | 124.8 |
| STA. 120+03.53 TO STA. 123+79.95 | RT | 312.9 |
| SUBTOTAL | | 1782.0 |
| CEDAR STREET | | |
| STA. 67+67.40 TO STA. 71+50.00 | LT | 390.0 |
| STA. 71+50.00 TO STA. 74+81.43 | LT | 312.0 |
| STA. 81+83.12 TO STA. 82+98.20 | LT | 88.0 |
| STA. 84+45.40 TO STA. 86+00.00 | LT | 128.0 |
| STA. 86+00.00 TO STA. 88+59.95 | LT | 238.3 |
| STA. 67+67.40 TO STA. 71+50.00 | RT | 401.9 |
| STA. 71+50.00 TO STA. 74+81.43 | RT | 283.9 |
| STA. 81+82.73 TO STA. 82+91.03 | RT | 80.1 |
| STA. 84+59.65 TO STA. 86+00.00 | RT | 84.3 |
| STA. 86+00.00 TO STA. 88+59.95 | RT | 197.9 |
| SUBTOTAL | | 2204.4 |
| RAMP A | | |
| STA. 189+06.43 TO STA. 190+38.21 | LT | 53.2 |
| STA. 188+59.95 TO STA. 195+39.79 | RT | 145.3 |
| SUBTOTAL | | 198.4 |
| RAMP B | | |
| STA. 288+59.95 TO STA. 291+38.03 | LT | 205.6 |
| STA. 288+59.95 TO STA. 291+04.83 | RT | 78.5 |
| SUBTOTAL | | 284.1 |
| RAMP C | | |
| STA. 300+25.96 TO STA. 310+21.55 | RT | 144.1 |
| STA. 310+21.55 TO STA. 311+81.40 | RT | 126.8 |
| STA. 308+15.60 TO STA. 310+21.55 | LT | 83.1 |
| STA. 310+21.55 TO STA. 311+85.74 | LT | 61.3 |
| SUBTOTAL | | 415.3 |
| RAMP D | | |
| STA. 407+38.99 TO STA. 408+79.70 | LT | 115.2 |
| STA. 408+79.70 TO STA. 411+27.35 | LT | 247.6 |
| STA. 406+91.23 TO STA. 408+78.63 | RT | 83.5 |
| STA. 408+78.63 TO STA. 410+81.29 | RT | 71.1 |
| SUBTOTAL | | 517.4 |
| TOTAL | | 5403 |

| GUARDRAIL REMOVAL SCHEDULE | | |
|---|---|---|
| | | 63200310 |
| LOCATION | SIDE | GUARDRAIL REMOVAL |
| STATION TO STATION | | FOOT |
| CEDAR STREET | | |
| STA. 66+06.06 TO STA. 74+77.32 | LT | 817.7 |
| STA. 67+21.37 TO STA 74+75.79 | RT | 755.2 |
| STA. 81+83.34 TO STA. 82+90.44 | RT | 107.1 |
| STA. 84+47.82 TO STA. 85+27.53 | LT | 86.6 |
| STA. 84+63.18 TO STA. 88+13.13 | RT | 308.2 |
| SUBTOTAL | | 2074.8 |
| RAMP C | | |
| STA. 303+00.08 TO STA. 305+92.18 | RT | 286.0 |
| STA. 302+72.76 TO STA. 304+00.28 | LT | 138.2 |
| SUBTOTAL | | 424.2 |
| RAMP D | | |
| STA. 403+22.58 TO STA. 407+29.22 | LT | 401.4 |
| STA. 403+12.29 TO STA. 405+65.22 | RT | 263.7 |
| SUBTOTAL | | 665.1 |
| TOTAL | | 3165 |

| MEDIAN REMOVAL SCHEDULE | |
|---|---|
| | 44003100 |
| LOCATION | MEDIAN REMOVAL |
| STATION TO STATION | SQ FT |
| MAIN STREET | |
| STA. 97+80.15 TO STA.100+54.56 | 1233.4 |
| STA. 99+02.43 TO STA. 99+18.29 | 142.6 |
| STA. 101+06.00 TO STA. 101+50.00 | 509.2 |
| STA. 101+50.00 TO STA. 105+36.33 | 2145.6 |
| STA. 105+36.33 TO STA. 106+50.00 | 361.6 |
| STA. 106+50.00 TO STA. 108+86.33 | 800.8 |
| SUBTOTAL | 5193.1 |
| CEDAR STREET | |
| STA. 67+67.40 TO STA. 71+50.00 | 1770.9 |
| STA. 71+50.00 TO STA. 74+81.54 | 1452.7 |
| STA. 81+82.86 TO STA. 82+94.73 | 298.3 |
| STA. 82+94.74 TO STA 83+32.56 | 146.2 |
| STA. 84+11.19 TO STA 84+52.02 | 126.6 |
| STA. 84+52.02 TO STA. 86+00.01 | 400.0 |
| STA. 86+00.01 TO STA. 88+59.95 | 828.8 |
| SUBTOTAL | 5023.4 |
| RAMP B | |
| STA. 288+59.95 TO STA. 289+17.43 | 303.9 |
| SUBTOTAL | 303.9 |
| SILVER STREET | |
| STA. 21+89.10 TO STA. 23+11.70 | 109.6 |
| SUBTOTAL | 109.6 |
| TOTAL | 10631 |

| RETAINING WALL REMOVAL | | |
|---|---|---|
| | | X3400004 |
| LOCATION | SIDE | RETAINING WALL REMOVAL |
| STATION TO STATION | | FOOT |
| MAIN STREET | | |
| STA. 113+00.00 TO STA. 115+67.71 | RT | 267.7 |
| STA. 113+62.31 TO STA. 113+85.18 | RT | 24.5 |
| STA. 112+93.13 TO STA. 113+29.73 | LT | 39.5 |
| STA. 113+55.98 TO STA. 113+77.61 | LT | 32.0 |
| STA. 113+71.02 TO STA. 113+92.41 | LT | 35.3 |
| STA. 113+97.15 TO STA. 114+15.60 | LT | 27.3 |
| STA. 115+97.05 TO STA. 116+30.44 | LT | 42.1 |
| STA. 115+96.46 TO STA. 116+10.71 | LT | 24.9 |
| STA. 115+91.52 TO STA. 116+09.38 | LT | 20.1 |
| STA. 116+19.22 TO STA. 116+51.59 | LT | 67.9 |
| STA. 118+87.40 TO STA. 119+24.17 | LT | 37.5 |
| STA. 119+04.74 TO STA. 119+85.57 | LT | 102.5 |
| STA. 119+56.11 TO STA. 119+56.12 | LT | 6.5 |
| STA. 120+66.40 TO STA. 120+86.60 | LT | 29.0 |
| TOTAL | | 757 |

| FENCE REMOVAL SCHEDULE | | |
|---|---|---|
| | | Z0022800 |
| LOCATION | SIDE | FENCE REMOVAL |
| STATION TO STATION | | FOOT |
| MAIN STREET | | |
| STA. 112+78.71 TO STA. 113+41.00 | LT | 62.5 |
| STA. 112+98.39 TO STA. 113+40.62 | LT | 68.6 |
| STA. 113+78.67 TO STA 113+78.99 | LT | 6.1 |
| STA. 117+13.16 TO STA. 117+19.02 | LT | 65.8 |
| STA. 116+14.21 TO STA. 116+22.96 | LT | 8.8 |
| STA. 116+40.82 TO STA. 116+40.83 | LT | 51.7 |
| STA. 116+86.54 TO STA. 116+88.48 | LT | 107.0 |
| SUBTOTAL | | 370.5 |
| CEDAR STREET | | |
| STA. 74+65.88 TO STA. 74+68.98 | LT | 64.0 |
| STA. 73+95.78 TO STA. 74+68.81 | RT | 134.6 |
| STA. 81+26.67 TO STA. 81+65.84 | LT | 86.3 |
| SUBTOTAL | | 284.9 |
| TOTAL | | 656 |

| APPROACH SLAB REMOVAL | | |
|---|---|---|
| | | Z0004552 |
| LOCATION | SIDE | APPROACH SLAB REMOVAL |
| STATION TO STATION | | SQ YD |
| CEDAR STREET | | |
| STA. 74+58.60 TO STA. 74+81.54 | RT | 63.4 |
| STA. 74+58.60 TO STA. 74+81.54 | LT | 62.2 |
| STA. 81+82.34 TO STA. 82+00.23 | RT | 28.5 |
| STA. 81+82.84 TO STA. 82+00.00 | LT | 31.4 |
| STA. 82+94.87 TO STA. 83+32.00 | RT | 78.9 |
| STA. 82+95.32 TO STA. 82+32.56 | LT | 77.4 |
| STA. 84+11.87 TO STA. 84+52.46 | RT | 87.7 |
| STA. 84+11.19 TO STA. 84+52.02 | LT | 88.2 |
| SUBTOTAL | | 517.6 |
| RAMP C | | |
| STA. 308+17.08 TO STA. 308+35.27 | | 24.0 |
| SUBTOTAL | | 24.0 |
| RAMP D | | |
| STA. 406+93.78 TO STA. 407+12.52 | | 28.5 |
| SUBTOTAL | | 28.5 |
| TOTAL | | 571 |

| DELINEATOR REMOVAL SCHEDULE | |
|---|---|
| | X6350120 |
| LOCATION | DELINEATOR REMOVAL |
| STATION TO STATION | EACH |
| RAMP D | |
| STA 400+00.0 TO STA 407+80.52 | 2 |
| STA 407+80.52 TO STA 411+70.36 | 3 |
| TOTAL | 5 |

SCHOQ-03

Michael Baker INTERNATIONAL
200 W Adams Street
Suite 1850
Chicago, IL 60606
PH: 312.707.8775
FAX: 312.707.8804

| | | |
|---|---|---|
| USER NAME = Winson.Teng | DESIGNED - JL | REVISED - |
| | DRAWN - DCL | REVISED - |
| PLOT SCALE = 200.0000 ' / in. | CHECKED - RBB | REVISED - |
| PLOT DATE = 5/1/2025 | DATE - 4/08/2025 | REVISED - |

**STATE OF ILLINOIS**
**DEPARTMENT OF TRANSPORTATION**

**CEDAR ST. (IL-8/IL-116) OVER TZPR & IL-29**
**SCHEDULE OF QUANTITIES**

SCALE: NO SCALE | SHEET 3 OF 14 SHEETS | STA. TO STA.

| F.A.P. RTE. | SECTION | COUNTY | TOTAL SHEETS | SHEET NO. |
|---|---|---|---|---|
| VAR. | 13 (HVB, HB-3) 8R-1;R | TAZEWELL | 1173 | 54 |

CONTRACT NO. 68C55

ILLINOIS | FED. AID PROJECT

MODEL: Default
FILE NAME: pw:\\mw-us-pw.bakerley.com:mb-us-pw-03\Documents\Chicago_IL\01 Projects\179740 IDOT CedarSIEx1 PhII\5.0 CADD\CAD Sheets\0468C55-sht-schedule03.dgn

## PAVEMENT SCHEDULE

| LOCATION | LENGTH | 21001000 GEOTECHNICAL FABRIC FOR GROUND STABILIZATION | 30300112 AGGREGATE SUBGRADE IMPROVEMENT, 12" | 31200100 STABILIZED SUBBASE, 4" | 42000401 PORTLAND CEMENT CONCRETE PAVEMENT 9" (JOINTED) | 48101600 AGGREGATE SHOULDERS, TYPE B, 8" | 48300400 PORTLAND CEMENT CONCRETE SHOULDERS, 9" | 42001300 PROTECTIVE COAT | 31101900 SUBBASE GRANULAR MATERIAL, TYPE C |
|---|---|---|---|---|---|---|---|---|---|
| STATION TO STATION | FOOT | | SQ YD | | | | | | TON |
| MAIN STREET | | | | | | | | | |
| 96+90.00 TO 102+85.45 | 585.45 | 5054.6 | 5054.6 | 0.0 | 4383.9 | | | 4669.2 | |
| 102+85.45 TO 109+09.24 | 623.79 | 4854.9 | 4854.9 | | 4046.2 | 136.0 | 407.2 | 4943.1 | |
| 109+09.24 TO 116+97.30 | 788.06 | 5068.6 | 5068.6 | | 4202.2 | | | 4633.5 | |
| 116+97.30 TO 124+05.00 | 695.42 | 4947.9 | 4947.9 | 0.0 | 4016.1 | | 310.8 | 4590.3 | |
| SUBTOTAL | | 19926.0 | 19926.0 | | 16648.4 | 136.0 | 718.0 | 18836.1 | |
| CEDAR STREET | | | | | | | | | |
| 67+67.40 TO 74+01.18 | 633.78 | 5224.6 | 5224.6 | 4264.1 | 3630.2 | | 1101.5 | 5154.2 | |
| 74+01.18 TO 85+58.22 (CEDAR ST BRIDGE) | 1157.04 | 298.2 | 298.2 | 225.4 | | | | 293.6 | 138.4 |
| 85+58.22 TO 88+59.95 | 301.73 | 1843.9 | 1843.9 | 1374.6 | 1072.8 | 113.3 | 536.4 | 1814.0 | 82.1 |
| SUBTOTAL | | 7366.7 | 7366.7 | 5864.0 | 4703.0 | 113.3 | 1637.9 | 7261.8 | 220.5 |
| RAMP A | | | | | | | | | |
| 188+59.95 TO 190+61.17 | 201.22 | 712.0 | 712.0 | 462.5 | 389.5 | 71.8 | 305.3 | 705.7 | 41.9 |
| 190+61.17 TO 195+39.79 | 478.62 | 762.1 | 762.1 | | 482.0 | | 134.9 | 753.5 | |
| SUBTOTAL | | 1474.1 | 1474.1 | 462.5 | 871.5 | 71.8 | 440.2 | 1459.2 | 41.9 |
| RAMP B | | | | | | | | | |
| 288+59.95 TP 294+65.43 | 605.48 | 1994.6 | 1994.6 | 1288.2 | 1084.8 | 65.4 | 857.8 | 2114.6 | |
| 294+65.43 TO 301+03.19 | 637.76 | 1498.4 | 1498.4 | | 767.7 | | 577.9 | 1528.7 | |
| SUBTOTAL | | 3493.0 | 3493.0 | 1288.2 | 1852.5 | 65.4 | 1435.7 | 3643.3 | 116.4 |
| RAMP C | | | | | | | | | |
| 300+52.62 TO 309+59.75 (RAMP C BRIDGE) | 907.13 | 49.4 | 49.4 | | | 7.2 | | 47.6 | 51.5 |
| 309+59.75 TO 312+55.45 | 295.70 | 877.0 | 877.0 | 632.6 | 532.7 | 47.1 | 480.7 | 1077.3 | |
| 312+55.45 TO 319+21.67 | 666.22 | 1437.1 | 1437.1 | | 761.7 | 15.2 | 508.0 | 1461.0 | |
| SUBTOTAL | | 2363.4 | 2363.4 | 632.6 | 1294.4 | 69.5 | 988.7 | 2585.9 | 51.5 |
| RAMP D | | | | | | | | | |
| 400+00.00 TO 407+80.52 (RAMP D BRIDGE) | 780.52 | 49.4 | 49.4 | | | | | 47.7 | 71.6 |
| 407+80.52 TO 411+70.36 | 389.84 | 1178.2 | 1178.2 | 834.4 | 702.8 | 19.4 | 594.9 | 1297.6 | |
| 411+70.36 TO 413+41.74 | 171.38 | 425.5 | 425.5 | | 277.6 | | 138.8 | 416.4 | |
| SUBTOTAL | | 1653.1 | 1653.1 | 834.4 | 980.4 | 19.4 | 733.7 | 1761.7 | 71.6 |
| SILVER STREET | | | | | | | | | |
| 20+54.37 TO 21+11.73 | 57.36 | | | | | | | | |
| 21+11.73 TO 22+96.37 | 184.64 | 566.8 | 566.8 | 0.0 | 443.0 | | | 452.5 | |
| SUBTOTAL | | 566.8 | 566.8 | | 443.0 | | | 452.5 | |
| SIDE ROADS | | | | | | | | | |
| JOHNSON ST | | 334.0 | 334.0 | | 265.5 | | | 306.3 | |
| PEKIN AVE | | 274.5 | 274.5 | | 239.3 | | | 292.9 | |
| SUBTOTAL | | 608.5 | 608.5 | | 504.8 | | | 599.2 | |
| TOTAL | | 37452 | 37452 | 9082 | 27298 | 475 | 5954 | 36600 | 502 |

## PAVEMENT CONNECTOR FOR BRIDGE APPROACH SLAB SCHEDULE

| LOCATION | START STATION | START OFFSET | LT/RT | END STATION | END OFFSET | LT/RT | 42000080 PAVEMENT CONNECTOR (PCC) FOR BRIDGE APPROACH SLAB |
|---|---|---|---|---|---|---|---|
| STATION TO STATION | | | | | | | SQ YD |
| CEDAR STREET | 74+01.18 | 3.00 | LT | 74+01.18 | 38.90 | LT | 61.1 |
| | 74+16.18 | 3.00 | LT | 74+16.18 | 40.40 | LT | |
| | 74+01.18 | 3.00 | RT | 70+01.18 | 38.74 | RT | 60.2 |
| | 74+16.18 | 3.00 | RT | 74+16.18 | 39.50 | RT | |
| | 85+31.10 | 3.00 | LT | 85+22.24 | 27.00 | LT | 89.9 |
| | 85+58.22 | 3.00 | LT | 85+58.22 | 27.00 | LT | |
| | 85+31.02 | 3.00 | RT | 85+41.78 | 27.00 | RT | 54.3 |
| | 85+58.22 | 3.00 | RT | 85+58.22 | 27.00 | RT | |
| SUBTOTAL | | | | | | | 265.5 |
| RAMP C | 309+44.75 | 8.00 | RT | 309+44.75 | 20.00 | LT | 47.6 |
| | 309+59.75 | 8.00 | RT | 309+59.75 | 20.00 | LT | |
| SUBTOTAL | | | | | | | 47.6 |
| RAMP D | 407+65.52 | 8.00 | LT | 407+65.52 | 20.00 | RT | 47.7 |
| | 407+80.52 | 8.00 | LT | 407+80.52 | 20.00 | RT | |
| SUBTOTAL | | | | | | | 47.7 |
| TOTAL | | | | | | | 361 |

## DRIVEWAYS SCHEDULE

| LOCATION | START STATION | START OFFSET | LT/RT | END STATION | END OFFSET | LT/RT | 42300300 PORTLAND CEMENT CONCRETE DRIVEWAY PAVEMENT, 7" |
|---|---|---|---|---|---|---|---|
| | | | | | | | SQ YD |
| MAIN STREET | | | | | | | SQ YD |
| | 102+48.43 | 58.19 | LT | 102+83.21 | 58.37 | LT | 45.8 |
| | 102+83.81 | 42.83 | LT | 103+18.90 | 38.55 | LT | 45.6 |
| SUBTOTAL | | | | | | | 91.4 |
| SILVER STREET | | | | | | | |
| | 21+12.26 | 17.96 | LT | 21+20.22 | 16.23 | LT | 2.0 |
| SUBTOTAL | | | | | | | 2.0 |
| TOTAL | | | | | | | 93 |

## HMA SCHEDULE

| LOCATION | 35100700 AGGREGATE BASE COURSE, TYPE A, 8" | 40600275 BITUMINOUS MATERIALS (PRIME COAT) | 40600295 POLYMERIZED BITUMINOUS MATERIALS (TACK COAT) | 40603208 POLYMERIZED HOT-MIX ASPHALT BINDER COURSE, IL-9.5, N70 | 40603235 POLYMERIZED HOT-MIX ASPHALT BINDER COURSE, IL-19.0, N70 | 40604172 POLYMERIZED HOT-MIX ASPHALT SURFACE COURSE, IL-9.5, MIX "E", N70 | 40604050 HOT-MIX ASPHALT SURFACE COURSE, IL-9.5, MIX "C", N50 | 40600905 POLYMERIZED HOT-MIX ASPHALT BINDER COURSE (HAND METHOD), N50 | 40600906 POLYMERIZED HOT-MIX ASPHALT BINDER COURSE (HAND METHOD), N70 |
|---|---|---|---|---|---|---|---|---|---|
| STATION TO STATION | SQ YD | POUND | | TON | | | | | |
| MAIN STREET | | | | | | | | | |
| 97+00.00 TO 102+87.11 | | | | | | 8.9 | | | |
| 102+87.11 TO 108+89.94 | | | | | | | | | |
| 108+89.94 TO 116+77.83 | | | | | | | | | |
| 116+77.83 TO 123+16.12 | | | | | | | | | |
| 123+16.12 TO 124+15.00 | | 577.5 | 952.9 | 32.3 | 93.4 | 119.5 | | | 70.6 |
| SUBTOTAL | | 577.5 | 952.9 | 32.3 | 93.4 | 128.4 | | | 70.6 |
| SILVER STREET | | | | | | | | | |
| 20+54.37 TO 21+11.73 | | | | | | | | | |
| 21+11.73 TO 22+96.37 | 57.5 | 0.0 | 41.4 | 0.0 | | | 9.6 | | |
| SUBTOTAL | 57.5 | | 41.4 | | | | 9.6 | | |
| SIDE ROADS | | | | | | | | | |
| JOHNSON ST | | | | | | | 3.2 | | |
| PEKIN AVE | 23.5 | | 106.9 | 0.0 | | | 18.0 | 14.0 | |
| SUBTOTAL | 23.5 | | 106.9 | | | | 21.2 | 14.0 | |
| TOTAL | 81 | 578 | 1101 | 32 | 93 | 128 | 31 | 14 | 71 |

SCHOQ-04

Michael Baker INTERNATIONAL
200 W Adams Street
Suite 1800
Chicago, IL 60606
PH: 312.707.8770
FAX: 312.707.8804

| | | |
|---|---|---|
| USER NAME = Winson.Teng | DESIGNED - JL | REVISED - |
| | DRAWN - DCL | REVISED - |
| PLOT SCALE = 200.0000 ' / in. | CHECKED - RBB | REVISED - |
| PLOT DATE = 5/1/2025 | DATE - 4/08/2025 | REVISED - |

**STATE OF ILLINOIS**
**DEPARTMENT OF TRANSPORTATION**

**CEDAR ST. (IL-84/L-116) OVER TZPR & IL-29**
**SCHEDULE OF QUANTITIES**

SCALE: NO SCALE | SHEET 4 OF 14 SHEETS | STA. TO STA.

| F.A.P. RTE. | SECTION | COUNTY | TOTAL SHEETS | SHEET NO. |
|---|---|---|---|---|
| VAR. | 13 (HVB, HB-3) BR-1;R | TAZEWELL | 1173 | 55 |

CONTRACT NO. 68C55

ILLINOIS | FED. AID PROJECT

## SIDEWALK SCHEDULE

| LOCATION | START STATION | START OFFSET | LT/RT | END STATION | END OFFSET | LT/RT | 42400100 PORTLAND CEMENT CONCRETE SIDEWALK 4 INCH | X4240420 PORTLAND CEMENT CONCRETE SIDEWALK 4 INCH (SPECIAL) |
|---|---|---|---|---|---|---|---|---|
| STATION TO STATION | | | | | | | SQ FT | SQ FT |
| MAIN STREET | 97+00.00 | 44.58 | LT | 98+97.70 | 60.68 | LT | 1424.8 | |
| | 97+00.00 | 33.26 | RT | 98+27.68 | 38.38 | RT | 884.1 | |
| | 99+31.37 | 73.87 | LT | 100+68.77 | 87.56 | LT | 1457.9 | |
| | 101+07.02 | 71.61 | LT | 102+54.37 | 46.11 | LT | 1085.8 | |
| | 103+27.30 | 39.2 | LT | 103+99.97 | 28.58 | LT | 499.5 | |
| | 109+12.63 | 39.2 | LT | 112+00.16 | 41.06 | LT | 2100.9 | |
| | 121+19.65 | 46.93 | LT | 121+47.31 | 45.82 | LT | 176.5 | |
| | 124+47.05 | 39.45 | LT | 123+15.99 | 43.17 | LT | | 1280.5 |
| | 123+15.99 | 42.58 | LT | 123+30.91 | 42.58 | LT | 67.4 | |
| SUBTOTAL | | | | | | | 7696.9 | 1280.5 |
| RAMP A | 190+20.97 | 13.89 | RT | 190+61.35 | 17.58 | RT | 230.0 | |
| | 190+61.35 | 17.58 | RT | 195+39.79 | 2.58 | RT | 3304.5 | |
| SUBTOTAL | | | | | | | 3534.5 | |
| RAMP B | 291+80.81 | 10.58 | LT | 294+65.43 | 20.33 | LT | 1961.5 | |
| | 294+65.43 | 20.33 | LT | 301+03.19 | 13.94 | LT | 4465.9 | |
| SUBTOTAL | | | | | | | 6427.4 | |
| TOTAL | | | | | | | 17659.0 | 1281.0 |

## RETAINING WALL CURB AND GUTTER AND OUTLETS

| LOCATION | START STATION | START OFFSET | LT/RT | END STATION | END OFFSET | LT/RT | X6062700 CONCRETE GUTTER, TYPE A (SPECIAL) | 60600095 CLASS SI CONCRETE (OUTLET) |
|---|---|---|---|---|---|---|---|---|
| STATION TO STATION | | | | | | | FOOT | CU YD |
| MAIN STREET | 123+37.93 | 109.53 | RT | 123+70.37 | 88.50 | RT | | 3.2 |
| SUBTOTAL | | | | | | | 0.0 | 3.2 |
| RAMP B | 288+74.00 | 15.33 | LT | 289+13.42 | 15.33 | LT | | 4.7 |
| | 289+13.42 | 15.33 | LT | 291+34.05 | 15.33 | LT | 219.4 | |
| | 291+34.05 | 15.33 | LT | 291+61.59 | 18.84 | LT | | 3.2 |
| | 291+61.59 | 18.84 | LT | 293+49.80 | 20.33 | LT | 180.3 | |
| | 293+49.80 | 20.33 | LT | 293+78.55 | 20.33 | LT | | 3.2 |
| | 293+78.55 | 20.33 | LT | 294+65.43 | 20.33 | LT | 86.9 | |
| | 294+65.43 | 20.33 | LT | 297+09.80 | 20.33 | LT | 244.4 | |
| | 297+09.80 | 20.33 | LT | 297+38.55 | 20.33 | LT | | 3.2 |
| | 297+38.55 | 20.33 | LT | 297+99.80 | 20.33 | LT | 61.3 | |
| | 297+99.80 | 20.33 | LT | 298+28.55 | 20.33 | LT | | 3.2 |
| | 298+28.55 | 20.33 | LT | 298+89.80 | 20.33 | LT | 61.3 | |
| | 298+89.80 | 20.33 | LT | 298+18.55 | 20.33 | LT | | 3.2 |
| | 299+18.55 | 20.33 | LT | 300+33.50 | 18.71 | LT | 115.0 | |
| | 300+33.50 | 18.71 | LT | 300+79.40 | 17.79 | LT | | 5.3 |
| SUBTOTAL | | | | | | | 968.6 | 26.0 |
| RAMP C | 308+07.79 | 57.83 | LT | 308+25.04 | 37.65 | LT | | 3.2 |
| | 309+59.75 | 21.08 | RT | 309+98.80 | 19.83 | RT | 36.2 | |
| | 310+29.32 | 17.84 | RT | 312+55.45 | 15.19 | RT | 223.1 | |
| | 312+55.45 | 15.19 | RT | 313+04.67 | 16.45 | RT | 49.2 | |
| | 313+33.42 | 17.19 | RT | 316+03.54 | 19.86 | RT | 270.2 | |
| SUBTOTAL | | | | | | | 578.7 | 3.2 |
| RAMP D | 406+84.71 | 48.88 | RT | 406+95.94 | 22.37 | RT | | 3.2 |
| | 407+80.51 | 45.15 | LT | 410+25.12 | 21.63 | LT | 227.3 | |
| | 410+53.97 | 19.21 | LT | 411+70.36 | 21.63 | LT | 116.1 | |
| | 411+70.36 | 21.63 | LT | 411+94.17 | 21.72 | LT | 23.6 | |
| SUBTOTAL | | | | | | | 367.0 | 3.2 |
| MUP | 51+54.43 | 15.75 | LT | 52+00.34 | 15.75 | LT | | 5.3 |
| | 53+40.05 | 15.75 | LT | 53+68.80 | 15.75 | LT | | 3.2 |
| | 55+84.68 | 15.75 | LT | 57+15.41 | 22.09 | LT | 106.6 | |
| | 57+45.58 | 15.75 | LT | 58+52.62 | 15.75 | LT | 107.0 | |
| | 58+81.37 | 15.75 | LT | 60+35.87 | 15.75 | LT | 152.0 | |
| | 60+70.59 | 15.75 | LT | 60+98.02 | 15.75 | LT | | 3.2 |
| | 63+65.17 | 15.75 | LT | 63+93.92 | 15.75 | LT | | 3.2 |
| SUBTOTAL | | | | | | | 365.6 | 14.9 |
| | | | | | | | | |
| TOTAL | | | | | | | 2280.0 | 50.5 |

## MEDIAN & ISLAND SCHEDULE

| LOCATION | START STATION | START OFFSET | LT/RT | END STATION | END OFFSET | LT/RT | 60618300 CONCRETE MEDIAN SURFACE, 4 INCH | 60619200 CONCRETE MEDIAN, TYPE SB-6.06 | 60622800 CONCRETE MEDIAN, TYPE SM-6.12 | 60619600 CONCRETE MEDIAN, TYPE SB-6.12 | 60620000 CONCRETE MEDIAN, TYPE SB-6.24 |
|---|---|---|---|---|---|---|---|---|---|---|---|
| STATION TO STATION | | | | | | | SQ FT | SQ FT | SQ FT | SQ FT | SQ FT |
| MAIN STREET | | | | | | | | | | | |
| | 98+37.14 | 4.90 | RT | 100+75.23 | 0.00 | CL | | | | 1271.3 | |
| | 99+02.81 | 31.28 | LT | 99+18.36 | 30.97 | LT | | 151.4 | | | |
| | 101+04.24 | 12.46 | RT | 101+23.71 | 0.00 | CL | | | | | |
| | 101+23.71 | 0.00 | CL | 102+85.45 | 0.00 | CL | 1320.8 | | | | |
| | 102+85.37 | 0.00 | CL | 109+09.24 | 0.00 | CL | | | | 2578.5 | |
| | 102+85.45 | 0.00 | CL | 102+86.10 | 0.00 | CL | 1.2 | | | | |
| | 109+09.24 | 0 | CL | 116+97.30 | 0 | CL | | | | 3150.0 | 481.1 |
| | 109+12.63 | 39.2 | LT | 109+15.42 | 28.58 | LT | 57.3 | | | | |
| | 111+98.15 | 28.58 | LT | 112+00.16 | 41.06 | LT | 118.7 | | | | |
| SUBTOTAL | | | | | | | 1498.0 | 151.4 | | 6999.8 | 481.1 |
| CEDAR STREET | | | | | | | | | | | |
| | 67+67.40 | 0 | CL | 74+01.18 | 0 | CL | | | 3802.7 | | |
| | 74+01.18 | 0 | CL | 74+16.18 | 0 | CL | | | 90.0 | | |
| | 85+30.03 | 0 | CL | 85+58.22 | 0 | CL | | | 162.7 | | |
| | 85+58.22 | 0 | CL | 88+59.95 | 0 | CL | | | 1842.5 | | |
| SUBTOTAL | | | | | | | | | 5897.9 | | |
| RAMP B | | | | | | | | | | | |
| | 288+70.00 | 12.58 | LT | 291+80.81 | 17.58 | LT | 732.1 | | | | |
| SUBTOTAL | | | | | | | 732.1 | | | | |
| TOTAL | | | | | | | 2230 | 151 | 5898 | 7000 | 481 |

## DETECTABLE WARNINGS - ADA RAMPS

| LOCATION | 42400800 DETECTABLE WARNINGS |
|---|---|
| | SQFT |
| JOHNSON STREET | |
| SW | 15 |
| SE | 14 |
| JOHNSON STREET MEDIAN ISLAND | 20 |
| PEKIN AVE | |
| SE | 14 |
| SW | 14 |
| RAMP A | |
| NW | 12 |
| SE | 13 |
| RAMP B | |
| SW | 15 |
| NE | 14 |
| | |
| TOTAL | 131 |

## FENCE SCHEDULE

| LOCATION | START STATION | START OFFSET | LT/RT | END STATION | END OFFSET | LT/RT | 66400505 CHAIN LINK FENCE, 8' FOOT |
|---|---|---|---|---|---|---|---|
| FUTURE MULTI-USE PATH | 55+00.00 | | | 61+00.00 | | | |
| | 56+39.88 | 41.25 | RT | 60+04.04 | 13.32 | RT | 386.6 |
| | 60+04.04 | 13.32 | RT | 60+32.50 | 37.71 | RT | 38.1 |
| | 60+32.50 | 37.71 | RT | 60+70.31 | 46.43 | RT | 34.5 |
| SUBTOTAL | | | | | | | 459.2 |
| TOTAL | | | | | | | 459 |

SCHOQ-05

CONCRETE CURB & GUTTER SCHEDULE

| LOCATION | START STATION | START OFFSET | LT/RT | END STATION | END OFFSET | LT/RT | 60600605 CONCRETE CURB, TYPE B | 60603800 COMBINATION CONCRETE CURB AND GUTTER, TYPE B-6.12 | 60605000 COMBINATION CONCRETE CURB AND GUTTER, TYPE B-6.24 |
|---|---|---|---|---|---|---|---|---|---|
| STATION TO STATION | | | | | | | FOOT | | |
| MAIN STREET | | | | | | | | | |
| | 97+00.00 | 44.58 | LT | 97+74.46 | 35.29 | LT | | 75.4 | |
| | 97+00.00 | 28.58 | RT | 0+97.15 | 29.58 | RT | | 15.0 | |
| | 97+15.00 | 29.58 | RT | 98+30.24 | 30.52 | RT | | | 115.3 |
| | 97+74.46 | 35.29 | LT | 98+66.25 | 30.74 | LT | | | 92.4 |
| | 98+57.11 | 47.47 | RT | 99+19.25 | 52.38 | RT | | | 57.0 |
| | 98+66.25 | 30.74 | LT | 98+98.62 | 79.11 | LT | | | 68.0 |
| | 99+31.91 | 79.17 | LT | 99+69.09 | 28.58 | LT | | | 73.4 |
| | 99+69.09 | 28.58 | LT | 100+18.23 | 28.58 | LT | | | 51.6 |
| | 100+18.23 | 28 | LT | 100+69.73 | 95.93 | LT | | | 100.2 |
| | 100+99.78 | 97.66 | LT | 101+53.83 | 42.58 | LT | | | 85.9 |
| | 101+08.12 | 66.71 | LT | 101+23.12 | 67.78 | LT | 31.8 | | |
| | 101+23.71 | 11.01 | RT | 102+85.45 | 1.49 | RT | | 162.8 | |
| | 101+23.71 | 0.42 | LT | 102+85.45 | 0.42 | LT | | 162.4 | |
| | 101+53.83 | 42.58 | LT | 102+85.45 | 35.16 | LT | | | 130.3 |
| | 102+41.43 | 47.45 | LT | 102+48.43 | 58.19 | LT | 27.6 | | |
| | 102+85.45 | 35.16 | LT | 104+00.04 | 28 | LT | | | 113.9 |
| | 102+99.74 | 56.71 | LT | 103+41.32 | 35.58 | LT | 48.5 | | |
| | 109+09.07 | 38.43 | LT | 109+10.41 | 28.5 | LT | | | 18.6 |
| | 109+10.41 | 28.5 | LT | 112+08.48 | 29.03 | LT | | | 294.1 |
| | 109+14.04 | 40.7 | LT | 109+17.42 | 28.58 | LT | 13.1 | | |
| | 109+19.11 | 43.91 | LT | 109+34.61 | 35.58 | LT | 20.0 | | |
| | 111+78.74 | 35.58 | LT | 111+91.61 | 43.86 | LT | 18.8 | | |
| | 111+96.15 | 28.58 | LT | 111+98.25 | 41.66 | LT | 13.4 | | |
| | 112+08.48 | 29.03 | LT | 112+09.73 | 37.84 | LT | | | 12.2 |
| | 117+56.91 | 34.58 | RT | 123+37.11 | 107.99 | RT | | | 700.0 |
| | 121+19.37 | 39.98 | LT | 123+34.02 | 44.58 | LT | | | 218.0 |
| SUBTOTAL | | | | | | | 173.2 | 415.6 | 2130.9 |
| RAMP A | | | | | | | | | |
| | 190+20.30 | 14.27 | RT | 109+53.98 | 18.15 | RT | 28.8 | | |
| | 190+20.31 | 13.56 | RT | 190+61.17 | 10 | RT | | | 38.0 |
| | 190+24.27 | 21.42 | LT | 190+44.90 | 20.6 | LT | | | 25.5 |
| | 190+61.17 | 10 | RT | 195+39.79 | 2 | RT | | | 475.6 |
| SUBTOTAL | | | | | | | 28.8 | | 539.1 |
| RAMP B | | | | | | | | | |
| | 288+60.00 | 10 | LT | 294+65.43 | 10 | LT | | | 599.5 |
| | 291+68.14 | 21.43 | RT | 291+98.35 | 21.04 | RT | | | 33.0 |
| | 294+65.43 | 10 | LT | 301+03.19 | 6.98 | LT | | | 637.9 |
| SUBTOTAL | | | | | | | | | 1270.4 |
| RAMP C | | | | | | | | | |
| | 310+30.67 | 8 | RT | 312+55.45 | 8 | RT | | | 223.0 |
| | 312+55.45 | 8 | RT | 319+21.67 | 8 | RT | | | 666.2 |
| SUBTOTAL | | | | | | | | | 889.2 |
| SILVER STREET | | | | | | | | | |
| | 21+12.26 | 15.38 | RT | 21+22.34 | 15.92 | RT | | 12.0 | |
| | 21+16.07 | 29.98 | LT | 21+54.29 | 11.33 | LT | | 41.6 | |
| | 21+70.42 | 12.35 | LT | 22+92.64 | 12.37 | LT | | | 138.6 |
| | 21+22.33 | 16.5 | RT | 22+88.78 | 18.14 | RT | | | 162.5 |
| | 21+62.95 | 23.18 | LT | 21+69.50 | 20.41 | LT | 5.0 | | |
| | 22+59.70 | 20.41 | LT | 22+62.26 | 26.71 | LT | 7.3 | | |
| SUBTOTAL | | | | | | | 12.3 | 53.6 | 301.1 |
| TOTAL | | | | | | | 214.0 | 469.0 | 5131.0 |

SCHOO-06

Michael Baker INTERNATIONAL
200 W Adams Street
Suite 1800
Chicago, IL 60606
P:+1 312.707.8970
FAX: 312.707.8604

| | | |
|---|---|---|
| USER NAME = DLamb | DESIGNED - JL | REVISED - |
| | DRAWN - DCL | REVISED - |
| PLOT SCALE = 200.0000 ' / in. | CHECKED - RBB | REVISED - |
| PLOT DATE = 6/6/2023 | DATE - 6/08/2023 | REVISED - |

**STATE OF ILLINOIS**
**DEPARTMENT OF TRANSPORTATION**

**CEDAR ST. (IL-8/IL-116) OVER TZPR & IL-29**
**SCHEDULE OF QUANTITIES**

SCALE: NO SCALE | SHEET 6 OF 14 SHEETS | STA. TO STA.

| F.A.P. RTE. | SECTION | COUNTY | TOTAL SHEETS | SHEET NO. |
|---|---|---|---|---|
| VAR. | 13 (HVB, HB-3) 8R-1;R | TAZEWELL | 1173 | 57 |

CONTRACT NO. 68C55

ILLINOIS | FED. AID PROJECT

MODEL: Default
FILE NAME: pw:\\mbakerintl.com:mbi-ucs-pw-p03\Documents\Chicago IL\01 Projects\179740 IDOT Cedar St\Ext Phl15.0 CADD\CAD Sheets\0468C55-sht-schedule06.dgn

| GUARDRAIL SCHEDULE | | | | | | | | | | | |
|---|---|---|---|---|---|---|---|---|---|---|---|
| LOCATION | SIDE (LT/RT) | LENGTH | 63000001 | 63000003 | 63100045 | 63100070 | 63100085 | 63100167 | 78200005 | 72501000 | Z0001002 |
| | | | STEEL PLATE BEAM GUARDRAIL, TYPE A, 6 FOOT POSTS | STEEL PLATE BEAM GUARDRAIL, TYPE A, 9 FOOT POSTS | TRAFFIC BARRIER TERMINAL, TYPE 2 | TRAFFIC BARRIER TERMINAL, TYPE 5 | TRAFFIC BARRIER TERMINAL, TYPE 6 | TRAFFIC BARRIER TERMINAL, TYPE 1 (SPECIAL) TANGENT | GUARDRAIL REFLECTORS, TYPE A | TERMINAL MARKER - DIRECT APPLIED | GUARDRAIL AGGREGATE EROSION CONTROL |
| STATION TO STATION | | FOOT | FOOT | | EACH | | | | | | TON |
| CEDAR STREET | | | | | | | | | | | |
| STA. 67+67.40 TO STA. 74+26.75 | LT | 659.35 | | 622.70 | | | 1 | | 4 | | 92.26 |
| STA. 67+67.40 TO STA. 74+26.75 | RT | 659.35 | | 622.80 | | | 1 | | 4 | | 92.52 |
| STA. 85+07.41 TO STA. 86+10.50 | LT | 103.09 | 25.00 | | | | 1 | 1 | 1 | 1 | 23.96 |
| STA. 85+07.41 TO STA. 86+91.49 | RT | 184.08 | 100.00 | | 1 | | 1 | | 3 | | 30.34 |
| SUBTOTAL | | | 125.00 | 1245.50 | 1 | | 4 | 1 | 12 | 1 | 239.09 |
| RAMP C | | | | | | | | | | | |
| STA 309+30.67 TO STA 310+24.83 | LT | 94.16 | 75.00 | | 1 | 1 | | | 2 | | 24.03 |
| STA 309+30.67 TO STA 311+93.10 | RT | 262.43 | | 231.00 | | 1 | | | 5 | | 41.41 |
| STA 311+93.10 TO STA 316+24.59 | RT | 431.49 | 419.00 | | 1 | | | | 8 | | 83.28 |
| SUBTOTAL | | | 494.00 | 231.00 | 2 | 2 | | | 15 | | 148.72 |
| RAMP D | | | | | | | | | | | |
| STA 407+54.85 TO STA. 413+36.59 | LT | 581.74 | 487.50 | | | | 1 | 1 | 10 | 1 | 117.44 |
| STA 407+54.85 TO STA. 409+53.37 | RT | 198.52 | 112.50 | | | | 1 | 1 | 2 | 1 | 48.92 |
| SUBTOTAL | | | 600.00 | | | | 2 | 2 | 12 | 2 | 166.36 |
| TOTAL | | | 1219 | 1477 | 3 | 2 | 6 | 3 | 39 | 3 | 555 |

| ATTENUATORS SCHEDULE | | | | |
|---|---|---|---|---|
| LOCATION | OFFSET | SIDE (LT/RT) | 64300920 | 64300260 |
| | | | IMPACT ATTENUATORS (SEVERE USE, WIDE), TEST LEVEL 3 | IMPACT ATTENUATORS (FULLY REDIRECTIVE, NARROW), TEST LEVEL 3 |
| STATION | | | EACH | |
| MAIN STREET | | | | |
| STA 121+47.35 | 46.95' | LT | | 1 |
| SUBTOTAL | | | | 1 |
| CEDAR STREET | | | | |
| STA 77+87.95 | 23.00' | RT | 1 | |
| SUBTOTAL | | | 1 | |
| TOTAL | | | 1 | 1 |

| UTILITY STRUCTURE ADJUSTMENT SCHEDULE | | | | | | |
|---|---|---|---|---|---|---|
| ALIGNMENT | STATION | OFFSET | LT/RT | 60300305 | 60300350 | 60300405 |
| | | | | FRAMES AND LIDS TO BE ADJUSTED | MANHOLE FRAMES TO BE ADJUSTED | VALVE BOX FRAMES TO BE ADJUSTED |
| | | | | EACH | EACH | EACH |
| MAIN ST. | 97+26 | 46' | LT | 1 | | |
| MAIN ST. | 97+27 | 23' | RT | 1 | | |
| MAIN ST. | 98+66 | 35' | LT | 1 | | |
| MAIN ST. | 99+08 | 3' | RT | | | 1 |
| MAIN ST. | 99+17 | 24' | RT | | | 1 |
| MAIN ST. | 99+30 | 27' | LT | | 1 | |
| MAIN ST. | 99+50 | 67' | RT | | 1 | |
| MAIN ST. | 100+09 | 47' | RT | | 1 | |
| MAIN ST. | 100+67 | 42' | RT | 1 | | |
| MAIN ST. | 101+13 | 35' | LT | | 1 | |
| MAIN ST. | 101+15 | 28' | LT | | | 1 |
| MAIN ST. | 101+15 | 45' | LT | | | 1 |
| MAIN ST. | 101+15 | 47' | LT | | | 1 |
| MAIN ST. | 101+19 | 35' | LT | | | 1 |
| MAIN ST. | 102+06 | 49' | LT | 1 | | |
| MAIN ST. | 102+72 | 36' | LT | | 1 | |
| MAIN ST. | 102+88 | 77' | RT | | 1 | |
| MAIN ST. | 103+97 | 38' | LT | | 1 | |
| MAIN ST. | 105+47 | 37' | LT | | 1 | |
| MAIN ST. | 107+13 | 36' | LT | | 1 | |
| MAIN ST. | 108+05 | 30' | RT | 1 | | |
| MAIN ST. | 108+77 | 35' | LT | | 1 | |
| MAIN ST. | 112+27 | 33' | LT | | 1 | |
| MAIN ST. | 112+77 | 35' | LT | | 1 | |
| MAIN ST. | 115+55 | 35' | LT | | 1 | |
| MAIN ST. | 116+40 | 32' | RT | 1 | | |
| MAIN ST. | 117+97 | 33' | LT | | 1 | |
| MAIN ST. | 118+77 | 32' | LT | | 1 | |
| MAIN ST. | 120+60 | 49' | LT | | | 1 |
| MAIN ST. | 121+50 | 27' | LT | | 1 | |
| MAIN ST. | 123+42 | 19' | LT | | 1 | |
| MAIN ST. | 123+46 | 32' | RT | 1 | | |
| JOHNSON ST. | 30+60 | 3' | RT | | 1 | |
| PEKIN AVE. | 40+90 | 21' | LT | | 1 | |
| SILVER ST. | 30+61 | 31' | LT | 1 | | |
| TOTAL | | | | 9 | 19 | 7 |

| STATION | OFFSET | LT/RT | 66600105 | 66700305 |
|---|---|---|---|---|
| | | | FURNISHING AND ERECTING RIGHT OF WAY MARKERS | PERMANENT SURVEY MARKERS, TYPE I |
| | FOOT | | EACH | EACH |
| 91+44.79 | 0.00 | RT | | 1 |
| 93+43.15 | 0.00 | RT | | 1 |
| 97+07.46 | 0.00 | RT | | 1 |
| 98+05.71 | 67.00 | RT | 1 | |
| 98+27.00 | 111.00 | RT | 1 | |
| 98+57.46 | 0.00 | RT | | 1 |
| 99+05.46 | 155.00 | RT | 1 | |
| 99+82.91 | 13.57 | LT | | 1 |
| 101+04.46 | 0.00 | RT | | 1 |
| 102+02.42 | 0.00 | RT | | 1 |
| 103+75.49 | 57.83 | LT | 1 | |
| 104+76.49 | 70.00 | LT | 1 | |
| 105+43.04 | 19.68 | RT | | 1 |
| 108+80.63 | 0.00 | RT | | 1 |
| 112+25.24 | 120.60 | RT | 1 | |
| 112+92.69 | 155.01 | LT | 1 | |
| 113+00.00 | 0.00 | RT | | 1 |
| 114+25.69 | 160.50 | RT | 1 | |
| 114+25.60 | 150.50 | RT | 1 | |
| 114+95.75 | 210.73 | LT | 1 | |
| 114+88.17 | 75.00 | LT | 1 | |
| 115+85.80 | 167.42 | RT | 1 | |
| 115+88.05 | 70.00 | LT | 1 | |
| 115+97.46 | 238.63 | LT | 1 | |
| 116+39.90 | 95.00 | RT | 1 | |
| 117+23.73 | 273.28 | LT | 1 | |
| 120+02.84 | 0.00 | RT | | 1 |
| 121+47.81 | 264.77 | LT | 1 | |
| 121+37.56 | 79.14 | LT | 1 | |
| 121+36.28 | 56.00 | LT | 1 | |
| 123+30.18 | 50.00 | LT | 1 | |
| 124+79.50 | 0.00 | RT | | 1 |
| | | TOTALS | 20 | 12 |

| TRAVERSABLE PIPE GRATE SCHEDULE | | | | | | | |
|---|---|---|---|---|---|---|---|
| LOCATION | START STATION | OFFSET | LT/RT | END STATION | OFFSET | LT/RT | 54260315 |
| | | | | | | | TRAVERSABLE PIPE GRATE FOR CONCRETE END SECTION |
| | | | | | | | FOOT |
| RAMP B | 288+61.00 | 18.59 | LT | 288+69.00 | 18.58 | LT | 8.0 |
| TOTAL | | | | | | | 8 |

| UTILITY STRUCTURE ADJUSTMENT SCHEDULE | | | | |
|---|---|---|---|---|
| X8140117 | | | | |
| HANDHOLE TO BE ADJUSTED WITH NEW FRAME AND COVER | | | | |
| ALIGNMENT | STATION | OFFSET | LT/RT | EACH |
| MAIN ST. | 97+20 | 51' | LT | 1 |
| MAIN ST. | 99+43 | 46' | LT | 1 |
| MAIN ST. | 99+94 | 30' | LT | 1 |
| | | | TOTAL | 3 |

SCHOO-07

| STAGING TEMPORARY PAVEMENT MARKING | | | | | | | |
|---|---|---|---|---|---|---|---|
| LOCATION | 70307120 | | | | 70307130 | 70307160 | 70307210 |
| | TEMPORARY PAVEMENT MARKING - LINE 4" - TYPE IV TAPE | | | | TEMPORARY PAVEMENT MARKING LINE 6" - TYPE IV TAPE | TEMPORARY PAVEMENT MARKING - LINE 12" - TYPE IV TAPE | TEMPORARY PAVEMENT MARKING LINE 24" - TYPE IV TAPE |
| | WHITE SOLID 4" | SKIP DASH WHITE 4" | YELLOW SOLID 4" | DOUBLE YELLOW | TURN & CROSSWALK | DIAGONAL MARKERS | STOP BAR |
| | FOOT | | | | | | |
| CEDAR ST. (IL-8/IL-116) OVER TZPR & IL-29 | | | | | | | |
| STAGE 1 | | | | | | | |
| MAIN STREET | 4550.0 | 19.0 | 2673.0 | 0.0 | 181.0 | | |
| JOHNSON STREET | | | | | | | |
| PEKIN AVENUE | 151.0 | | | | | | |
| SILVER STREET | | | | | | | |
| SUBTOTAL | 4701.0 | 19.0 | 2673.0 | 0.0 | 181.0 | 0.0 | 0.0 |
| STAGE 2A | | | | | | | |
| MAIN STREET | 2420.0 | | 1591.0 | 392.0 | 249.0 | 206.0 | 37.0 |
| JOHNSON STREET | 128.0 | | 162.0 | 363.0 | | | 12.0 |
| PEKIN AVENUE | 96.0 | | 649.0 | | | | 13.0 |
| SILVER STREET | | | | 150.0 | | | 24.0 |
| SUBTOTAL | 2644.0 | 0.0 | 2402.0 | 905.0 | 249.0 | 206.0 | 86.0 |
| STAGE 2B | | | | | | | |
| MAIN STREET | 453.0 | | 51.0 | | | | |
| JOHNSON STREET | 150.0 | | 393.0 | | | | 15.0 |
| PEKIN AVENUE | | | 320.0 | | | | 18.0 |
| SILVER STREET | | | | | | | |
| SUBTOTAL | 603.0 | 0.0 | 764.0 | 0.0 | 0.0 | 0.0 | 33.0 |
| STAGE 2C | | | | | | | |
| MAIN STREET | 3454.0 | | 1768.0 | 1617.0 | | | |
| JOHNSON STREET | 138.0 | | 116.0 | 204.0 | | | 16.0 |
| PEKIN AVENUE | 144.0 | | 396.0 | | | | 12.0 |
| SILVER STREET | | | | | | | |
| SUBTOTAL | 3736.0 | 0.0 | 2280.0 | 1821.0 | 0.0 | 0.0 | 28.0 |
| STAGE 2D | | | | | | | |
| MAIN STREET | 1746.0 | 31.0 | 2387.0 | | 137.0 | | |
| JOHNSON STREET | | | | | 248.0 | | 19.0 |
| PEKIN AVENUE | | | 606.0 | | 140.0 | | 28.0 |
| SILVER STREET | | | | | | | |
| SUBTOTAL | 1746.0 | 31.0 | 2993.0 | 0.0 | 525.0 | 0.0 | 47.0 |
| STAGE 3A | | | | | | | |
| MAIN STREET | 2961.0 | 42.0 | 1486.0 | 1955.0 | 85.0 | | 15.0 |
| SUBTOTAL | 2961.0 | 42.0 | 1486.0 | 1955.0 | 85.0 | 0.0 | 15.0 |
| STAGE 3B | | | | | | | |
| MAIN STREET | 3185.0 | 321.0 | 131.0 | 278.0 | 310.0 | | 43.0 |
| SUBTOTAL | 3185.0 | 321.0 | 131.0 | 278.0 | 310.0 | 0.0 | 43.0 |
| STAGE 4A | | | | | | | |
| MAIN STREET | 6737.0 | 24.0 | 4069.0 | 3132.0 | 126.0 | | |
| SUBTOTAL | 6737.0 | 24.0 | 4069.0 | 3132.0 | 126.0 | 0.0 | 0.0 |
| STAGE 4B | | | | | | | |
| MAIN STREET | 2009.0 | 19.0 | 1314.0 | 1194.0 | 181.0 | | |
| SUBTOTAL | 2009.0 | 19.0 | 1314.0 | 1194.0 | 181.0 | 0.0 | 0.0 |
| STAGE 4C | | | | | | | |
| MAIN STREET | 5222.0 | 201.0 | 2705.0 | 4083.0 | 97.0 | | 92.0 |
| SUBTOTAL | 5222.0 | 201.0 | 2705.0 | 4083.0 | 97.0 | 0.0 | 92.0 |
| STAGE 5 | | | | | | | |
| MAIN STREET | 3891.0 | 966.0 | 4905.0 | | | | |
| SUBTOTAL | 3891.0 | 966.0 | 4905.0 | 0.0 | 0.0 | 0.0 | 0.0 |
| TOTAL | 37435 | 1623 | 25722 | 13368 | 1754 | 206 | 344 |
| | 78148 | | | | | | |

SCHOQ-08

MODEL: Default
FILE NAME: pw:\\mb-us-sw.bentley.com:mb-us-pw-03\Documents\Chicago IL\01 Projects\179740 IDOT Cedar\SHEA PHII\5.0 CADD\CAD Sheets\D468C55-sht-schedule08.dgn

Michael Baker INTERNATIONAL
200 W Adams Street
Suite 1800
Chicago, IL 60606
PH: 312.707.8770
FAX: 312.707.8804

| | | | |
|---|---|---|---|
| USER NAME = DLamb | DESIGNED - JL | REVISED - | |
| | DRAWN - DCL | REVISED - | |
| PLOT SCALE = 200.0000 ' / in. | CHECKED - RBB | REVISED - | |
| PLOT DATE = 6/6/2023 | DATE - 6/08/2023 | REVISED - | |

**STATE OF ILLINOIS**
**DEPARTMENT OF TRANSPORTATION**

**CEDAR ST. (IL-8/IL-116) OVER TZPR & IL-29**
**SCHEDULE OF QUANTITIES**

SCALE: NO SCALE | SHEET 8 OF 14 SHEETS | STA. TO STA.

| F.A.P. RTE. | SECTION | COUNTY | TOTAL SHEETS | SHEET NO. |
|---|---|---|---|---|
| VAR. | 13 (HVB, HB-3) 8R-1;R | TAZEWELL | 1173 | 59 |
| | | CONTRACT NO. 68C55 | | |
| | ILLINOIS | FED. AID PROJECT | | |

| STAGING TEMPORARY PAVEMENT MARKING REMOVAL | | | | | | | | |
|---|---|---|---|---|---|---|---|---|
| LOCATION | TEMPORARY PAVEMENT MARKING - LINE 4" - TYPE IV TAPE | | | | TEMPORARY PAVEMENT MARKING LINE 6" - TYPE IV TAPE | TEMPORARY PAVEMENT MARKING - LINE 12" - TYPE IV TAPE | TEMPORARY PAVEMENT MARKING LINE 24" - TYPE IV TAPE | 70300150 SHORT TERM PAVEMENT MARKING REMOVAL |
| | WHITE SOLID 4" | YELLOW SOLID 4" | DOUBLE YELLOW 4" | SKIP DASH WHITE 4" | TURN LANE & CROSSWALK | - | STOP BAR | |
| | SQ FT | | | | | | | |
| CEDAR ST. (IL-8/IL-116) OVER TZPR & IL-29 | | | | | | | | |
| STAGE 1 | | | | | | | | |
| MAIN STREET | 265.0 | 522.0 | | | | | | 787.0 |
| JOHNSON STREET | | | | | | | | 0.0 |
| PEKIN AVENUE | 51.0 | | | | | | | 51.0 |
| SILVER STREET | | | | | | | | 0.0 |
| SUBTOTAL | 316.0 | 522.0 | 0.0 | 0.0 | 0.0 | 0.0 | 0.0 | 838.0 |
| STAGE 2A | | | | | | | | |
| MAIN STREET | 86.0 | | | | | | | 86.0 |
| JOHNSON STREET | 43.0 | 54.0 | 121.0 | | | | 23.0 | 241.0 |
| PEKIN AVENUE | 32.0 | 22.0 | | | | | 26.0 | 80.0 |
| SILVER STREET | | | | | | | | 0.0 |
| SUBTOTAL | 161.0 | 76.0 | 121.0 | 0.0 | 0.0 | 0.0 | 49.0 | 407.0 |
| STAGE 2B | | | | | | | | |
| MAIN STREET | 1001.0 | 554.0 | 41.0 | | | | | 1596.0 |
| JOHNSON STREET | 24.0 | 106.0 | | | | | | 130.0 |
| PEKIN AVENUE | | 186.0 | | | | | 35.0 | 221.0 |
| SILVER STREET | | | | | | | | 0.0 |
| SUBTOTAL | 1025.0 | 846.0 | 41.0 | 0.0 | 0.0 | 0.0 | 35.0 | 1947.0 |
| STAGE 2C | | | | | | | | |
| MAIN STREET | 672.0 | 659.0 | 539.0 | | | 206.0 | | 2076.0 |
| JOHNSON STREET | 66.0 | 28.0 | 68.0 | | | | | 162.0 |
| PEKIN AVENUE | 92.0 | 50.0 | | | | | | 142.0 |
| SILVER STREET | | | | | | | | 0.0 |
| SUBTOTAL | 830.0 | 737.0 | 607.0 | 0.0 | 0.0 | 206.0 | 0.0 | 2380.0 |
| STAGE 2D | | | | | | | | |
| MAIN STREET | 318.0 | 642.0 | | 18.0 | 141.0 | | | 1119.0 |
| JOHNSON STREET | | | | | | | | 0.0 |
| PEKIN AVENUE | | | | | | | | 0.0 |
| SILVER STREET | | | | | | | | 0.0 |
| SUBTOTAL | 318.0 | 642.0 | 0.0 | 18.0 | 141.0 | 0.0 | 0.0 | 1119.0 |
| STAGE 3A | | | | | | | | |
| MAIN STREET | 989.0 | 496.0 | 652.0 | 14.0 | 43.0 | | 29.0 | 2223.0 |
| SUBTOTAL | 989.0 | 496.0 | 652.0 | 14.0 | 43.0 | 0.0 | 29.0 | 2223.0 |
| STAGE 3B | | | | | | | | |
| MAIN STREET | 460.0 | | | 12.0 | 43.0 | | | 515.0 |
| SUBTOTAL | 460.0 | 0.0 | 0.0 | 12.0 | 43.0 | 0.0 | 0.0 | 515.0 |
| STAGE 4A | | | | | | | | |
| MAIN STREET | 438.0 | 315.0 | | 8.0 | 49.0 | | 85.0 | 895.0 |
| SUBTOTAL | 438.0 | 315.0 | 0.0 | 8.0 | 49.0 | 0.0 | 85.0 | 895.0 |
| STAGE 4B | | | | | | | | |
| MAIN STREET | 762.0 | 1197.0 | 144.0 | 38.0 | 217.0 | | | 2358.0 |
| SUBTOTAL | 762.0 | 1197.0 | 144.0 | 38.0 | 217.0 | 0.0 | 0.0 | 2358.0 |
| STAGE 4C | | | | | | | | |
| MAIN STREET | 892.0 | 770.0 | 0.0 | 68.0 | 112.0 | | 86.0 | 1928.0 |
| SUBTOTAL | 892.0 | 770.0 | 0.0 | 68.0 | 112.0 | 0.0 | 86.0 | 1928.0 |
| STAGE 5 | | | | | | | | |
| MAIN STREET | 1298.0 | 1585.0 | 101.0 | 391.0 | 205.0 | | 96.0 | 3676.0 |
| JOHNSON STREET | | 41.0 | | | 63.0 | | 38.0 | 142.0 |
| PEKIN AVENUE | | 202.0 | | | 71.0 | | 55.0 | 328.0 |
| SILVER STREET | | | | | | | | 0.0 |
| SUBTOTAL | 1298.0 | 1828 | 101 | 391 | 339 | 0 | 189 | 4146.0 |
| | | | | | | | TOTAL | 18756 |

SCHOQ-09

MODEL: Default
FILE NAME: pw:\\mbi-is-pw.bienlley.com:mbi-is-pw-03\Documents\Chicago_IL\01 Projects\179740 IDOT CedarSIEx PhII\5.0 CADD\CAD Sheets\0468C55-sht-schedule09.dgn

Michael Baker INTERNATIONAL
200 W Adams Street
Suite 1850
Chicago, IL 60606
PH: 312.707.8770
FAX: 312.707.8804

| | | | |
|---|---|---|---|
| USER NAME = DLamb | DESIGNED - JL | REVISED - | |
| | DRAWN - DCL | REVISED - | |
| PLOT SCALE = 200.0000 ' / in. | CHECKED - RBB | REVISED - | |
| PLOT DATE = 6/6/2023 | DATE - 6/08/2023 | REVISED - | |

**STATE OF ILLINOIS**
**DEPARTMENT OF TRANSPORTATION**

**CEDAR ST. (IL-8/IL-116) OVER TZPR & IL-29**
**SCHEDULE OF QUANTITIES**

SCALE: NO SCALE | SHEET 9 OF 14 SHEETS | STA. TO STA.

| F.A.P. RTE. | SECTION | COUNTY | TOTAL SHEETS | SHEET NO. |
|---|---|---|---|---|
| VAR. | 13 (HVB, HB-3) BR-1;R | TAZEWELL | 1173 | 60 |

CONTRACT NO. 68C55

ILLINOIS | FED. AID PROJECT

## MAINTENANCE OF TRAFFIC

| LOCATION | OFFSET | SIDE | 70400100 TEMPORARY CONCRETE BARRIER | 70400200 RELOCATE TEMPORARY CONCRETE BARRIER | 70400125 PINNING TEMPORARY CONCRETE BARRIER | 78200011 BARRIER WALL REFLECTORS, TYPE C MONODIRECTIONAL CRYSTAL | 70600260 IMPACT ATTENUATORS, TEMPORARY (FULLY REDIRECTIVE, NARROW), TEST LEVEL 3 | 70600332 IMPACT ATTENUATORS, RELOCATE (FULLY REDIRECTIVE, NARROW), TEST LEVEL 3 | X7010216 TRAFFIC CONTROL AND PROTECTION, (SPECIAL) |
|---|---|---|---|---|---|---|---|---|---|
| | | | FOOT | | EACH | | | | L SUM |
| MAIN STREET (IL-29/US 24) | | | | | | | | | |
| TRAFFIC CONTROL | | | | | | | | | |
| PER TRAFFIC CONTROL AND STAGING PLAN | | | | | | | | | 1 |
| STAGE 1 | | | | | | | | | |
| | | | | | | | | | |
| | | | | | | | | | |
| | | | | | | | | | |
| SUBTOTAL | | | 0.0 | 0.0 | 0 | 0 | 0 | 0 | 0.0 |
| STAGE 2A | | | | | | | | | |
| 99+11.14 | 12.21' | | | | | | | | |
| MAIN STREET | | LT | 162.5 | | 26 | 7 | | | |
| 100+63.70 | 11.49' | | | | | | 1 | | |
| | | | | | | | | | |
| | | | | | | | | | |
| | | | | | | | | | |
| SUBTOTAL | | | 162.5 | 0.0 | 26 | 7 | 1 | 0 | 0.0 |
| STAGE 2B | | | | | | | | | |
| 30+15.60 | 13.20' | | | | | | | | |
| Johnson Street | | RT | 87.5 | | 14 | 4 | | | |
| 30+91.74 | 7.22' | | | | | | | | |
| 30+91.74 | 7.22' | RT | | | | | | | |
| Johnson Street | | | | 50.0 | | | | | |
| 31+28.37 | 0.00' | LT | | | | | | 1 | |
| 40+12.41 | 6.87' | | | | | | | | |
| PEKIN AVE | | RT | | 62.5 | 10 | | | | |
| 40+61.99 | 8.50' | | | | | | | | |
| 40+61.99 | 8.50' | | | | | | | | |
| PEKIN AVE | | RT | | 50.0 | | | | | |
| 41+01.26 | 0.66' | | | | | | 1 | | |
| SUBTOTAL | | | 87.5 | 162.5 | 24 | 4 | 1 | 1 | 0.0 |
| STAGE 2C | | | | | | | | | |
| 96+99.13 | 17.88' | | | | | | | | |
| MAIN STREET | | LT | 200.0 | | 32 | 8 | | | |
| 98+86.49 | 12.19' | | | | | | | 1 | |
| 101+14.11 | 2.95' | | | | | | | 1 | |
| MAIN STREET | | LT | 37.5 | | | 2 | | | |
| 101+49.53 | 0.00' | | | | | | | | |
| 101+49.53 | 0.00' | | | | | | | | |
| MAIN STREET | | LT | 225.0 | 87.5 | 50 | 9 | | | |
| 104+56.03 | 0.00' | | | | | | | | |
| 104+56.03 | 0.00' | | | | | | | | |
| MAIN STREET | | LT | | 162.5 | | | | | |
| 106+05.13 | 17.89' | | | | | | 1 | | |
| SUBTOTAL | | | 462.5 | 250.0 | 82 | 19 | 1 | 2 | 0.0 |
| STAGE 2D | | | | | | | | | |
| 97+00.09 | 21.17' | | | | | | | 1 | |
| MAIN STREET | | LT | | 462.5 | 74 | | | | |
| 101+49.48 | 15.50' | | | | | | | | |
| 97+14.00 | 13.09' | | | | | | | 1 | |
| MAIN STREET | | RT | 312.5 | 162.5 | | 13 | | | |
| 101+94.01 | 12.36' | | | | | | | | |
| 101+49.48 | 15.50' | | | | | | | | |
| MAIN STREET | | LT | | 87.5 | | | | | |
| 102+30.22 | 11.02' | | | | | | | 1 | |
| SUBTOTAL | | | 312.5 | 712.5 | 74 | 13 | 0 | 3 | 0.0 |
| STAGE 3A | | | | | | | | | |
| 96+99.31 | 0.83' | | | | | | 1 | | |
| MAIN STREET | | RT | | 125.0 | | | | | |
| 98+23.59 | 2.84' | | | | | | | 1 | |

## MAINTENANCE OF TRAFFIC

| LOCATION | OFFSET | SIDE | 70400100 TEMPORARY CONCRETE BARRIER | 70400200 RELOCATE TEMPORARY CONCRETE BARRIER | 70400125 PINNING TEMPORARY CONCRETE BARRIER | 78200011 BARRIER WALL REFLECTORS, TYPE C MONO-DIRECTIONAL CRYSTAL | 70600260 IMPACT ATTENUATORS, TEMPORARY (FULLY REDIRECTIVE, NARROW), TEST LEVEL 3 | 70600332 IMPACT ATTENUATORS, RELOCATE (FULLY REDIRECTIVE, NARROW), TEST LEVEL 3 | X7010216 TRAFFIC CONTROL AND PROTECTION, (SPECIAL) |
|---|---|---|---|---|---|---|---|---|---|
| | | | FOOT | | EACH | | | | L SUM |
| 102+13.96 | 3.66' | | | | | | | 1 | |
| MAIN STREET | | RT | | 500.0 | | | | | |
| 107+00.63 | 7.58' | | | | | | | 1 | |
| SUBTOTAL | | | 0.0 | 625.0 | 0 | 0 | 1 | 3 | 0.0 |
| STAGE 3B | | | | | | | | | |
| 98+06.16 | 26.94' | | | | | | | 1 | |
| MAIN STREET | | RT | | 900.0 | | | | | |
| 107+08.41 | 24.19' | | | | | | | 1 | |
| SUBTOTAL | | | 0.0 | 900.0 | 0 | 0 | 0 | 2 | 0.0 |
| STAGE 4A | | | | | | | | | |
| 110+72.12 | 3.88' | LT | | | | | | 1 | |
| MAIN STREET | | | 62.5 | | | 3 | | | |
| 111+23.46 | 4.50' | RT | | | | | | | |
| 111+23.46 | 4.50' | | | | | | | | |
| MAIN STREET | | RT | 162.5 | 1025.0 | 190 | 7 | | | |
| 123+00.59 | 2.48' | | | | | | | 1 | |
| SUBTOTAL | | | 225.0 | 1025.0 | 190 | 10 | 0 | 2 | 0.0 |
| STAGE 4B | | | | | | | | | |
| 104+13.58 | 3.18' | | | | | | | 1 | |
| MAIN STREET | | RT | | 787.5 | | | | | |
| 111+99.78 | 2.44' | | | | | | | 1 | |
| SUBTOTAL | | | 0.0 | 787.5 | 0 | 0 | 0 | 2 | 0.0 |
| STAGE 4C | | | | | | | | | |
| 116+95.85 | 3.50' | | | | | | | 1 | |
| MAIN STREET | | RT | | 675.0 | 126 | | | | |
| 123+63.95 | 4.33' | | | | | | | 1 | |
| SUBTOTAL | | | 0.0 | 675.0 | 126 | 0 | 0 | 2 | 0.0 |
| STAGE 5 | | | | | | | | | |
| | | | | | | | | | |
| | | | | | | | | | |
| | | | | | | | | | |
| SUBTOTAL | | | 0.0 | 0.0 | 0 | 0 | 0 | 0 | 0.0 |
| | | | | | | | | | |
| TOTAL | | | 1250.0 | 5137.5 | 522 | 53 | 4 | 17 | 1 |

SCHOO-10

MODEL: Default
FILE NAME: pw:\\mbi-us-pw.bakerhq.com:mbi-us-pw-03\Documents\Chicago IL\01 Projects\179740 IDOT Cedar\Sfx Phll5.0 CADD\CAD Sheets\0468C55-sht-schedule10.dgn

Michael Baker INTERNATIONAL
200 W Adams Street
Suite 1800
Chicago, IL 60606
P:+ 312.707.6970
FAX: 312.707.6604

| | | |
|---|---|---|
| USER NAME = DLamb | DESIGNED - JL | REVISED - |
| | DRAWN - DCL | REVISED - |
| PLOT SCALE = 200.0000 ' / in. | CHECKED - RBB | REVISED - |
| PLOT DATE = 6/6/2023 | DATE - 6/08/2023 | REVISED - |

**STATE OF ILLINOIS**
**DEPARTMENT OF TRANSPORTATION**

**CEDAR ST. (IL-8/IL-116) OVER TZPR & IL-29**
**SCHEDULE OF QUANTITIES**

SCALE: NO SCALE | SHEET 10 OF 14 SHEETS | STA. TO STA.

| F.A.P. RTE. | SECTION | COUNTY | TOTAL SHEETS | SHEET NO. |
|---|---|---|---|---|
| VAR. | 13 (HVB, HB-3) 8R-1;R | TAZEWELL | 1173 | 61 |
| | | CONTRACT NO. 68C55 | | |
| | ILLINOIS | FED. AID PROJECT | | |

| MAINTENANCE OF TRAFFIC (CLASS C PATCHES, TYPE IV, 8 INCH) | | | | | | | | |
|---|---|---|---|---|---|---|---|---|
| | | | | | | | | 44201335 |
| STAGE | STATION | OFFSET | LT/RT | STATION | OFFSET | LT/RT | AREA (SQFT) | SUBTOTALS (SQYD) |
| STAGE 1 | 99+91.76 | 40.18' | RT | 100+42.30 | 7.42' | LT | 887.20 | 99.0 |
| | 100+38.04 | 2.88' | RT | 101+63.20 | 48.50' | LT | 2723.88 | 303.0 |
| | 102+28.63 | 40.52' | LT | 102+34.46 | 3.10' | LT | 563.58 | 63.0 |
| | 102+35.80 | 5.78' | RT | 102+36.31 | 38.46' | RT | 451.94 | 51.0 |
| | 104+68.10 | 29.06' | LT | 104+68.96 | 31.13' | RT | 911.09 | 102.0 |
| | 108+15.58 | 24.44' | RT | 109+16.71 | 24.22' | RT | 1003.53 | 112.0 |
| | 109+24.71 | 29.44' | LT | 109+24.71 | 32.57' | RT | 992.20 | 111.0 |
| | 110+00.00 | 29.21' | LT | 110+00.00 | 32.81' | RT | 992.20 | 111.0 |
| SUBTOTAL | | | | | | | | 952.0 |
| STAGE 2A | 100+37.00 | 13.74' | LT | 100+37.01 | 7.13' | LT | 69.86 | 8.0 |
| SUBTOTAL | | | | | | | | 8.0 |
| STAGE 2D | 21+50.10 | 31.31' | RT | 21+73.06 | 22.11' | RT | 644.74 | 72.0 |
| | 98+63.02 | 6.62' | RT | 98+64.14 | 34.16' | RT | 275.57 | 31.0 |
| SUBTOTAL | | | | | | | | 103.0 |
| | | | | | | | | |
| | | | | | | | TOTAL | 1063 |
| | | | | | | | | |

| MAINTENANCE OF TRAFFIC (TEMPORARY PAVEMENT REMOVAL) | | | | | | | | |
|---|---|---|---|---|---|---|---|---|
| | | | | | | | | X4400110 |
| STAGE | STATION | OFFSET | LT/RT | STATION | OFFSET | LT/RT | AREA (SQFT) | SUBTOTALS (SQYD) |
| STAGE 1 | | | | | | | | 0.0 |
| SUBTOTAL | | | | | | | | 0.0 |
| STAGE 2A | 30+30.74 | 5.57' | RT | 30+44.36 | 5.50' | RT | 62.01 | 7.0 |
| SUBTOTAL | | | | | | | | 7.0 |
| STAGE 2B | 30+30.74 | 5.57' | RT | 30+44.36 | 5.50' | RT | 114.14 | 13.0 |
| SUBTOTAL | | | | | | | | 13.0 |
| STAGE 2C | 30+38.63 | 19.14' | LT | 30+78.59 | 14.61' | LT | 254.74 | 29.0 |
| | 101+00.03 | 84.86' | LT | 101+63.20 | 48.50' | LT | 1458.48 | 162.0 |
| | 102+28.63 | 40.52' | LT | 102+34.46 | 3.10' | LT | 563.58 | 63.0 |
| SUBTOTAL | | | | | | | | 254.0 |
| STAGE 2D | 30+62.03 | 21.83' | RT | 30+98.06 | 15.18' | RT | 220.36 | 25.0 |
| | 98+13.51 | 2.88' | RT | 99+89.13 | 2.36' | LT | 985.59 | 110.0 |
| | 98+78.03 | 2.57' | LT | 99+37.62 | 2.83' | LT | 532.43 | 60.0 |
| | 99+37.62 | 2.83' | LT | 99+74.60 | 2.61' | LT | 353.98 | 40.0 |
| | 99+90.24 | 16.43' | RT | 100+44.33 | 13.81' | LT | 722.41 | 81.0 |
| | 100+38.94 | 2.86' | RT | 101+48.65 | 14.00' | LT | 1265.40 | 141.0 |
| | 100+42.30 | 7.42' | LT | 100+76.82 | 5.70' | LT | 278.92 | 31.0 |
| | 100+76.82 | 5.70' | LT | 100+98.91 | 5.69' | LT | 150.09 | 17.0 |
| | 101+11.49 | 4.78' | RT | 101+49.16 | 3.84' | RT | 229.63 | 26.0 |
| SUBTOTAL | | | | | | | | 531.0 |
| STAGE 3A | 21+50.10 | 31.31' | RT | 0+21.73 | 22.11' | RT | 644.74 | 72.0 |
| | 98+63.02 | 6.62' | RT | 98+64.14 | 34.16' | RT | 275.57 | 31.0 |
| | 99+95.41 | 16.50' | RT | 99+97.13 | 39.93' | RT | 234.74 | 26.0 |
| | 101+48.98 | 2.62' | LT | 102+00.00 | 3.03' | LT | 625.75 | 70.0 |
| | 102+35.80 | 5.78' | RT | 102+36.31 | 38.46' | RT | 451.94 | 50.0 |
| SUBTOTAL | | | | | | | | 249.0 |
| STAGE 4B | 104+71.16 | 29.23' | LT | 104+71.16 | 2.52' | LT | 798.03 | 89.0 |
| | 104+63.48 | 2.49' | LT | 108+86.35 | 2.41' | LT | 1411.20 | 157.0 |
| | 104+68.10 | 29.06' | LT | 104+68.17 | 2.02' | RT | 478.46 | 54.0 |
| | 109+24.71 | 29.44' | LT | 109+24.71 | 2.00' | RT | 503.06 | 56.0 |
| | 110+00.00 | 29.21' | LT | 110+00.00 | 2.00' | RT | 499.31 | 56.0 |
| SUBTOTAL | | | | | | | | 412.0 |
| STAGE 4C | 104+63.56 | 32.34' | RT | 110+20.11 | 31.55' | RT | 3886.99 | 432.0 |
| | 104+78.42 | 25.38' | RT | 104+79.83 | 1.14' | RT | 729.86 | 82.0 |
| | 113+60.55 | 39.72' | RT | 121+96.70 | 30.71' | RT | 5770.70 | 642.0 |
| | 104+68.55 | 2.06' | RT | 104+98.96 | 31.13' | RT | 432.15 | 49.0 |
| | 108+15.58 | 24.44' | RT | 109+16.71 | 24.22' | RT | 1003.53 | 112.0 |
| | 109+24.71 | 2.00' | RT | 109+24.74 | 32.59' | RT | 489.42 | 55.0 |
| | 110+00.00 | 2.00' | RT | 110+00.00 | 31.55' | RT | 492.88 | 55.0 |
| SUBTOTAL | | | | | | | | 1427.0 |
| STAGE 5 | 102+00.02 | 7.59' | RT | 104+60.98 | 1.52' | RT | 1557.74 | 173.0 |
| SUBTOTAL | | | | | | | | 173.0 |
| | | | | | | | | |
| | | | | | | | TOTAL | 3066 |
| | | | | | | | | |

| MAINTENANCE OF TRAFFIC (TEMPORARY PAVEMENT) | | | | | | | | |
|---|---|---|---|---|---|---|---|---|
| | | | | | | | | Z0062456 |
| STAGE | STATION | OFFSET | LT/RT | STATION | OFFSET | LT/RT | AREA (SQFT) | SUBTOTALS (SQYD) |
| STAGE 1 | 30+30.54 | 4.75' | RT | 30+45.21 | 3.04' | RT | 176.15 | 20.0 |
| | 30+38.63 | 10.14' | LT | 30+78.59 | 14.61' | LT | 254.74 | 29.0 |
| | 98+13.51 | 2.88' | RT | 99+89.13 | 2.36' | LT | 985.59 | 110.0 |
| | 101+11.49 | 4.78' | RT | 104+60.98 | 1.52' | RT | 2413.12 | 269.0 |
| SUBTOTAL | | | | | | | | 428.0 |
| STAGE 2A | 30+62.03 | 21.83' | RT | 30+98.06 | 15.18' | RT | 220.36 | 25.0 |
| SUBTOTAL | | | | | | | | 25.0 |
| STAGE 2B | 99+37.63 | 2.79' | LT | 99+74.60 | 2.61' | LT | 353.98 | 40.0 |
| | 100+42.30 | 7.42' | LT | 100+76.83 | 5.67' | LT | 278.92 | 31.0 |
| SUBTOTAL | | | | | | | | 71.0 |
| STAGE 2C | 98+78.03 | 2.57' | LT | 99+37.62 | 2.83' | LT | 532.43 | 60.0 |
| | 100+98.91 | 5.69' | LT | 100+96.82 | 5.70' | LT | 150.09 | 17.0 |
| SUBTOTAL | | | | | | | | 77.0 |
| STAGE 2D | 104+71.16 | 2.52' | LT | 104+71.16 | 29.23' | LT | 798.03 | 89.0 |
| SUBTOTAL | | | | | | | | 89.0 |
| STAGE 3A | 104+78.42 | 25.38' | RT | 104+79.83 | 1.14' | RT | 729.86 | 82.0 |
| SUBTOTAL | | | | | | | | 82.0 |
| STAGE 3B | 104+63.48 | 2.49' | LT | 108+86.35 | 2.41' | LT | 1411.20 | 157.0 |
| | 104+63.56 | 32.34' | RT | 110+20.11 | 31.55' | RT | 3886.99 | 432.0 |
| | 113+60.55 | 39.72' | RT | 121+96.70 | 30.71' | RT | 5770.70 | 642.0 |
| SUBTOTAL | | | | | | | | 1231.0 |
| | | | | | | | | |
| | | | | | | | TOTAL | 2003 |
| | | | | | | | | |

| DRAINAGE STRUCTURE ADJUSTMENT (SPECIAL) | | | | |
|---|---|---|---|---|
| | | | | Z0018100 |
| STAGE | STATION | OFFSET | LT/RT | SUBTOTALS (EACH) |
| STAGE 1 | 99+94.15 | 2.0 | LT | 1.0 |
| | 100+35.30 | 2.0 | LT | 1.0 |
| | 101+42.07 | 2.0 | LT | 1.0 |
| | 102+36.10 | 4.7 | RT | 1.0 |
| | 104+69.67 | 1.4 | RT | 1.0 |
| SUBTOTAL | | | | 5.0 |
| | | | | |
| | | | TOTAL | 5 |

SCHOO-11

Michael Baker INTERNATIONAL
200 W Adams Street
Suite 1800
Chicago, IL 60606
PH: 312.707.8772
FAX: 312.707.8804

| | | | |
|---|---|---|---|
| USER NAME = Winson.Teng | DESIGNED - JL | REVISED - | |
| | DRAWN - DCL | REVISED - | |
| PLOT SCALE = 200.0000 ' / in. | CHECKED - RBB | REVISED - | |
| PLOT DATE = 5/1/2025 | DATE - 4/08/2025 | REVISED - | |

**STATE OF ILLINOIS**
**DEPARTMENT OF TRANSPORTATION**

**CEDAR ST. (IL-8/IL-116) OVER TZPR & IL-29**
**SCHEDULE OF QUANTITIES**

SCALE: NO SCALE | SHEET 11 OF 14 SHEETS | STA. TO STA.

| F.A.P. RTE. | SECTION | COUNTY | TOTAL SHEETS | SHEET NO. |
|---|---|---|---|---|
| VAR. | 13 (HVB, HB-3) BR-1;R | TAZEWELL | 1173 | 62 |
| | | CONTRACT NO. 68C55 | | |
| | ILLINOIS | FED. AID PROJECT | | |

| PAVEMENT MARKING REMOVAL - WATER BLASTING SCHEDULE | | | | | | |
|---|---|---|---|---|---|---|
| LOCATION | 78300202 - PAVEMENT MARKING REMOVAL - WATERBLASTING | | | | | |
| | LETTERS & SYMBOLS | LINE 4" | LINE 6" | LINE 8" | LINE 12" | LINE 24" |
| STATION TO STATION | SQFT | | | | | |
| MAIN STREET | | | | | | |
| 92+18.00 TO 95+70.00 | 72.0 | 465.0 | 179.0 | 510.0 | | 183.0 |
| 95+70.00 TO 102+85.45 | 54.0 | 552.0 | 233.0 | 303.0 | | 96.0 |
| 102+85.45 TO 109+09.24 | | 669.0 | 157.0 | 67.0 | | |
| 109+09.24 TO 116+97.30 | 36.0 | 1041.0 | 201.0 | 131.0 | 215.0 | |
| 116+97.30 TO 123+92.72 | 71.0 | 993.0 | 174.0 | 84.0 | | |
| 123+92.72 TO 136+32.20 | 88.0 | 1856.0 | 319.0 | | | |
| SUBTOTAL | 321.0 | 5576.0 | 1263.0 | 1095.0 | 215.0 | 279.0 |
| CEDAR STREET | | | | | | |
| 67+67.40 TO 88+59.95 | | | | | | |
| SUBTOTAL | | | | | | |
| RAMP A | | | | | | |
| 188+59.95 TO 195+39.79 | | | | | | |
| SUBTOTAL | | | | | | |
| RAMP B | | | | | | |
| 288+59.95 TO 301+03.19 | | | | | | |
| SUBTOTAL | | | | | | |
| RAMP C | | | | | | |
| 300+52.62 TO 319+21.67 | | | | | | |
| SUBTOTAL | | | | | | |
| RAMP D | | | | | | |
| 400+00.00 TO 413+41.74 | | | | | | |
| SUBTOTAL | | | | | | |
| SIDE ROADS | | | | | | |
| PEKIN AVE | 36.0 | 134.0 | | 133.0 | | 45.0 |
| JOHNSON ST | | | | | | 32.0 |
| SILVER ST | | | | | | |
| SUBTOTAL | 36.0 | 134.0 | | 133.0 | | 77.0 |
| | | | | | | |
| | | | | | | |
| SUB-TOTAL | 357 | 5710 | 1263 | 1228 | 215 | 356 |
| GRAND TOTAL | 9129 | | | | | |

PAVEMENT MARKING SCHEDULE

| LOCATION | LENGTH | 78008300 | 78008330 | | | | | 78008340 | | 78008350 | | 78008370 | 78100100 | | | 78011035 | 78011045 | 78011065 | 78011125 | 78011000 |
|---|---|---|---|---|---|---|---|---|---|---|---|---|---|---|---|---|---|---|---|---|
| | | POLYUREA PAVEMENT MARKING TYPE II | | | | | | | | | | | RAISED REFLECTIVE PAVEMENT MARKER | | | GROOVING FOR RECESSED PAVEMENT MARKING 7" | GROOVING FOR RECESSED PAVEMENT MARKING 9" | GROOVING FOR RECESSED PAVEMENT MARKING 13" | GROOVING FOR RECESSED PAVEMENT MARKING 25" | GROOVING FOR RECESSED PAVEMENT MARKING LETTERS & SYMBOLS |
| | | LETTERS & SYMBOLS | LINE 6" | | | | | LINE 8" | | LINE 12" | | LINE 24" | | | | | | | | |
| | | WHITE SOLID | YELLOW SOLID | DOUBLE YELLOW | SKIP DASH YELLOW | WHITE SOLID | WHITE SKIP DASH | WHITE SOLID | WHITE SKIP DASH | WHITE SOLID | YELLOW SOLID | WHITE SOLID | CRYSTAL, ONE-WAY | AMBER, ONE-WAY | AMBER, TWO-WAY | | | | | |
| STATION TO STATION | FOOT | SQFT | FOOT | | | | | | | | | | EACH | | | FOOT | | | | SQ FT |
| MAIN STREET | | | | | | | | | | | | | | | | | | | | |
| 92+18.00 TO 95+70.00 | 352.0 | 124.8 | | 918.8 | | 825.1 | 180.0 | 843.0 | 73.0 | | | 112.0 | 9.0 | | | 1923.9 | 916.0 | | 112.0 | 134.3 |
| 97+00.00 TO 102+85.45 | 585.5 | 93.6 | 677.0 | 634.0 | | 590.0 | 292.0 | 718.0 | 116.0 | 308.0 | | 80.0 | 23.0 | | | 2193.0 | 834.0 | 308.0 | 80.0 | 100.8 |
| 102+85.45 TO 109+09.24 | 623.8 | | 1249.0 | | | 116.0 | 313.0 | 807.0 | 95.0 | 42.0 | | | 21.0 | | | 1678.0 | 902.0 | 42.0 | | |
| 109+09.24 TO 116+97.30 | 788.1 | | 1578.0 | | | 317.0 | 396.0 | 842.0 | 118.0 | 327.0 | | | 42.0 | | | 2291.0 | 960.0 | 327.0 | | |
| 116+97.30 TO 123+92.72 | 695.4 | 93.6 | 548.0 | 1690.0 | 138.0 | 797.0 | 348.0 | 84.0 | 107.0 | | 59.0 | | 18.0 | | 14.0 | 3521.0 | 191.0 | 59.0 | | 100.8 |
| 123+93.72 TO 136+32.2 | 1238.5 | 140.4 | 2272.0 | 430.0 | 549.3 | 2395.0 | 621.0 | | | | | | 31.0 | | 31.0 | 6267.3 | | | | 151.1 |
| SUBTOTAL | | 452.4 | 6324.0 | 3672.8 | 687.3 | 5040.1 | 2150.0 | 3294.0 | 509.0 | 677.0 | 59.0 | 192.0 | 144.0 | | 45.0 | 17874.2 | 3803.0 | 736.0 | 192.0 | 487.0 |
| CEDAR STREET | | | | | | | | | | | | | | | | | | | | |
| 67+67.40 TO 74+01.18 | 633.8 | | 1268.0 | | | 1269.0 | 227.0 | | 163.0 | | | | 12.0 | | | 2764.0 | 163.0 | | | |
| 74+01.18 TO 85+58.22 (CEDAR ST BRIDGE) | 1157.0 | | 2314.0 | | | 1369.0 | 36.0 | 807.0 | | 533.0 | | | | | | 3719.0 | 807.0 | 533.0 | | |
| 85+58.22 TO 88+59.95 | 301.7 | | 605.0 | | | 604.0 | | | | | | | | | | 1209.0 | | | | |
| SUBTOTAL | | | 4187.0 | | | 3242.0 | 263.0 | 807.0 | 163.0 | 533.0 | | | 12.0 | | | 7692.0 | 970.0 | 533.0 | | |
| RAMP A | | | | | | | | | | | | | | | | | | | | |
| 188+59.95 TO 190+61.17 | 201.2 | | 217.0 | | | 202.0 | | 21.0 | | | | | | | | 419.0 | 21.0 | | | |
| 190+61.17 TO 195+39.79 | 478.6 | | | | | 479.0 | | 157.0 | | | | | 5.0 | | | 479.0 | 157.0 | | | |
| SUBTOTAL | | | 217.0 | | | 681.0 | | 178.0 | | | | | 5.0 | | | 898.0 | 178.0 | | | |
| RAMP B | | | | | | | | | | | | | | | | | | | | |
| 288+59.95 TP 294+65.43 | 605.5 | | 348.0 | | | 606.0 | | 268.0 | | | | | 7.0 | | | 954.0 | 268.0 | | | |
| 294+65.43 TO 301+03.19 | 637.8 | | | | | 638.0 | | 213.0 | | | | | 6.0 | | | 638.0 | 213.0 | | | |
| SUBTOTAL | | | 348.0 | | | 1244.0 | | 481.0 | | | | | 13.0 | | | 1592.0 | 481.0 | | | |
| RAMP C | | | | | | | | | | | | | | | | | | | | |
| 300+52.62 TO 309+59.75 (RAMP C BRIDGE) | 907.1 | | 539.0 | | | 908.0 | | 388.0 | | | | | | | | 1447.0 | 388.0 | | | |
| 309+59.75 TO 312+55.45 | 295.7 | | 56.0 | | | 296.0 | | 248.0 | | | | | 6.0 | | | 352.0 | 248.0 | | | |
| 312+55.45 TO 319+21.67 | 666.2 | | | | | 662.0 | | 191.0 | | | | | 5.0 | | | 662.0 | 191.0 | | | |
| SUBTOTAL | | | 595.0 | | | 1866.0 | | 827.0 | | | | | 11.0 | | | 2461.0 | 827.0 | | | |
| RAMP D | | | | | | | | | | | | | | | | | | | | |
| 400+00.00 TO 407+80.52 (RAMP D BRIDGE ) | 780.5 | | 295.0 | | | 845.0 | | 419.0 | | | | | | | | 1140.0 | 419.0 | | | |
| 407+80.52 TO 411+70.36 | 389.8 | | 219.0 | | | 390.0 | | 183.0 | | | | | 5.0 | | | 609.0 | 183.0 | | | |
| 411+70.36 TO 413+41.74 | 171.4 | | | | | 233.0 | | 112.0 | | | | | 3.0 | | | 233.0 | 112.0 | | | |
| SUBTOTAL | | | 514.0 | | | 1468.0 | | 714.0 | | | | | 8.0 | | | 1982.0 | 714.0 | | | |
| SIDE ROADS | | | | | | | | | | | | | | | | | | | | |
| PEKIN AVE | | 31.2 | | | | | | | | | 104.0 | | | | | | | 104.0 | | 33.6 |
| JOHNSON ST | | 15.6 | | | | | | | | | | | | | | | | | | 16.8 |
| SILVER ST | | 31.2 | 581.8 | | | 120.0 | | | | | 60.0 | 22.0 | | | | 701.8 | | 60.0 | 22.0 | 33.6 |
| SUBTOTAL | | 78.0 | 581.8 | | | 120.0 | | | | | 164.0 | 22.0 | | | | 701.8 | | 164.0 | 22.0 | 84.0 |
| | | | | | | | | | | | | | | | | | | | | |
| | | | | | | | | | | | | | | | | | | | | |
| TOTAL | | 530 | 12767 | 3673 | 687 | 13661 | 2413 | 6301 | 672 | 1210 | 223 | 214 | 193 | | 45 | 33201.0 | 6973 | 1433 | 214.0 | 571.0 |
| | | | 30788 | | | | | 6973 | | 1433 | | | 238 | | | | | | | |

MODEL: Default
FILE NAME: pw:\\ms-us-cw.bentley.com:ms-us-pw-03\Documents\Chicago IL\01 Projects\179740 IDOT Cedar\Sfxt Plan\5.0 CADD\CAD Sheets\D468C55-sht-schedule13.dgn

Michael Baker INTERNATIONAL
200 W Adams Street
Suite 1800
Chicago, IL 60606
P:+312.707.8770
FAX: 312.707.8804

| | | | |
|---|---|---|---|
| USER NAME = Winsen.Teng | DESIGNED - LEW | REVISED - | |
| | DRAWN - LEW | REVISED - | |
| PLOT SCALE = 200.0000 ' / in. | CHECKED - SJM | REVISED - | |
| PLOT DATE = 5/1/2025 | DATE - 4/08/2025 | REVISED - | |

**STATE OF ILLINOIS**
**DEPARTMENT OF TRANSPORTATION**

**CEDAR ST. (IL-8/IL-116) OVER TZPR & IL-29**
**SCHEDULE OF QUANTITIES**

SCALE: NO SCALE | SHEET 13 OF 14 SHEETS | STA. TO STA.

SCHOO-13

| F.A.P. RTE. | SECTION | COUNTY | TOTAL SHEETS | SHEET NO. |
|---|---|---|---|---|
| VAR. | 13 (HVB, HB-3) BR-1;R | TAZEWELL | 1173 | 64 |

CONTRACT NO. 68C55

ILLINOIS | FED. AID PROJECT

## LANDSCAPE SCHEDULE

| | | | 25000300 | 25000322 | 25000400 | 25000500 | 25000600 | 25000750 | X2511630 | 25200110 | 25200200 |
|---|---|---|---|---|---|---|---|---|---|---|---|
| | | | SEEDING, CLASS 3 | SEEDING, CLASS 5A | NITROGEN FERTILIZER NUTRIENT | PHOSPHORUS FERTILIZER NUTRIENT | POTASSIUM FERTILIZER NUTRIENT | MOWING | EROSION CONTROL BLANKET (SPECIAL) | SODDING, SALT TOLERANT | SUPPLEMENTAL WATERING |
| BEGIN STATION | END STATION | OS | ACRE | ACRE | POUND | POUND | POUND | ACRE | SQ YD | SQ YD | UNIT |
| CEDAR ST (IL-8 / IL-116) | | | | | | | | | | | |
| 67+67.3 | 75+61.9 | LT | 0.2 | | 18.3 | 18.3 | 18.3 | 1.3 | 983.7 | | |
| 67+67.4 | 75+40.7 | RT | 0.2 | | 17.4 | 17.4 | 17.4 | 1.3 | 937.9 | | |
| 73+72.7 | 75+46.7 | LT | | 0.1 | 12.3 | 12.3 | 12.3 | 0.9 | 660.2 | | |
| 73+43.5 | 75+35.5 | RT | | 0.2 | 13.9 | 13.9 | 13.9 | 1 | 745.3 | | |
| 75+35.7 | 75+80.7 | LT/RT | 0.1 | | 8.3 | 8.3 | 8.3 | 0.6 | 448.9 | | |
| 81+10.9 | 81+63.1 | LT/RT | 0.2 | | 16.3 | 16.3 | 16.3 | 1.2 | 876.7 | | |
| 83+99.3 | 88+59.9 | LT | 0.3 | | 27.7 | 27.7 | 27.7 | 2 | 1,488.1 | | |
| | | | | | | | | | | | |
| MAIN ST (US-24/IL-29) | | | | | | | | | | | |
| 96+99.9 | 98+94.9 | LT | | | | | | | | 98.4 | 0.2 |
| 99+36.5 | 100+64.0 | LT | | | | | | | | 156.1 | 0.31 |
| 101+16.9 | 102+54.9 | LT | | | | | | | | 124.9 | 0.25 |
| 103+00.2 | 104+74.2 | LT | | | | | | | | 322.4 | 0.64 |
| 97+00.0 | 98+27.9 | RT | | | | | | | | 238.2 | 0.48 |
| 98+55.1 | 103+76.1 | RT | | | | | | | | 1,994.0 | 3.99 |
| 103+15.9 | 108+73.8 | RT | 0.4 | | 40.3 | 40.3 | 40.3 | 3 | 2,166.2 | | |
| 103+97.0 | 105+18.6 | RT | | 0.1 | 12.2 | 12.2 | 12.2 | 0.9 | 658.2 | | |
| 106+05.6 | 107+94.4 | RT | | 0.3 | 24.9 | 24.9 | 24.9 | 1.8 | 1,339.3 | | |
| 104+75.6 | 106+11.2 | LT | | 0.1 | 9.2 | 9.2 | 9.2 | 0.7 | 495.8 | | |
| 106+15.4 | 109+22.4 | LT | | 0.7 | 62.4 | 62.4 | 62.4 | 4.6 | 3,356.2 | | |
| 105+94.7 | 109+37.7 | LT | 0.3 | | 24.4 | 24.4 | 24.4 | 1.8 | 1,310.2 | | |
| 109+19.8 | 111+91.1 | LT | 0.2 | | 19.3 | 19.3 | 19.3 | 1.4 | 1,037.1 | | |
| 109+52.4 | 111+38.0 | LT | | 0.3 | 27.8 | 27.8 | 27.8 | 1.2 | 1,485.2 | | |
| 112+90.3 | 115+88.1 | LT | | 0.4 | 41.3 | 41.3 | 41.3 | 2.2 | 2,209.1 | | |
| 115+88.1 | 117+11.7 | LT | | 0.3 | 29.8 | 29.8 | 29.8 | 2.2 | 1,602.7 | | |
| 119+00.8 | 121+22.3 | LT | | 0.4 | 34 | 34 | 34 | 2.5 | 1,829.6 | | |
| 107+11.4 | 123+78.6 | RT | 0.6 | | 53.7 | 53.7 | 53.7 | 3.9 | 2,847.6 | | |
| 107+41.1 | 123+63.8 | RT | | 1.3 | 117.8 | 117.8 | 117.8 | 8.7 | 6,322.5 | | |
| 121+19.4 | 123+33.3 | LT | | | | | | | | 224.9 | 0.45 |
| | | | | | | | | | | | |
| RAMP B | | | | | | | | | | | |
| 288+60.0 | 301+03.2 | LT | 0.4 | | 39.6 | 39.6 | 39.6 | 2.9 | 2,127.4 | | |
| | | | | | | | | | | | |
| RAMP C | | | | | | | | | | | |
| 307+87.5 | 308+66.3 | LT/RT | 0.1 | | 4 | 4 | 4 | 0.4 | 323.4 | | |
| | | | | | | | | | | | |
| RAMP D | | | | | | | | | | | |
| 406+36.8 | 412+38.9 | LT | 0.2 | | 15.9 | 15.9 | 15.9 | 1.2 | 804.4 | | |
| 406+41.8 | 408+81.9 | LT | | 0.2 | 17.2 | 17.2 | 17.2 | 1.3 | 922.3 | | |
| | | | | | | | | | | | |
| TOTAL | | | 3.25 | 4.50 | 688 | 688 | 688 | 49 | 36978 | 3159 | 7 |

## LANDSCAPE SCHEDULE

| | | 25000775 |
|---|---|---|
| | | SELECTIVE MOWING STAKES |
| STATION | OS | EACH |
| CEDAR ST (IL-8 / IL-116) | | |
| 73+72.2 | LT | 1.0 |
| 75+46.6 | LT | 1.0 |
| 73+43.5 | RT | 1.0 |
| 75+35.5 | RT | 1.0 |
| 80+98.5 | LT | 1.0 |
| 81+83.9 | LT | 1.0 |
| 81+83.9 | LT | 1.0 |
| 82+02.1 | RT | 1.0 |
| 81+54.1 | RT | 1.0 |
| | | |
| MAIN ST (US-24/IL-29) | | |
| 103+76.2 | RT | 1.0 |
| 103+97.0 | RT | 1.0 |
| 104+75.6 | LT | 1.0 |
| 105+18.5 | RT | 1.0 |
| 105+22.3 | LT | 1.0 |
| 106+04.6 | RT | 1.0 |
| 106+11.0 | LT | 1.0 |
| 106+15.3 | LT | 1.0 |
| 107+94.5 | RT | 1.0 |
| 107+26.7 | LT | 1.0 |
| 108+64.3 | LT | 1.0 |
| 109+09.7 | LT | 1.0 |
| 109+82.5 | LT | 1.0 |
| 109+52.4 | LT | 1.0 |
| 111+38.0 | LT | 1.0 |
| 112+90.2 | LT | 1.0 |
| 112+87.7 | RT | 1.0 |
| 112+87.7 | RT | 1.0 |
| 115+88.6 | LT | 1.0 |
| 117+11.8 | LT | 1.0 |
| 119+00.8 | LT | 1.0 |
| 121+22.3 | LT | 1.0 |
| 123+18.5 | RT | 1.0 |
| 123+63.5 | RT | 1.0 |
| TOTAL | | 33 |

## TREES SCHEDULE

| | | A2007016 | B20018G5 | D2001789 |
|---|---|---|---|---|
| | | TREE, QUERCUS ROBUR FASTIGIATA (FASTIGIATE ENGLISH OAK), 2" CALIPER, BALLED AND BURLAPPED | TREE, SYRINGA RETICULATA (JAPANESE TREE LILAC), CONTAINER GROWN, 5-GALLON | EVERGREEN, PICEA ABIES (NORWAY SPRUCE), 10' HEIGHT, BALLED AND BURLAPPED |
| STATION | OS | EACH | EACH | EACH |
| MAIN ST (US-24/IL-29) | | | | |
| 114+65.8 | RT | | | 1.0 |
| 114+75.2 | RT | | | 1.0 |
| 114+83.7 | RT | | | 1.0 |
| 114+92.3 | RT | | | 1.0 |
| 115+01.6 | RT | | | 1.0 |
| 115+10.9 | RT | | | 1.0 |
| 115+19.5 | RT | | | 1.0 |
| 115+28.0 | RT | | 1.0 | |
| 115+37.3 | RT | | 1.0 | |
| 115+46.6 | RT | | 1.0 | |
| 115+55.2 | RT | | 1.0 | |
| 115+63.7 | RT | | 1.0 | |
| 115+73.1 | RT | | 1.0 | |
| 115+82.4 | RT | | 1.0 | |
| 119+76.5 | LT | 1.0 | | |
| 119+85.1 | LT | 1.0 | | |
| 119+93.6 | LT | 1.0 | | |
| 120+02.9 | LT | 1.0 | | |
| 120+12.2 | LT | 1.0 | | |
| 120+20.8 | LT | 1.0 | | |
| 120+29.3 | LT | 1.0 | | |
| 120+38.6 | LT | 1.0 | | |
| 120+48.0 | LT | 1.0 | | |
| 120+56.5 | LT | 1.0 | | |
| 120+65.0 | LT | 1.0 | | |
| 120+74.4 | LT | 1.0 | | |
| 120+83.7 | LT | 1.0 | | |
| 120+92.2 | LT | 1.0 | | |
| 121+00.8 | LT | 1.0 | | |
| 121+10.1 | LT | 1.0 | | |
| 121+19.4 | LT | 1.0 | | |
| TOTAL | | 17 | 7 | 7 |

SCHOO-14

Michael Baker INTERNATIONAL
200 W Adams Street
Suite 1800
Chicago, IL 60606
P: 312.707.6970
FAX: 312.707.6604

| | | | |
|---|---|---|---|
| USER NAME = Winson.Teng | DESIGNED - LEW | REVISED - | |
| | DRAWN - LEW | REVISED - | |
| PLOT SCALE = 200.0000 ' / in. | CHECKED - SJM | REVISED - | |
| PLOT DATE = 5/1/2025 | DATE - 4/08/2025 | REVISED - | |

**STATE OF ILLINOIS**
**DEPARTMENT OF TRANSPORTATION**

**CEDAR ST. (IL-8/IL-116) OVER TZPR & IL-29**
**SCHEDULE OF QUANTITIES**

SCALE: NO SCALE | SHEET 14 OF 14 SHEETS | STA. TO STA.

| F.A.P. RTE. | SECTION | COUNTY | TOTAL SHEETS | SHEET NO. |
|---|---|---|---|---|
| VAR. | 13 (HVB, HB-3) BR-1;R | TAZEWELL | 1173 | 65 |

CONTRACT NO. 68C55

ILLINOIS | FED. AID PROJECT

MODEL: Default
FILE NAME: pw:\\mi-us-pw.bakerhex.com:mi-us-pw-03\Documents\Chicago IL\01 Projects\179740 IDOT CedarSt\Ext Phl15.0 CADD\CAD Sheets\0468C55-lin-schedule14.dgn

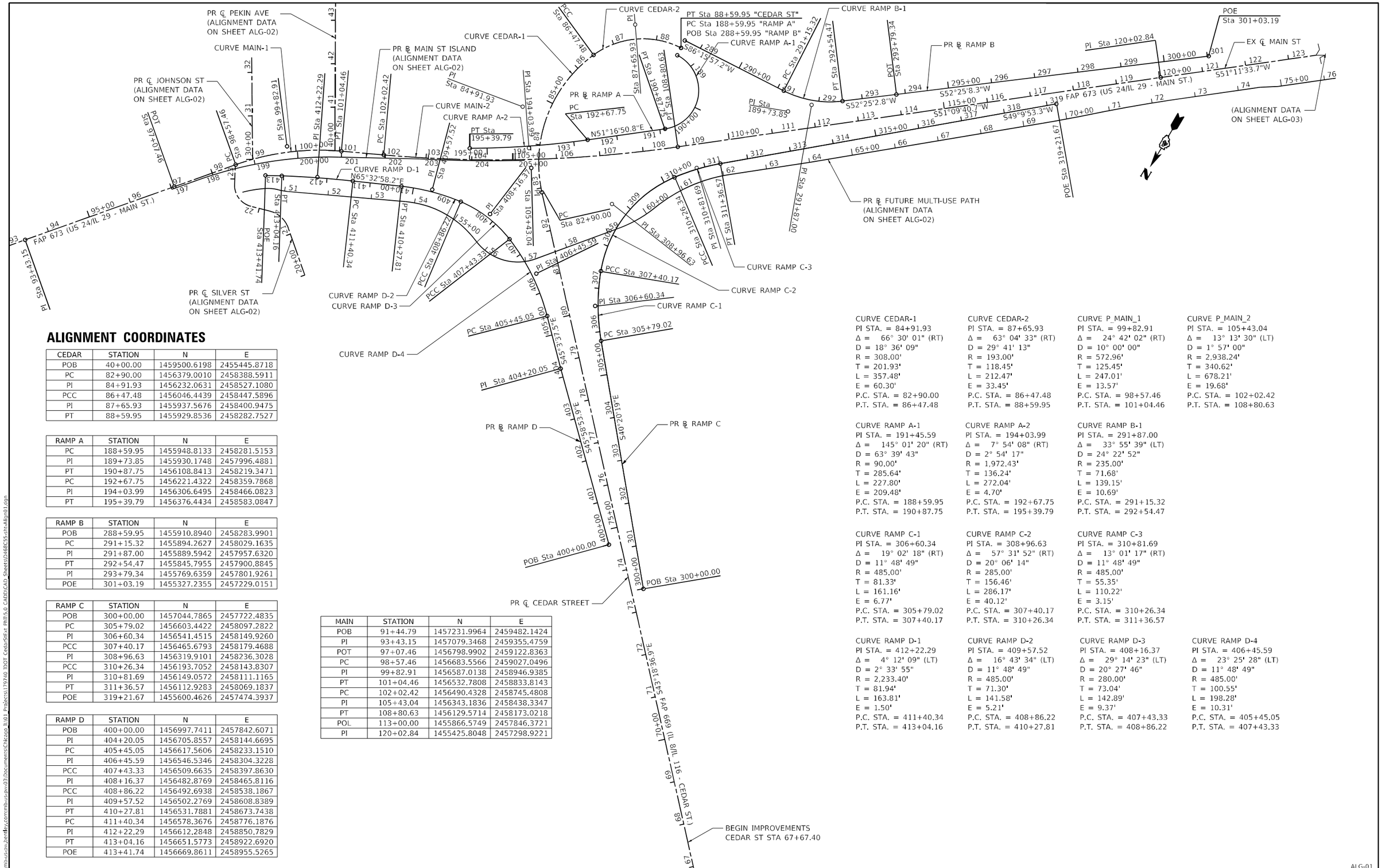


## ALIGNMENT COORDINATES

| CEDAR | STATION | N | E |
|---|---|---|---|
| POB | 40+00.00 | 1459500.6198 | 2455445.8718 |
| PC | 82+90.00 | 1456379.0010 | 2458388.5911 |
| PI | 84+91.93 | 1456232.0631 | 2458527.1080 |
| PCC | 86+47.48 | 1456046.4439 | 2458447.5896 |
| PI | 87+65.93 | 1455937.5676 | 2458400.9475 |
| PT | 88+59.95 | 1455929.8536 | 2458282.7527 |

| RAMP A | STATION | N | E |
|---|---|---|---|
| PC | 188+59.95 | 1455948.8133 | 2458281.5153 |
| PI | 189+73.85 | 1455930.1748 | 2457996.4881 |
| PT | 190+87.75 | 1456108.8413 | 2458219.3471 |
| PC | 192+67.75 | 1456221.4322 | 2458359.7868 |
| PI | 194+03.99 | 1456306.6495 | 2458466.0823 |
| PT | 195+39.79 | 1456376.4434 | 2458583.0847 |

| RAMP B | STATION | N | E |
|---|---|---|---|
| POB | 288+59.95 | 1455910.8940 | 2458283.9901 |
| PC | 291+15.32 | 1455894.2627 | 2458029.1635 |
| PI | 291+87.00 | 1455889.5942 | 2457957.6320 |
| PT | 292+54.47 | 1455845.7955 | 2457900.8845 |
| PI | 293+79.34 | 1455769.6359 | 2457801.9261 |
| POE | 301+03.19 | 1455327.2355 | 2457229.0151 |

| RAMP C | STATION | N | E |
|---|---|---|---|
| POB | 300+00.00 | 1457044.7865 | 2457722.4835 |
| PC | 305+79.02 | 1456603.4422 | 2458097.2822 |
| PI | 306+60.34 | 1456541.4515 | 2458149.9260 |
| PCC | 307+40.17 | 1456465.6793 | 2458179.4688 |
| PI | 308+96.63 | 1456319.9101 | 2458236.3028 |
| PCC | 310+26.34 | 1456193.7052 | 2458143.8307 |
| PI | 310+81.69 | 1456149.0572 | 2458111.1165 |
| PT | 311+36.57 | 1456112.9283 | 2458069.1837 |
| POE | 319+21.67 | 1455600.4626 | 2457474.3937 |

| RAMP D | STATION | N | E |
|---|---|---|---|
| POB | 400+00.00 | 1456997.7411 | 2457842.6071 |
| PI | 404+20.05 | 1456705.8557 | 2458144.6695 |
| PC | 405+45.05 | 1456617.5606 | 2458233.1510 |
| PI | 406+45.59 | 1456546.5346 | 2458304.3228 |
| PCC | 407+43.33 | 1456509.6635 | 2458397.8630 |
| PI | 408+16.37 | 1456482.8769 | 2458465.8116 |
| PCC | 408+86.22 | 1456492.6938 | 2458538.1867 |
| PI | 409+57.52 | 1456502.2769 | 2458608.8389 |
| PT | 410+27.81 | 1456531.7881 | 2458673.7438 |
| PC | 411+40.34 | 1456578.3676 | 2458776.1876 |
| PI | 412+22.29 | 1456612.2848 | 2458850.7829 |
| PT | 413+04.16 | 1456651.5773 | 2458922.6920 |
| POE | 413+41.74 | 1456669.8611 | 2458955.5265 |

| MAIN | STATION | N | E |
|---|---|---|---|
| POB | 91+44.79 | 1457231.9964 | 2459482.1424 |
| PI | 93+43.15 | 1457079.3468 | 2459355.4759 |
| POT | 97+07.46 | 1456798.9902 | 2459122.8363 |
| PC | 98+57.46 | 1456683.5566 | 2459027.0496 |
| PI | 99+82.91 | 1456587.0138 | 2458946.9385 |
| PT | 101+04.46 | 1456532.7808 | 2458833.8143 |
| PC | 102+02.42 | 1456490.4328 | 2458745.4808 |
| PI | 105+43.04 | 1456343.1836 | 2458438.3347 |
| PT | 108+80.63 | 1456129.5714 | 2458173.0218 |
| POL | 113+00.00 | 1455866.5749 | 2457846.3721 |
| PI | 120+02.84 | 1455425.8048 | 2457298.9221 |

CURVE CEDAR-1
PI STA. = 84+91.93
Δ = 66° 30' 01" (RT)
D = 18° 36' 09"
R = 308.00'
T = 201.93'
L = 357.48'
E = 60.30'
P.C. STA. = 82+90.00
P.T. STA. = 86+47.48

CURVE CEDAR-2
PI STA. = 87+65.93
Δ = 63° 04' 33" (RT)
D = 29° 41' 13"
R = 193.00'
T = 118.45'
L = 212.47'
E = 33.45'
P.C. STA. = 86+47.48
P.T. STA. = 88+59.95

CURVE P_MAIN_1
PI STA. = 99+82.91
Δ = 24° 42' 02" (RT)
D = 10° 00' 00"
R = 572.96'
T = 125.45'
L = 247.01'
E = 13.57'
P.C. STA. = 98+57.46
P.T. STA. = 101+04.46

CURVE P_MAIN_2
PI STA. = 105+43.04
Δ = 13° 13' 30" (LT)
D = 1° 57' 00"
R = 2,938.24'
T = 340.62'
L = 678.21'
E = 19.68'
P.C. STA. = 102+02.42
P.T. STA. = 108+80.63

CURVE RAMP A-1
PI STA. = 191+45.59
Δ = 145° 01' 20" (RT)
D = 63° 39' 43"
R = 90.00'
T = 285.64'
L = 227.80'
E = 209.48'
P.C. STA. = 188+59.95
P.T. STA. = 190+87.75

CURVE RAMP A-2
PI STA. = 194+03.99
Δ = 7° 54' 08" (RT)
D = 2° 54' 17"
R = 1,972.43'
T = 136.24'
L = 272.04'
E = 4.70'
P.C. STA. = 192+67.75
P.T. STA. = 195+39.79

CURVE RAMP B-1
PI STA. = 291+87.00
Δ = 33° 55' 39" (LT)
D = 24° 22' 52"
R = 235.00'
T = 71.68'
L = 139.15'
E = 10.69'
P.C. STA. = 291+15.32
P.T. STA. = 292+54.47

CURVE RAMP C-1
PI STA. = 306+60.34
Δ = 19° 02' 18" (RT)
D = 11° 48' 49"
R = 485.00'
T = 81.33'
L = 161.16'
E = 6.77'
P.C. STA. = 305+79.02
P.T. STA. = 307+40.17

CURVE RAMP C-2
PI STA. = 308+96.63
Δ = 57° 31' 52" (RT)
D = 20° 06' 14"
R = 285.00'
T = 156.46'
L = 286.17'
E = 40.12'
P.C. STA. = 307+40.17
P.T. STA. = 310+26.34

CURVE RAMP C-3
PI STA. = 310+81.69
Δ = 13° 01' 17" (RT)
D = 11° 48' 49"
R = 485.00'
T = 55.35'
L = 110.22'
E = 3.15'
P.C. STA. = 310+26.34
P.T. STA. = 311+36.57

CURVE RAMP D-1
PI STA. = 412+22.29
Δ = 4° 12' 09" (LT)
D = 2° 33' 55"
R = 2,233.40'
T = 81.94'
L = 163.81'
E = 1.50'
P.C. STA. = 411+40.34
P.T. STA. = 413+04.16

CURVE RAMP D-2
PI STA. = 409+57.52
Δ = 16° 43' 34" (LT)
D = 11° 48' 49"
R = 485.00'
T = 71.30'
L = 141.58'
E = 5.21'
P.C. STA. = 408+86.22
P.T. STA. = 410+27.81

CURVE RAMP D-3
PI STA. = 408+16.37
Δ = 29° 14' 23" (LT)
D = 20° 27' 46"
R = 280.00'
T = 73.04'
L = 142.89'
E = 9.37'
P.C. STA. = 407+43.33
P.T. STA. = 408+86.22

CURVE RAMP D-4
PI STA. = 406+45.59
Δ = 23° 25' 28" (LT)
D = 11° 48' 49"
R = 485.00'
T = 100.55'
L = 198.28'
E = 10.31'
P.C. STA. = 405+45.05
P.T. STA. = 407+43.33

ALG-01

Michael Baker INTERNATIONAL
200 W Adams Street
Suite 1800
Chicago, IL 60606
P:+312.707.8870
FAX: 312.707.8804

| | | | |
|---|---|---|---|
| USER NAME = DLamb | DESIGNED - SAS | REVISED - | |
| | DRAWN - DCL | REVISED - | |
| PLOT SCALE = 200.0000 ' / in. | CHECKED - PML | REVISED - | |
| PLOT DATE = 6/6/2023 | DATE - 6/08/2023 | REVISED - | |

**STATE OF ILLINOIS**
**DEPARTMENT OF TRANSPORTATION**

**CEDAR ST. (IL-8/IL-116) OVER TZPR & IL-29**
**ALIGNMENT, TIES, AND BENCHMARKS**

SCALE: 1"=100' | SHEET 1 OF 5 SHEETS | STA. TO STA.

| F.A.P. RTE. | SECTION | COUNTY | TOTAL SHEETS | SHEET NO. |
|---|---|---|---|---|
| VAR. | 13 (HVB, HB-3) BR-1:R | TAZEWELL | 1173 | 66 |

CONTRACT NO. 68C55

ILLINOIS | FED. AID PROJECT

MODEL: Default
FILE NAME: pw:\\ms-us-cv.bentley.com:mb-us-pw-03\Documents\Chicago IL\01 Projects\176740 IDOT Cedar\Sfxt Plt\5.0 CADD\CAD Sheets\0468C55-sht-Align01.dgn

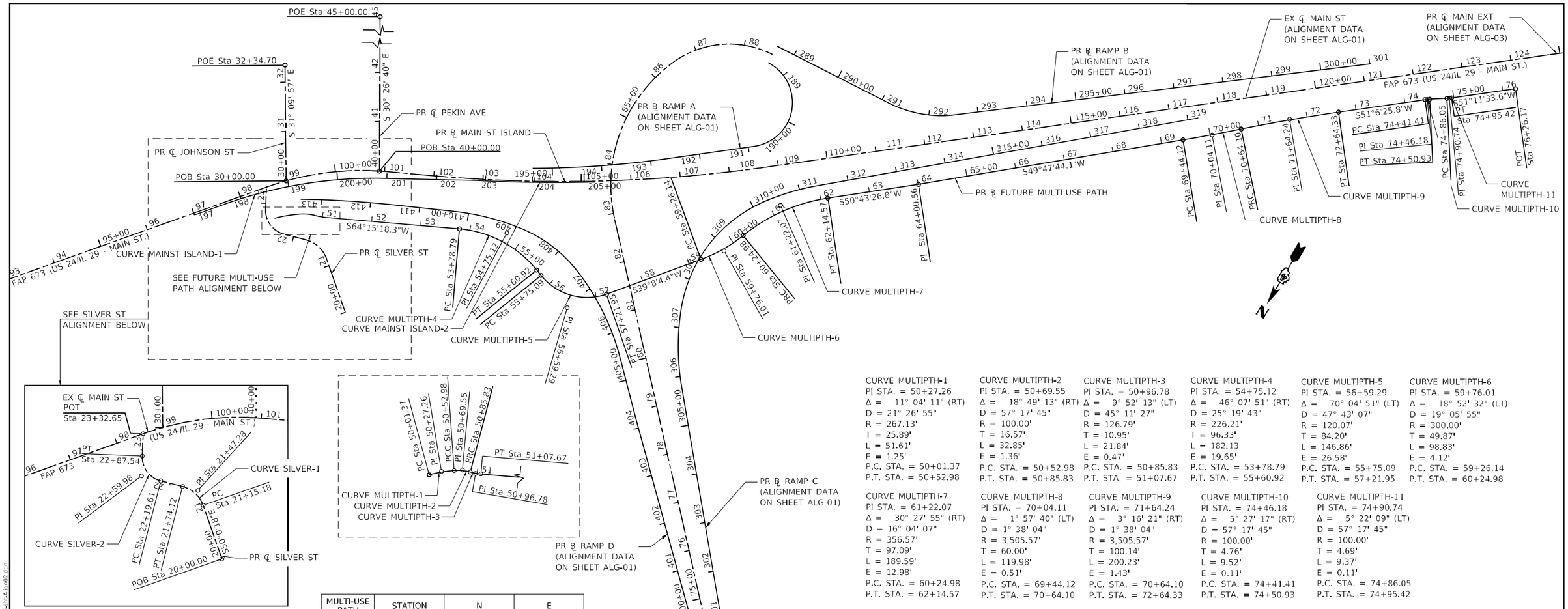


CURVE MULTIPTH-1
PI STA. = 50+27.26
Δ = 11° 04' 11" (RT)
D = 21° 26' 55"
R = 267.13'
T = 25.89'
L = 51.61'
E = 1.25'
P.C. STA. = 50+01.37
P.T. STA. = 50+52.98

CURVE MULTIPTH-2
PI STA. = 50+69.55
Δ = 18° 49' 13" (RT)
D = 57° 17' 45"
R = 100.00'
T = 16.57'
L = 32.85'
E = 1.36'
P.C. STA. = 50+52.98
P.T. STA. = 50+85.83

CURVE MULTIPTH-3
PI STA. = 50+96.78
Δ = 9° 52' 13" (LT)
D = 45° 11' 27"
R = 126.79'
T = 10.95'
L = 21.84'
E = 0.47'
P.C. STA. = 50+85.83
P.T. STA. = 51+07.67

CURVE MULTIPTH-4
PI STA. = 54+75.12
Δ = 46° 07' 51" (RT)
D = 25° 19' 43"
R = 226.21'
T = 96.33'
L = 182.13'
E = 19.65'
P.C. STA. = 53+78.79
P.T. STA. = 55+60.92

CURVE MULTIPTH-5
PI STA. = 56+59.29
Δ = 70° 04' 51" (LT)
D = 47° 43' 07"
R = 120.07'
T = 84.20'
L = 146.86'
E = 26.58'
P.C. STA. = 55+75.09
P.T. STA. = 57+21.95

CURVE MULTIPTH-6
PI STA. = 59+76.01
Δ = 18° 52' 32" (LT)
D = 19° 05' 55"
R = 300.00'
T = 49.87'
L = 98.83'
E = 4.12'
P.C. STA. = 59+26.14
P.T. STA. = 60+24.98

CURVE MULTIPTH-7
PI STA. = 61+22.07
Δ = 30° 27' 55" (RT)
D = 16° 04' 07"
R = 356.57'
T = 97.09'
L = 189.59'
E = 12.98'
P.C. STA. = 60+24.98
P.T. STA. = 62+14.57

CURVE MULTIPTH-8
PI STA. = 70+04.11
Δ = 1° 57' 40" (LT)
D = 1° 38' 04"
R = 3,505.57'
T = 60.00'
L = 119.98'
E = 0.51'
P.C. STA. = 69+44.12
P.T. STA. = 70+64.10

CURVE MULTIPTH-9
PI STA. = 71+64.24
Δ = 3° 16' 21" (RT)
D = 1° 38' 04"
R = 3,505.57'
T = 100.14'
L = 200.23'
E = 1.43'
P.C. STA. = 70+64.10
P.T. STA. = 72+64.33

CURVE MULTIPTH-10
PI STA. = 74+46.18
Δ = 5° 27' 17" (RT)
D = 57° 17' 45"
R = 100.00'
T = 4.76'
L = 9.52'
E = 0.11'
P.C. STA. = 74+41.41
P.T. STA. = 74+50.93

CURVE MULTIPTH-11
PI STA. = 74+90.74
Δ = 5° 22' 09" (LT)
D = 57° 17' 45"
R = 100.00'
T = 4.69'
L = 9.37'
E = 0.11'
P.C. STA. = 74+86.05
P.T. STA. = 74+95.42

CURVE SILVER-1
PI STA. = 21+47.28
Δ = 56° 17' 06" (LT)
D = 95° 29' 35"
R = 60.00'
T = 32.09'
L = 58.94'
E = 8.04'
P.C. STA. = 21+15.18
P.T. STA. = 21+74.12

CURVE SILVER-2
PI STA. = 22+59.98
Δ = 77° 50' 29" (RT)
D = 114° 35' 30"
R = 50.00'
T = 40.37'
L = 67.93'
E = 14.27'
P.C. STA. = 22+19.61
P.T. STA. = 22+87.54

CURVE MAINST ISLAND-1
PI STA. = 199+30.49
Δ = 21° 03' 03" (RT)
D = 6° 21' 58"
R = 900.00'
T = 167.22'
L = 330.67'
E = 15.40'
P.C. STA. = 197+63.27
P.T. STA. = 200+93.94

CURVE MAINST ISLAND-2
PI STA. = 204+01.29
Δ = 4° 11' 02" (LT)
D = 1° 44' 14"
R = 3,298.00'
T = 120.47'
L = 240.84'
E = 2.20'
P.C. STA. = 202+80.82
P.T. STA. = 205+21.66

## ALIGNMENT COORDINATES

| SILVER | STATION | N | E |
|---|---|---|---|
| POB | 20+00.00 | 1456820.9462 | 2458760.8152 |
| PC | 21+15.18 | 1456746.9159 | 2458849.0567 |
| PI | 21+47.28 | 1457283.8773 | 2458833.7133 |
| PT | 21+74.12 | 1456735.2906 | 2458904.4498 |
| PC | 22+19.61 | 1456748.0482 | 2458948.1057 |
| PI | 22+59.98 | 1457316.9622 | 2458946.9288 |
| PT | 22+87.54 | 1456723.8738 | 2459006.0928 |
| POE | 23+32.65 | 1456684.2031 | 2459027.5861 |

| JOHNSON ST | STATION | N | E |
|---|---|---|---|
| POB | 30+00.00 | 1456653.0535 | 2458999.8437 |
| POE | 32+34.70 | 1456452.2276 | 2459121.3047 |

| PEKIN AVE | STATION | N | E |
|---|---|---|---|
| POB | 40+00.00 | 1456539.3792 | 2458847.1316 |
| POE | 45+00.00 | 1456108.3187 | 2459100.4830 |

| MAINST ISLAND | STATION | N | E |
|---|---|---|---|
| POB | 197+00.00 | 1456807.3564 | 2459124.4332 |
| PC | 197+63.27 | 1456758.5784 | 2459084.1365 |
| PI | 199+30.49 | 1456629.6619 | 2458977.6355 |
| PT | 200+93.94 | 1456547.6038 | 2458831.9358 |
| PC | 202+80.82 | 1456455.8937 | 2458669.0985 |
| PI | 204+01.29 | 1456399.7915 | 2458562.4875 |
| PT | 205+21.66 | 1456336.0606 | 2458460.2539 |

| MULTI-USE PATH | STATION | N | E |
|---|---|---|---|
| PC | 50+01.37 | 1456730.2251 | 2458981.3789 |
| PI | 50+27.26 | 1456711.6781 | 2458963.3206 |
| PCC | 50+52.98 | 1456696.9436 | 2458942.0371 |
| PI | 50+69.55 | 1456687.5101 | 2458928.4108 |
| PRC | 50+85.83 | 1456682.9769 | 2458912.4698 |
| PI | 50+96.78 | 1456679.9823 | 2458901.9394 |
| PT | 51+07.67 | 1456675.2269 | 2458892.0783 |
| PC | 53+78.79 | 1456545.8717 | 2458653.7652 |
| PI | 54+75.12 | 1456515.7273 | 2458561.0550 |
| PT | 55+60.92 | 1456549.3918 | 2458470.8042 |
| PC | 55+75.09 | 2456554.3426 | 2458457.5315 |
| PI | 56+59.29 | 1456583.7559 | 2458378.6359 |
| PT | 57+21.95 | 1456519.6012 | 2458324.1030 |
| PC | 59+26.14 | 1456361.2146 | 2458195.2271 |
| PI | 59+76.01 | 2456312.4371 | 2458177.7063 |
| PRC | 60+24.98 | 1456275.7504 | 2458146.4856 |
| PI | 61+22.07 | 1456184.6620 | 2458112.8652 |
| PT | 62+14.57 | 1456113.1321 | 2458045.9331 |
| PI | 64+00.56 | 1456005.4520 | 2457893.7254 |
| PC | 69+44.12 | 1455654.5782 | 2457478.5874 |
| PI | 70+04.11 | 1455615.8496 | 2457432.7654 |
| PRC | 70+64.10 | 1455575.5757 | 2457388.2956 |
| PI | 71+64.24 | 1455508.3529 | 2457314.0692 |
| PT | 72+64.33 | 1455445.4771 | 2457236.1264 |
| PC | 74+41.41 | 1455334.2917 | 2457098.2975 |
| PI | 74+46.18 | 1455331.3007 | 2457094.5898 |
| PT | 74+50.93 | 1455328.6758 | 2457090.6146 |
| PC | 74+86.05 | 1455309.3256 | 2457061.3110 |
| PI | 74+90.74 | 1455306.7418 | 2457057.3982 |
| PT | 74+95.42 | 1455303.8033 | 2457053.7444 |
| POE | 76+26.17 | 1455221.8607 | 2456951.8550 |

Michael Baker INTERNATIONAL
200 W Adams Street
Suite 1800
Chicago, IL 60606
PH: 312.707.8772
FAX: 312.707.8804

| | | | |
|---|---|---|---|
| USER NAME = DLamb | DESIGNED - SAS | REVISED - | |
| | DRAWN - DCL | REVISED - | |
| PLOT SCALE = 200.0000 ' / in. | CHECKED - PML | REVISED - | |
| PLOT DATE = 8/6/2023 | DATE - 6/08/2023 | REVISED - | |

**STATE OF ILLINOIS**
**DEPARTMENT OF TRANSPORTATION**

**CEDAR ST. (IL-8/IL-116) OVER TZPR & IL-29**
**ALIGNMENT, TIES, AND BENCHMARKS**

SCALE: 1"=100' | SHEET 2 OF 5 SHEETS | STA. TO STA.

ALG-02

| F.A.P. RTE. | SECTION | COUNTY | TOTAL SHEETS | SHEET NO. |
|---|---|---|---|---|
| VAR. | 13 (HVB, HB-3) BR-1;R | TAZEWELL | 1173 | 67 |
| | | CONTRACT NO. 68C55 | | |
| | ILLINOIS | FED. AID PROJECT | | |

MODEL: Default
FILE NAME: pw:\\ms-ussvw.bentley.com:ms-ussvw_chicago_1\01 Projects\179740 IDOT CedarSt\Ex PhII\5.0 CADD\CAD_Sheets\0468C55-sht-Align02.dgn

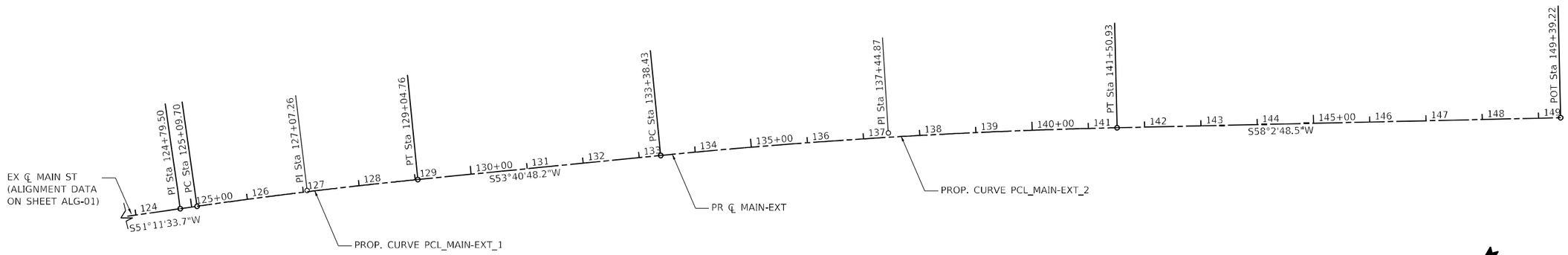


## ALIGNMENT COORDINATES

| MAIN | STATION | N | E |
|---|---|---|---|
| PI | 124+79.50 | 1455127.0759 | 2456927.4754 |
| PC | 125+09.70 | 1455108.1501 | 2456903.9426 |
| PI | 127+07.26 | 1454984.3391 | 2456749.9930 |
| PT | 129+04.76 | 1454867.3260 | 2456590.8152 |
| PC | 133+38.43 | 1454610.4642 | 2456241.3954 |
| PI | 137+44.87 | 1454369.7283 | 2455913.9123 |
| PT | 141+50.93 | 1454154.6260 | 2455569.0500 |
| POT | 149+39.22 | 1453737.4413 | 2454900.1998 |

PROP. CURVE PCL_MAIN-EXT_1
PI STA. = 127+07.26
Δ = 2° 29' 15" (RT)
D = 0° 37' 47"
R = 9,100.00'
T = 197.56'
L = 395.06'
E = 2.14'
P.C. STA. = 125+09.70
P.T. STA. = 129+04.76

PROP. CURVE PCL_MAIN-EXT_2
PI STA. = 137+44.87
Δ = 4° 22' 00" (RT)
D = 0° 32' 15"
R = 10,660.74'
T = 406.45'
L = 812.50'
E = 7.75'
P.C. STA. = 133+38.43
P.T. STA. = 141+50.93

ALG-03

MODEL: Default
FILE NAME: pw:\\mbi-usow.bentley.com:mbi-usow-03\Documents\Chicago IL\01 Projects\179740 IDOT Cedar\Sfx1 PhII\5.0 CADD\CAD Sheets\0468C55-sht-Align02a.dgn

Michael Baker INTERNATIONAL
200 W Adams Street
Suite 1800
Chicago, IL 60606
P:+1 312.707.8770
FAX: 312.707.8804

| | | | |
|---|---|---|---|
| USER NAME = DLamb | DESIGNED - SAS | REVISED - | |
| | DRAWN - DCL | REVISED - | |
| PLOT SCALE = 200.0000 ' / in. | CHECKED - PML | REVISED - | |
| PLOT DATE = 6/6/2023 | DATE - 6/08/2023 | REVISED - | |

**STATE OF ILLINOIS**
**DEPARTMENT OF TRANSPORTATION**

**CEDAR ST. (IL-8/IL-116) OVER TZPR & IL-29**
**ALIGNMENT, TIES, AND BENCHMARKS**

SCALE: 1"=100' | SHEET 3 OF 5 SHEETS | STA. TO STA.

| F.A.P. RTE. | SECTION | COUNTY | TOTAL SHEETS | SHEET NO. |
|---|---|---|---|---|
| VAR. | 13 (HVB, HB-3) BR-1;R | TAZEWELL | 1173 | 68 |
| | | CONTRACT NO. 68C55 | | |
| | ILLINOIS | FED. AID PROJECT | | |

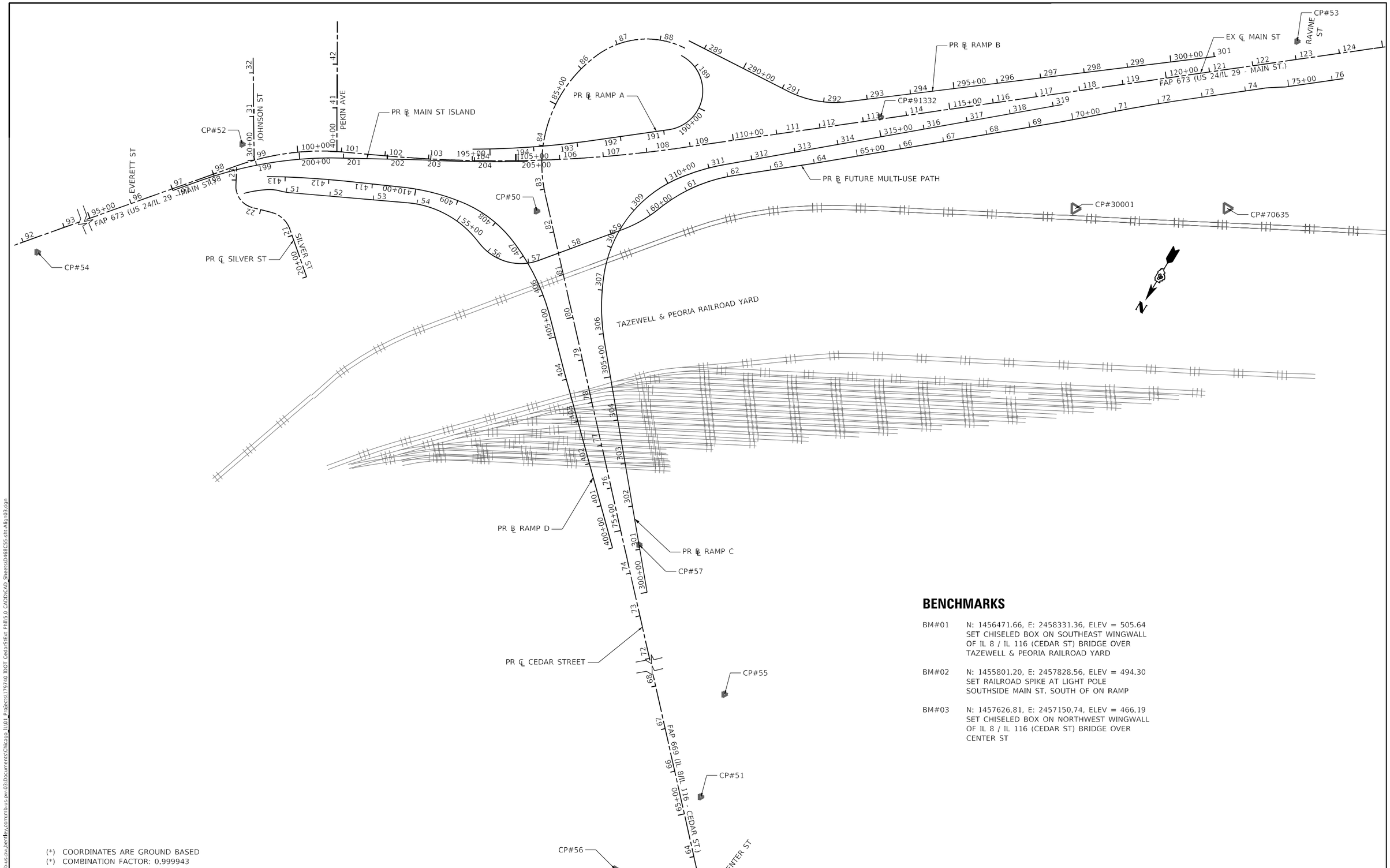


## BENCHMARKS

BM#01 N: 1456471.66, E: 2458331.36, ELEV = 505.64
SET CHISELED BOX ON SOUTHEAST WINGWALL OF IL 8 / IL 116 (CEDAR ST) BRIDGE OVER TAZEWELL & PEORIA RAILROAD YARD

BM#02 N: 1455801.20, E: 2457828.56, ELEV = 494.30
SET RAILROAD SPIKE AT LIGHT POLE SOUTHSIDE MAIN ST. SOUTH OF ON RAMP

BM#03 N: 1457626.81, E: 2457150.74, ELEV = 466.19
SET CHISELED BOX ON NORTHWEST WINGWALL OF IL 8 / IL 116 (CEDAR ST) BRIDGE OVER CENTER ST

(*) COORDINATES ARE GROUND BASED
(*) COMBINATION FACTOR: 0.999943

ALG-04

MODEL: Default
FILE NAME: pw:\\mb-us-pw.bentley.com:mb-us-pw-03:Documents\Chicago_IL\01_Projects\179740 IDOT Cedar\Site 1 Phf15.0 CADD\CADD Sheets\0468C55-sht-Align03.dgn

Michael Baker INTERNATIONAL
200 W Adams Street
Suite 1800
Chicago, IL 60606
PH: 312.707.8872
FAX: 312.707.8804

| | | | |
|---|---|---|---|
| USER NAME = DLamb | DESIGNED - SAS | REVISED - | |
| | DRAWN - DCL | REVISED - | |
| PLOT SCALE = 200.0000 ' / in. | CHECKED - PML | REVISED - | |
| PLOT DATE = 6/6/2023 | DATE - 6/08/2023 | REVISED - | |

**STATE OF ILLINOIS**
**DEPARTMENT OF TRANSPORTATION**

**CEDAR ST. (IL-8/IL-116) OVER TZPR & IL-29**
**ALIGNMENT, TIES, AND BENCHMARKS**

SCALE: 1"=100' | SHEET 4 OF 5 SHEETS | STA. TO STA.

| F.A.P. RTE. | SECTION | COUNTY | TOTAL SHEETS | SHEET NO. |
|---|---|---|---|---|
| VAR. | 13 (HVB, HB-3) BR-1;R | TAZEWELL | 1173 | 69 |
| | | CONTRACT NO. 68C55 | | |
| | ILLINOIS | FED. AID PROJECT | | |

## CONTROL POINTS

**CP#50**
N: 1456423.2980, E: 2458384.0150
CEDAR STA 82+54.63, 27.06'LT
ELEV = 503.916
SET IRON ROD

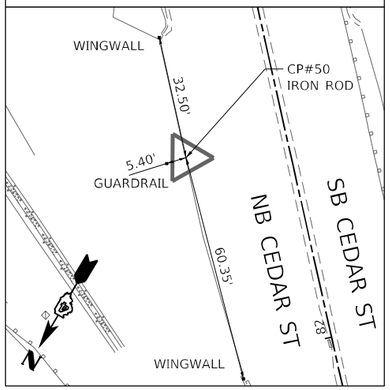


**CP#51**
N: 1457628.803, E: 2457147.862
CEDAR STA 65+29.51, 45.52'RT
ELEV = 465.12
SET IRON ROD

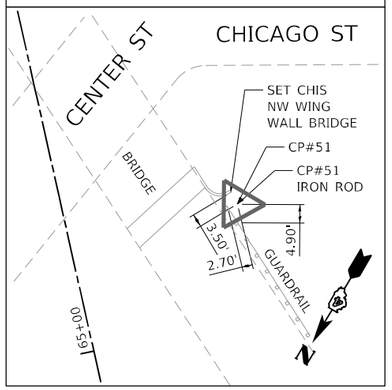


**CP#52**
N: 1456635.5650, E: 2459041.3930
MAIN STA 98+83.33, 42.31'LT
ELEV = 470.29
SET IRON ROD

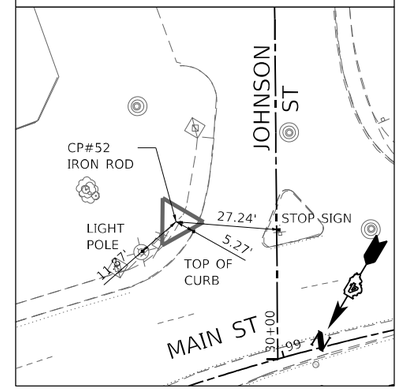


**CP#53**
N: 1455202.7330, E: 2457086.1460
MAIN STA 123+08.44, 40.48'LT
ELEV = 493.69
SET IRON ROD

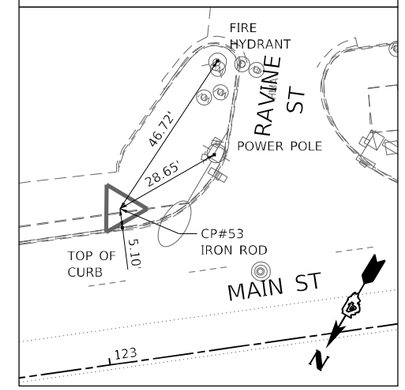


**CP#54**
N: 1457192.560, E: 2459406.549
MAIN STA 92+23.41, 32.99'RT
ELEV = 461.43
CHSL X

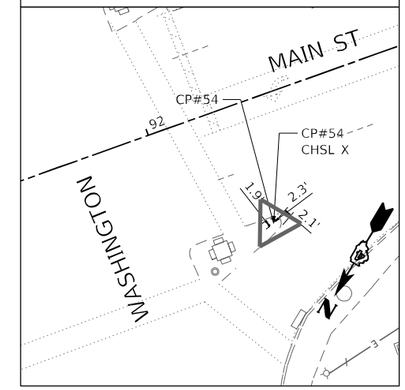


**CP#55**
N: 1457399.515, E: 2457220.847
CEDAR STA 67+46.41, 149.69'RT
ELEV = 447.26
SET IRON ROD

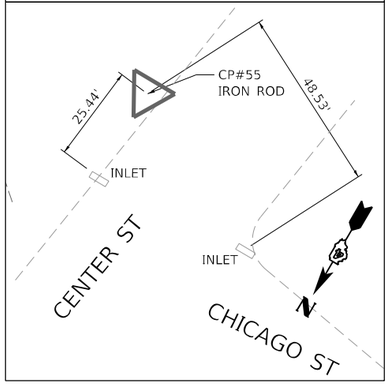


**CP#56**
N: 1457545.718, E: 2457007.805
CEDAR STA 64+11.27, 181.69'LT
ELEV = 465.18
SET IRON ROD

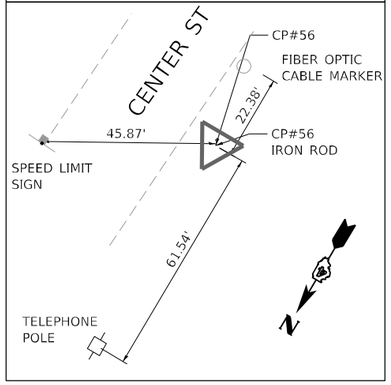


**CP#57**
N: 1456960.5510, E: 2457793.4490
CEDAR STA 74+58.60, 34.14'RT
ELEV = 487.60
SET IRON ROD

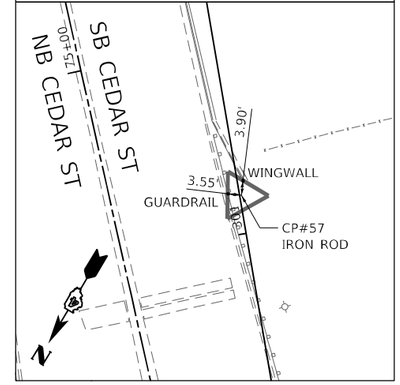


**CP#91332**
N: 1455837.591, E: 2457817.320
MAIN STA 113+40.81, 4.36'LT
ELEV = 492.78
PK/FLASHER

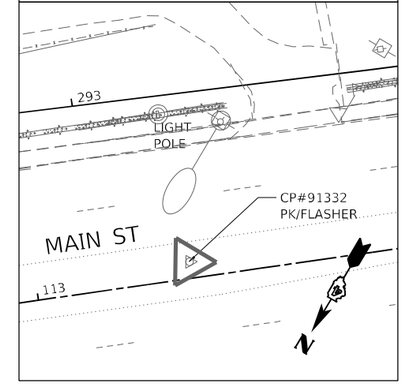


(*) COORDINATES ARE GROUND BASED
(*) COMBINATION FACTOR: 0.999943

ALG-05

| | | | |
|---|---|---|---|
| Michael Baker INTERNATIONAL 200 W Adams Street Suite 1800 Chicago, IL 60606 PH: 312.707.8775 FAX: 312.707.8804 | USER NAME = DLamb | DESIGNED - SAS | REVISED - |
| | | DRAWN - DCL | REVISED - |
| | PLOT SCALE = 40.0000 ' / in. | CHECKED - PML | REVISED - |
| | PLOT DATE = 6/6/2023 | DATE - 6/08/2023 | REVISED - |

**STATE OF ILLINOIS**
**DEPARTMENT OF TRANSPORTATION**

**CEDAR ST. (IL-84/IL-116) OVER TZPR & IL-29**
**ALIGNMENT, TIES, AND BENCHMARKS**

SCALE: 1"=20' | SHEET 5 OF 5 SHEETS | STA. TO STA.

| F.A.P. RTE. | SECTION | COUNTY | TOTAL SHEETS | SHEET NO. |
|---|---|---|---|---|
| VAR. | 13 (HVB, HB-3) BR-1;R | TAZEWELL | 1173 | 70 |
| | | CONTRACT NO. 68C55 | | |
| | | ILLINOIS FED. AID PROJECT | | |

MODEL: Default
FILE NAME: pw:\\ms-ussvw.bentley.com:ms-ussvw_bentley_com\bb-us-pw-03\Documents\Chicago_IL\01 Projects\179740 IDOT CedarSIEx PRI\5.0 CADD\CAD_Sheets\D468C55-sht-Align04.dgn

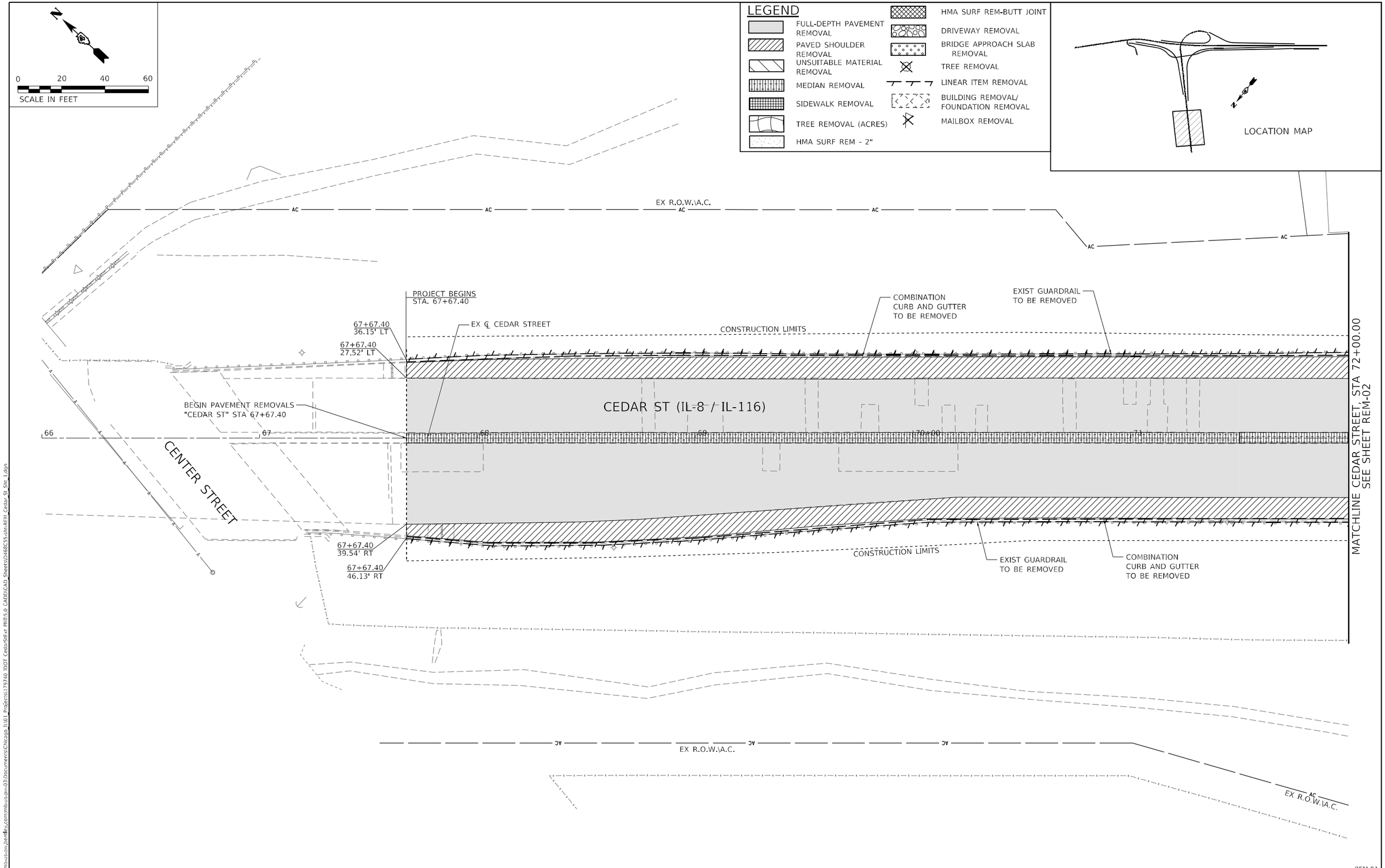


REM-01

MODEL: Default
FILE NAME: pw:\\mbi-us-civ.bentley.com:mbi-us-pw-03\Documents\Chicago IL\01 Projects\179740 IDOT Cedar\SiExt Phl\5.0 CADD\CAD Sheets\D468C55-sht-REM Cedar St Sht 1.dgn

Michael Baker INTERNATIONAL
200 W Adams Street
Suite 1800
Chicago, IL 60606
P:+1 312.707.8770
FAX: 312.707.8804

| | | | |
|---|---|---|---|
| USER NAME = Winson.Teng | DESIGNED - TOM | REVISED - | |
| | DRAWN - MER | REVISED - | |
| PLOT SCALE = 40.0000 ' / in. | CHECKED - MJK | REVISED - | |
| PLOT DATE = 5/1/2025 | DATE - 4/08/2025 | REVISED - | |

**STATE OF ILLINOIS**
**DEPARTMENT OF TRANSPORTATION**

**CEDAR ST. (IL-8/IL-116) OVER TZPR & IL-29**
**REMOVAL PLAN – CEDAR ST. (IL-8/IL-116)**

SCALE: 1"=20' | SHEET 1 OF 11 SHEETS | STA. 67+67.40 TO STA. 72+00.00

| F.A.P. RTE. | SECTION | COUNTY | TOTAL SHEETS | SHEET NO. |
|---|---|---|---|---|
| VAR. | 13 (HVB, HB-3) BR-1:R | TAZEWELL | 1173 | 71 |

CONTRACT NO. 68C55

ILLINOIS | FED. AID PROJECT

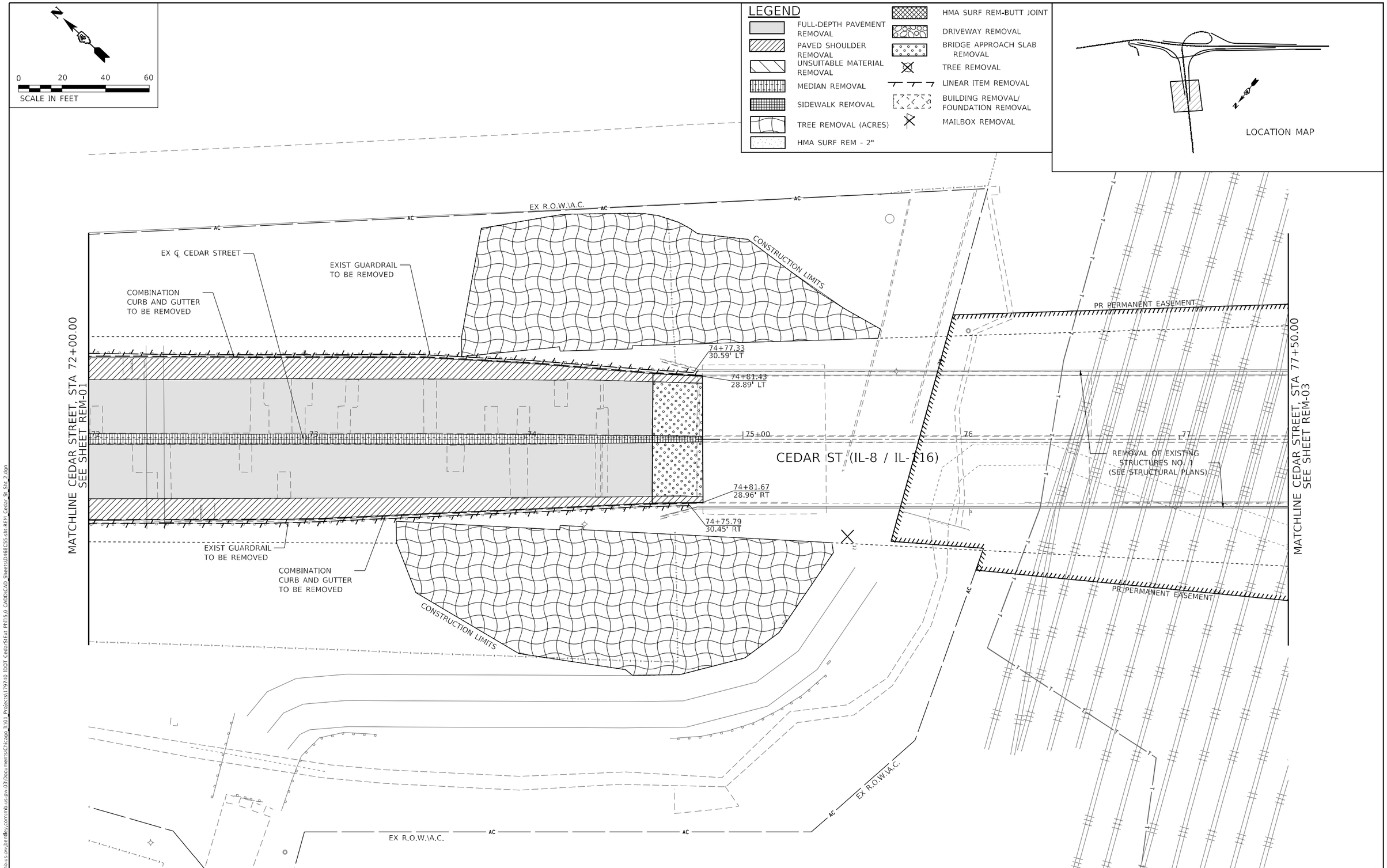


REM-02

| | | | | | | | | | |
|---|---|---|---|---|---|---|---|---|---|
| Michael Baker INTERNATIONAL 200 W Adams Street Suite 1800 Chicago, IL 60606 PH: 312.707.8770 FAX: 312.707.8804 | USER NAME = DLamb | DESIGNED - TOM | REVISED - | STATE OF ILLINOIS DEPARTMENT OF TRANSPORTATION | CEDARS ST. (IL-8/IL-116) OVER TZPR & IL-29 REMOVAL PLAN – CEDAR ST. (IL-8/IL-116) | F.A.P. RTE. | SECTION | COUNTY | TOTAL SHEETS / SHEET NO. |
| | | DRAWN - MER | REVISED - | | | VAR. | 13 (HVB, HB-3) BR-1;R | TAZEWELL | 1173 / 72 |
| | PLOT SCALE = 40.0000 ' / in. | CHECKED - MJK | REVISED - | | | | | CONTRACT NO. 68C55 | |
| | PLOT DATE = 6/6/2023 | DATE - 6/08/2023 | REVISED - | | SCALE: 1"=20' / SHEET 2 OF 11 SHEETS / STA. 72+00.00 TO STA. 77+50.00 | | ILLINOIS | FED. AID PROJECT | |

MODEL: Default
FILE NAME: pw:\\mb-us-pw.bentley.com:mb-us-pw-03\Documents\Chicago-IL\01_Projects\179740 IDOT Cedar\SHEAT Phll\5.0 CADD\CAD Sheets\0468C55-sht-REM Cedar St Sht 2.dgn

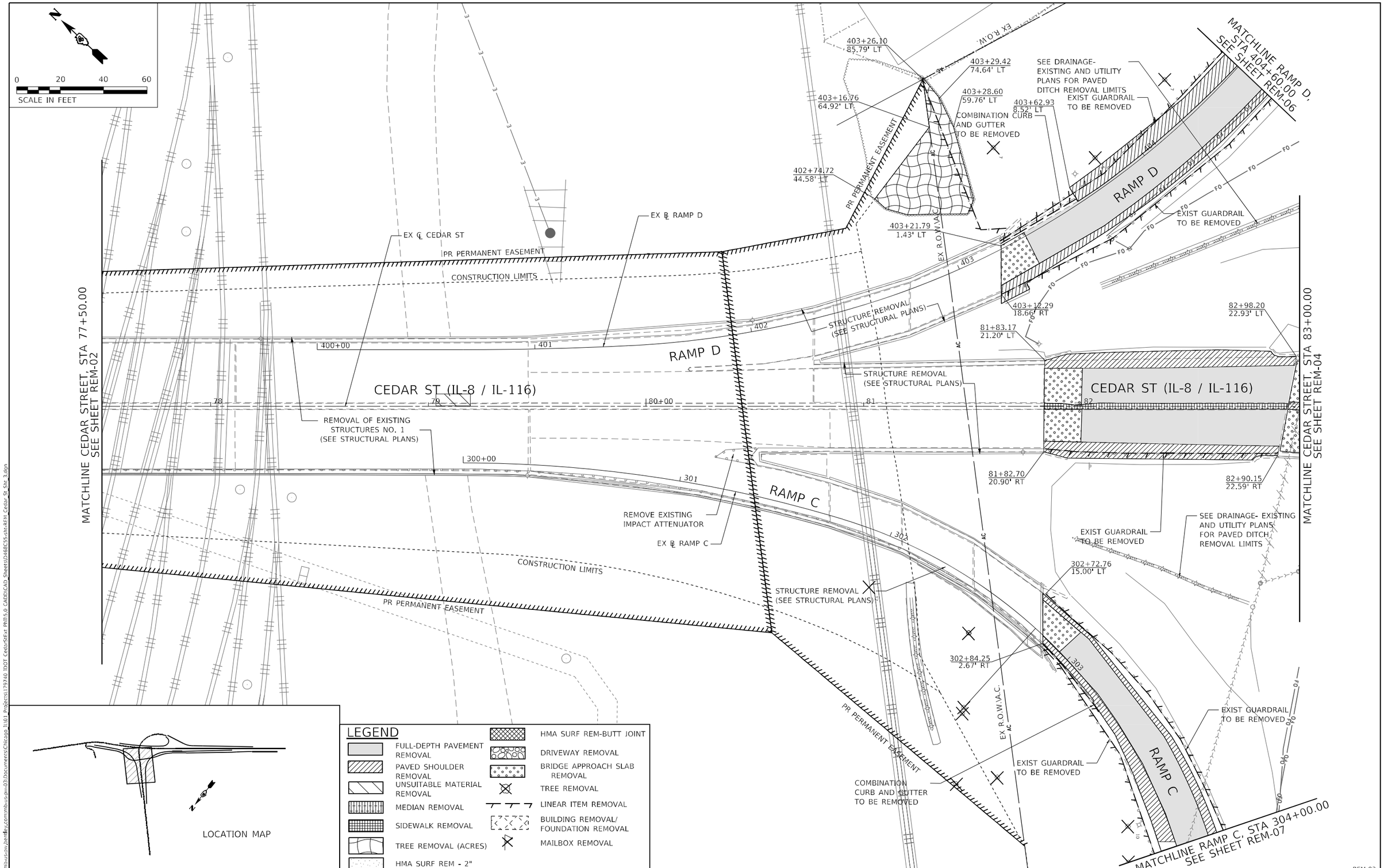


REM-03

| | | | |
|---|---|---|---|
| Michael Baker INTERNATIONAL, 200 W Adams Street Suite 1800 Chicago, IL 60606 P:+1 312.707.8770 FAX: 312.707.8804 | USER NAME = Winsen.Teng | DESIGNED - TOM | REVISED - |
| | | DRAWN - MER | REVISED - |
| | PLOT SCALE = 40.0000 ' / in. | CHECKED - MJK | REVISED - |
| | PLOT DATE = 5/1/2025 | DATE - 4/08/2025 | REVISED - |

**STATE OF ILLINOIS**
**DEPARTMENT OF TRANSPORTATION**

**CEDAR ST. (IL-8/IL-116) OVER TZPR & IL-29**
**REMOVAL PLAN – CEDAR ST. (IL-8/IL-116)**

SCALE: 1"=20' | SHEET 3 OF 11 SHEETS | STA. 77+50.00 TO STA. 80+50.00

| F.A.P. RTE. | SECTION | COUNTY | TOTAL SHEETS | SHEET NO. |
|---|---|---|---|---|
| VAR. | 13 (HVB, HB-3) BR-1:R | TAZEWELL | 1173 | 73 |

CONTRACT NO. 68C55

ILLINOIS | FED. AID PROJECT

MODEL: Default
FILE NAME: pw:\\mbs-us-pw.bentley.com:mbs-pw-03\Documents\Chicago IL\01 Projects\179740 IDOT Ceda\SiExt Plh\5.0 CADD\CAD Sheets\D468C55-sht-REM Cedar St Sht 3.dgn

SEE DRAINAGE-
EXISTING AND UTILITY
PLANS FOR PAVED
DITCH REMOVAL LIMITS

84+51.60
83.39' LT

84+07.17
21.16' LT

84+45.50
21.24' LT

84+93.87
65.80' LT

85+10.56
61.15' LT

EXIST GUARDRAIL
TO BE REMOVED

85+68.07
51.82' LT

85+27.53
28.12' LT

HILLTOP CT

SEE SHEET
REM-00 FOR
MAIN STREET
REMOVALS

83+33.33
20.98' LT

195+00

185+00

CEDAR ST (IL-8 / IL-116)

SEE DRAINAGE-
EXISTING AND UTILITY
PLANS FOR PAVED
DITCH REMOVAL LIMITS

84+16.21
20.57' RT

84+60.70
20.87' RT

84+63.18
22.01' RT

COMBINATION
CURB AND GUTTER
TO BE REMOVED

EXIST GUARDRAIL
TO BE REMOVED

STRUCTURE REMOVAL
(SEE STRUCTURAL PLANS)

MATCHLINE CEDAR STREET, STA 83+00.00
SEE SHEET REM-03

83+31.46
21.01' RT

COMBINATION
CURB AND GUTTER
TO BE REMOVED

EX ℄ MAIN ST

MATCHLINE MAIN STREET, STA 107+50.00
SEE SHEET REM-07

CONSTRUCTION LIMITS

88+13.13
29.01' RT

BEGIN RAMP B
STA. 288+59.95

BEGIN RAMP A
STA. 188+59.95

88+59.95
53.74' LT

EX ℄ RAMP A

EX ℄ RAMP B

RAMP A

RAMP B

88+59.95
56.35' LT

MATCHLINE RAMP A,
STA 189+00.00
SEE SHEET REM-07

MATCHLINE RAMP B,
STA 289+10.00
SEE SHEET REM-07

LOCATION MAP

0 20 40 60
SCALE IN FEET

## LEGEND

- FULL-DEPTH PAVEMENT REMOVAL
- PAVED SHOULDER REMOVAL
- UNSUITABLE MATERIAL REMOVAL
- MEDIAN REMOVAL
- SIDEWALK REMOVAL
- TREE REMOVAL (ACRES)
- HMA SURF REM - 2"
- HMA SURF REM-BUTT JOINT
- DRIVEWAY REMOVAL
- BRIDGE APPROACH SLAB REMOVAL
- TREE REMOVAL
- LINEAR ITEM REMOVAL
- BUILDING REMOVAL/ FOUNDATION REMOVAL
- MAILBOX REMOVAL

MODEL: Default
FILE NAME: pw:\\mbs-us-pw.bentley.com:mbs-us-pw-03\Documents\Chicago_IL\01 Projects\179740 IDOT Ceda-SExt PhII\5.0 CADD\CAD Sheets\D468C55-sht-REM Cedar St SW 4.dgn

| | | | | |
|---|---|---|---|---|
| Michael Baker INTERNATIONAL 200 W Adams Street Suite 1800 Chicago, IL 60606 PH: 312.707.8770 FAX: 312.707.8804 | USER NAME = DLamb | DESIGNED - TOM | REVISED - | STATE OF ILLINOIS DEPARTMENT OF TRANSPORTATION |
| | | DRAWN - MER | REVISED - | |
| | PLOT SCALE = 40.0000 ' / in. | CHECKED - MJK | REVISED - | |
| | PLOT DATE = 6/6/2023 | DATE - 6/08/2023 | REVISED - | |

**CEDAR ST. (IL-8/IL-116) OVER TZPR & IL-29**
**REMOVAL PLAN – CEDAR ST. (IL-8/IL-116)**

SCALE: 1"=20' | SHEET 4 OF 11 SHEETS | STA. 83+00.00 TO STA. 88+59.95

REM-04

| F.A.P. RTE. | SECTION | COUNTY | TOTAL SHEETS | SHEET NO. |
|---|---|---|---|---|
| VAR. | 13 (HVB, HB-3) BR-1;R | TAZEWELL | 1173 | 74 |
| | | CONTRACT NO. 68C55 | | |
| | | ILLINOIS FED. AID PROJECT | | |

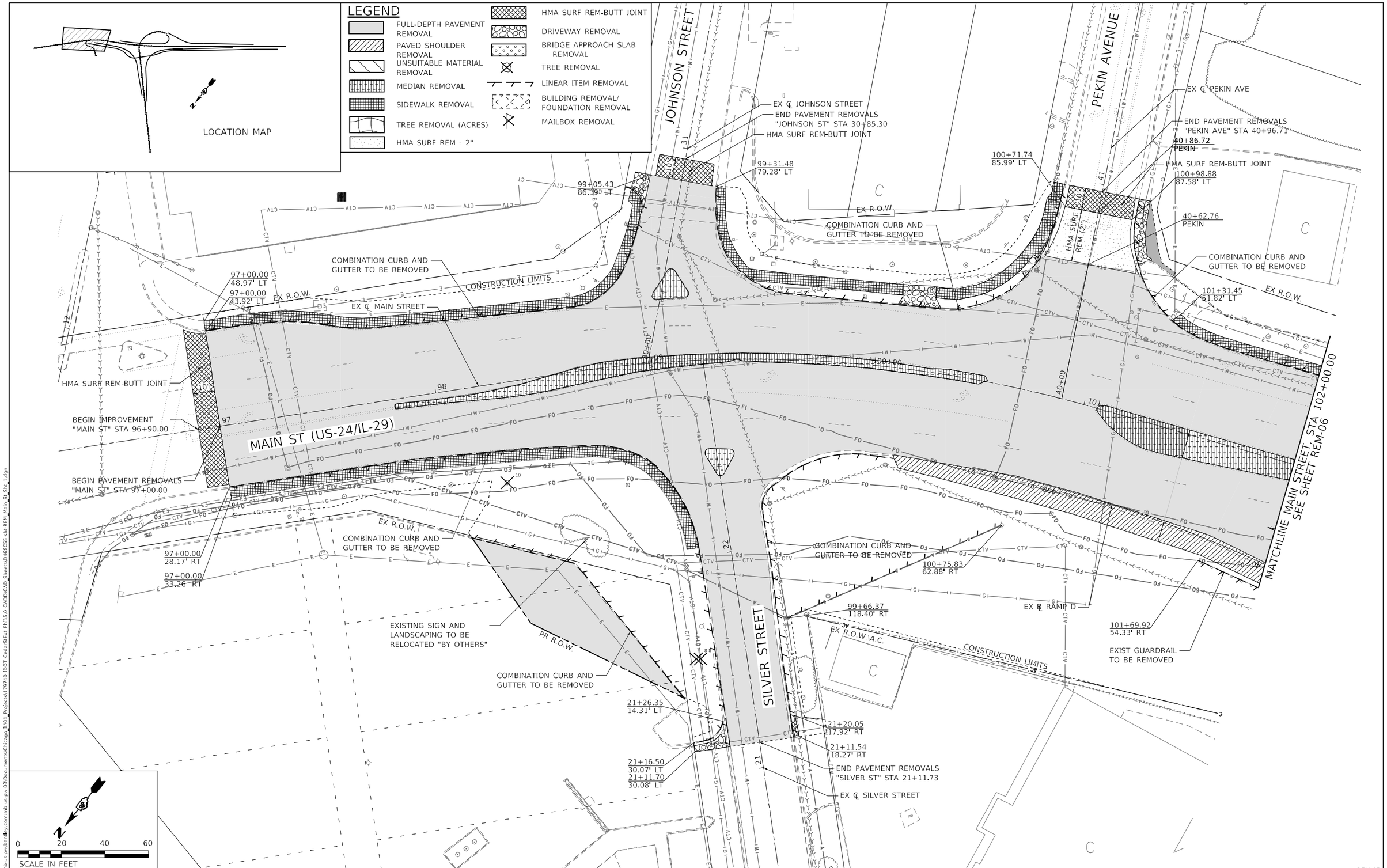


REM-05

| | | | | | | | | | |
|---|---|---|---|---|---|---|---|---|---|
| Michael Baker INTERNATIONAL 200 W Adams Street Suite 1800 Chicago, IL 60606 PH: 312.707.8772 FAX: 312.707.8804 | USER NAME = Winson.Teng | DESIGNED - TOM | REVISED - | STATE OF ILLINOIS DEPARTMENT OF TRANSPORTATION | CEDAR ST. (IL-8/IL-116) OVER TZPR & IL-29 REMOVAL PLAN – MAIN ST. (US-24/IL-29) | F.A.P. RTE. | SECTION | COUNTY | TOTAL SHEETS / SHEET NO. |
| | | DRAWN - MER | REVISED - | | | VAR. | 13 (HVB, HB-3) BR-1:R | TAZEWELL | 1173 / 75 |
| | PLOT SCALE = 40.0000 ' / in. | CHECKED - MJK | REVISED - | | | | | CONTRACT NO. 68C55 | |
| | PLOT DATE = 5/1/2025 | DATE - 4/08/2025 | REVISED - | | SCALE: 1"=20' / SHEET 5 OF 11 SHEETS / STA. 96+90.00 TO STA. 102+00.00 | | ILLINOIS | FED. AID PROJECT | |

MODEL: Default
FILE NAME: pw:\\mb-us-pw.bentley.com:mb-us-pw-03:Documents\Chicago_IL\01_Projects\179740 IDOT Cedar\SIEx PhII\5.0 CADD\CADD Sheets\0468C55-sht-REM Main St Sht_1.dgn

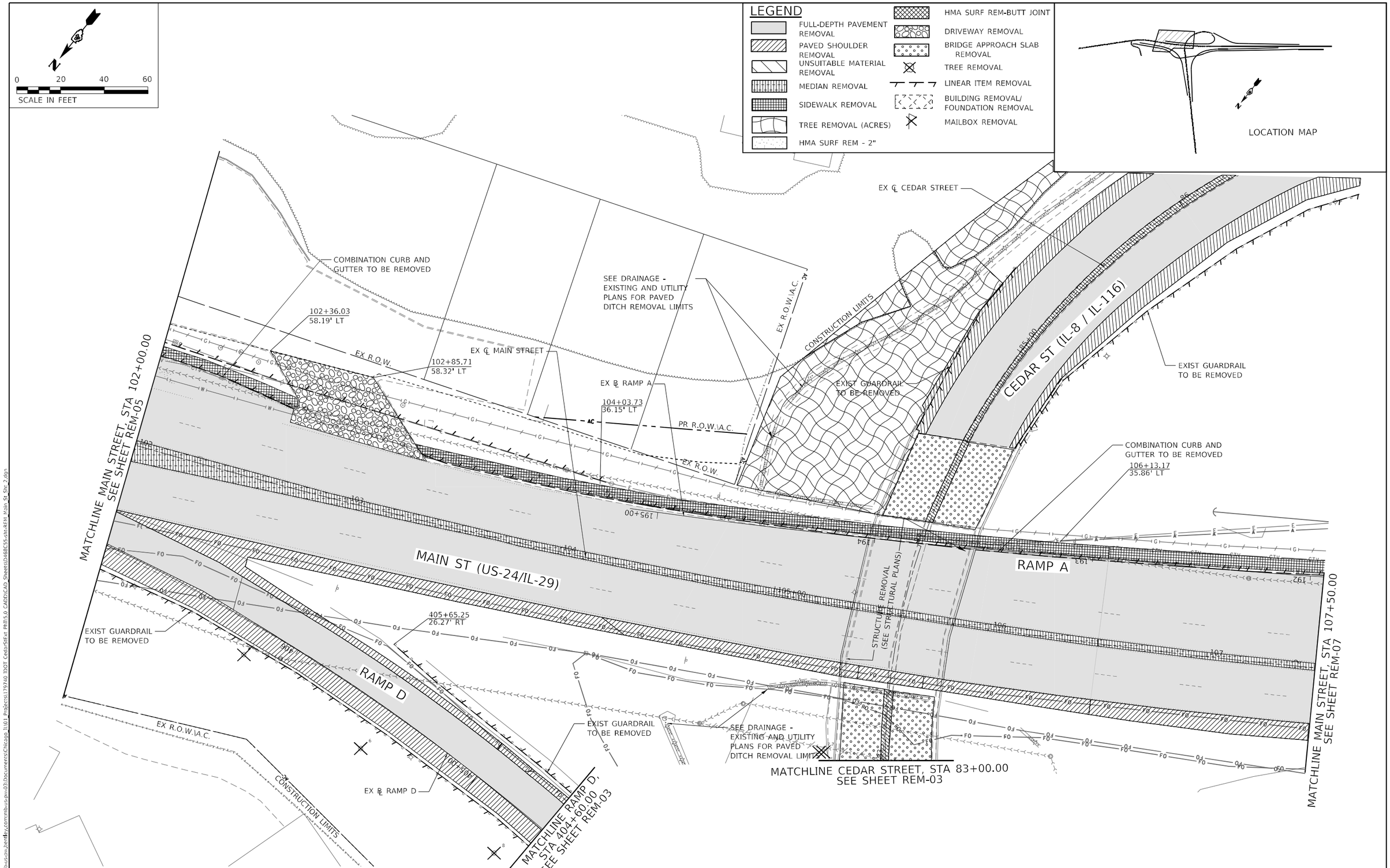


REM-06

| | | | |
|---|---|---|---|
| Michael Baker INTERNATIONAL, 200 W Adams Street, Suite 1800, Chicago, IL 60606, PH: 312.707.8772, FAX: 312.707.8804 | USER NAME = Winson.Teng | DESIGNED - TOM | REVISED - |
| | | DRAWN - MER | REVISED - |
| | PLOT SCALE = 40.0000 ' / in. | CHECKED - MJK | REVISED - |
| | PLOT DATE = 5/1/2025 | DATE - 4/08/2025 | REVISED - |

**STATE OF ILLINOIS**
**DEPARTMENT OF TRANSPORTATION**

**CEDAR ST. (IL-8/IL-116) OVER TZPR & IL-29**
**REMOVAL PLAN – MAIN ST. (US-24/IL-29)**

SCALE: 1"=20' | SHEET 6 OF 11 SHEETS | STA. 102+00.00 TO STA. 107+50.00

| F.A.P. RTE. | SECTION | COUNTY | TOTAL SHEETS | SHEET NO. |
|---|---|---|---|---|
| VAR. | 13 (HVB, HB-3) BR-1;R | TAZEWELL | 1173 | 76 |
| | | CONTRACT NO. 68C55 | | |
| | | ILLINOIS FED. AID PROJECT | | |

MODEL: Default
FILE NAME: pw:\\mbi-us-pw.bentley.com:mbi-us-pw\Documents\Chicago_IL\01 Projects\179740 IDOT Cedar-SE\4 PRH15.0 CADD\CAD Sheets\D468C55-sht-REM Main St Site 2.dgn

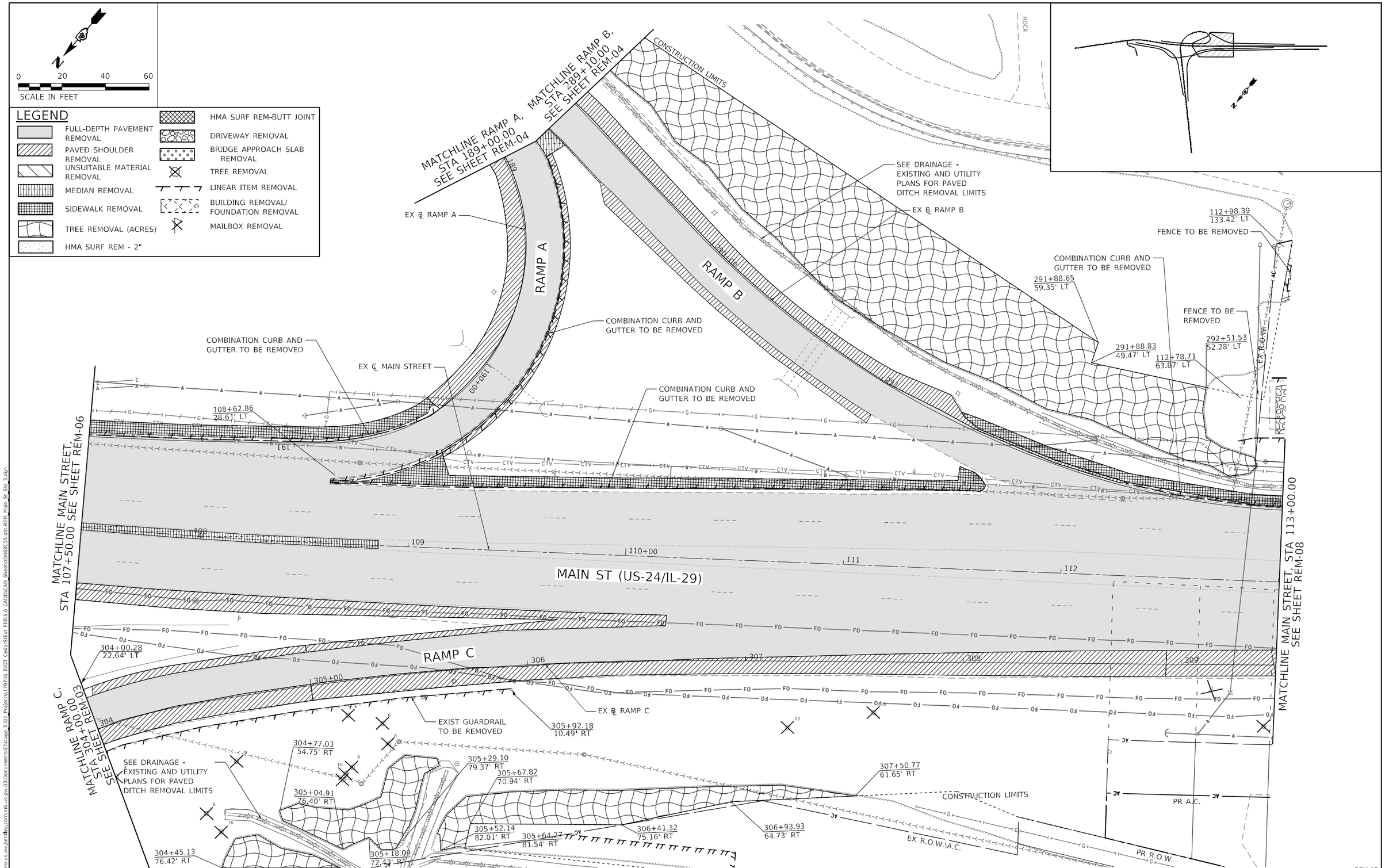


| | | | | | | | | | |
|---|---|---|---|---|---|---|---|---|---|
| Michael Baker INTERNATIONAL 200 W Adams Street Suite 1800 Chicago, IL 60606 P:+312.707.8772 FAX: 312.707.8804 | USER NAME = DLamb | DESIGNED - TOM | REVISED - | STATE OF ILLINOIS DEPARTMENT OF TRANSPORTATION | CEDAR ST. (IL-8/IL-116) OVER TZPR & IL-29 REMOVAL PLAN – MAIN ST. (US-24/IL-29) | F.A.P. RTE. | SECTION | COUNTY | TOTAL SHEETS | SHEET NO. |
| | | DRAWN - MER | REVISED - | | | VAR. | 13 (HVB, HB-3) BR-1:R | TAZEWELL | 1173 | 77 |
| | PLOT SCALE = 40.0000 ' / in. | CHECKED - MJK | REVISED - | | | | | CONTRACT NO. 68C55 | | |
| | PLOT DATE = 6/6/2023 | DATE - 6/08/2023 | REVISED - | | SCALE: 1"=20' SHEET 7 OF 11 SHEETS STA. 107+50.00 TO STA. 113+00.00 | | ILLINOIS | FED. AID PROJECT | | |

REM-07

MODEL: Default
FILE NAME: pw:\\mb-us-pw.bentley.com:mb-us-pw-03:Documents:Chicago_IL:01_Projects:179740 IDOT Cedar:Site 1 PhII:5.0 CADD:CAD Sheets:0468C55-sht-REM Main St Site 3.dgn

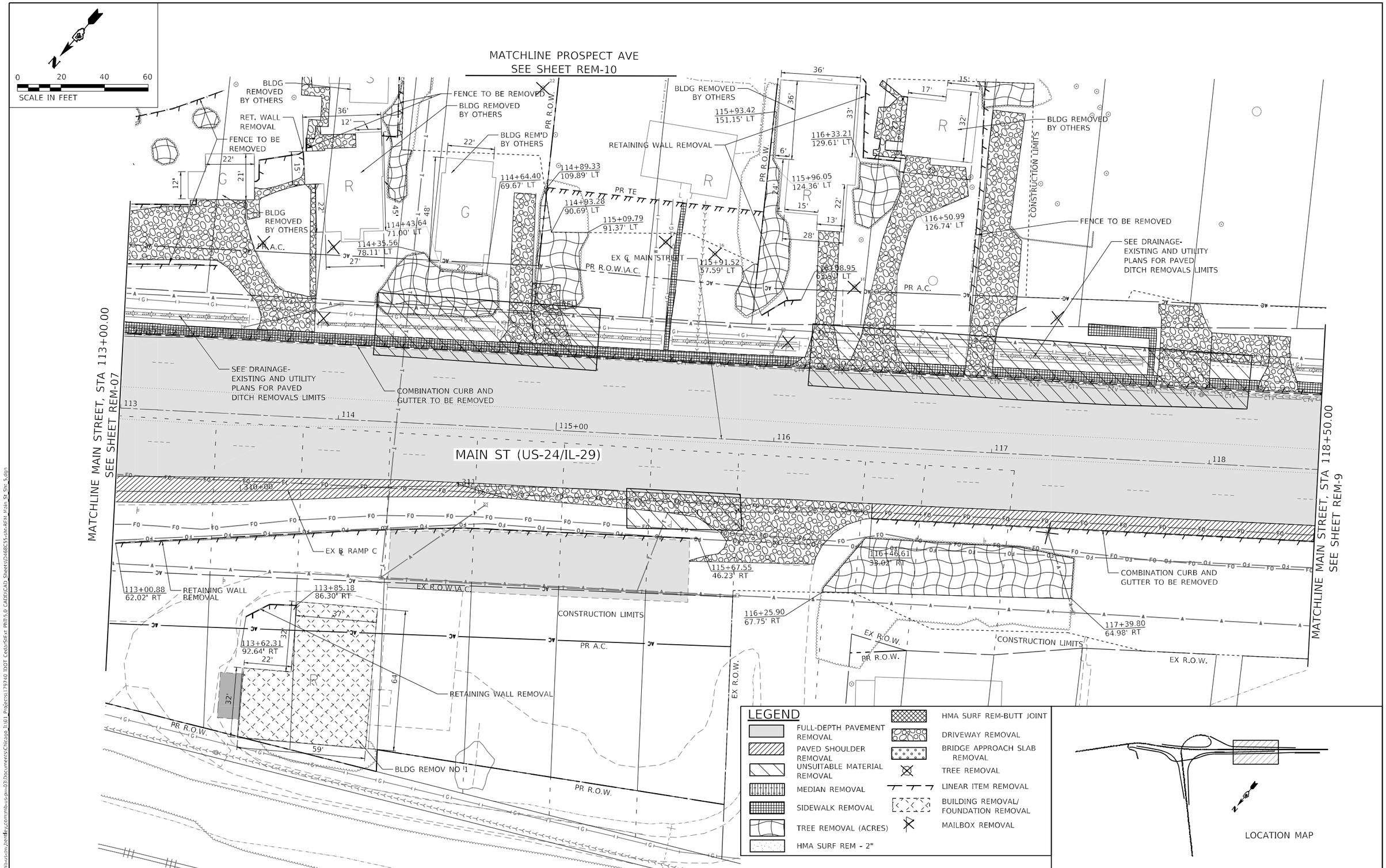


REM-08

| | | | |
|---|---|---|---|
| Michael Baker INTERNATIONAL 200 W Adams Street Suite 1800 Chicago, IL 60606 PH: 312.707.8770 FAX: 312.707.8804 | USER NAME = Winson.Teng | DESIGNED - TOM | REVISED - |
| | | DRAWN - MER | REVISED - |
| | PLOT SCALE = 40.0000 ' / in. | CHECKED - MJK | REVISED - |
| | PLOT DATE = 5/1/2025 | DATE - 4/08/2025 | REVISED - |

**STATE OF ILLINOIS**
**DEPARTMENT OF TRANSPORTATION**

**CEDAR ST. (IL-8/IL-116) OVER TZPR & IL-29**
**REMOVAL PLAN – MAIN ST. (US-24/IL-29)**

SCALE: 1"=20' | SHEET 8 OF 11 SHEETS | STA. 113+00.00 TO STA. 118+50.00

| F.A.P. RTE. | SECTION | COUNTY | TOTAL SHEETS | SHEET NO. |
|---|---|---|---|---|
| VAR. | 13 (HVB, HB-3) BR-1;R | TAZEWELL | 1173 | 78 |
| | | CONTRACT NO. 68C55 | | |
| | ILLINOIS | FED. AID PROJECT | | |

MODEL: Default
FILE NAME: pw:\\mw-ipw.bentley.com:mb-ipw-03\Documents\Chicago_IL\01 Projects\179740 IDOT Cedar\Sext PhII\5.0 CADD\CAD Sheets\0468C55-sht-REM Main St Sht 5.dgn

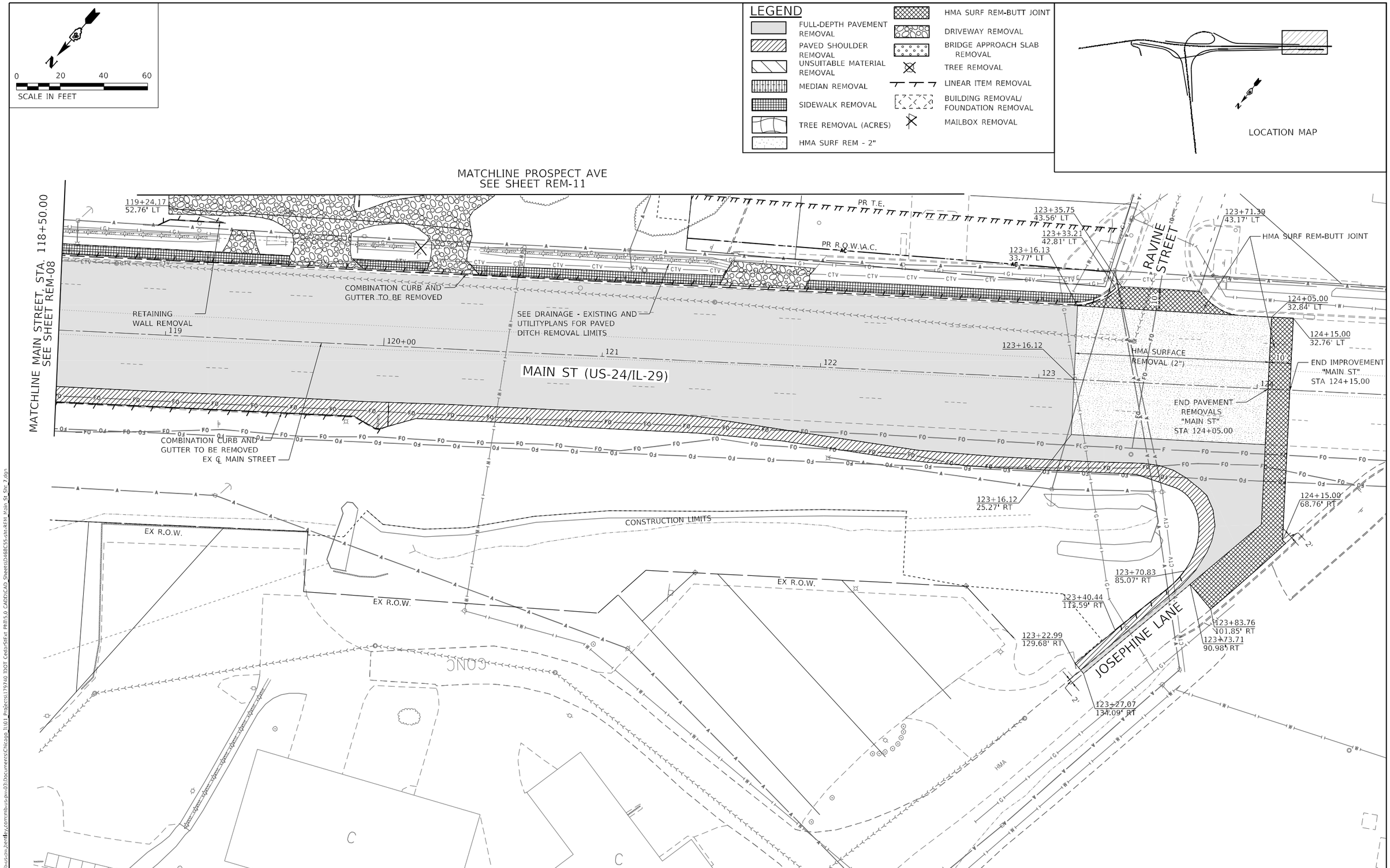


MODEL: Default
FILE NAME: pw:\\mb-us-pw.bentley.com:mb-us-pw-03\Documents\Chicago IL\01 Projects\179740 IDOT Cedar\SiEx Phll5.0 CADD\CAD Sheets\D468C55-sht-REM Main St Sht-7.dgn

| | | | | | |
|---|---|---|---|---|---|
| Michael Baker INTERNATIONAL 200 W Adams Street Suite 1800 Chicago, IL 60606 PH: 312.707.8770 FAX: 312.707.8804 | USER NAME = DLamb | DESIGNED - TOM | REVISED - | STATE OF ILLINOIS DEPARTMENT OF TRANSPORTATION | CEDAR ST. (IL-8/IL-116) OVER TZPR & IL-29 REMOVAL PLAN – MAIN ST. (US-24/IL-29) |
| | | DRAWN - MER | REVISED - | | |
| | PLOT SCALE = 40.0000 ' / in. | CHECKED - MJK | REVISED - | | |
| | PLOT DATE = 6/6/2023 | DATE - 6/08/2023 | REVISED - | | SCALE: 1"=20' SHEET 9 OF 11 SHEETS STA. 118+50.00 TO STA. 124+15.00 |

| F.A.P. RTE. | SECTION | COUNTY | TOTAL SHEETS | SHEET NO. |
|---|---|---|---|---|
| VAR. | 13 (HVB, HB-3) 8R-1:R | TAZEWELL | 1173 | 79 |
| | | CONTRACT NO. 68C55 | | |
| | ILLINOIS | FED. AID PROJECT | | |

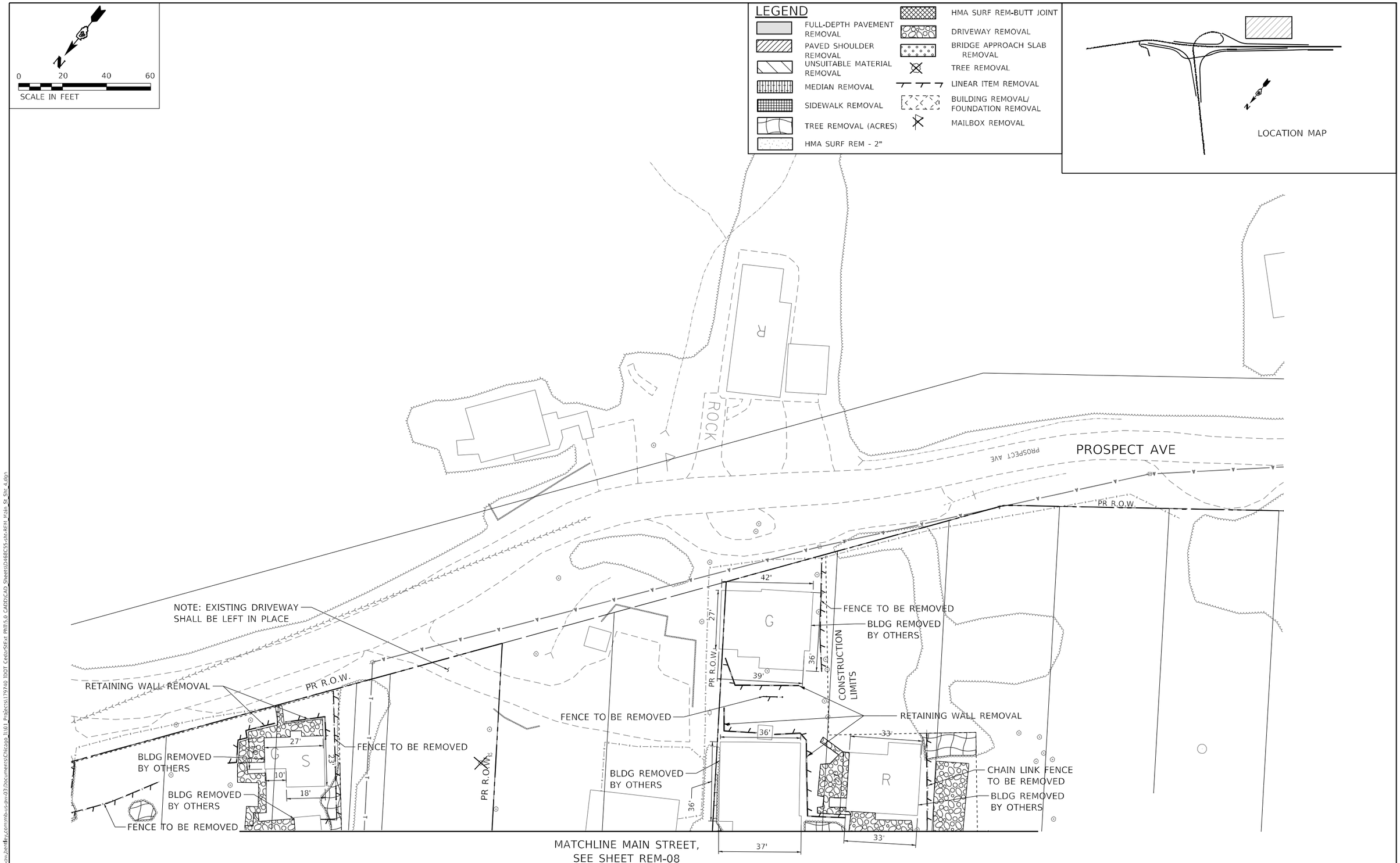


MODEL: Default
FILE NAME: pw:\\mbakerintl-pw.bentley.com:mbakerintl-pw-03\Documents\Chicago IL\01 Projects\179740 IDOT Ceda/SFxt Ph1\5.0 CADD\CAD Sheets\D468C55-sht-REM Main St Sht 4.dgn

| | | | | | |
|---|---|---|---|---|---|
| Michael Baker INTERNATIONAL 200 W Adams Street Suite 1800 Chicago, IL 60606 P:+1 312.707.8770 FAX: 312.707.8804 | USER NAME = Winsen.Teng | DESIGNED - TOM | REVISED - | STATE OF ILLINOIS DEPARTMENT OF TRANSPORTATION | CEDAR ST. (IL-8/IL-116) OVER TZPR & IL-29 REMOVAL PLAN – PROSPECT AVE |
| | | DRAWN - MER | REVISED - | | |
| | PLOT SCALE = 40.0000 ' / in. | CHECKED - MJK | REVISED - | | |
| | PLOT DATE = 5/1/2025 | DATE - 4/08/2025 | REVISED - | | SCALE: 1"=20' SHEET 10 OF 11 SHEETS STA. 113+00.00 TO STA. 118+50.00 |

REM-10

| F.A.P. RTE. | SECTION | COUNTY | TOTAL SHEETS | SHEET NO. |
|---|---|---|---|---|
| VAR. | 13 (HVB, HB-3) BR-1;R | TAZEWELL | 1173 | 80 |
| | | CONTRACT NO. 68C55 | | |
| | ILLINOIS | FED. AID PROJECT | | |

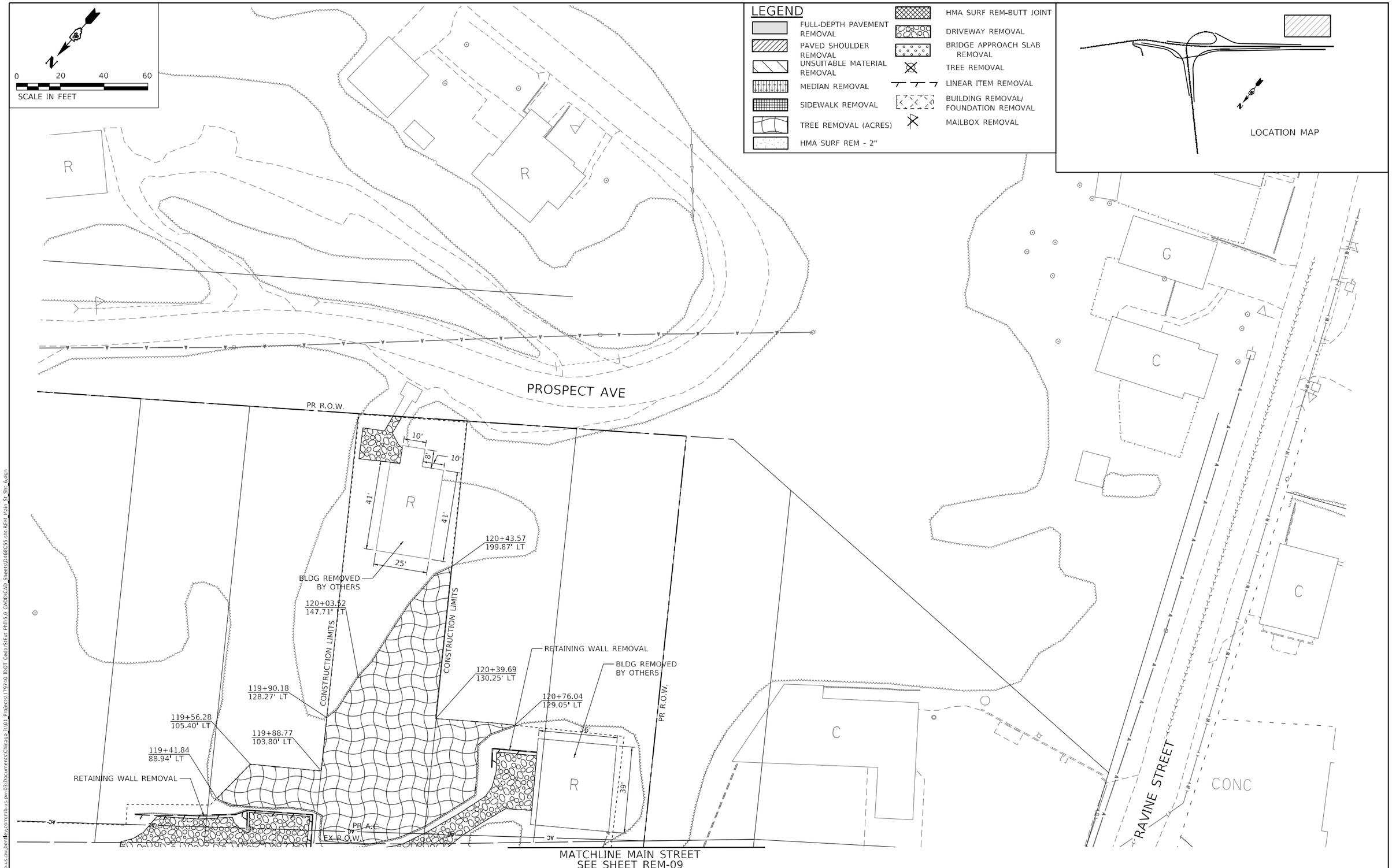


REM-11

| | | | |
|---|---|---|---|
| Michael Baker INTERNATIONAL 200 W Adams Street Suite 1800 Chicago, IL 60606 PH: 312.707.8772 FAX: 312.707.8804 | USER NAME = Winson.Teng | DESIGNED - TOM | REVISED - |
| | | DRAWN - MER | REVISED - |
| | PLOT SCALE = 40.0000 ' / in. | CHECKED - MJK | REVISED - |
| | PLOT DATE = 5/1/2025 | DATE - 4/08/2025 | REVISED - |

**STATE OF ILLINOIS**
**DEPARTMENT OF TRANSPORTATION**

**CEDAR ST. (IL-8/IL-116) OVER TZPR & IL-29**
**REMOVAL PLAN – PROSPECT AVE**

SCALE: 1"=20' | SHEET 11 OF 11 SHEETS | STA. 118+50.00 TO STA. 123+92.72

| F.A.P. RTE. | SECTION | COUNTY | TOTAL SHEETS | SHEET NO. |
|---|---|---|---|---|
| VAR. | 13 (HVB, HB-3) BR-1;R | TAZEWELL | 1173 | 81 |
| | | CONTRACT NO. 68C55 | | |
| | ILLINOIS | FED. AID PROJECT | | |

MODEL: Default
FILE NAME: pw:\\mis-iu-pw.bentley.com:mb-ic-pw-03\Documents\Chicago_IL\01 Projects\179740 IDOT Cedar-Sixth Phase 5.0 CADD\CAD Sheets\D-68C55-sht-REM Main St SW 6.dgn

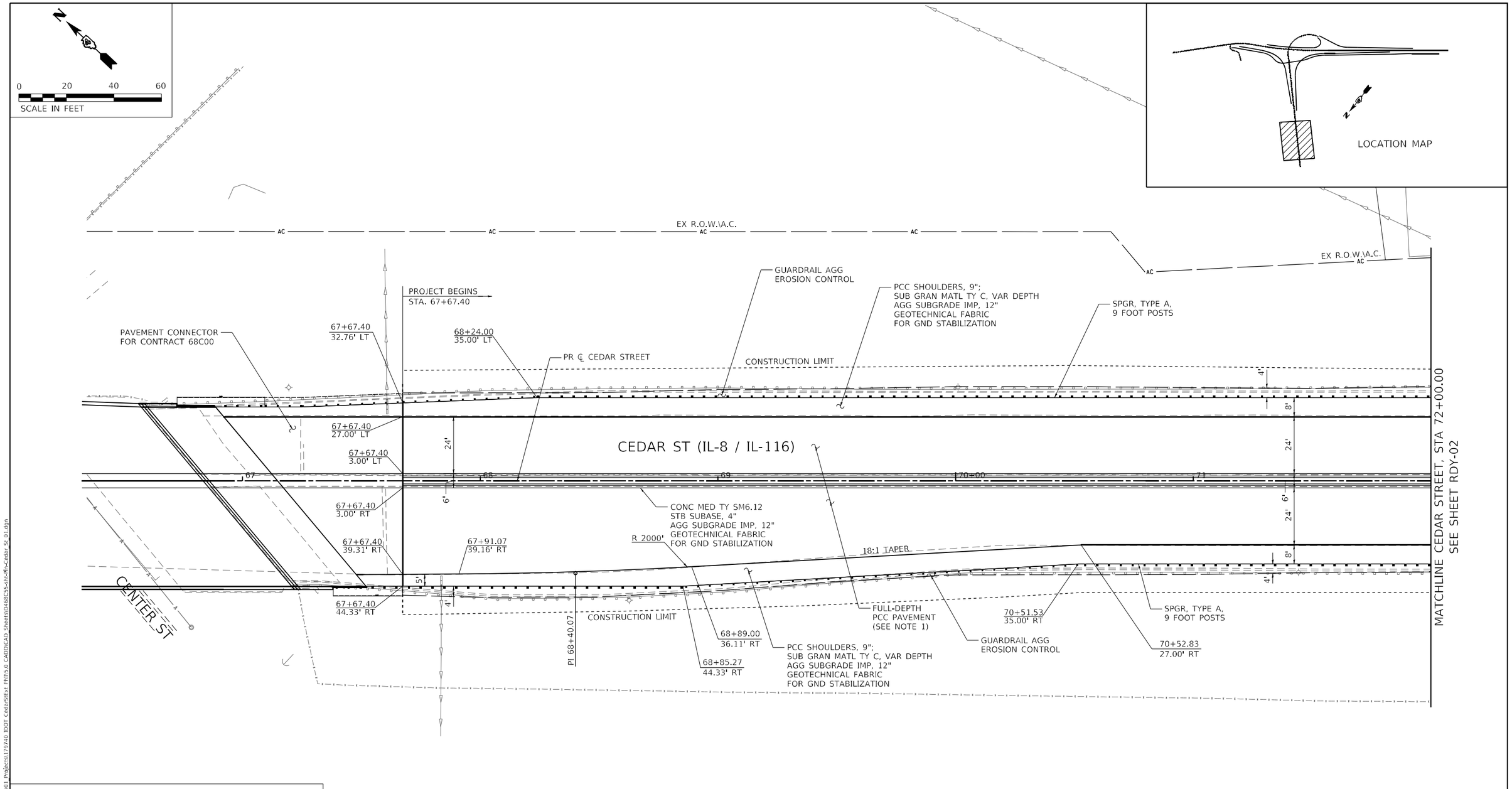


ROADWAY NOTES

1. PAVEMENT SECTION (CEDAR STREET)
   - 42000401 PORTLAND CEMENT CONCRETE PAVEMENT (JOINTED), 9"
   - 31200100 STABILIZED SUBBASE, 4"
   - 30300112 AGGREGATE SUBGRADE IMPROVEMENT, 12"
   - 21001000 GEOTECHNICAL FABRIC FOR GROUND STABILIZATION
2. PAVEMENT SECTION (RAMPS)
   - 42000401 PORTLAND CEMENT CONCRETE PAVEMENT (JOINTED), 9"
   - 31200100 STABILIZED SUBBASE, 4"
   - 30300112 AGGREGATE SUBGRADE IMPROVEMENT, 12"
   - 21001000 GEOTECHNICAL FABRIC FOR GROUND STABILIZATION
3. PAVEMENT SECTION (MAIN STREET AND SILVER STREET)
   - 42000401 PORTLAND CEMENT CONCRETE PAVEMENT (JOINTED), 9"
   - 30300112 AGGREGATE SUBGRADE IMPROVEMENT, 12"
   - 21001000 GEOTECHNICAL FABRIC FOR GROUND STABILIZATION

Michael Baker INTERNATIONAL
200 W Adams Street
Suite 1800
Chicago, IL 60606
P: 312.707.8770
FAX: 312.707.8804

| | | |
|---|---|---|
| USER NAME = Winsen.Teng | DESIGNED - SAS | REVISED - |
| | DRAWN - DCL | REVISED - |
| PLOT SCALE = 40.0000 ' / in. | CHECKED - RBB | REVISED - |
| PLOT DATE = 5/1/2025 | DATE - 4/08/2025 | REVISED - |

**STATE OF ILLINOIS**
**DEPARTMENT OF TRANSPORTATION**

**CEDAR ST. (IL-8/IL-116) OVER TZPR & IL-29**
**PROPOSED ROADWAY PLAN – CEDAR STREET**

SCALE: 1"=20' | SHEET 1 OF 22 SHEETS | STA. 67+67.40 TO STA. 72+00.00

RDY-01

| F.A.P. RTE. | SECTION | COUNTY | TOTAL SHEETS | SHEET NO. |
|---|---|---|---|---|
| VAR. | 13 (HVB, HB-3) BR-1:R | TAZEWELL | 1173 | 82 |
| | | CONTRACT NO. 68C55 | | |
| | ILLINOIS | FED. AID PROJECT | | |

MODEL: Default
FILE NAME: pw:\\mi-us-pw.bentley.com:mi-us-pw-03\Documents\Chicago IL\01 Projects\179740 IDOT Cedar\Sfxt Plan\5.0 CADD\CAD Sheets\D268C55-sht-Pl-Cedar_S-01.dgn

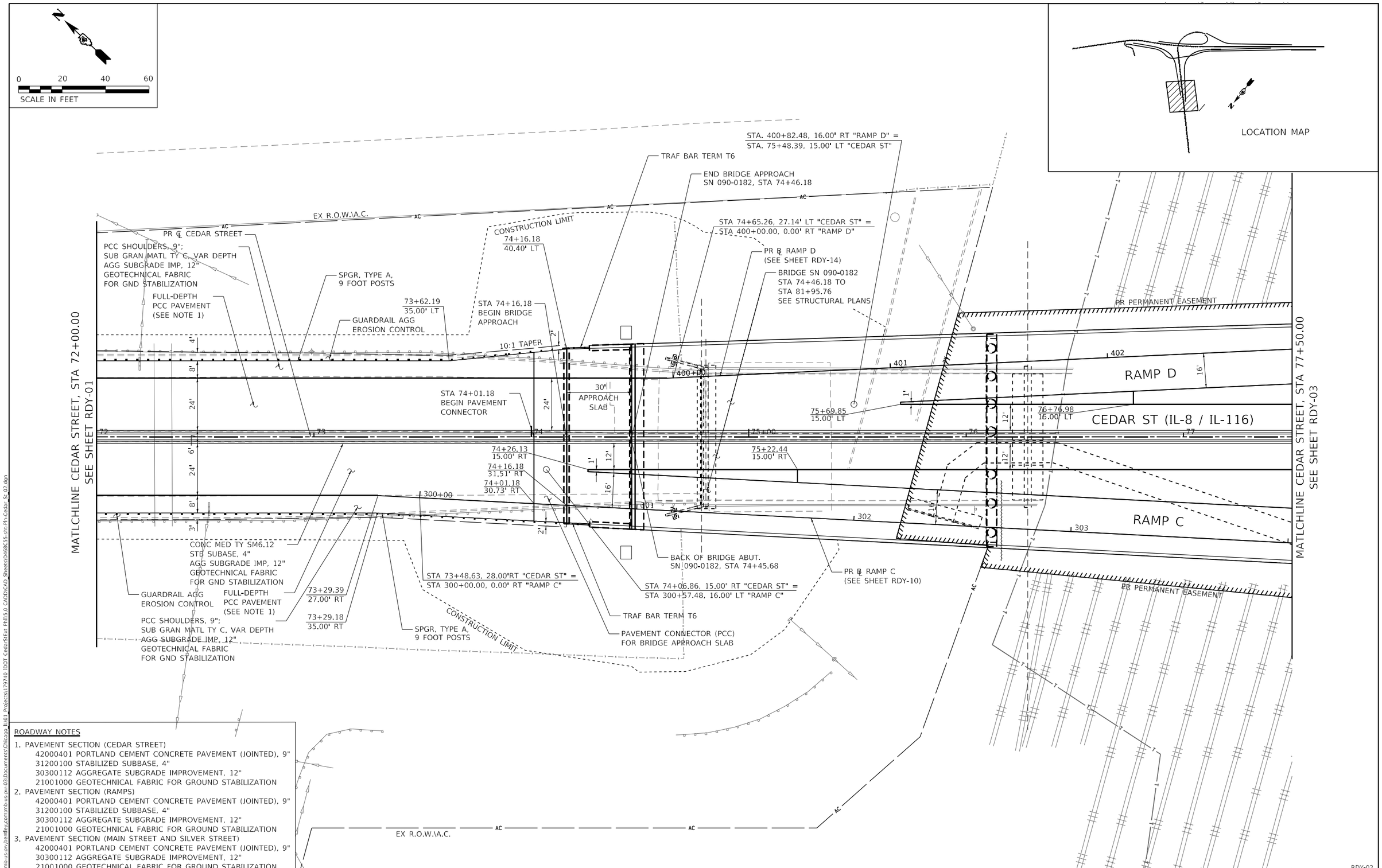


ROADWAY NOTES

1. PAVEMENT SECTION (CEDAR STREET)
   - 42000401 PORTLAND CEMENT CONCRETE PAVEMENT (JOINTED), 9"
   - 31200100 STABILIZED SUBBASE, 4"
   - 30300112 AGGREGATE SUBGRADE IMPROVEMENT, 12"
   - 21001000 GEOTECHNICAL FABRIC FOR GROUND STABILIZATION
2. PAVEMENT SECTION (RAMPS)
   - 42000401 PORTLAND CEMENT CONCRETE PAVEMENT (JOINTED), 9"
   - 31200100 STABILIZED SUBBASE, 4"
   - 30300112 AGGREGATE SUBGRADE IMPROVEMENT, 12"
   - 21001000 GEOTECHNICAL FABRIC FOR GROUND STABILIZATION
3. PAVEMENT SECTION (MAIN STREET AND SILVER STREET)
   - 42000401 PORTLAND CEMENT CONCRETE PAVEMENT (JOINTED), 9"
   - 30300112 AGGREGATE SUBGRADE IMPROVEMENT, 12"
   - 21001000 GEOTECHNICAL FABRIC FOR GROUND STABILIZATION

RDY-02

MODEL: Default
FILE NAME: pw:\\mbi-ucs-pw.bentley.com:mbi-ucs-pw-03\Documents\Chicago IL\01 Projects\179740 IDOT Ceda/SFxt PRJ15.0 CADD\CAD Sheets\D468C55-sht-Pl-Cedar S-02.dgn


Michael Baker INTERNATIONAL
200 W Adams Street
Suite 1800
Chicago, IL 60606
P: 312.707.8770
FAX: 312.707.8804


| | | |
|---|---|---|
| USER NAME = DLamb | DESIGNED - SAS | REVISED - |
| | DRAWN - DCL | REVISED - |
| PLOT SCALE = 40.0000 ' / in. | CHECKED - RBB | REVISED - |
| PLOT DATE = 6/6/2023 | DATE - 6/08/2023 | REVISED - |

**STATE OF ILLINOIS**
**DEPARTMENT OF TRANSPORTATION**

**CEDAR ST. (IL-8/IL-116) OVER TZPR & IL-29**
**PROPOSED ROADWAY PLAN – CEDAR STREET**

SCALE: 1"=20' | SHEET 2 OF 22 SHEETS | STA. 72+00.00 TO STA. 77+50.00

| F.A.P. RTE. | SECTION | COUNTY | TOTAL SHEETS | SHEET NO. |
|---|---|---|---|---|
| VAR. | 13 (HVB, HB-3) BR-1;R | TAZEWELL | 1173 | 83 |
| | | CONTRACT NO. 68C55 | | |
| | ILLINOIS | FED. AID PROJECT | | |

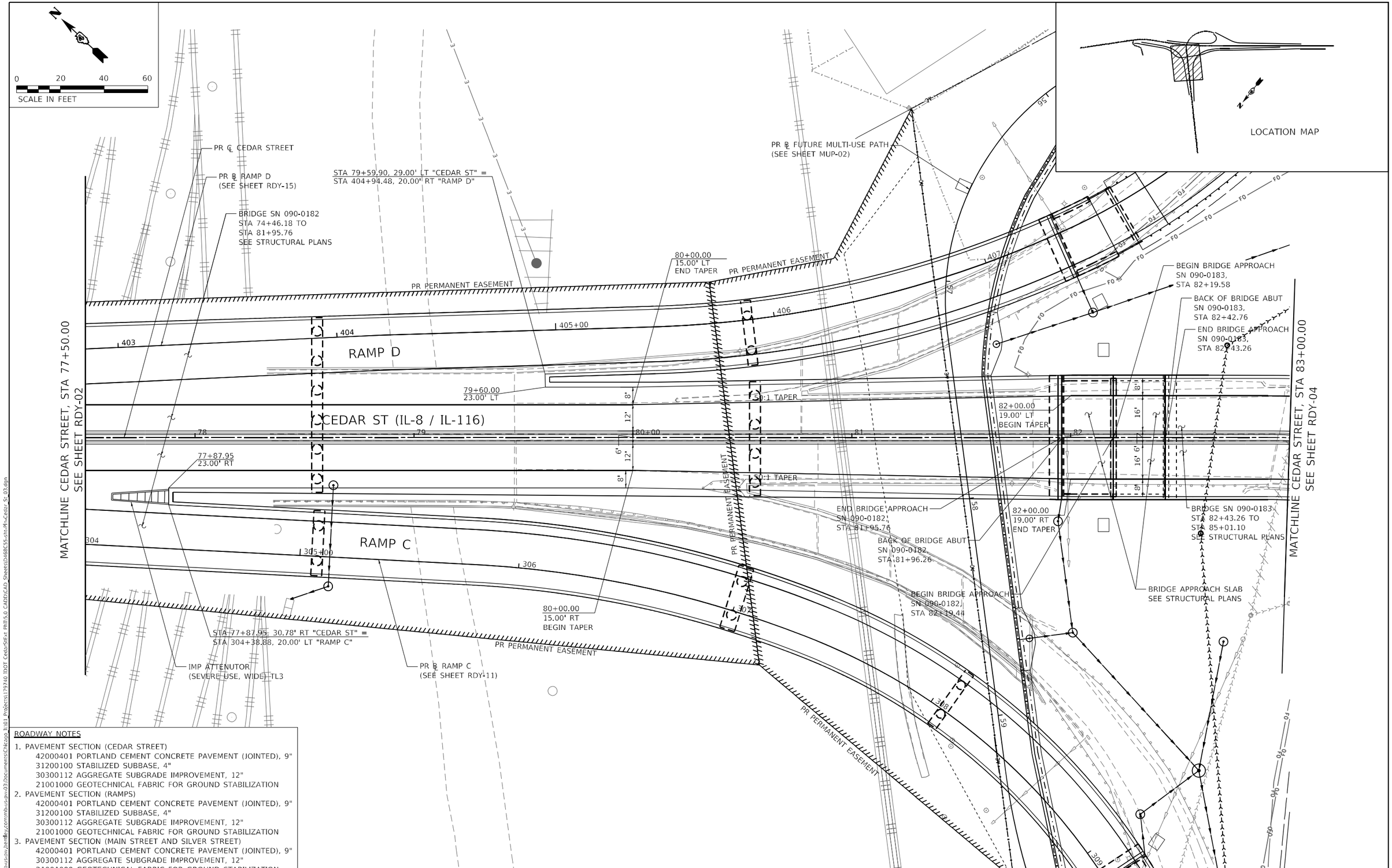


ROADWAY NOTES

1. PAVEMENT SECTION (CEDAR STREET)
   - 42000401 PORTLAND CEMENT CONCRETE PAVEMENT (JOINTED), 9"
   - 31200100 STABILIZED SUBBASE, 4"
   - 30300112 AGGREGATE SUBGRADE IMPROVEMENT, 12"
   - 21001000 GEOTECHNICAL FABRIC FOR GROUND STABILIZATION
2. PAVEMENT SECTION (RAMPS)
   - 42000401 PORTLAND CEMENT CONCRETE PAVEMENT (JOINTED), 9"
   - 31200100 STABILIZED SUBBASE, 4"
   - 30300112 AGGREGATE SUBGRADE IMPROVEMENT, 12"
   - 21001000 GEOTECHNICAL FABRIC FOR GROUND STABILIZATION
3. PAVEMENT SECTION (MAIN STREET AND SILVER STREET)
   - 42000401 PORTLAND CEMENT CONCRETE PAVEMENT (JOINTED), 9"
   - 30300112 AGGREGATE SUBGRADE IMPROVEMENT, 12"
   - 21001000 GEOTECHNICAL FABRIC FOR GROUND STABILIZATION

RDY-03

MODEL: Default
FILE NAME: pw:\\mb-us-pw.bentley.com:mb-us-pw-03\Documents\Chicago IL\01 Projects\179740 IDOT Cedar\Site1 Phll\5.0 CADD\CAD Sheets\0468C55-sht-IN-Cedar_St_03.dgn


Michael Baker INTERNATIONAL
200 W Adams Street
Suite 1800
Chicago, IL 60606
P: 312.707.8770
FAX: 312.707.8804


| | | | |
|---|---|---|---|
| USER NAME = DLamb | DESIGNED - SAS | REVISED - | |
| | DRAWN - DCL | REVISED - | |
| PLOT SCALE = 40.0000 ' / in. | CHECKED - RBB | REVISED - | |
| PLOT DATE = 6/6/2023 | DATE - 6/08/2023 | REVISED - | |

**STATE OF ILLINOIS**
**DEPARTMENT OF TRANSPORTATION**

**CEDAR ST. (IL-8/IL-116) OVER TZPR & IL-29**
**PROPOSED ROADWAY PLAN – CEDAR STREET**

SCALE: 1"=20' | SHEET 3 OF 22 SHEETS | STA. 77+50.00 TO STA. 83+00.00

| F.A.P. RTE. | SECTION | COUNTY | TOTAL SHEETS | SHEET NO. |
|---|---|---|---|---|
| VAR. | 13 (HVB, HB-3) BR-1;R | TAZEWELL | 1173 | 84 |
| | | CONTRACT NO. 68C55 | | |
| | ILLINOIS | FED. AID PROJECT | | |

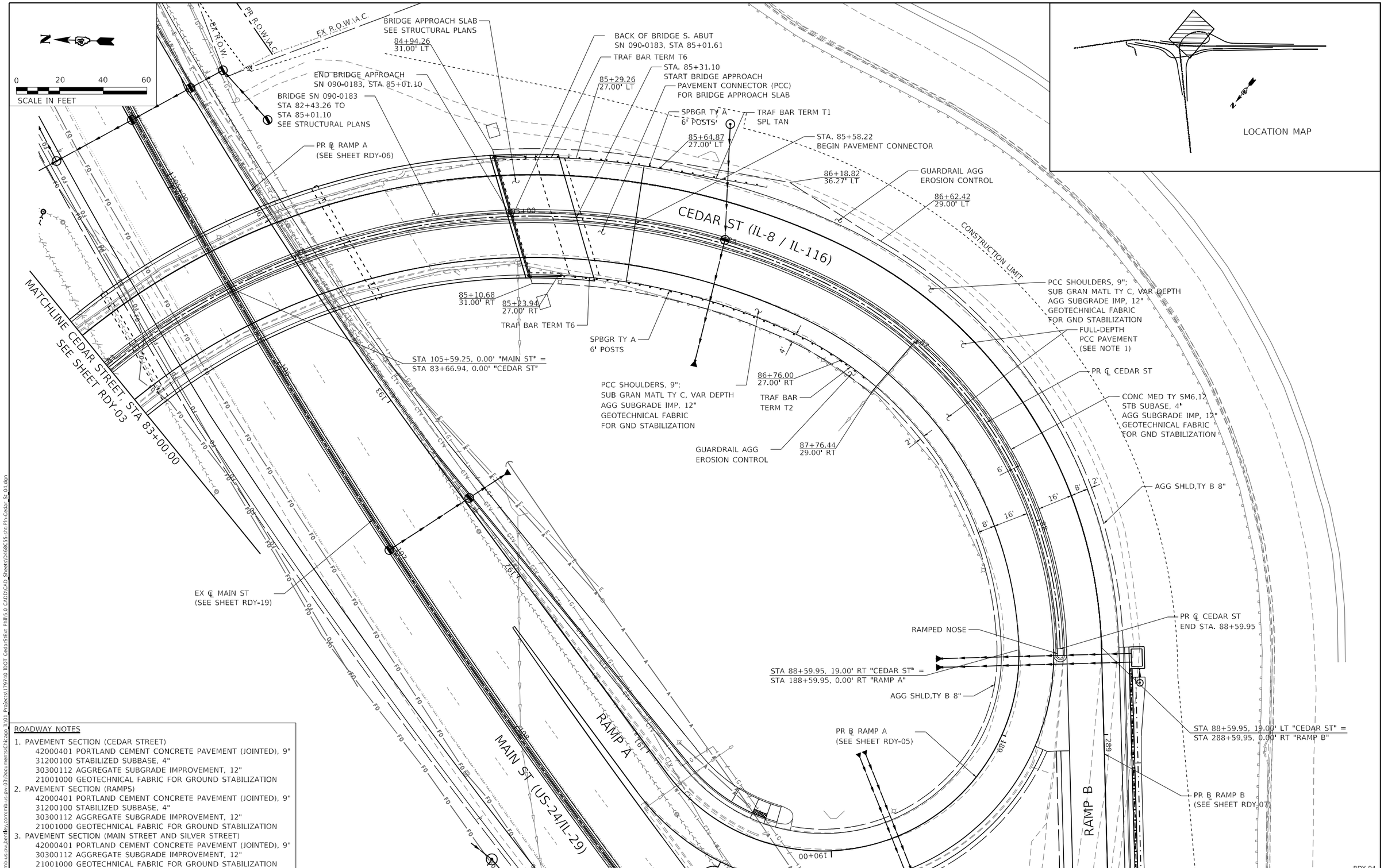


ROADWAY NOTES

1. PAVEMENT SECTION (CEDAR STREET)
   - 42000401 PORTLAND CEMENT CONCRETE PAVEMENT (JOINTED), 9"
   - 31200100 STABILIZED SUBBASE, 4"
   - 30300112 AGGREGATE SUBGRADE IMPROVEMENT, 12"
   - 21001000 GEOTECHNICAL FABRIC FOR GROUND STABILIZATION
2. PAVEMENT SECTION (RAMPS)
   - 42000401 PORTLAND CEMENT CONCRETE PAVEMENT (JOINTED), 9"
   - 31200100 STABILIZED SUBBASE, 4"
   - 30300112 AGGREGATE SUBGRADE IMPROVEMENT, 12"
   - 21001000 GEOTECHNICAL FABRIC FOR GROUND STABILIZATION
3. PAVEMENT SECTION (MAIN STREET AND SILVER STREET)
   - 42000401 PORTLAND CEMENT CONCRETE PAVEMENT (JOINTED), 9"
   - 30300112 AGGREGATE SUBGRADE IMPROVEMENT, 12"
   - 21001000 GEOTECHNICAL FABRIC FOR GROUND STABILIZATION

RDY-04

MODEL: Default
FILE NAME: pw:\\mb-us-pw.bentley.com:mb-us-pw-03\Documents\Chicago\IL\01 Projects\179740 IDOT Cedar\SHEX Phil\5.0 CADD\CAD Sheets\0468C55-sht-Ph-Cedar St-04.dgn

Michael Baker INTERNATIONAL
200 W Adams Street
Suite 1800
Chicago, IL 60606
PH: 312.707.8770
FAX: 312.707.8804

| | | | |
|---|---|---|---|
| USER NAME = DLamb | DESIGNED - SAS | REVISED - | |
| | DRAWN - DCL | REVISED - | |
| PLOT SCALE = 40.0000 ' / in. | CHECKED - RBB | REVISED - | |
| PLOT DATE = 6/6/2023 | DATE - 6/08/2023 | REVISED - | |

**STATE OF ILLINOIS**
**DEPARTMENT OF TRANSPORTATION**

**CEDAR ST. (IL-8.IL-116) OVER TZPR & IL-29**
**PROPOSED ROADWAY PLAN – CEDAR STREET**

SCALE: 1"=20' | SHEET 4 OF 22 SHEETS | STA. 83+00.00 TO STA. 88+59.95

| F.A.P. RTE. | SECTION | COUNTY | TOTAL SHEETS | SHEET NO. |
|---|---|---|---|---|
| VAR. | 13 (HVB, HB-3) BR-1;R | TAZEWELL | 1173 | 85 |
| | | CONTRACT NO. 68C55 | | |
| | | ILLINOIS | FED. AID PROJECT | |

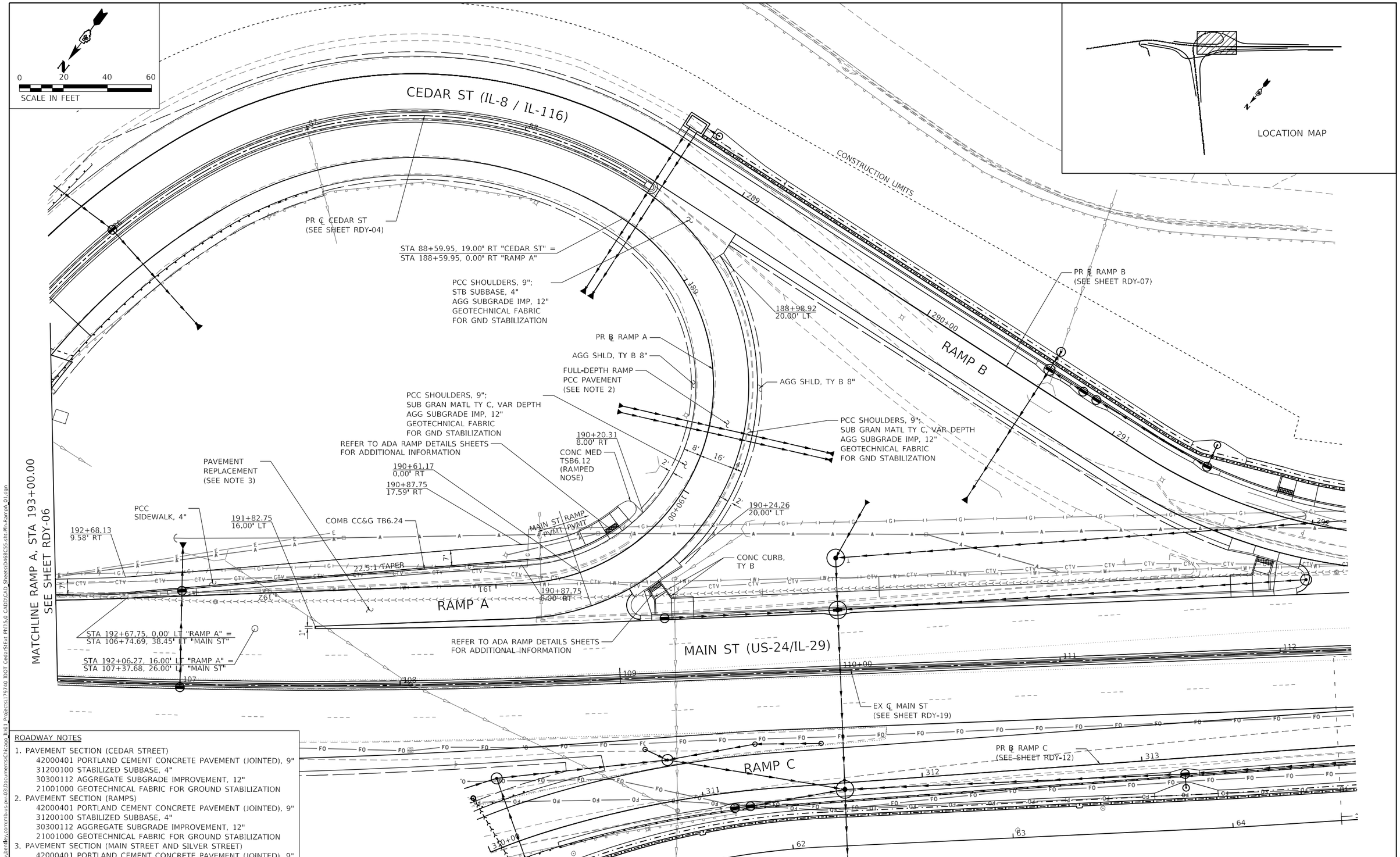


ROADWAY NOTES

1. PAVEMENT SECTION (CEDAR STREET)
   - 42000401 PORTLAND CEMENT CONCRETE PAVEMENT (JOINTED), 9"
   - 31200100 STABILIZED SUBBASE, 4"
   - 30300112 AGGREGATE SUBGRADE IMPROVEMENT, 12"
   - 21001000 GEOTECHNICAL FABRIC FOR GROUND STABILIZATION
2. PAVEMENT SECTION (RAMPS)
   - 42000401 PORTLAND CEMENT CONCRETE PAVEMENT (JOINTED), 9"
   - 31200100 STABILIZED SUBBASE, 4"
   - 30300112 AGGREGATE SUBGRADE IMPROVEMENT, 12"
   - 21001000 GEOTECHNICAL FABRIC FOR GROUND STABILIZATION
3. PAVEMENT SECTION (MAIN STREET AND SILVER STREET)
   - 42000401 PORTLAND CEMENT CONCRETE PAVEMENT (JOINTED), 9"
   - 30300112 AGGREGATE SUBGRADE IMPROVEMENT, 12"
   - 21001000 GEOTECHNICAL FABRIC FOR GROUND STABILIZATION

RDY-05

Michael Baker INTERNATIONAL
200 W Adams Street
Suite 1800
Chicago, IL 60606
PH: 312.707.8770
FAX: 312.707.8804

| | | | |
|---|---|---|---|
| USER NAME = DLamb | DESIGNED - SAS | REVISED - | |
| | DRAWN - DCL | REVISED - | |
| PLOT SCALE = 40.0000 ' / in. | CHECKED - RBB | REVISED - | |
| PLOT DATE = 6/6/2023 | DATE - 6/08/2023 | REVISED - | |

**STATE OF ILLINOIS**
**DEPARTMENT OF TRANSPORTATION**

**CEDAR ST. (IL-8/IL-116) OVER TZPR & IL-29**
**PROPOSED ROADWAY PLAN – RAMP A**

SCALE: 1"=20' | SHEET 5 OF 22 SHEETS | STA. 188+59.95 TO STA. 193+00.00

| F.A.P. RTE. | SECTION | COUNTY | TOTAL SHEETS | SHEET NO. |
|---|---|---|---|---|
| VAR. | 13 (HVB, HB-3) BR-1:R | TAZEWELL | 1173 | 86 |
| | | CONTRACT NO. 68C55 | | |
| | ILLINOIS | FED. AID PROJECT | | |

MODEL: Default
FILE NAME: pw:\\mb-us-pw.bentley.com:mb-us-pw-03\Documents\Chicago IL\01 Projects\179740 IDOT Cedar\Site# Phil\5.0 CADD\CAD Sheets\0468C55-sht-Pl-RampA-01.dgn

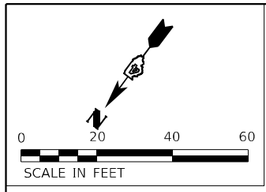


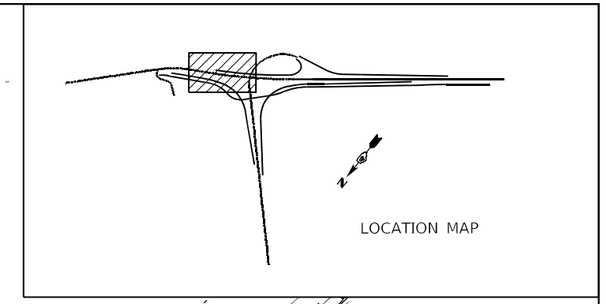



ROADWAY NOTES

1. PAVEMENT SECTION (CEDAR STREET)
   - 42000401 PORTLAND CEMENT CONCRETE PAVEMENT (JOINTED), 9"
   - 31200100 STABILIZED SUBBASE, 4"
   - 30300112 AGGREGATE SUBGRADE IMPROVEMENT, 12"
   - 21001000 GEOTECHNICAL FABRIC FOR GROUND STABILIZATION
2. PAVEMENT SECTION (RAMPS)
   - 42000401 PORTLAND CEMENT CONCRETE PAVEMENT (JOINTED), 9"
   - 31200100 STABILIZED SUBBASE, 4"
   - 30300112 AGGREGATE SUBGRADE IMPROVEMENT, 12"
   - 21001000 GEOTECHNICAL FABRIC FOR GROUND STABILIZATION
3. PAVEMENT SECTION (MAIN STREET AND SILVER STREET)
   - 42000401 PORTLAND CEMENT CONCRETE PAVEMENT (JOINTED), 9"
   - 30300112 AGGREGATE SUBGRADE IMPROVEMENT, 12"
   - 21001000 GEOTECHNICAL FABRIC FOR GROUND STABILIZATION

RDY-06

Michael Baker INTERNATIONAL
200 W Adams Street
Suite 1800
Chicago, IL 60606
P:+1 312.707.8770
FAX: 312.707.8804

| | | | |
|---|---|---|---|
| USER NAME = DLamb | DESIGNED - SAS | REVISED - | |
| | DRAWN - DCL | REVISED - | |
| PLOT SCALE = 40.0000 ' / in. | CHECKED - RBB | REVISED - | |
| PLOT DATE = 6/6/2023 | DATE - 6/08/2023 | REVISED - | |

**STATE OF ILLINOIS**
**DEPARTMENT OF TRANSPORTATION**

**CEDAR ST. (IL-8/IL-116) OVER TZPR & IL-29**
**PROPOSED ROADWAY PLAN – RAMP A**

SCALE: 1"=20' | SHEET 6 OF 22 SHEETS | STA. 193+00.00 TO STA. 195+39.79

| F.A.P. RTE. | SECTION | COUNTY | TOTAL SHEETS | SHEET NO. |
|---|---|---|---|---|
| VAR. | 13 (HVB, HB-3) BR-1:R | TAZEWELL | 1173 | 87 |
| | | CONTRACT NO. 68C55 | | |
| | ILLINOIS | FED. AID PROJECT | | |

MODEL: Default
FILE NAME: pw:\\mis-us-pw.bentley.com:mis-us-pw-03\Documents\Chicago IL\01 Projects\179740 IDOT Cedar\SIFx Phl\5.0 CADD\CAD Sheets\D468C55-sht-R-RampA 02.dgn

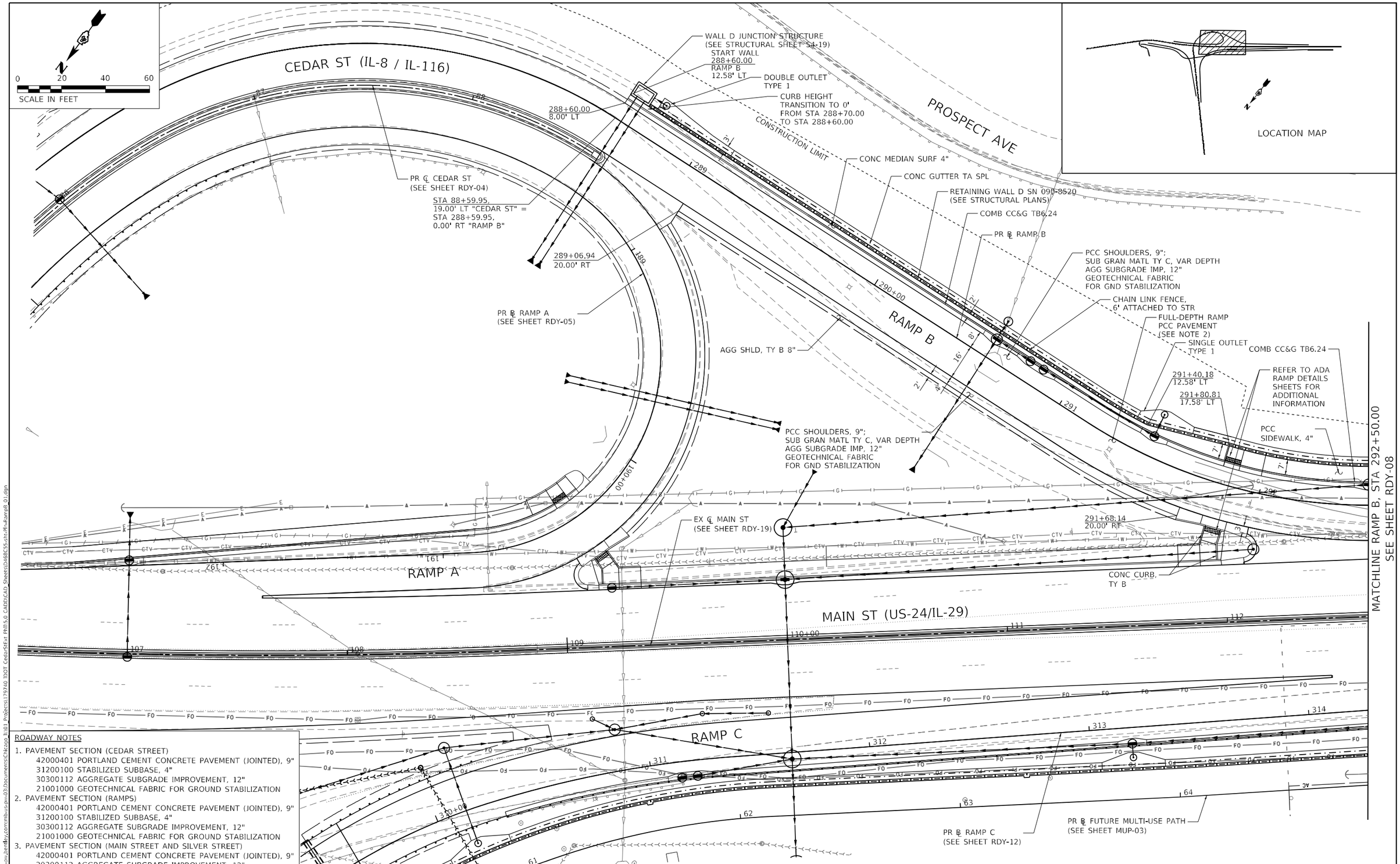


ROADWAY NOTES

1. PAVEMENT SECTION (CEDAR STREET)
   - 42000401 PORTLAND CEMENT CONCRETE PAVEMENT (JOINTED), 9"
   - 31200100 STABILIZED SUBBASE, 4"
   - 30300112 AGGREGATE SUBGRADE IMPROVEMENT, 12"
   - 21001000 GEOTECHNICAL FABRIC FOR GROUND STABILIZATION
2. PAVEMENT SECTION (RAMPS)
   - 42000401 PORTLAND CEMENT CONCRETE PAVEMENT (JOINTED), 9"
   - 31200100 STABILIZED SUBBASE, 4"
   - 30300112 AGGREGATE SUBGRADE IMPROVEMENT, 12"
   - 21001000 GEOTECHNICAL FABRIC FOR GROUND STABILIZATION
3. PAVEMENT SECTION (MAIN STREET AND SILVER STREET)
   - 42000401 PORTLAND CEMENT CONCRETE PAVEMENT (JOINTED), 9"
   - 30300112 AGGREGATE SUBGRADE IMPROVEMENT, 12"
   - 21001000 GEOTECHNICAL FABRIC FOR GROUND STABILIZATION

RDY-07

MODEL: Default
FILE NAME: pw:\\mis-is-pw.bentley.com:mb-is-pw-03\Documents\Chicago_IL\01 Projects\179740 IDOT Cedar-SIEx1 PH15.0 CADD\CAD Sheets\D-68C55-sht-pl-Ramp01-01.dgn

Michael Baker INTERNATIONAL
200 W Adams Street
Suite 1800
Chicago, IL 60606
PH: 312.707.8772
FAX: 312.707.8804

| | | | |
|---|---|---|---|
| USER NAME = DLamb | DESIGNED - SAS | REVISED - | |
| | DRAWN - DCL | REVISED - | |
| PLOT SCALE = 40.0000 ' / in. | CHECKED - RBB | REVISED - | |
| PLOT DATE = 6/6/2023 | DATE - 6/08/2023 | REVISED - | |

**STATE OF ILLINOIS**
**DEPARTMENT OF TRANSPORTATION**

**CEDAR ST. (IL-8/IL-116) OVER TZPR & IL-29**
**PROPOSED ROADWAY PLAN – RAMP B**

SCALE: 1"=20' | SHEET 7 OF 22 SHEETS | STA. 288+59.95 TO STA. 292+50.00

| F.A.P. RTE. | SECTION | COUNTY | TOTAL SHEETS | SHEET NO. |
|---|---|---|---|---|
| VAR. | 13 (HVB, HB-3) BR-1;R | TAZEWELL | 1173 | 88 |
| | | CONTRACT NO. 68C55 | | |
| | ILLINOIS | FED. AID PROJECT | | |

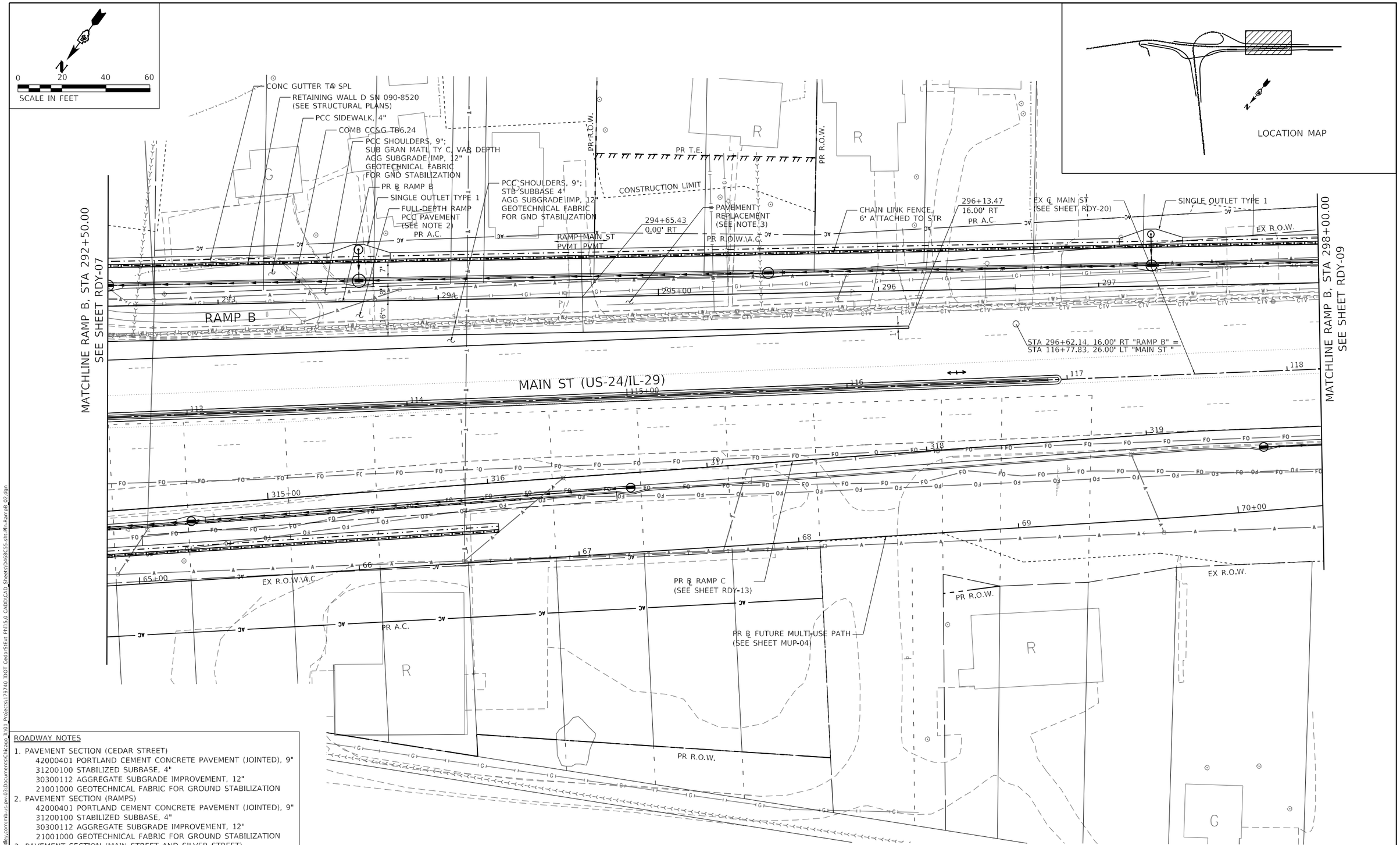


ROADWAY NOTES

1. PAVEMENT SECTION (CEDAR STREET)
   - 42000401 PORTLAND CEMENT CONCRETE PAVEMENT (JOINTED), 9"
   - 31200100 STABILIZED SUBBASE, 4"
   - 30300112 AGGREGATE SUBGRADE IMPROVEMENT, 12"
   - 21001000 GEOTECHNICAL FABRIC FOR GROUND STABILIZATION
2. PAVEMENT SECTION (RAMPS)
   - 42000401 PORTLAND CEMENT CONCRETE PAVEMENT (JOINTED), 9"
   - 31200100 STABILIZED SUBBASE, 4"
   - 30300112 AGGREGATE SUBGRADE IMPROVEMENT, 12"
   - 21001000 GEOTECHNICAL FABRIC FOR GROUND STABILIZATION
3. PAVEMENT SECTION (MAIN STREET AND SILVER STREET)
   - 42000401 PORTLAND CEMENT CONCRETE PAVEMENT (JOINTED), 9"
   - 30300112 AGGREGATE SUBGRADE IMPROVEMENT, 12"
   - 21001000 GEOTECHNICAL FABRIC FOR GROUND STABILIZATION

RDY-08

MODEL: Default
FILE NAME: pw:\\mbi-ucs-pw.bentley.commbi-ucs-pw-03\Documents\Chicago_IL\01 Projects\179740 IDOT Ceda/SHx1 PRH5.0 CADD\CAD Sheets\D468C55-sht-PR-RampB_02.dgn

Michael Baker INTERNATIONAL
200 W Adams Street
Suite 1800
Chicago, IL 60606
P:+ 312.707.8770
FAX: 312.707.8804

| | | | |
|---|---|---|---|
| USER NAME = DLamb | DESIGNED - SAS | REVISED - | |
| | DRAWN - DCL | REVISED - | |
| PLOT SCALE = 40.0000 ' / in. | CHECKED - RBB | REVISED - | |
| PLOT DATE = 6/6/2023 | DATE - 6/08/2023 | REVISED - | |

**STATE OF ILLINOIS**
**DEPARTMENT OF TRANSPORTATION**

**CEDAR ST. (IL-8/IL-116) OVER TZPR & IL-29**
**PROPOSED ROADWAY PLAN – RAMP B**

SCALE: 1"=20' | SHEET 8 OF 22 SHEETS | STA. 292+50.00 TO STA. 298+00.00

| F.A.P. RTE. | SECTION | COUNTY | TOTAL SHEETS | SHEET NO. |
|---|---|---|---|---|
| VAR. | 13 (HVB, HB-3) BR-1;R | TAZEWELL | 1173 | 89 |

CONTRACT NO. 68C55

ILLINOIS | FED. AID PROJECT

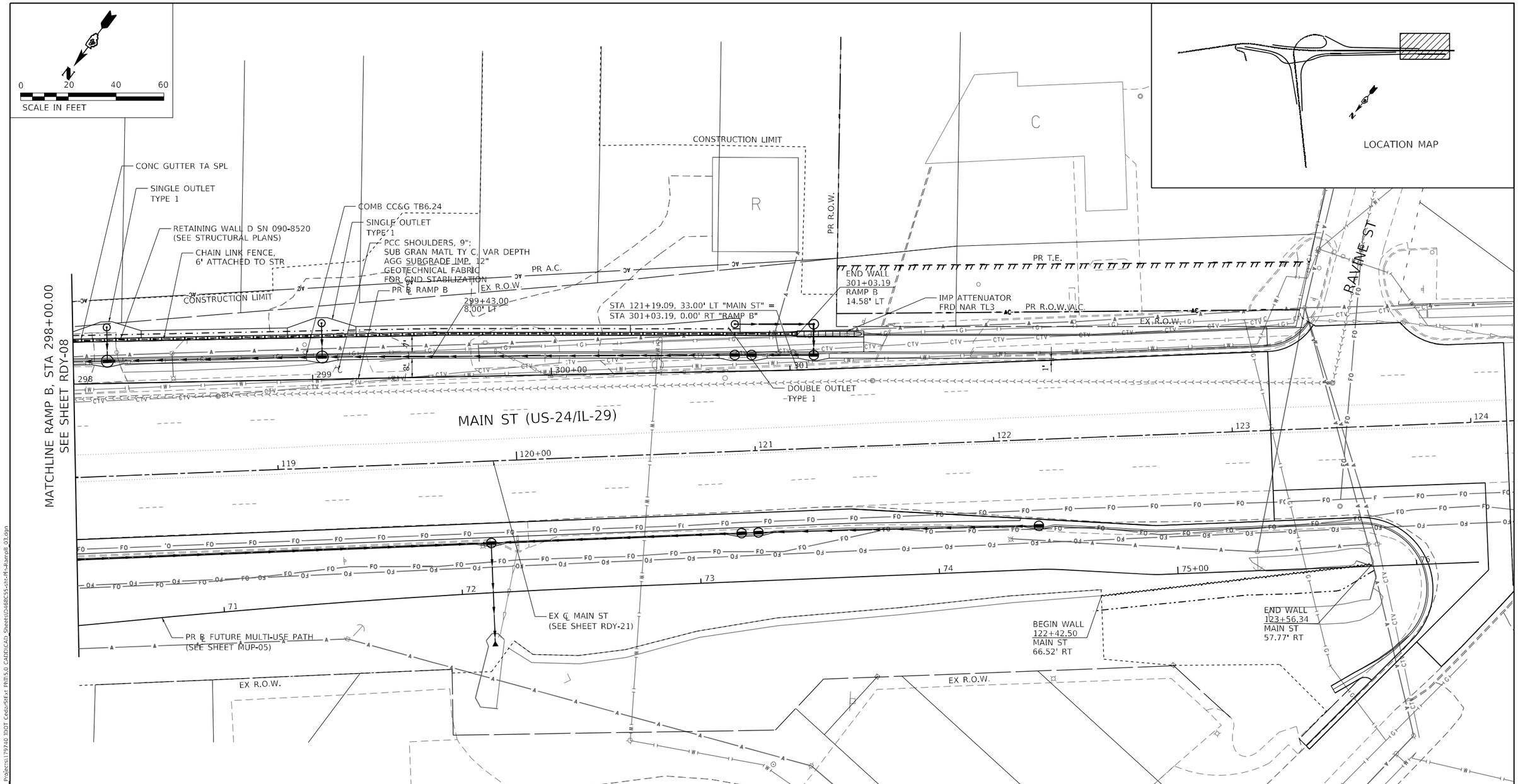


ROADWAY NOTES

1. PAVEMENT SECTION (CEDAR STREET)
   - 42000401 PORTLAND CEMENT CONCRETE PAVEMENT (JOINTED), 9"
   - 31200100 STABILIZED SUBBASE, 4"
   - 30300112 AGGREGATE SUBGRADE IMPROVEMENT, 12"
   - 21001000 GEOTECHNICAL FABRIC FOR GROUND STABILIZATION
2. PAVEMENT SECTION (RAMPS)
   - 42000401 PORTLAND CEMENT CONCRETE PAVEMENT (JOINTED), 9"
   - 31200100 STABILIZED SUBBASE, 4"
   - 30300112 AGGREGATE SUBGRADE IMPROVEMENT, 12"
   - 21001000 GEOTECHNICAL FABRIC FOR GROUND STABILIZATION
3. PAVEMENT SECTION (MAIN STREET AND SILVER STREET)
   - 42000401 PORTLAND CEMENT CONCRETE PAVEMENT (JOINTED), 9"
   - 30300112 AGGREGATE SUBGRADE IMPROVEMENT, 12"
   - 21001000 GEOTECHNICAL FABRIC FOR GROUND STABILIZATION

RDY-09

MODEL: Default
FILE NAME: pw:\\mbi-us-pw.bentley.com:bi-us-pw-03\Documents\Chicago IL\01 Projects\179740 IDOT Cedar\Sheets\0468C55-sht-H-RampB 03.dgn

Michael Baker INTERNATIONAL
200 W Adams Street
Suite 1800
Chicago, IL 60606
PH: 312.707.8772
FAX: 312.707.8804

| | | | |
|---|---|---|---|
| USER NAME = DLamb | DESIGNED - SAS | REVISED - | |
| | DRAWN - DCL | REVISED - | |
| PLOT SCALE = 40.0000 ' / in. | CHECKED - RBB | REVISED - | |
| PLOT DATE = 8/6/2023 | DATE - 6/08/2023 | REVISED - | |

**STATE OF ILLINOIS**
**DEPARTMENT OF TRANSPORTATION**

**CEDAR ST. (IL-8/IL-116) OVER TZPR & IL-29**
**PROPOSED ROADWAY PLAN – RAMP B**

SCALE: 1"=20' | SHEET 9 OF 22 SHEETS | STA. 298+00.00 TO STA. 301+03.19

| F.A.P. RTE. | SECTION | COUNTY | TOTAL SHEETS | SHEET NO. |
|---|---|---|---|---|
| VAR. | 13 (HVB, HB-3) BR-1;R | TAZEWELL | 1173 | 90 |
| | | CONTRACT NO. 68C55 | | |
| | ILLINOIS | FED. AID PROJECT | | |

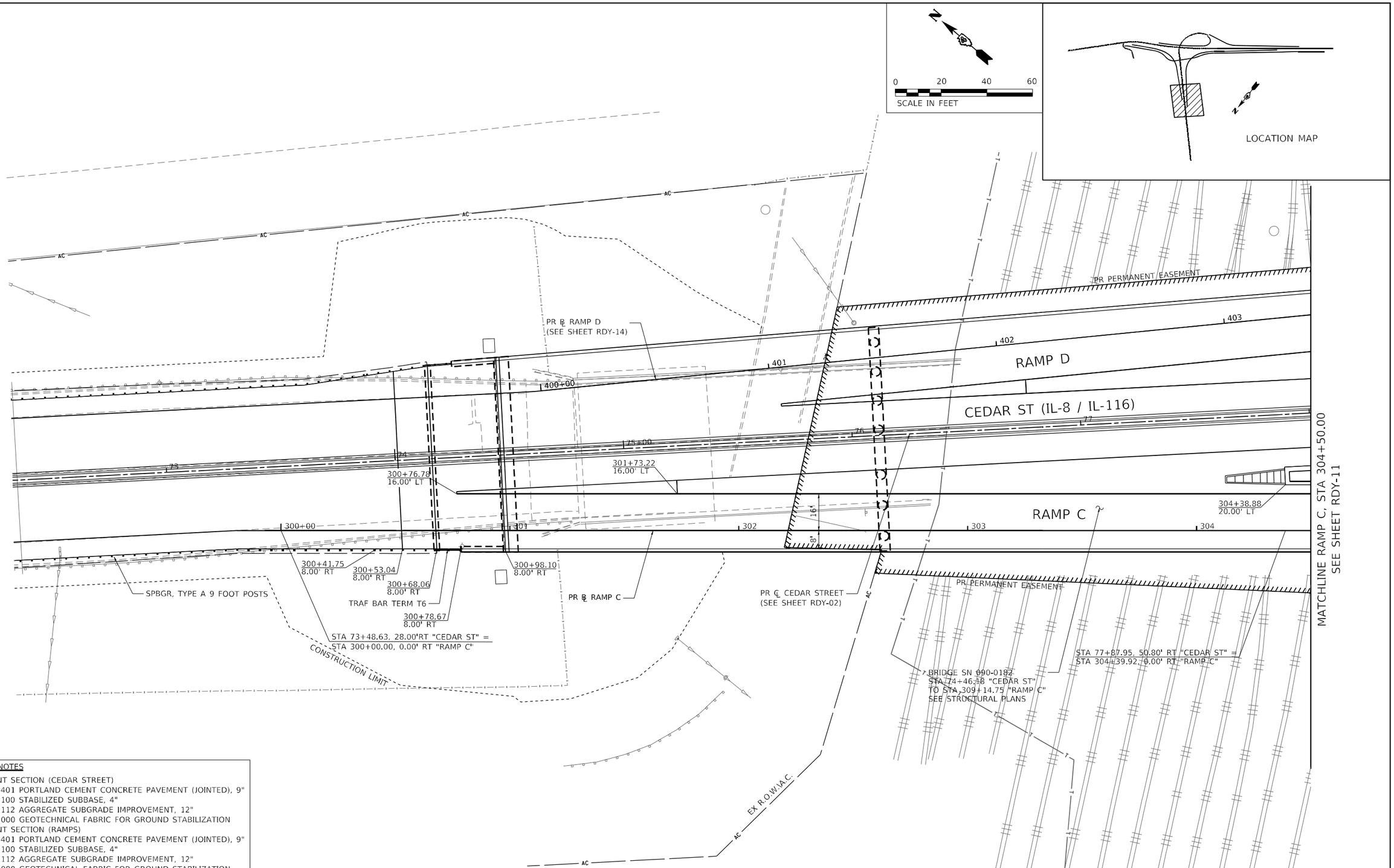


ROADWAY NOTES

1. PAVEMENT SECTION (CEDAR STREET)
   - 42000401 PORTLAND CEMENT CONCRETE PAVEMENT (JOINTED), 9"
   - 31200100 STABILIZED SUBBASE, 4"
   - 30300112 AGGREGATE SUBGRADE IMPROVEMENT, 12"
   - 21001000 GEOTECHNICAL FABRIC FOR GROUND STABILIZATION
2. PAVEMENT SECTION (RAMPS)
   - 42000401 PORTLAND CEMENT CONCRETE PAVEMENT (JOINTED), 9"
   - 31200100 STABILIZED SUBBASE, 4"
   - 30300112 AGGREGATE SUBGRADE IMPROVEMENT, 12"
   - 21001000 GEOTECHNICAL FABRIC FOR GROUND STABILIZATION
3. PAVEMENT SECTION (MAIN STREET AND SILVER STREET)
   - 42000401 PORTLAND CEMENT CONCRETE PAVEMENT (JOINTED), 9"
   - 30300112 AGGREGATE SUBGRADE IMPROVEMENT, 12"
   - 21001000 GEOTECHNICAL FABRIC FOR GROUND STABILIZATION



Michael Baker INTERNATIONAL
200 W Adams Street
Suite 1800
Chicago, IL 60606
P:+1 312.707.8770
FAX: 312.707.8804

| | | | |
|---|---|---|---|
| USER NAME = DLamb | DESIGNED - SAS | REVISED - | |
| | DRAWN - DCL | REVISED - | |
| PLOT SCALE = 40.0000 ' / in. | CHECKED - RBB | REVISED - | |
| PLOT DATE = 6/6/2023 | DATE - 6/08/2023 | REVISED - | |

**STATE OF ILLINOIS**
**DEPARTMENT OF TRANSPORTATION**

**CEDAR ST. (IL-8/IL-116) OVER TZPR & IL-29**
**PROPOSED ROADWAY PLAN – RAMP C**

SCALE: 1"=20' | SHEET 10 OF 22 SHEETS | STA. 300+00.00 TO STA. 304+50.00

| F.A.P. RTE. | SECTION | COUNTY | TOTAL SHEETS | SHEET NO. |
|---|---|---|---|---|
| VAR. | 13 (HVB, HB-3) 8R-1:R | TAZEWELL | 1173 | 91 |
| | | CONTRACT NO. 68C55 | | |
| | ILLINOIS | FED. AID PROJECT | | |

MODEL: Default
FILE NAME: pw:\\mb-us-pw.bentley.com:mb-us-pw-03\Documents\Chicago IL\01 Projects\179740 IDOT Cedar\SE+ PhII\5.0 CADD\CAD Sheets\D468C55-Ill-IR-RampC_01.dgn

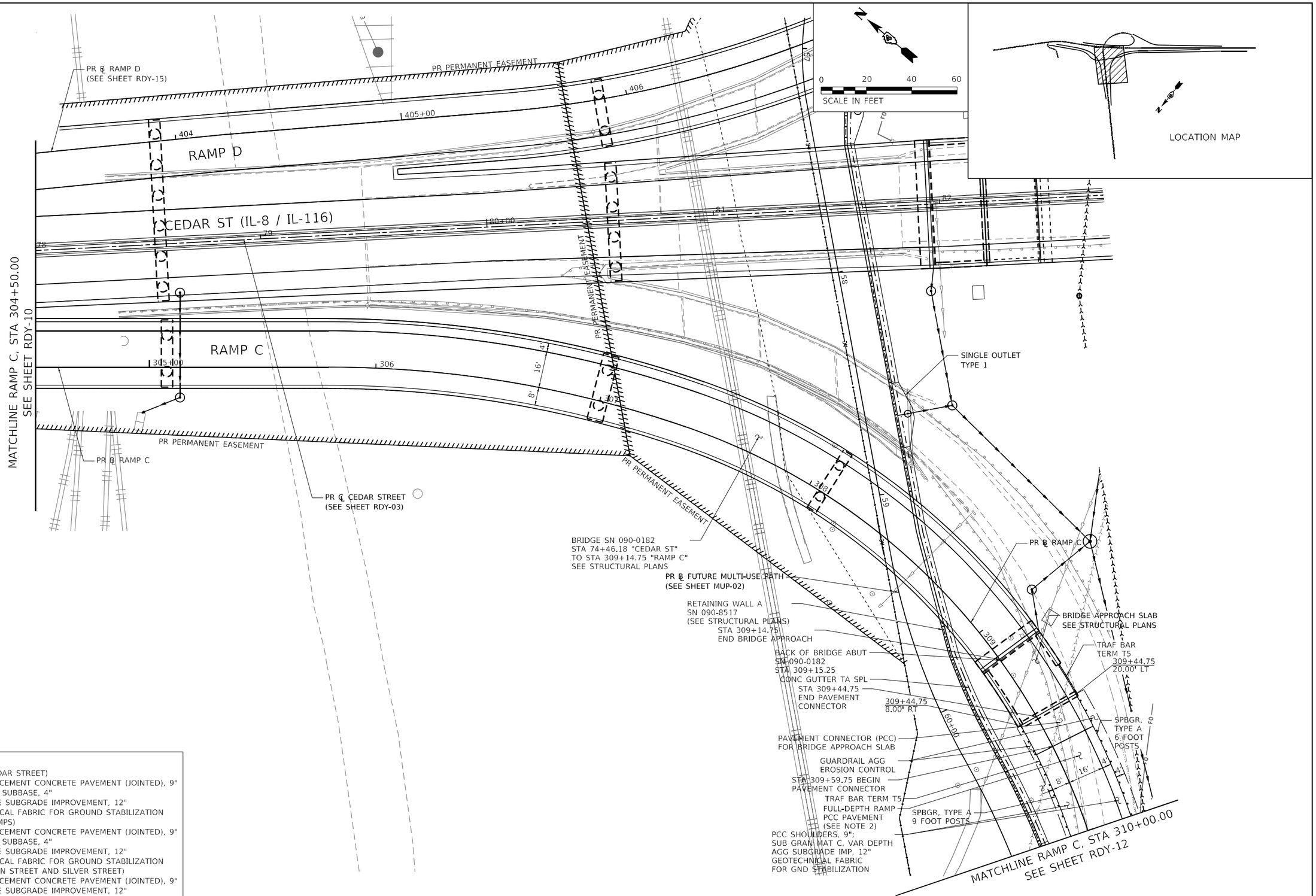


ROADWAY NOTES

1. PAVEMENT SECTION (CEDAR STREET)
   - 42000401 PORTLAND CEMENT CONCRETE PAVEMENT (JOINTED), 9"
   - 31200100 STABILIZED SUBBASE, 4"
   - 30300112 AGGREGATE SUBGRADE IMPROVEMENT, 12"
   - 21001000 GEOTECHNICAL FABRIC FOR GROUND STABILIZATION
2. PAVEMENT SECTION (RAMPS)
   - 42000401 PORTLAND CEMENT CONCRETE PAVEMENT (JOINTED), 9"
   - 31200100 STABILIZED SUBBASE, 4"
   - 30300112 AGGREGATE SUBGRADE IMPROVEMENT, 12"
   - 21001000 GEOTECHNICAL FABRIC FOR GROUND STABILIZATION
3. PAVEMENT SECTION (MAIN STREET AND SILVER STREET)
   - 42000401 PORTLAND CEMENT CONCRETE PAVEMENT (JOINTED), 9"
   - 30300112 AGGREGATE SUBGRADE IMPROVEMENT, 12"
   - 21001000 GEOTECHNICAL FABRIC FOR GROUND STABILIZATION

RDY-11

MODEL: Default
FILE NAME: pw:\\mo-us-pw.bentley.com:mb-us-pw-03\Documents\Chicago\11101 Projects\179740 IDOT Cedar\Site1 Phase\5.0 CADD\CAD Sheets\68C55-sht-pln-Ramp C 02.dgn

Michael Baker INTERNATIONAL
200 W Adams Street
Suite 1800
Chicago, IL 60606
PH: 312.707.8770
FAX: 312.707.8804

| | | | |
|---|---|---|---|
| USER NAME = DLamb | DESIGNED - SAS | REVISED - | |
| | DRAWN - DCL | REVISED - | |
| PLOT SCALE = 40.0000 ' / in. | CHECKED - RBB | REVISED - | |
| PLOT DATE = 6/6/2023 | DATE - 6/08/2023 | REVISED - | |

**STATE OF ILLINOIS**
**DEPARTMENT OF TRANSPORTATION**

**CEDAR ST. (IL-8/IL-116) OVER TZPR & IL-29**
**PROPOSED ROADWAY PLAN – RAMP C**

SCALE: 1"=20' | SHEET 11 OF 22 SHEETS | STA. 304+50.00 TO STA. 310+00.00

| F.A.P. RTE. | SECTION | COUNTY | TOTAL SHEETS | SHEET NO. |
|---|---|---|---|---|
| VAR. | 13 (HVB, HB-3) BR-1;R | TAZEWELL | 1173 | 92 |
| | | CONTRACT NO. 68C55 | | |
| | ILLINOIS | FED. AID PROJECT | | |

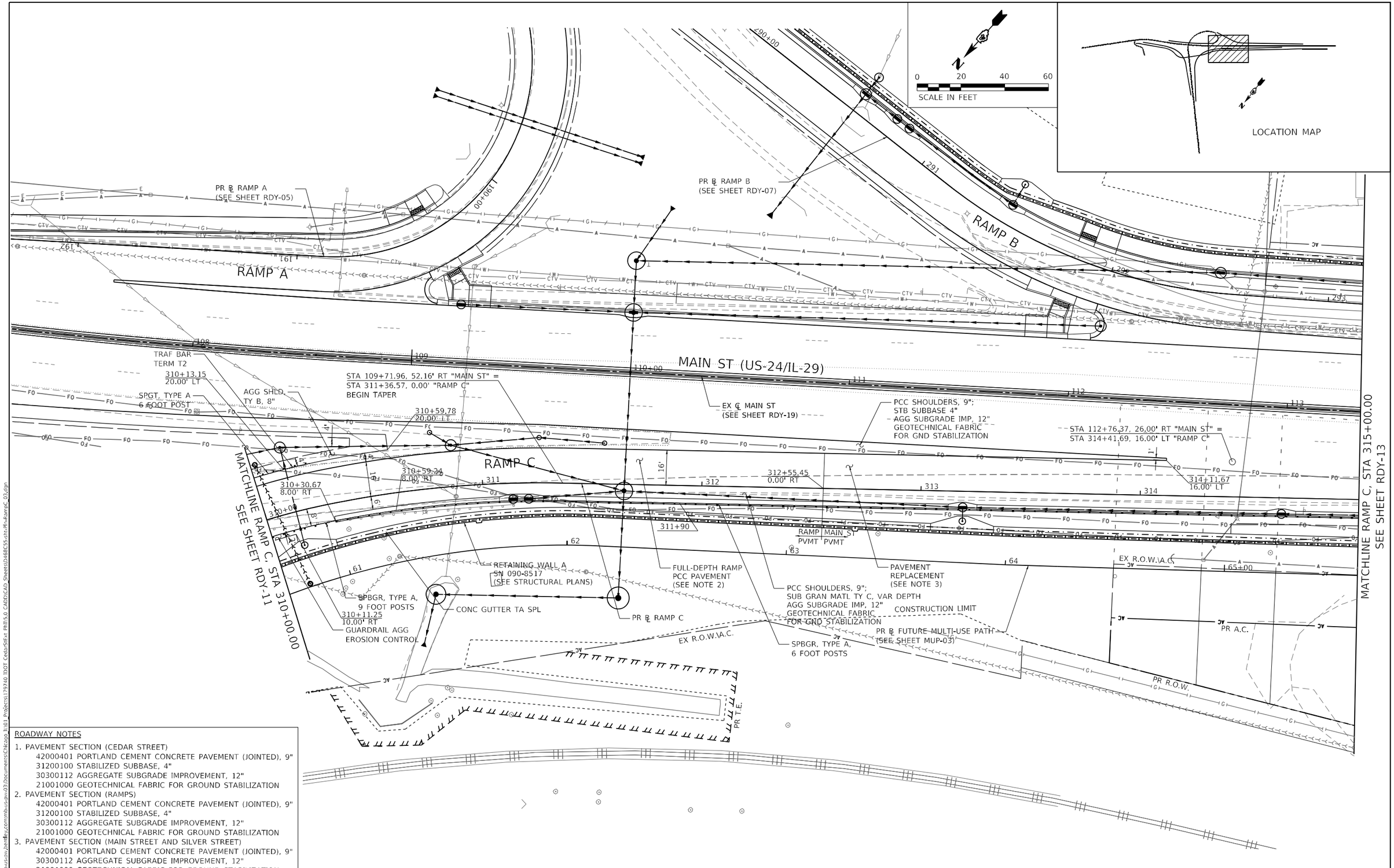


ROADWAY NOTES

1. PAVEMENT SECTION (CEDAR STREET)
   - 42000401 PORTLAND CEMENT CONCRETE PAVEMENT (JOINTED), 9"
   - 31200100 STABILIZED SUBBASE, 4"
   - 30300112 AGGREGATE SUBGRADE IMPROVEMENT, 12"
   - 21001000 GEOTECHNICAL FABRIC FOR GROUND STABILIZATION
2. PAVEMENT SECTION (RAMPS)
   - 42000401 PORTLAND CEMENT CONCRETE PAVEMENT (JOINTED), 9"
   - 31200100 STABILIZED SUBBASE, 4"
   - 30300112 AGGREGATE SUBGRADE IMPROVEMENT, 12"
   - 21001000 GEOTECHNICAL FABRIC FOR GROUND STABILIZATION
3. PAVEMENT SECTION (MAIN STREET AND SILVER STREET)
   - 42000401 PORTLAND CEMENT CONCRETE PAVEMENT (JOINTED), 9"
   - 30300112 AGGREGATE SUBGRADE IMPROVEMENT, 12"
   - 21001000 GEOTECHNICAL FABRIC FOR GROUND STABILIZATION

RDY-12

MODEL: Default
FILE NAME: pw:\\mb-us-pw.bentley.com:mb-us-pw-03\Documents\Chicago IL\01 Projects\179740 IDOT Cedar\Sitex Phil\5.0 CADD\CAD Sheets\0488C55-site-Ph-Ramp-C-03.dgn

Michael Baker INTERNATIONAL
200 W Adams Street
Suite 1800
Chicago, IL 60606
P: 312.707.8770
FAX: 312.707.8804

| | | | |
|---|---|---|---|
| USER NAME = DLamb | DESIGNED - SAS | REVISED - | |
| | DRAWN - DCL | REVISED - | |
| PLOT SCALE = 40.0000 ' / in. | CHECKED - RBB | REVISED - | |
| PLOT DATE = 6/6/2023 | DATE - 6/08/2023 | REVISED - | |

**STATE OF ILLINOIS**
**DEPARTMENT OF TRANSPORTATION**

**CEDAR ST. (IL-84/L-116) OVER TZPR & IL-29**
**PROPOSED ROADWAY PLAN – RAMP C**

SCALE: 1"=20' | SHEET 12 OF 22 SHEETS | STA. 310+00.00 TO STA. 315+00.00

| F.A.P. RTE. | SECTION | COUNTY | TOTAL SHEETS | SHEET NO. |
|---|---|---|---|---|
| VAR. | 13 (HVB, HB-3) BR-1;R | TAZEWELL | 1173 | 93 |
| | | CONTRACT NO. 68C55 | | |
| | ILLINOIS | FED. AID PROJECT | | |

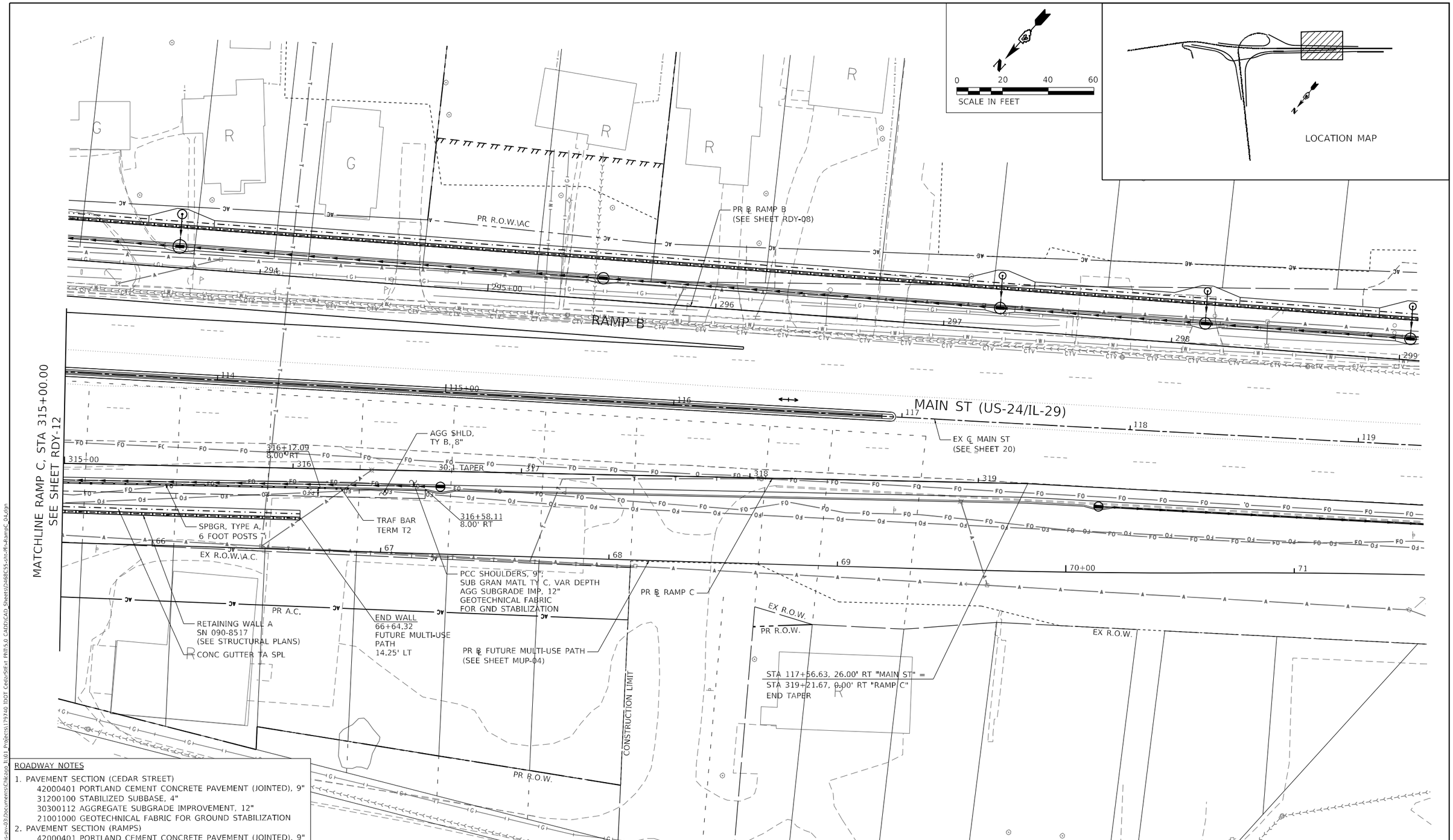


ROADWAY NOTES

1. PAVEMENT SECTION (CEDAR STREET)
   - 42000401 PORTLAND CEMENT CONCRETE PAVEMENT (JOINTED), 9"
   - 31200100 STABILIZED SUBBASE, 4"
   - 30300112 AGGREGATE SUBGRADE IMPROVEMENT, 12"
   - 21001000 GEOTECHNICAL FABRIC FOR GROUND STABILIZATION
2. PAVEMENT SECTION (RAMPS)
   - 42000401 PORTLAND CEMENT CONCRETE PAVEMENT (JOINTED), 9"
   - 31200100 STABILIZED SUBBASE, 4"
   - 30300112 AGGREGATE SUBGRADE IMPROVEMENT, 12"
   - 21001000 GEOTECHNICAL FABRIC FOR GROUND STABILIZATION
3. PAVEMENT SECTION (MAIN STREET AND SILVER STREET)
   - 42000401 PORTLAND CEMENT CONCRETE PAVEMENT (JOINTED), 9"
   - 30300112 AGGREGATE SUBGRADE IMPROVEMENT, 12"
   - 21001000 GEOTECHNICAL FABRIC FOR GROUND STABILIZATION

RDY-13

Michael Baker INTERNATIONAL
200 W Adams Street
Suite 1800
Chicago, IL 60606
PH: 312.707.8772
FAX: 312.707.8804

| | | |
|---|---|---|
| USER NAME = DLamb | DESIGNED - SAS | REVISED - |
| | DRAWN - DCL | REVISED - |
| PLOT SCALE = 40.0000 ' / in. | CHECKED - RBB | REVISED - |
| PLOT DATE = 8/6/2023 | DATE - 6/08/2023 | REVISED - |

**STATE OF ILLINOIS**
**DEPARTMENT OF TRANSPORTATION**

**CEDAR ST. (IL-8/IL-116) OVER TZPR & IL-29**
**PROPOSED ROADWAY PLAN – RAMP C**

SCALE: 1"=20' | SHEET 13 OF 22 SHEETS | STA. 315+00.00 TO STA. 319+21.67

| F.A.P. RTE. | SECTION | COUNTY | TOTAL SHEETS | SHEET NO. |
|---|---|---|---|---|
| VAR. | 13 (HVB, HB-3) BR-1;R | TAZEWELL | 1173 | 94 |
| | | CONTRACT NO. 68C55 | | |
| | ILLINOIS | FED. AID PROJECT | | |

MODEL: Default
FILE NAME: pw:\\mbi-us-pw.bentley.com:mbi-us-pw-03\Documents\Chicago_IL\01 Projects\179740 IDOT Cedar\Sheets\0468C55-sht-M-RampC_04.dgn

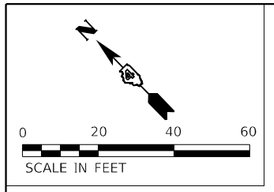


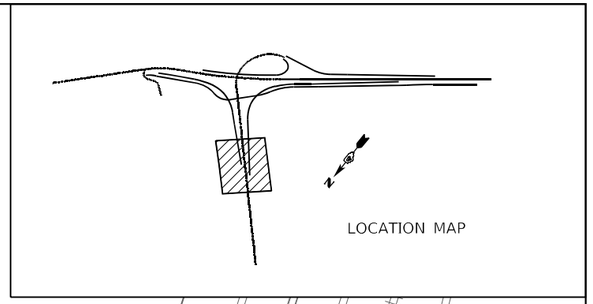


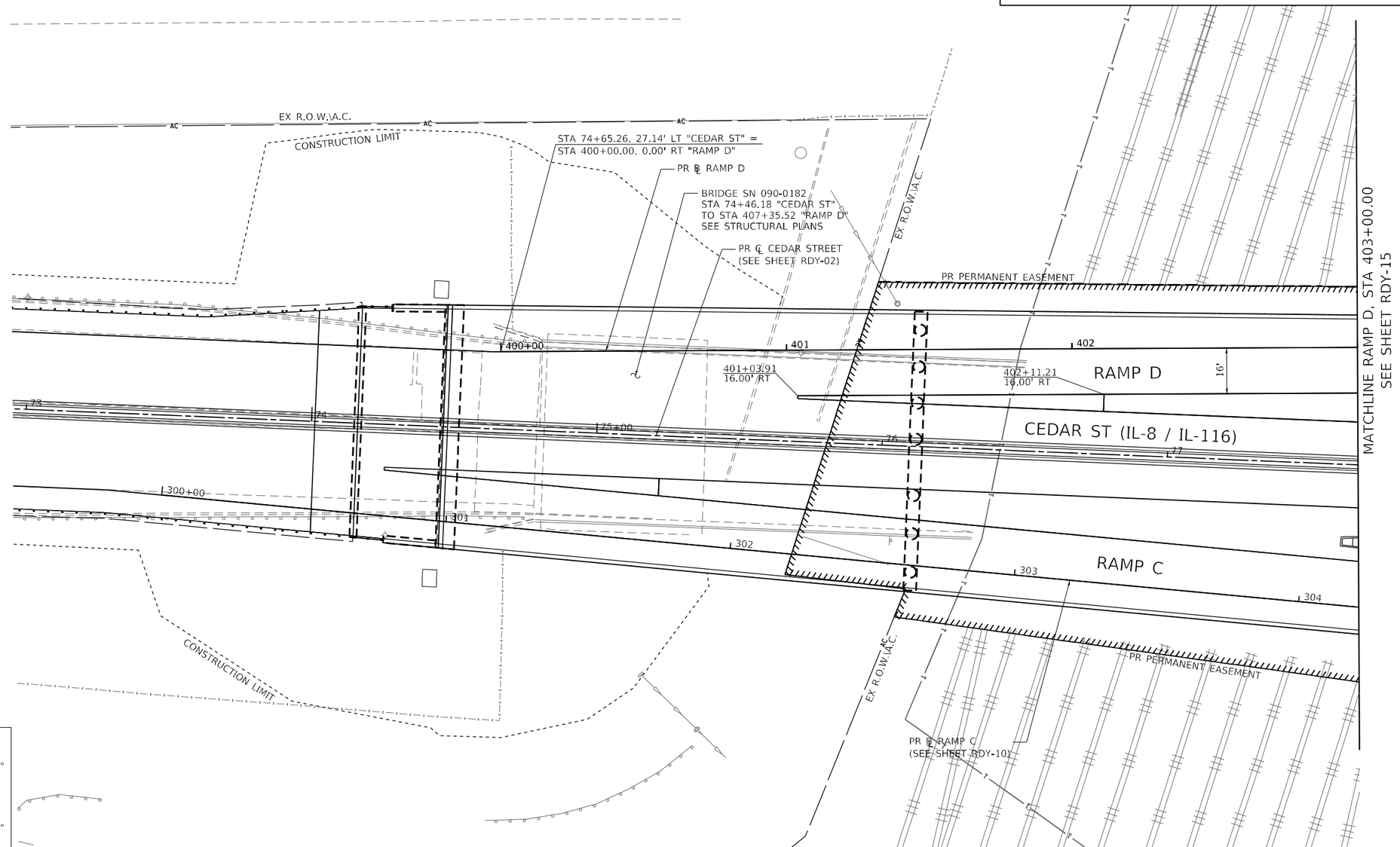


ROADWAY NOTES

1. PAVEMENT SECTION (CEDAR STREET)
   - 42000401 PORTLAND CEMENT CONCRETE PAVEMENT (JOINTED), 9"
   - 31200100 STABILIZED SUBBASE, 4"
   - 30300112 AGGREGATE SUBGRADE IMPROVEMENT, 12"
   - 21001000 GEOTECHNICAL FABRIC FOR GROUND STABILIZATION
2. PAVEMENT SECTION (RAMPS)
   - 42000401 PORTLAND CEMENT CONCRETE PAVEMENT (JOINTED), 9"
   - 31200100 STABILIZED SUBBASE, 4"
   - 30300112 AGGREGATE SUBGRADE IMPROVEMENT, 12"
   - 21001000 GEOTECHNICAL FABRIC FOR GROUND STABILIZATION
3. PAVEMENT SECTION (MAIN STREET AND SILVER STREET)
   - 42000401 PORTLAND CEMENT CONCRETE PAVEMENT (JOINTED), 9"
   - 30300112 AGGREGATE SUBGRADE IMPROVEMENT, 12"
   - 21001000 GEOTECHNICAL FABRIC FOR GROUND STABILIZATION

RDY-14

MODEL: Default
FILE NAME: pw:\\mb-us-pw.bentley.com:mb-us-pw-03\Documents\Chicago IL\01 Projects\179740 IDOT Cedar\Site1 Phll\5.0 CADD\CAD Sheets\0468C55-sht-Pl-RampD 01.dgn


Michael Baker INTERNATIONAL
200 W Adams Street
Suite 1800
Chicago, IL 60606
PH: 312.707.8770
FAX: 312.707.8804


| | | | |
|---|---|---|---|
| USER NAME = DLamb | DESIGNED - SAS | REVISED - | |
| | DRAWN - DCL | REVISED - | |
| PLOT SCALE = 40.0000 ' / in. | CHECKED - RBB | REVISED - | |
| PLOT DATE = 6/6/2023 | DATE - 6/08/2023 | REVISED - | |

**STATE OF ILLINOIS**
**DEPARTMENT OF TRANSPORTATION**

**CEDAR ST. (IL-8/IL-116) OVER TZPR & IL-29**
**PROPOSED ROADWAY PLAN – RAMP D**

SCALE: 1"=20' | SHEET 14 OF 22 SHEETS | STA. 400+00.00 TO STA. 403+00.00

| F.A.P. RTE. | SECTION | COUNTY | TOTAL SHEETS | SHEET NO. |
|---|---|---|---|---|
| VAR. | 13 (HVB, HB-3) BR-1;R | TAZEWELL | 1173 | 95 |
| | | CONTRACT NO. 68C55 | | |
| | ILLINOIS | FED. AID PROJECT | | |

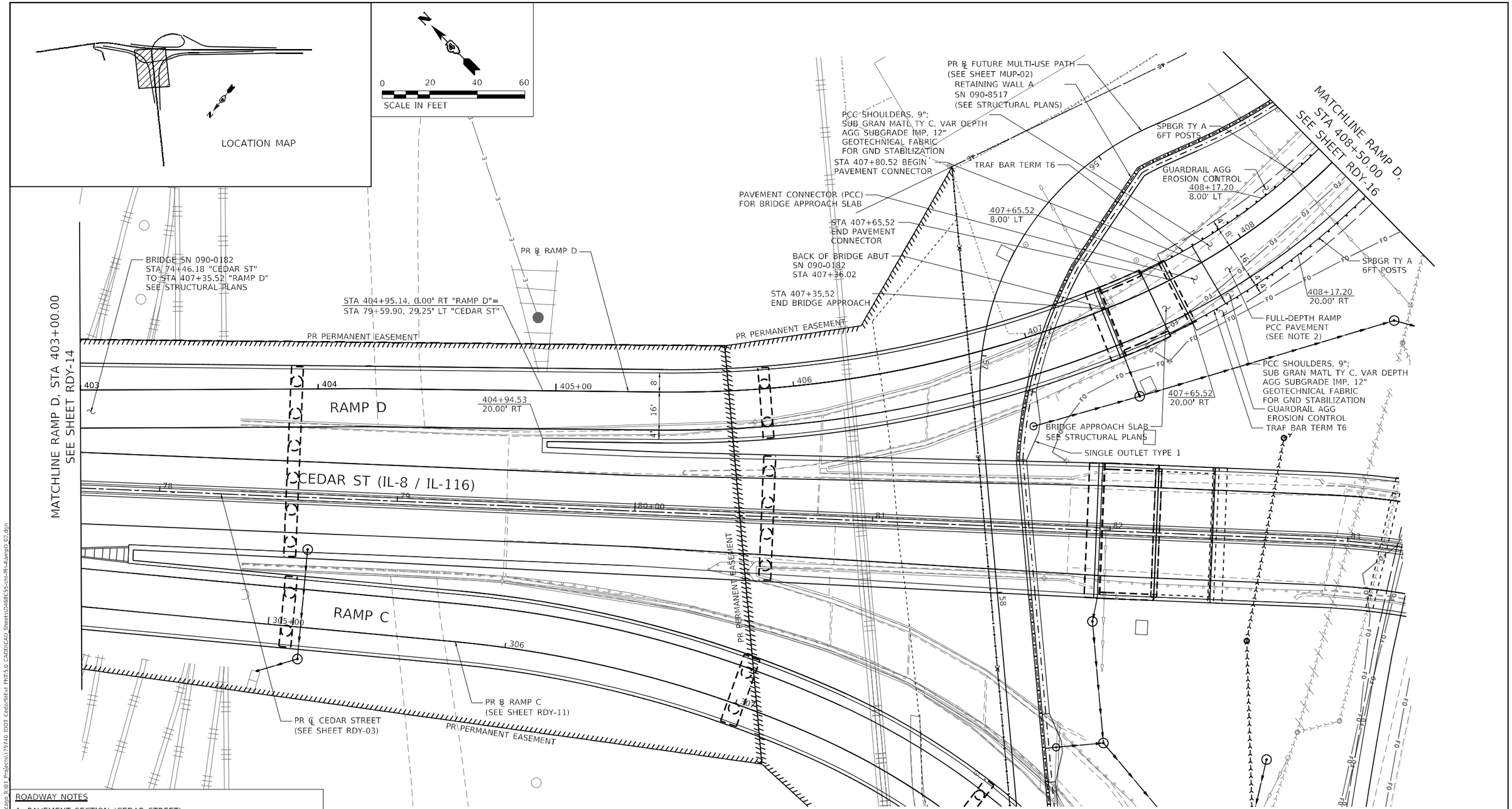


ROADWAY NOTES

1. PAVEMENT SECTION (CEDAR STREET)
   - 42000401 PORTLAND CEMENT CONCRETE PAVEMENT (JOINTED), 9"
   - 31200100 STABILIZED SUBBASE, 4"
   - 30300112 AGGREGATE SUBGRADE IMPROVEMENT, 12"
   - 21001000 GEOTECHNICAL FABRIC FOR GROUND STABILIZATION
2. PAVEMENT SECTION (RAMPS)
   - 42000401 PORTLAND CEMENT CONCRETE PAVEMENT (JOINTED), 9"
   - 31200100 STABILIZED SUBBASE, 4"
   - 30300112 AGGREGATE SUBGRADE IMPROVEMENT, 12"
   - 21001000 GEOTECHNICAL FABRIC FOR GROUND STABILIZATION
3. PAVEMENT SECTION (MAIN STREET AND SILVER STREET)
   - 42000401 PORTLAND CEMENT CONCRETE PAVEMENT (JOINTED), 9"
   - 30300112 AGGREGATE SUBGRADE IMPROVEMENT, 12"
   - 21001000 GEOTECHNICAL FABRIC FOR GROUND STABILIZATION

RDY-15

MODEL: Default
FILE NAME: pw:\\mbakerintl.bentley.com:mbi-sqlpw-03\Documents\Chicago IL\01 Projects\179740 IDOT Cedar\Sfxt Phlh5.0 CADD\CAD Sheets\D468C55-sht-Pl-RampD-02.dgn

Michael Baker INTERNATIONAL
200 W Adams Street
Suite 1800
Chicago, IL 60606
P: 312.707.8770
FAX: 312.707.8804

| | | | |
|---|---|---|---|
| USER NAME = DLamb | DESIGNED - SAS | REVISED - | |
| | DRAWN - DCL | REVISED - | |
| PLOT SCALE = 40.0000 ' / in. | CHECKED - RBB | REVISED - | |
| PLOT DATE = 6/6/2023 | DATE - 6/08/2023 | REVISED - | |

**STATE OF ILLINOIS**
**DEPARTMENT OF TRANSPORTATION**

**CEDAR ST. (IL-8/IL-116) OVER TZPR & IL-29**
**PROPOSED ROADWAY PLAN – RAMP D**

SCALE: 1"=20' | SHEET 15 OF 22 SHEETS | STA. 403+00.00 TO STA. 408+50.00

| F.A.P. RTE. | SECTION | COUNTY | TOTAL SHEETS | SHEET NO. |
|---|---|---|---|---|
| VAR. | 13 (HVB, HB-3) BR-1;R | TAZEWELL | 1173 | 96 |
| | | CONTRACT NO. 68C55 | | |
| | | ILLINOIS | FED. AID PROJECT | |

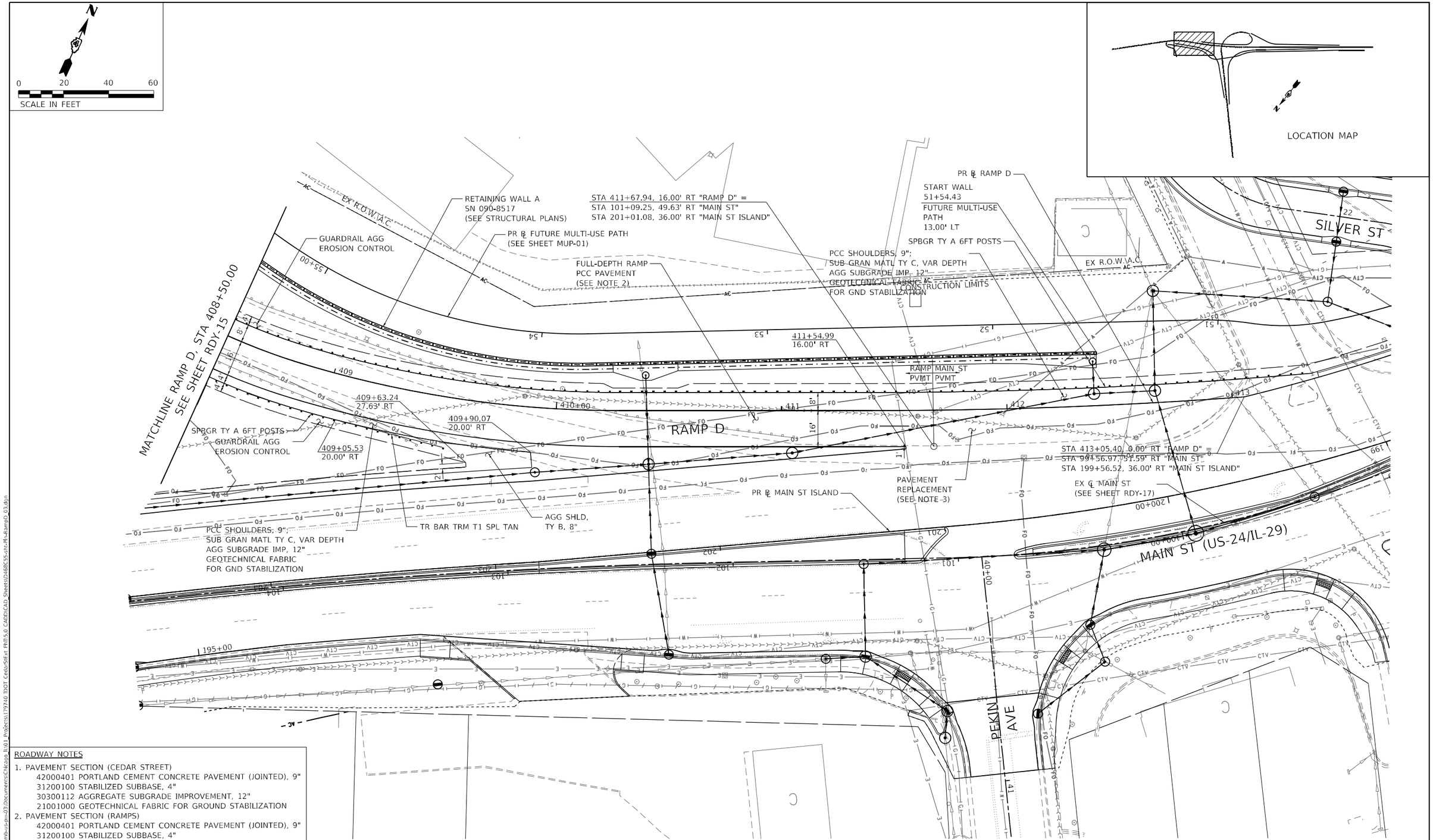


ROADWAY NOTES

1. PAVEMENT SECTION (CEDAR STREET)
   - 42000401 PORTLAND CEMENT CONCRETE PAVEMENT (JOINTED), 9"
   - 31200100 STABILIZED SUBBASE, 4"
   - 30300112 AGGREGATE SUBGRADE IMPROVEMENT, 12"
   - 21001000 GEOTECHNICAL FABRIC FOR GROUND STABILIZATION
2. PAVEMENT SECTION (RAMPS)
   - 42000401 PORTLAND CEMENT CONCRETE PAVEMENT (JOINTED), 9"
   - 31200100 STABILIZED SUBBASE, 4"
   - 30300112 AGGREGATE SUBGRADE IMPROVEMENT, 12"
   - 21001000 GEOTECHNICAL FABRIC FOR GROUND STABILIZATION
3. PAVEMENT SECTION (MAIN STREET AND SILVER STREET)
   - 42000401 PORTLAND CEMENT CONCRETE PAVEMENT (JOINTED), 9"
   - 30300112 AGGREGATE SUBGRADE IMPROVEMENT, 12"
   - 21001000 GEOTECHNICAL FABRIC FOR GROUND STABILIZATION

RDY-16

MODEL: Default
FILE NAME: pw:\\mbi-ussw.bentley.commbi-ussw-03:Documents\Chicago_IL\01 Projects\179740 IDOT Cedar\Sext Phl15.0 CADD\CAD Sheets\068C55-sht-Pl-RampD-03.dgn

Michael Baker INTERNATIONAL
200 W Adams Street
Suite 1800
Chicago, IL 60606
PH: 312.707.8700
FAX: 312.707.8804

| | | | |
|---|---|---|---|
| USER NAME = DLamb | DESIGNED - SAS | REVISED - | |
| | DRAWN - DCL | REVISED - | |
| PLOT SCALE = 40.0000 ' / in. | CHECKED - RBB | REVISED - | |
| PLOT DATE = 6/6/2023 | DATE - 6/08/2023 | REVISED - | |

**STATE OF ILLINOIS**
**DEPARTMENT OF TRANSPORTATION**

**CEDAR ST. (IL-8/IL-116) OVER TZPR & IL-29**
**PROPOSED ROADWAY PLAN – RAMP D**

SCALE: 1"=20' | SHEET 16 OF 22 SHEETS | STA. 408+50.00 TO STA. 413+67.29

| F.A.P. RTE. | SECTION | COUNTY | TOTAL SHEETS | SHEET NO. |
|---|---|---|---|---|
| VAR. | 13 (HVB, HB-3) BR-1;R | TAZEWELL | 1173 | 97 |
| | | CONTRACT NO. 68C55 | | |
| | | ILLINOIS | FED. AID PROJECT | |

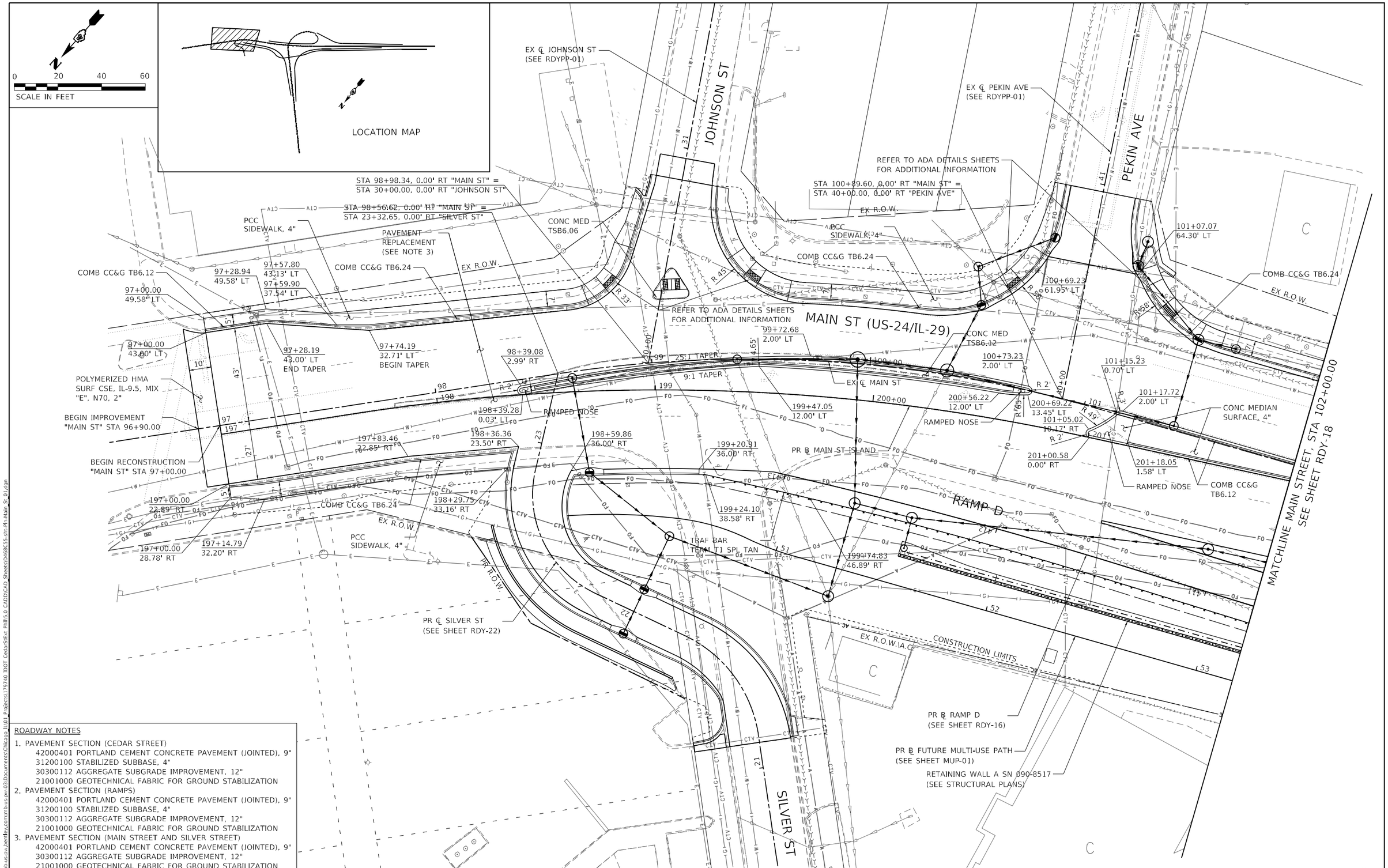


ROADWAY NOTES

1. PAVEMENT SECTION (CEDAR STREET)
   - 42000401 PORTLAND CEMENT CONCRETE PAVEMENT (JOINTED), 9"
   - 31200100 STABILIZED SUBBASE, 4"
   - 30300112 AGGREGATE SUBGRADE IMPROVEMENT, 12"
   - 21001000 GEOTECHNICAL FABRIC FOR GROUND STABILIZATION
2. PAVEMENT SECTION (RAMPS)
   - 42000401 PORTLAND CEMENT CONCRETE PAVEMENT (JOINTED), 9"
   - 31200100 STABILIZED SUBBASE, 4"
   - 30300112 AGGREGATE SUBGRADE IMPROVEMENT, 12"
   - 21001000 GEOTECHNICAL FABRIC FOR GROUND STABILIZATION
3. PAVEMENT SECTION (MAIN STREET AND SILVER STREET)
   - 42000401 PORTLAND CEMENT CONCRETE PAVEMENT (JOINTED), 9"
   - 30300112 AGGREGATE SUBGRADE IMPROVEMENT, 12"
   - 21001000 GEOTECHNICAL FABRIC FOR GROUND STABILIZATION

RDY-17

Michael Baker INTERNATIONAL
200 W Adams Street Suite 1800 Chicago, IL 60606 PH: 312.707.8775 FAX: 312.707.8804

| | | | |
|---|---|---|---|
| USER NAME = DLamb | DESIGNED - SAS | REVISED - | |
| | DRAWN - DCL | REVISED - | |
| PLOT SCALE = 40.0000 ' / in. | CHECKED - RBB | REVISED - | |
| PLOT DATE = 6/6/2023 | DATE - 6/08/2023 | REVISED - | |

**STATE OF ILLINOIS**
**DEPARTMENT OF TRANSPORTATION**

**CEDAR ST. (IL-8/IL-116) OVER TZPR & IL-29**
**PROPOSED ROADWAY PLAN – MAIN STREET**

SCALE: 1"=20' | SHEET 17 OF 22 SHEETS | STA. 96+90.00 TO STA. 102+00.00

| F.A.P. RTE. | SECTION | COUNTY | TOTAL SHEETS | SHEET NO. |
|---|---|---|---|---|
| VAR. | 13 (HVB, HB-3) BR-1;R | TAZEWELL | 1173 | 98 |
| | | CONTRACT NO. 68C55 | | |
| | ILLINOIS | FED. AID PROJECT | | |

MODEL: Default
FILE NAME: pw:\\mis-ipw.bentley.com:mb-ic-pw-03\Documents\Chicago_IL\01 Projects\179740 IDOT CedarSIEx1 PhII\5.0 CADD\CAD Sheets\D468C55-sht-pl-Main_S_01.dgn

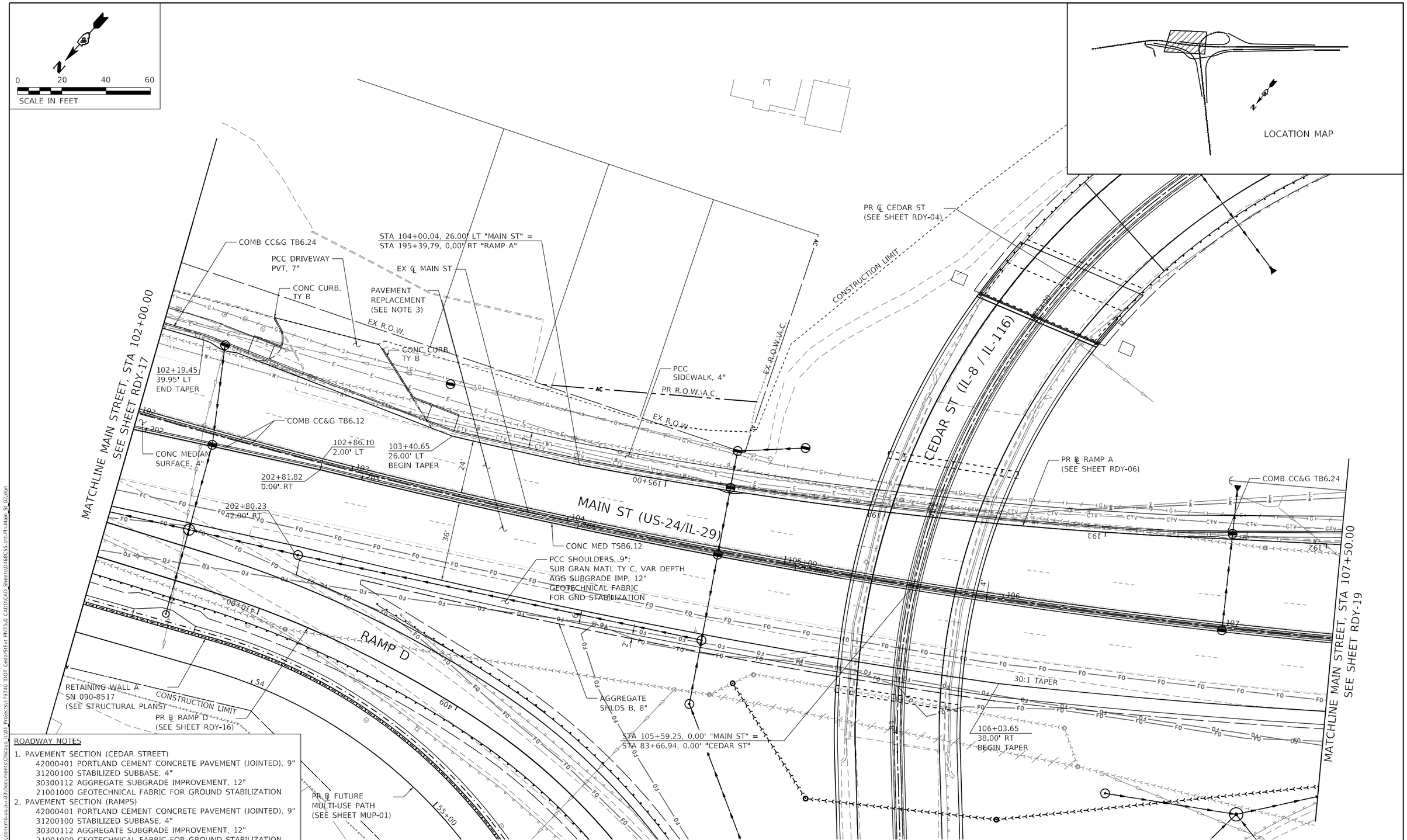


ROADWAY NOTES

1. PAVEMENT SECTION (CEDAR STREET)
   - 42000401 PORTLAND CEMENT CONCRETE PAVEMENT (JOINTED), 9"
   - 31200100 STABILIZED SUBBASE, 4"
   - 30300112 AGGREGATE SUBGRADE IMPROVEMENT, 12"
   - 21001000 GEOTECHNICAL FABRIC FOR GROUND STABILIZATION
2. PAVEMENT SECTION (RAMPS)
   - 42000401 PORTLAND CEMENT CONCRETE PAVEMENT (JOINTED), 9"
   - 31200100 STABILIZED SUBBASE, 4"
   - 30300112 AGGREGATE SUBGRADE IMPROVEMENT, 12"
   - 21001000 GEOTECHNICAL FABRIC FOR GROUND STABILIZATION
3. PAVEMENT SECTION (MAIN STREET AND SILVER STREET)
   - 42000401 PORTLAND CEMENT CONCRETE PAVEMENT (JOINTED), 9"
   - 30300112 AGGREGATE SUBGRADE IMPROVEMENT, 12"
   - 21001000 GEOTECHNICAL FABRIC FOR GROUND STABILIZATION

RDY-18

MODEL: Default
FILE NAME: pw:\\mi-us-cw.bentley.com:mi-us-pw-03\Documents\Chicago 1101 Projects\179740 IDOT Cedar\SEx PRR5.0 CADD\CAD Sheets\068C55-Ir-R-Main St 02.dgn

Michael Baker INTERNATIONAL
200 W Adams Street
Suite 1800
Chicago, IL 60606
P:+ 312.707.8970
FAX: 312.707.8604

| | | | |
|---|---|---|---|
| USER NAME = DLamb | DESIGNED - SAS | REVISED - | |
| | DRAWN - DCL | REVISED - | |
| PLOT SCALE = 40.0000 ' / in. | CHECKED - RBB | REVISED - | |
| PLOT DATE = 6/6/2023 | DATE - 6/08/2023 | REVISED - | |

**STATE OF ILLINOIS**
**DEPARTMENT OF TRANSPORTATION**

**CEDAR ST. (IL-8/IL-116) OVER TZPR & IL-29**
**PROPOSED ROADWAY PLAN – MAIN STREET**

SCALE: 1"=20' | SHEET 18 OF 22 SHEETS | STA. 102+00.00 TO STA. 107+50.00

| F.A.P. RTE. | SECTION | COUNTY | TOTAL SHEETS | SHEET NO. |
|---|---|---|---|---|
| VAR. | 13 (HVB, HB-3) BR-1:R | TAZEWELL | 1173 | 99 |
| | | CONTRACT NO. 68C55 | | |
| | ILLINOIS | FED. AID PROJECT | | |

0 20 40 60
SCALE IN FEET

ROADWAY NOTES

1. PAVEMENT SECTION (CEDAR STREET)
   - 42000401 PORTLAND CEMENT CONCRETE PAVEMENT (JOINTED), 9"
   - 31200100 STABILIZED SUBBASE, 4"
   - 30300112 AGGREGATE SUBGRADE IMPROVEMENT, 12"
   - 21001000 GEOTECHNICAL FABRIC FOR GROUND STABILIZATION
2. PAVEMENT SECTION (RAMPS)
   - 42000401 PORTLAND CEMENT CONCRETE PAVEMENT (JOINTED), 9"
   - 31200100 STABILIZED SUBBASE, 4"
   - 30300112 AGGREGATE SUBGRADE IMPROVEMENT, 12"
   - 21001000 GEOTECHNICAL FABRIC FOR GROUND STABILIZATION
3. PAVEMENT SECTION (MAIN STREET AND SILVER STREET)
   - 42000401 PORTLAND CEMENT CONCRETE PAVEMENT (JOINTED), 9"
   - 30300112 AGGREGATE SUBGRADE IMPROVEMENT, 12"
   - 21001000 GEOTECHNICAL FABRIC FOR GROUND STABILIZATION

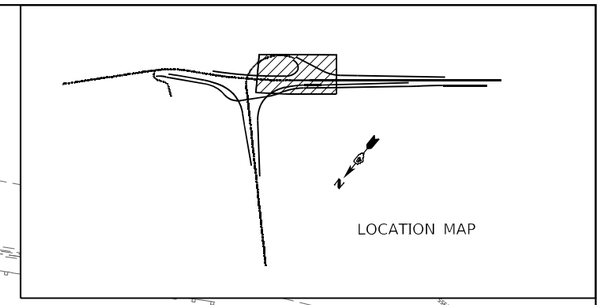


PR ℄ CEDAR ST
(SEE SHEET RDY-04)

CONSTRUCTION LIMIT

PR ℄ RAMP B
(SEE SHEET RDY-07)

RETAINING WALL D SN 090-8520
(SEE STRUCTURAL PLANS)

PR ℄ RAMP A
(SEE SHEET RDY-05)

RAMP B

RAMP A

RAMP C

MAIN ST (US-24/IL-29)

MATCHLINE MAIN STREET, STA 107+50.00
SEE SHEET RDY-18

MATCHLINE MAIN STREET, STA 113+00.00
SEE SHEET RDY-20

PCC SIDEWALK, 4"

COMB CC&G TB6.24

RAMPED NOSE
CONC MED TSB6.24

REFER TO ADA DETAILS SHEETS
FOR ADDITIONAL INFORMATION

RAMPED NOSE
CONC MED TSB6.24

REFER TO ADA DETAILS SHEETS
FOR ADDITIONAL INFORMATION

PCC SHOULDERS, 9";
SUB GRAN MATL TY C, VAR DEPTH
AGG SUBGRADE IMP, 12"
GEOTECHNICAL FABRIC
FOR GND STABILIZATION

30:1 TAPER

108+89.94
34.35' RT

CONC MED TSB6.12

109+60.37, 26.00' RT
END TAPER

EX ℄ MAIN ST

AGGREGATE
SHLDS B, 8"

PR ℄ RAMP C
(SEE SHEET RDY-12)

PR ℄ FUTURE MULTI-USE PATH
(SEE SHEET MUP-03)

PAVEMENT
REPLACEMENT
(SEE NOTE 3)

RETAINING WALL A
SN 090-8517
(SEE STRUCTURAL PLANS)

EX R.O.W./A.C.

CONSTRUCTION LIMIT

PR A.C.

PR R.O.W.

RDY-19

| | | | | | | | | | |
|---|---|---|---|---|---|---|---|---|---|
| Michael Baker INTERNATIONAL 200 W Adams Street Suite 1850 Chicago, IL 60606 PH: 312.707.8770 FAX: 312.707.8804 | USER NAME = DLamb | DESIGNED - SAS | REVISED - | STATE OF ILLINOIS DEPARTMENT OF TRANSPORTATION | CEDAR ST. (IL-84/IL-116) OVER TZPR & IL-29 PROPOSED ROADWAY PLAN – MAIN STREET | F.A.P. RTE. | SECTION | COUNTY | TOTAL SHEETS / SHEET NO. |
| | | DRAWN - DCL | REVISED - | | | VAR. | 13 (HVB, HB-3) BR-1:R | TAZEWELL | 1173 / 100 |
| | PLOT SCALE = 40.0000 ' / in. | CHECKED - RBB | REVISED - | | | | | CONTRACT NO. 68C55 | |
| | PLOT DATE = 6/6/2023 | DATE - 6/08/2023 | REVISED - | | SCALE: 1"=20' / SHEET 19 OF 22 SHEETS / STA. 107+50.00 TO STA. 113+00.00 | | ILLINOIS | FED. AID PROJECT | |

MODEL: Default
FILE NAME: pw:\\mb-us-pw.bentley.com:mb-us-pw-03\Documents\Chicago\ILI01 Projects\179740 IDOT Cedar\Site\ Phills.5.0 CADD\CAD Sheets\0468C55-sht-pl-Main St 03.dgn