SIGN PANEL – TYPE 1

ALL DIMENSIONS ARE IN INCHES UNLESS NOTED OTHERWISE

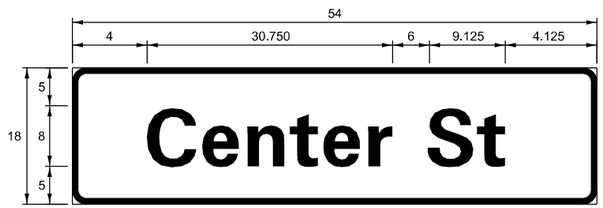

DESIGN SERIES	AREA (SQ FT)	SIGN PANEL TYPE	SHEETING TYPE	QTY REQUIRED
D	6.75	1	ZZ	1

NOTE: FOR ADDITIONAL DESIGN AND INSTALLATION INFORMATION PLEASE SEE DISTRICT ONE MAST ARM MOUNTED STREET NAME SIGNS DETAIL.

SCHEDULE OF QUANTITIES

	ITEM DESCRIPTION	UNITS	TOTAL QTY
	CHANGEABLE MESSAGE SIGN	CAL DA	56
	SIGN PANEL - TYPE 1	SQ FT	7
	UNDERGROUND CONDUIT, GALVANIZED STEEL, 2" DIA.	FOOT	575
	UNDERGROUND CONDUIT, GALVANIZED STEEL, 3" DIA.	FOOT	50
	UNDERGROUND CONDUIT, GALVANIZED STEEL, 4" DIA.	FOOT	564
	HANDHOLE	EACH	1
	HEAVY-DUTY HANDHOLE	EACH	4
	DOUBLE HANDHOLE	EACH	2
	ELECTRIC CABLE IN CONDUIT, SIGNAL NO. 14 3C	FOOT	662
	ELECTRIC CABLE IN CONDUIT, SIGNAL NO. 14 5C	FOOT	3,260
	ELECTRIC CABLE IN CONDUIT, SIGNAL NO. 14 7C	FOOT	780
	ELECTRIC CABLE IN CONDUIT, LEAD-IN, NO. 14 1 PAIR	FOOT	1,283
	ELECTRIC CABLE IN CONDUIT, SERVICE, NO. 6 2 C	FOOT	349
	ELECTRIC CABLE IN CONDUIT, EQUIPMENT GROUNDING CONDUCTOR, NO. 6 1C	FOOT	932
	TRAFFIC SIGNAL POST, GALVANIZED STEEL 16 FT.	EACH	1
	STEEL MAST ARM ASSEMBLY AND POLE, 32 FT.	EACH	2
	STEEL COMBINATION MAST ARM ASSEMBLY AND POLE 22 FT.	EACH	1
	STEEL COMBINATION MAST ARM ASSEMBLY AND POLE 36 FT.	EACH	1
	CONCRETE FOUNDATION, TYPE A	FOOT	8
	CONCRETE FOUNDATION, TYPE C	FOOT	4
	CONCRETE FOUNDATION, TYPE E 30-INCH DIAMETER	FOOT	27
	CONCRETE FOUNDATION, TYPE E 36-INCH DIAMETER	FOOT	22
	SIGNAL HEAD, LED, 1-FACE, 3-SECTION, MAST-ARM MOUNTED	EACH	6
	SIGNAL HEAD, LED, 1-FACE, 3-SECTION, BRACKET MOUNTED	EACH	3
	SIGNAL HEAD, LED, 1-FACE, 4-SECTION, BRACKET MOUNTED	EACH	1
	SIGNAL HEAD, LED, 1-FACE, 5-SECTION, MAST-ARM MOUNTED	EACH	2
	TRAFFIC SIGNAL BACKPLATE, LOUVERED, FORMED PLASTIC	EACH	8
	INDUCTIVE LOOP DETECTOR	EACH	3
	DETECTOR LOOP, TYPE I	FOOT	175
✱	LIGHT DETECTOR	EACH	2
✱	LIGHT DETECTOR AMPLIFIER	EACH	1
✱	EMERGENCY VEHICLE PRIORITY SYSTEM LINE SENSOR CABLE, NO. 20 3/C	FOOT	662
	SERVICE INSTALLATION, GROUND MOUNTED, METERED	EACH	1
	REMOTE CONTROLLED VIDEO SYSTEM	EACH	1
	FULL-ACTUATED CONTROLLER AND TYPE SUPER R CABINET	EACH	1
	UNINTERRUPTABLE POWER SUPPLY (SPECIAL)	EACH	1
	LED SIGNAL FACE, LENS COVER	EACH	12
	VIDEO VEHICLE DETECTION SYSTEM, SINGLE APPROACH	EACH	1
	CAMERA MOUNTING ASSEMBLY	EACH	1

✱ 100% COST TO THE CITY OF JOLIET

TS 21833

TS SHT NO. 11

MODEL: Default
FILE NAME: pw:\\transystems-pw.bentley.com:transyscorp-pw1-hosted\Documents\Projects_2018\CH401\401180022\03-WSP\CAD\62R22-INT-4_Center\Sheets\Signals\D162R22-sht-Quantities_WB I-80.dgn

SINGH
SINGH + ASSOCIATES, INC.
CONSULTING ENGINEERS

USER NAME = ggedemer	DESIGNED GJG	REVISED -	
	DRAWN GJG	REVISED -	
PLOT SCALE = 40.000 ' / in.	CHECKED MG	REVISED -	
PLOT DATE = 4/24/2025	DATE 4/25/2025	REVISED -	

STATE OF ILLINOIS
DEPARTMENT OF TRANSPORTATION

MAST ARM MOUNTED STREET NAME SIGNS
AND SCHEDULE OF QUANTITIES
CENTER STREET AT WB I–80 RAMPS

SCALE: NONE | SHEET OF SHEETS | STA. TO STA.

F.A.I. RTE.	SECTION	COUNTY	TOTAL SHEETS	SHEET NO.
80	FAI 80 21 INTERCHANGE	WILL	1209	601
		CONTRACT NO. 62R22		
		ILLINOIS FED. AID PROJECT		

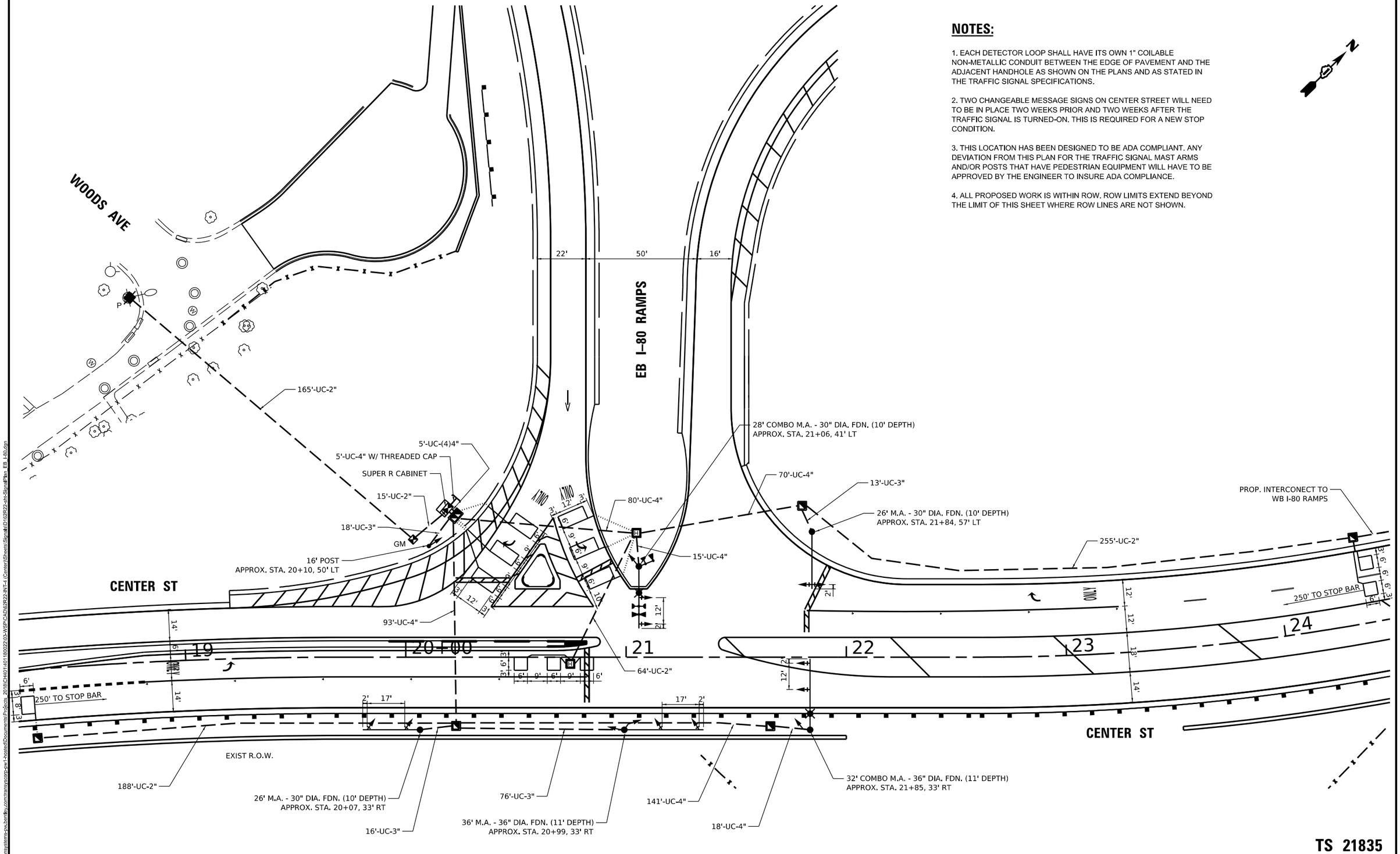

NOTES:

1. EACH DETECTOR LOOP SHALL HAVE ITS OWN 1" COILABLE NON-METALLIC CONDUIT BETWEEN THE EDGE OF PAVEMENT AND THE ADJACENT HANDHOLE AS SHOWN ON THE PLANS AND AS STATED IN THE TRAFFIC SIGNAL SPECIFICATIONS.

2. TWO CHANGEABLE MESSAGE SIGNS ON CENTER STREET WILL NEED TO BE IN PLACE TWO WEEKS PRIOR AND TWO WEEKS AFTER THE TRAFFIC SIGNAL IS TURNED-ON. THIS IS REQUIRED FOR A NEW STOP CONDITION.

3. THIS LOCATION HAS BEEN DESIGNED TO BE ADA COMPLIANT. ANY DEVIATION FROM THIS PLAN FOR THE TRAFFIC SIGNAL MAST ARMS AND/OR POSTS THAT HAVE PEDESTRIAN EQUIPMENT WILL HAVE TO BE APPROVED BY THE ENGINEER TO INSURE ADA COMPLIANCE.

4. ALL PROPOSED WORK IS WITHIN ROW. ROW LIMITS EXTEND BEYOND THE LIMIT OF THIS SHEET WHERE ROW LINES ARE NOT SHOWN.

TS 21835

TS SHT NO. 12

MODEL: Default
FILE NAME: pw:\\transystems-pw.bentley.com:transyscorp-pw1-hosted\Documents\Projects_2018\CH401\401180022\03-WSP\CAD\62R22-INT-1 (Center)\Sheets\Signals\D162R22-sht-SignalPlan_EB_I-80.dgn

SINGH
SINGH + ASSOCIATES, INC.
CONSULTING ENGINEERS

USER NAME = ggedemer	DESIGNED GJG	REVISED -	
	DRAWN GJG	REVISED -	
PLOT SCALE = 40.000 ' / in.	CHECKED MG	REVISED -	
PLOT DATE = 4/24/2025	DATE 4/25/2025	REVISED -	

STATE OF ILLINOIS
DEPARTMENT OF TRANSPORTATION

TRAFFIC SIGNAL INSTALLATION PLAN
CENTER STREET AT EB I-80 RAMPS

SCALE: 1"=20' | SHEET OF SHEETS | STA. TO STA.

F.A.I. RTE.	SECTION	COUNTY	TOTAL SHEETS	SHEET NO.
80	FAI 80 21 INTERCHANGE	WILL	1209	602
		CONTRACT NO. 62R22		
		ILLINOIS	FED. AID PROJECT	

PROPOSED CONTROLLER SEQUENCE

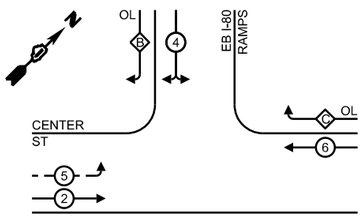

LEGEND:

- PROTECTED PHASE
- PROTECTED/PERMITTED PHASE
- PEDESTRIAN PHASE
- OVERLAP

RIGHT TURN OVERLAP PHASE DESIGNATION:

OVERLAP LETTER		PERMISSIVE PHASE		PROTECTED PHASE
B	=	5	+	4
C	=	6	+	4

PROPOSED EMERGENCY VEHICLE PREEMPTION SEQUENCE

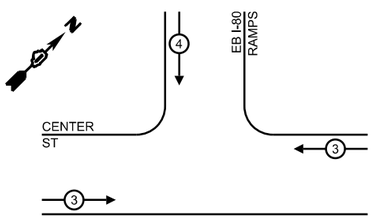

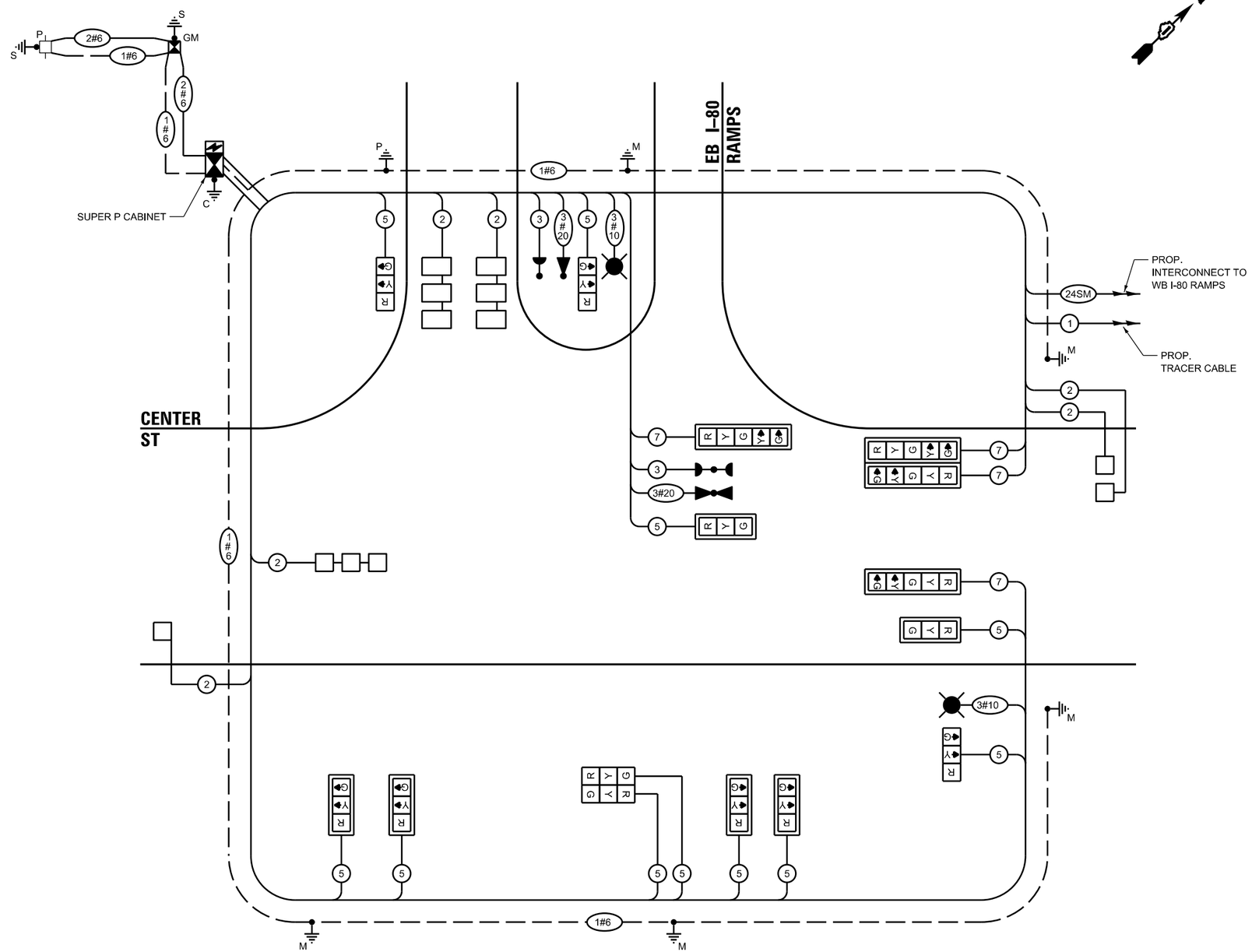

CABLE PLAN
(NOT TO SCALE)

TRAFFIC SIGNAL ELECTRICAL SERVICE REQUIREMENTS

EQUIPMENT TYPE	QUANTITY	UNIT WATTAGE	TOTAL WATTAGE
SIGNAL HEAD 1 OR 3-SECTION	11	11	121
4-SECTION	-	14	-
5-SECTION	4	13	52
PROGRAMMABLE 3-SECTION	-	22	-
4-SECTION	-	32	-
5-SECTION	-	28	-
PEDESTRIAN SIGNAL	-	15	-
CONTROLLER	1	150	150
MASTER CONTROLLER	-	100	-
UPS	1	25	25
DETECTION RADAR OR VIDEO	-	20	-
BLANK-OUT SIGN	-	25	-
NETWORK SWITCH II OR III	-	35	-
CELLULAR MODEM	-	15	-
TOTAL UPS SIZING			348
UPS CHARGING	1	225	225
BATTERY HEATER MAT	1	180	180
CABINET HEATER	1	200	200
FLASHER	-	15	-
LED STREET NAME SIGN	-	120	-
LUMINAIRE	-	240	-
TOTAL SERVICE WIRE SIZING			953

ENERGY COSTS TO:
ILLINOIS DEPARTMENT OF TRANSPORTATION
DIVISION OF HIGHWAY/DISTRICT 1
201 WEST CENTER COURT/SCHAUMBURG, IL 60196-1096

ENERGY SUPPLY: CONTACT: COMED NEW BUSINESS
PHONE: (866)-639-3532
COMPANY: COMED
ACCOUNT NUMBER: 14311-22272
METER NUMBER: ---

NOTES:

ALL RED INDICATIONS SHALL HAVE A LENS COVER

TS 21835

TS SHT NO. 13

MODEL: Default
FILE NAME: pw:\\transystems-pw.bentley.com:transyscorp-pw1-hosted\Documents\Projects_2018\CH401\401180022\03-WSP\CAD\62R22-INT-4_Center\Sheets\Signals\D162R22-sht-CablePlan_EB_I-80.dgn

SINGH
SINGH + ASSOCIATES, INC.
CONSULTING ENGINEERS

USER NAME = ggedemer	DESIGNED GJG	REVISED -	
	DRAWN GJG	REVISED -	
PLOT SCALE = 40.000 ' / in.	CHECKED MG	REVISED -	
PLOT DATE = 4/24/2025	DATE 4/25/2025	REVISED -	

STATE OF ILLINOIS
DEPARTMENT OF TRANSPORTATION

CABLE PLAN, PHASE DESIGNATION DIAGRAM, AND EMERGENCY VEHICLE PREEMPTION SEQUENCE
CENTER ST AT EB I-80 RAMPS

SCALE: NONE | SHEET OF SHEETS | STA. TO STA.

F.A.I. RTE.	SECTION	COUNTY	TOTAL SHEETS	SHEET NO.
80	FAI 80 21 INTERCHANGE	WILL	1209	603
		CONTRACT NO. 62R22		
		ILLINOIS	FED. AID PROJECT	

SIGN PANEL – TYPE 1

ALL DIMENSIONS ARE IN INCHES UNLESS NOTED OTHERWISE

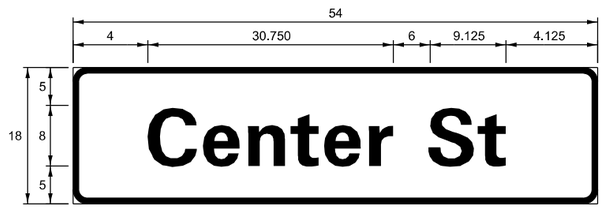

DESIGN SERIES	AREA (SQ FT)	SIGN PANEL TYPE	SHEETING TYPE	QTY REQUIRED
D	6.75	1	ZZ	2

NOTE: FOR ADDITIONAL DESIGN AND INSTALLATION INFORMATION PLEASE SEE DISTRICT ONE MAST ARM MOUNTED STREET NAME SIGNS DETAIL.

SCHEDULE OF QUANTITIES

	ITEM DESCRIPTION	UNITS	TOTAL QTY
	CHANGEABLE MESSAGE SIGN	CAL DA	56
	SIGN PANEL - TYPE 1	SQ FT	13
	UNDERGROUND CONDUIT, GALVANIZED STEEL, 2" DIA.	FOOT	687
	UNDERGROUND CONDUIT, GALVANIZED STEEL, 3" DIA.	FOOT	123
	UNDERGROUND CONDUIT, GALVANIZED STEEL, 4" DIA.	FOOT	442
	HANDHOLE	EACH	5
	HEAVY-DUTY HANDHOLE	EACH	2
	DOUBLE HANDHOLE	EACH	1
	ELECTRIC CABLE IN CONDUIT, SIGNAL NO. 14 3C	FOOT	311
	ELECTRIC CABLE IN CONDUIT, SIGNAL NO. 14 5C	FOOT	2,296
	ELECTRIC CABLE IN CONDUIT, SIGNAL NO. 14 7C	FOOT	1,001
	ELECTRIC CABLE IN CONDUIT, LEAD-IN, NO. 14 1 PAIR	FOOT	1,631
	ELECTRIC CABLE IN CONDUIT, SERVICE, NO. 6 2 C	FOOT	219
	ELECTRIC CABLE IN CONDUIT, EQUIPMENT GROUNDING CONDUCTOR, NO. 6 1C	FOOT	694
	TRAFFIC SIGNAL POST, GALVANIZED STEEL 16 FT.	EACH	1
	STEEL MAST ARM ASSEMBLY AND POLE, 36 FT.	EACH	1
	STEEL COMBINATION MAST ARM ASSEMBLY AND POLE 28 FT.	EACH	1
	STEEL COMBINATION MAST ARM ASSEMBLY AND POLE 32 FT.	EACH	1
	CONCRETE FOUNDATION, TYPE A	FOOT	8
	CONCRETE FOUNDATION, TYPE C	FOOT	4
	CONCRETE FOUNDATION, TYPE E 30-INCH DIAMETER	FOOT	30
	CONCRETE FOUNDATION, TYPE E 36-INCH DIAMETER	FOOT	22
	SIGNAL HEAD, LED, 1-FACE, 3-SECTION, MAST-ARM MOUNTED	EACH	6
	SIGNAL HEAD, LED, 1-FACE, 3-SECTION, BRACKET MOUNTED	EACH	5
	SIGNAL HEAD, LED, 1-FACE, 5-SECTION, MAST-ARM MOUNTED	EACH	4
	TRAFFIC SIGNAL BACKPLATE, LOUVERED, FORMED PLASTIC	EACH	10
	INDUCTIVE LOOP DETECTOR	EACH	7
	DETECTOR LOOP, TYPE I	FOOT	502
*	LIGHT DETECTOR	EACH	2
*	LIGHT DETECTOR AMPLIFIER	EACH	1
*	EMERGENCY VEHICLE PRIORITY SYSTEM LINE SENSOR CABLE, NO. 20 3/C	FOOT	309
	SERVICE INSTALLATION, GROUND MOUNTED, METERED	EACH	1
	FULL-ACTUATED CONTROLLER AND TYPE SUPER R CABINET	EACH	1
	UNINTERRUPTABLE POWER SUPPLY (SPECIAL)	EACH	1
	LED SIGNAL FACE, LENS COVER	EACH	15

* 100% COST TO THE CITY OF JOLIET

TS 21835

TS SHT NO. 14

MODEL: Default

FILE NAME: pw:\\transystems-pw.bentley.com:transyscorp-pw1-hosted\Documents\Projects_2018\CH401\401180022\03-WSP\CAD\62R22-INT-4_Center\Sheets\Signals\D162R22-sht-Quantities_EB_I-80.dgn

SINGH
SINGH + ASSOCIATES, INC.
CONSULTING ENGINEERS

USER NAME = ggedemer	DESIGNED GJG	REVISED -	
	DRAWN GJG	REVISED -	
PLOT SCALE = 40.000 ' / in.	CHECKED MG	REVISED -	
PLOT DATE = 4/24/2025	DATE 4/25/2025	REVISED -	

STATE OF ILLINOIS
DEPARTMENT OF TRANSPORTATION

MAST ARM MOUNTED STREET NAME SIGNS
AND SCHEDULE OF QUANTITIES
CENTER STREET AT EB I–80 RAMPS

SCALE: NONE | SHEET OF SHEETS | STA. TO STA.

F.A.I. RTE.	SECTION	COUNTY	TOTAL SHEETS	SHEET NO.
80	FAI 80 21 INTERCHANGE	WILL	1209	604
		CONTRACT NO. 62R22		
		ILLINOIS	FED. AID PROJECT	

NOTE:

1. ALL PROPOSED WORK IS WITHIN ROW. ROW LIMITS EXTEND BEYOND THE LIMIT OF THIS SHEET WHERE ROW LINES ARE NOT SHOWN.

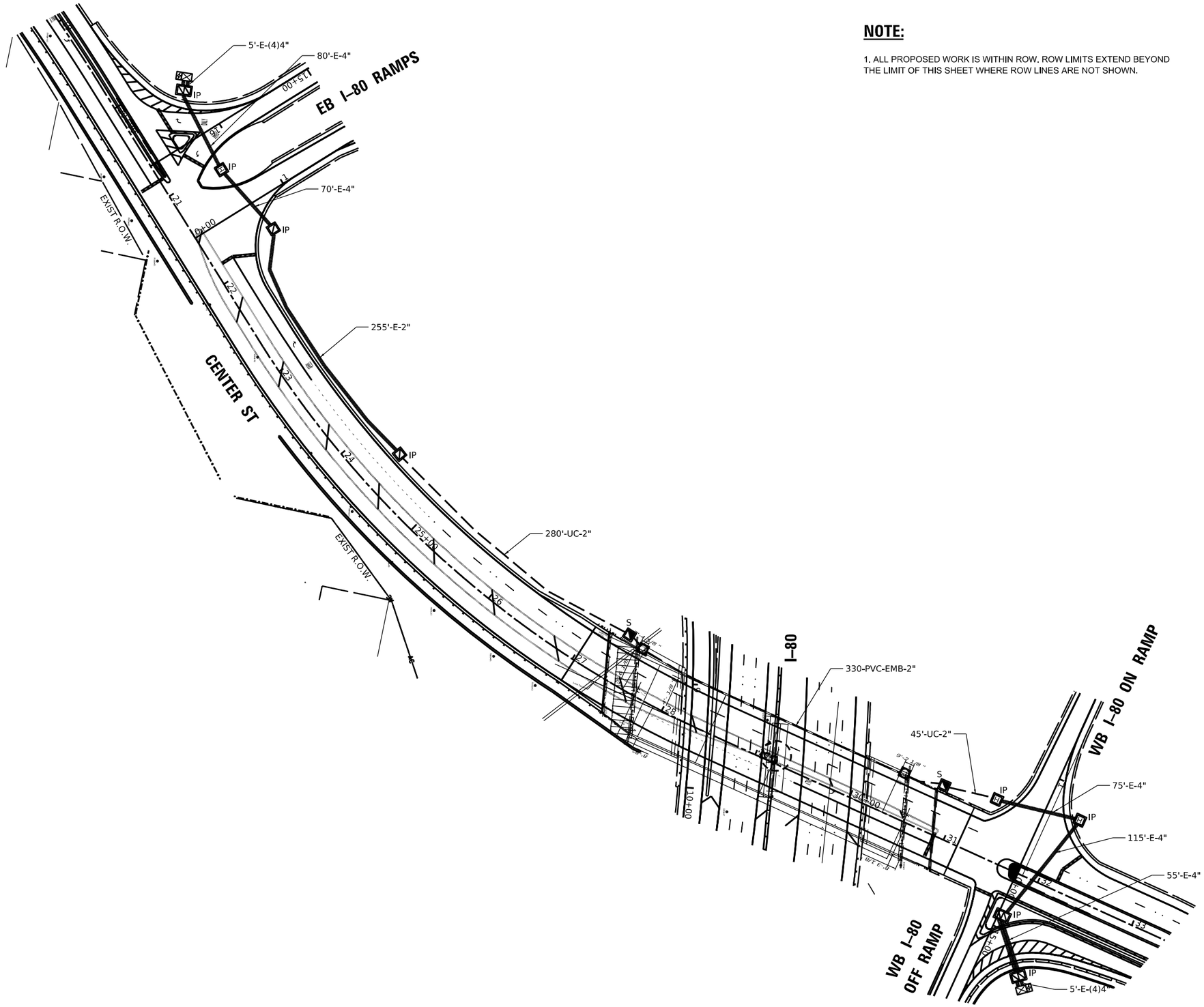

TS SHT NO. 15

MODEL: Default
FILE NAME: pw://transystems-pw.bentley.com:transyscorp-pw-1-hosted/Documents/Projects_2018/CH401\401180022\03-WSP\CAD\62R22-INT-4 (Center)\Sheets\Signal\D162R22-sht-Interconnect_Center.dgn

SINGH
SINGH + ASSOCIATES, INC.
CONSULTING ENGINEERS

USER NAME = ggedemer	DESIGNED GJG	REVISED -	
	DRAWN GJG	REVISED -	
PLOT SCALE = 100,000 ' / in.	CHECKED MG	REVISED -	
PLOT DATE = 4/24/2025	DATE 4/25/2025	REVISED -	

STATE OF ILLINOIS
DEPARTMENT OF TRANSPORTATION

INTERCONNECT PLAN
CENTER ST AT I-80

SCALE: 1"=50' | SHEET OF SHEETS | STA. TO STA.

F.A.I. RTE.	SECTION	COUNTY	TOTAL SHEETS	SHEET NO.
80	FAI 80 21 INTERCHANGE	WILL	1209	605

CONTRACT NO. 62R22

ILLINOIS | FED. AID PROJECT

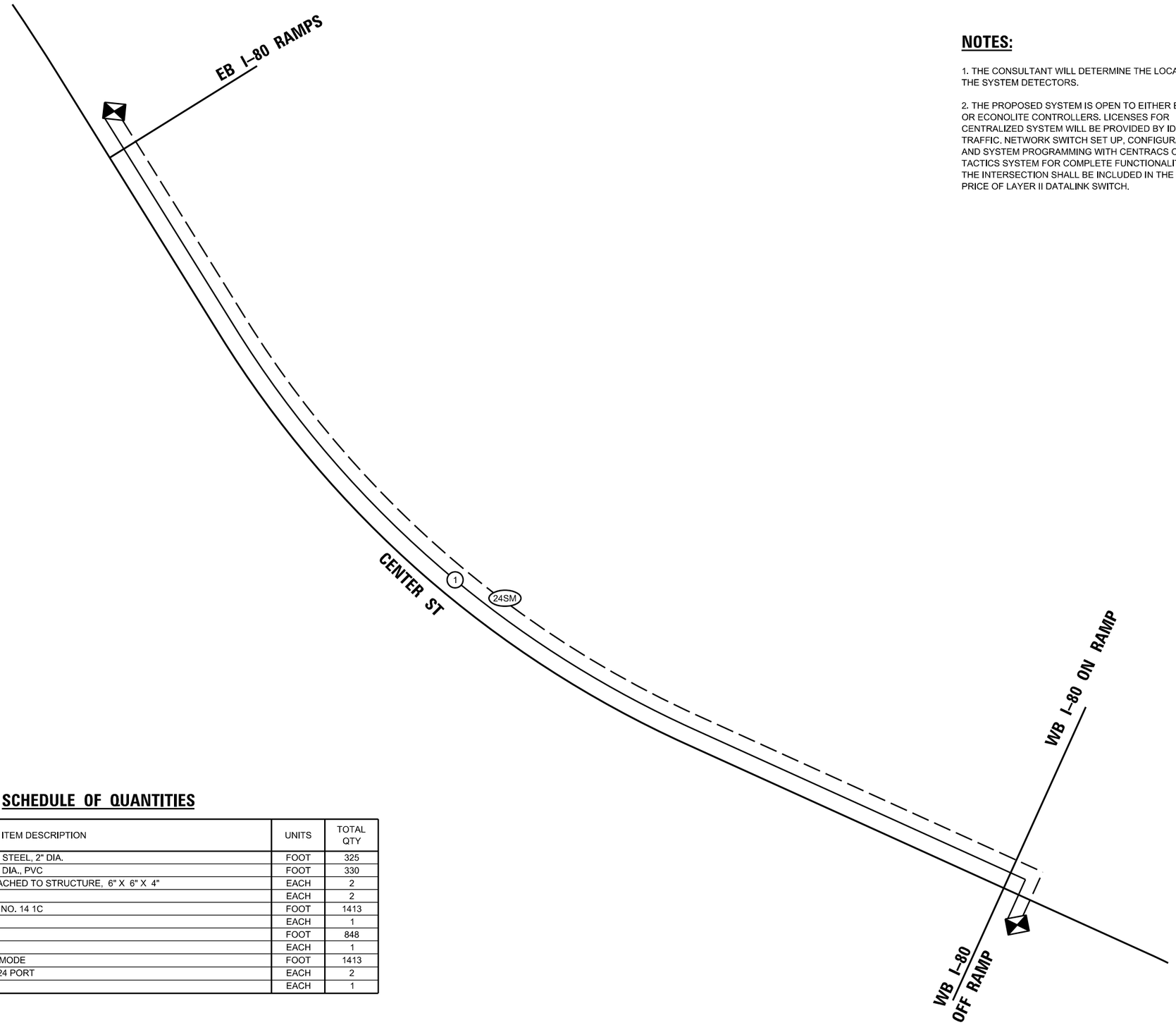

NOTES:

1. THE CONSULTANT WILL DETERMINE THE LOCATION OF THE SYSTEM DETECTORS.

2. THE PROPOSED SYSTEM IS OPEN TO EITHER EAGLE OR ECONOLITE CONTROLLERS. LICENSES FOR CENTRALIZED SYSTEM WILL BE PROVIDED BY IDOT TRAFFIC. NETWORK SWITCH SET UP, CONFIGURATION, AND SYSTEM PROGRAMMING WITH CENTRACS OR TACTICS SYSTEM FOR COMPLETE FUNCTIONALITY OF THE INTERSECTION SHALL BE INCLUDED IN THE UNIT PRICE OF LAYER II DATALINK SWITCH.

SCHEDULE OF QUANTITIES

ITEM DESCRIPTION	UNITS	TOTAL QTY
UNDERGROUND CONDUIT, GALVANIZED STEEL, 2" DIA.	FOOT	325
CONDUIT EMBEDDED IN STRUCTURE, 2" DIA., PVC	FOOT	330
JUNCTION BOX, STAINLESS STEEL, ATTACHED TO STRUCTURE, 6" X 6" X 4"	EACH	2
HANDHOLE	EACH	2
ELECTRIC CABLE IN CONDUIT, TRACER, NO. 14 1C	FOOT	1413
CELLULAR MODEM	EACH	1
OUTDOOR RATED NETWORK CABLE	FOOT	848
LAYER II (DATALINK) SWITCH	EACH	1
FIBER OPTIC CABLE 24 FIBERS, SINGLE MODE	FOOT	1413
FIBER OPTIC INTERCONNECT CENTER, 24 PORT	EACH	2
OPTIMIZE TRAFFIC SIGNAL SYSTEM	EACH	1

TS SHT NO. 16

MODEL: Default
FILE NAME: pw:\\transyssoprpw.bentley.com:transyssoprpw-hosted\Documents\Projects_2018\CH401\401180022\03-WSP\CAD\62R22-INT-4 (Center)\Sheets\Signal\D162R22-sht-Schematic_Center.dgn

SINGH
SINGH + ASSOCIATES, INC.
CONSULTING ENGINEERS

USER NAME = ggedemer	DESIGNED GJG	REVISED -	
	DRAWN GJG	REVISED -	
PLOT SCALE = 100,000 ' / in.	CHECKED MG	REVISED -	
PLOT DATE = 4/24/2025	DATE 4/25/2025	REVISED -	

STATE OF ILLINOIS
DEPARTMENT OF TRANSPORTATION

PROPOSED INTERCONNECT SCHEMATIC AND SCHEDULE OF QUANTITIES
CENTER ST AT I-80

SCALE: 1"=50' | SHEET OF SHEETS | STA. TO STA.

F.A.I. RTE.	SECTION	COUNTY	TOTAL SHEETS	SHEET NO.
80	FAI 80 21 INTERCHANGE	WILL	1209	606

CONTRACT NO. 62R22

ILLINOIS | FED. AID PROJECT

SYMBOLS FOR PROPOSED WORK

- HEAVY DUTY HANDHOLE (ELECTRICAL)
- COMMUNICATIONS VAULT (IDOT)
- COMMUNICATIONS VAULT (THIRD PARTY)
- CLOSED CIRCUIT TELEVISION CAMERA STRUCTURE FOUNDATION*
- CONCRETE FOUNDATION (SPECIAL) - FOR FUTURE DISCONNECT

*TYPE AND SIZE AS INDICATED ON PLANS

LINESTYLES FOR PROPOSED WORK

- E — CONDUIT FOR FUTURE ELECTRICAL CABLE*
- FO — MICRODUCT OR INNERDUCT FOR FUTURE FIBER OPTIC CABLE*
- CONDUIT SLEEVE*

*TYPE AND SIZE AS INDICATED ON PLANS

NON-ITS ELEMENTS LEGEND

- T — *EXISTING UNDERGROUND TELEPHONE*
- G — *EXISTING UNDERGROUND GAS*
- CTV — CT — *EXISTING UNDERGROUND CABLE TV*
- W — *EXISTING UNDERGROUND WATER*
- O — *EXISTING UNDERGROUND OIL*
- *EXISTING ACCESS CONTROL AND ROW FENCE*
- A — *EXISTING AERIAL LINE*
- *EXISTING GUARDRAIL*
- *EXISTING STORM SEWER*
- *EXISTING SANITARY SEWER*
- *EXISTING LIGHTING*
- *EXISTING SIGNAGE*
- *PROPOSED ACCESS CONTROL AND ROW FENCE*
- *PROPOSED GUARDRAIL*
- *PROPOSED STORM SEWER*
- *PROPOSED UNDERDRAIN*
- *PROPOSED DRAINAGE*
- *PROPOSED DRAINAGE FLOW*
- *PROPOSED LIGHTING*
- *PROPOSED SIGNAGE*

ABBREVIATIONS

ATS	ATTACHED TO STRUCTURE
CNC	COILABLE NONMETALLIC CONDUIT
COMM	COMMUNICATIONS
(E)	EXISTING TO REMAIN
FRE	FIBERGLASS REINFORCED EPOXY (CONDUIT)
FT	FEET
GSC	GALVANIZED STEEL CONDUIT
HDHH	HEAVY-DUTY HANDHOLE
(I)	INSTALL
NTS	NOT TO SCALE
OFF	OFFSET

ITS GENERAL NOTES

1. AFTER THE INITIAL LOCATE OF IDOT FACILITIES, THE CONTRACTOR WILL BE RESPONSIBLE FOR LOCATING EXISTING IDOT ELECTRICAL FACILITIES AT HIS/HER OWN EXPENSE. THE CONTRACTOR SHALL ALSO BE LIABLE FOR ANY DAMAGE TO IDOT FACILITIES RESULTING FROM INACCURATE LOCATING.

2. THE CONTRACTOR SHALL BE RESPONSIBLE FOR THE PROTECTION OF ALL UNDERGROUND OR SURFACE UTILITIES EVEN THOUGH THEY MAY NOT BE SHOWN IN THE PLANS. ANY UTILITY THAT IS DAMAGED DURING CONSTRUCTION SHALL BE REPAIRED OR REPLACED TO THE SATISFACTION OF THE ENGINEER. THIS WORK WILL BE AT THE CONTRACTOR'S EXPENSE.

3. POTHOLING TO LOCATE EXISTING UNDERGROUND UTILITIES SHALL BE INCLUDED IN THE CONTRACT BID PRICE FOR THE UNDERGROUND CONDUIT/MICRODUCT/INNERDUCT PAY ITEMS.

4. THE CONTRACTOR IS RESPONSIBLE FOR THE COST OF UNCOVERING OR HAND DIGGING AROUND UTILITIES AS NECESSARY. THIS COST OF THIS WORK SHALL BE INCLUDED IN THE UNIT PRICES FOR THE CONDUIT/MICRODUCT/INNERDUCT PAY ITEMS.

5. THE CONTRACTOR SHALL VERIFY ADEQUATE CLEARANCE OVER/UNDER EXISTING AND PROPOSED FACILITIES BEFORE INSTALLING DUCTS OR CONDUIT. WHERE THE CONTRACTOR'S EXCAVATION MEETS AN OBSTRUCTION, THE CONTRACTOR SHALL NOTIFY THE ENGINEER FOR DIRECTION IN WRITING PRIOR TO EXCAVATION.

6. CONDUIT OR DUCT CROSSING OVER/UNDER OTHER UTILITIES OR DRAINAGE SHALL MAINTAIN A SEPERATION OF AT LEAST 18 INCHES OR AS SPECIFIED BY OWNING UTILITY.

7. CONDUITS AND DUCTS SHALL BE POSITIONED IN THE FIELD TO AVOID CONFLICT WITH ROADWAY UNDERDRAINS AND OTHER EXISTING AND PROPOSED UTILITIES.

8. NO ADDITIONAL COMPENSATION SHALL BE ALLOWED FOR PLACING CONDUIT AT GREATER THAN MINIMUM DEPTH SPECIFIED TO AVOID OBSTACLES SUCH AS UNDERGROUND UTILITIES, DRAIANGE PIPES, AND STRUCTURES OR TO ENTER COMMUNICATIONS VAULTS OR HANDHOLES.

9. THE CONTRACTOR SHALL AVOID TRENCHING THROUGH WETLAND AREA, ROADSIDE DITCHES AND RETENTION PONDS.

10. IDOT MICRODUCT SHALL ONLY ENTER IDOT COMMUNICATIONS VAULTS.

11. THIRD PARTY MICRODUCT SHALL ONLY ENTER THIRD PARTY COMMUNICATIONS VAULTS.

12. ALL EXCAVATED MATERIAL, WHICH INCLUDES DIGGING OR GRADING OF ANY SOIL OR FILL MATERIAL, WITH THE EXCEPTION OF AGGREGATE FILLS, MUST BE INCORPORATED WITHIN THE IDOT RIGHT OF WAY DUE TO ENVIRONMENTAL DOCUMENTATION REQUIREMENTS. EXCAVATED MATERIALS SHALL BE DISPOSED OF AT LOCATIONS DESIGNATED BY THE ENGINEER. ANY SUCH DISPOSAL SHALL BE COMPLETED IN SUCH A MANNER THAT PUBLIC OR PRIVATE PROPERTY WILL NOT BE DAMAGED OR ENDANGERED AND SHALL NOT CREATE AN UNSIGHTLY OR OBJECTIONABLE APPEARANCE OR DETRACT FORM THE NATURAL TOPOGRAPHIC FEATURES WITHOUT WRITTEN PERMISSION FROM THE ENGINEER.

13. ALL SURPLUS MATERIALS SHALL BE DISPOSED OF IN ACCORDANCE WITH ARTICLE 202.03 OF THE STANDARD SPECIFICATIONS.

14. ELECTRICAL WORK SHALL CONFORM WITH NATIONAL, STATE, AND LOCAL CODES.

15. ANY REFERENCE TO A STANDARD IN THESE PLANS SHALL BE INTERPRETED TO MEAN THE EDITION AS INDICATED BY THE SUBNUMBER SHOWN IN THE LIST OF STANDARDS OR THE COPY INCLUDED IN THESE PLANS.

16. ELECTRICAL HANDHOLE COVER LEGEND SHALL BE "IDOT ITS".

17. ITS SYMBOLS ARE OVERSIZED ON THE PLANS FOR CLARITY. CONTRACTOR SHALL USE STATIONS AND OFFSETS TO ACCURATELY LOCATE EQUIPMENT.

BILL OF MATERIALS

ITEM	DESCRIPTION	UNIT	QTY	IDOT QTY*	THIRD PARTY QTY*
81028240	UNDERGROUND CONDUIT, GALVANIZED STEEL, 4" DIA.	FOOT	1,778	1409	369
81028750	UNDERGROUND CONDUIT, COILABLE NONMETALLIC CONDUIT, 2" DIA.	FOOT	2,722	-	-
81400200	HEAVY-DUTY HANDHOLE	EACH	9	-	-
X0326949	CLOSED CIRCUIT TELEVISION CAMERA STRUCTURE FOUNDATION, 30" DIAMETER	FOOT	27	-	-
X8101102	UNDERGROUND CONDUIT, MULTI-DUCT, 7-18MM MICRODUCTS	FOOT	12,713	8159	4554
X8710318	FIBER OPTIC UTILITY MARKER	EACH	22	-	-
X8710402	FIBER OPTIC INNERDUCT 1 1/4" DIA.	FOOT	1,687	-	-
X8780107	CONCRETE FOUNDATION (SPECIAL)	FOOT	9	-	-
Z0033052	COMMUNICATIONS VAULT	EACH	17	11	6
	TRACER WIRE, NO. 12	FOOT	1,825	-	-

*THESE COLUMNS ARE NOT ADDITIONAL QUANTITY. THEY PROVIDE THE QUANTITY SPLIT BETWEEN IDOT AND THIRD PARTY FOR THE ITEMS LISTED.

COMM VAULT (IDOT) (E)
STA. 632+00, 127' LT
[CMV-IE-WB-31G]

W PARK FRONT ST.

EXIST R.O.W.

PR R.O.W.

EXIST R.O.W.

700' MICRODUCT (IDOT) (I)

FO

WB I-80

625+00 626 627 628 629 630+00 631 632 633 634 635+00 636 637 638

EB I-80

PR ℄ I-80

MATCHLINE STA. 639+00.00

COMM VAULT (IDOT) (E)
STA. 634+40, 107' RT
[CMV-IE-EB-31F]

460' MICRODUCT (IDOT) (I)
460' MICRODUCT (THIRD PARTY) (I)

EXIST R.O.W.

EXIST R.O.W.

BEGIN IMPROVEMENT
STA 632+00.00

COMM VAULT (THIRD PARTY) (E)
STA. 634+40, 114' RT
[CMV-IE-TP-31G]

BEGIN PROJECT
STA 634+50.00

MATCHLINE
SEE CONTRACT NO. 62R89

N

0 50 100 150
SCALE IN FEET

KEY PLAN

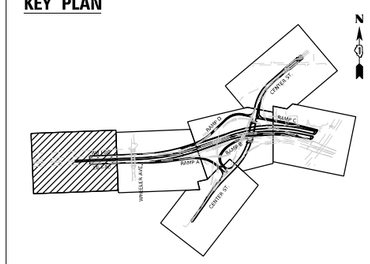

MODEL: Default
FILE NAME: pw://transystems-pw.bentley.com:transyscorp-pw1-hosted/Documents/Projects_2018/CH401/401180022/03-WSP/CAD/62R22-INT-4 (Center)/Sheet:ITS/D162R22-ah-its-03.dgn

ATLAS
ATLAS TECHNICAL CONSULTANTS, LLC
100 S. WACKER DRIVE, SUITE 400
CHICAGO, IL 60606

USER NAME = jmalcolm	DESIGNED - DJM	REVISED -	
	DRAWN - JNR	REVISED -	
PLOT SCALE = 100.000 ' / in.	CHECKED - REL	REVISED -	
PLOT DATE = 4/22/2025	DATE - 4/25/2025	REVISED -	

STATE OF ILLINOIS
DEPARTMENT OF TRANSPORTATION

PROPOSED ITS INFRASTRUCTURE PLAN
I–80

SCALE: 1'=50" | SHEET 3 OF 12 SHEETS | STA. TO STA.

F.A.I. RTE.	SECTION	COUNTY	TOTAL SHEETS	SHEET NO.
80	FAI 80 21 INTERCHANGE	WILL	1209	609
		CONTRACT NO. 62R22		
	ILLINOIS	FED. AID PROJECT		

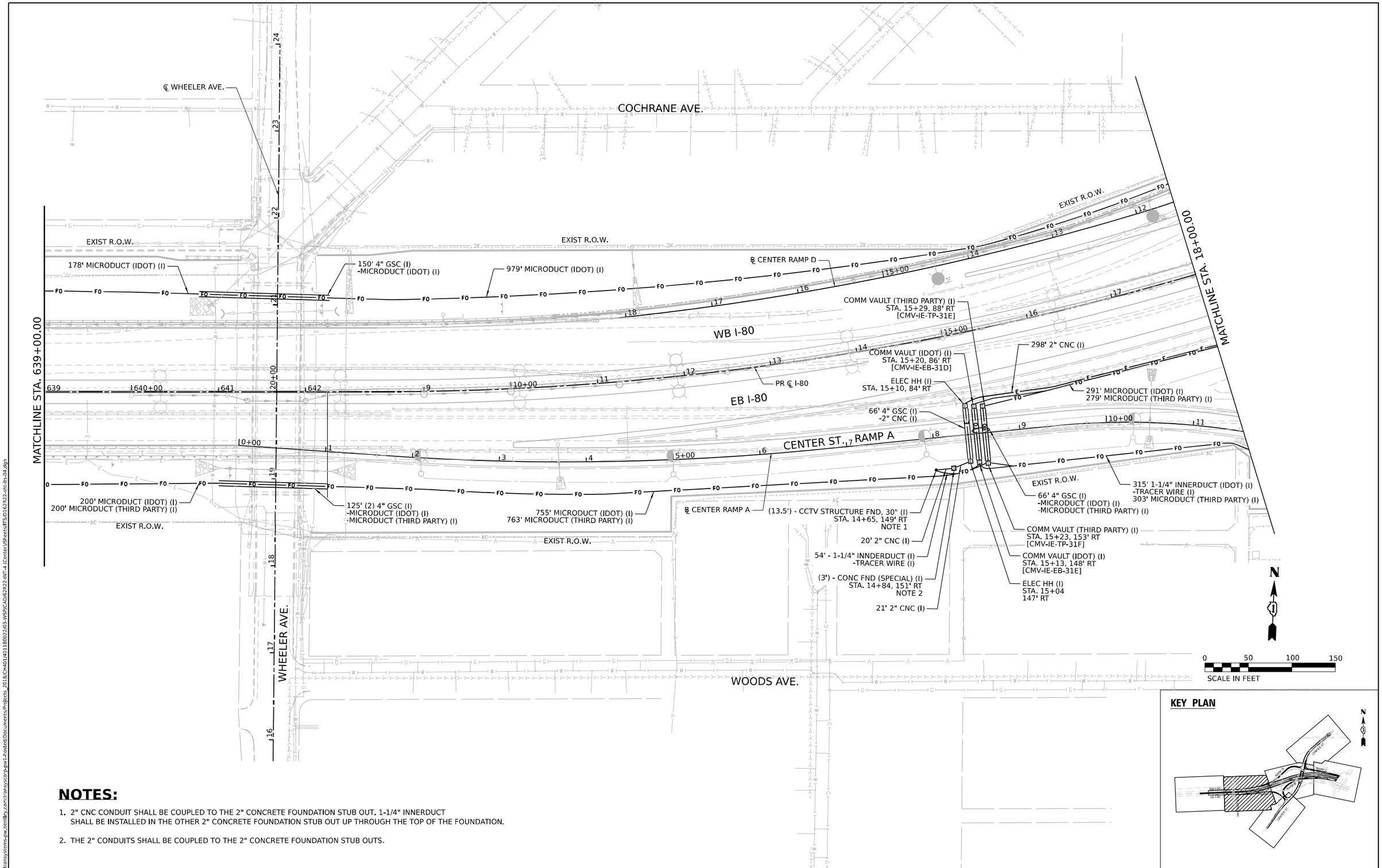

NOTES:

1. 2" CNC CONDUIT SHALL BE COUPLED TO THE 2" CONCRETE FOUNDATION STUB OUT. 1-1/4" INNERDUCT SHALL BE INSTALLED IN THE OTHER 2" CONCRETE FOUNDATION STUB OUT UP THROUGH THE TOP OF THE FOUNDATION.

2. THE 2" CONDUITS SHALL BE COUPLED TO THE 2" CONCRETE FOUNDATION STUB OUTS.

MODEL: Default
FILE NAME: pw://transystems-pw.bentley.com:transyscorp-pw1-hosted/Documents/Projects - 2018/CH401/401180022/03-WSP/CAD/62R22-INT-4 (Center)/Sheets/ITS/D162R22-ITI-ITS-04.dgn

ATLAS TECHNICAL CONSULTANTS, LLC
100 S. WACKER DRIVE, SUITE 400
CHICAGO, IL 60606

USER NAME = jmalcolm	DESIGNED - DJM	REVISED -	
	DRAWN - JNR	REVISED -	
PLOT SCALE = 100.000 ' / in.	CHECKED - REL	REVISED -	
PLOT DATE = 4/22/2025	DATE - 4/25/2025	REVISED -	

STATE OF ILLINOIS
DEPARTMENT OF TRANSPORTATION

PROPOSED ITS INFRASTRUCTURE PLAN
I-80

SCALE: 1'=50" | SHEET 4 OF 12 SHEETS | STA. | TO STA.

F.A.I. RTE.	SECTION	COUNTY	TOTAL SHEETS	SHEET NO.
80	FAI 80 21 INTERCHANGE	WILL	1209	610
		CONTRACT NO. 62R22		
		ILLINOIS	FED. AID PROJECT	

712' 1-1/4" INNERDUCT (IDOT) (I)
-TRACER WIRE (I)
℄ CENTER RAMP D
LIGHTING CONTROLLER 'X'
L0765
41' 2" CNC (I)
MATCHLINE STA. 33+00.00
ELEC HH (I)
STA. 27+52
306' LT
79' 4" GSC (I)
2" CNC (I)
177' - 4" GSC (I)
-2" CNC (I)
ELEC HH (I)
STA. 29+34
256' LT
COMM VAULT (IDOT) (I)
STA. 29+32, 248' LT
[CMV-IE-WB-31C]
194' MICRODUCT (IDOT) (I)
196' 2" CNC (I)
COMM VAULT (IDOT) (I)
STA. 21+77, 219' LT
[CMV-IE-WB-31F]
139' 4" GSC (I)
-MICRODUCT (IDOT) (I)
395' MICRODUCT (IDOT) (I)
CENTER ST. RAMP D
CENTER ST. RAMP C
COCHRANE AVE.
EXIST R.O.W.
EXIST A.C.
(3') - CONCRETE FOUNDATION
(SPECIAL) (I)
STA. 24+36, 103' LT
NOTE 2
38' 2" CNC (I)
(13.5') - CCTV STRUCTURE FND, 30" (I)
STA. 24+00, 103' LT
NOTE 1
170' - 1-1/4" INNERDUCT (I)
-TRACER WIRE (I)
512' MICRODUCT (IDOT) (I)
94' 2" CNC (I)
COMM VAULT (IDOT) (I)
STA. 22+35, 92' LT
[CMV-IE-WB-31E]
ELEC HH (I)
STA. 25+25
108' LT
110' 4" GSC (I)
-MICRODUCT (IDOT) (I)
260' 2" CNC (I)
141' - 4" GSC (I)
MICRODUCT (IDOT) (I)
℄ CENTER
RAMP C
178' 4" GSC (I)
-2" CNC (I)
67' MICRODUCT
(IDOT) (I)
COMM VAULT (IDOT) (I)
STA. 28+97, 111' LT
[CMV-IE-WB-31D]
WB I-80
EB I-80
PR ℄ I-80
ELEC HH (I)
STA. 25+25, 70' RT
MATCHLINE STA. 18+00.00
MATCHLINE STA. 31+00.00
NOTE 3
CENTER ST. RAMP B
253' 2" CNC (I)
ELEC HH (I)
STA. 20+50
82' RT
470' 2" CNC (I)
600' MICRODUCT (IDOT) (I)
608' MICRODUCT (THIRD PARTY) (I)
219' MICRODUCT (IDOT) (I)
210' MICRODUCT (THIRD PARTY) (I)
COMM VAULT (THIRD PARTY) (I)
STA. 24+11, 88' RT
[CMV-IE-TP-31C]
324' MICRODUCT (IDOT) (I)
324' MICRODUCT (THIRD PARTY) (I)
110' (2) 4" GSC (I)
-MICRODUCT (IDOT) (I)
-MICRODUCT (THIRD PARTY) (I)
COMM VAULT (IDOT) (I)
STA. 24+01, 90' RT
[CMV-IE-EB-31C]
℄ CENTER RAMP B
68' (2) 4" GSC (I)
-MICRODUCT (IDOT) (I)
-MICRODUCT (THIRD PARTY) (I)
COMM VAULT (THIRD PARTY) (I)
STA. 24+26, 151' RT
[CMV-IE-TP-31B]
CENTER ST.
COMM VAULT (IDOT) (I)
STA. 24+16, 156' RT
[CMV-IE-EB-31B]
℄ CENTER RAMP A
℄ CENTER STREET
CENTER ST. RAMP A
PR R.O.W.
EXIST R.O.W.
316' 1-1/4" INNERDUCT (IDOT) (I)
-TRACER WIRE (I)
316' MICRODUCT (THIRD PARTY) (I)
S RAYNOR AVE.
EXIST A.C.
MATCHLINE STA. 15+00.00
MATCHLINE STA. 1+50.00
MATCHLINE STA. 23+00.00
N
0 50 100 150
SCALE IN FEET

KEY PLAN

NOTES:

1. 2" CNC CONDUIT SHALL BE COUPLED TO THE 2" CONCRETE FOUNDATION STUB OUT. 1-1/4" INNERDUCT SHALL BE INSTALLED IN THE OTHER 2" CONCRETE FOUNDATION STUB OUT UP THROUGH THE TOP OF THE FOUNDATION.
2. THE 2" CONDUITS SHALL BE COUPLED TO THE 2" CONCRETE FOUNDATION STUB OUTS.
3. MAINTAIN A MINIMUM 5' BETWEEN SIGN POST FOUNDATION AND CONDUIT/MICRODUCT.

MODEL: Default
FILE NAME: pw://transystems-pw.bentley.com:transyscorp-pw1-hosted/Documents/Projects_2018/CH401/401180022/03-WSP/CAD/62R22-INT-4 (Center)/Sheets/ITS/0162R22-IN-ITS-05.dgn

ATLAS TECHNICAL CONSULTANTS, LLC
100 S. WACKER DRIVE, SUITE 400
CHICAGO, IL 60606

USER NAME = jmalcolm	DESIGNED - DJM	REVISED -	
	DRAWN - JNR	REVISED -	
PLOT SCALE = 100.000 ' / in.	CHECKED - REL	REVISED -	
PLOT DATE = 4/25/2025	DATE - 4/25/2025	REVISED -	

STATE OF ILLINOIS
DEPARTMENT OF TRANSPORTATION

PROPOSED ITS INFRASTRUCTURE PLAN
I-80

SCALE: 1'=50' | SHEET 5 OF 12 SHEETS | STA. | TO STA.

F.A.I. RTE.	SECTION	COUNTY	TOTAL SHEETS	SHEET NO.
80	FAI 80 21 INTERCHANGE	WILL	1209	611
		CONTRACT NO. 62R22		
	ILLINOIS	FED. AID PROJECT		

512' MICRODUCT (IDOT) (I)
248'
2" CNC (I)
ELEC HH (I)
STA. 35+33
187' LT
COMM VAULT (IDOT) (I)
STA. 35+42, 184' LT
[CMV-IE-WB-31B]
ILLINOIS ST.
MARKET ST.
CHERRY ST.
EXIST R.O.W.
CSX RAILROAD
US 6/ RAILROAD ST.
PR R.O.W.
EXIST R.O.W.
PR R.O.W.
27' 2" CNC (I)
(3') - CONC FND (SPECIAL) (I)
STA. 35+58, 188' LT
256' 2" CNC (I)
80' CCTV STRUCTURE FND
(BY OTHERS)
NOTE 1
325' MICRODUCT (IDOT) (I)
ELEC HH (I)
STA. 33+36
162' LT
COMM VAULT (IDOT) (I)
STA. 38+31, 137' LT
[CMV-IE-WB-31A]
℄ CENTER RAMP C
CENTER ST. RAMP C
NOTE 2 & 3
WB I-80
END PROJECT
END IMPROVEMENT
STA. 37+89.00
I-80 OVER DES PLAINES RIVER BRIDGE
SEE CONTRACT 62R23
PR ℄ I-80
EB I-80
MATCHLINE STA. 31+00.00
CENTER ST. RAMP B
NOTE 4
NOTE 4
NOTE 2 & 3
COMM VAULT (IDOT) (I)
STA. 37+23, 103' RT
[CMV-IE-EB-31A]
624' MICRODUCT (IDOT) (I)
632' MICRODUCT (THIRD PARTY) (I)
COMM VAULT (THIRD PARTY) (I)
STA. 37+32, 105' RT
[CMV-IE-TP-31A]
EXIST R.O.W.
CSX RAILROAD
US 6/ RAILROAD ST.
DES PLAINES RIVER
N
0 50 100 150
SCALE IN FEET

KEY PLAN

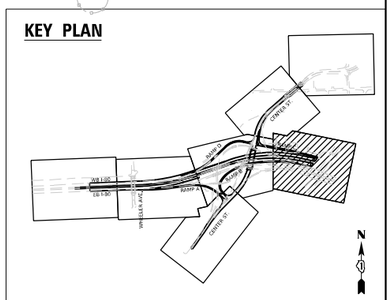

NOTES:

1. THIS FOUNDATION IS SHOWN FOR REFERENCE ONLY AND SHALL BE INSTALLED AS PART OF A FUTURE CONTRACT.
2. CONDUIT TO BE INSTALLED BY OTHERS (62R23).
3. MICRODUCT TO BE INSTALLED BY CONTRACT 62R23.
4. MAINTAIN A MINIMUM 5' BETWEEN SIGN POST FOUNDATION AND MICRODUCT.

MODEL: Default
FILE NAME: pw://transystems-pw.bentley.com:transyscorp-pw1-hosted/Documents/Projects_2018/CH401/401180022/03-WSP/CAD/62R22-INT-4 (Center)/Sheet:ITS/D162R22-sht-its-06.dgn

ATLAS
ATLAS TECHNICAL CONSULTANTS, LLC
100 S. WACKER DRIVE, SUITE 400
CHICAGO, IL 60606

USER NAME = dmeier	DESIGNED - DJM	REVISED -	
	DRAWN - JNR	REVISED -	
PLOT SCALE = 100.000 ' / in.	CHECKED - REL	REVISED -	
PLOT DATE = 6/11/2025	DATE - 6/11/2025	REVISED -	

STATE OF ILLINOIS
DEPARTMENT OF TRANSPORTATION

PROPOSED ITS INFRASTRUCTURE PLAN
I-80

SCALE: 1'=50" | SHEET 6 OF 12 SHEETS | STA. | TO STA.

F.A.I. RTE.	SECTION	COUNTY	TOTAL SHEETS	SHEET NO.
80	FAI 80 21 INTERCHANGE	WILL	1209	612
		CONTRACT NO. 62R22		
	ILLINOIS	FED. AID PROJECT		

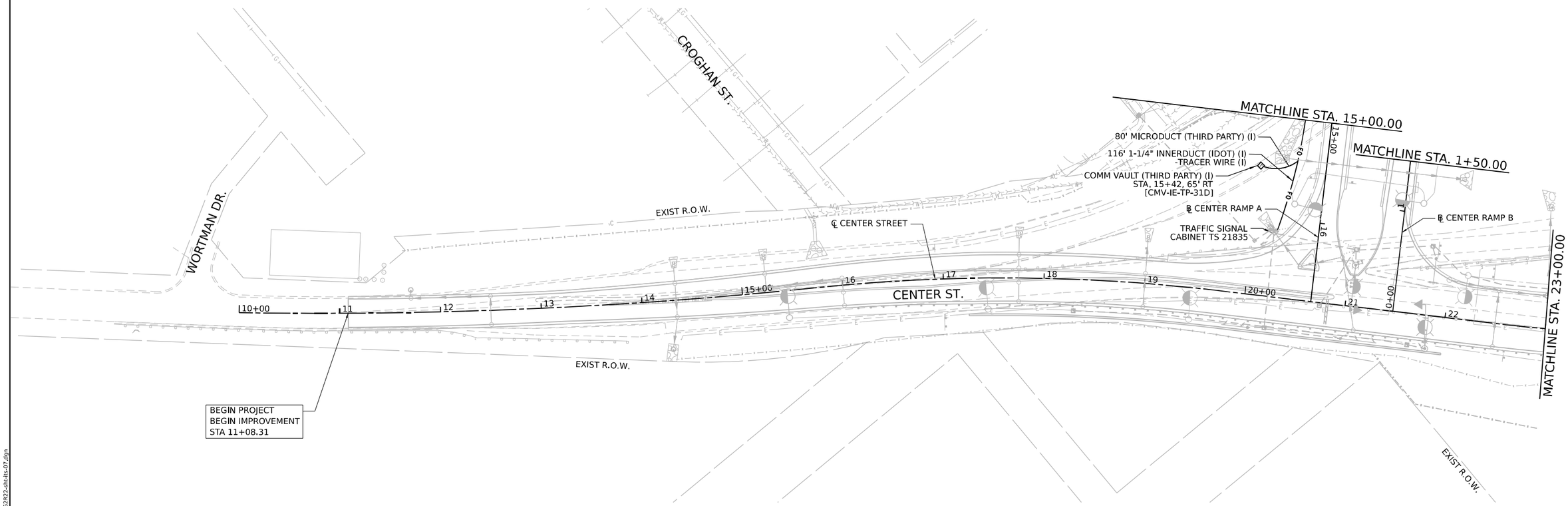

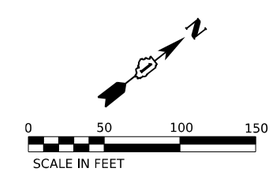

KEY PLAN

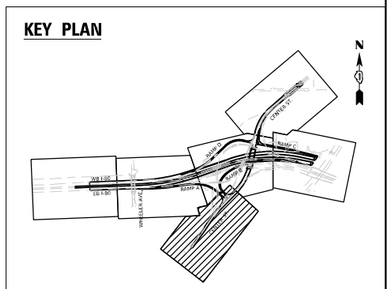

MODEL: Default
FILE NAME: pw://transystems-pw.bentley.com:transyscorp-pw1-hosted/Documents/Projects_2018/CH401/401180022/03-WSP/CAD/62R22-INT-4 (Center)/Sheets/ITS/D162R22-ITS-07.dgn

ATLAS TECHNICAL CONSULTANTS, LLC
100 S. WACKER DRIVE, SUITE 400
CHICAGO, IL 60606

USER NAME = jmalcolm	DESIGNED - DJM	REVISED -	
	DRAWN - JNR	REVISED -	
PLOT SCALE = 100.000 ' / in.	CHECKED - REL	REVISED -	
PLOT DATE = 4/22/2025	DATE - 4/25/2025	REVISED -	

STATE OF ILLINOIS
DEPARTMENT OF TRANSPORTATION

PROPOSED ITS INFRASTRUCTURE PLAN
CENTER STREET

SCALE: 1'=50" | SHEET 7 OF 12 SHEETS | STA. TO STA.

F.A.I. RTE.	SECTION	COUNTY	TOTAL SHEETS	SHEET NO.
80	FAI 80 21 INTERCHANGE	WILL	1209	613
		CONTRACT NO. 62R22		
	ILLINOIS	FED. AID PROJECT		

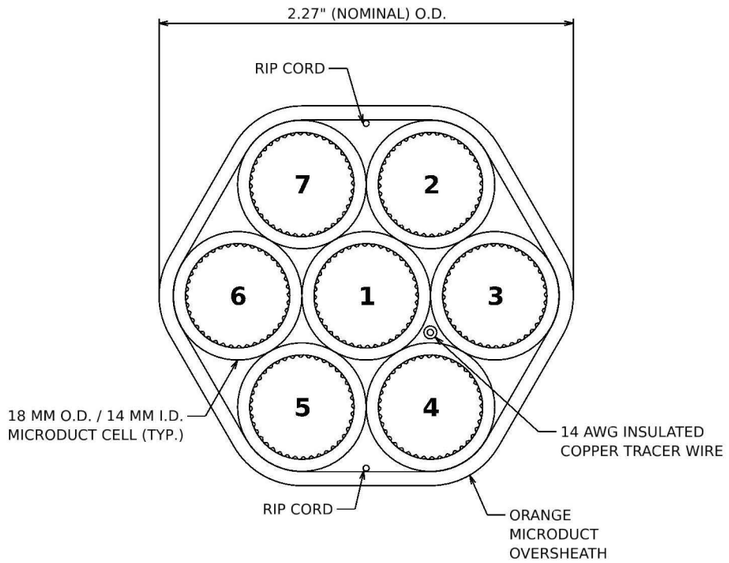

IDOT MICRODUCT DETAIL

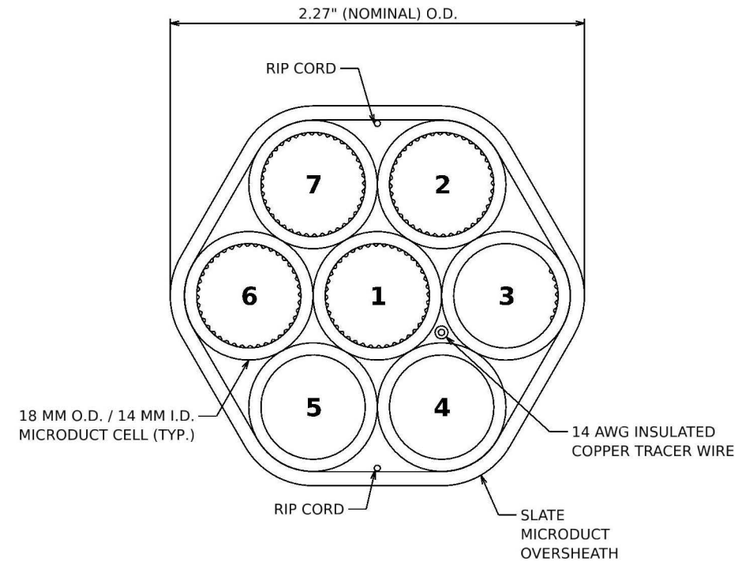

THIRD PARTY MICRODUCT DETAIL

CELL NO.	CELL COLOR	CELL ALLOCATION
1	BLUE	FUTURE 144 IDOT (TCF)
2	ORANGE	FUTURE 144 IDOT (DCF)
3	GREEN	SPARE
4	BROWN	SPARE
5	GREY	SPARE
6	WHITE	SPARE
7	RED	SPARE

IDOT MICRODUCT CELL INFORMATION

CELL NO.	CELL COLOR	CELL ALLOCATION
1	BLUE	FUTURE 144 THIRD PARTY
2	ORANGE	SPARE
3	GREEN	SPARE
4	BROWN	SPARE
5	GREY	SPARE
6	WHITE	SPARE
7	RED	SPARE

THIRD PARTY MICRODUCT CELL INFORMATION

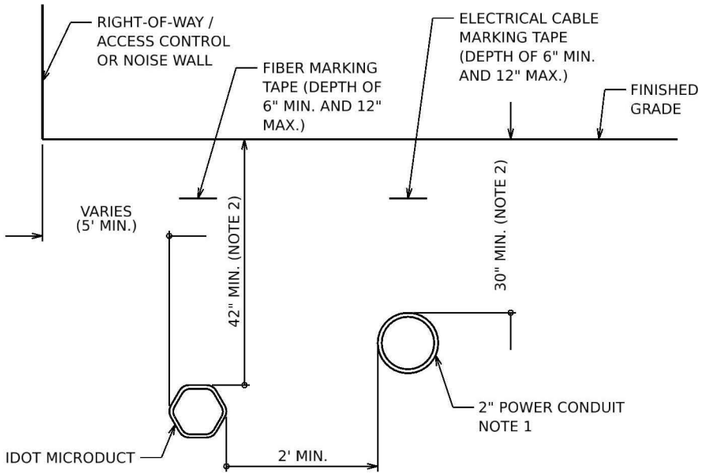

I-80 WESTBOUND
TYPICAL CONDUIT SECTION

NOTES

1. INSTALLATION CONFIGURATION/QUANTITY OF POWER CONDUITS VARIES BY LOCATION.
2. GREATER DEPTH MAY BE REQUIRED IN CERTAIN SITUATIONS, INCLUDING, BUT NOT LIMITED TO: ENTERING HANDHOLES/VAULTS, UTILITY AVOIDANCE, CROSSING BENEATH BOX CULVERTS AND FLOW LINES OF DITCHES.

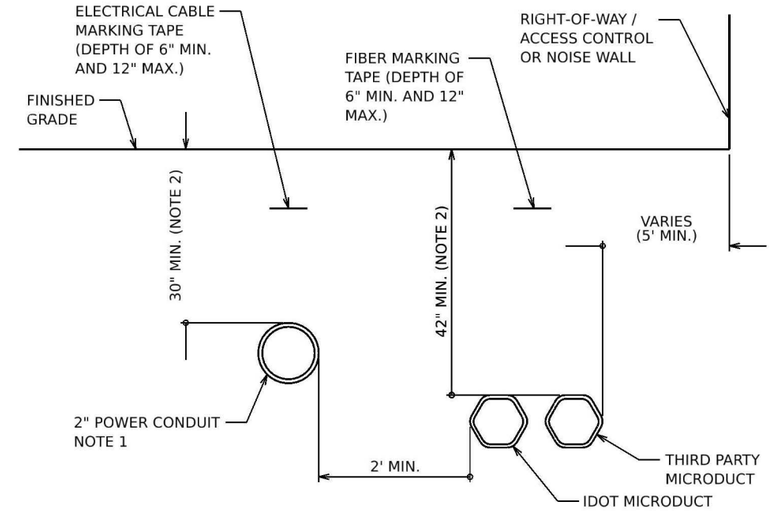

I-80 EASTBOUND
TYPICAL CONDUIT SECTION

NOTES

1. INSTALLATION CONFIGURATION/QUANTITY OF POWER CONDUITS VARIES BY LOCATION.
2. GREATER DEPTH MAY BE REQUIRED IN CERTAIN SITUATIONS, INCLUDING, BUT NOT LIMITED TO: ENTERING HANDHOLES/VAULTS, UTILITY AVOIDANCE, CROSSING BENEATH BOX CULVERTS AND FLOW LINES OF DITCHES..

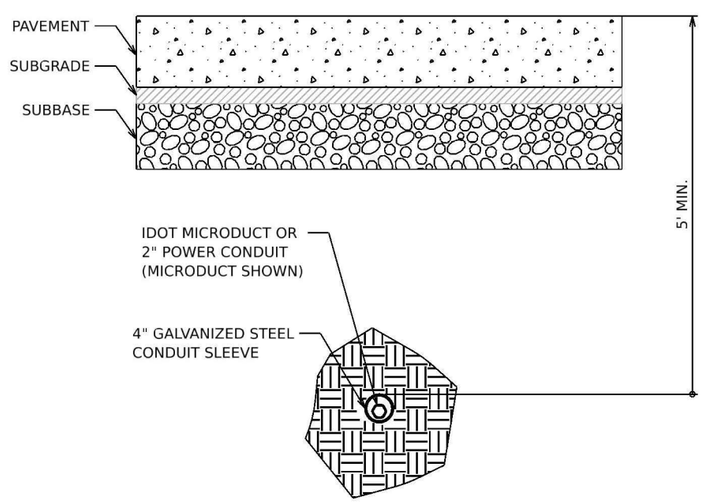

BORED CONDUIT UNDER ROADWAY

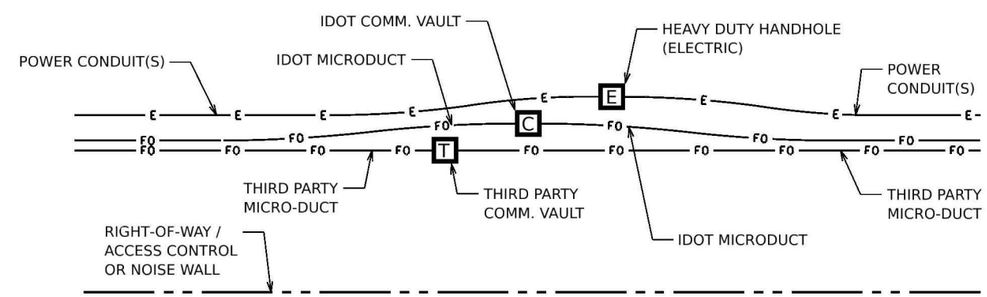

TYPICAL CONDUIT ROUTING AT HANDHOLES

NOTES

1. INSTALLATION CONFIGURATION/QUANTITY OF POWER CONDUITS VARIES BY LOCATION AND ROADWAY DIRECTION. EASTBOUND DIRECTION SHOWN ABOVE WITH POWER CONDUIT, IDOT MICRODUCT, AND THIRD PARTY MICRODUCT.
2. IDOT MICRODUCT SHALL ENTER IDOT COMMUNICATIONS VAULTS ONLY.
3. THIRD PARTY MICRODUCT SHALL ENTER THIRD PARTY COMMUNICATIONS VAULTS ONLY.

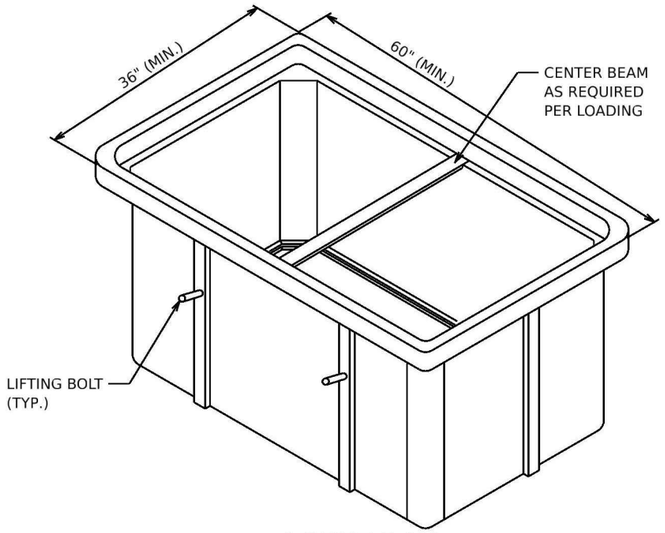

VAULT BOX
ISOMETRIC VIEW

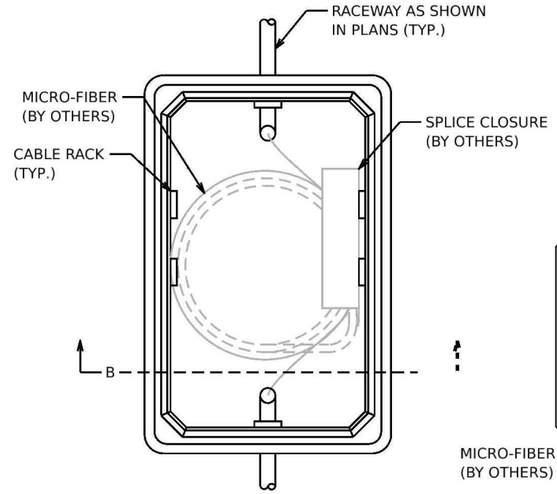

TOP VIEW

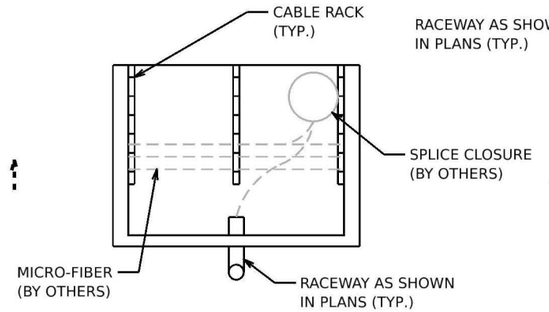

SECTION B-B

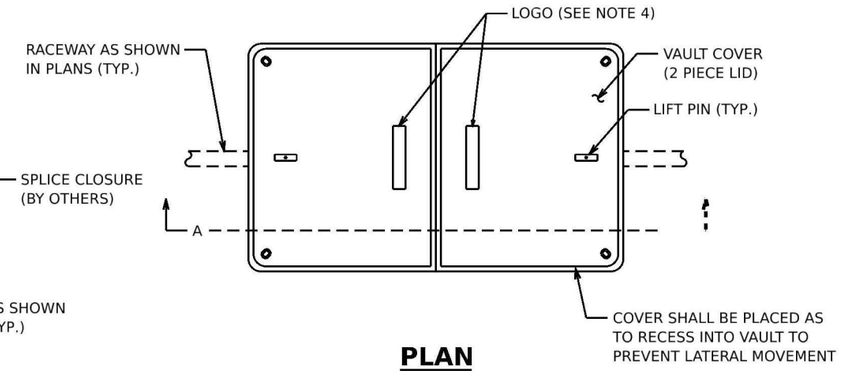

PLAN

NOTES:

1. GROUND ROD, 1-1/2" CONDUIT, #6 AWG GROUND WIRE, LOCATE POST AND ASSOCIATED WORK ARE INCLUDED AS PART OF COMMUNICATIONS VAULT AND WILL NOT BE PAID FOR SEPARATELY. ALL MATERIALS FOR MECHANICAL CONNECTION SHALL BE UL LISTED AND INSTALLED PER NEC ARTICLE 250.

2. #14 AWG TRACER CABLE SHALL BE SPLICED TO THE #14 AWG TRACER CABLE IN THE MICRODUCT USING A WATERPROOF SPLICE KIT AS RECOMENDED BY THE MICRODUCT MANUFACTURER. THE #14 AWG WIRE, SPLICE KIT AND ASSOCIATED WORK ARE INCLUDED AS PART OF COMMUNICATIONS VAULT AND WILL NOT BE PAID FOR SEPARATELY.

3. A WATERPROOF MICRODUCT PLUG(S) OR INNERDUCT PLUG SHALL BE INSTALLED AROUND EACH MICRODUCT OR INNERDUCT TO SEAL AROUND THE DUCT FOR ALL MICRODUCTS OR INNERDUCTS COMING INTO THE VAULT. THE PLUGS SHALL BE APPROPRIATELY SIZED AND INSTALLED AS RECOMMENDED BY THE MANUFACTURER AND IS INCLUDED AS PART OF THE MICRODUCT OR INNERDUCT PAY ITEM AND WILL NOT BE PAID SEPARATELY.

4. IDOT COMMUNICATIONS VAULTS SHALL HAVE A PERMANENTLY RECESSED LOGO THAT READS "IDOT" AND THIRD PARTY COMMUNICATIONS VAULTS SHALL HAVE A PERMANENTLY RECESSED LOGO THAT READS "IDOT - DoIT".

5. COMMUNICATIONS VAULT SHALL HAVE AN OPEN BASE. ALL CONDUITS AS SHOWN ON THE PLANS SHALL ENTER THE VAULT VIA THE OPEN BASE.

6. ALL DIMENSIONS ARE MINIMUM AND A LARGER SIZE VAULT MAY BE USED, WITH THE APPROVAL OF THE ENGINEER, TO FACILITATE USING A MANUFACTURER'S STANDARD PRODUCT.

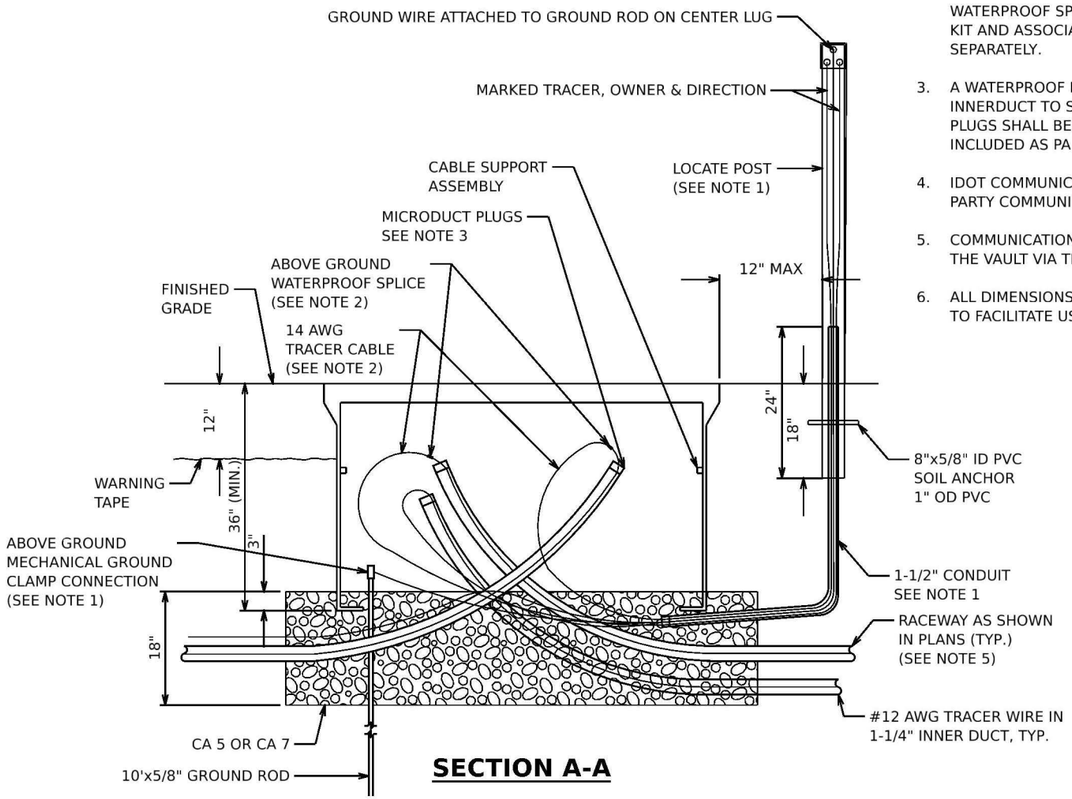

SECTION A-A

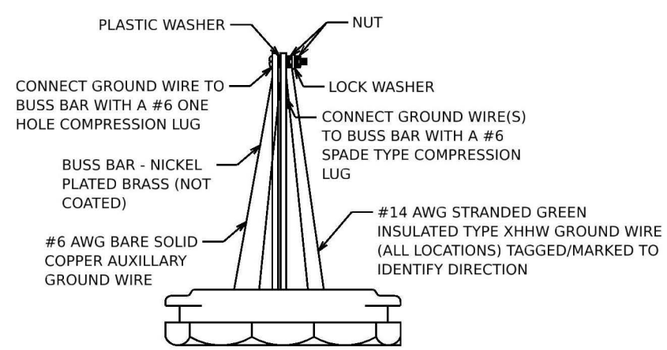

LOCATE POST TOP HAT BOND PLATE
N.T.S.

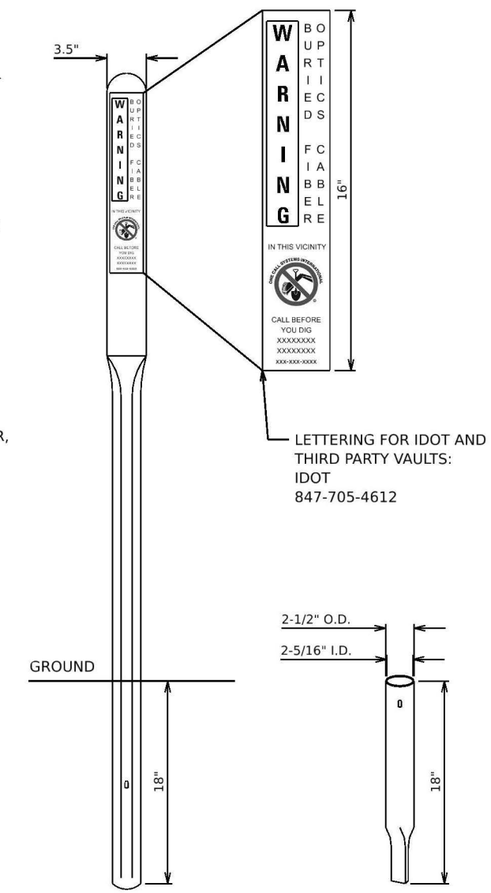

POST

SOIL ANCHOR

MODEL: general
FILE NAME: pw://transystems-pw.bentley.com:transyscorp-pw1-hosted/Documents/Projects_2018/CH401/401180022/03-WSP/CAD/62R22-INT-4 (Center)/Sheets/ITS/D162R22-sht-its-10.dgn

ATLAS
ATLAS TECHNICAL CONSULTANTS, LLC
100 S. WACKER DRIVE, SUITE 400
CHICAGO, IL 60606

USER NAME = jmalcolm	DESIGNED - DJM	REVISED -	
	DRAWN - JNR	REVISED -	
PLOT SCALE = 100.000 ' / in.	CHECKED - REL	REVISED -	
PLOT DATE = 4/25/2025	DATE - 4/25/2025	REVISED -	

STATE OF ILLINOIS
DEPARTMENT OF TRANSPORTATION

ITS INFRASTRUCTURE DETAILS
COMMUNICATIONS VAULT

SCALE: | SHEET 10 OF 12 SHEETS | STA. | TO STA.

F.A.I. RTE.	SECTION	COUNTY	TOTAL SHEETS	SHEET NO.
80	FAI 80 21 INTERCHANGE	WILL	1209	616
		CONTRACT NO. 62R22		
		ILLINOIS	FED. AID PROJECT	

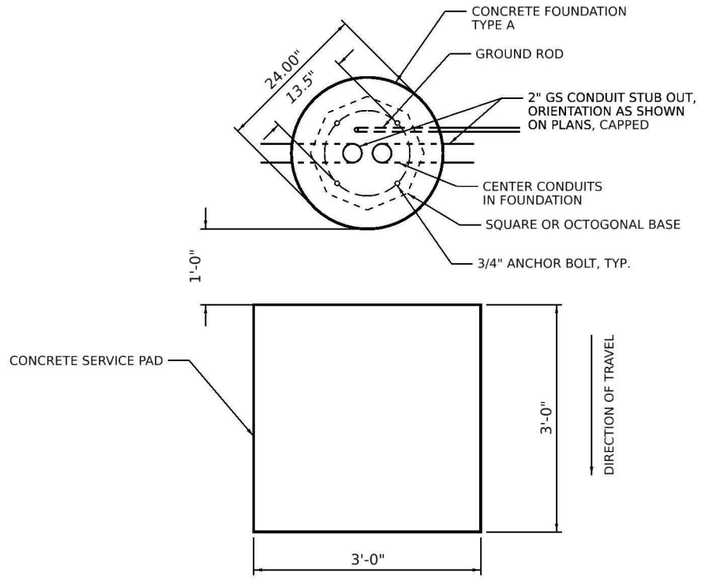

TOP VIEW PROPOSED CONCRETE FOUNDATION (SPECIAL)

N.T.S.

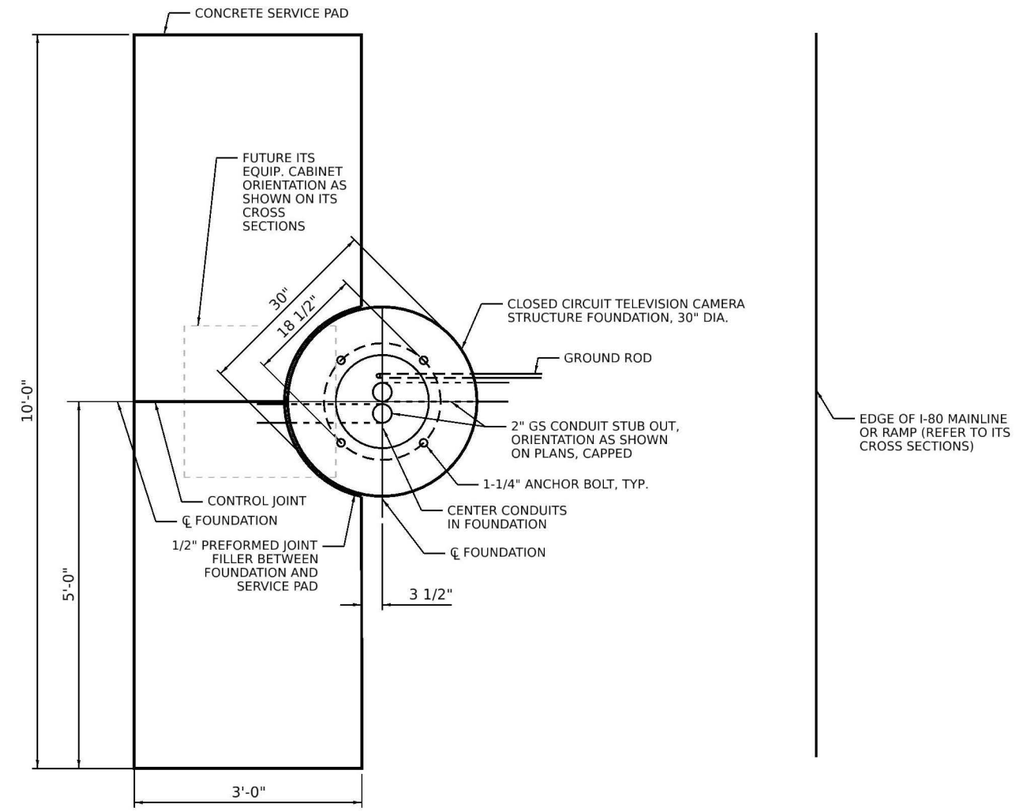

CLOSED CIRCUIT TELEVISION CAMERA STRUCTURE FOUNDATION, 30" DIA. PLAN VIEW

N.T.S.

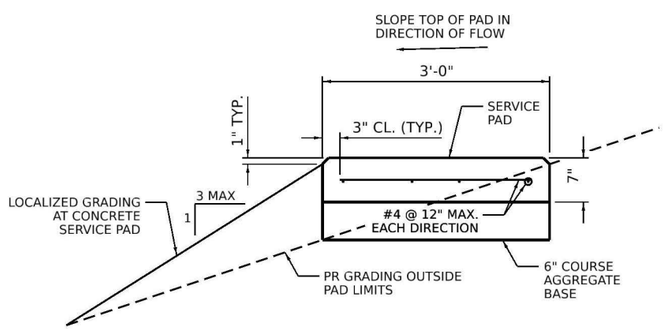

CONCRETE SERVICE PAD SECTION

N.T.S.

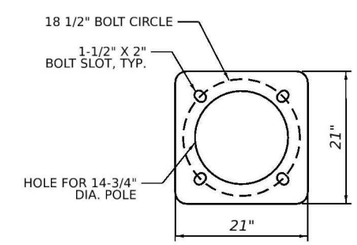

CCTV POLE BASE PLATE DETAIL 18-1/2" BOLT CIRCLE

N.T.S.

(SHOWN FOR REFERENCE ONLY)

NOTES

1. TOP VIEW FOR CONCRETE FOUNDATION (SPECIAL) AND CLOSED CIRCUIT TELEVISION CAMERA STRUCTURE FOUNDATION, 30" DIA. SHOWN ON THIS SHEET ARE FOR INFORMATION ONLY ON CONDUITS ENERTING FOUNDATION, SERVICE PAD, AND ANOCHOR BOLT CIRCLE DIMENSIONS REQUIRED. FOR FURTHER FOUNDATION DETAILS, SEE HIGHWAY STANDARD 878001-11 (CONCRETE FOUNDATION DETAILS).

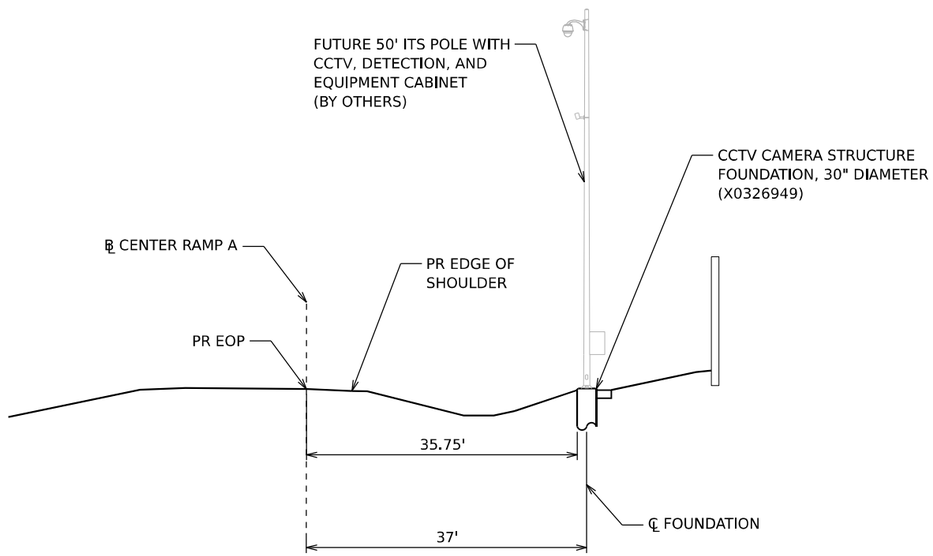

RAMP A, STA 8+00
(LOOKING EAST)
CLOSED CIRCUIT TELEVISION CAMERA STRUCTURE
FOUNDATION, 30" DIAMETER

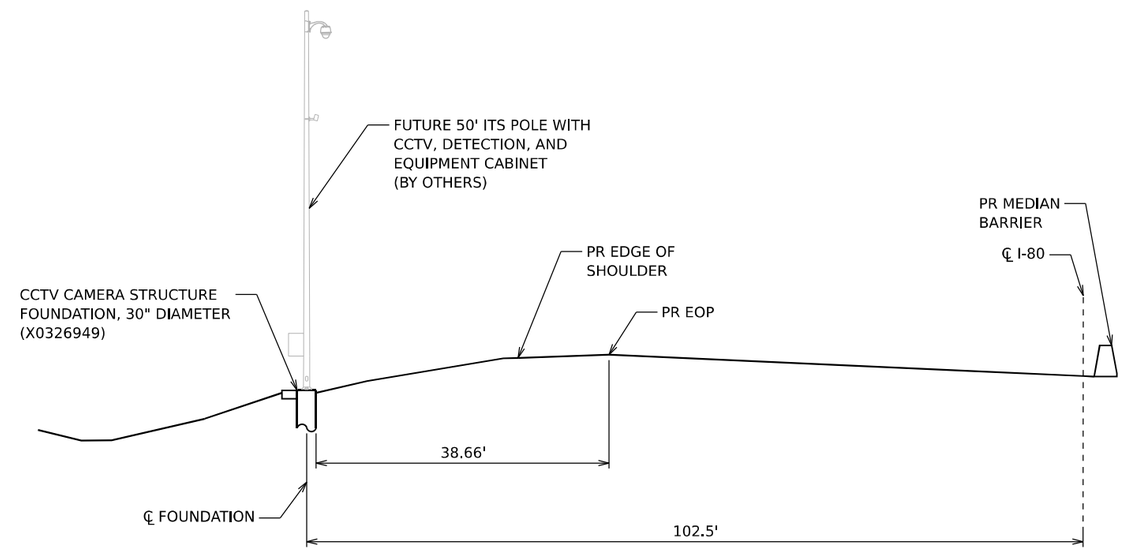

STA 24+00
(LOOKING EAST)
CLOSED CIRCUIT TELEVISION CAMERA STRUCTURE
FOUNDATION, 30" DIAMETER

MODEL: general
FILE NAME: pw://transystems-pw.bentley.com:transyscorp-pw1-hosted/Documents/Projects_2018/CH401/401180022/03-WSP/CAD/62R22-INT-4 (Center)/Sheets/ITS/D162R22-sht-its-12.dgn

exp.

USER NAME = jmalcolm	DESIGNED - XXX	REVISED -	
	DRAWN - XXX	REVISED -	
PLOT SCALE = 100.000 ' / in.	CHECKED - XXX	REVISED -	
PLOT DATE = 4/23/2025	DATE - 4/25/2025	REVISED -	

STATE OF ILLINOIS
DEPARTMENT OF TRANSPORTATION

ITS CROSS SECTIONS

SCALE: | SHEET 12 OF 12 SHEETS | STA. | TO STA.

F.A.I. RTE.	SECTION	COUNTY	TOTAL SHEETS	SHEET NO.
80	FAI 80 21 INTERCHANGE	WILL	1209	618
		CONTRACT NO. 62R22		
		ILLINOIS	FED. AID PROJECT	

Benchmark: Chiseled 'X' on top of SE bolt of Fire Hydrant at SE corner of Market St. and McDonough St.
Elev. 580.070

Existing Structure: S.N. 099-0186 is a 244'-9⅛" long back to back abutments, three span structure originally built in 1965. The existing structure consists of two multi-beam superstructures with noncomposite slabs with a 1" open longitudinal joint at the center, with an overall width of 64'-0". The existing stub abutments are founded on piles and the existing piers are founded on spread footings.

Traffic to be maintained utilizing stage construction.

No salvage.

DESIGN STRESSES

FIELD UNITS (New Construction)

f'c = 4,000 psi (Superstructure)
f'c = 3,500 psi (Substructure)
fy = 60,000 psi (Reinforcement)
fy = 50,000 psi (M270 Grade 50)

FIELD UNITS (Exist. Construction)

f'c = 3,500 psi
fy = 40,000 psi (substructure reinforcement)
fs = 20,000 psi (structural steel, ASTM A36)

DESIGN SPECIFICATIONS

2002 AASHTO Standard Specifications
for Highway Bridges, 17th Edition

SEISMIC DATA

Seismic Performance Category (SPC) = A
Bedrock Acceleration Coefficient (A) = 0.039g
Site Coefficient (S) = 1.0

LOADING HS20-44

Allow 25#/sq. ft. for future wearing surface.

SCOPE OF WORK

1. Remove the existing deck and approach slabs.
2. Remove portion of existing backwalls and wingwalls.
3. Convert the existing stub abutments to semi-integral abutments.
4. Perform structural repairs to the abutments and piers.
5. Replace the bearings at both abutments.
6. Replace both slopewalls.
7. Install shear studs.
8. Clean and paint the existing structural steel and bearings to remain.
9. Construct new composite deck, parapets, and precast approach slabs with 5" concrete wearing surface (without a longitudinal joint).
10. Replace fascia beams.
11. Replace fascia beam bearings at Pier 1 & Pier 2.

STATE OF ILLINOIS
PATRICK J. LAUX
081-007655
CHICAGO, ILLINOIS
LICENSED STRUCTURAL ENGINEER

Signed _____
PATRICK J. LAUX, S.E. Il. Lic. No. 081-007655
Expires 11-30-2026.

Date 4/25/2025

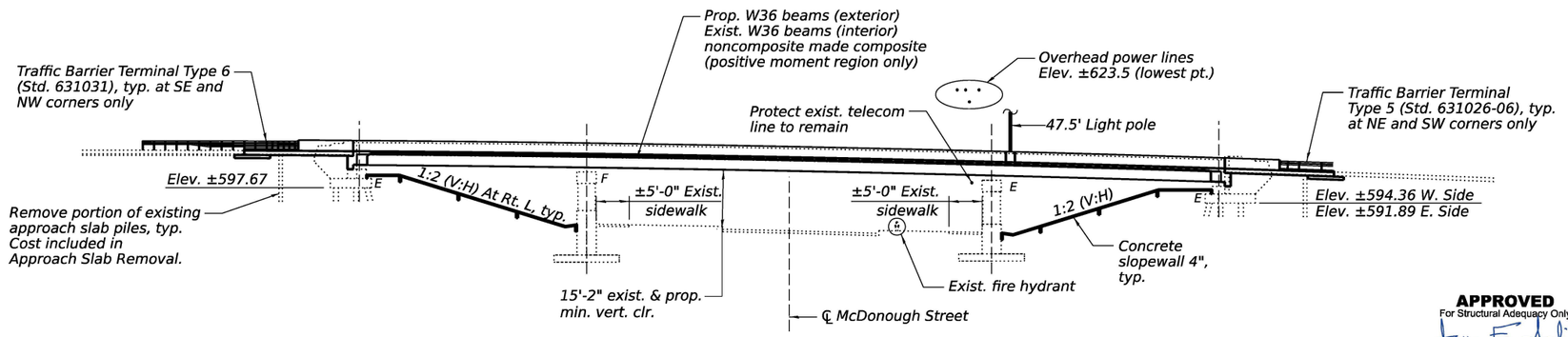

ELEVATION

APPROVED
For Structural Adequacy Only
Engineer of Bridges & Structures

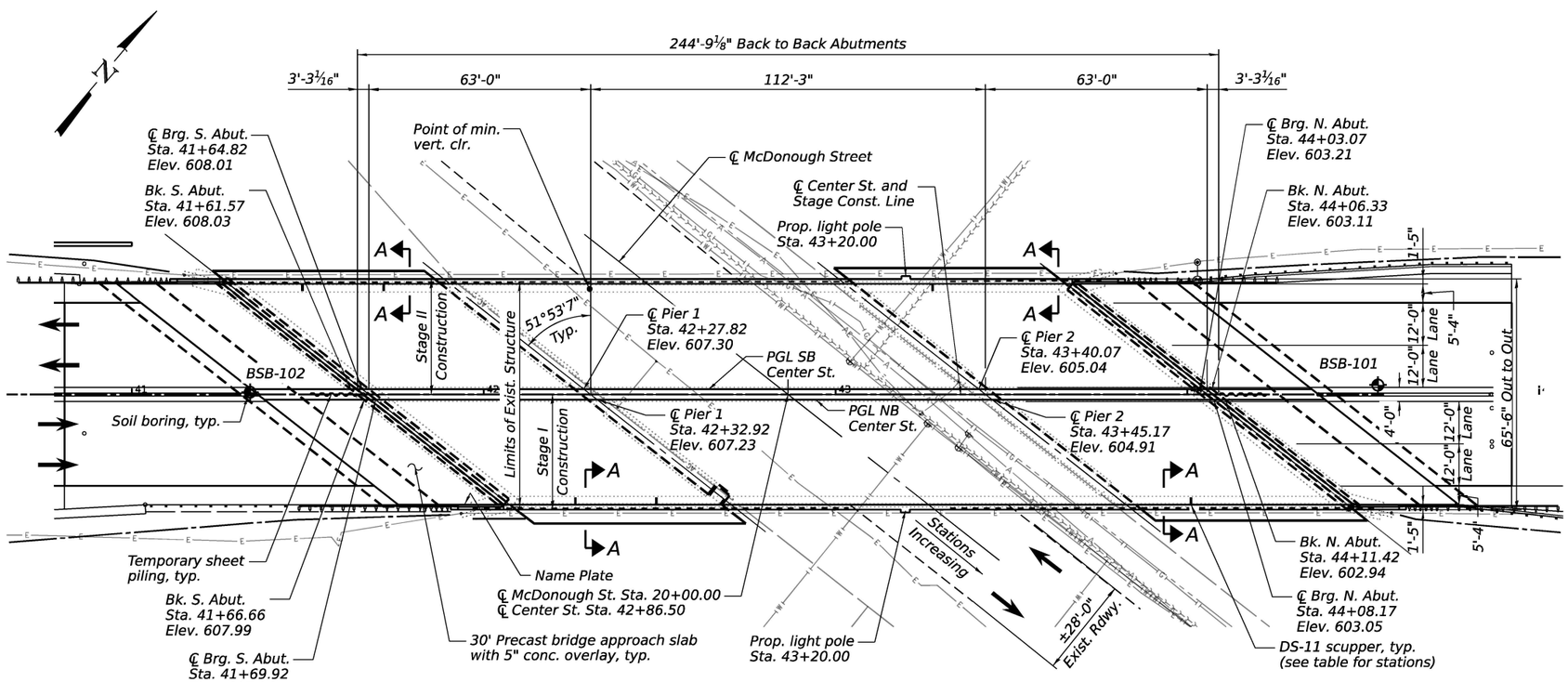

PLAN

Note:
See sheet SA-34 of SA-37 for Section A-A.

LEGEND

- Boring Location
- Temporary Soil Retention System
- Existing Aerial
- Existing ROW
- Existing ROW for Access Control
- Existing Sewer
- Existing Water Main
- Existing Gas Main
- Existing Underground Electric
- Existing Telephone

DS-11 SCUPPER STATIONS

Southbound Scuppers (Lt.)	Northbound Scuppers (Rt.)
Sta. 41+49.00	Sta. 42+26.00
Sta. 41+72.00	Sta. 42+49.00
Sta. 43+28.00	Sta. 44+01.00

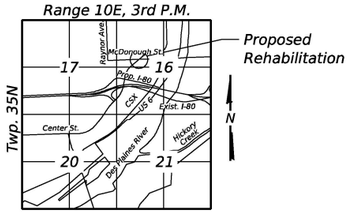

LOCATION SKETCH

GENERAL PLAN & ELEVATION
CENTER STREET OVER McDONOUGH STREET
F.A.U. RTE 316 - SEC. FAI 80 21 INTERCHANGE
WILL COUNTY
STA. 42+86.50
STRUCTURE NO. 099-0186

MODEL: Default
FILE NAME: pw://transystems-pw.bentley.com:transyscorp-pw1-hosted/Documents/Projects_2018/CH401/401180022/03-WSP/CAD/62R22-INT-4 (Center)/Sheets/Structural/SN-099-0186/0990186-62R22-SA-01-GPE01.dgn

WSP USA Inc.
30 N. LASALLE STREET
SUITE 4200
CHICAGO, IL 60602
TEL: (312) 782-8150
FAX: (312) 782-1684

USER NAME = USSJ696614	DESIGNED - MN	REVISED -	
	CHECKED - NBR	REVISED -	
PLOT SCALE = 40:0 ':" / in.	DRAWN - MN	REVISED -	
PLOT DATE = 4/22/2025	CHECKED - LAS	REVISED -	

STATE OF ILLINOIS
DEPARTMENT OF TRANSPORTATION

GENERAL PLAN AND ELEVATION
STRUCTURE NO. 099-0186

SHEET SA-1 OF SA-37 SHEETS

F.A.U RTE.	SECTION	COUNTY	TOTAL SHEETS	SHEET NO.
316	FAI 80 21 INTERCHANGE	WILL	1209	619
		CONTRACT NO. 62R22		
		ILLINOIS	FED. AID PROJECT	

GENERAL NOTES:

1. Fasteners shall be ASTM F3125 Grade A325 Type 1, mechanically galvanized bolts in painted areas. Bolts ⅞" diameter, holes $^{13}/_{16}$" diameter, unless otherwise noted.
2. Calculated weight of Structural Steel = 105,210 Pounds
3. All structural steel shall be AASHTO M270 Grade 50.
4. No field welding is permitted except as specified in the contract documents.
5. The Contractor shall test the existing welds by non-destructive methods within 2 ft. of the end of the existing cover plates for cracks after removal of the existing concrete deck. Dye penetrant (PT), magnetic particle (MT), or other approved testing method shall be performed by qualified personnel approved by the Engineer. If cracks are found, report them to the Bureau of Bridges and Structures for disposition. The cost of testing is included in Removal of Existing Concrete Deck. The cost of crack repair, if necessary, will be paid for according to Article 109.04 of the Standard Specifications.
6. Reinforcement bars designated (E) shall be epoxy coated.
7. Prior to pouring the new concrete deck, all heavy or loose rust, loose mill scale, and other loose or potentially detrimental foreign material shall be removed from the surfaces in contact with concrete (SSPC-SP3 standards). Tightly adhered paint may remain unless otherwise noted. Removal shall be accomplished by methods that will not damage the steel and the cost will be paid for according to Article 109.04 of the Standard Specifications. As directed by the Engineer, existing construction accessories welded to the top flange of beams and girders shall be removed. The weld areas shall be ground flush and inspected for cracks using magnetic particle testing (MT) or dye penetrant testing (PT) by qualified personnel approved by the Engineer. Any cracks that cannot be removed by grinding ¼ in. deep shall be identified and reported to the Bureau of Bridges and Structures for further disposition. The cost of removing welded accessories, grinding and inspecting weld areas and grinding cracks will be paid for according to Article 109.04 of the Standard Specifications.
8. The concrete for bridge decks finished according to Article 503.16(a) of the Standard Specifications shall be placed and compacted parallel to the skew in uniform increments along the centerline of the bridge. The machine used for finishing shall be set parallel to the skew for striking off and screeding the concrete.
9. Slipforming of the parapets is not allowed.
10. Plan dimensions and details relative to the existing structure have been taken from existing plans are subject to nominal construction variations. The Contractor shall field verify existing dimensions and details affecting new construction and make necessary approved adjustments prior to construction or ordering of materials. Such variations shall not be cause for additional compensation for a change in scope of the work, however, the Contractor will be paid for the quantity actually furnished at the unit price bid for the work.
11. The existing structural steel coating contains lead. The Contractor shall take appropriate precautions to deal with he presence of lead on this project.
12. All new structural steel shall be shop painted with an inorganic zinc rich primer per AASHTO M300, Type 1.
13. Cleaning and painting of the existing and new structural steel shall be specified in the special provision for "Cleaning and Painting Existing Steel Structures". All existing steel shall be cleaned per Near White Blast Cleaning - SSPC-SP-10. All existing steel be painted according to the requirements of Paint System 1 - OZ/E/U. The color of the final finish coat for all interior steel surfaces shall be Gray, Munsell No. 5B 7/1. The color of the final finish coat for the exterior and bottom flange of the fascia beams shall be Reddish Brown, Munsell No. 2.5YR 3/4.
14. A minimum of four air monitors will be required to monitor abrasive blasting operations at this site. See special provision for "Containment and Disposal of Lead Paint Cleaning Residues".
15. Contractor to protect existing underdeck luminaires during bridge construction. See Electrical plans.

INDEX OF SHEETS

TOTAL BILL OF MATERIAL

ITEM	UNIT	SUPER	SUB	TOTAL
Concrete Removal	Cu Yd		42.8	42.8
Slope Wall Removal	Sq Yd		1,107	1,107
Removal of Existing Concrete Deck	Each	1		1
Protective Shield	Sq Yd	782		782
Structure Excavation	Cu Yd		252	252
Concrete Structures	Cu Yd		68.0	68.0
Concrete Superstructure	Cu Yd	573.7		573.7
Bridge Deck Grooving	Sq Yd	1,874		1,874
Protective Coat	Sq Yd	2,430		2,430
Furnishing and Erecting Structural Steel	L Sum	0.1		0.1
Stud Shear Connectors	Each	5,874		5,874
Reinforcement Bars, Epoxy Coated	Pound	130,480	7,880	138,360
Bar Splicers	Each	689	80	769
Slope Wall 4 Inch	Sq Yd		1,131	1,131
Name Plates	Each	1		1
Preformed Joint Strip Seal	Foot	206		206
Elastomeric Bearing Assembly, Type I	Each	26		26
Anchor Bolts, 3/4"	Each	104		104
Temporary Sheet Piling	Sq Ft		455	455
Granular Backfill for Structures	Cu Yd		201	201
Epoxy Crack Injection	Foot		16	16
Geocomposite Wall Drain	Sq Yd		173	173
Plpe Underdrains For Structures 4"	Foot		270	270
Concrete Wearing Surface, 5"	Sq Yd	422		422
Precast Bridge Approach Slab	Sq Ft	3,820		3,820
Bar Terminators	Each	352		352
Containment and Disposal of Lead Paint Cleaning Residues No. 1	L Sum	1		1
Jack and Remove Existing Bearings	Each	20		20
Structural Steel Removal	Pound	105,880		105,880
Cleaning and Painting Steel Bridge No. 1	L Sum	1		1
Structural Repair of Concrete (Depth Equal to or Less than 5 Inches)	Sq Ft		108	108
Structural Repair of Concrete (Depth Greater than 5 Inches)	Sq Ft		29	29
Drainage Scuppers, DS-11	Each	6		6

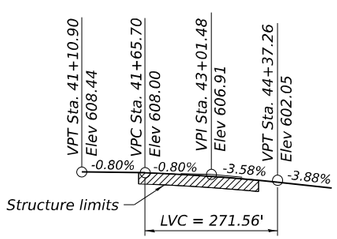

CENTER STREET PROFILE GRADE

(Along NB & SB PGL)

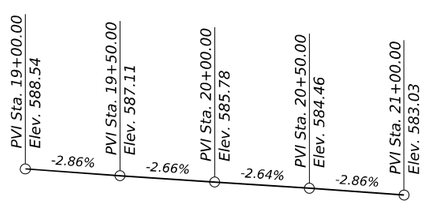

McDONOUGH STREET PROFILE GRADE

(Along ℄ Roadway)

STATION 42+86.50
RE-BUILT 20__ BY
STATE OF ILLINOIS
FAU RTE 316
SEC FAI 80 21 INTERCHANGE
LOADING HS20-44
STRUCTURE NO. 099-0186

NAME PLATE

See Std. 515001

Note:
Existing Name Plate shall be cleaned and relocated next to new Name Plate. Cost included with Name Plates.

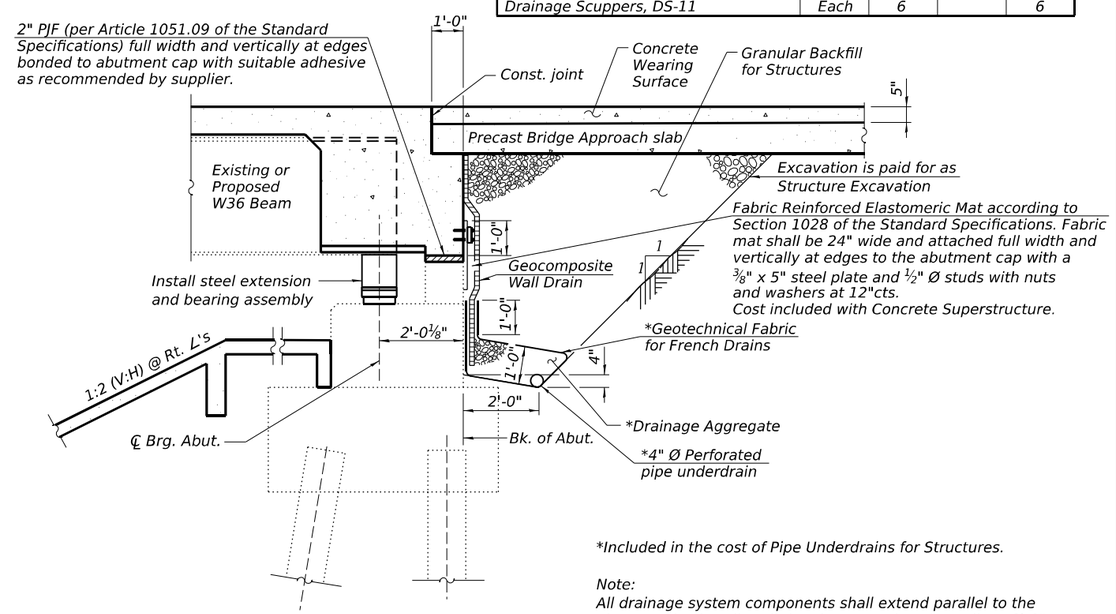

SECTION THRU ABUTMENT

(Horizontal dimensions @ Rt. ∠'s)

*Included in the cost of Pipe Underdrains for Structures.

Note:
All drainage system components shall extend parallel to the abutment back wall until they intersect the wingwalls or 2'-0" from the end of the wingwalls when the wings are parallel to the abutment. The pipe shall extend under the wingwall, if necessary, until intersecting the side slopes. The pipes shall drain into concrete headwalls. (See Article 601.05 of the Standard Specifications and Highway Standard 601101).

WSP USA Inc.
30 N. LASALLE STREET
SUITE 4200
CHICAGO, IL 60602
TEL: (312) 782-8150
FAX: (312) 782-1684

USER NAME = USSJ696614	DESIGNED - LAS	REVISED -	
	CHECKED - MS	REVISED -	
PLOT SCALE = 34.000 ' / in.	DRAWN - MA	REVISED -	
PLOT DATE = 6/10/2025	CHECKED - LAS	REVISED -	

STATE OF ILLINOIS
DEPARTMENT OF TRANSPORTATION

GENERAL DATA
STRUCTURE NO. 099-0186

SHEET SA-2 OF SA-37 SHEETS

F.A.U RTE.	SECTION	COUNTY	TOTAL SHEETS	SHEET NO.
316	FAI 80 21 INTERCHANGE	WILL	1209	620
		CONTRACT NO. 62R22		
		ILLINOIS	FED. AID PROJECT	

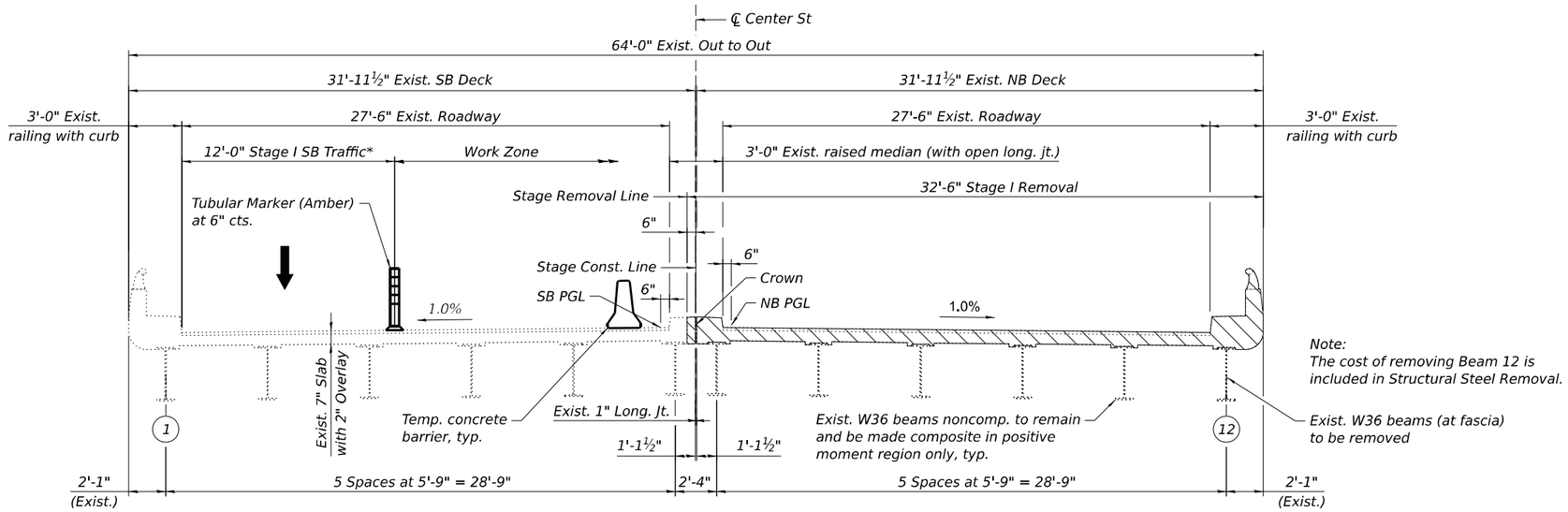

STAGE I REMOVAL
(Looking North)

LEGEND

Removal of Existing Concrete Deck

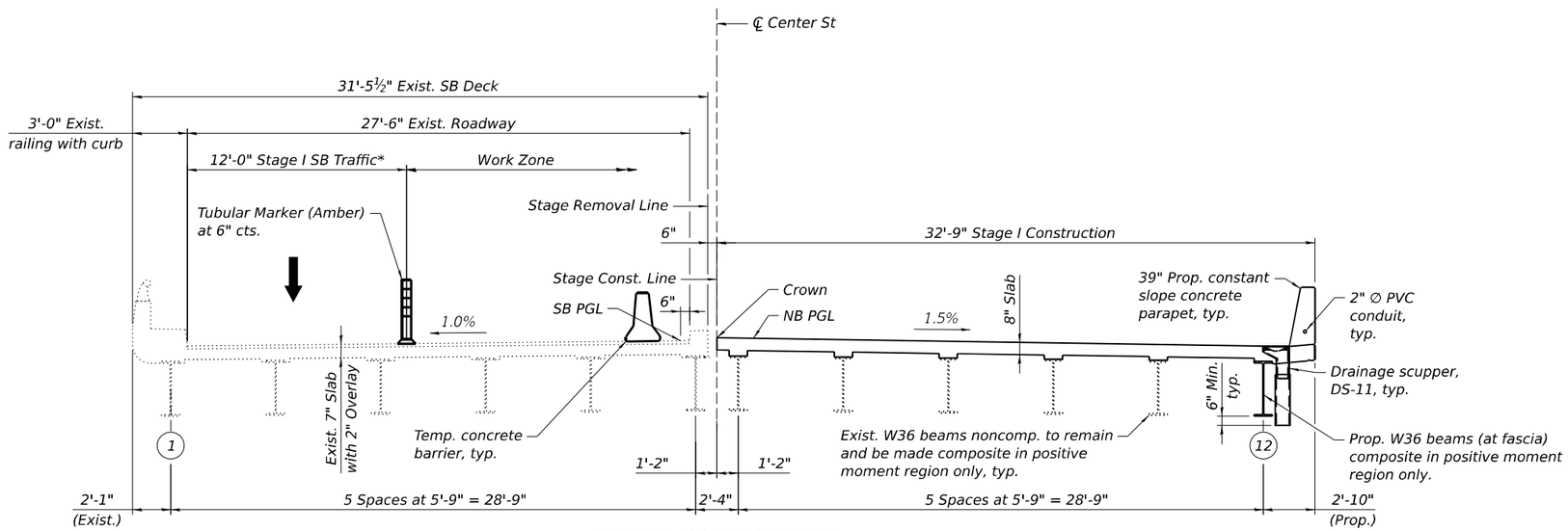

STAGE I CONSTRUCTION
(Looking North)

NOTES:

1. For Temporary Concrete Barrier, see sheet SA-5.
2. For quantity of Temporary Concrete Barrier, see Roadway Plans.
3. The cost of removing the existing railing, overlay, and protective shield is included in Removal of Existing Concrete Deck.

* SB traffic to WB I-80 Ramp with NB construction access, all other traffic detoured to local roads in Stage I

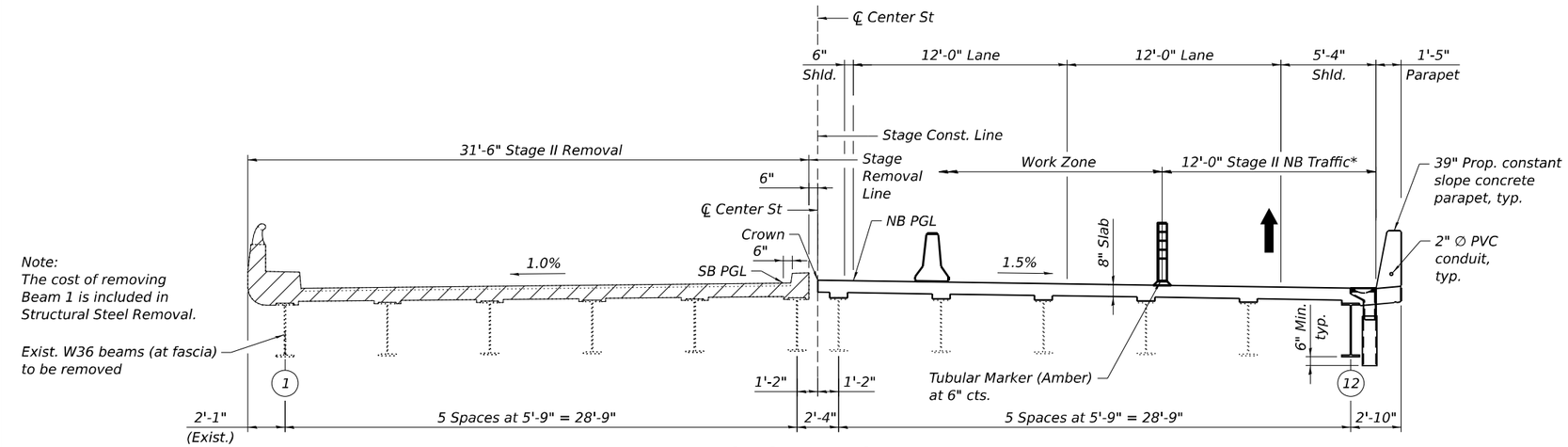

STAGE II REMOVAL

(Looking North)

LEGEND

— Removal of Existing Concrete Deck

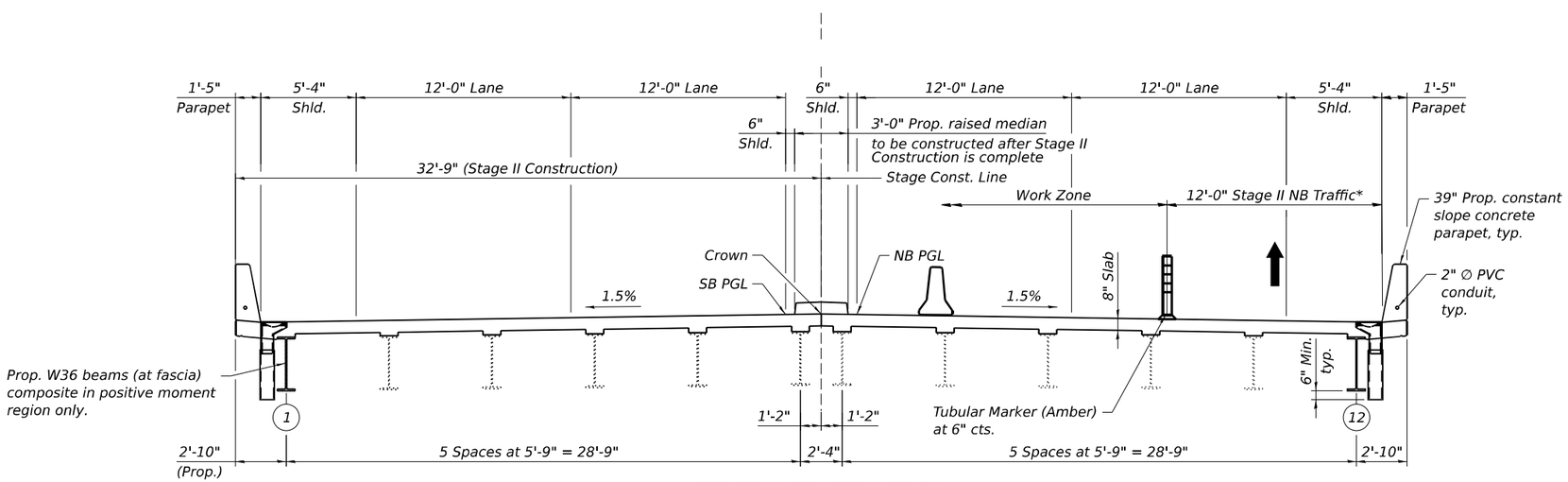

STAGE II CONSTRUCTION

(Looking North)

NOTES:

1. For Temporary Concrete Barrier, see sheet SA-5.
2. For quantity of Temporary Concrete Barrier, see Roadway Plans.
3. The cost of removing the existing railing, overlay, and protective shield is included in Removal of Existing Concrete Deck.

*NB traffic from WB I-80 Ramp with SB construction access, all other traffic detoured to local roads in Stage II

WSP USA Inc.
30 N. LASALLE STREET
SUITE 4200
CHICAGO, IL 60602
TEL: (312) 782-8150
FAX: (312) 782-1684

USER NAME = USSJ696614	DESIGNED - LAS	REVISED -	
	CHECKED - MS	REVISED -	
PLOT SCALE = 0.167 ' / in.	DRAWN - MA	REVISED -	
PLOT DATE = 6/10/2025	CHECKED - LAS	REVISED -	

STATE OF ILLINOIS
DEPARTMENT OF TRANSPORTATION

STAGE CONSTRUCTION DETAILS 2
STRUCTURE NO. 099-0186

SHEET SA-4 OF SA-37 SHEETS

F.A.U RTE.	SECTION	COUNTY	TOTAL SHEETS	SHEET NO.
316	FAI 80 21 INTERCHANGE	WILL	1209	622
		CONTRACT NO. 62R22		
	ILLINOIS	FED. AID PROJECT		

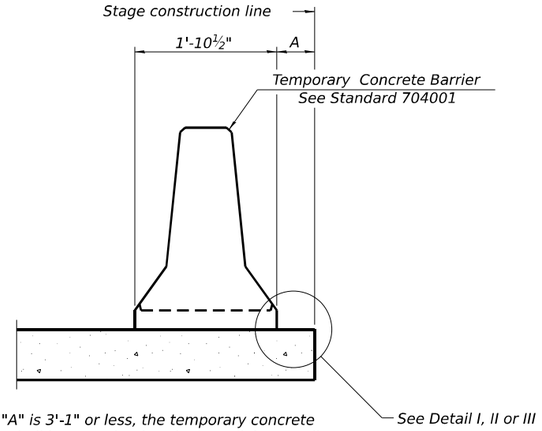

When "A" is 3'-1" or less, the temporary concrete barrier shall be restrained to the new slab according to Detail I, II or III. No restraint is required when "A" is greater than 3'-1".

NEW SLAB OR NEW DECK BEAM

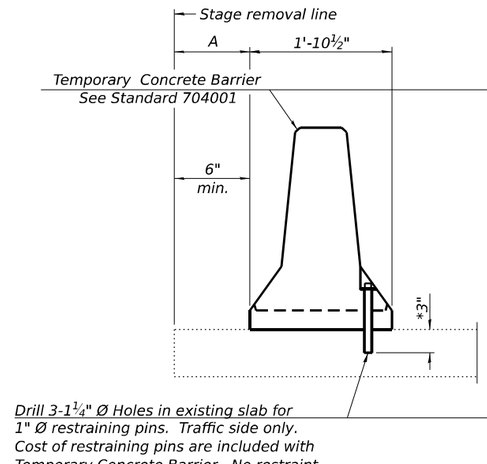

Drill 3-1¼" Ø Holes in existing slab for 1" Ø restraining pins. Traffic side only. Cost of restraining pins are included with Temporary Concrete Barrier. No restraint is required when "A" is greater than 3'-1".

EXISTING SLAB

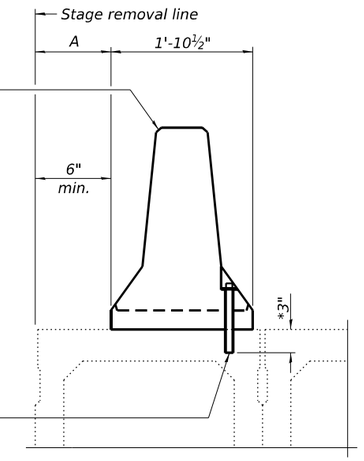

* When hot-mix asphalt wearing surface is present, embedment shall be 3" plus the wearing surface depth.

EXISTING DECK BEAM

SECTIONS THRU SLAB OR DECK BEAM

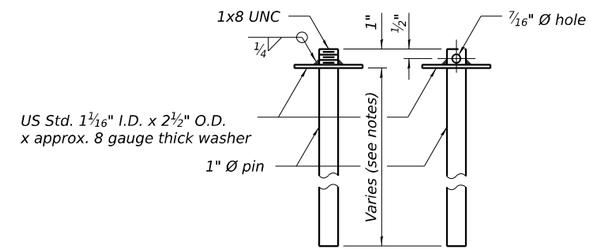

RESTRAINING PIN

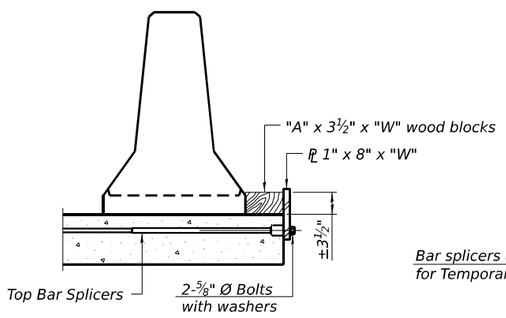

DETAIL I

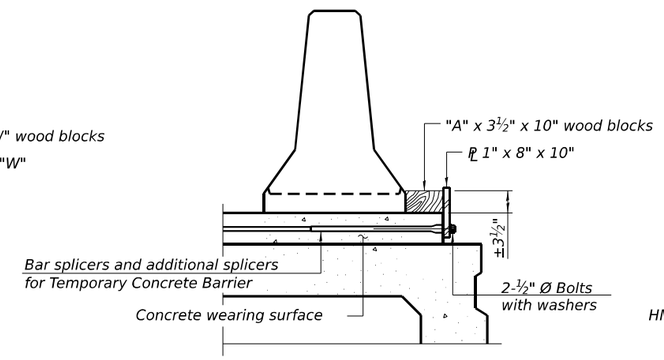

DETAIL II

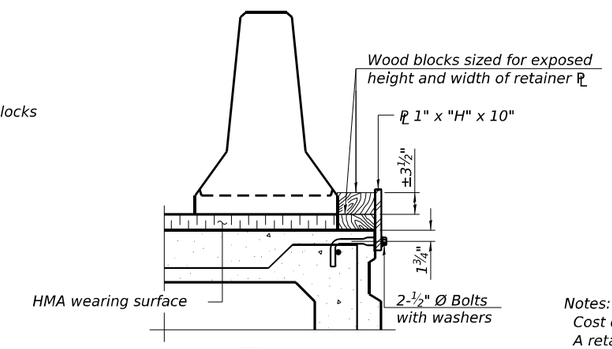

DETAIL III

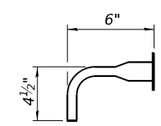

BAR SPLICER FOR #4 BAR - DETAIL III

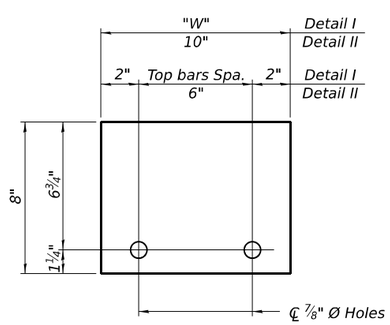

STEEL RETAINER PL 1" x 8" x "W"

(Detail I and II)

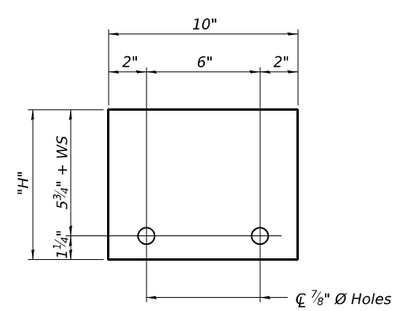

STEEL RETAINER PL 1" x "H" x 10"

(Detail III)

Notes:

Cost of retainer assembly is included with Temporary Concrete Barrier.

A retainer assembly shall be located at the approximate ℄ of each temporary concrete barrier.

The retainer plate shall not be removed until the concrete on the adjacent stage is ready to be poured. For Detail III applications the retainer plate shall not be removed until just prior to placing the adjacent beam.

When the 'A' dimension is less than 1½", the wood block shall be omitted and the barrier shall be placed in direct contact with the steel retainer plate. For deck beam applications the minimum required 'A' distance is 6" to accommodate the shear key clamping device.

Detail I - Installation for a new bridge deck or bridge slab.

Detail II - Installation for a new deck beam with an initial concrete wearing surface. Additional bar splicers shall be provided at 6'-0" centers and paired with the bar splicers of the concrete wearing surface reinforcement to accommodate the installation of the retainer assemblies. The cost of the additional bar splicers is included with the concrete wearing surface.

Detail III - Installation for a new deck beam with no initial wearing surface or with an initial hot-mix asphalt (HMA) wearing surface present. The deck beam directly beneath the temporary concrete barrier shall be fabricated with bar splicer inserts in the side of the beam, as detailed, to accommodate the installation of the retainer assemblies. A pair of bar splicers, 6" apart, shall be placed at 6'-0" centers along the length of the beam. The cost of the bar splicers is included with the deck beam.

RAILING CRITERIA

NCHRP 350 Test Level	3
Railing Weight (plf)	440

R-27

5-15-2023

WSP USA Inc.
30 N. LASALLE STREET
SUITE 4200
CHICAGO, IL 60602
TEL: (312) 782-8150
FAX: (312) 782-1684

USER NAME = USSJ696614	DESIGNED - MA	REVISED -	
	CHECKED - LAS	REVISED -	
PLOT SCALE = 7:11.99616 ':" / in.	DRAWN - MA	REVISED -	
PLOT DATE = 4/22/2025	CHECKED - LAS	REVISED -	

STATE OF ILLINOIS
DEPARTMENT OF TRANSPORTATION

TEMPORARY CONCRETE BARRIER
STRUCTURE NO. 099-0186

SHEET SA-5 OF SA-37 SHEETS

F.A.U RTE.	SECTION	COUNTY	TOTAL SHEETS	SHEET NO.
316	FAI 80 21 INTERCHANGE	WILL	1209	623
		CONTRACT NO. 62R22		
	ILLINOIS	FED. AID PROJECT		

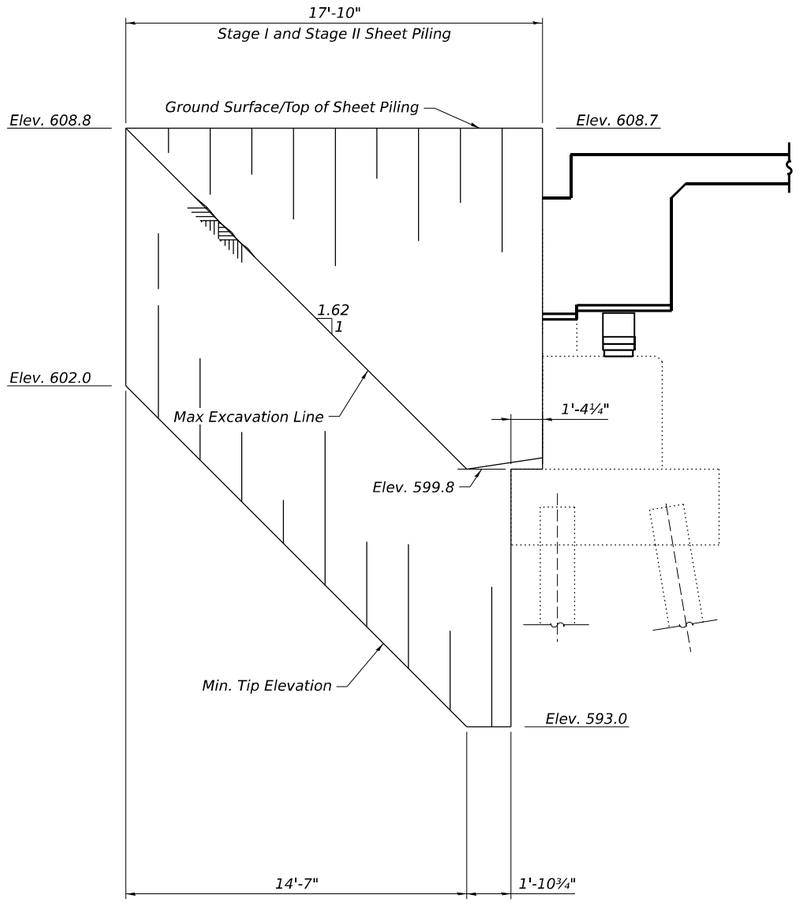

SOUTH ABUTMENT TEMPORARY SHEET PILING

Minimum Section Modulus = 4.3 in.³/ ft

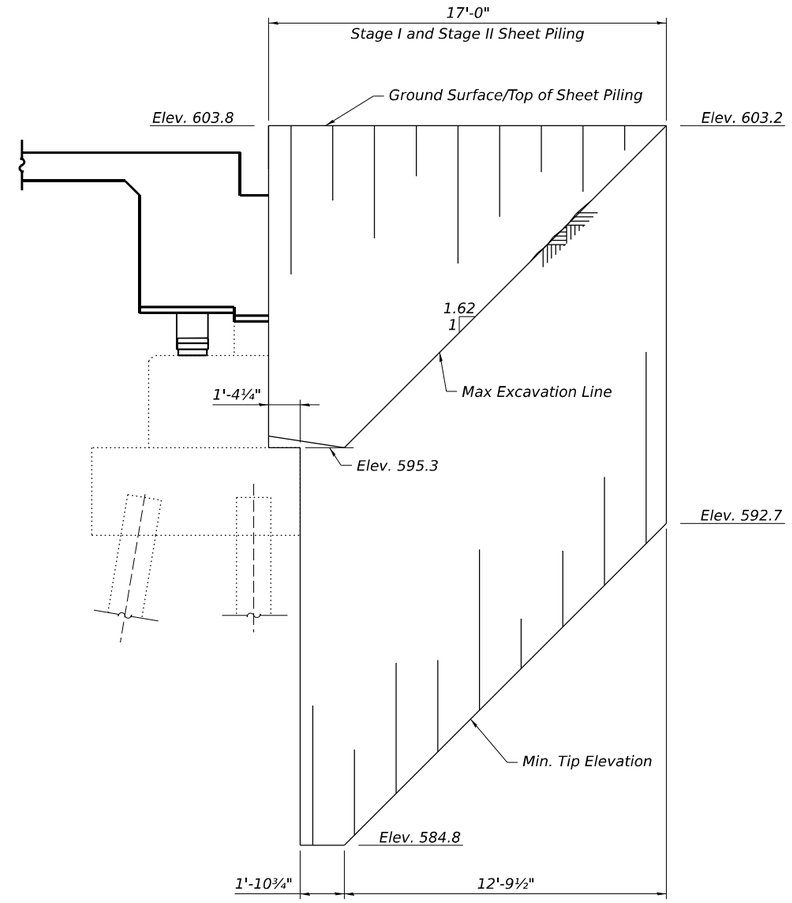

NORTH ABUTMENT TEMPORARY SHEET PILING

Minimum Section Modulus = 7.9 in.³/ ft

Notes:
If the Contractor chooses to alter the temporary cantilevered sheet piling design requirements shown on the plans, a design submittal including plan details and calculations will be required for review and acceptance by the Engineer.
The Contractor shall connect the first sheet to the existing abutment wall to ensure the stability of the sheets driven to the top of the existing footing. This connection shall be reviewed and accepted by the Engineer and included in the cost for Temporary Sheet Piling.

BILL OF MATERIAL

Item	Unit	Quantity
Temporary Sheet Piling	Sq. Ft.	455

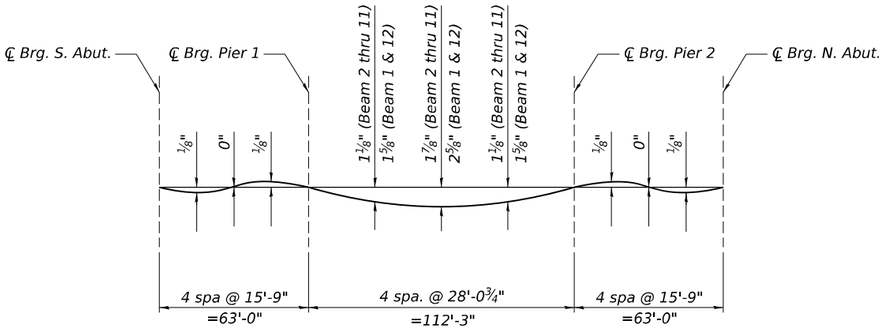

DEAD LOAD DEFLECTION DIAGRAM

(Includes weight of concrete only)

Note:
The above deflections are not to be used in the field if the engineer is working from the grade elevations adjusted for dead load deflections as shown on sheets SA-8 to SA-11.

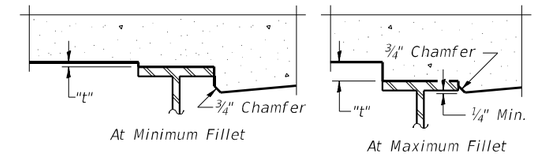

To determine "t": After all structural steel has been erected, elevations of the top flanges of the beams shall be taken at intervals shown below. These elevations subtracted from the "Theoretical Grade Elevations Adjusted for Dead Load Deflection" shown on sheets SA-8 to SA-11, minus slab thickness, equals the fillet heights "t" above top flange of beams.

FILLET HEIGHTS

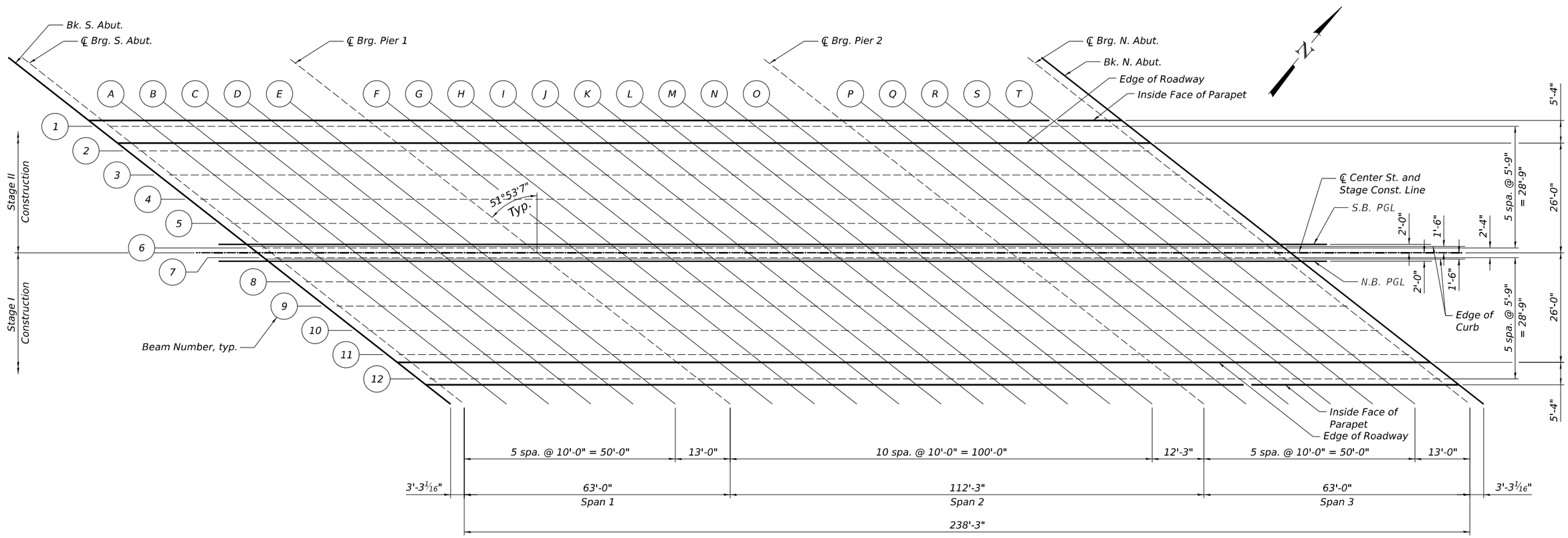

PLAN

MODEL: Sheet
FILE NAME: pw://transystems-pw.bentley.com:transyscorp-pw1-hosted/Documents/Projects_2018/CH401/401180022/03-WSP/CAD/62R22-SA-07-Top of Slab Elevs 1.dgn

WSP USA Inc.
30 N. LASALLE STREET
SUITE 4200
CHICAGO, IL 60602
TEL: (312) 782-8150
FAX: (312) 782-1684

USER NAME = USSJ696614	DESIGNED - MEA	REVISED -	
	CHECKED - LAS	REVISED -	
PLOT SCALE = 7:11.99616 ':" / in.	DRAWN - MEA	REVISED -	
PLOT DATE = 4/22/2025	CHECKED - LAS	REVISED -	

STATE OF ILLINOIS
DEPARTMENT OF TRANSPORTATION

TOP OF SLAB ELEVATIONS 1
STRUCTURE NO. 099-0186

SHEET SA-7 OF SA-37 SHEETS

F.A.U RTE.	SECTION	COUNTY	TOTAL SHEETS	SHEET NO.
316	FAI 80 21 INTERCHANGE	WILL	1209	625
		CONTRACT NO. 62R22		
		ILLINOIS	FED. AID PROJECT	

INSIDE FACE OF WEST PARAPET

Location	Station	Offset	Theoretical Grade Elevations	Theoretical Grade Elevations Adjusted for Dead Load Deflection
Bk. S. Abutment	41+24.18	-31.33'	607.89	607.89
℄ Brg. S. Abutment	41+27.43	-31.33'	607.87	607.87
A	41+37.43	-31.33'	607.79	607.79
B	41+47.43	-31.33'	607.71	607.71
C	41+57.43	-31.33'	607.63	607.63
D	41+67.43	-31.33'	607.54	607.53
E	41+77.43	-31.33'	607.46	607.44
℄ Brg. Pier 1	41+90.43	-31.33'	607.33	607.33
F	42+00.43	-31.33'	607.22	607.26
G	42+10.43	-31.33'	607.10	607.20
H	42+20.43	-31.33'	606.97	607.12
I	42+30.43	-31.33'	606.82	607.01
J	42+40.43	-31.33'	606.67	606.88
K	42+50.43	-31.33'	606.51	606.73
L	42+60.43	-31.33'	606.34	606.54
M	42+70.43	-31.33'	606.16	606.32
N	42+80.43	-31.33'	605.96	606.07
O	42+90.43	-31.33'	605.76	605.81
℄ Brg. Pier 2	43+02.68	-31.33'	605.50	605.50
P	43+12.68	-31.33'	605.27	605.25
Q	43+22.68	-31.33'	605.04	605.03
R	43+32.68	-31.33'	604.79	604.78
S	43+42.68	-31.33'	604.54	604.54
T	43+52.68	-31.33'	604.27	604.27
℄ Brg. N. Abutment	43+65.68	-31.33'	603.91	603.91
Bk. N. Abutment	43+68.94	-31.33'	603.82	603.82

BEAM 1

Location	Station	Offset	Theoretical Grade Elevations	Theoretical Grade Elevations Adjusted for Dead Load Deflection
Bk. S. Abutment	41+25.98	-29.92'	607.90	607.90
℄ Brg. S. Abutment	41+29.24	-29.92'	607.87	607.87
A	41+39.24	-29.92'	607.79	607.79
B	41+49.24	-29.92'	607.71	607.71
C	41+59.24	-29.92'	607.63	607.63
D	41+69.24	-29.92'	607.55	607.54
E	41+79.24	-29.92'	607.46	607.44
℄ Brg. Pier 1	41+92.24	-29.92'	607.33	607.33
F	42+02.24	-29.92'	607.22	607.26
G	42+12.24	-29.92'	607.09	607.19
H	42+22.24	-29.92'	606.96	607.11
I	42+32.24	-29.92'	606.82	607.01
J	42+42.24	-29.92'	606.67	606.88
K	42+52.24	-29.92'	606.50	606.72
L	42+62.24	-29.92'	606.33	606.53
M	42+72.24	-29.92'	606.14	606.30
N	42+82.24	-29.92'	605.95	606.06
O	42+92.24	-29.92'	605.75	605.80
℄ Brg. Pier 2	43+04.49	-29.92'	605.48	605.48
P	43+14.49	-29.92'	605.25	605.23
Q	43+24.49	-29.92'	605.02	605.01
R	43+34.49	-29.92'	604.77	604.76
S	43+44.49	-29.92'	604.51	604.51
T	43+54.49	-29.92'	604.24	604.24
℄ Brg. N. Abutment	43+67.49	-29.92'	603.88	603.88
Bk. N. Abutment	43+70.74	-29.92'	603.79	603.79

WEST EDGE OF ROADWAY

Location	Station	Offset	Theoretical Grade Elevations	Theoretical Grade Elevations Adjusted for Dead Load Deflection
Bk. S. Abutment	41+30.97	-26.00'	607.92	607.92
℄ Brg. S. Abutment	41+34.23	-26.00'	607.89	607.89
A	41+44.23	-26.00'	607.81	607.81
B	41+54.23	-26.00'	607.73	607.74
C	41+64.23	-26.00'	607.65	607.65
D	41+74.23	-26.00'	607.56	607.55
E	41+84.23	-26.00'	607.47	607.46
℄ Brg. Pier 1	41+97.23	-26.00'	607.33	607.33
F	42+07.23	-26.00'	607.22	607.25
G	42+17.23	-26.00'	607.09	607.16
H	42+27.23	-26.00'	606.95	607.05
I	42+37.23	-26.00'	606.80	606.93
J	42+47.23	-26.00'	606.64	606.79
K	42+57.23	-26.00'	606.48	606.63
L	42+67.23	-26.00'	606.30	606.44
M	42+77.23	-26.00'	606.11	606.22
N	42+87.23	-26.00'	605.91	605.98
O	42+97.23	-26.00'	605.70	605.73
℄ Brg. Pier 2	43+09.48	-26.00'	605.43	605.43
P	43+19.48	-26.00'	605.20	605.19
Q	43+29.48	-26.00'	604.95	604.94
R	43+39.48	-26.00'	604.70	604.70
S	43+49.48	-26.00'	604.44	604.44
T	43+59.48	-26.00'	604.16	604.17
℄ Brg. N. Abutment	43+72.48	-26.00'	603.79	603.79
Bk. N. Abutment	43+75.73	-26.00'	603.70	603.70

BEAM 2

Location	Station	Offset	Theoretical Grade Elevations	Theoretical Grade Elevations Adjusted for Dead Load Deflection
Bk. S. Abutment	41+33.31	-24.17'	607.93	607.93
℄ Brg. S. Abutment	41+36.57	-24.17'	607.90	607.90
A	41+46.57	-24.17'	607.82	607.82
B	41+56.57	-24.17'	607.74	607.75
C	41+66.57	-24.17'	607.66	607.66
D	41+76.57	-24.17'	607.57	607.56
E	41+86.57	-24.17'	607.47	607.46
℄ Brg. Pier 1	41+99.57	-24.17'	607.33	607.33
F	42+09.57	-24.17'	607.21	607.24
G	42+19.57	-24.17'	607.08	607.15
H	42+29.57	-24.17'	606.94	607.04
I	42+39.57	-24.17'	606.79	606.92
J	42+49.57	-24.17'	606.63	606.78
K	42+59.57	-24.17'	606.46	606.61
L	42+69.57	-24.17'	606.28	606.42
M	42+79.57	-24.17'	606.09	606.20
N	42+89.57	-24.17'	605.89	605.96
O	42+99.57	-24.17'	605.68	605.71
℄ Brg. Pier 2	43+11.82	-24.17'	605.40	605.40
P	43+21.82	-24.17'	605.17	605.16
Q	43+31.82	-24.17'	604.92	604.91
R	43+41.82	-24.17'	604.67	604.67
S	43+51.82	-24.17'	604.40	604.40
T	43+61.82	-24.17'	604.13	604.14
℄ Brg. N. Abutment	43+74.82	-24.17'	603.75	603.75
Bk. N. Abutment	43+78.07	-24.17'	603.66	603.66

BEAM 3

Location	Station	Offset	Theoretical Grade Elevations	Theoretical Grade Elevations Adjusted for Dead Load Deflection
Bk. S. Abutment	41+40.64	-18.42'	607.96	607.96
℄ Brg. S. Abutment	41+43.90	-18.42'	607.93	607.93
A	41+53.90	-18.42'	607.85	607.85
B	41+63.90	-18.42'	607.77	607.78
C	41+73.90	-18.42'	607.68	607.68
D	41+83.90	-18.42'	607.59	607.58
E	41+93.90	-18.42'	607.48	607.47
℄ Brg. Pier 1	42+06.90	-18.42'	607.33	607.33
F	42+16.90	-18.42'	607.21	607.24
G	42+26.90	-18.42'	607.07	607.14
H	42+36.90	-18.42'	606.92	607.02
I	42+46.90	-18.42'	606.76	606.89
J	42+56.90	-18.42'	606.59	606.74
K	42+66.90	-18.42'	606.42	606.57
L	42+76.90	-18.42'	606.23	606.37
M	42+86.90	-18.42'	606.03	606.14
N	42+96.90	-18.42'	605.82	605.89
O	43+06.90	-18.42'	605.60	605.63
℄ Brg. Pier 2	43+19.15	-18.42'	605.32	605.32
P	43+29.15	-18.42'	605.08	605.07
Q	43+39.15	-18.42'	604.82	604.81
R	43+49.15	-18.42'	604.56	604.56
S	43+59.15	-18.42'	604.29	604.29
T	43+69.15	-18.42'	604.00	604.01
℄ Brg. N. Abutment	43+82.15	-18.42'	603.62	603.62
Bk. N. Abutment	43+85.40	-18.42'	603.52	603.52

BEAM 4

Location	Station	Offset	Theoretical Grade Elevations	Theoretical Grade Elevations Adjusted for Dead Load Deflection
Bk. S. Abutment	41+47.97	-12.67'	607.98	607.98
℄ Brg. S. Abutment	41+51.22	-12.67'	607.96	607.96
A	41+61.22	-12.67'	607.88	607.88
B	41+71.22	-12.67'	607.79	607.80
C	41+81.22	-12.67'	607.70	607.70
D	41+91.22	-12.67'	607.60	607.59
E	42+01.22	-12.67'	607.49	607.48
℄ Brg. Pier 1	42+14.22	-12.67'	607.33	607.33
F	42+24.22	-12.67'	607.19	607.22
G	42+34.22	-12.67'	607.05	607.12
H	42+44.22	-12.67'	606.89	606.99
I	42+54.22	-12.67'	606.73	606.86
J	42+64.22	-12.67'	606.55	606.70
K	42+74.22	-12.67'	606.37	606.52
L	42+84.22	-12.67'	606.17	606.31
M	42+94.22	-12.67'	605.96	606.07
N	43+04.22	-12.67'	605.75	605.82
O	43+14.22	-12.67'	605.52	605.55
℄ Brg. Pier 2	43+26.47	-12.67'	605.23	605.23
P	43+36.47	-12.67'	604.98	604.97
Q	43+46.47	-12.67'	604.72	604.71
R	43+56.47	-12.67'	604.45	604.45
S	43+66.47	-12.67'	604.17	604.17
T	43+76.47	-12.67'	603.88	603.89
℄ Brg. N. Abutment	43+89.47	-12.67'	603.48	603.48
Bk. N. Abutment	43+92.73	-12.67'	603.38	603.38

NOTES:

1. All Elevations and Offsets are in feet.
2. Offsets are measured with respect to ℄ Center Street. Negative offsets are left and positive are right of the centerline.

BEAM 5

Location	Station	Offset	Theoretical Grade Elevations	Theoretical Grade Elevations Adjusted for Dead Load Deflection
Bk. S. Abutment	41+55.30	-6.92'	608.01	608.01
℄ Brg. S. Abutment	41+58.55	-6.92'	607.98	607.98
A	41+68.55	-6.92'	607.90	607.90
B	41+78.55	-6.92'	607.81	607.82
C	41+88.55	-6.92'	607.71	607.71
D	41+98.55	-6.92'	607.60	607.59
E	42+08.55	-6.92'	607.49	607.48
℄ Brg. Pier 1	42+21.55	-6.92'	607.32	607.32
F	42+31.55	-6.92'	607.17	607.20
G	42+41.55	-6.92'	607.02	607.09
H	42+51.55	-6.92'	606.86	606.96
I	42+61.55	-6.92'	606.69	606.82
J	42+71.55	-6.92'	606.50	606.65
K	42+81.55	-6.92'	606.31	606.46
L	42+91.55	-6.92'	606.10	606.24
M	43+01.55	-6.92'	605.89	606.00
N	43+11.55	-6.92'	605.67	605.74
O	43+21.55	-6.92'	605.43	605.46
℄ Brg. Pier 2	43+33.80	-6.92'	605.13	605.13
P	43+43.80	-6.92'	604.87	604.86
Q	43+53.80	-6.92'	604.61	604.60
R	43+63.80	-6.92'	604.33	604.33
S	43+73.80	-6.92'	604.04	604.04
T	43+83.80	-6.92'	603.74	603.75
℄ Brg. N. Abutment	43+96.80	-6.92'	603.34	603.34
Bk. N. Abutment	44+00.06	-6.92'	603.24	603.24

PROFILE GRADE (S.B.)

Location	Station	Offset	Theoretical Grade Elevations	Theoretical Grade Elevations Adjusted for Dead Load Deflection
Bk. S. Abutment	41+61.57	-2.00'	608.03	608.03
℄ Brg. S. Abutment	41+64.82	-2.00'	608.01	608.01
A	41+74.82	-2.00'	607.92	607.92
B	41+84.82	-2.00'	607.82	607.83
C	41+94.82	-2.00'	607.72	607.72
D	42+04.82	-2.00'	607.60	607.59
E	42+14.82	-2.00'	607.48	607.47
℄ Brg. Pier 1	42+27.82	-2.00'	607.30	607.30
F	42+37.82	-2.00'	607.15	607.18
G	42+47.82	-2.00'	606.99	607.06
H	42+57.82	-2.00'	606.82	606.92
I	42+67.82	-2.00'	606.65	606.78
J	42+77.82	-2.00'	606.46	606.61
K	42+87.82	-2.00'	606.26	606.41
L	42+97.82	-2.00'	606.05	606.19
M	43+07.82	-2.00'	605.83	605.94
N	43+17.82	-2.00'	605.59	605.66
O	43+27.82	-2.00'	605.35	605.38
℄ Brg. Pier 2	43+40.07	-2.00'	605.04	605.04
P	43+50.07	-2.00'	604.78	604.77
Q	43+60.07	-2.00'	604.51	604.50
R	43+70.07	-2.00'	604.22	604.22
S	43+80.07	-2.00'	603.93	603.93
T	43+90.07	-2.00'	603.62	603.63
℄ Brg. N. Abutment	44+03.07	-2.00'	603.21	603.21
Bk. N. Abutment	44+06.33	-2.00'	603.11	603.11

WEST EDGE OF CURB

Location	Station	Offset	Theoretical Grade Elevations	Theoretical Grade Elevations Adjusted for Dead Load Deflection
Bk. S. Abutment	41+62.20	-1.50'	608.04	608.04
℄ Brg. S. Abutment	41+65.46	-1.50'	608.01	608.01
A	41+75.46	-1.50'	607.92	607.92
B	41+85.46	-1.50'	607.83	607.84
C	41+95.46	-1.50'	607.72	607.72
D	42+05.46	-1.50'	607.60	607.59
E	42+15.46	-1.50'	607.48	607.47
℄ Brg. Pier 1	42+28.46	-1.50'	607.30	607.30
F	42+38.46	-1.50'	607.15	607.18
G	42+48.46	-1.50'	606.99	607.06
H	42+58.46	-1.50'	606.82	606.92
I	42+68.46	-1.50'	606.64	606.77
J	42+78.46	-1.50'	606.45	606.60
K	42+88.46	-1.50'	606.25	606.40
L	42+98.46	-1.50'	606.04	606.18
M	43+08.46	-1.50'	605.82	605.93
N	43+18.46	-1.50'	605.59	605.66
O	43+28.46	-1.50'	605.35	605.38
℄ Brg. Pier 2	43+40.71	-1.50'	605.04	605.04
P	43+50.71	-1.50'	604.77	604.76
Q	43+60.71	-1.50'	604.50	604.49
R	43+70.71	-1.50'	604.21	604.21
S	43+80.71	-1.50'	603.92	603.92
T	43+90.71	-1.50'	603.61	603.62
℄ Brg. N. Abutment	44+03.71	-1.50'	603.20	603.20
Bk. N. Abutment	44+06.96	-1.50'	603.09	603.09

BEAM 6

Location	Station	Offset	Theoretical Grade Elevations	Theoretical Grade Elevations Adjusted for Dead Load Deflection
Bk. S. Abutment	41+62.63	-1.17'	608.04	608.04
℄ Brg. S. Abutment	41+65.88	-1.17'	608.01	608.01
A	41+75.88	-1.17'	607.92	607.92
B	41+85.88	-1.17'	607.83	607.84
C	41+95.88	-1.17'	607.72	607.72
D	42+05.88	-1.17'	607.60	607.59
E	42+15.88	-1.17'	607.48	607.47
℄ Brg. Pier 1	42+28.88	-1.17'	607.30	607.30
F	42+38.88	-1.17'	607.15	607.18
G	42+48.88	-1.17'	606.99	607.06
H	42+58.88	-1.17'	606.82	606.92
I	42+68.88	-1.17'	606.64	606.77
J	42+78.88	-1.17'	606.45	606.60
K	42+88.88	-1.17'	606.25	606.40
L	42+98.88	-1.17'	606.04	606.18
M	43+08.88	-1.17'	605.81	605.92
N	43+18.88	-1.17'	605.58	605.65
O	43+28.88	-1.17'	605.34	605.37
℄ Brg. Pier 2	43+41.13	-1.17'	605.03	605.03
P	43+51.13	-1.17'	604.77	604.76
Q	43+61.13	-1.17'	604.49	604.48
R	43+71.13	-1.17'	604.21	604.21
S	43+81.13	-1.17'	603.91	603.91
T	43+91.13	-1.17'	603.60	603.61
℄ Brg. N. Abutment	44+04.13	-1.17'	603.19	603.19
Bk. N. Abutment	44+07.39	-1.17'	603.09	603.09

℄ CENTER ST. & STAGE CONSTRUCTION LINE

Location	Station	Offset	Theoretical Grade Elevations	Theoretical Grade Elevations Adjusted for Dead Load Deflection
Bk. S. Abutment	41+64.11	0.00'	608.04	608.04
℄ Brg. S. Abutment	41+67.37	0.00'	608.01	608.01
A	41+77.37	0.00'	607.93	607.93
B	41+87.37	0.00'	607.83	607.84
C	41+97.37	0.00'	607.72	607.72
D	42+07.37	0.00'	607.60	607.59
E	42+17.37	0.00'	607.48	607.47
℄ Brg. Pier 1	42+30.37	0.00'	607.29	607.29
F	42+40.37	0.00'	607.14	607.17
G	42+50.37	0.00'	606.98	607.05
H	42+60.37	0.00'	606.81	606.91
I	42+70.37	0.00'	606.63	606.76
J	42+80.37	0.00'	606.44	606.59
K	42+90.37	0.00'	606.23	606.38
L	43+00.37	0.00'	606.02	606.16
M	43+10.37	0.00'	605.80	605.91
N	43+20.37	0.00'	605.56	605.63
O	43+30.37	0.00'	605.32	605.35
℄ Brg. Pier 2	43+42.62	0.00'	605.01	605.01
P	43+52.62	0.00'	604.74	604.73
Q	43+62.62	0.00'	604.47	604.46
R	43+72.62	0.00'	604.18	604.18
S	43+82.62	0.00'	603.88	603.88
T	43+92.62	0.00'	603.58	603.59
℄ Brg. N. Abutment	44+05.62	0.00'	603.16	603.16
Bk. N. Abutment	44+08.88	0.00'	603.05	603.05

NOTES:

1. All Elevations and Offsets are in feet.
2. Offsets are measured with respect to ℄ Center Street. Negative offsets are left and positive are right of the centerline.

BEAM 7

Location	Station	Offset	Theoretical Grade Elevations	Theoretical Grade Elevations Adjusted for Dead Load Deflection
Bk. S. Abutment	41+65.60	1.17'	608.01	608.01
℄ Brg. S. Abutment	41+68.86	1.17'	607.98	607.98
A	41+78.86	1.17'	607.89	607.89
B	41+88.86	1.17'	607.80	607.81
C	41+98.86	1.17'	607.69	607.69
D	42+08.86	1.17'	607.57	607.56
E	42+18.86	1.17'	607.44	607.43
℄ Brg. Pier 1	42+31.86	1.17'	607.26	607.26
F	42+41.86	1.17'	607.10	607.13
G	42+51.86	1.17'	606.94	607.01
H	42+61.86	1.17'	606.77	606.87
I	42+71.86	1.17'	606.58	606.71
J	42+81.86	1.17'	606.39	606.54
K	42+91.86	1.17'	606.18	606.33
L	43+01.86	1.17'	605.97	606.11
M	43+11.86	1.17'	605.75	605.86
N	43+21.86	1.17'	605.51	605.58
O	43+31.86	1.17'	605.27	605.30
℄ Brg. Pier 2	43+44.11	1.17'	604.95	604.95
P	43+54.11	1.17'	604.68	604.67
Q	43+64.11	1.17'	604.41	604.40
R	43+74.11	1.17'	604.12	604.12
S	43+84.11	1.17'	603.82	603.82
T	43+94.11	1.17'	603.51	603.52
℄ Brg. N. Abutment	44+07.11	1.17'	603.09	603.09
Bk. N. Abutment	44+10.36	1.17'	602.99	602.99

EAST EDGE OF CURB

Location	Station	Offset	Theoretical Grade Elevations	Theoretical Grade Elevations Adjusted for Dead Load Deflection
Bk. S. Abutment	41+66.03	1.50'	608.00	608.00
℄ Brg. S. Abutment	41+69.28	1.50'	607.97	607.97
A	41+79.28	1.50'	607.89	607.89
B	41+89.28	1.50'	607.79	607.80
C	41+99.28	1.50'	607.68	607.68
D	42+09.28	1.50'	607.56	607.55
E	42+19.28	1.50'	607.43	607.42
℄ Brg. Pier 1	42+32.28	1.50'	607.24	607.24
F	42+42.28	1.50'	607.09	607.12
G	42+52.28	1.50'	606.93	607.00
H	42+62.28	1.50'	606.75	606.85
I	42+72.28	1.50'	606.57	606.70
J	42+82.28	1.50'	606.38	606.53
K	42+92.28	1.50'	606.17	606.32
L	43+02.28	1.50'	605.96	606.10
M	43+12.28	1.50'	605.73	605.84
N	43+22.28	1.50'	605.50	605.57
O	43+32.28	1.50'	605.25	605.28
℄ Brg. Pier 2	43+44.53	1.50'	604.94	604.94
P	43+54.53	1.50'	604.67	604.66
Q	43+64.53	1.50'	604.39	604.38
R	43+74.53	1.50'	604.10	604.10
S	43+84.53	1.50'	603.80	603.80
T	43+94.53	1.50'	603.49	603.50
℄ Brg. N. Abutment	44+07.53	1.50'	603.08	603.08
Bk. N. Abutment	44+10.79	1.50'	602.97	602.97

PROFILE GRADE (N.B.)

Location	Station	Offset	Theoretical Grade Elevations	Theoretical Grade Elevations Adjusted for Dead Load Deflection
Bk. S. Abutment	41+66.66	2.00'	607.99	607.99
℄ Brg. S. Abutment	41+69.92	2.00'	607.96	607.96
A	41+79.92	2.00'	607.87	607.87
B	41+89.92	2.00'	607.77	607.78
C	41+99.92	2.00'	607.66	607.66
D	42+09.92	2.00'	607.54	607.53
E	42+19.92	2.00'	607.41	607.40
℄ Brg. Pier 1	42+32.92	2.00'	607.23	607.23
F	42+42.92	2.00'	607.07	607.10
G	42+52.92	2.00'	606.91	606.98
H	42+62.92	2.00'	606.73	606.83
I	42+72.92	2.00'	606.55	606.68
J	42+82.92	2.00'	606.36	606.51
K	42+92.92	2.00'	606.15	606.30
L	43+02.92	2.00'	605.93	606.07
M	43+12.92	2.00'	605.71	605.82
N	43+22.92	2.00'	605.47	605.54
O	43+32.92	2.00'	605.23	605.26
℄ Brg. Pier 2	43+45.17	2.00'	604.91	604.91
P	43+55.17	2.00'	604.64	604.63
Q	43+65.17	2.00'	604.36	604.35
R	43+75.17	2.00'	604.07	604.07
S	43+85.17	2.00'	603.78	603.78
T	43+95.17	2.00'	603.47	603.48
℄ Brg. N. Abutment	44+08.17	2.00'	603.05	603.05
Bk. N. Abutment	44+11.42	2.00'	602.94	602.94

BEAM 8

Location	Station	Offset	Theoretical Grade Elevations	Theoretical Grade Elevations Adjusted for Dead Load Deflection
Bk. S. Abutment	41+72.93	6.92'	607.86	607.86
℄ Brg. S. Abutment	41+76.19	6.92'	607.83	607.83
A	41+86.19	6.92'	607.74	607.74
B	41+96.19	6.92'	607.63	607.64
C	42+06.19	6.92'	607.51	607.51
D	42+16.19	6.92'	607.39	607.38
E	42+26.19	6.92'	607.25	607.24
℄ Brg. Pier 1	42+39.19	6.92'	607.06	607.06
F	42+49.19	6.92'	606.90	606.93
G	42+59.19	6.92'	606.73	606.80
H	42+69.19	6.92'	606.55	606.65
I	42+79.19	6.92'	606.36	606.49
J	42+89.19	6.92'	606.15	606.30
K	42+99.19	6.92'	605.94	606.09
L	43+09.19	6.92'	605.72	605.86
M	43+19.19	6.92'	605.49	605.60
N	43+29.19	6.92'	605.25	605.32
O	43+39.19	6.92'	604.99	605.02
℄ Brg. Pier 2	43+51.44	6.92'	604.67	604.67
P	43+61.44	6.92'	604.40	604.39
Q	43+71.44	6.92'	604.11	604.10
R	43+81.44	6.92'	603.81	603.81
S	43+91.44	6.92'	603.51	603.51
T	44+01.44	6.92'	603.19	603.20
℄ Brg. N. Abutment	44+14.44	6.92'	602.77	602.77
Bk. N. Abutment	44+17.69	6.92'	602.66	602.66

BEAM 9

Location	Station	Offset	Theoretical Grade Elevations	Theoretical Grade Elevations Adjusted for Dead Load Deflection
Bk. S. Abutment	41+80.26	12.67'	607.71	607.71
℄ Brg. S. Abutment	41+83.52	12.67'	607.68	607.68
A	41+93.52	12.67'	607.57	607.57
B	42+03.52	12.67'	607.46	607.47
C	42+13.52	12.67'	607.34	607.34
D	42+23.52	12.67'	607.20	607.19
E	42+33.52	12.67'	607.06	607.05
℄ Brg. Pier 1	42+46.52	12.67'	606.86	606.86
F	42+56.52	12.67'	606.69	606.72
G	42+66.52	12.67'	606.51	606.58
H	42+76.52	12.67'	606.32	606.42
I	42+86.52	12.67'	606.12	606.25
J	42+96.52	12.67'	605.91	606.06
K	43+06.52	12.67'	605.69	605.84
L	43+16.52	12.67'	605.47	605.61
M	43+26.52	12.67'	605.23	605.34
N	43+36.52	12.67'	604.98	605.05
O	43+46.52	12.67'	604.72	604.75
℄ Brg. Pier 2	43+58.77	12.67'	604.38	604.38
P	43+68.77	12.67'	604.10	604.09
Q	43+78.77	12.67'	603.81	603.80
R	43+88.77	12.67'	603.50	603.50
S	43+98.77	12.67'	603.19	603.19
T	44+08.77	12.67'	602.87	602.88
℄ Brg. N. Abutment	44+21.77	12.67'	602.43	602.43
Bk. N. Abutment	44+25.02	12.67'	602.32	602.32

NOTES:

1. All Elevations and Offsets are in feet.
2. Offsets are measured with respect to ℄ Center Street. Negative offsets are left and positive are right of the centerline.

BEAM 10

Location	Station	Offset	Theoretical Grade Elevations	Theoretical Grade Elevations Adjusted for Dead Load Deflection
Bk. S. Abutment	41+87.59	18.42'	607.55	607.55
℄ Brg. S. Abutment	41+90.85	18.42'	607.52	607.52
A	42+00.85	18.42'	607.41	607.41
B	42+10.85	18.42'	607.28	607.29
C	42+20.85	18.42'	607.15	607.15
D	42+30.85	18.42'	607.01	607.00
E	42+40.85	18.42'	606.86	606.85
℄ Brg. Pier 1	42+53.85	18.42'	606.65	606.65
F	42+63.85	18.42'	606.47	606.50
G	42+73.85	18.42'	606.29	606.36
H	42+83.85	18.42'	606.09	606.19
I	42+93.85	18.42'	605.88	606.01
J	43+03.85	18.42'	605.67	605.82
K	43+13.85	18.42'	605.44	605.59
L	43+23.85	18.42'	605.20	605.34
M	43+33.85	18.42'	604.96	605.07
N	43+43.85	18.42'	604.70	604.77
O	43+53.85	18.42'	604.43	604.46
℄ Brg. Pier 2	43+66.10	18.42'	604.09	604.09
P	43+76.10	18.42'	603.80	603.79
Q	43+86.10	18.42'	603.50	603.49
R	43+96.10	18.42'	603.19	603.19
S	44+06.10	18.42'	602.87	602.87
T	44+16.10	18.42'	602.54	602.55
℄ Brg. N. Abutment	44+29.10	18.42'	602.09	602.09
Bk. N. Abutment	44+32.35	18.42'	601.98	601.98

BEAM 11

Location	Station	Offset	Theoretical Grade Elevations	Theoretical Grade Elevations Adjusted for Dead Load Deflection
Bk. S. Abutment	41+94.92	24.17'	607.39	607.39
℄ Brg. S. Abutment	41+98.18	24.17'	607.35	607.35
A	42+08.18	24.17'	607.23	607.23
B	42+18.18	24.17'	607.10	607.11
C	42+28.18	24.17'	606.96	606.96
D	42+38.18	24.17'	606.82	606.81
E	42+48.18	24.17'	606.66	606.65
℄ Brg. Pier 1	42+61.18	24.17'	606.43	606.43
F	42+71.18	24.17'	606.25	606.28
G	42+81.18	24.17'	606.06	606.13
H	42+91.18	24.17'	605.85	605.95
I	43+01.18	24.17'	605.64	605.77
J	43+11.18	24.17'	605.42	605.57
K	43+21.18	24.17'	605.18	605.33
L	43+31.18	24.17'	604.94	605.08
M	43+41.18	24.17'	604.68	604.79
N	43+51.18	24.17'	604.42	604.49
O	43+61.18	24.17'	604.14	604.17
℄ Brg. Pier 2	43+73.43	24.17'	603.79	603.79
P	43+83.43	24.17'	603.50	603.49
Q	43+93.43	24.17'	603.19	603.18
R	44+03.43	24.17'	602.87	602.87
S	44+13.43	24.17'	602.54	602.54
T	44+23.43	24.17'	602.20	602.21
℄ Brg. N. Abutment	44+36.43	24.17'	601.75	601.75
Bk. N. Abutment	44+39.68	24.17'	601.62	601.62

EAST EDGE OF ROADWAY

Location	Station	Offset	Theoretical Grade Elevations	Theoretical Grade Elevations Adjusted for Dead Load Deflection
Bk. S. Abutment	41+97.26	26.00'	607.33	607.33
℄ Brg. S. Abutment	42+00.51	26.00'	607.30	607.30
A	42+10.51	26.00'	607.17	607.17
B	42+20.51	26.00'	607.04	607.05
C	42+30.51	26.00'	606.90	606.90
D	42+40.51	26.00'	606.75	606.74
E	42+50.51	26.00'	606.59	606.58
℄ Brg. Pier 1	42+63.51	26.00'	606.36	606.36
F	42+73.51	26.00'	606.18	606.21
G	42+83.51	26.00'	605.98	606.05
H	42+93.51	26.00'	605.78	605.88
I	43+03.51	26.00'	605.56	605.69
J	43+13.51	26.00'	605.34	605.49
K	43+23.51	26.00'	605.10	605.25
L	43+33.51	26.00'	604.85	604.99
M	43+43.51	26.00'	604.60	604.71
N	43+53.51	26.00'	604.33	604.40
O	43+63.51	26.00'	604.05	604.08
℄ Brg. Pier 2	43+75.76	26.00'	603.70	603.70
P	43+85.76	26.00'	603.40	603.39
Q	43+95.76	26.00'	603.09	603.08
R	44+05.76	26.00'	602.77	602.77
S	44+15.76	26.00'	602.44	602.44
T	44+25.76	26.00'	602.09	602.10
℄ Brg. N. Abutment	44+38.76	26.00'	601.63	601.63
Bk. N. Abutment	44+42.02	26.00'	601.51	601.51

BEAM 12

Location	Station	Offset	Theoretical Grade Elevations	Theoretical Grade Elevations Adjusted for Dead Load Deflection
Bk. S. Abutment	42+02.25	29.92'	607.22	607.22
℄ Brg. S. Abutment	42+05.50	29.92'	607.18	607.18
A	42+15.50	29.92'	607.05	607.05
B	42+25.50	29.92'	606.92	606.92
C	42+35.50	29.92'	606.77	606.77
D	42+45.50	29.92'	606.61	606.60
E	42+55.50	29.92'	606.45	606.43
℄ Brg. Pier 1	42+68.50	29.92'	606.21	606.21
F	42+78.50	29.92'	606.02	606.06
G	42+88.50	29.92'	605.82	605.92
H	42+98.50	29.92'	605.61	605.76
I	43+08.50	29.92'	605.39	605.58
J	43+18.50	29.92'	605.16	605.37
K	43+28.50	29.92'	604.92	605.14
L	43+38.50	29.92'	604.67	604.87
M	43+48.50	29.92'	604.40	604.56
N	43+58.50	29.92'	604.13	604.24
O	43+68.50	29.92'	603.85	603.90
℄ Brg. Pier 2	43+80.75	29.92'	603.49	603.49
P	43+90.75	29.92'	603.18	603.16
Q	44+00.75	29.92'	602.87	602.86
R	44+10.75	29.92'	602.54	602.53
S	44+20.75	29.92'	602.21	602.21
T	44+30.75	29.92'	601.86	601.86
℄ Brg. N. Abutment	44+43.75	29.92'	601.38	601.38
Bk. N. Abutment	44+47.01	29.92'	601.25	601.25

INSIDE FACE OF EAST PARAPET

Location	Station	Offset	Theoretical Grade Elevations	Theoretical Grade Elevations Adjusted for Dead Load Deflection
Bk. S. Abutment	42+04.05	31.33'	607.17	607.17
℄ Brg. S. Abutment	42+07.31	31.33'	607.13	607.13
A	42+17.31	31.33'	607.01	607.01
B	42+27.31	31.33'	606.87	606.87
C	42+37.31	31.33'	606.72	606.72
D	42+47.31	31.33'	606.56	606.55
E	42+57.31	31.33'	606.39	606.37
℄ Brg. Pier 1	42+70.31	31.33'	606.16	606.16
F	42+80.31	31.33'	605.97	606.01
G	42+90.31	31.33'	605.76	605.86
H	43+00.31	31.33'	605.55	605.70
I	43+10.31	31.33'	605.33	605.52
J	43+20.31	31.33'	605.10	605.31
K	43+30.31	31.33'	604.85	605.07
L	43+40.31	31.33'	604.60	604.80
M	43+50.31	31.33'	604.33	604.49
N	43+60.31	31.33'	604.06	604.17
O	43+70.31	31.33'	603.78	603.83
℄ Brg. Pier 2	43+82.56	31.33'	603.41	603.41
P	43+92.56	31.33'	603.11	603.09
Q	44+02.56	31.33'	602.79	602.78
R	44+12.56	31.33'	602.46	602.45
S	44+22.56	31.33'	602.12	602.12
T	44+32.56	31.33'	601.78	601.78
℄ Brg. N. Abutment	44+45.56	31.33'	601.29	601.29
Bk. N. Abutment	44+48.81	31.33'	601.16	601.16

NOTES:

1. All Elevations and Offsets are in feet.
2. Offsets are measured with respect to ℄ Center Street. Negative offsets are left and positive are right of the centerline.

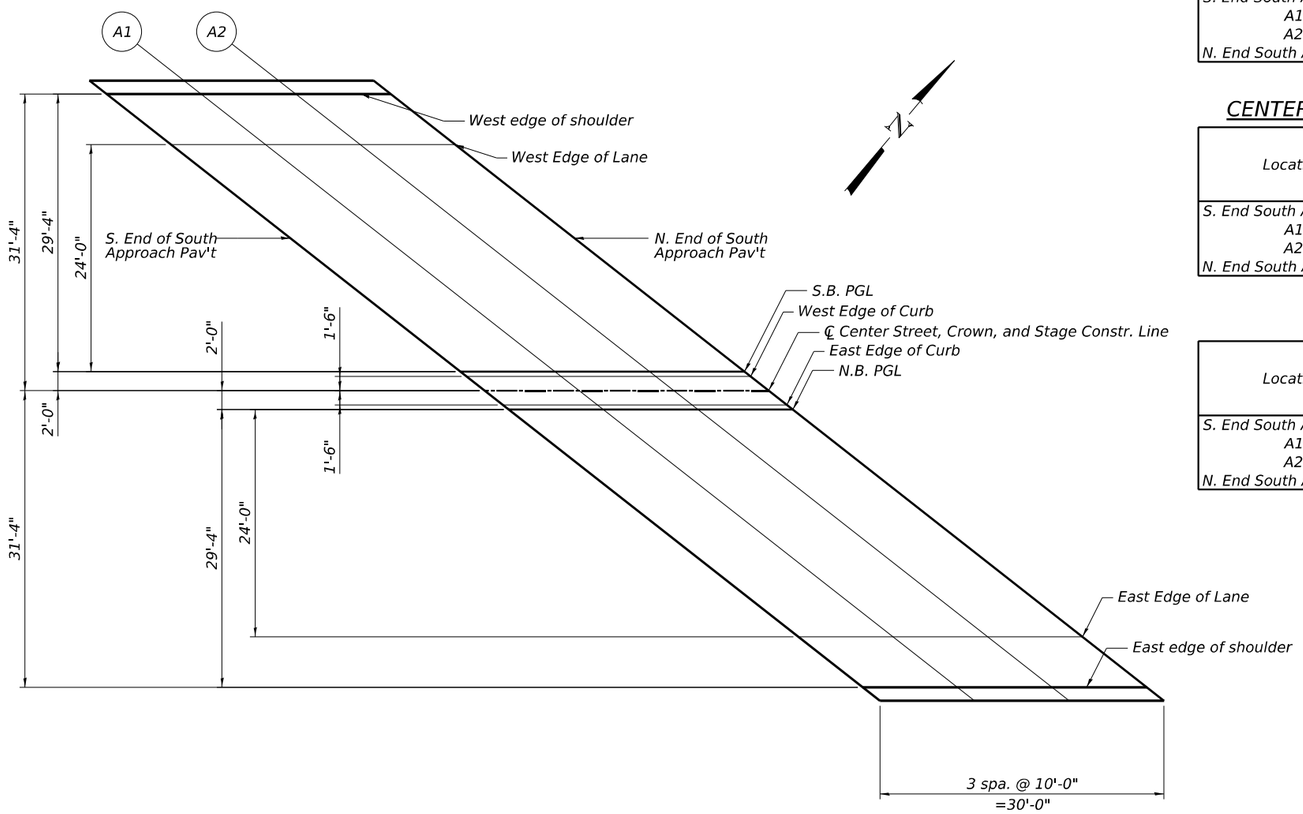

PLAN
(South Approach)

WEST EDGE OF SHOULDER

Location	Station	Offset	Theoretical Grade Elevations
S. End South Appr. Pav't.	40+95.79	-31.33	608.11
A1	41+05.79	-31.33	608.04
A2	41+15.79	-31.33	607.96
N. End South Appr. Pav't.	41+25.79	-31.33	607.88

WEST EDGE OF LANE

Location	Station	Offset	Theoretical Grade Elevations
S. End South Appr. Pav't.	41+02.59	-26.00	608.14
A1	41+12.59	-26.00	608.07
A2	41+22.59	-26.00	607.99
N. End South Appr. Pav't.	41+32.59	-26.00	607.91

S.B. PROFILE GRADE LINE

Location	Station	Offset	Theoretical Grade Elevations
S. End South Appr. Pav't.	41+33.18	-2.00	608.26
A1	41+43.18	-2.00	608.18
A2	41+53.18	-2.00	608.10
N. End South Appr. Pav't.	41+63.18	-2.00	608.02

WEST EDGE OF CURB

Location	Station	Offset	Theoretical Grade Elevations
S. End South Appr. Pav't.	41+33.82	-1.50	608.26
A1	41+43.82	-1.50	608.18
A2	41+53.82	-1.50	608.10
N. End South Appr. Pav't.	41+63.82	-1.50	608.02

CENTER ST,. CROWN, & STAGE CONSTR. LINE

Location	Station	Offset	Theoretical Grade Elevations
S. End South Appr. Pav't.	41+35.73	0.00'	608.27
A1	41+45.73	0.00'	608.19
A2	41+55.73	0.00'	608.11
N. End South Appr. Pav't.	41+65.73	0.00'	608.03

EAST EDGE OF CURB

Location	Station	Offset	Theoretical Grade Elevations
S. End South Appr. Pav't.	41+37.64	1.50'	608.23
A1	41+47.64	1.50'	608.15
A2	41+57.64	1.50'	608.07
N. End South Appr. Pav't.	41+67.64	1.50'	607.99

N.B. PROFILE GRADE LINE

Location	Station	Offset	Theoretical Grade Elevations
S. End South Appr. Pav't.	41+38.28	2.00'	608.22
A1	41+48.28	2.00'	608.14
A2	41+58.28	2.00'	608.06
N. End South Appr. Pav't.	41+68.28	2.00'	607.98

EAST EDGE OF LANE

Location	Station	Offset	Theoretical Grade Elevations
S. End South Appr. Pav't.	41+68.87	26.00'	607.61
A1	41+78.87	26.00'	607.52
A2	41+88.87	26.00'	607.42
N. End South Appr. Pav't.	41+98.87	26.00'	607.31

EAST EDGE OF SHOULDER

Location	Station	Offset	Theoretical Grade Elevations
S. End South Appr. Pav't.	41+75.67	31.33'	607.47
A1	41+85.05	31.33'	607.38
A2	41+95.05	31.33'	607.27
N. End South Appr. Pav't.	42+05.05	31.33'	607.15

NOTES:
1. All Elevations and Offsets are in feet.
2. Offsets are measured with respect to ℄ Center Street.

WSP USA Inc.
30 N. LASALLE STREET
SUITE 4200
CHICAGO, IL 60602
TEL: (312) 782-8150
FAX: (312) 782-1684

USER NAME = USSJ696614	DESIGNED - MEA	REVISED -	
	CHECKED - LAS	REVISED -	
PLOT SCALE = 7:11.99616 ':" / in.	DRAWN - MEA	REVISED -	
PLOT DATE = 4/22/2025	CHECKED - LAS	REVISED -	

STATE OF ILLINOIS
DEPARTMENT OF TRANSPORTATION

TOP OF SOUTH APPROACH SLAB ELEVATIONS
STRUCTURE NO. 099-0186

SHEET SA-12 OF SA-37 SHEETS

F.A.U RTE.	SECTION	COUNTY	TOTAL SHEETS	SHEET NO.
316	FAI 80 21 INTERCHANGE	WILL	1209	630
		CONTRACT NO. 62R22		
	ILLINOIS	FED. AID PROJECT		

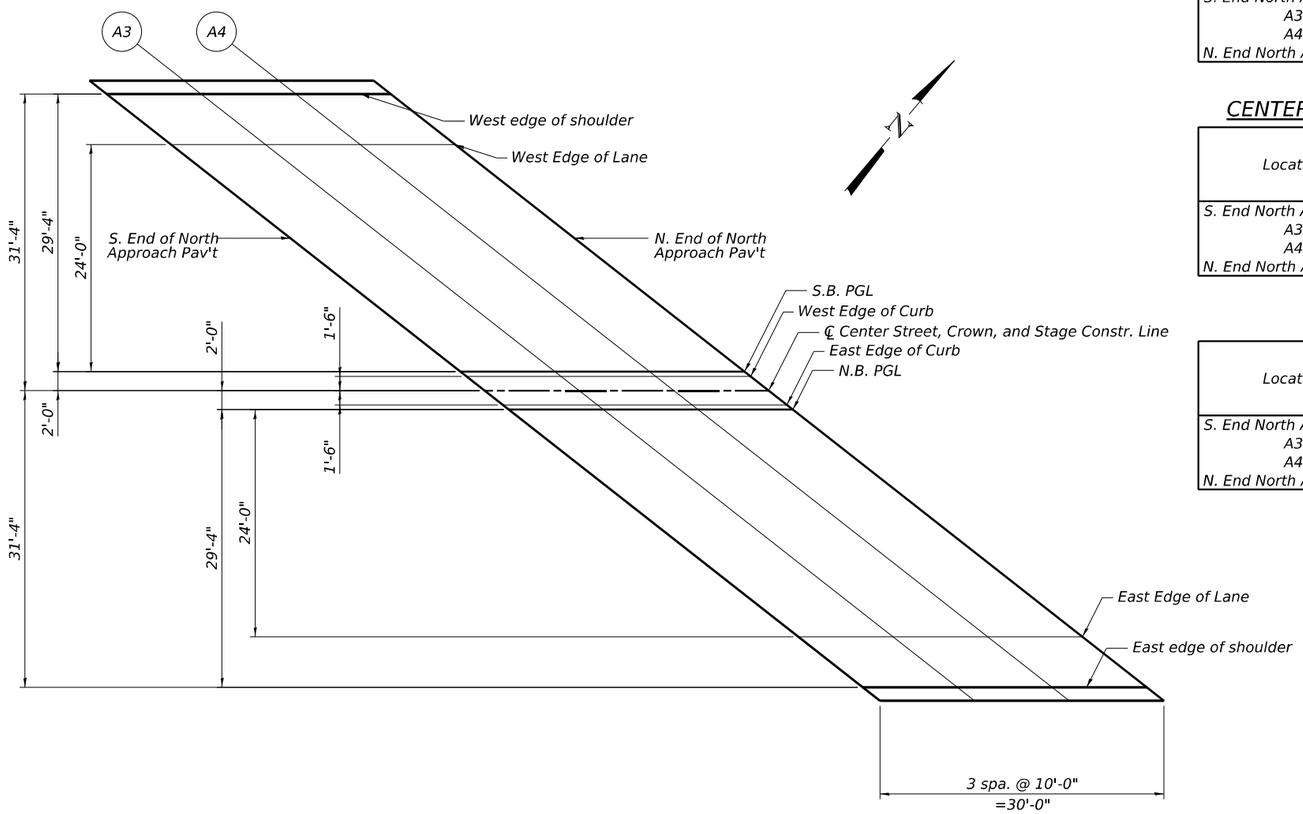

PLAN
(North Approach)

WEST EDGE OF SHOULDER

Location	Station	Offset	Theoretical Grade Elevations
S. End North Appr. Pav't.	43+67.32	-31.33'	603.86
A3	43+77.32	-31.33'	603.57
A4	43+87.32	-31.33'	603.27
N. End North Appr. Pav't.	43+97.32	-31.33'	602.96

WEST EDGE OF LANE

Location	Station	Offset	Theoretical Grade Elevations
S. End North Appr. Pav't.	43+74.12	-26.00'	603.75
A3	43+84.12	-26.00'	603.45
A4	43+94.12	-26.00'	603.14
N. End North Appr. Pav't.	44+04.12	-26.00'	602.80

S.B. PROFILE GRADE LINE

Location	Station	Offset	Theoretical Grade Elevations
S. End North Appr. Pav't.	44+04.71	-2.00'	603.16
A3	44+14.71	-2.00'	602.83
A4	44+24.71	-2.00'	602.49
N. End North Appr. Pav't.	44+34.71	-2.00'	602.14

WEST EDGE OF CURB

Location	Station	Offset	Theoretical Grade Elevations
S. End North Appr. Pav't.	44+05.35	-1.50'	603.15
A3	44+15.35	-1.50'	602.82
A4	44+25.35	-1.50'	602.48
N. End North Appr. Pav't.	44+35.35	-1.50'	602.12

CENTER ST,. CROWN, & STAGE CONSTR. LINE

Location	Station	Offset	Theoretical Grade Elevations
S. End North Appr. Pav't.	44+07.26	0.00'	603.11
A3	44+17.26	0.00'	602.77
A4	44+27.26	0.00'	602.43
N. End North Appr. Pav't.	44+37.26	0.00'	602.07

EAST EDGE OF CURB

Location	Station	Offset	Theoretical Grade Elevations
S. End North Appr. Pav't.	44+09.17	1.50'	603.02
A3	44+19.17	1.50'	602.69
A4	44+29.17	1.50'	602.34
N. End North Appr. Pav't.	44+39.17	1.50'	601.98

N.B. PROFILE GRADE LINE

Location	Station	Offset	Theoretical Grade Elevations
S. End North Appr. Pav't.	44+09.81	2.00'	602.99
A3	44+19.81	2.00'	602.66
A4	44+29.81	2.00'	602.31
N. End North Appr. Pav't.	44+39.81	2.00'	601.95

EAST EDGE OF LANE

Location	Station	Offset	Theoretical Grade Elevations
S. End North Appr. Pav't.	44+40.40	26.00'	601.56
A3	44+50.40	26.00'	601.17
A4	44+60.40	26.00'	600.79
N. End North Appr. Pav't.	44+70.40	26.00'	600.40

EAST EDGE OF SHOULDER

Location	Station	Offset	Theoretical Grade Elevations
S. End North Appr. Pav't.	44+47.20	31.33'	601.22
A3	44+57.20	31.33'	600.83
A4	44+67.20	31.33'	600.44
N. End North Appr. Pav't.	44+77.20	31.33'	600.06

NOTES:
1. All Elevations and Offsets are in feet.
2. Offsets are measured with respect to ℄ Center Street.

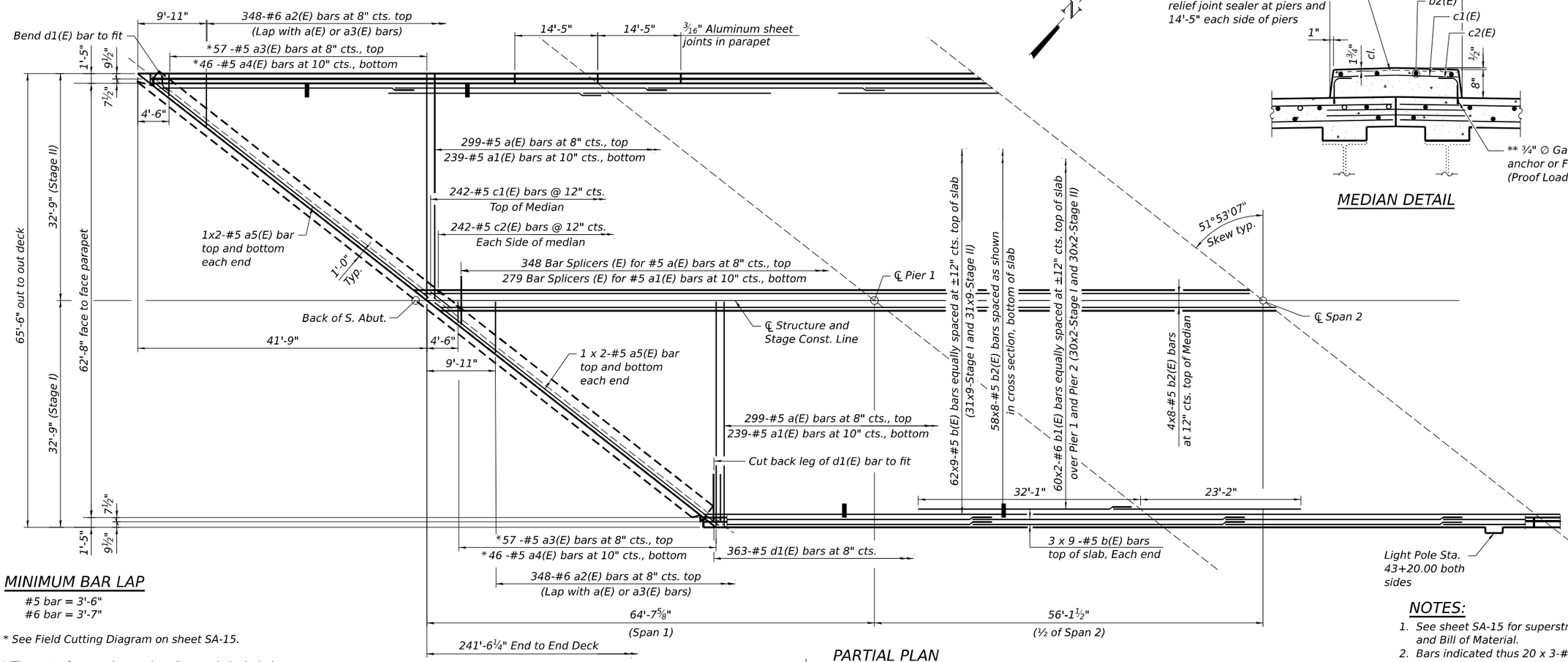

PARTIAL PLAN

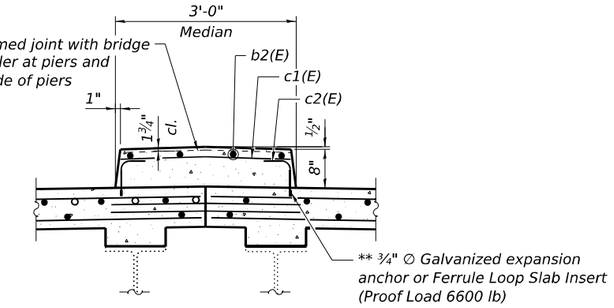

MEDIAN DETAIL

MINIMUM BAR LAP

#5 bar = 3'-6"
#6 bar = 3'-7"

* See Field Cutting Diagram on sheet SA-15.

** The cost of expansion anchors/inserts is included in the cost of Reinforcement Bars, Epoxy Coated

NOTES:

1. See sheet SA-15 for superstructure details and Bill of Material.
2. Bars indicated thus 20 x 3-#5 etc. indicates 20 lines of bars with 3 lengths per line.

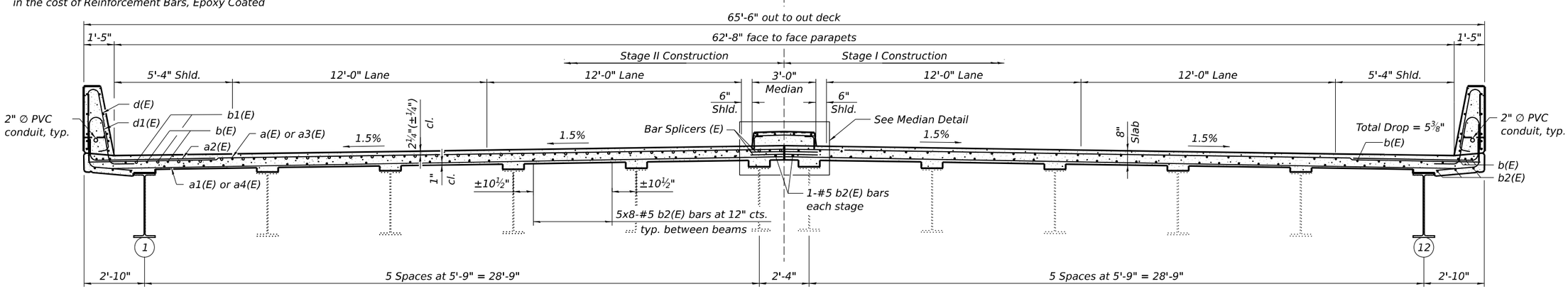

NEAR PIER

Note:
3'-0" Proposed Raised Median to be constructed after Stage II construction is complete.

CROSS SECTION

(Looking North)

NEAR MIDSPAN

*** Fill width along joint - backer rod not required

MODEL: Sheet
FILE NAME: pw://transystems-pw.bentley.com:transyscorp-pw1-hosted/Documents/Projects_2018/CH401/401180022/03-WSP/CAD/62R22-INT-4 (Center)/Sheets/Structural/SA-099-0186/0990186-62R22-SA-14-Superstructure Plan.dgn

WSP USA Inc.
30 N. LASALLE STREET
SUITE 4200
CHICAGO, IL 60602
TEL: (312) 782-8150
FAX: (312) 782-1684

USER NAME = USSJ696614	DESIGNED - PP	REVISED -	
	CHECKED - LAS	REVISED -	
PLOT SCALE = 0.167 ' / in.	DRAWN - PP	REVISED -	
PLOT DATE = 4/22/2025	CHECKED - LAS	REVISED -	

STATE OF ILLINOIS
DEPARTMENT OF TRANSPORTATION

SUPERSTRUCTURE PLAN
STRUCTURE NO. 099-0186

SHEET SA-14 OF SA-37 SHEETS

F.A.U RTE.	SECTION	COUNTY	TOTAL SHEETS	SHEET NO.
316	FAI 80 21 INTERCHANGE	WILL	1209	632
		CONTRACT NO. 62R22		
	ILLINOIS	FED. AID PROJECT		

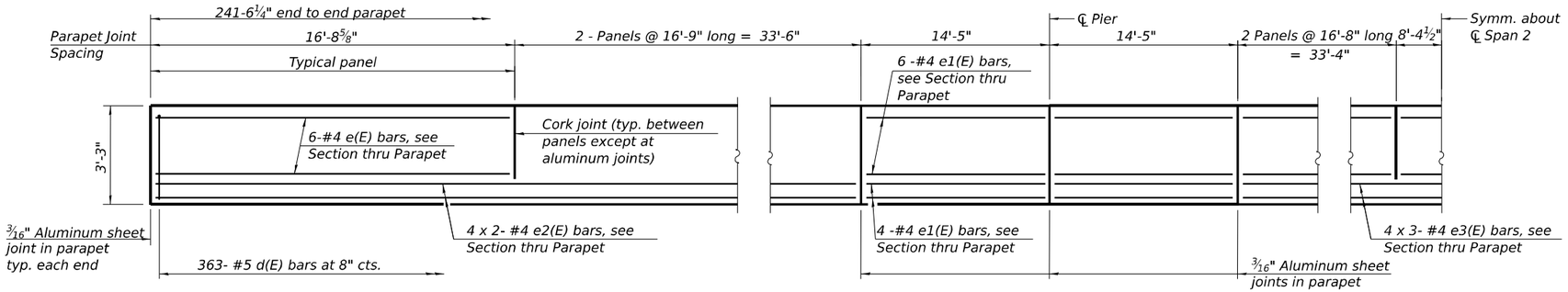

INSIDE ELEVATION OF PARAPET

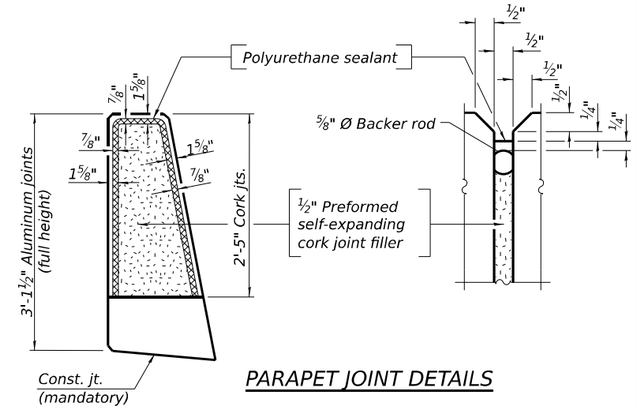

PARAPET JOINT DETAILS

Notes:

The 3/16" aluminum sheet shall be ASTM B 209 alloy 3003-H14 and coated to minimize reaction with wet concrete. Cost included with Concrete Superstructure.

The polyurethane sealant shall be according to Article 1050.04 of the Std. Spec. and the color shall be gray.

Bar Terminators paid for separately. See Total Bill of Material.

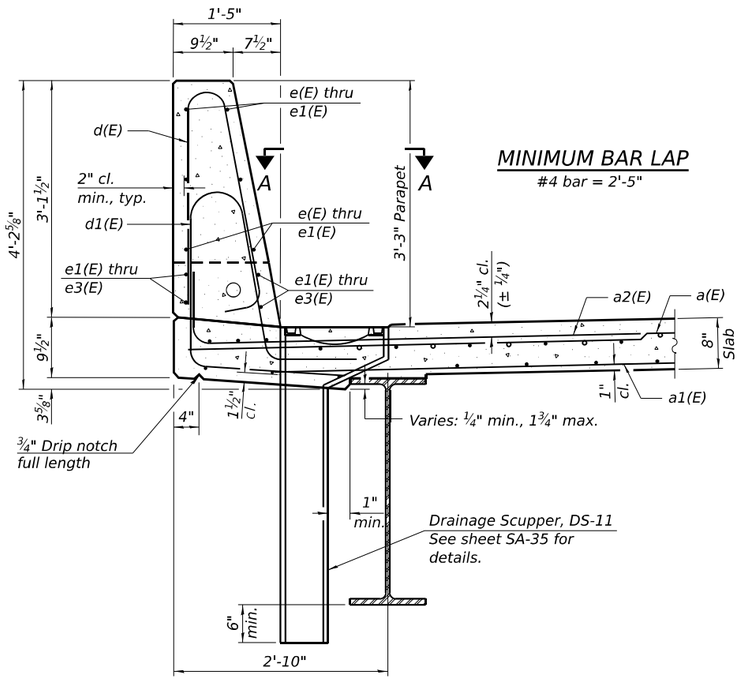

MINIMUM BAR LAP

#4 bar = 2'-5"

SECTION THRU PARAPET

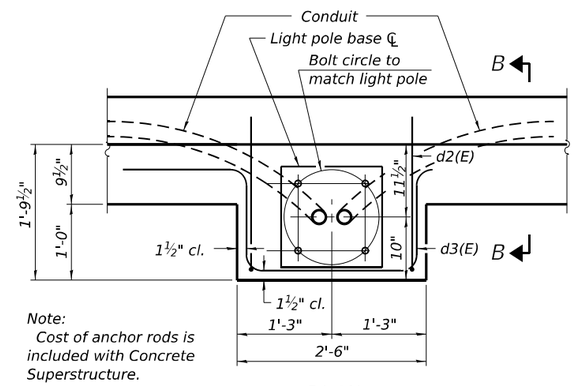

Note:
Cost of anchor rods is included with Concrete Superstructure.

PLAN

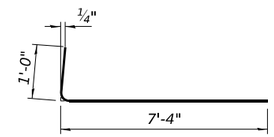

BAR a2(E)

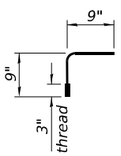

BAR c2(E)

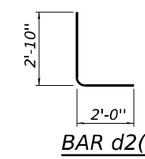

BAR d2(E)

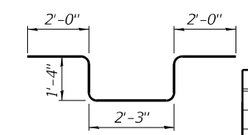

BAR d3(E)

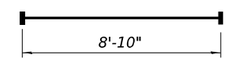

BAR m3(E)

(Headed 80 - #6 Bar Terminators)

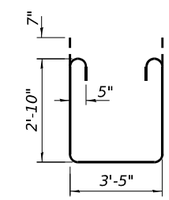

BAR s1(E)

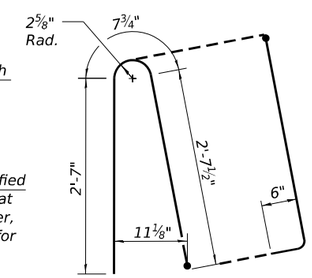

BAR d(E)

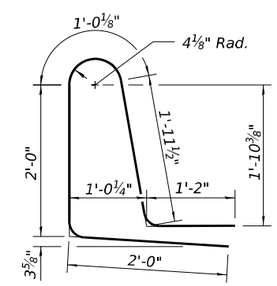

BAR d1(E)

SUPERSTRUCTURE BILL OF MATERIAL

Bar	No.	Size	Length	Shape
a(E)	598	#5	32'-5"	
a1(E)	478	#5	31'-5"	
a2(E)	696	#6	8'-4"	
a3(E)	114	#5	32'-5"	
a4(E)	92	#5	31'-5"	
a5(E)	16	#5	28'-0"	
a6(E)	48	#5	1'-6"	
b(E)	612	#5	29'-11"	
b1(E)	240	#6	29'-5"	
b2(E)	496	#5	33'-3"	
c1(E)	242	#5	2'-8"	
c2(E)	484	#5	1'-6"	
d(E)	726	#5	6'-5"	
d1(E)	726	#5	8'-2"	
d2(E)	6	#6	4'-10"	
d3(E)	12	#6	8'-11"	
e(E)	132	#4	16'-4"	
e1(E)	80	#4	14'-1"	
e2(E)	32	#4	26'-2"	
e3(E)	24	#4	29'-4"	
m(E)	40	#6	28'-5"	
m1(E)	16	#4	27'-8"	
m2(E)	40	#6	8'-10"	
m3(E)	40	#6	8'-10"	
m4(E)	6	#6	5'-5"	
m5(E)	4	#6	4'-11"	
m6(E)	10	#6	5'-0"	
s(E)	136	#5	11'-4"	
s1(E)	136	#5	10'-3"	
u(E)	136	#4	4'-8"	
Reinforcement Bars, Epoxy Coated			Pound	121,510
Concrete Superstructure			Cu Yd	573.7

Bars indicated thus 1 x 2-#4 etc. indicates 1 line of bars with 2 lengths per line.

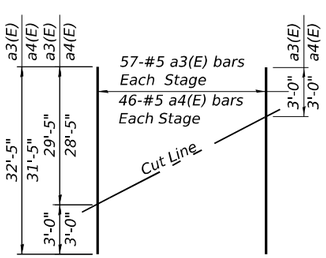

FIELD CUTTING DIAGRAM

Order a3(E) and a4(E) bars full length. Cut as shown and use remainder of bars in opposite end of deck.

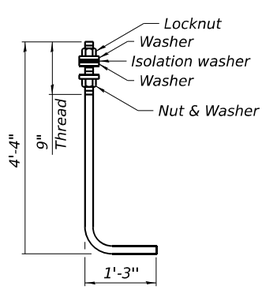

ANCHOR RODS

Diameter as specified for light poles. (ASTM F 1554 Grade 105) Full length hot dipped galvanized.

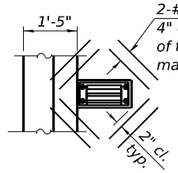

SECTION A-A

2-#5 a6(E) bars at 4" cts. Tied to bottom of top reinforcement mat. typ.

Note:
Cut longitudinal reinforcement to clear drainage scuppers.

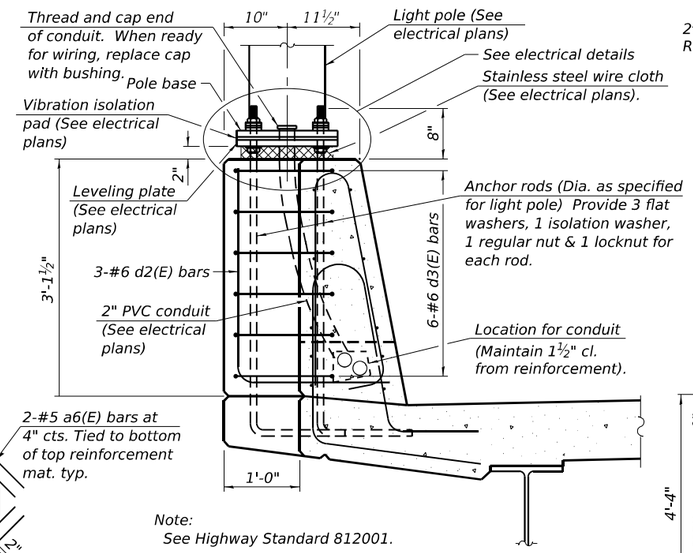

Note:
See Highway Standard 812001.

SECTION B-B

* Provide minimum 1.5 bolt diameters of thread length on each connecting end of the anchor rod.

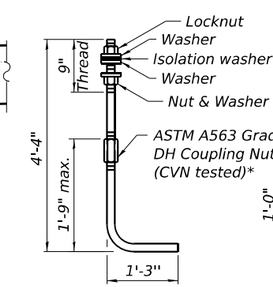

ALTERNATE ANCHOR ROD

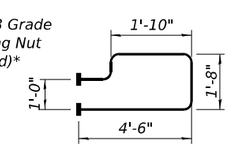

BAR s(E)

(Headed 272 - #5 Bar Terminators)

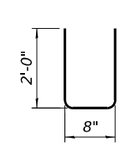

BAR u(E)

WSP USA Inc.
30 N. LASALLE STREET
SUITE 4200
CHICAGO, IL 60602
TEL: (312) 782-8150
FAX: (312) 782-1684

USER NAME = USSJ696614	DESIGNED - PP	REVISED -	
	CHECKED - LAS	REVISED -	
PLOT SCALE = 0.167 ' / in.	DRAWN - PP	REVISED -	
PLOT DATE = 4/22/2025	CHECKED - LAS	REVISED -	

STATE OF ILLINOIS
DEPARTMENT OF TRANSPORTATION

SUPERSTRUCTURE DETAILS
STRUCTURE NO. 099-0186

SHEET SA-15 OF SA-37 SHEETS

F.A.U RTE.	SECTION	COUNTY	TOTAL SHEETS	SHEET NO.
316	FAI 80 21 INTERCHANGE	WILL	1209	633
		CONTRACT NO. 62R22		
	ILLINOIS	FED. AID PROJECT		

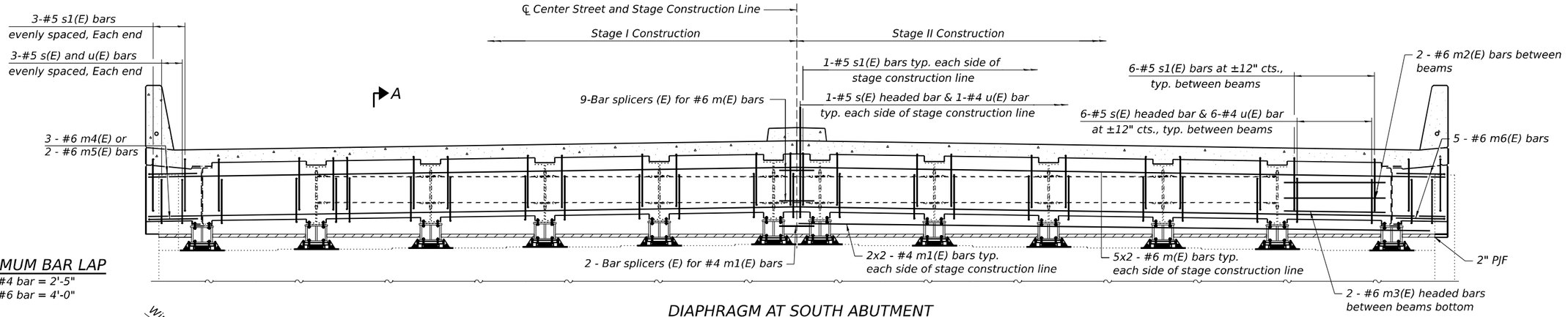

MINIMUM BAR LAP

#4 bar = 2'-5"
#6 bar = 4'-0"

DIAPHRAGM AT SOUTH ABUTMENT

(North abutment similar)

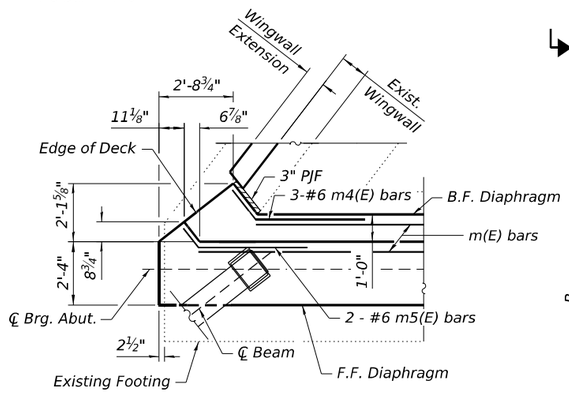

DIAPHRAGM CORNER DETAIL

(NW & SE Corner
Some Bars Omitted for Clarity)

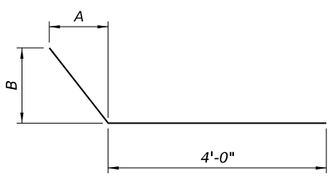

BAR m4(E), m5(E), & m6(E)

See table for A & B dimensions

A & B DIMENSIONS

Bar	A	B
m4(E)	10⅜"	1'-1¼"
m5(E)	6⅝"	8⅜"
m6(E)	7½"	9⅜"

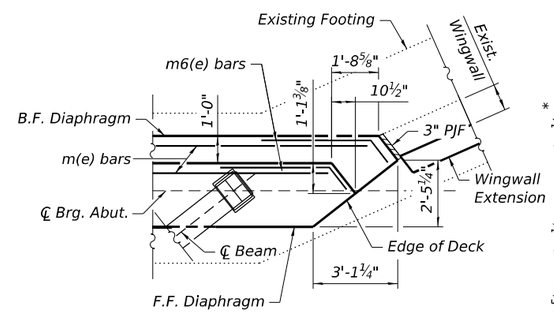

DIAPHRAGM CORNER DETAIL

(NE & SW Corner
Some Bars Omitted for Clarity)

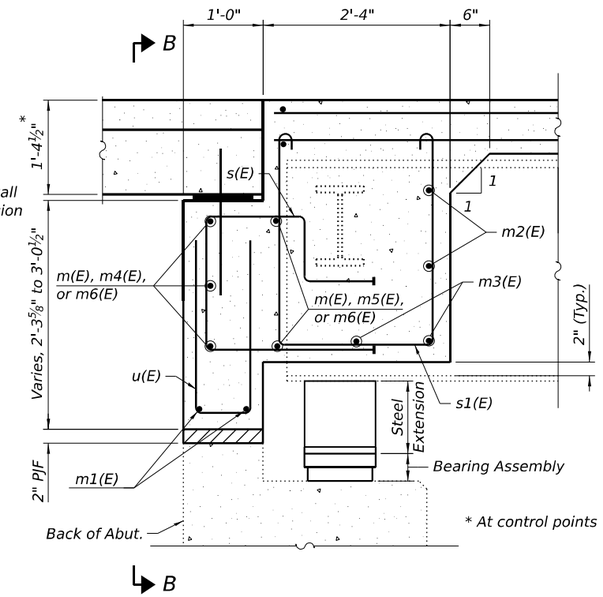

SECTION A-A

Horizontal dimensions at right angles

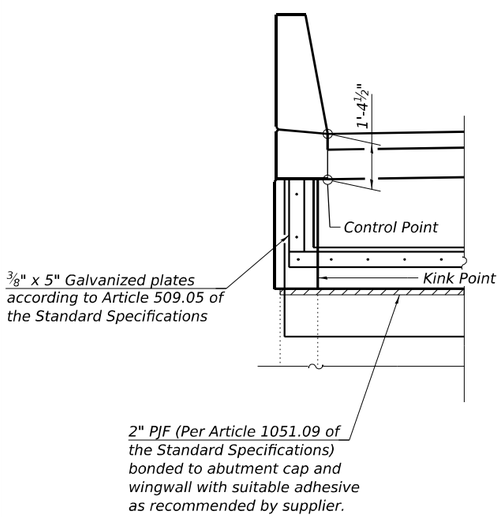

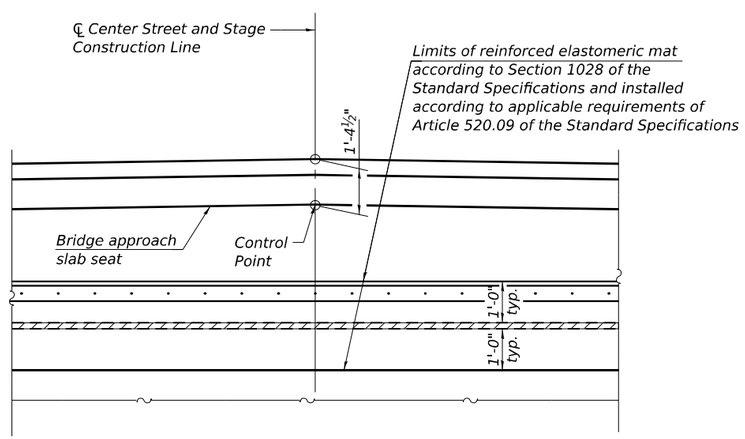

VIEW B-B

(Showing approach seat control locations. 2" PJF,
and limits of Fabric Reinforced Elastomeric Mat)

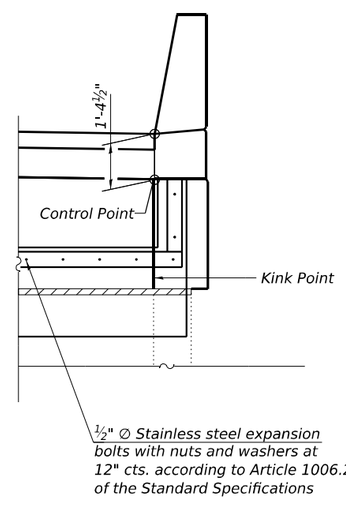

NOTES:

1. See sheet SA-15 for superstructure details, preformed joint filler details, and Bill of Material.
2. The s(E), s1(E), and u(E) bars shall be placed parallel to the beams.
3. Spacing for these bars shall be at right angles to the beams.
4. The approach slab seat shall have a constant slope determined from the control points shown.
5. Cost of fabric reinforced elastomeric mat, galvanized plate, stainless steel expansion bolts with nuts and washers and installation are included in the cost of Concrete Superstructure.

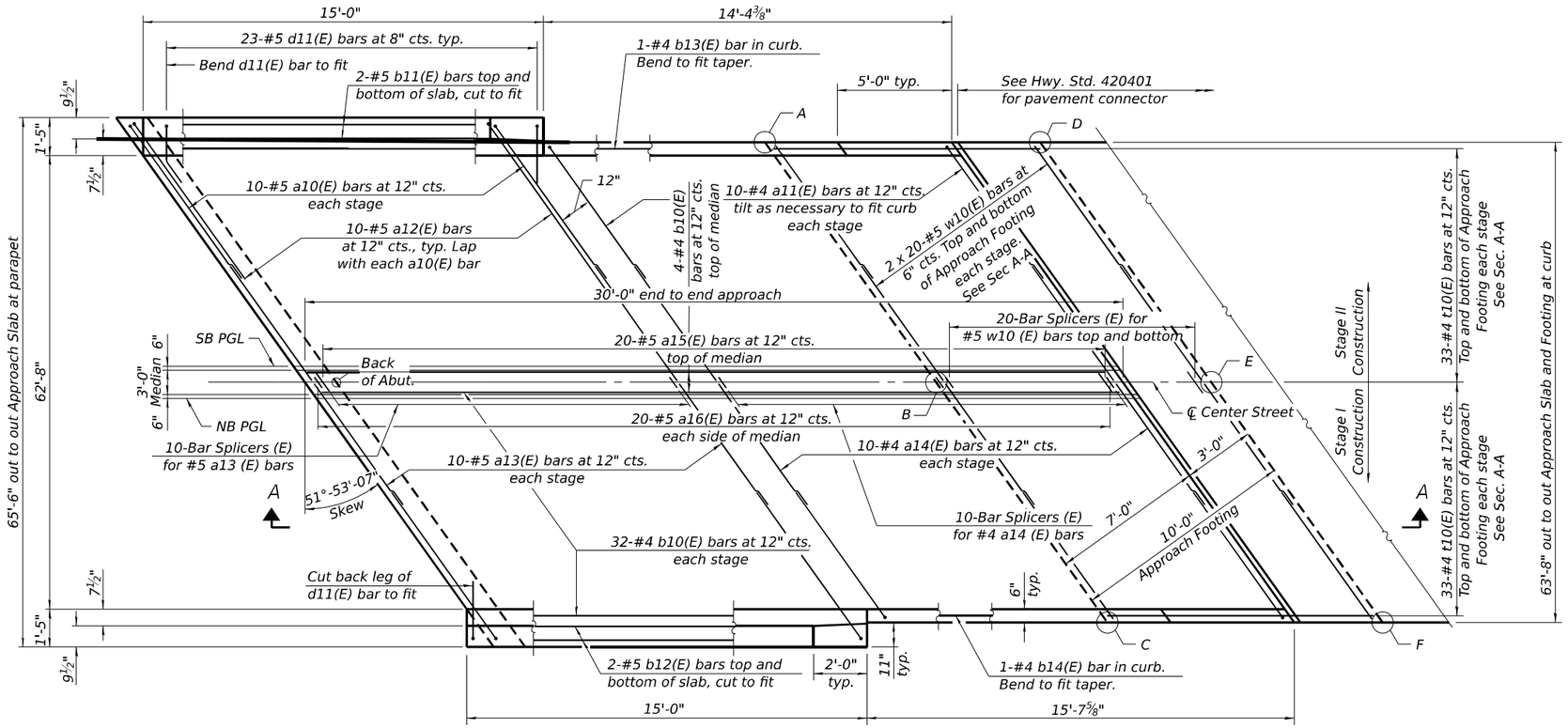

PLAN

(North approach slab shown; South approach slab similar by 180° rotation)

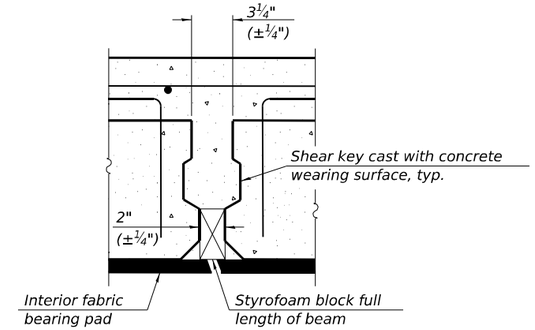

DETAIL 'A'

TOP AND BOTTOM ELEVATIONS FOR APPROACH FOOTING

South Approach			North Approach		
Point/ Location	Top	Bottom	Point/ Location	Top	Bottom
A - NE	605.92	605.09	A - SW	601.90	601.06
B - N℄	606.75	605.92	B - S℄	601.05	600.22
C - NW	606.60	605.77	C - SE	599.04	598.20
D - SE	606.08	605.24	D - NW	601.39	600.56
E - S℄	606.88	606.05	E - N℄	600.46	599.63
F - SW	606.71	605.88	F - NE	598.41	597.58

* Fabric bearing pads at the expansion end shall be recessed ¼" into the approach footing and bonded. Adjusting shims, when required, shall be bonded to the top of the fabric bearing pads.

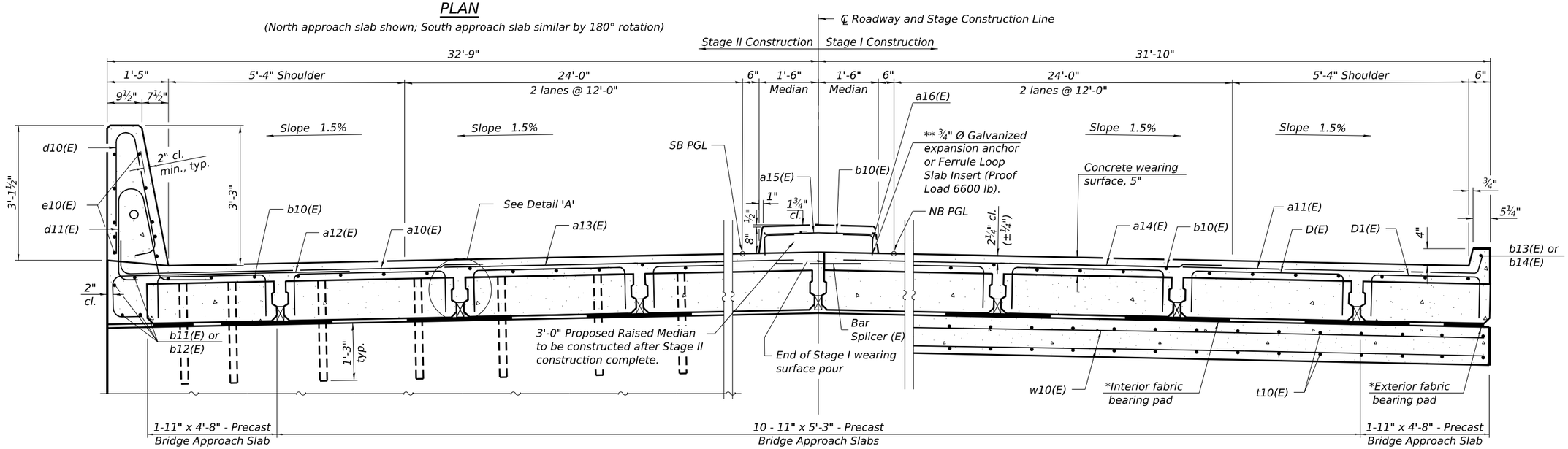

NEAR ABUTMENT

AT APPROACH FOOTING

** The cost of expansion anchors/inserts is included in the cost of Reinforcement Bars, Epoxy Coated.

CROSS SECTION

(Looking North)

(Sheet 1 of 3)

WSP USA Inc.
30 N. LASALLE STREET
SUITE 4200
CHICAGO, IL 60602
TEL: (312) 782-8150
FAX: (312) 782-1684

USER NAME = USSJ696614	DESIGNED - MEA	REVISED -	
	CHECKED - LAS	REVISED -	
PLOT SCALE = 0.16666000 ' / in.	DRAWN - MEA	REVISED -	
PLOT DATE = 4/22/2025	CHECKED - LAS	REVISED -	

STATE OF ILLINOIS
DEPARTMENT OF TRANSPORTATION

PRECAST BRIDGE APPROACH SLAB
STRUCTURE NO. 099-0186

SHEET SA-17 OF SA-37 SHEETS

F.A.U RTE.	SECTION	COUNTY	TOTAL SHEETS	SHEET NO.
316	FAI 80 21 INTERCHANGE	WILL	1209	635
		CONTRACT NO. 62R22		
		ILLINOIS	FED. AID PROJECT	

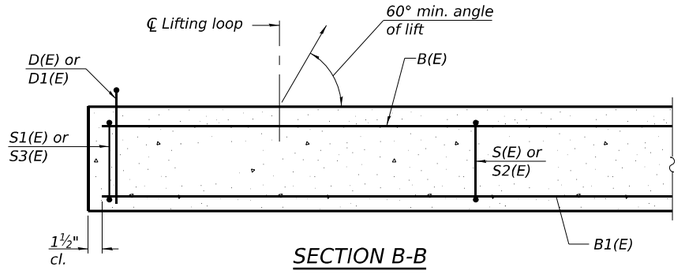

SECTION B-B

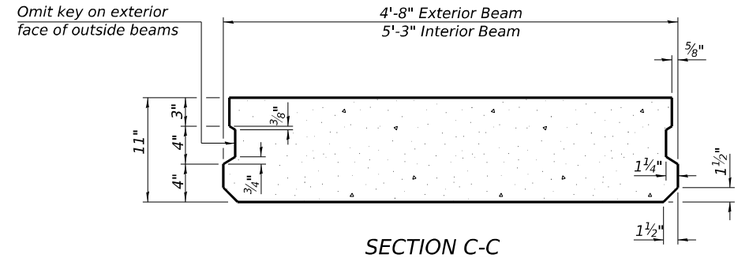

SECTION C-C
(Showing dimensions)

Notes:
The precast bridge approach slab shall be according to Section 504 of the Standard Specifications and shall be paid for at the contract unit price per square foot for Precast Bridge Approach Slab.
Cast-in-place substitution of Precast Bridge Approach Slab is not allowed.
The top surface of precast bridge approach slabs shall be finished similar to precast prestressed deck beams with concrete wearing surface as specified in the IDOT "Manual for Fabrication of Precast Prestressed Concrete Products."
Two ⅛" fabric adjusting shims of the dimensions of the exterior bearing pad shall be provided for each bearing pad location. Cost included with Precast Bridge Approach Slab.
A minimum 2½" Ø lifting pins shall be used to engage the lifting loops during handling.
Compressive strength of precast concrete, f'c shall be 6,000 psi.
Compressive strength of precast concrete during initial lifting, f'ci shall be 5,000 psi.

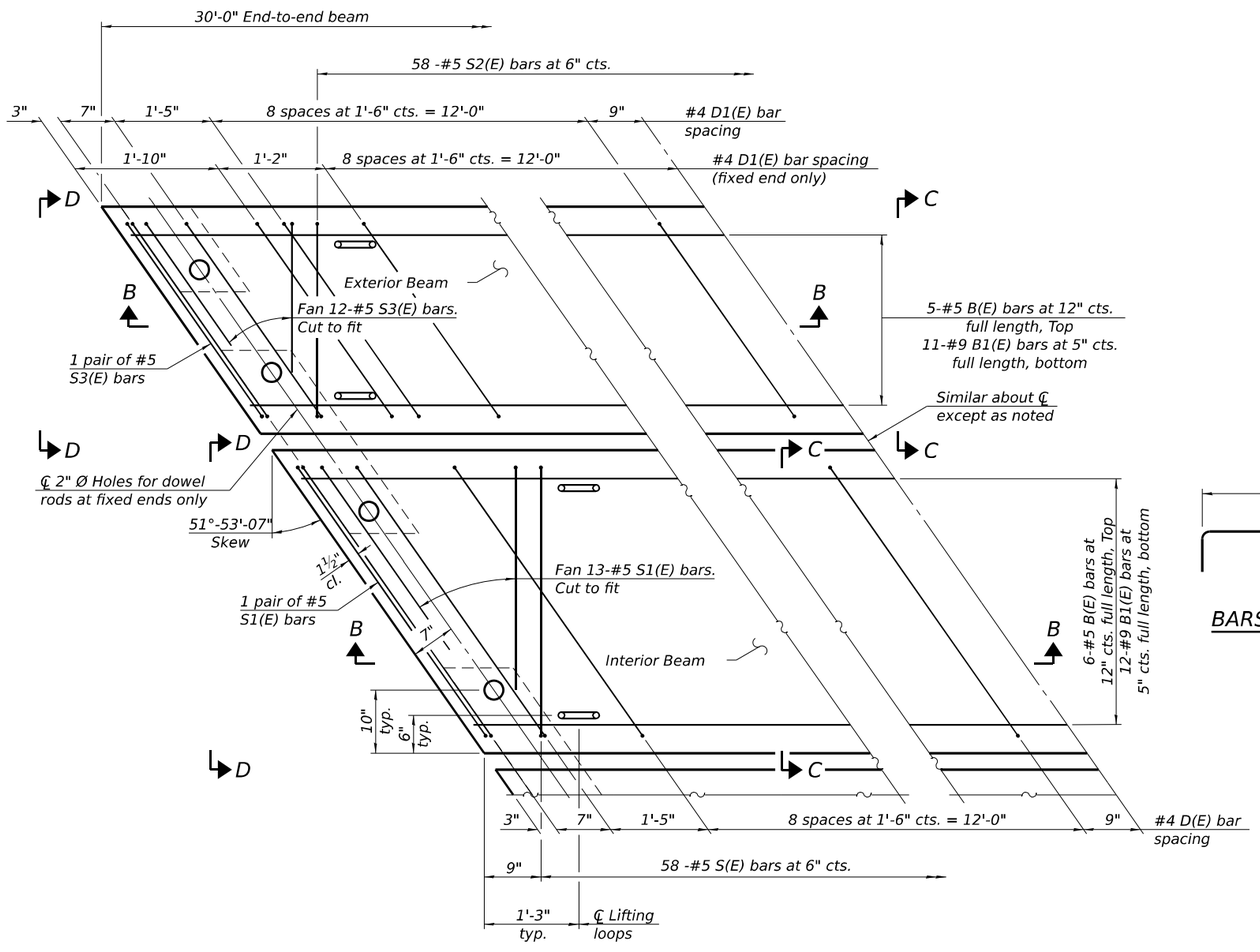

PLAN VIEW
(showing precast bridge approach beams)
(Spacing of D(E) and D1(E) bars may be adjusted up to 3" to miss the dowel rod holes and the lifting loops at the beam ends)

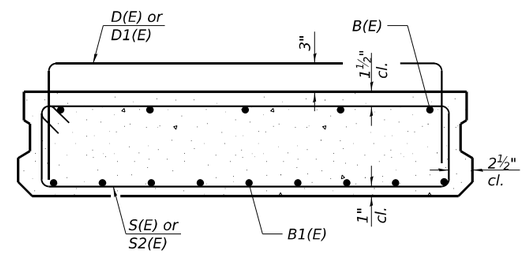

SECTION C-C
(Showing reinforcement)

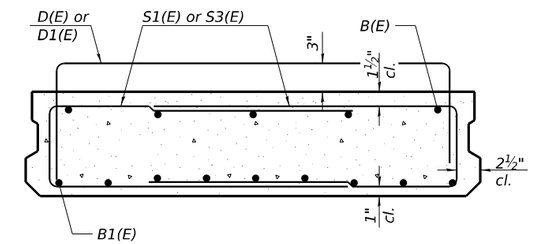

VIEW D-D
(Showing reinforcement)

BARS D(E) & D1(E)

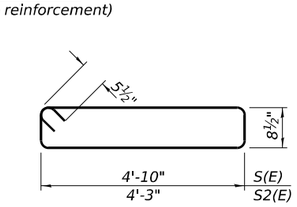

BARS S(E) & S2(E)

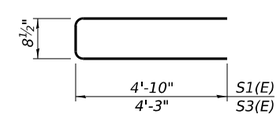

BARS S1(E) & S3(E)

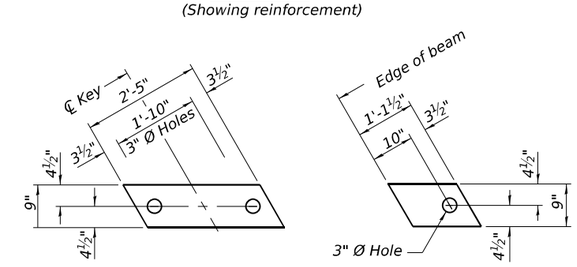

FABRIC BEARING PAD

Notes:
Bearing pads at fixed end shall be ½" thick and bearing pads at expansion end shall be ¾" thick.
Omit holes for fabric bearing pads at approach slab footing end of beams.

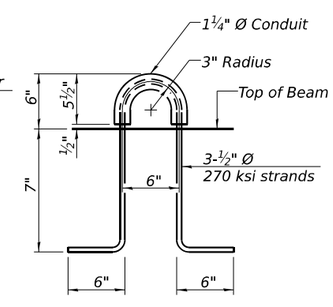

LIFTING LOOP DETAIL
(An alternate lifting loop with a proof load of 25,000 lbs. and utilized according to the manufacturer's recommendations may be used)

BAR LIST
EACH INTERIOR BEAM
(For information only)

Bar	No.	Size	Length	Shape
B(E)	6	#5	29'-8"	—
B1(E)	12	#9	29'-8"	—
D(E)	22	#4	9'-10"	⊓
S(E)	58	#5	12'-0"	⊏
S1(E)	30	#5	10'-5"	⊏

BAR LIST
EACH EXTERIOR BEAM
(For information only)

Bar	No.	Size	Length	Shape
B(E)	5	#5	29'-8"	—
B1(E)	11	#9	29'-8"	—
D(E)	32	#4	8'-10"	⊓
S2(E)	58	#5	10'-10"	⊏
S1(E)	28	#5	9'-3"	⊏

(Sheet 2 of 3)

WSP USA Inc.
30 N. LASALLE STREET
SUITE 4200
CHICAGO, IL 60602
TEL: (312) 782-8150
FAX: (312) 782-1684

USER NAME = USSJ696614	DESIGNED - MEA	REVISED -	
	CHECKED - LAS	REVISED -	
PLOT SCALE = 0.16666000 ' / in.	DRAWN - MEA	REVISED -	
PLOT DATE = 4/22/2025	CHECKED - LAS	REVISED -	

STATE OF ILLINOIS
DEPARTMENT OF TRANSPORTATION

PRECAST BRIDGE APPROACH SLAB
STRUCTURE NO. 099-0186

SHEET SA-18 OF SA-37 SHEETS

F.A.U RTE.	SECTION	COUNTY	TOTAL SHEETS	SHEET NO.
316	FAI 80 21 INTERCHANGE	WILL	1209	636
		CONTRACT NO. 62R22		
		ILLINOIS	FED. AID PROJECT	

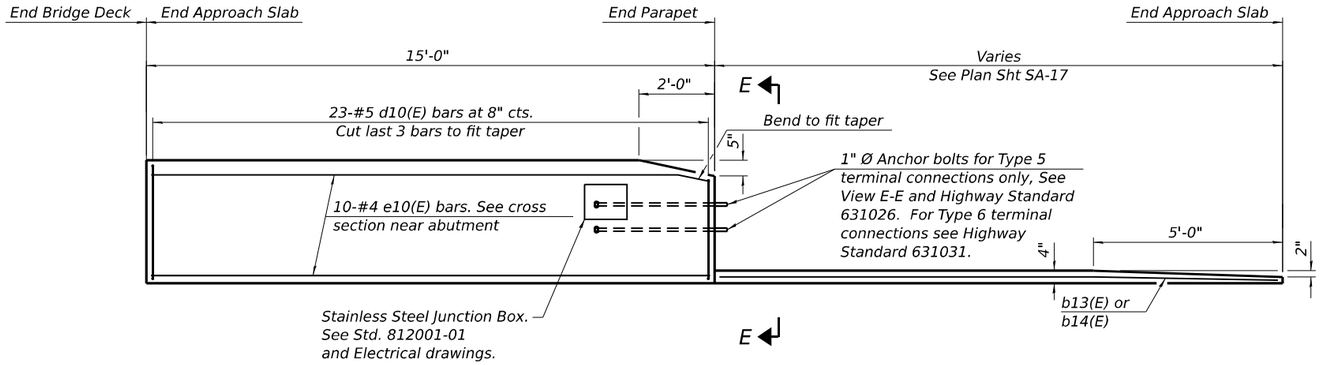

INSIDE ELEVATION OF PARAPET AND CURB

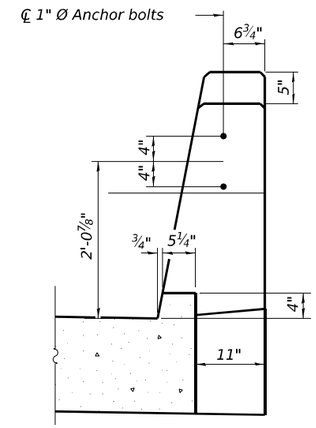

VIEW E-E

Notes:

The joint opening shall be adjusted for temperature per Article 520.04 of the Standard Specifications. However, since this detail is for jointless structures, the length of bridge used to calculate the adjustment shall be equal to half the total bridge length plus the length of the bridge approach slab.

After precast bridge approach slabs have been erected, holes shall be drilled into abutment and anchor dowels placed. Dowel holes shall be filled with non-shrink grout to top of precast slab and cured according to Article 1020.13(a)(3) or 1020.13(a)(5) of the Standard Specifications for a minimum of 24 hours before casting the shear keys and wearing surface.

Any concrete poured monolithically with the wearing surface, such as curbs, shall not be paid for separately, but will be included in the cost of Concrete Wearing Surface, 5".

The strip seal shall extend 6" beyond the edge of the approach slab on each end.

Parapet and median concrete shall be paid for as Concrete Superstructure.

Approach footing concrete shall be paid for as Concrete Structures.

The approach footing maximum applied service bearing pressure (Qmax) = 2.0 ksf.

Cost of excavation for approach footing included with Concrete Structures.

For Granular Backfill for Structures and drainage treatment details, see sheet SA-2 of SA-35.

Cost of cellular polystyrene is included with Concrete Superstructure.

Median to be constructed after Stage II is completed.

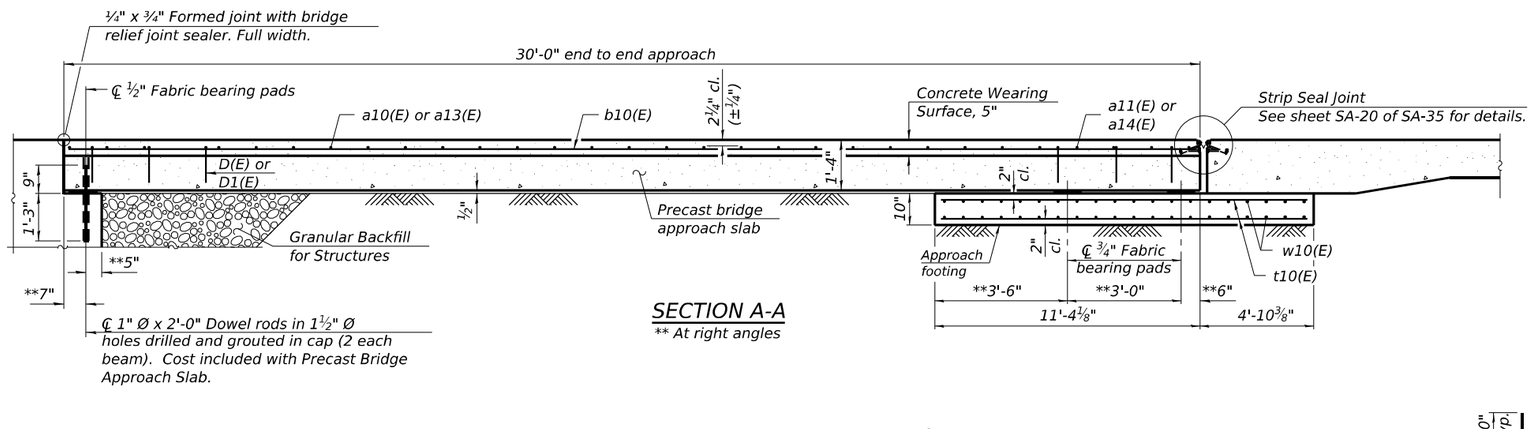

SECTION A-A

** At right angles

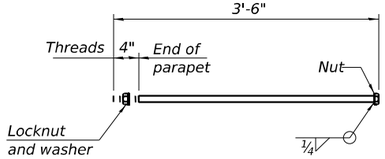

1" Ø ANCHOR BOLT

(Anchor bolt assemblies shall be galvanized according to Article 1006.09 of the Standard Specifications.
Cost of anchor bolt assemblies included with Concrete Superstructure)

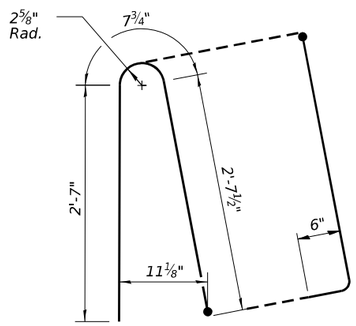

BAR d10(E)

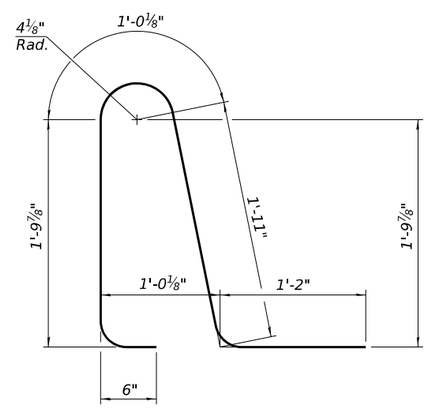

BAR d11(E)

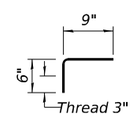

BAR a16(E)

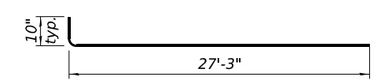

BAR a10(E)

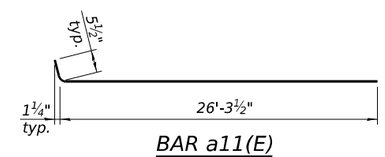

BAR a11(E)

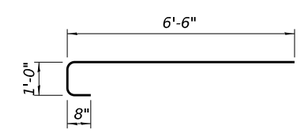

BAR a12(E)

TWO APPROACHES BILL OF MATERIAL

Bar	No.	Size	Length	Shape
a10(E)	40	#5	28'-1"	
a11(E)	40	#4	26'-9"	
a12(E)	40	#5	8'-2"	
a13(E)	40	#5	27'-3"	
a14(E)	40	#4	26'-4"	
a15(E)	40	#5	4'-4"	
a16(E)	80	#5	1'-3"	
b10(E)	136	#4	29'-8"	
b11(E)	8	#5	16'-5"	
b12(E)	8	#5	14'-8"	
b13(E)	2	#4	14'-0"	
b14(E)	2	#4	15'-4"	
d10(E)	92	#5	6'-5"	
d11(E)	92	#5	6'-5"	
e10(E)	40	#4	14'-8"	
t10(E)	264	#4	15'-8"	
w10(E)	160	#5	26'-6"	
Concrete Superstructure			Cu. Yd.	12.4
Concrete Structures			Cu. Yd.	63.7
Reinforcement Bars, Epoxy Coated			Pound	16,150
Precast Bridge Approach Slab			Sq. Ft.	3,820
Concrete Wearing Surface, 5"			Sq. Yd.	422

(Sheet 3 of 3)

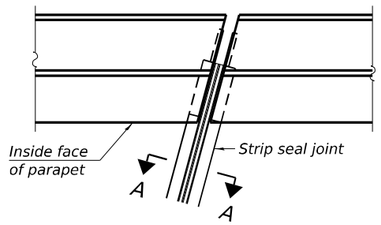

FOR SKEWS ≤ 30°

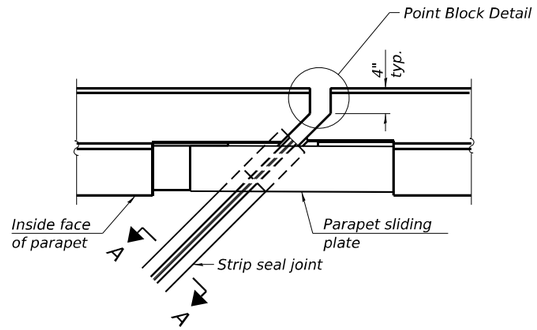

FOR SKEWS > 30°

PLAN AT PARAPET

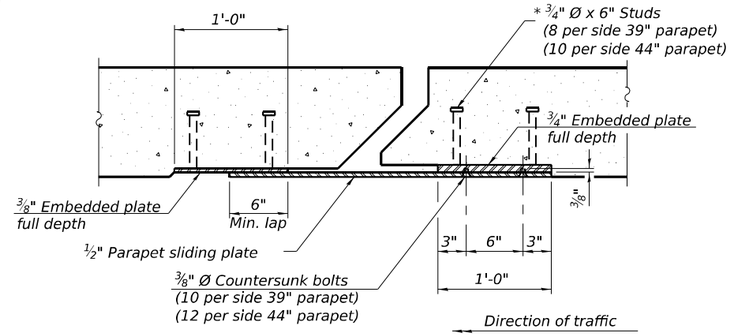

SECTION B-B

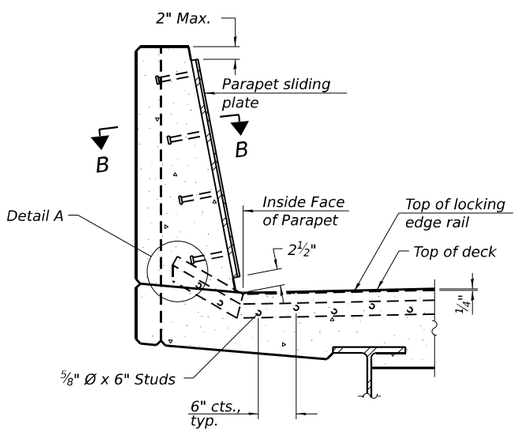

SECTION AT PARAPET

(Skews > 30° shown. Skews ≤ 30° similar except as shown in plan view.)

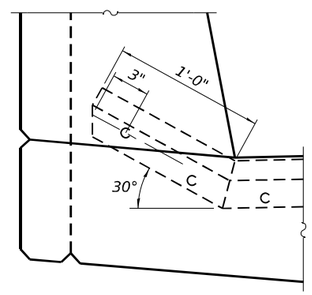

DETAIL A

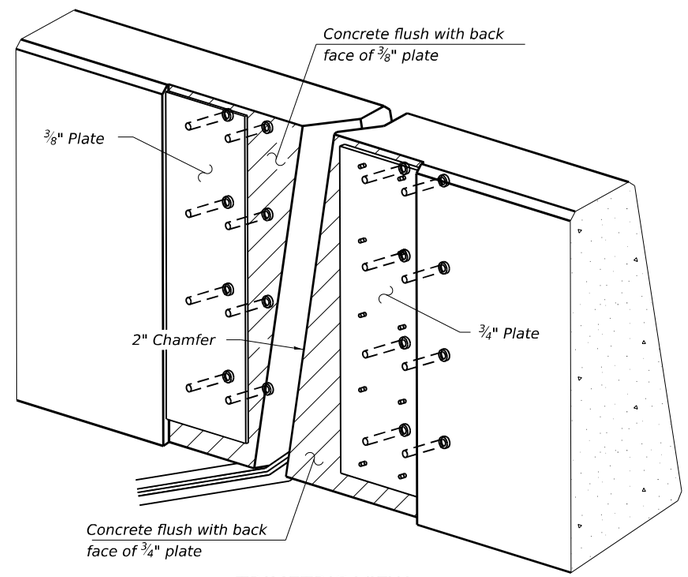

TRIMETRIC VIEW

(Showing embedded plates only)

Notes:

The strip seal shall be made continuous and shall have a minimum thickness of ¼". The configuration of the strip seal shall match the configuration of the locking edge rails. Open or "webbed" strip seal gland configurations are not permitted. The gland shall be sized for a maximum rated movement of 4 inches.

The locking edge rails depicted are configured for typical applications and are conceptual only. The actual configuration of the locking edge rails and matching strip seal may vary from manufacturer to manufacturer provided they fit the application and meet the minimum anchorage shown. Flanged edge rails, however, will not be allowed. Locking edge rails may exceed the 4½" maximum depth provided the anchorage system is revised according to the manufacturer's recommendation.

The manufacturer's recommended installation methods shall be followed.

All steel components shall be galvanized after fabrication according to Article 520.03 of the Standard Specifications.

The Maximum space between locking edge rail segments shall be 3/16" and sealed with a suitable sealant; however, any rail joint within 10' measured perpendicular to the face of the curb or parapet shall be welded as shown in the locking edge rail splice detail.

Cost of parapet sliding plates, embedded plates, and anchorage studs included with Preformed Joint Strip Seal.

39" constant slope barrier shown, 44" constant slope barrier similar as noted.

The concrete opening below the strip seal will vary based on the locking edge rail chosen by the Contractor. Deck and parapet lengths shown elsewhere in the plans are dimensioned to the concrete opening, not the joint opening, and are based on the rolled locking edge rail. If the Contractor elects to use a different locking edge rail, dimensional adjustments may be required. One exception to this would be the strip seal joint at the end of the precast bridge approach slab. For these cases the pavement connector length shall be adjusted, not the length of the bridge approach slab.

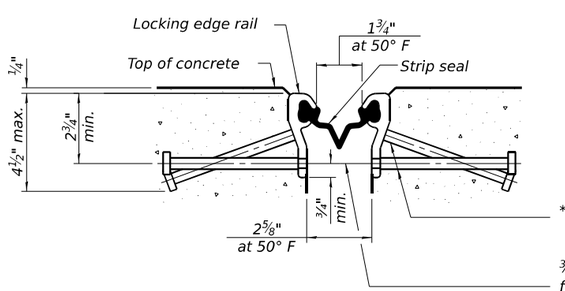

SHOWING ROLLED RAIL JOINT

* ⅝" Ø x 6" studs @ 6" cts. (alternate angled/bent studs with horizontal studs)

⅜" ϕ threaded rods in 7/16" ϕ holes at ±4'-0" cts. for holding the proper joint opening based on the temperature during the deck pour. Place to miss studs. All rods shall be burned, or sawed off flush with the plates after concrete is set.

SECTION A-A

* Granular or solid flux filled headed studs conforming to Article 1006.32 of the Std. Specs., automatically end welded.

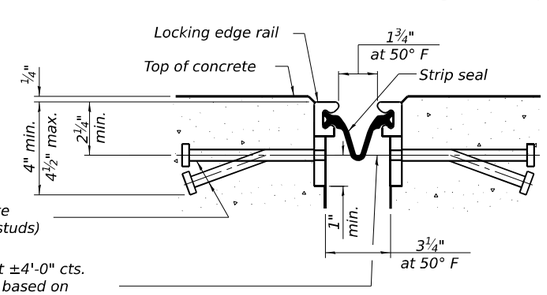

SHOWING WELDED RAIL JOINT

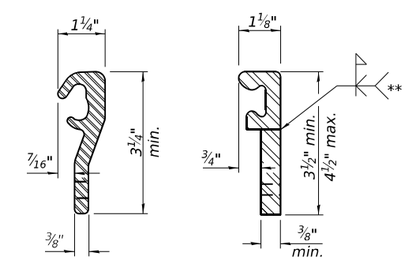

ROLLED (EXTRUDED) RAIL

WELDED RAIL

LOCKING EDGE RAILS

** Back gouge not required if complete joint penetration is verified by mock-up.

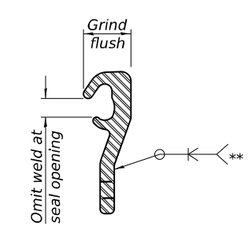

LOCKING EDGE RAIL SPLICE

The inside of the locking edge rail groove shall be free of weld residue. Rolled rail shown, welded rail similar.

BILL OF MATERIAL

Item	Unit	Total
Preformed Joint Strip Seal	Foot	206

EJ-SS 5-15-2023

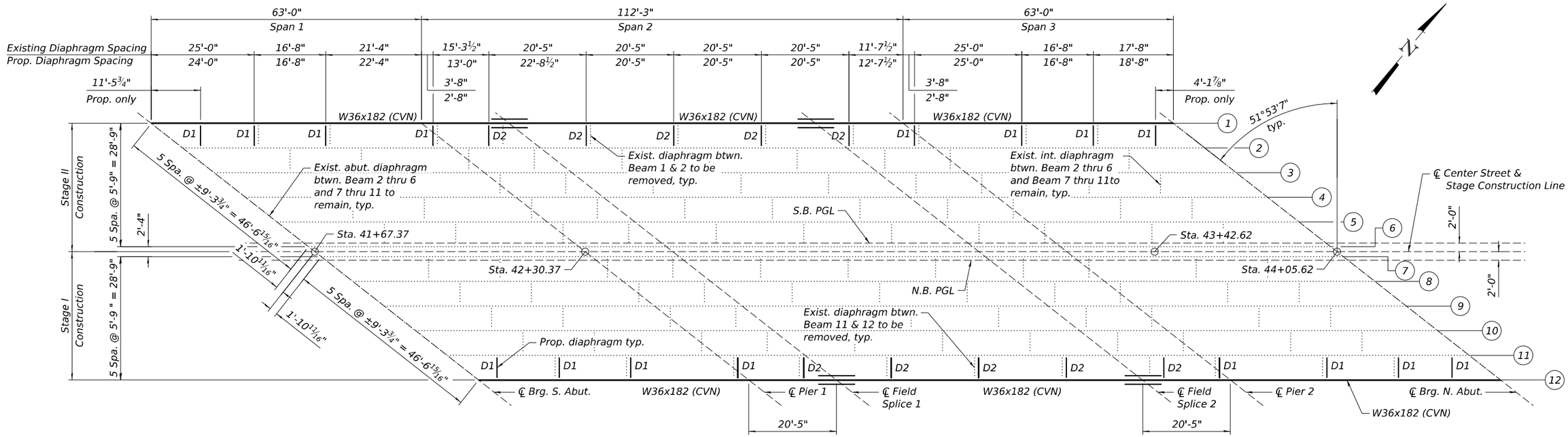

FRAMING PLAN

EXTERIOR BEAM MOMENT TABLE		0.4 Sp. 1 or 0.6 SP. 3	Pier	0.5 Sp. 2
I_S	(in⁴)	11,300	11,300	11,300
$I_C(n)$	(in⁴)	27,781	--	27,781
$I_C(3n)$	(in⁴)	20,003	--	20,003
S_S	(in³)	623	623	623
$S_C(n)$	(in³)	892	--	892
Sc(3n)	(in³)	798	--	798
Z	(in³)	--	--	--
℘	(k/')	0.912	1.149	0.912
M℘	('k)	110	995	625
s ℘	(k/')	0.237	--	0.237
M_S ℘	('k)	40	--	190
M℄	('k)	379	364	654
M_{IM}	('k)	101	85	137
⅗ [M℄ + I]	('k)	800	748	1318
M_a	('k)	1,235	2,266	2,773
* M_u	('k)	--	--	--
f_s ℘ non-comp	(ksi)	2.1	19.2	12.0
f_s ℘ (comp)	(ksi)	0.6	--	2.9
fs ⅗ [M℄+ M_{IM}]	(ksi)	10.8	14.4	17.7
f_s (Overload)	(ksi)	13.5	33.6	32.6
** f_s (Total)	(ksi)	17.5	43.7	42.4
VR	(k)	42.6	42.9	42.9

INTERIOR BEAM MOMENT TABLE		0.4 Sp. 1 or 0.6 SP. 3	Pier	0.5 Sp. 2
I_S	(in⁴)	9,040	18,027	15,550
$I_C(n)$	(in⁴)	24,862	--	34,878
$I_C(3n)$	(in⁴)	17,840	--	25,355
S_S	(in³)	504	942	826
$S_C(n)$	(in³)	764	--	1,114
Sc(3n)	(in³)	682	--	1,006
Z	(in³)	--	--	--
℘	(k/')	0.764	1.09	0.830
M℘	('k)	82	954	571
s ℘	(k/')	0.237	--	0.237
M_S ℘	('k)	38	--	186
M℄	('k)	374	416	581
M_{IM}	('k)	98	128	123
⅗ [M℄ + I]	('k)	789	907	1,173
M_a	('k)	1,181	2,355	2,509
* M_u	('k)	--	--	--
f_s ℘ non-comp	(ksi)	1.9	11.5	8.3
f_s ℘ (comp)	(ksi)	0.7	--	2.2
fs ⅗ [M℄+ M_{IM}]	(ksi)	12.4	11.6	12.6
f_s (Overload)	(ksi)	15.0	23.1	23.2
** f_s (Total)	(ksi)	19.5	30.0	30.1
VR	(k)	52.2	51.2	39.6

* Compact section
** Braced non-compact and partially braced section

EXTERIOR BEAM REACTION TABLE		Abut.	Pier
R ℘	(k)	61.6	116.6
R ℄	(k)	28.9	47.5
R_I	(k)	7.7	11.2
R_{Total}	(k)	98.2	175.3

INTERIOR BEAM REACTION TABLE		Abut.	Pier
R ℘	(k)	58.9	105.7
R ℄	(k)	35.2	48.7
R_I	(k)	9.3	11.5
R_{Total}	(k)	103.4	165.9

Abutment R DL shown also includes tributary approach slab reaction, tributary weight of concrete diaphragm, and weight of steel extension.

Is, Ss: Non-composite moment of inertia and section modulus of the steel section used for computing fs (Total and Overload) due to non-composite dead loads (in.⁴ and in.³).

Ic(n), Sc(n): Composite moment of inertia and section modulus of the steel and deck based upon the modular ratio, "n", used for computing fs (Total and Overload) due to short-term composite live loads (in.⁴ and in.³).

Ic(3n), Sc(3n): Composite moment of inertia and section modulus of the steel and deck based upon 3 times the modular ratio, "3n", used for computing fs(Total and Overload) due to long-term composite (superimposed) dead loads (in.⁴ and in.³).

Z: Plastic Section Modulus of the steel section in non-composite areas (in.³).

℘: Un-factored non-composite dead load (kips/ft.).

M℘: Un-factored moment due to non-composite dead load (kip-ft.).

s ℘: Un-factored long-term composite (superimposed) dead load (kips/ft.)

M_S℘: Un-factored moment due to long-term composite (superimposed) dead load (kip-ft.).

M℄: Un-factored live load moment (kip-ft.).

M_{IM}: Un-factored moment due to impact (kip-ft.).

Ma: Factored design moment (kip-ft.).
1.3 [M ℘+ Ms℘+ ⅗ (M℄+ M_{IM})]

Mu: Compact composite moment capacity according to AASHTO LFD 10.50.1.1 or compact non-composite moment capacity according to AASHTO LFD 10.48.1 (kip-ft.).

fs (Overload): Sum of stresses as computed from the moments below (ksi).
M℘+ Ms℘+ ⅗ (M℄+ M_{IM})

fs (Total): Sum of stresses as computed from the moments below on non-compact section (ksi).
1.3 [M℘+ Ms℘+ ⅗ (M℄+ M_{IM})]

VR: Maximum℄+ impact shear range within the composite portion of the span for stud shear connector design (kips).

NOTES:

1. See sheet SA-22 for beam elevations.
2. See sheet SA-23 for diaphragm details and splice details.
3. All beams and splice plates shall be AASHTO M270 Grade 50.
4. All diaphragms shall be installed as steel is erected and secured with erection pins and bolts except as otherwise noted. Individual diaphragms at supports may be temporarily disconnected to install bearing anchor rods.
5. Load carrying components designated "CVN" shall conform to the Charpy-V-Notch Impact Impact Energy Requirement, Zone 2.

WSP USA Inc.
30 N. LASALLE STREET
SUITE 4200
CHICAGO, IL 60602
TEL: (312) 782-8150
FAX: (312) 782-1684

USER NAME = USSJ696614
PLOT SCALE = 23:11.9885 ':" / in.
PLOT DATE = 4/22/2025
DESIGNED - SJJ
CHECKED - PJL
DRAWN - SJJ
CHECKED - PJL
REVISED -
REVISED -
REVISED -
REVISED -

STATE OF ILLINOIS
DEPARTMENT OF TRANSPORTATION

FRAMING PLAN
STRUCTURE NO. 099-0186

SHEET SA-21 OF SA-35 SHEETS

F.A.U RTE.	SECTION	COUNTY	TOTAL SHEETS	SHEET NO.
316	FAI 80 21 INTERCHANGE	WILL	1209	639

CONTRACT NO. 62R22
ILLINOIS | FED. AID PROJECT

MODEL: Default
FILE NAME: pw://transystems-pw.bentley.com:transyscorp-pw1-hosted/Documents/Projects_2018/CH401/401180022/03-WSP/CAD/62R22-INT-1 (Center)/Sheets/Structural/SN-099-0186/0990186-62R22-SA-21-Framing Plan.dgn

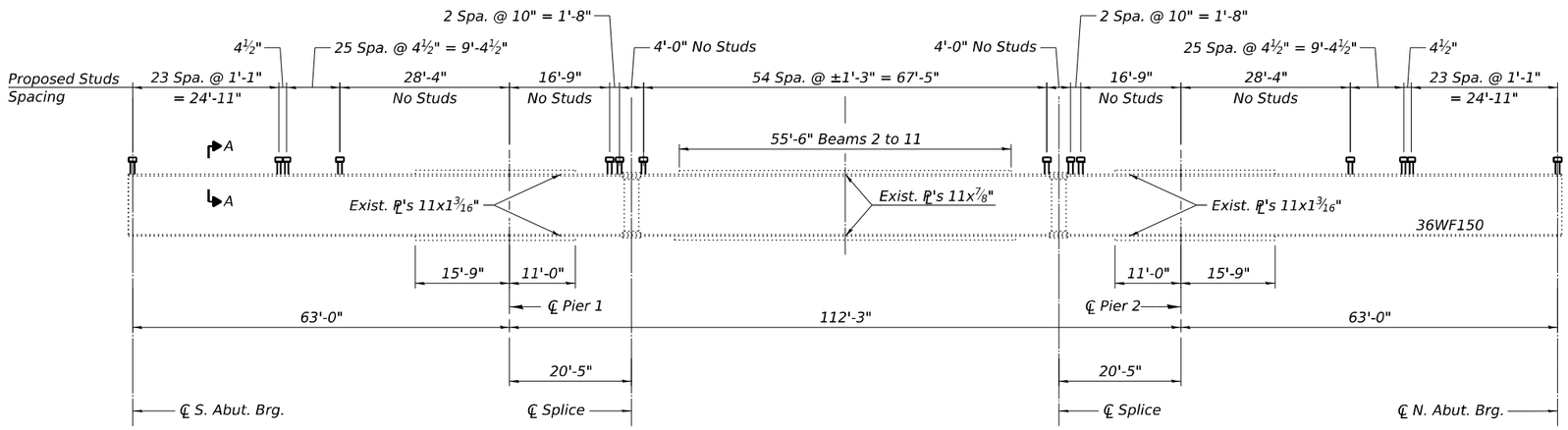

Note:
Adjust stud location in field as necessary at cover plate.
See Existing Cover Plate Detail on sheet SA-23.

EXISTING INTERIOR BEAM ELEVATION

(Showing Stud Shear Connectors Spacing Typical Beams 2 through 11)

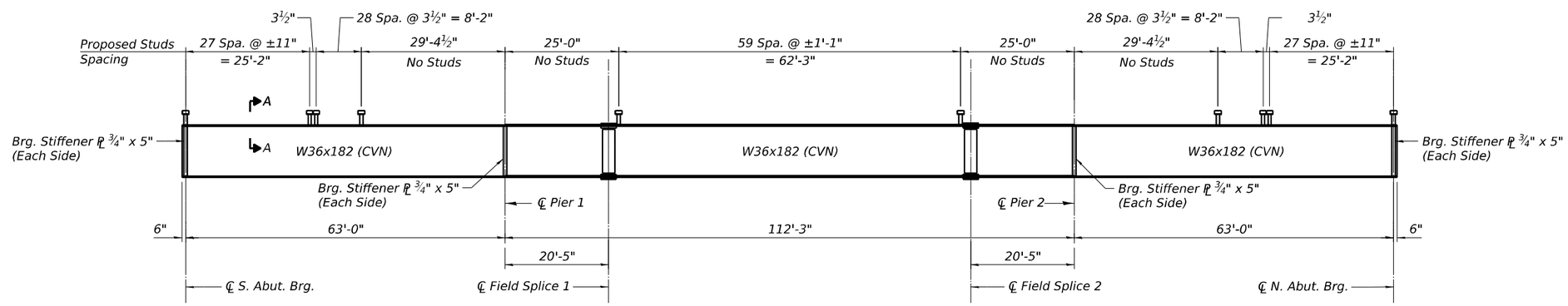

PROPOSED EXTERIOR BEAM ELEVATION

Load carrying components designated "CVN" shall conform to the Charpy-V-Notch Impact Energy Requirements, Zone 2

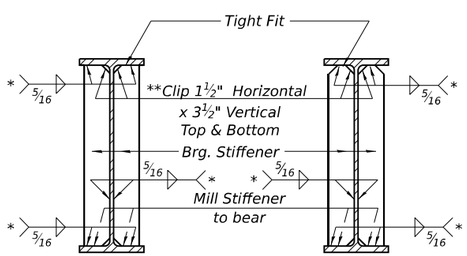

SECTION AT PIER

SECTION AT ABUTMENT

* Terminate ¼" (±⅛") from the end of plate intersects.
** Clip may be rounded for ease of shop painting.

TOP OF BEAM ELEVATIONS

(For Fabrication Only)

Location	℄ Brg. S. Abut.	℄ Pier 1	℄ Field Splice 1	℄ Field Splice 2	℄ Pier 2	℄ Brg. N. Abut.
Beam 1	607.12	606.55	606.36	605.18	604.68	603.13
Beam 12	606.43	605.41	605.08	603.35	602.68	600.63

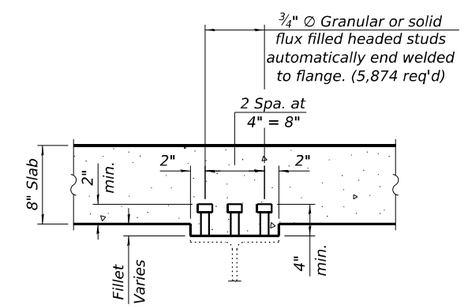

SECTION A-A

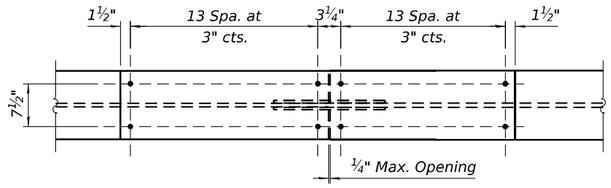

PLAN

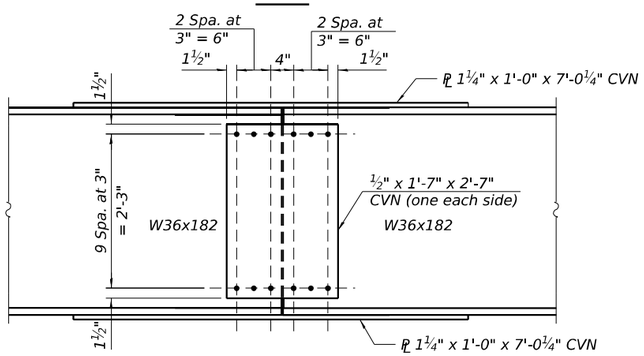

ELEVATION

TYPICAL SPLICE DETAIL

(4 Required)

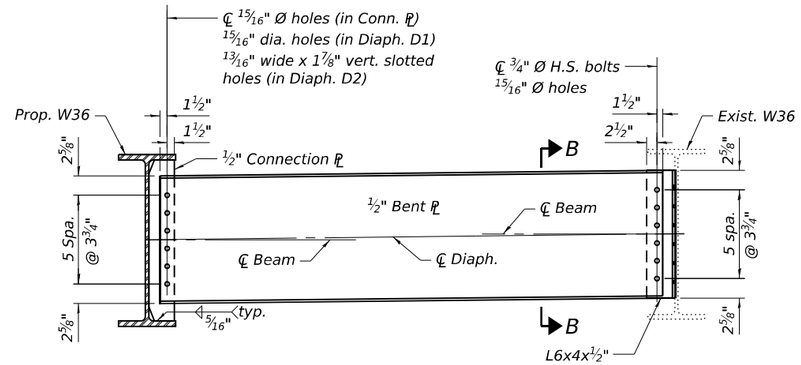

PROPOSED DIAPHRAGM D1 & D2

(16 - D1 Req'd)
(10 - D2 Req'd)

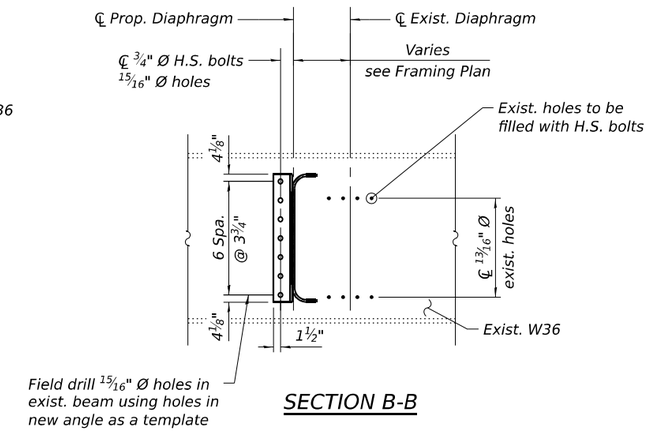

SECTION B-B

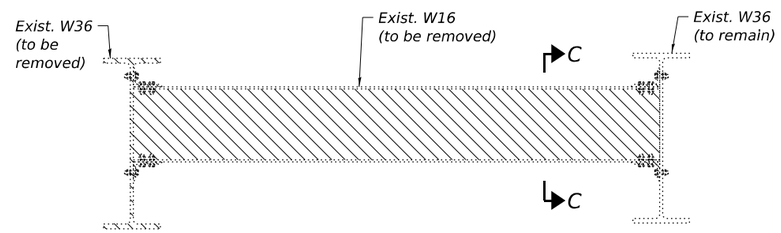

EXISTING DIAPHRAGM

(Interior diaphragm shown, abutment diaphragm similar)
(26 Locations)

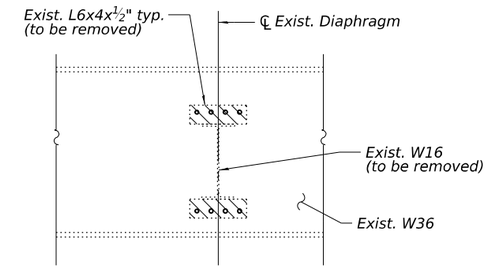

SECTION C-C

Notes:
Fasteners shall be ASTM F3125 Grade A325 Type 1, mechanically galvanized bolts in painted areas. Bolts ⅞" Ø, 15/16" Ø diameter.
Load carrying components designated "CVN" shall conform to the Charpy-V-Notch Impact Energy Requirements, Zone 2.

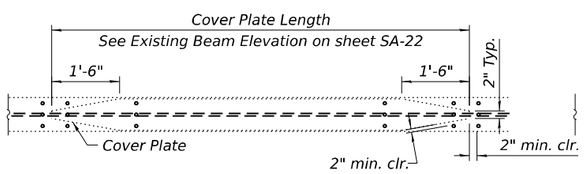

EXISTING COVER PLATE DETAIL

(Showing Stud Shear Connectors)

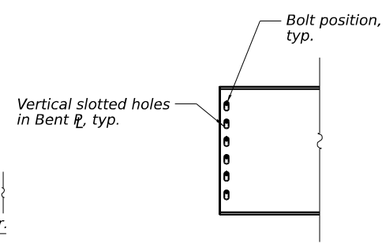

DIAPHRAGM D2 CONN. DETAIL
BEFORE PLACING CONCRETE SLAB

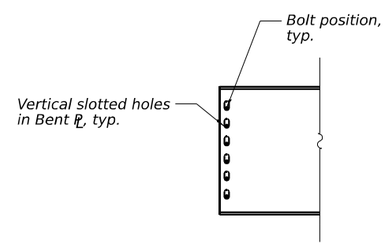

DIAPHRAGM D2 CONN. DETAIL
AFTER PLACING CONCRETE SLAB

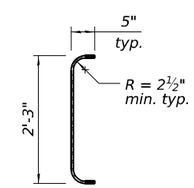

BENT PL DETAIL

NOTES:

1. For location proposed diaphragms, see sheet SA-21.
2. Two hardened washers required for each set of oversized holes.
3. All structural steel shall be AASHTO M270 Grade 50.
4. Cost of field drilling is included in Furnishing and Erecting Structural Steel.
5. Existing structural steel that will be in contact with new structural steel shall be cleaned and painted prior to erection as required by the Special Provision "Cleaning and Painting Contact Surface Areas of Existing Steel Structures." Cleaning and painting of contact surfaces as detailed on this sheet shall meet the requirements for Secondary Connections as specified in the Special Provision for "Cleaning and Painting Contact Surface Areas of Existing Steel Structures."

SUGGESTED SEQUENCE OF CONSTRUCTION FOR DIAPHRAGM D2

1. Before placing concrete slab, connect new diaphragm from proposed Beam 1 or 12 to existing Beam 2 or 11, respectively. Bolts in slots of diaphragm shall be finger tight until the pour is complete. Position slots so bolts start at one end with no concrete load and finish near the opposite end under deck load.
2. Set slab forms and place reinforcement.
3. Place concrete slab. Once Beam 1 or 12 deflects, tighten bolts as required.

BILL OF MATERIAL

Item	Unit	Quantity
Structural Steel Removal	Pound	104,230

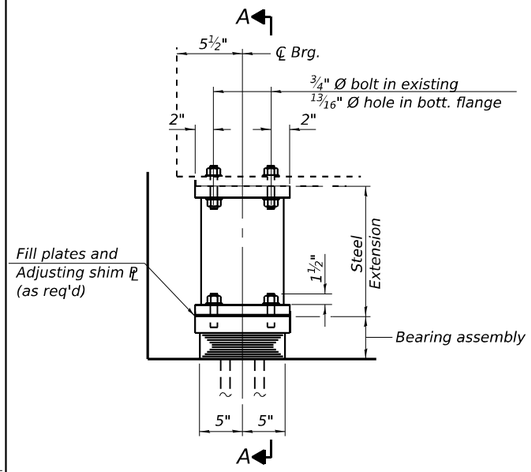

ELEVATION AT SOUTH ABUT.

(Bearing at existing beam shown, bearing at proposed beam similar)

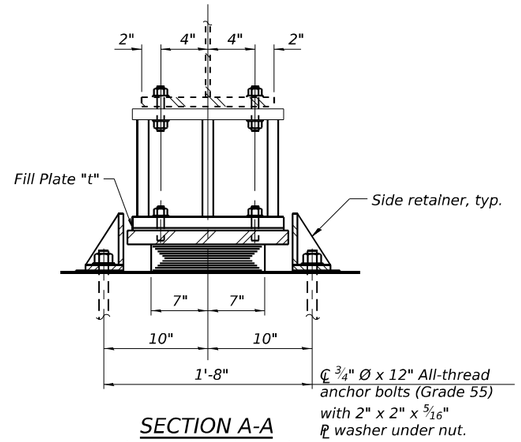

SECTION A-A

(Bearing at existing beam shown, bearing at proposed beam similar)

TYPE I ELASTOMERIC EXP. BRG.

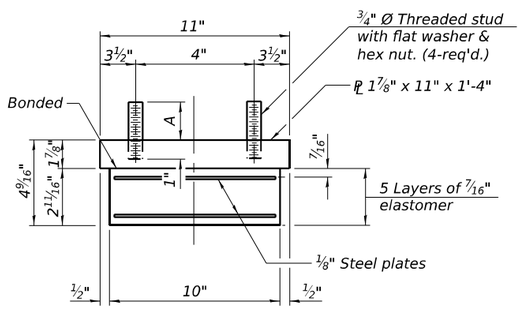

BEARING ASSEMBLY

Note:
Shim plates shall not be placed under bearing assembly.

Notes:
Side retainers and stainless steel plates shall be included in the cost of Elastomeric Bearing Assembly, Type I.
Anchor bolts and side retainers at all supports shall be installed as each member is erected unless an equivalent temporary means of lateral restraint is used.
Two ⅛ in. adjusting shims shall be provided for each bearing in addition to all other plates or shims and placed as shown on bearing details.
The steel extensions are being paid as "Furnishing and Erecting Structural Steel."

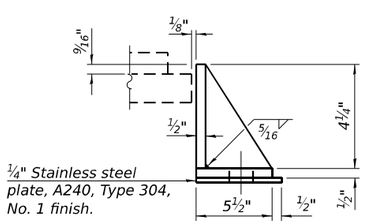

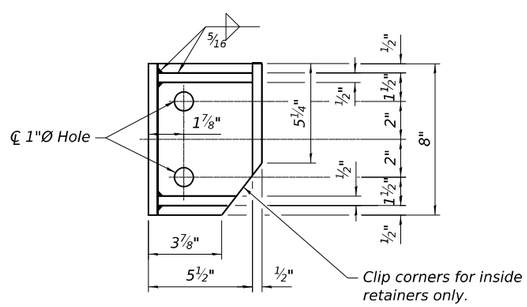

SIDE RETAINER

Equivalent rolled angle with stiffeners will be allowed in lieu of welded plates.

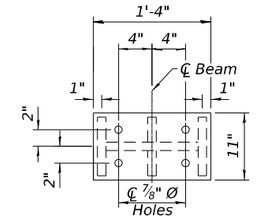

PLAN STEEL EXTENSION

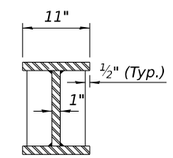

SECTION B-B

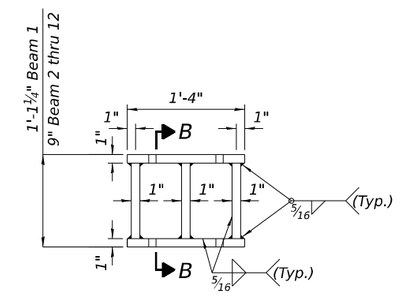

ELEVATION STEEL EXTENSION

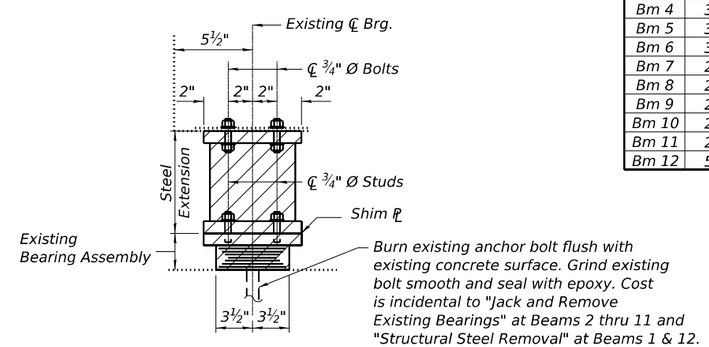

EXISTING BEARING REMOVAL

JACK & REMOVE EXISTING BEARING PROCEDURE

1. The Contractor shall submit for approval by the Engineer, plans for jacking existing beams and installing new bearings prior to commencing any related work. The dead load reaction per beam (weight of steel only) is 2 Tons at each abutment. Minimum Jack capacity is 4 Tons at each abutment.
2. Prior to ordering any material, the Contractor shall verify steel extension and fill plate thickness required at each bearing.
3. Jacking and removing existing bearings shall be done after the existing deck is removed and prior to placing the new deck.
4. Jacking lifts shall be limited in accordance with the Special Provision "Jack and Remove Existing Bearings".
5. The new bearings, plates, and steel extensions shall be in place and the jack shall be lowered before the new concrete deck is poured.

STUD HEIGHT "A" DIMENSION

Beam	A
Bm 1	2¾"
Bm 2	2¾"
Bm 3	3¼"
Bm 4	3¼"
Bm 5	3½"
Bm 6	3½"
Bm 7	2¾"
Bm 8	2¾"
Bm 9	2¾"
Bm 10	2¾"
Bm 11	2¾"
Bm 12	5½"

FILL PLATE THICKNESS

Beam	t
Bm 1	-
Bm 2	-
Bm 3	⅜"
Bm 4	½"
Bm 5	¾"
Bm 6	¾"
Bm 7	-
Bm 8	-
Bm 9	-
Bm 10	-
Bm 11	-
Bm 12	2 9/16"

BILL OF MATERIAL

Item	Unit	Total
Elastomeric Bearing Assembly Type I	Each	12
Anchor Bolts ¾"	Each	48
Jack and Remove Existing Bearings	Each	10
Structural Steel Removal	Pound	270

WSP USA Inc.
30 N. LASALLE STREET
SUITE 4200
CHICAGO, IL 60602
TEL: (312) 782-8150
FAX: (312) 782-1684

USER NAME = USSJ696614	DESIGNED - LAS	REVISED -	
	CHECKED - MS	REVISED -	
PLOT SCALE = 0.167 ' / in.	DRAWN - MA	REVISED -	
PLOT DATE = 6/10/2025	CHECKED - LAS	REVISED -	

STATE OF ILLINOIS
DEPARTMENT OF TRANSPORTATION

TYPE I ELASTOMERIC BEARINGS - SOUTH ABUTMENT
STRUCTURE NO. 099-0186

SHEET SA-24 OF SA-37 SHEETS

F.A.U RTE.	SECTION	COUNTY	TOTAL SHEETS	SHEET NO.
316	FAI 80 21 INTERCHANGE	WILL	1209	642
		CONTRACT NO. 62R22		
		ILLINOIS	FED. AID PROJECT	

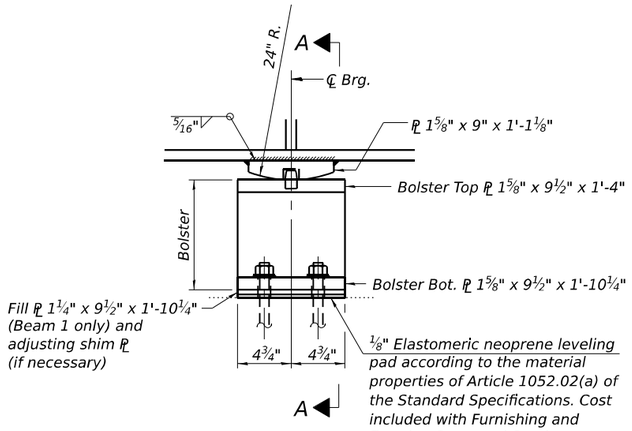

ELEVATION

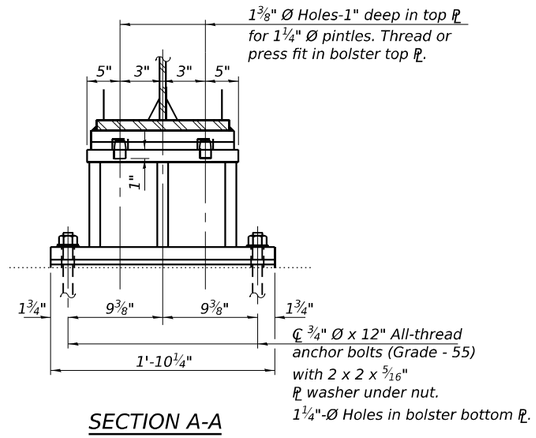

SECTION A-A

FIXED BEARING - PIER 1

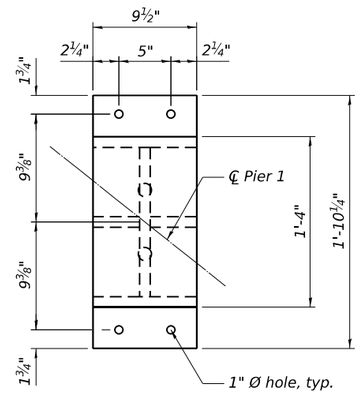

PLAN BOLSTER

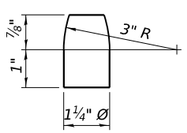

PINTLE

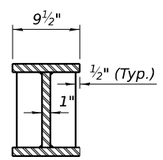

SECTION B-B

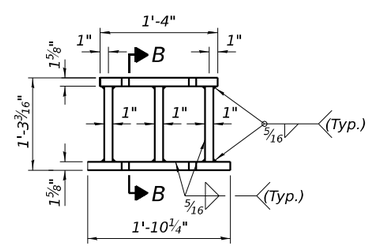

ELEVATION BOLSTER

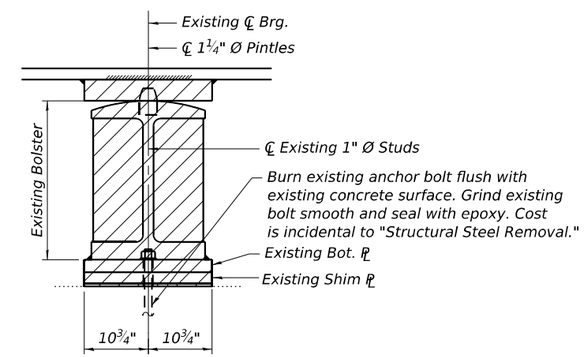

EXISTING BEARING REMOVAL - BEAM 1 & 12

Note:
The cost of removal is included in
Structural Steel Removal.

BILL OF MATERIAL

Item	Unit	Total
Anchor Bolts, 3/4"	Each	8
Structural Steel Removal	Pound	570

WSP USA Inc.
30 N. LASALLE STREET
SUITE 4200
CHICAGO, IL 60602
TEL: (312) 782-8150
FAX: (312) 782-1684

USER NAME = USSJ696614	DESIGNED - SJJ	REVISED -	
	CHECKED - PJL	REVISED -	
PLOT SCALE = 0.16666000 ' / in.	DRAWN - SJJ	REVISED -	
PLOT DATE = 6/10/2025	CHECKED - PJL	REVISED -	

STATE OF ILLINOIS
DEPARTMENT OF TRANSPORTATION

FIXED BEARINGS - PIER 1
STRUCTURE NO. 099-0186

SHEET SA-25 OF SA-37 SHEETS

F.A.U RTE.	SECTION	COUNTY	TOTAL SHEETS	SHEET NO.
316	FAI 80 21 INTERCHANGE	WILL	1209	643
		CONTRACT NO. 62R22		
	ILLINOIS	FED. AID PROJECT		

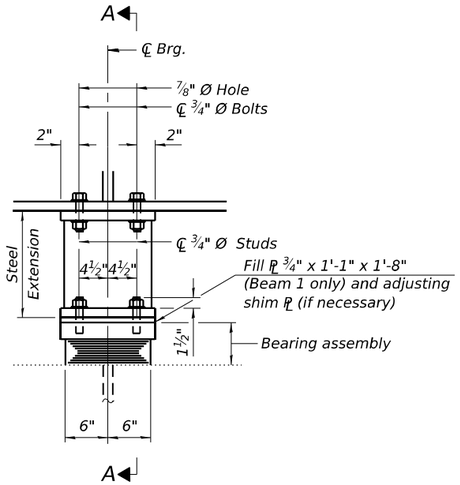

ELEVATION AT PIER 2

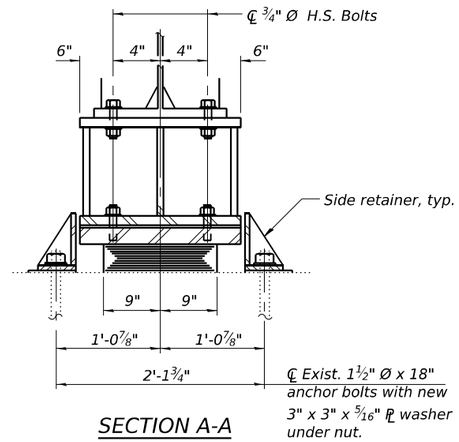

SECTION A-A

FIXED BEARING

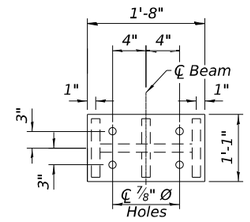

PLAN STEEL EXTENSION

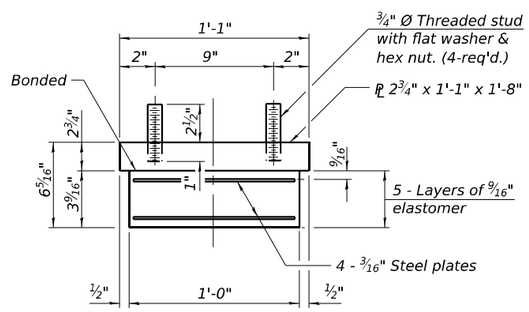

BEARING ASSEMBLY

Note:
Shim plates shall not be placed under bearing assembly.

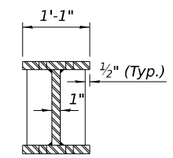

SECTION B-B

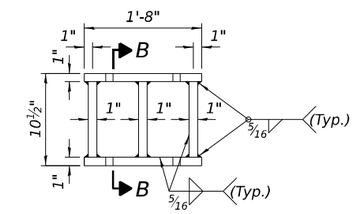

ELEVATION STEEL EXTENSION

Notes:
Side retainers and stainless steel plates shall be included in the cost of Elastomeric Bearing Assembly, Type I.
Side retainers at all supports shall be installed as each member is erected unless an equivalent temporary means of lateral restraint is used.
Two 1/8" adjusting shims shall be provided for each bearing in addition to all other plates or shims and placed as shown on bearing details.
The steel extensions are being paid as "Furnishing and Erecting Structural Steel."

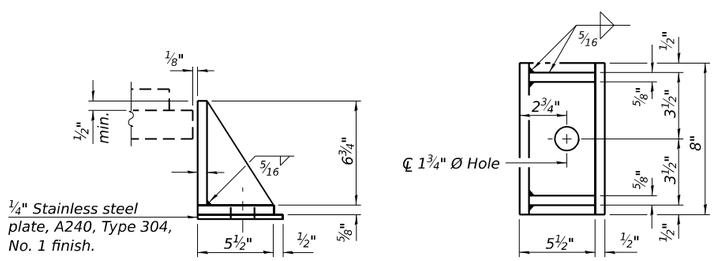

SIDE RETAINER

Equivalent rolled angle with stiffeners will be allowed in lieu of welded plates.

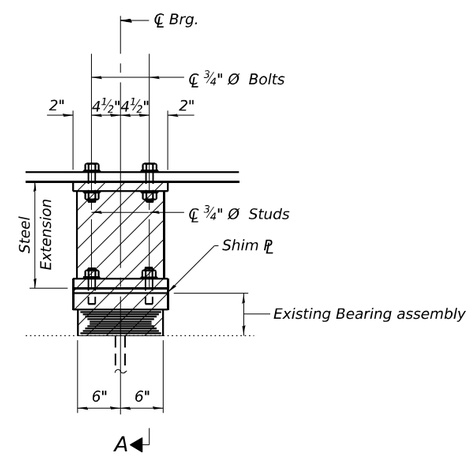

EXISTING BEARING REMOVAL - BEAM 1 & 12

Note:
The cost of removal is included in Structural Steel Removal.

BILL OF MATERIAL

Item	Unit	Total
Elastomeric Bearing Assembly Type I	Each	2
Structural Steel Removal	Pound	580

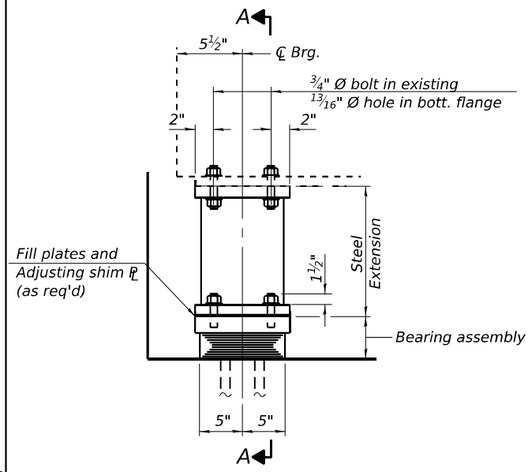

ELEVATION AT SOUTH ABUT.

(Bearing at existing beam shown, bearing at proposed beam similar)

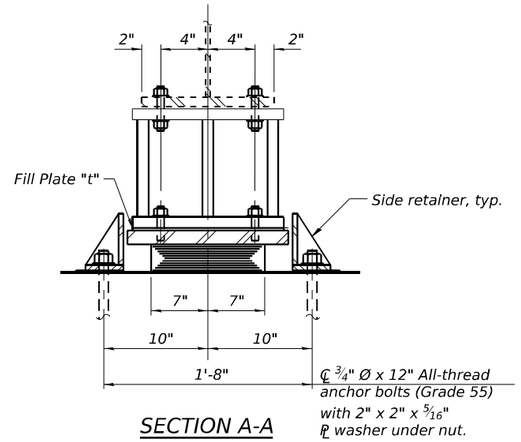

SECTION A-A

(Bearing at existing beam shown, bearing at proposed beam similar)

TYPE I ELASTOMERIC EXP. BRG.

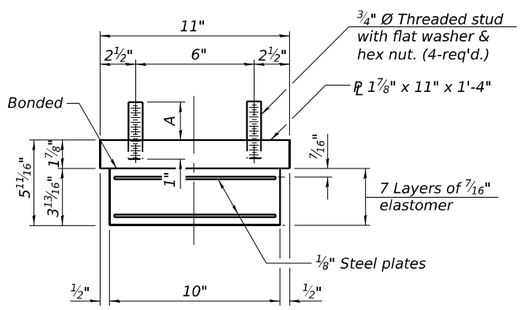

BEARING ASSEMBLY

Note:
Shim plates shall not be placed under bearing assembly.

Notes:
Side retainers and stainless steel plates shall be included in the cost of Elastomeric Bearing Assembly, Type I.
Anchor bolts and side retainers at all supports shall be installed as each member is erected unless an equivalent temporary means of lateral restraint is used.
Two ⅛ in. adjusting shims shall be provided for each bearing in addition to all other plates or shims and placed as shown on bearing details.
The steel extensions are being paid as "Furnishing and Erecting Structural Steel."

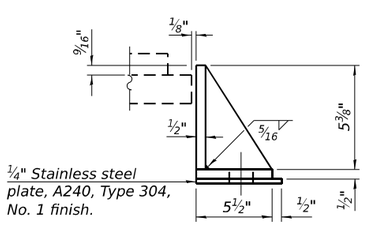

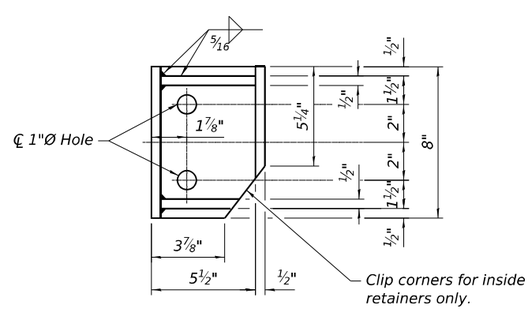

SIDE RETAINER

Equivalent rolled angle with stiffeners will be allowed in lieu of welded plates.

JACK & REMOVE EXISTING BEARING PROCEDURE

1. The Contractor shall submit for approval by the Engineer, plans for jacking existing beams and installing new bearings prior to commencing any related work. The dead load reaction per beam (weight of steel only) is 2 Tons at each abutment. Minimum Jack capacity is 4 Tons at each abutment.
2. Prior to ordering any material, the Contractor shall verify steel extension and fill plate thickness required at each bearing.
3. Jacking and removing existing bearings shall be done after the existing deck is removed and prior to placing the new deck.
4. Jacking lifts shall be limited in accordance with the Special Provision "Jack and Remove Existing Bearings".
5. The new bearings, plates, and steel extensions shall be in place and the jack shall be lowered before the new concrete deck is poured.

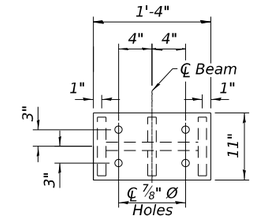

PLAN STEEL EXTENSION

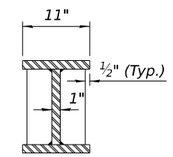

SECTION B-B

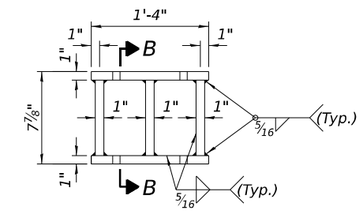

ELEVATION STEEL EXTENSION

STUD HEIGHT "A" DIMENSION

Beam	A
Bm 1	4¼"
Bm 2	2¾"
Bm 3	2¾"
Bm 4	2¾"
Bm 5	2¾"
Bm 6	2¾"
Bm 7	2¾"
Bm 8	2¾"
Bm 9	2¾"
Bm 10	2¾"
Bm 11	2¾"
Bm 12	3¾"

FILL PLATE THICKNESS

Beam	t
Bm 1	1½"
Bm 2	-
Bm 3	-
Bm 4	-
Bm 5	-
Bm 6	-
Bm 7	-
Bm 8	-
Bm 9	-
Bm 10	-
Bm 11	-
Bm 12	1"

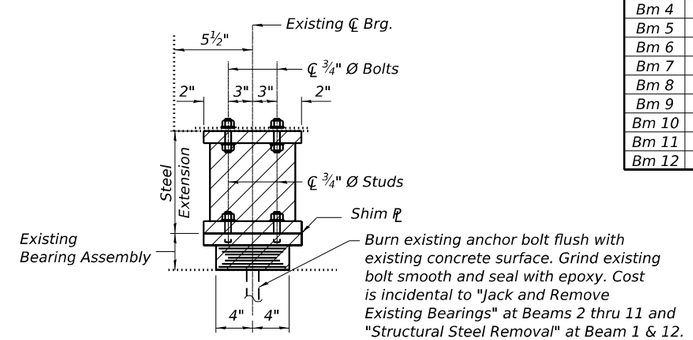

EXISTING BEARING REMOVAL

BILL OF MATERIAL

Item	Unit	Total
Elastomeric Bearing Assembly Type I	Each	12
Anchor Bolts, ¾"	Each	48
Jack and Remove Existing Bearings	Each	10
Structural Steel Removal	Pound	310

WSP USA Inc.
30 N. LASALLE STREET
SUITE 4200
CHICAGO, IL 60602
TEL: (312) 782-8150
FAX: (312) 782-1684

USER NAME = USSJ696614	DESIGNED - LAS	REVISED -	
	CHECKED - MS	REVISED -	
PLOT SCALE = 0.167 ' / in.	DRAWN - MA	REVISED -	
PLOT DATE = 6/10/2025	CHECKED - LAS	REVISED -	

STATE OF ILLINOIS
DEPARTMENT OF TRANSPORTATION

TYPE I ELASTOMERIC BEARINGS - NORTH ABUTMENT
STRUCTURE NO. 099-0186

SHEET SA-27 OF SA-37 SHEETS

F.A.U RTE.	SECTION	COUNTY	TOTAL SHEETS	SHEET NO.
316	FAI 80 21 INTERCHANGE	WILL	1209	645
		CONTRACT NO. 62R22		
		ILLINOIS	FED. AID PROJECT	

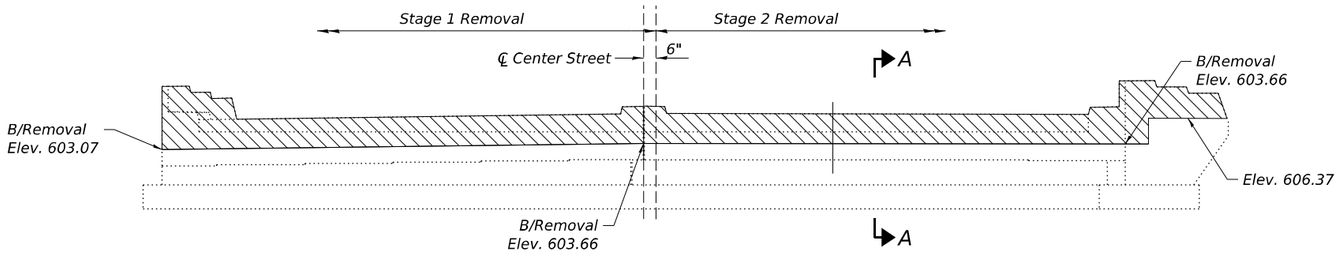

ELEVATION - SOUTH ABUTMENT

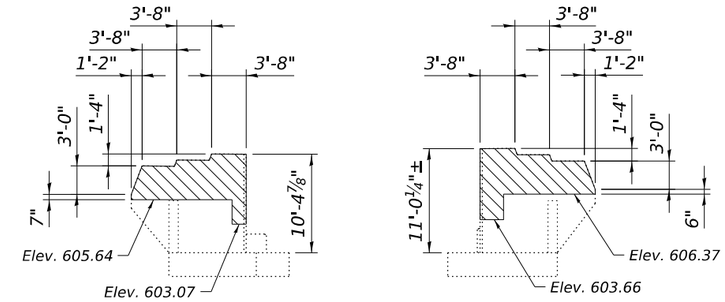

ELEVATION - SOUTH ABUT. WINGWALLS

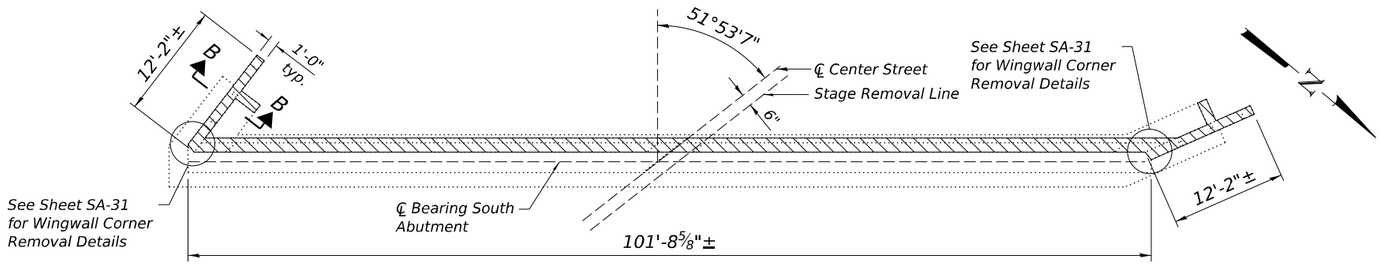

PLAN - SOUTH ABUTMENT

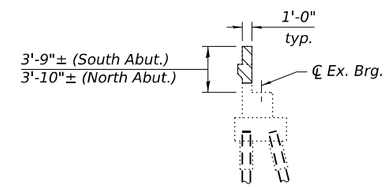

SECTION A-A

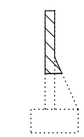

SECTION B-B

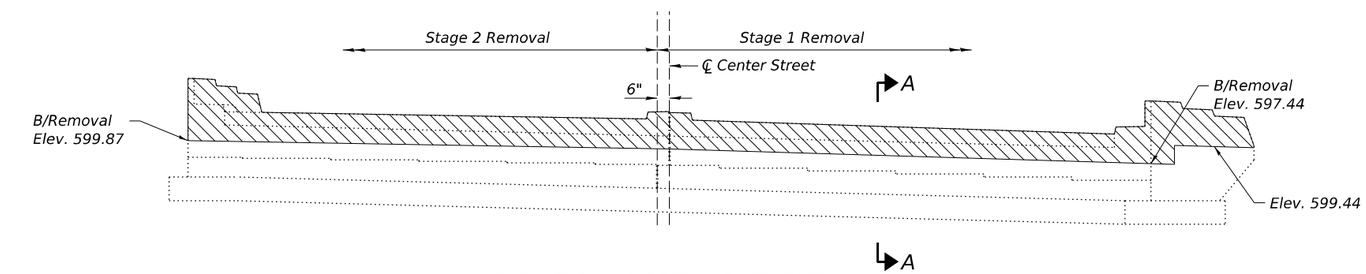

ELEVATION - NORTH ABUTMENT

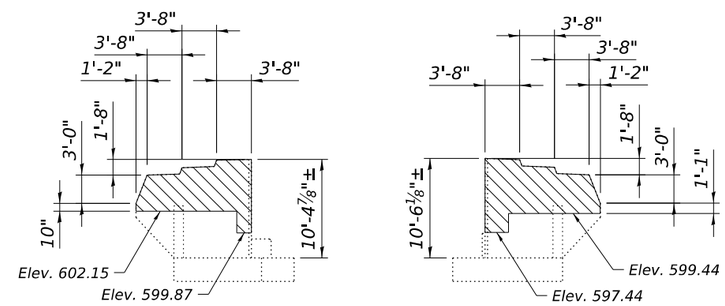

ELEVATION - NORTH ABUT. WINGWALLS

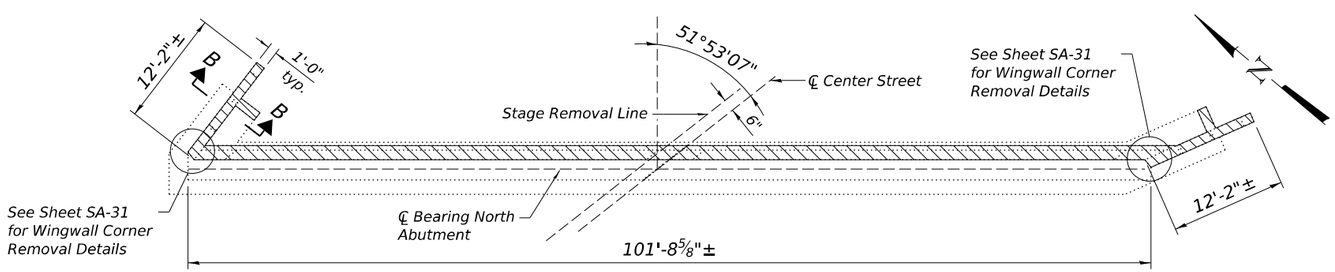

PLAN - NORTH ABUTMENT

LEGEND

Concrete removal

BILL OF MATERIAL

ITEM	UNIT	TOTAL
Concrete Removal	Cu. Yd.	42.8

Notes:
1. Existing piles not shown, except at Section A-A.
2. Any damage to portions of the existing structure to remain in service shall be repaired by the Contractor at no additional cost to the Department.

WSP USA Inc.
30 N. LASALLE STREET
SUITE 4200
CHICAGO, IL 60602
TEL: (312) 782-8150
FAX: (312) 782-1684

USER NAME = USSJ696614	DESIGNED - LAS	REVISED -	
	CHECKED - MS	REVISED -	
PLOT SCALE = 0.167 ' / in.	DRAWN - MA	REVISED -	
PLOT DATE = 4/22/2025	CHECKED - LAS	REVISED -	

STATE OF ILLINOIS
DEPARTMENT OF TRANSPORTATION

ABUTMENT REMOVAL DETAILS
STRUCTURE NO. 099-0186

SHEET SA-28 OF SA-37 SHEETS

F.A.U RTE.	SECTION	COUNTY	TOTAL SHEETS	SHEET NO.
316	FAI 80 21 INTERCHANGE	WILL	1209	646
		CONTRACT NO. 62R22		
	ILLINOIS	FED. AID PROJECT		

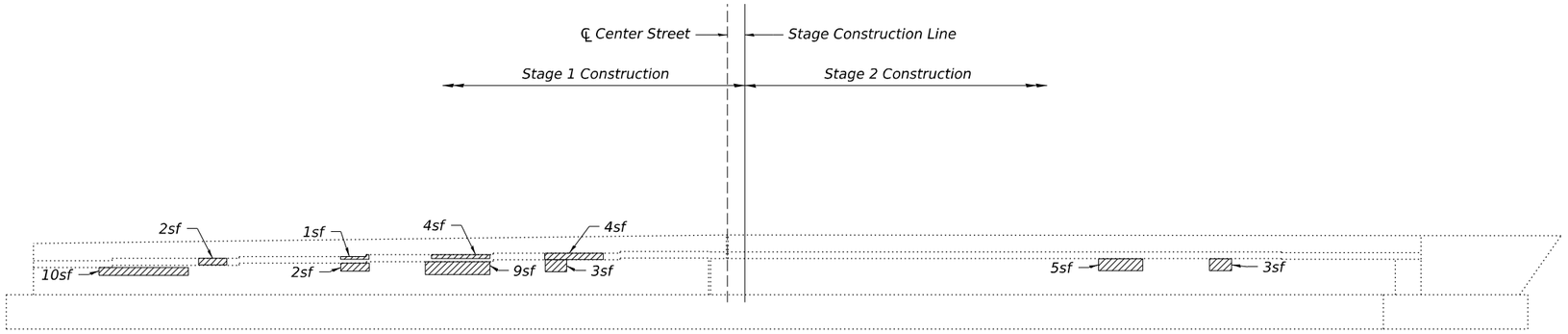

ELEVATION - SOUTH ABUTMENT

(Showing Elevation after Concrete Removal)

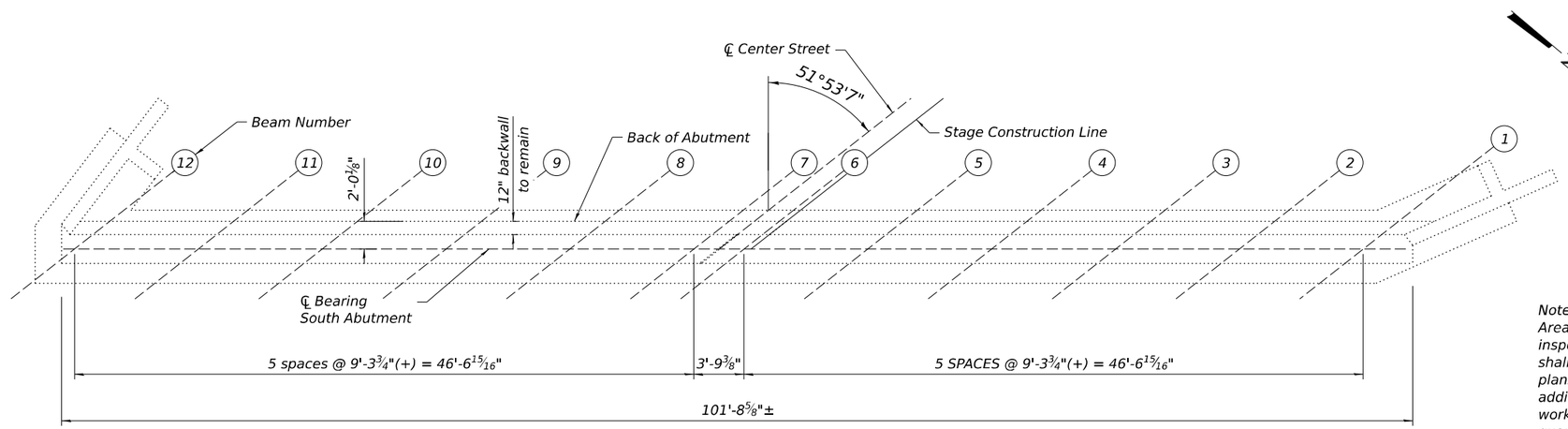

PLAN - SOUTH ABUTMENT

Note;
Area of repairs shown are estimated based on inspections performed in April 2022. The Engineer shall record the actual repair areas in the "As Built" plans. Changes in repair areas shall not be cause for additional compensation for a change in scope of work, however, the Contractor will be paid for the quantity furnished at the unit bid price for the work.

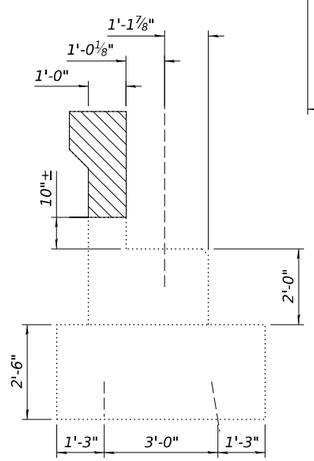

SECTION THROUGH ABUTMENT

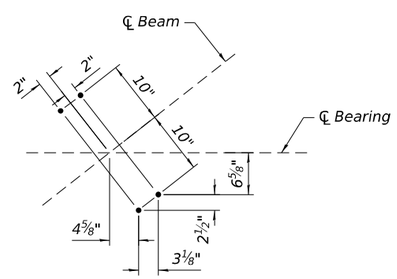

ANCHOR BOLT LAYOUT

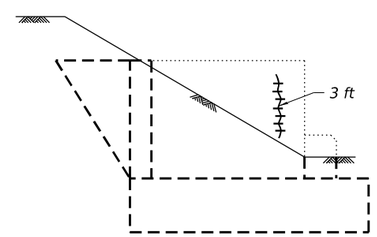

EAST WINGWALL

Looking West

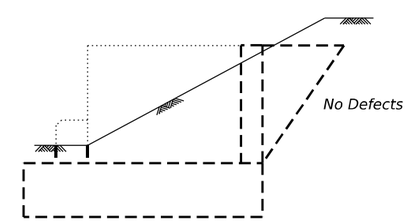

WEST WINGWALL

Looking East

SOUTH ABUTMENT WINGWALLS

LEGEND

- Structural Repair of Concrete (Depth equal to or less than 5 inches)
- Concrete Removal
- Epoxy Crack Injection

BILL OF MATERIAL

Item	Unit	Quantity
Structural Repair of Concrete (Depth Equal to or Less Than 5")	Sq. Ft.	43
Epoxy Crack Injection	Foot	3

WSP USA Inc.
30 N. LASALLE STREET
SUITE 4200
CHICAGO, IL 60602
TEL: (312) 782-8150
FAX: (312) 782-1684

USER NAME = USSJ696614	DESIGNED - MA	REVISED -	
	CHECKED - LAS	REVISED -	
PLOT SCALE = 8.000 ' / in.	DRAWN - MA	REVISED -	
PLOT DATE = 4/22/2025	CHECKED - LAS	REVISED -	

STATE OF ILLINOIS
DEPARTMENT OF TRANSPORTATION

SOUTH ABUTMENT REPAIR PLANS
STRUCTURE NO. 099-0186

SHEET SA-29 OF SA-37 SHEETS

F.A.U RTE.	SECTION	COUNTY	TOTAL SHEETS	SHEET NO.
316	FAI 80 21 INTERCHANGE	WILL	1209	647
		CONTRACT NO. 62R22		
	ILLINOIS	FED. AID PROJECT		

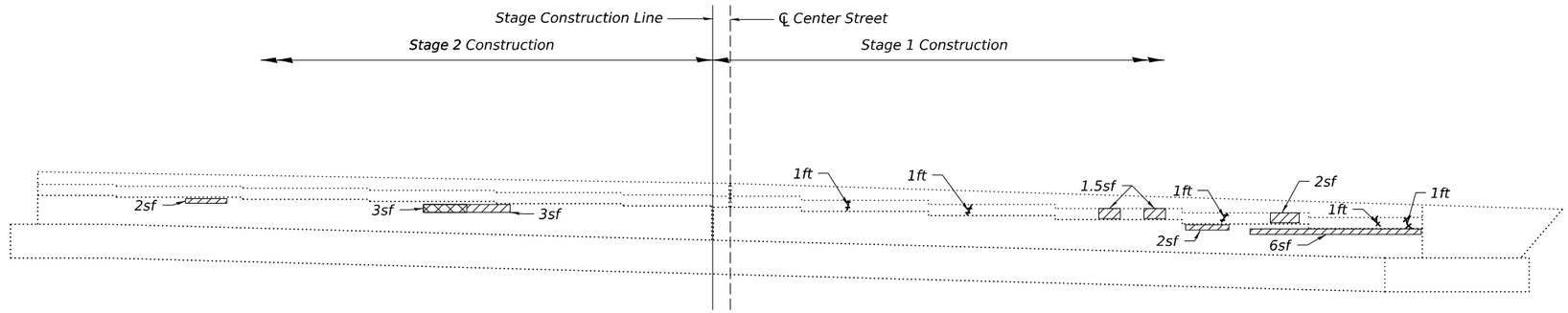

ELEVATION - NORTH ABUTMENT

(Showing Elevation after Concrete Removal)

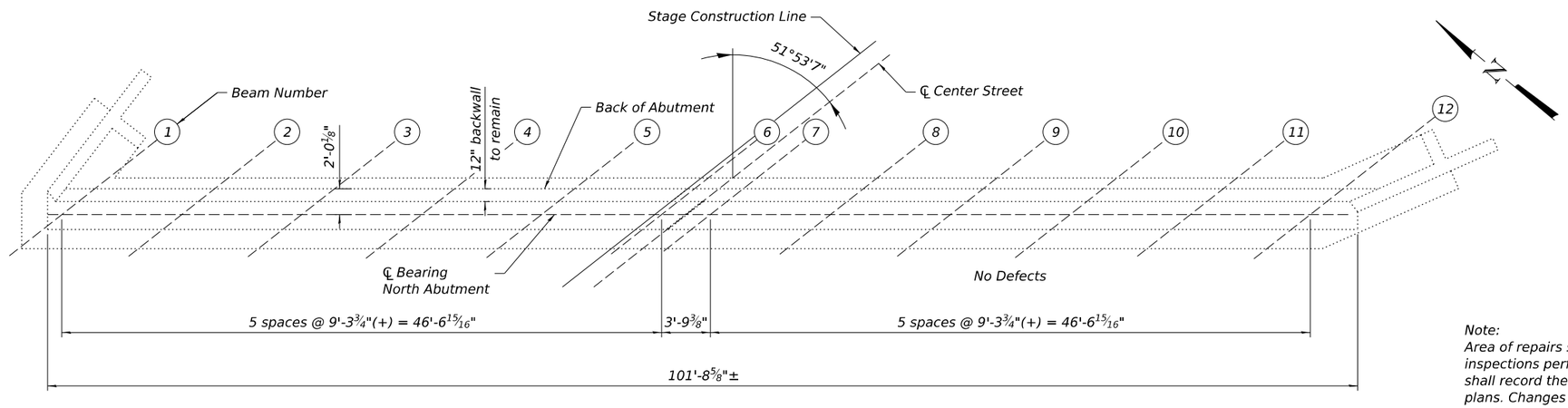

PLAN - NORTH ABUTMENT

Note:
Area of repairs shown are estimated based on inspections performed in April 2022. The Engineer shall record the actual repair areas in the "As Built" plans. Changes in repair areas shall not be cause for additional compensation for a change in scope of work, however, the Contractor will be paid for the quantity furnished at the unit bid price for the work. For Section through Abutment and Anchor Bolt Layout see Sheet SA-29.

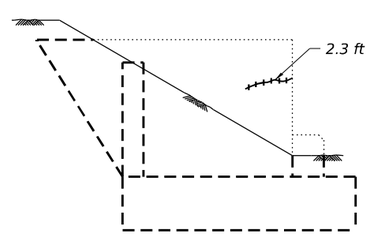

WEST WINGWALL

Looking East

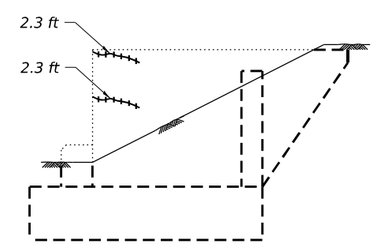

EAST WINGWALL

Looking West

NORTH ABUTMENT WINGWALLS

LEGEND

- Structural Repair of Concrete (Depth Greater than 5 inches)
- Structural Repair of Concrete (Depth equal to or less than 5 inches)
- Epoxy Crack Injection

BILL OF MATERIAL

Item	Unit	Quantity
Structural Repair of Concrete (Depth Equal to or Less Than 5")	Sq. Ft.	18
Structural Repair of Concrete (Depth Greater Than 5")	Sq. Ft.	3
Epoxy Crack Injection	Foot	13

WSP USA Inc.
30 N. LASALLE STREET
SUITE 4200
CHICAGO, IL 60602
TEL: (312) 782-8150
FAX: (312) 782-1684

USER NAME = USSJ696614	DESIGNED - MA	REVISED -	
	CHECKED - LAS	REVISED -	
PLOT SCALE = 8.000 ' / in.	DRAWN - MA	REVISED -	
PLOT DATE = 4/22/2025	CHECKED - LAS	REVISED -	

STATE OF ILLINOIS
DEPARTMENT OF TRANSPORTATION

NORTH ABUTMENT REPAIR PLANS
STRUCTURE NO. 099-0186

SHEET SA-30 OF SA-37 SHEETS

F.A.U RTE.	SECTION	COUNTY	TOTAL SHEETS	SHEET NO.
316	FAI 80 21 INTERCHANGE	WILL	1209	648
		CONTRACT NO. 62R22		
	ILLINOIS	FED. AID PROJECT		

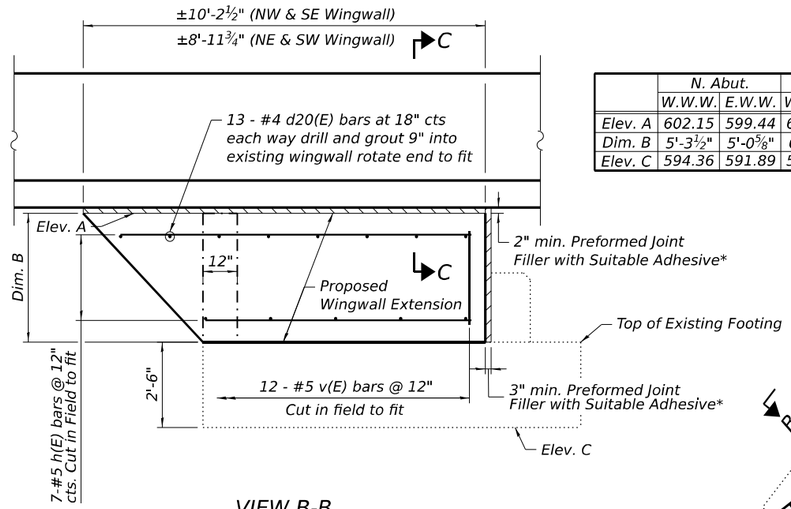

VIEW B-B

	N. Abut.		S. Abut.	
	W.W.W.	E.W.W.	W.W.W.	E.W.W.
Elev. A	602.15	599.44	606.37	605.64
Dim. B	5'-3½"	5'-0⅝"	6'-2⅜"	5'-5⅝"
Elev. C	594.36	591.89	597.67	597.67

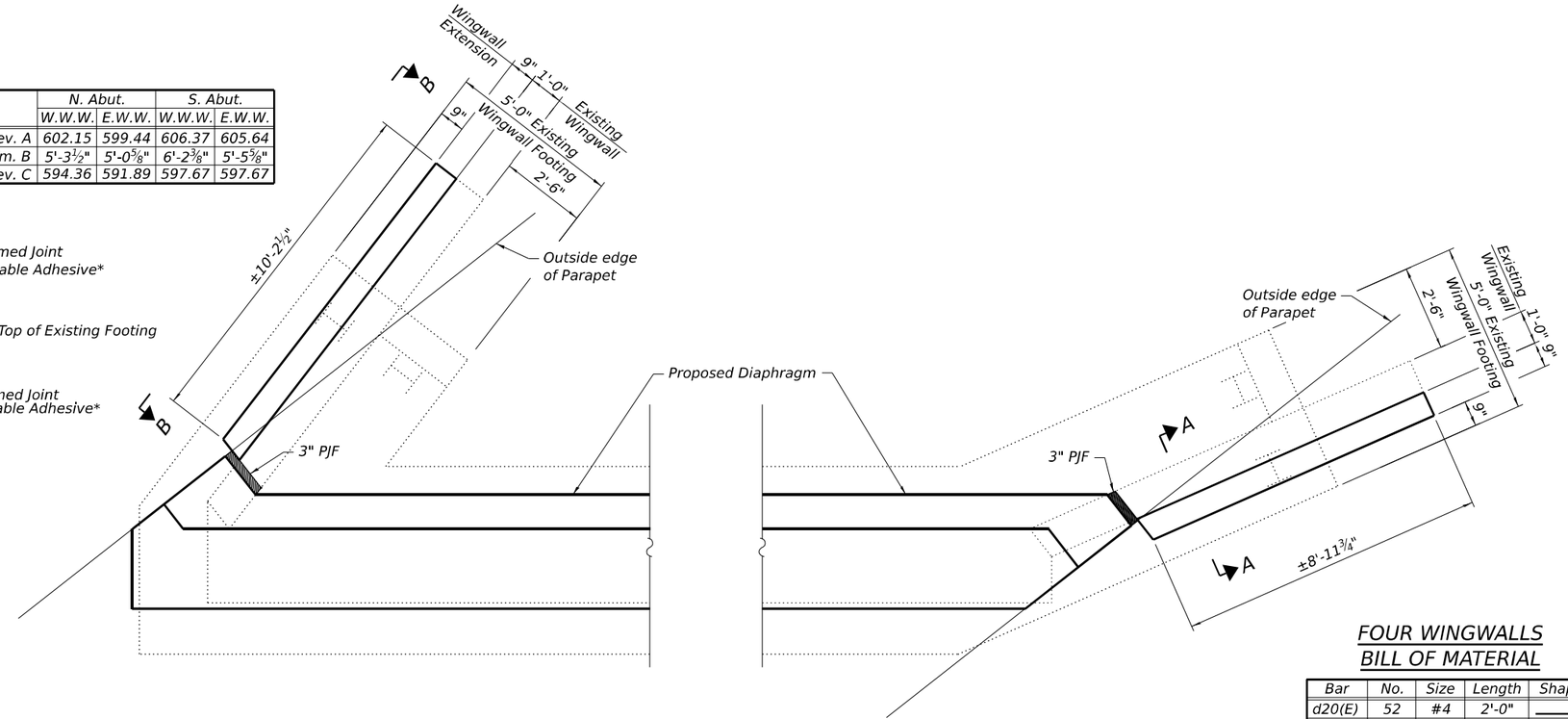

PLAN - SOUTH ABUTMENT
(Similar at North Abutment, Opposite Hand)

FOUR WINGWALLS
BILL OF MATERIAL

Bar	No.	Size	Length	Shape
d20(E)	52	#4	2'-0"	
h(E)	28	#5	11'-8"	
v(E)	48	#5	5'-10"	
Concrete Structures			Cu. Yd.	4.3
Reinforcement Bars, Epoxy Coated			Pound	700

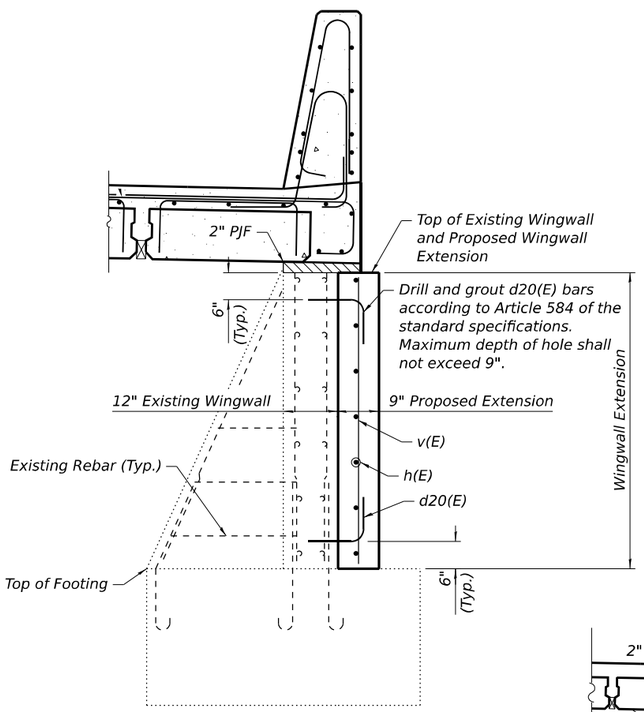

SECTION A-A

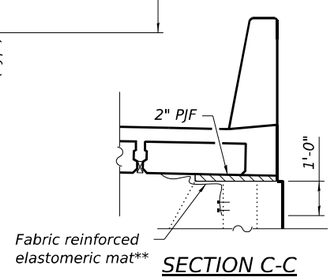

SECTION C-C

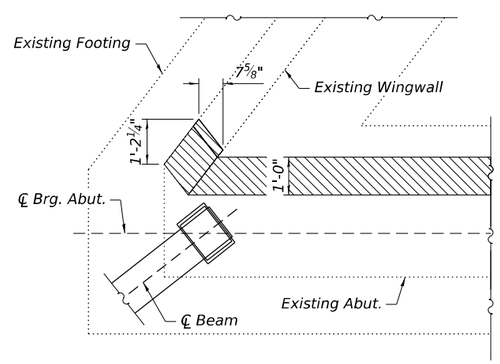

WINGWALL CORNER
REMOVAL DETAIL
(NW & SE Corner)

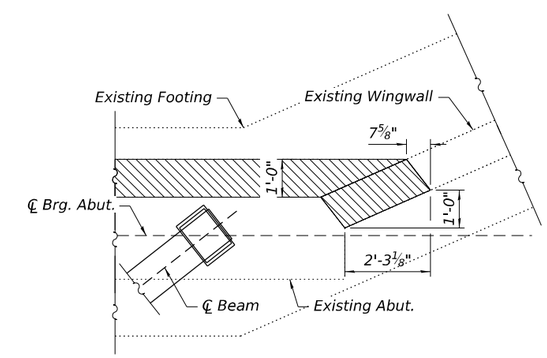

WINGWALL CORNER
REMOVAL DETAIL
(NE & SW Corner)

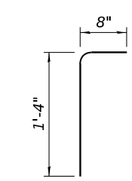

BAR d20(E)

* Adhesive must be compatible with Preformed Joint Filler material and concrete. Surface preparation shall be in accordance with Manufacturer's Guidelines. PJF shall completely separate the approach slab from the top of the wingwall.

** Limits of fabric reinforced elastomeric mat according to Section 1028 of the Standard Specifications and installed according to applicable requirements of Article 520.06 of the Standard Specifications. Attach to wingwall with nails and at approach end, drill holes into membrane and tie to reinforcement. Provide 6" slack in fabric. Cost included with Concrete Superstructures.

LEGEND

Concrete removal

NOTES:

1. The clear cover for reinforcement bars to the surface of concrete shall be 2" unless otherwise shown.
2. See sheet SA-28 for Abutment Removal Details.

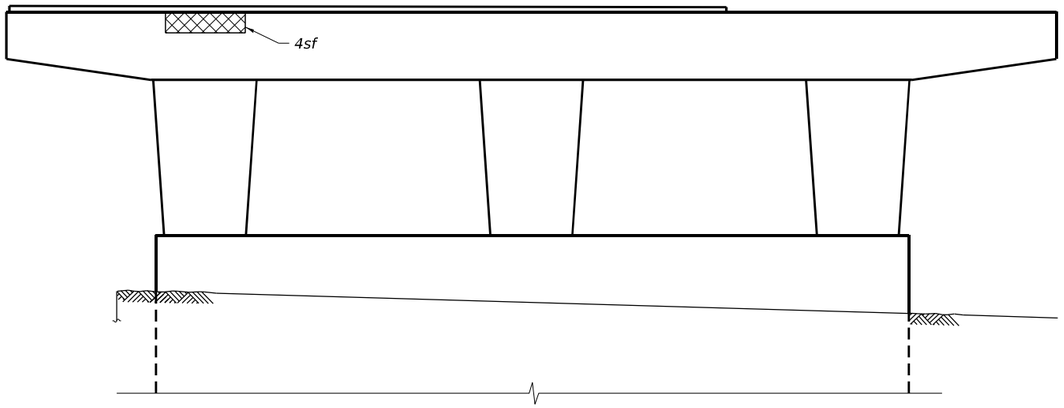

ELEVATION - PIER 1 WEST
(Looking North)

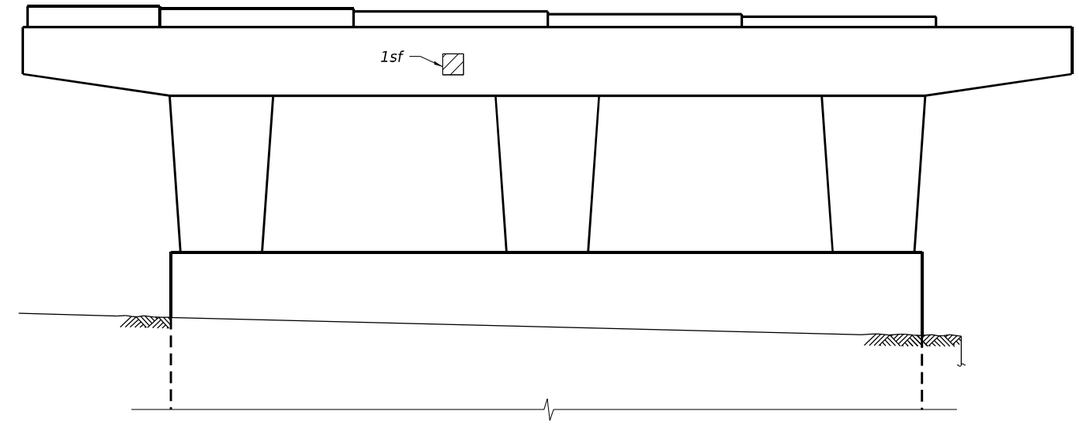

ELEVATION - PIER 1 EAST
(Looking North)

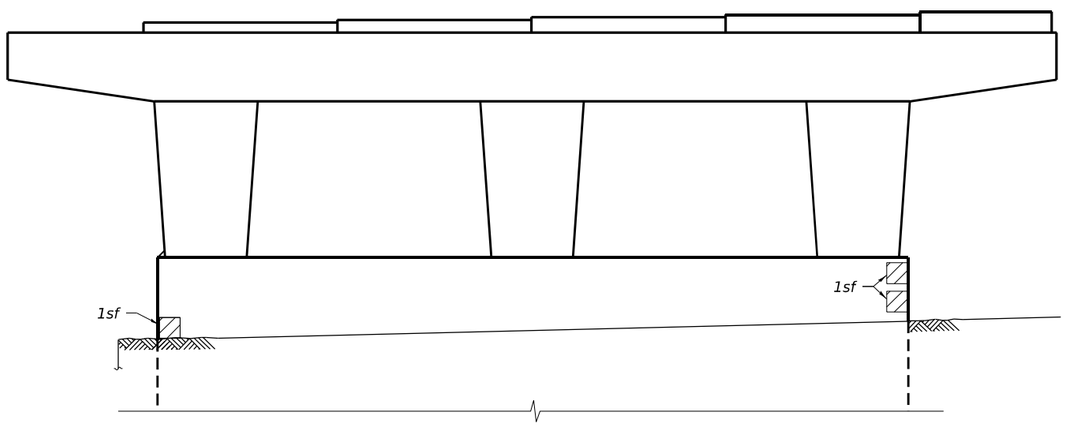

ELEVATION - PIER 1 EAST
(Looking South)

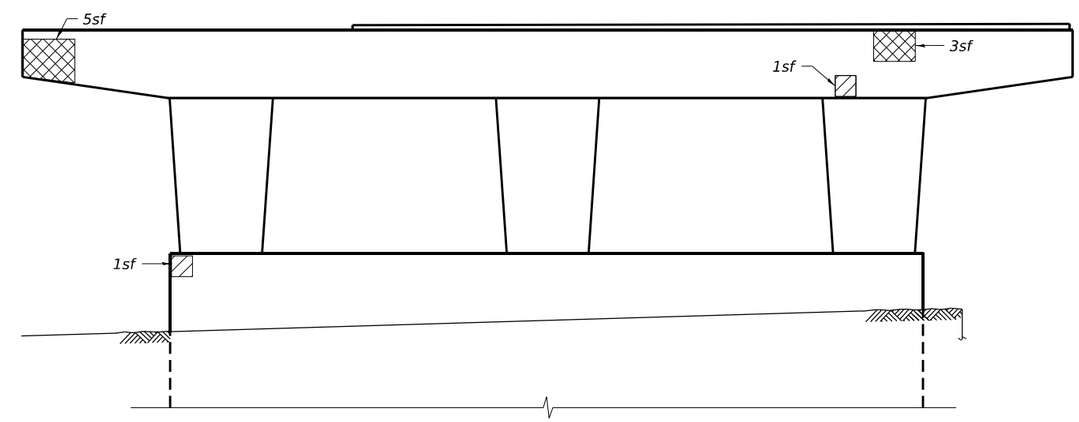

ELEVATION - PIER 1 WEST
(Looking South)

Note:
Area of repairs shown are estimated based on inspections performed in April 2022. The Engineer shall record the actual repair areas in the "As Built" plans. Changes in repair areas shall not be cause for additional compensation for a change in scope of work, however, the Contractor will be paid for the quantity furnished at the unit bid price for the work.

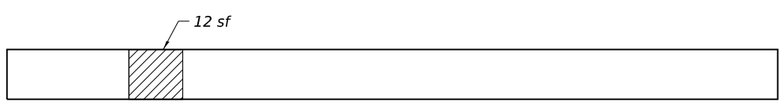

PIER 1 WEST CAP TOP PLAN

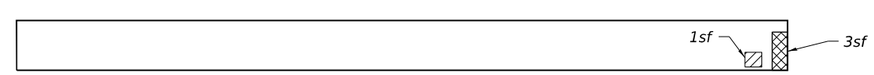

PIER 1 WEST CAP BOTTOM PLAN

N

LEGEND

- Structural Repair of Concrete (Depth Greater Than 5")
- Structural Repair of Concrete (Depth Equal to or Less Than 5")

BILL OF MATERIAL

Item	Unit	Quantity
Structural Repair of Concrete (Depth Greater Than 5")	Sq. Ft.	15
Structural Repair of Concrete (Depth Equal to or Less Than 5")	Sq. Ft.	19

WSP USA Inc.
30 N. LASALLE STREET
SUITE 4200
CHICAGO, IL 60602
TEL: (312) 782-8150
FAX: (312) 782-1684

USER NAME = USSJ696614	DESIGNED - MEA	REVISED -	
	CHECKED - LAS	REVISED -	
PLOT SCALE = 8.000 ' / in.	DRAWN - MEA	REVISED -	
PLOT DATE = 4/22/2025	CHECKED - LAS	REVISED -	

STATE OF ILLINOIS
DEPARTMENT OF TRANSPORTATION

PIER 1 REPAIR DETAILS
STRUCTURE NO. 099-0186

SHEET SA-32 OF SA-37 SHEETS

F.A.U RTE.	SECTION	COUNTY	TOTAL SHEETS	SHEET NO.
316	FAI 80 21 INTERCHANGE	WILL	1209	650
		CONTRACT NO. 62R22		
	ILLINOIS	FED. AID PROJECT		

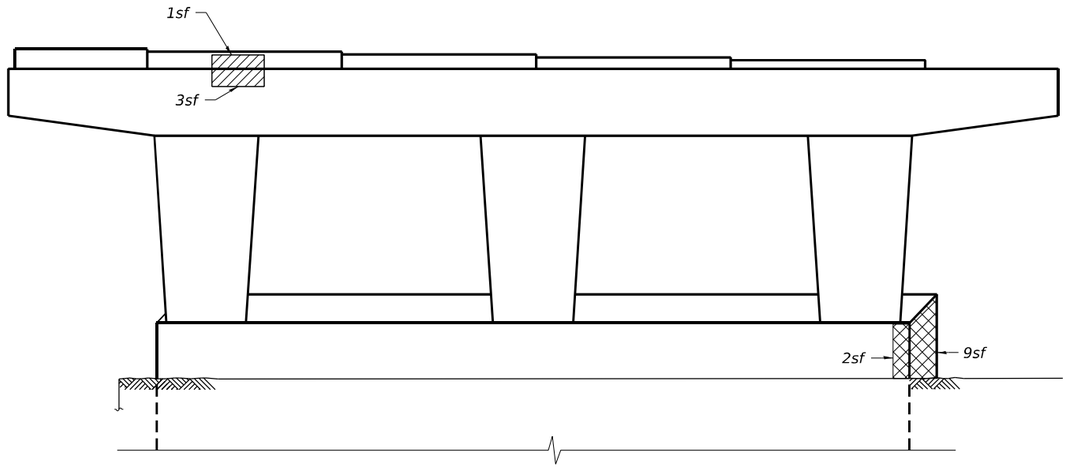

ELEVATION - PIER 2 WEST
(Looking North)

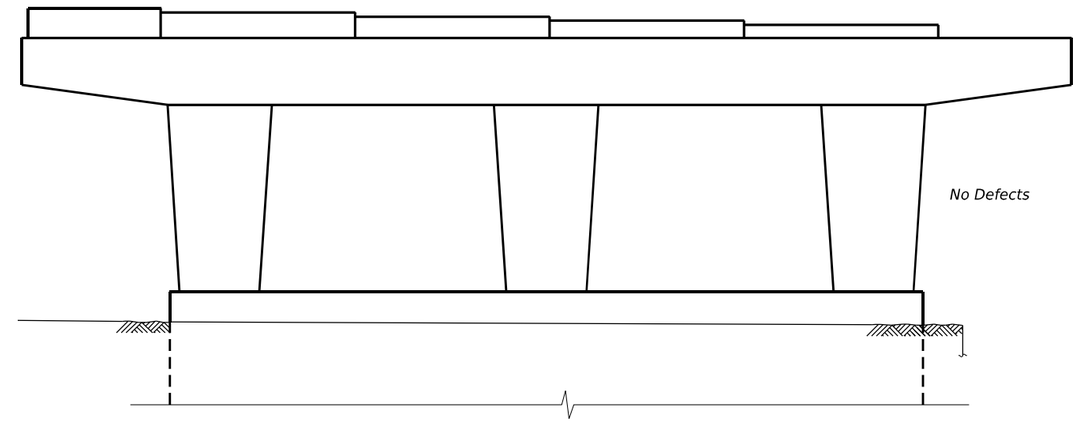

ELEVATION - PIER 2 EAST
(Looking North)

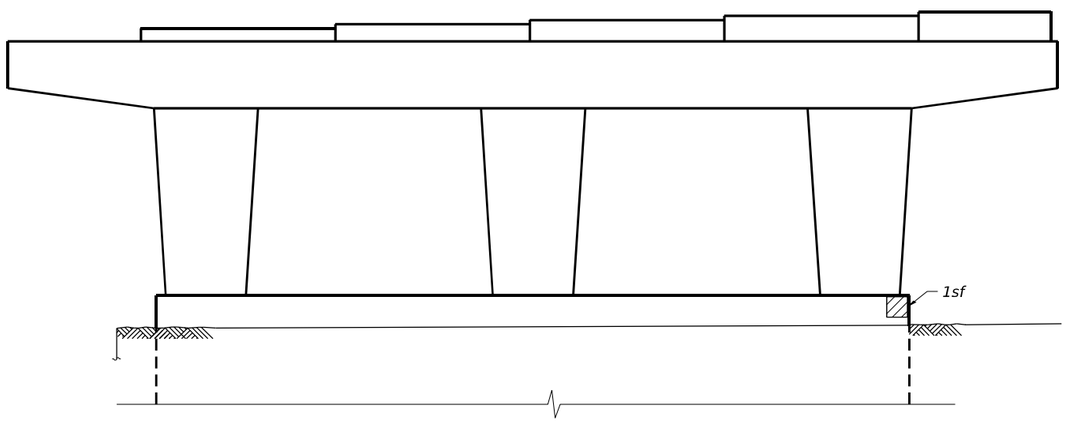

ELEVATION - PIER 2 EAST
(Looking South)

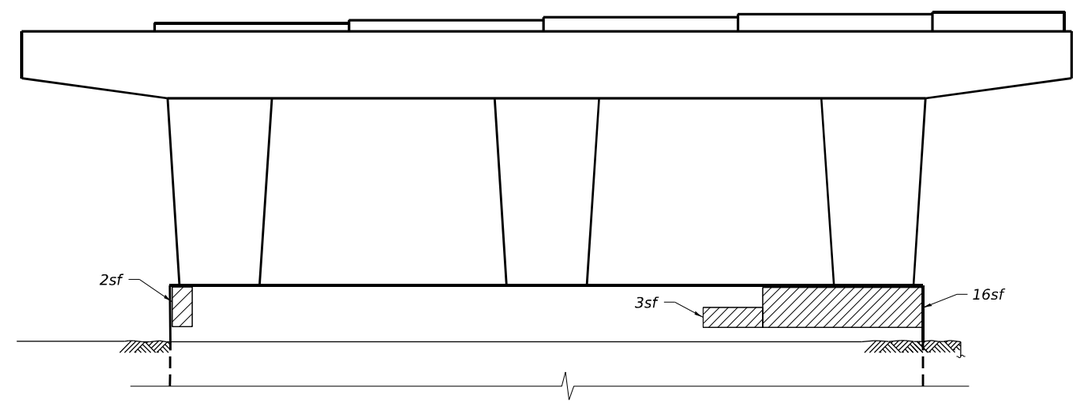

ELEVATION - PIER 2 WEST
(Looking South)

Note:
Area of repairs shown are estimated based on inspections performed in April 2022. The Engineer shall record the actual repair areas in the "As Built" plans. Changes in repair areas shall not be cause for additional compensation for a change in scope of work, however, the Contractor will be paid for the quantity furnished at the unit bid price for the work.

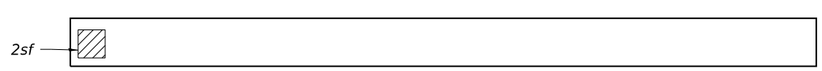

PIER 2 WEST CAP BOTTOM PLAN

N

LEGEND

- Structural Repair of Concrete (Depth Greater Than 5")
- Structural Repair of Concrete (Depth Equal or Less Than 5")

BILL OF MATERIAL

Item	Unit	Quantity
Structural Repair of Concrete (Depth Greater Than 5")	Sq. Ft.	11
Structural Repair of Concrete (Depth Equal or Less Than 5")	Sq. Ft.	28

WSP USA Inc.
30 N. LASALLE STREET
SUITE 4200
CHICAGO, IL 60602
TEL: (312) 782-8150
FAX: (312) 782-1684

USER NAME = USSJ696614	DESIGNED - MEA	REVISED -	
	CHECKED - LAS	REVISED -	
PLOT SCALE = 8.000 ' / in.	DRAWN - MEA	REVISED -	
PLOT DATE = 4/22/2025	CHECKED - LAS	REVISED -	

STATE OF ILLINOIS
DEPARTMENT OF TRANSPORTATION

PIER 2 REPAIR DETAILS
STRUCTURE NO. 099-0186

SHEET SA-33 OF SA-37 SHEETS

F.A.U RTE.	SECTION	COUNTY	TOTAL SHEETS	SHEET NO.
316	FAI 80 21 INTERCHANGE	WILL	1209	651
		CONTRACT NO. 62R22		
		ILLINOIS FED. AID PROJECT		

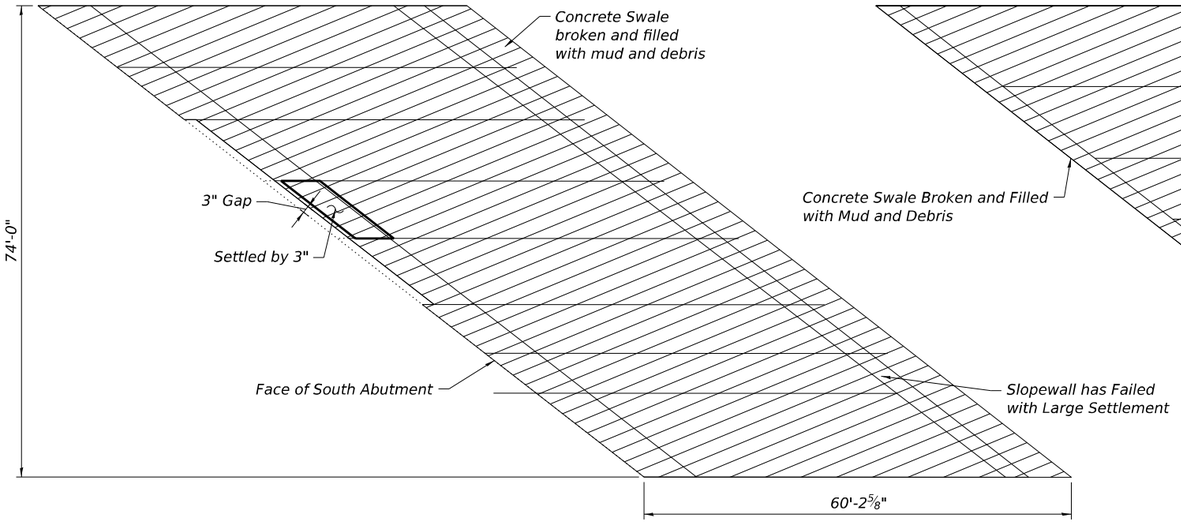

EXISTING SOUTH SLOPEWALL PLAN

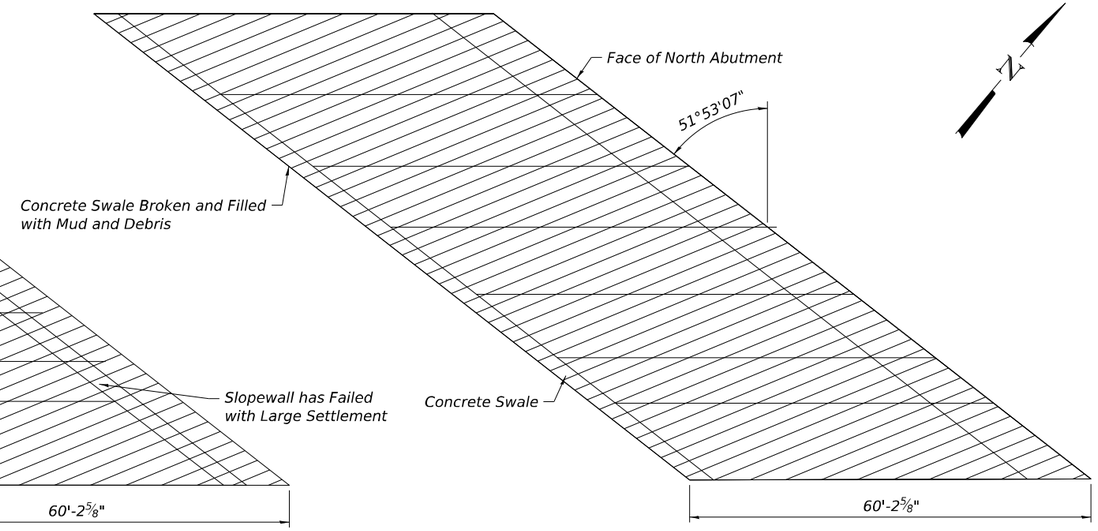

EXISTING NORTH SLOPEWALL PLAN

LEGEND

Slopewall Removal

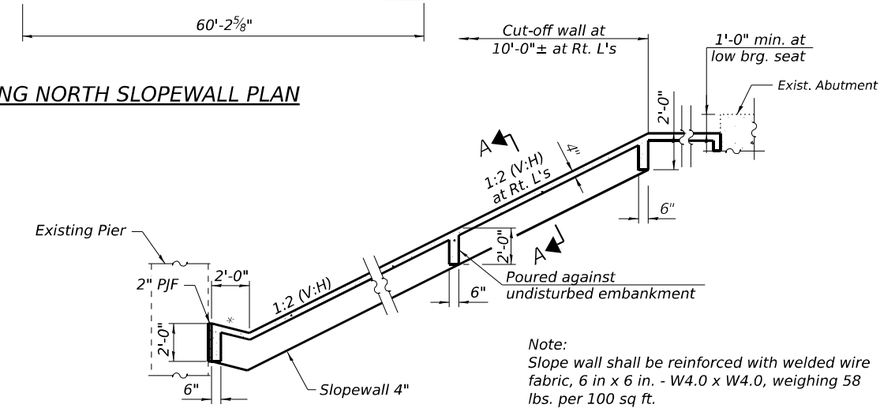

Note:
Slope wall shall be reinforced with welded wire fabric, 6 in x 6 in. - W4.0 x W4.0, weighing 58 lbs. per 100 sq ft.

SECTION THRU CONCRETE SLOPEWALL
(Horizontal dimensions @ Rt. ∠'s)

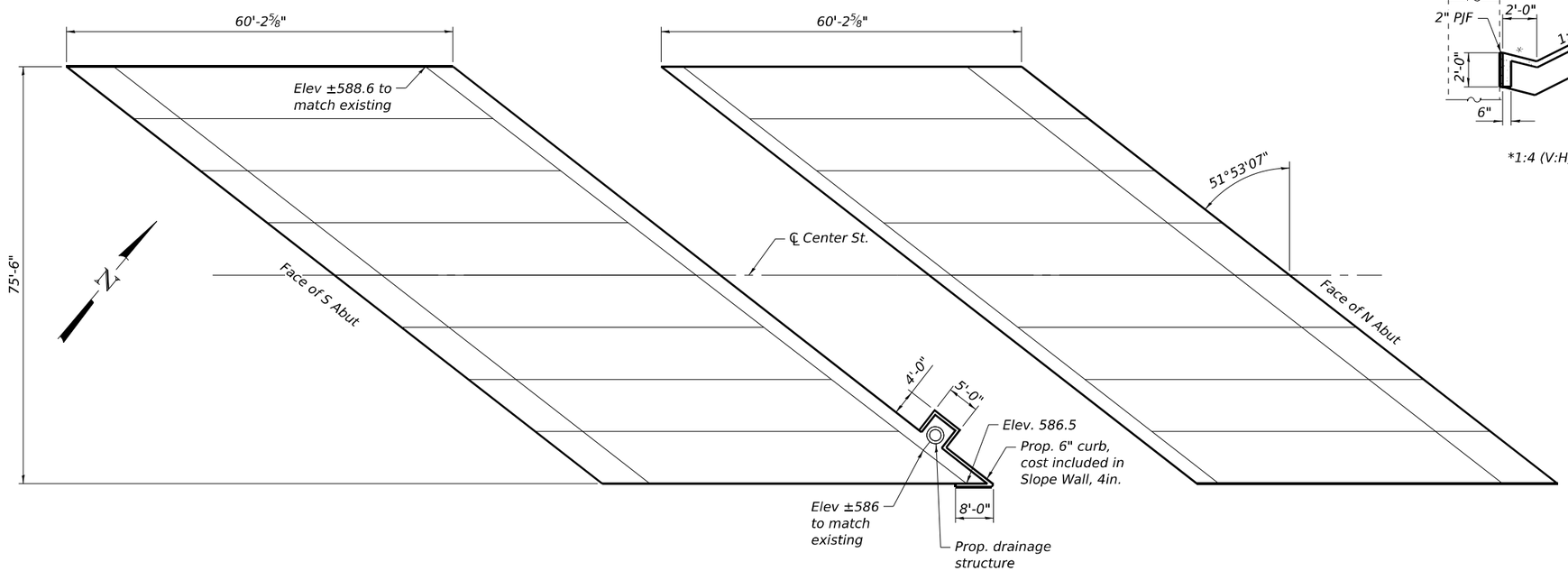

PROPOSED SOUTH SLOPEWALL PLAN

PROPOSED NORTH SLOPEWALL PLAN

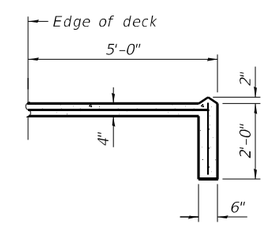

SECTION A-A

BILL OF MATERIAL

Item	Unit	Quantity
Slope Wall Removal	Sq. Yd.	1,107
Slope Wall, 4 in.	Sq. Yd.	1,191

WSP USA Inc.
30 N. LASALLE STREET
SUITE 4200
CHICAGO, IL 60602
TEL: (312) 782-8150
FAX: (312) 782-1684

USER NAME = USSJ696614	DESIGNED - LAS	REVISED -	
	CHECKED - MS	REVISED -	
PLOT SCALE = 8.000 ' / in.	DRAWN - MA	REVISED -	
PLOT DATE = 4/22/2025	CHECKED - LAS	REVISED -	

STATE OF ILLINOIS
DEPARTMENT OF TRANSPORTATION

SLOPEWALL
STRUCTURE NO. 099-0186

SHEET SA-34 OF SA-37 SHEETS

F.A.U RTE.	SECTION	COUNTY	TOTAL SHEETS	SHEET NO.
316	FAI 80 21 INTERCHANGE	WILL	1209	652
		CONTRACT NO. 62R22		
		ILLINOIS FED. AID PROJECT		

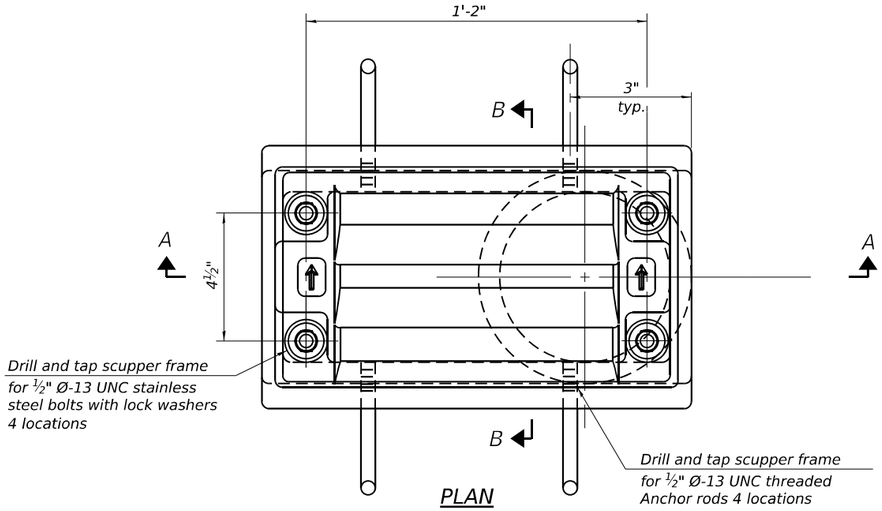

PLAN

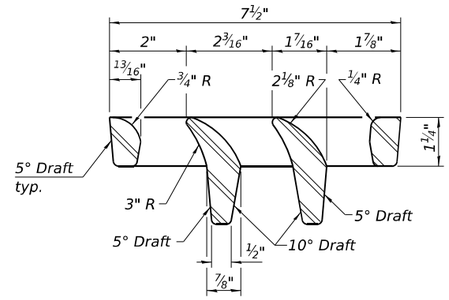

VANE GRATE DETAIL

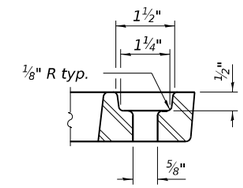

GRATE BOLT HOLE DETAIL

Notes:

All cast iron parts shall be gray iron conforming to the requirements of AASHTO M105, Class 35B and AASHTO M306.

Bolts, anchor rods, nuts and washers shall be according to ASTM A307 and shall be galvanized according to AASHTO M232. As an alternate stainless steel may be used.

Stainless steel hardware shall be according to Article 1006.29(d) of the Standard Specifications.

Structural steel weldments of equal sections and of the same configuration may be substituted for the cast iron scupper frames and downspouts; however, the scupper grates shall remain cast iron. Fillet or full penetration welds shall be used for the weldments. Details shall be submitted to the Engineer for approval.

Structural steel scupper frames and downspouts, when utilized, shall be galvanized according to AASHTO M111.

As an alternate, fiberglass may be used for downspouts according to ASTM D2996 with a short-time rupture strength hoop tensile stress of 30,000 psi min. in lieu of the cast iron or structural steel.

Exterior surfaces of downspouts and exterior exposed surfaces of the scupper frame below deck shall be treated as specified on sheet SA-2.

The Contractor shall take appropriate measures to assure that Protective Coat is not applied to the scupper.

Cost of the grate, frame, downspout, anchor rods, nuts and washers including complete installation of the scupper shall be paid for at the contract unit price for Drainage Scuppers, DS-11.

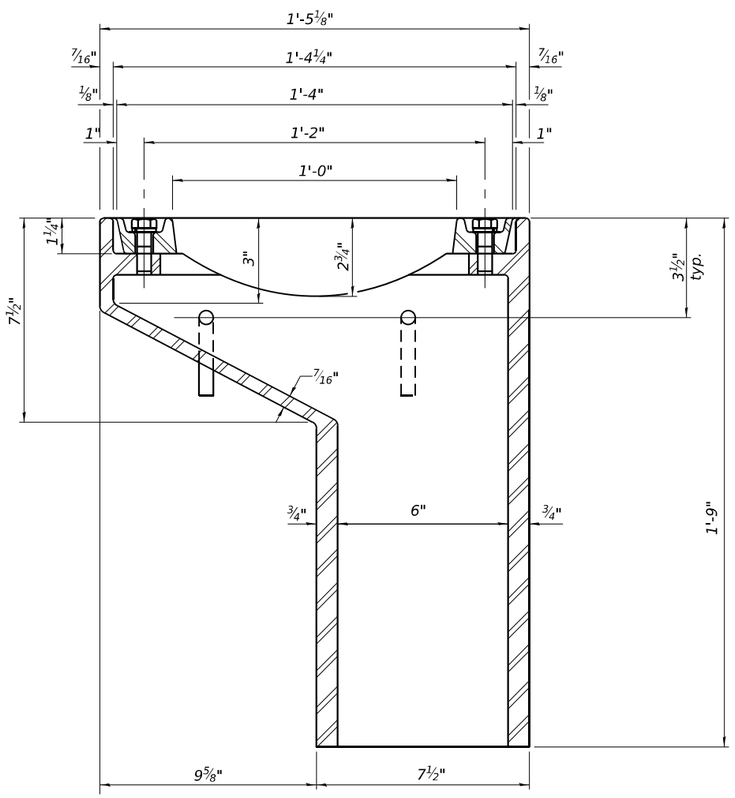

SECTION A-A

See sheet SA-15 for scupper location relative to parapet.

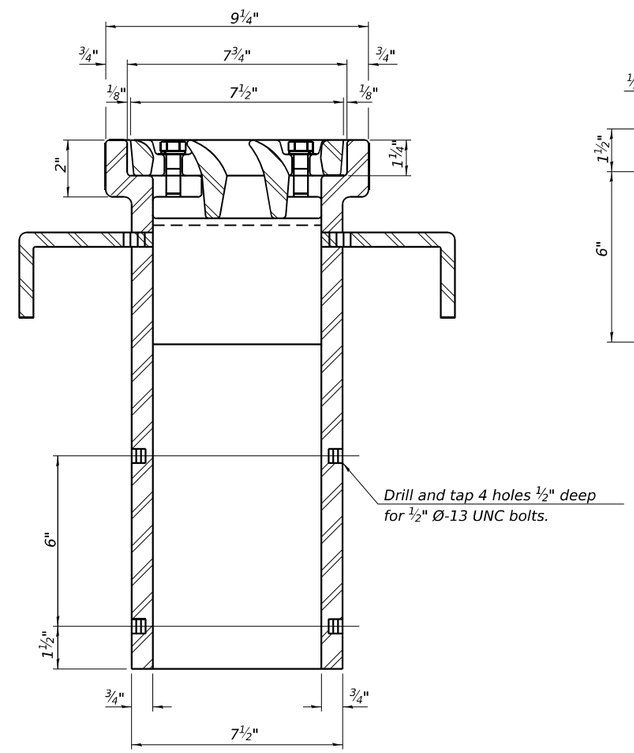

SECTION B-B

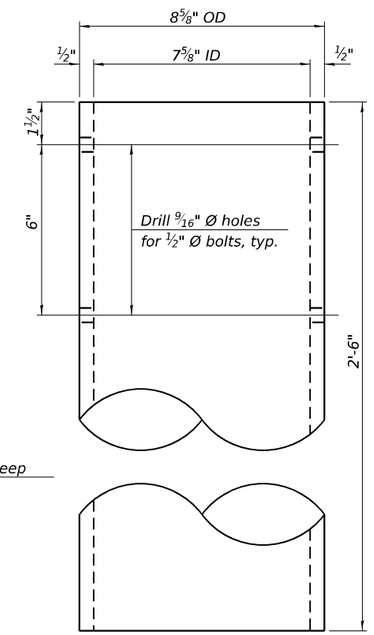

DOWNSPOUT

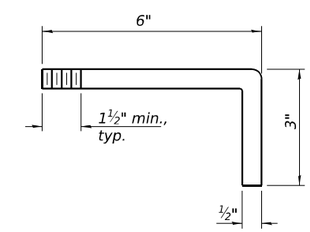

ANCHOR ROD DETAIL

BILL OF MATERIAL

ITEM	UNIT	QUANTITY
Drainage Scupper, DS-11	Each	6

DS-11

5-15-2023

WSP USA Inc.
30 N. LASALLE STREET
SUITE 4200
CHICAGO, IL 60602
TEL: (312) 782-8150
FAX: (312) 782-1684

USER NAME = USSJ696614	DESIGNED - PP	REVISED -	
	CHECKED - LAS	REVISED -	
PLOT SCALE = 0.16666000 ' / in.	DRAWN - PP	REVISED -	
PLOT DATE = 4/22/2025	CHECKED - LAS	REVISED -	

STATE OF ILLINOIS
DEPARTMENT OF TRANSPORTATION

DRAINAGE SCUPPER, DS-11
STRUCTURE NO. 099-0186

SHEET SA-35 OF SA-37 SHEETS

F.A.U RTE.	SECTION	COUNTY	TOTAL SHEETS	SHEET NO.
316	FAI 80 21 INTERCHANGE	WILL	1209	653
		CONTRACT NO. 62R22		
		ILLINOIS	FED. AID PROJECT	

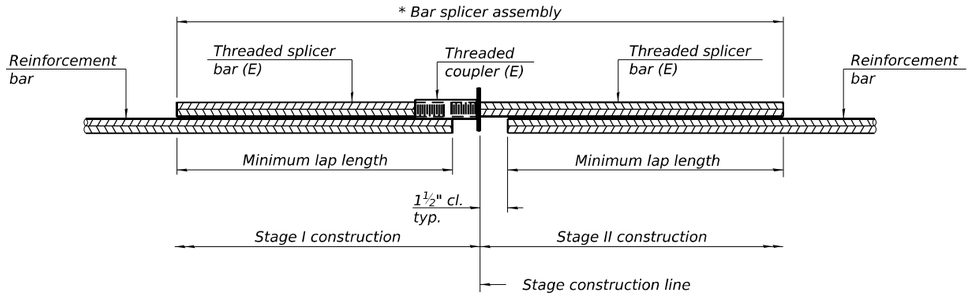

STANDARD BAR SPLICER ASSEMBLY PLAN

Only bar splicer assemblies as presented on the approved QPL list may be used.

Threaded splicer bar length = min. lap length + 1½" + thread length

* Epoxy not required on Bar Splicer Assembly components used in conjunction with black bars.

Location	Bar size	No. assemblies required	Minimum lap length
Top of Deck	#5	348	3'-6"
Bottom of Deck	#5	279	3'-6"
Diaphragm	#6	10	4'-0"
Diaphragm	#6	8	**
Diaphragm	#4	4	2'-5"
Approach Slab	#5	20	3'-0"
Approach Slab	#4	20	2'-5"
Approach Slab Footing	#5	80	3'-2"

** Splicer is not lapped, total length to be 3'-4".
See sheet SA-16.

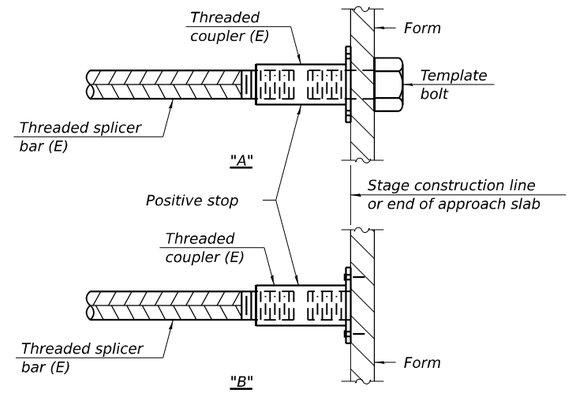

INSTALLATION AND SETTING METHODS

"A" : Set bar splicer assembly by means of a template bolt.
"B" : Set bar splicer assembly by nailing to wood forms or cementing to steel forms.
(E) : Indicates epoxy coating.

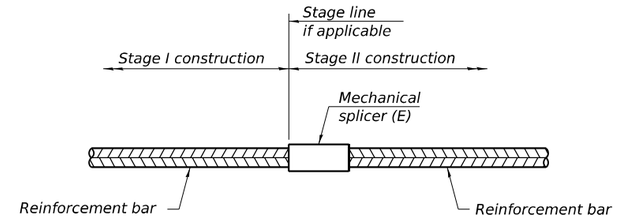

STANDARD MECHANICAL SPLICER

Location	Bar size	No. assemblies required

Notes:
Splicer bars shall be deformed with threaded ends and have a minimum 60 ksi yield strength.
All reinforcement shall be lapped and tied to the splicer bars.
Bar splicer assemblies shall be epoxy coated according to the requirements for reinforcement bars. See Section 508 of the Standard Specifications.
See approved list of bar splicer assemblies and mechanical splicers for alternatives.

BSD-1 5-15-2023

WSP USA Inc.
30 N. LASALLE STREET
SUITE 4200
CHICAGO, IL 60602
TEL: (312) 782-8150
FAX: (312) 782-1684

USER NAME = USSJ696614	DESIGNED - PP	REVISED -	
	CHECKED - LAS	REVISED -	
PLOT SCALE = 0.16666000 ' / in.	DRAWN - PP	REVISED -	
PLOT DATE = 4/22/2025	CHECKED - LAS	REVISED -	

STATE OF ILLINOIS
DEPARTMENT OF TRANSPORTATION

BAR SPLICER ASSEMBLY AND MECHANICAL SPLICER DETAILS
STRUCTURE NO. 099-0186

SHEET SA-36 OF SA-37 SHEETS

F.A.U RTE.	SECTION	COUNTY	TOTAL SHEETS	SHEET NO.
316	FAI 80 21 INTERCHANGE	WILL	1209	654
		CONTRACT NO. 62R22		
		ILLINOIS FED. AID PROJECT		

Illinois Department of Transportation
Division of Highways
GSG Consultants, Inc.

SOIL BORING LOG

Page 1 of 1

Date 9/26/22

ROUTE I-80 DESCRIPTION I-80 at Center Street over McDonough LOGGED BY DF

SECTION C-91-109-22 LOCATION , SEC. 16, TWP. 35 N, RNG. 10 E,
Latitude 41.5163995, Longitude -88.0950367

COUNTY Will DRILLING RIG CME-75 HAMMER TYPE Auto
DRILLING METHOD HSA HAMMER EFF (%) 80

STRUCT. NO. 099-0186
Station

BORING NO. BSB-101
Station 44+54.19
Offset 2.68ft LT
Ground Surface Elev. 601.23 ft

Surface Water Elev. N/A ft
Stream Bed Elev. N/A ft

Groundwater Elev.:
First Encounter Dry ft
Upon Completion N/A ft
After ___ Hrs. N/A ft

Description	Elev.	DEPTH (ft)	BLOWS (/6")	UCS Qu (tsf)	MOIST (%)
3 inches of Asphalt	600.98				
9 inches of Concrete	600.23				
7 inches of Aggregate Base Course	599.65		2		
Dark Brown, Moist FILL: SILTY CLAY, trace gravel			3 17	3.3 B	21
	597.23		3		
Brown, Moist FILL: SILTY CLAY, trace gravel		-5	3 5		21
			1		
			7 10	6.5 B	13
			2		
		-10	5 7	3.3 B	15
			2		
			4 11	3.8 B	19
	587.73				
Loose to Very Dense Light Brown, Dry GRAVEL, with cobble (GP)			4		
		-15	6 3		4
			32		
			26 25		4
	582.73				
Stiff Black, Moist SILTY CLAY, trace gravel			4		
	581.73		9		11
	581.23	-20	50/2"		
(CL/ML) Very Dense Light Brown, Moist Gravel, with cobble (GP)					
Split spoon refusal at 20 feet End of Boring					
		-25			
		-30			
		-35			
		-40			

The Unconfined Compressive Strength (UCS) Failure Mode is indicated by (B-Bulge, S-Shear, P-Penetrometer)
The SPT (N value) is the sum of the last two blow values in each sampling zone (AASHTO T206)

BBS, form 137 (Rev. 8-99)

Illinois Department of Transportation
Division of Highways
GSG Consultants, Inc.

SOIL BORING LOG

Page 1 of 1

Date 9/26/22

ROUTE I-80 DESCRIPTION I-80 at Center Street over McDonough LOGGED BY DF

SECTION C-91-109-22 LOCATION , SEC. 16, TWP. 35 N, RNG. 10 E,
Latitude 41.5158330, Longitude -88.0959315

COUNTY Will DRILLING RIG CME-75 HAMMER TYPE Auto
DRILLING METHOD HAS HAMMER EFF (%) 80

STRUCT. NO. 099-0186
Station

BORING NO. BSB-102
Station 41+33.57
Offset 0.64ft LT
Ground Surface Elev. 607.85 ft

Surface Water Elev. N/A ft
Stream Bed Elev. N/A ft

Groundwater Elev.:
First Encounter Dry ft
Upon Completion N/A ft
After ___ Hrs. N/A ft

Description	Elev.	DEPTH (ft)	BLOWS (/6")	UCS Qu (tsf)	MOIST (%)
3 inches of Asphalt	607.60				
9 inches of Concrete	606.85				
6 inches of Aggregate Base Course	606.35		3		
Brown, Moist FILL: SILTY CLAY, trace gravel			2 2	2.8 P	19
			2		
		-5	1 2	1.0 B	20
			2		
			5 6	2.7 B	15
			2		
		-10	3 4	1.7 B	20
			2		
	595.85		4 5	2.9 B	18
Gray, Moist FILL: SILTY CLAY, trace gravel					
			3		
		-15	4 7	3.5 B	20
			4		
			5 6	2.9 B	25
			3		
		-20	5 7	3.1 B	22
Gray, Moist FILL: SILTY CLAY, trace gravel (continued)	586.85		5		
Hard Brown, Moist SILTY CLAY, trace gravel (CL/ML)	584.35		5 6	4.2 B	23
Very Stiff Dark Brown and Black, Very Moist SILTY CLAY, with gravel (CL/ML)	582.85	-25	7 31 50/6"	3.0 P	42
Auger refual at 25 feet End of Boring					
		-30			
		-35			
		-40			

The Unconfined Compressive Strength (UCS) Failure Mode is indicated by (B-Bulge, S-Shear, P-Penetrometer)
The SPT (N value) is the sum of the last two blow values in each sampling zone (AASHTO T206)

BBS, form 137 (Rev. 8-99)

MODEL: Sheet
FILE NAME: pw://transystems-pw.bentley.com:transyscorp-pw1-hosted/Documents/Projects_2018/CH401/401180022/03-WSP/CAD/62R22-INT-4 (Center)/Sheets/Structural/SN-099-0186/0990186-62R22-SA-37-Boring Logs.dgn

WSP USA Inc.
30 N. LASALLE STREET
SUITE 4200
CHICAGO, IL 60602
TEL: (312) 782-8150
FAX: (312) 782-1684

USER NAME = USSJ696614	DESIGNED - MA	REVISED -	
	CHECKED - LAS	REVISED -	
PLOT SCALE = 7:11.99616 ':" / in.	DRAWN - MA	REVISED -	
PLOT DATE = 4/22/2025	CHECKED - LAS	REVISED -	

STATE OF ILLINOIS
DEPARTMENT OF TRANSPORTATION

SOIL BORING LOGS
STRUCTURE NO. 099-0186

SHEET SA-37 OF SA-37 SHEETS

F.A.U RTE.	SECTION	COUNTY	TOTAL SHEETS	SHEET NO.
316	FAI 80 21 INTERCHANGE	WILL	1209	655
		CONTRACT NO. 62R22		
	ILLINOIS	FED. AID PROJECT		

Benchmark: Chiseled "X" on top of SE bolt of Fire Hydrant at South ROW of Jasper St. (in front of 640 Jasper St. address), Elev. 585.86.

Existing Structure: S.N. 099-0188 was originally constructed in 1961 as a four (4) span structure with a skew carrying northbound Center Street Route 61 over eastbound and westbound I-80 (F.A.I. Route 80; Section 10 (Str. 5)). The bridge has an overall length of approximately 259'-6" (back-to back-abutments), an overall width that varies from 39'-5½" to 47'-10¼" (out-to-out superstructure), and consists of a 7"-thick reinforced concrete deck with 2" microsilica concrete overlay. The existing deck is supported by seven (7) steel beams spaced from 3'-7¼" to 8'-5¾" center-to-center spacing. The substructure consists of reinforced concrete abutments on battered steel piles and creosoted timber piles and reinforced concrete piers with spread footings on rock.

This structure will be removed prior to the construction of the proposed bridge at a location approximately 35′ (min.) to the east. Traffic will be detoured through the entirety of the construction of proposed bridge.

Salvage: None.

STATE OF ILLINOIS
MOUSSA A. ISSA
081-005738
CHICAGO, ILLINOIS
LICENSED STRUCTURAL ENGINEER

Signed Moussa A. Issa
Dr. Moussa A. Issa, S.E. IL. Lic. No. 081-005738
Expires 11-30-2026
Date 4/22/2025 For Sheets SB-01 Thru SB-48.

APPROVED
For Structural Adequacy Only
Engineer of Bridges & Structures

DESIGN SPECIFICATIONS

2020 AASHTO LRFD Bridge Design Specifications, 9th Edition

DESIGN STRESSES

FIELD UNITS

f'c = 4,000 psi (Superstructure)
f'c = 3,500 psi (Substructure)
fy = 60,000 psi (Reinforcement)
fy = 50,000 psi (M270 Grade 50)

LOADING HL-93

Allow 50#/sq.ft. for future wearing surface

SEISMIC DATA

Seismic Performance Zone (SPZ) = 1
Design Spectral Acceleration at 1.0 sec. (SD1) = 0.068 g
Design Spectral Acceleration at 0.2 sec. (SDS) = 0.126 g
Soil Site Class = C

† Piles within the Retaining Wall #6 (SN 099-W122) MSE Reinforced Soil Mass are required to have pile sleeves. The pile sleeves shall extend to the top of the leveling pad elevation.

* 1:6 (V:H) at Rt. L's

*** Varies from 17'-5" to 18'-0⅝"
**** Varies from 9'-7⅞" to 10'-10"
***** Varies from 76'-6⅜" to 74'-10" (Sta. 27+91.49 to Sta. 30+58.46)
Varies from 79'-9⅝" to 76'-6⅜" (Sta. 27+68.34 to Sta. 27+91.49)

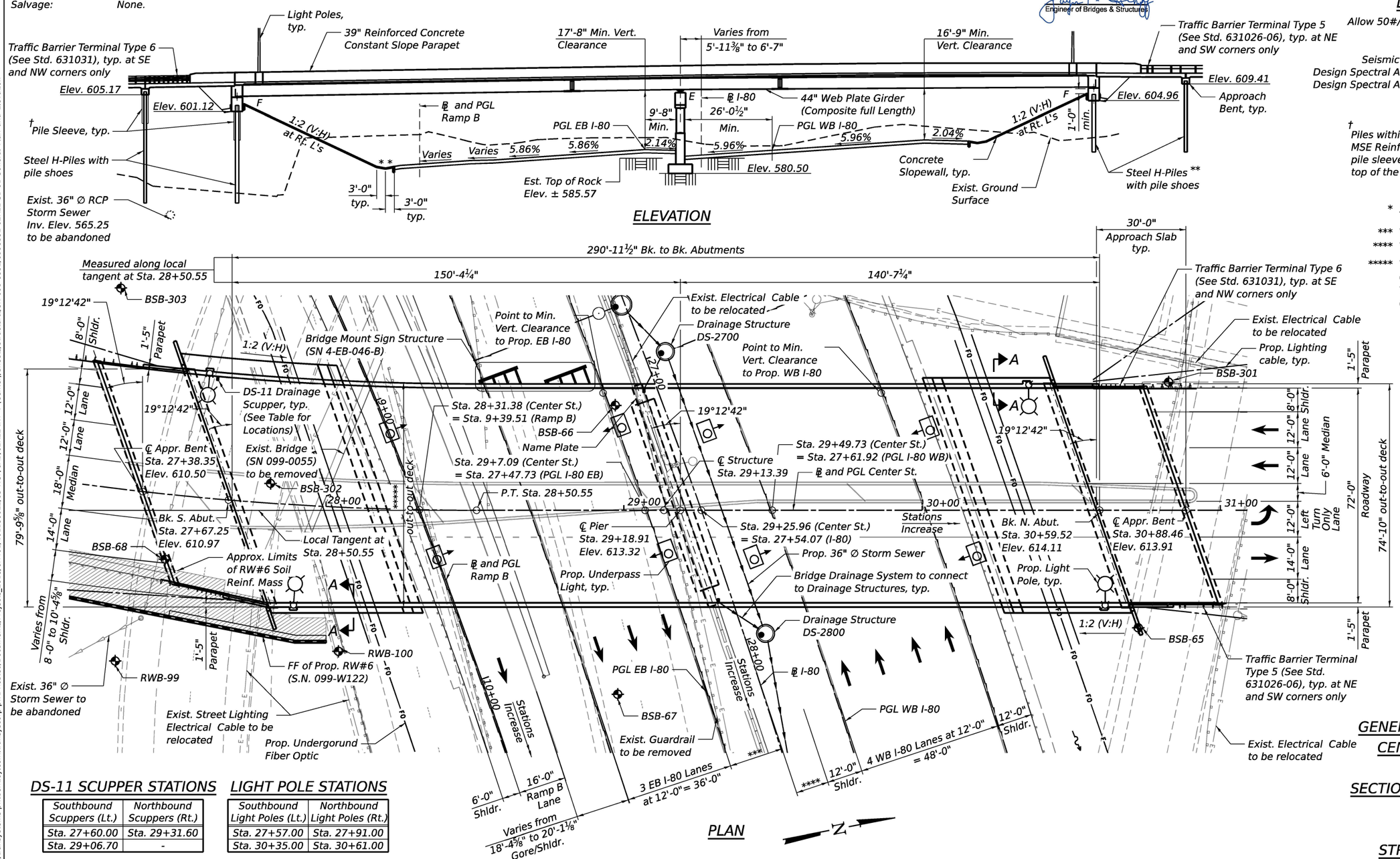

LEGEND

- Exist. Electrical Cable
- Exist. Storm Sewer
- Prop. Storm Sewer
- Prop. Pipe Underdrain
- Exist. Guardrail
- Exist. Light Pole
- Prop. Light Pole
- Prop. Underpass Light
- Soil Boring

Prop. Structure Range 10E, 3rd P.M.

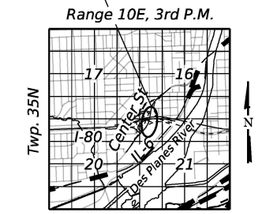

LOCATION SKETCH

DS-11 SCUPPER STATIONS

Southbound Scuppers (Lt.)	Northbound Scuppers (Rt.)
Sta. 27+60.00	Sta. 29+31.60
Sta. 29+06.70	-

LIGHT POLE STATIONS

Southbound Light Poles (Lt.)	Northbound Light Poles (Rt.)
Sta. 27+57.00	Sta. 27+91.00
Sta. 30+35.00	Sta. 30+61.00

GENERAL PLAN AND ELEVATION
CENTER STREET OVER I-80
F.A.I. ROUTE 80
SECTION- FAI 80 21 INTERCHANGE
WILL COUNTY
STA. 29+13.39
STRUCTURE NO. 099-8332

HBM ENGINEERING GROUP, LLC

USER NAME =	DESIGNED - PG	REVISED -
	CHECKED - MI	REVISED -
PLOT SCALE =	DRAWN - PG	REVISED -
PLOT DATE =	CHECKED - MI	REVISED -

STATE OF ILLINOIS
DEPARTMENT OF TRANSPORTATION

SHEET SB-01 OF SB-48 SHEETS

F.A.I. RTE.	SECTION	COUNTY	TOTAL SHEETS	SHEET NO.
80	FAI 80 21 INTERCHANGE	WILL	1209	656

CONTRACT NO. 62R22
ILLINOIS FED. AID PROJECT

MODEL: Default
FILE NAME: pw://transystems-pw.bentley.com:transyscorp-pw1-hosted/Documents/Projects_2018/CH401/401180022/03-WSP/CAD/62R22-INT-4 (Center)/Sheets/Structural/SN-099-8332/0998332-62R22-SB-01-General Plan and Elevation
4/24/2025 2:11:41 PM

GENERAL NOTES:

1. Fasteners shall be ASTM F3125 Grade A325 Type 1, hot dip galvanized bolts in metalized areas. Bolts $\frac{7}{8}$ in. diameter, holes $\frac{15}{16}$ in. diameter, unless otherwise noted. See Special Provision for "Metalizing of Structural Steel".

2. Calculated weight of Structural Steel = 1,264,450 lbs. (Grade 50).

3. All structural steel shall be AASHTO M270 Grade 50 and shall be metalized. See Special Provision for "Metalizing of Structural Steel".

4. No field welding is permitted except as specified in the contract documents.

5. Reinforcement bars designated (E) shall be epoxy coated.

6. Slipforming of the parapets is not allowed.

7. Bearing seat surfaces shall be constructed or adjusted to the designated elevations within a tolerance of $\frac{1}{8}$ inch (0.01 ft.). Adjustment shall be made either by grinding the surface or by shimming the bearings.

8. Concrete Sealer shall be applied to the designated areas of the pier.

9. Granular backfill behind the abutments shall be compacted according to Article 205.06 of the Standard Specifications.

10. Due to the plan variation in Nominal Required Bearing values at the substructures, the Contractor may need to provide more than one size of pile driving equipment. Cost included in Driving Piles.

INDEX OF SHEETS:

TOTAL BILL OF MATERIAL

ITEM	UNIT	SUPER	SUB	TOTAL
Structure Excavation	Cu Yd	-	793	793
Rock Excavation For Structures	Cu Yd	-	124	124
Concrete Structures	Cu Yd	-	354.9	354.9
Concrete Superstructure	Cu Yd	782.8	-	782.8
Bridge Deck Grooving	Sq Yd	2,742	-	2,742
Protective Coat	Sq Yd	3,127	-	3,127
Concrete Superstructure (Approach Slab)	Cu Yd	211.0	-	211.0
Furnishing And Erecting Structural Steel	L Sum	0.9	-	0.9
Stud Shear Connectors	Each	19,676	-	19,676
Reinforcement Bars, Epoxy Coated	Pound	272,360	86,100	358,460
Slope Wall 4 Inch	Sq Yd	-	909	909
Furnishing Steel Piles HP12X53	Foot	-	608	608
Furnishing Steel Piles HP14X117	Foot	-	720	720
Driving Piles	Foot	-	1,328	1,328
Test Pile Steel HP12X53	Each	-	2	2
Test Pile Steel HP14X117	Each	-	2	2
Pile Shoes	Each	-	48	48
Name Plates	Each	-	1	1
Anchor Bolts, 1"	Each	50	-	50
Anchor Bolts, 1 1/4"	Each	48	-	48
Drainage System For Structures	L Sum	1	-	1
Granular Backfill For Structures	Cu Yd	-	366	366
Concrete Sealer	Sq Ft	-	2,817	2,817
Geocomposite Wall Drain	Sq Yd	-	181	181
Pipe Underdrains For Structures 4"	Foot	-	210	210
Bar Terminators	Each	453	818	1,271
High Load Multi-Rotational Bearings, Disc, Guided Expansion-500K	Each	12	-	12
Drainage Scuppers, DS-11	Each	3	-	3

STA. 29+13.39
BUILT 20__ BY
STATE OF ILLINOIS
F.A.I. RTE. 80
SEC. FAI 80 21 INTERCHANGE
LOADING HL-93
STR. NO. 099-8332

NAME PLATE

See Std. 515001

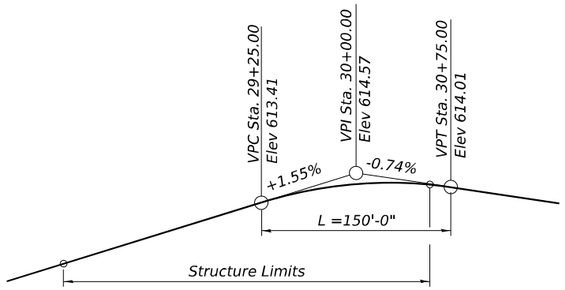

CENTER ST. PROFILE GRADE

(Along ℄ Roadway)

PR CURVE CENTER-3

PI Sta. = 25+64.87
Δ = 33° 44' 53" (LT)
D = 5° 43' 46"
R = 1000.00'
T = 303.33'
L = 589.01'
E = 44.99'
e = 0.03
T.R. = 80'
S.E. RUN = 160.00'
P.C. STA. = 22+61.54
P.T. STA. = 28+50.55

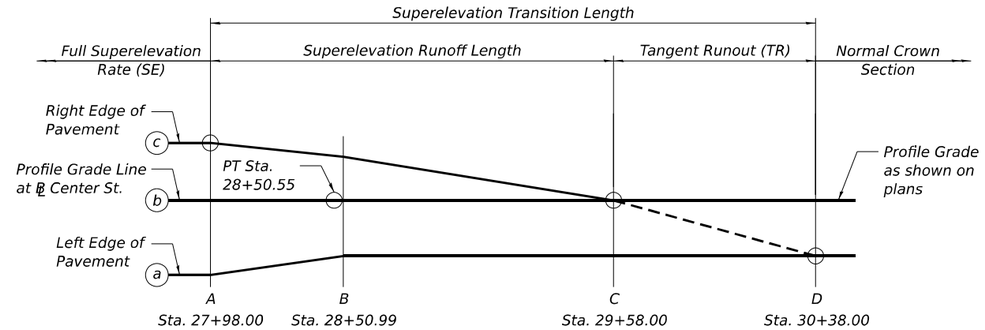

(LOOKING AT RT. L's TO ROADWAY)

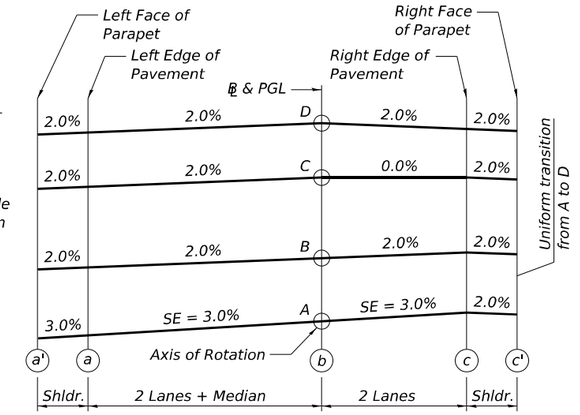

AXIS OF ROTATION ALONG BASELINE

(LOOKING ALONG BASELINE)

METHOD OF ATTAINING SUPERELVATION

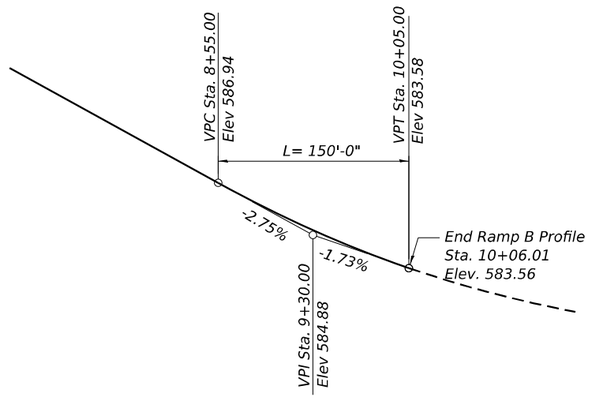

RAMP B PROFILE GRADE

(Along ℄ Roadway)

PR CURVE CENTER-B-4

PI Sta. = 13+34.70
Δ = 21° 26' 33" (RT)
D = 02° 31' 22"
R = 2,271.26'
T = 430.03'
L = 850.00
E = 40.35'
e = 0.0586
T.R. = N/A
S.E. RUN = N/A
P.C. STA. = 9+04.67
P.T. STA. = 17+54.67

PR CURVE CENTER-B-3

PI Sta. = 7+27.63
Δ = 24° 44' 45" (RT)
D = 06° 52' 42"
R = 833.00'
T = 182.73'
L = 359.77'
E = 19.81'
e = 0.06
T.R. = N/A
S.E. RUN = N/A
P.C. STA. = 5+44.90
P.T. STA. = 9+04.67

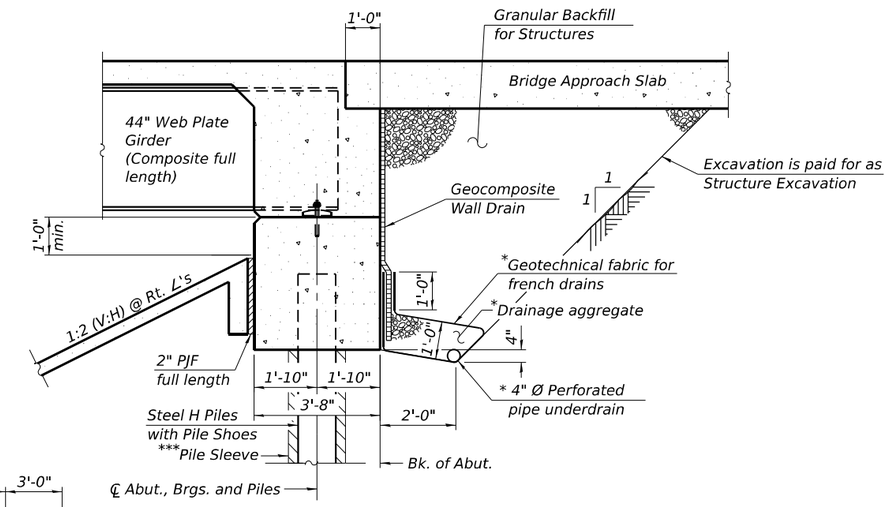

SECTION THRU INTEGRAL ABUTMENT

(Horiz. dim. at Rt. ∠'s)

* Included in the cost of Pipe Underdrains for Structures.

*** Only Piles within Retaining Wall #6 (SN 099-W122) MSE reinforced soil mass are required to have pile sleeves. The pile sleeves shall extend to the top of leveling pad elevation.

I-80 PROFILE GRADE

(Along ℄ Roadway)

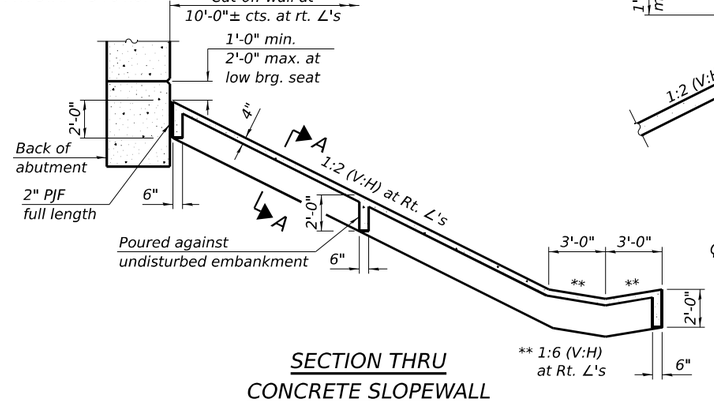

SECTION THRU CONCRETE SLOPEWALL

PR CURVE PR-I80-NORTH-2

PI Sta. = 29+63.27
Δ = 30° 49' 42" (RT)
D = 2° 29' 28"
R = 2300.00'
T = 634.14'
L = 1237.53'
E = 85.82'
e = 0.0586% (EB)
e = 0.0596% (WB)
T.R. = 89.00' (EB & WB)
S.E. RUN = 447.00' (WB)
S.E. RUN = 439.50' (EB)
P.C. STA. = 23+29.13
P.T. STA. = 35+66.66

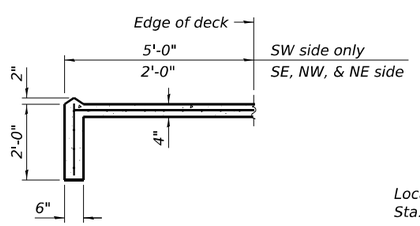

SECTION A-A

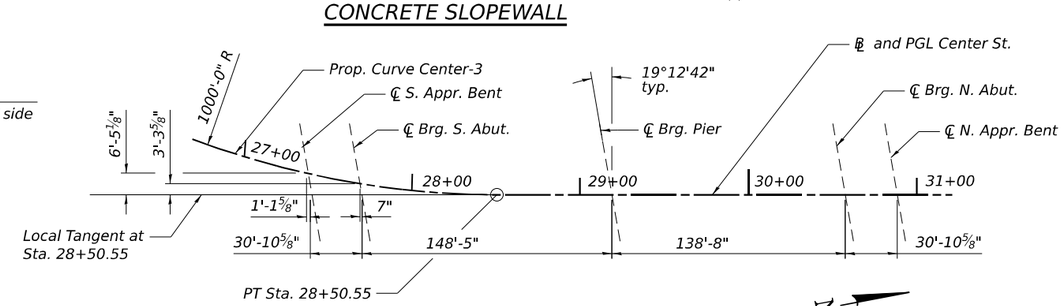

OFFSET SKETCH

NOTES:

1. All drainage system components shall extend to 2'-0" from the end of each wingwall except an outlet pipe shall extend until intersecting with the side slopes. The pipes shall drain into concrete headwalls. (See Article 601.05 of the StandardSpecifications and Highway Standard 601101).
2. Slope wall shall be reinforced with welded wire fabric, 6 in. x 6 in. – W4.0 x W4.0, weighing 58 lbs. per 100 sq. ft.

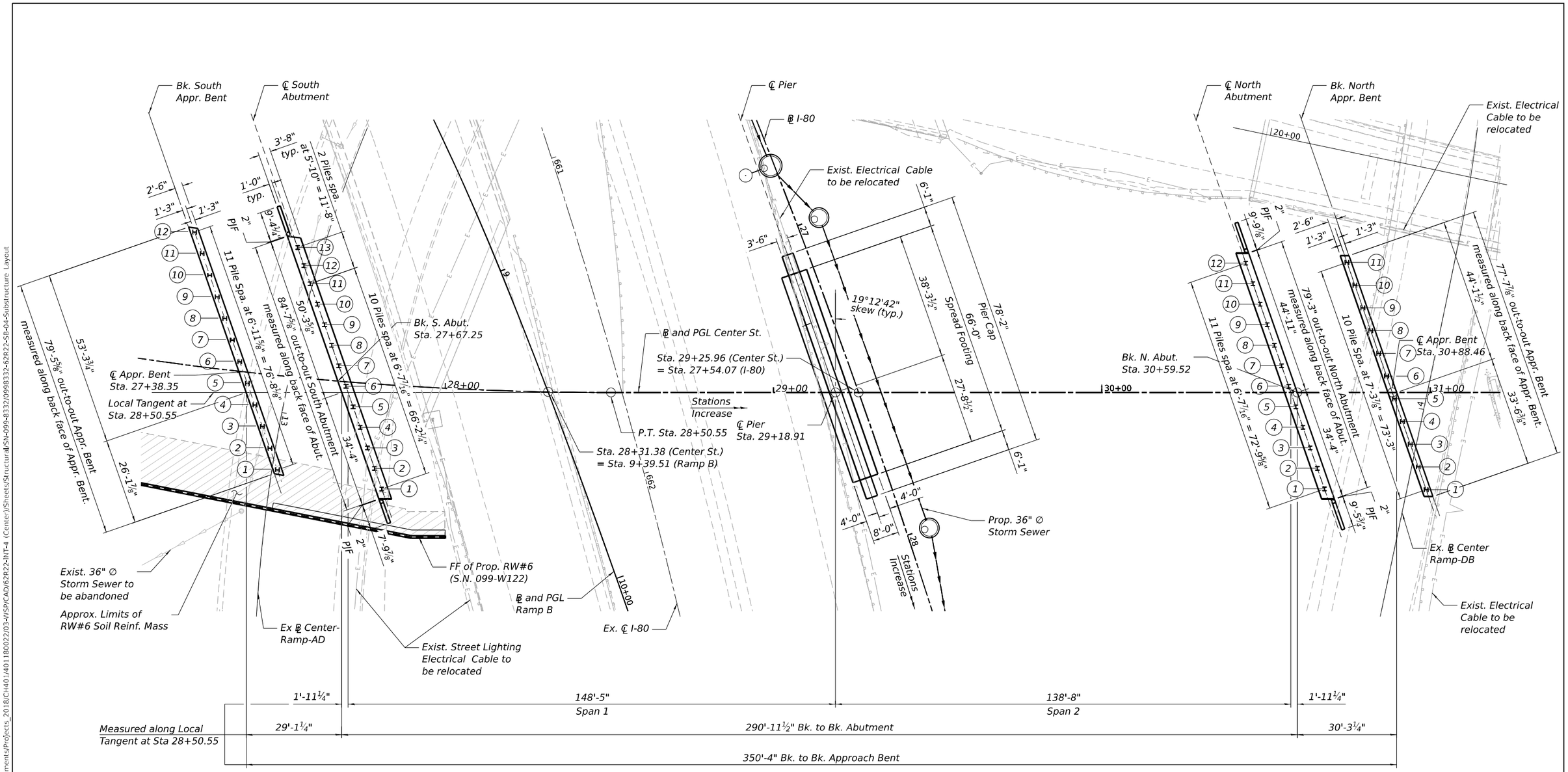

SUBSTRUCTURE LAYOUT

MODEL: Default
FILE NAME: pw://transystems-pw.bentley.com:transyscorp-pw1-hosted/Documents/Projects_2018/CH401/401180022/03-WSP/CAD/62R22-INT-4 (Center)/Sheets/Structural/SN-099-8332/0998332-62R22-SB-04-Substructure Layout

4/22/2025 4:09:58 PM

HBM ENGINEERING GROUP, LLC

USER NAME =	DESIGNED - PG	REVISED -	
	CHECKED - MI	REVISED -	
PLOT SCALE =	DRAWN - PG	REVISED -	
PLOT DATE =	CHECKED - MI	REVISED -	

STATE OF ILLINOIS
DEPARTMENT OF TRANSPORTATION

SUBSTRUCTURE LAYOUT
STRUCTURE NO. 099-8332

SHEET SB-04 OF SB-48 SHEETS

F.A.I. RTE.	SECTION	COUNTY	TOTAL SHEETS	SHEET NO.
80	FAI 80 21 INTERCHANGE	WILL	1209	659
		CONTRACT NO. 62R22		
	ILLINOIS	FED. AID PROJECT		

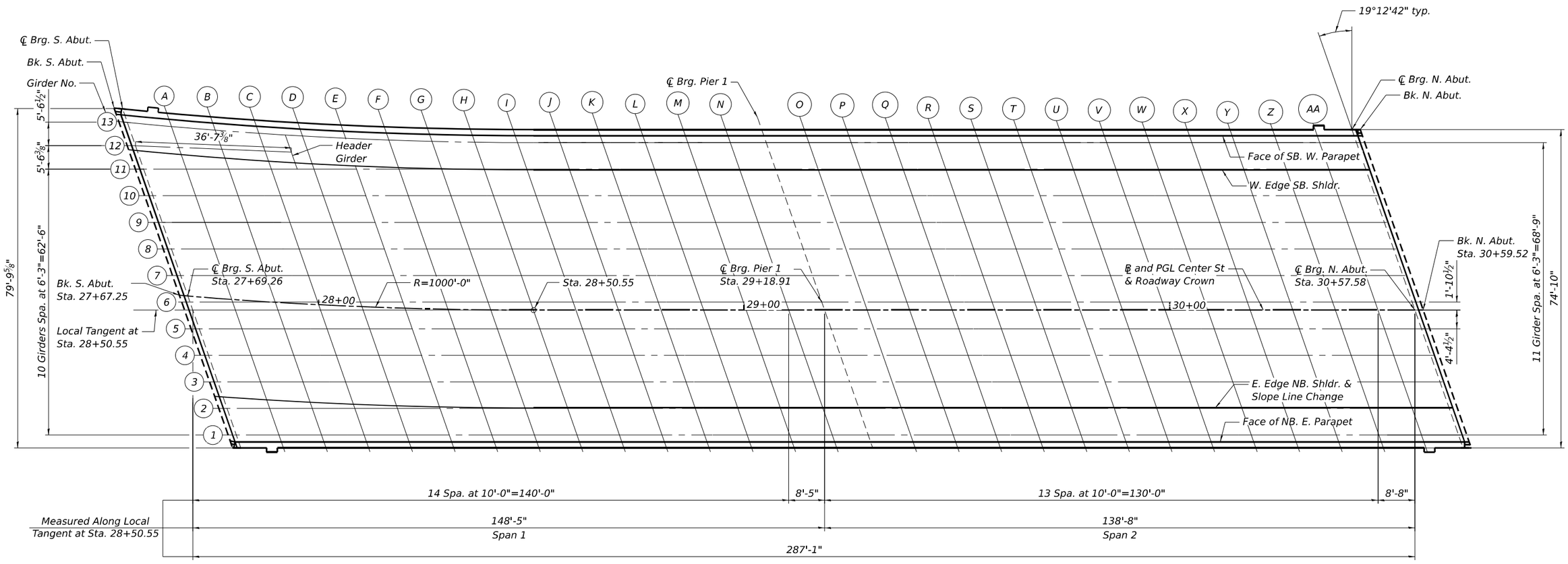

PLAN

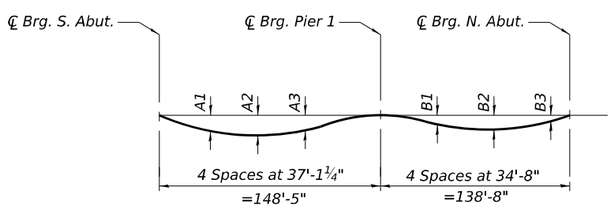

DEAD LOAD DEFLECTION DIAGRAM (GIRDER 1 THRU 11 & GIRDER 13)

(Includes weight of concrete only.)

Girder Number	Dead Load Deflection					
	Span 1			Span 2		
	A1	A2	A3	B1	B2	B3
G1	3⅜"	4"	1¾"	½"	2"	2"
G2 & G3	3"	3¾"	1¾"	1"	1⅞"	1⅞"
G4 Thru G9	2¾"	3½"	1½"	½"	1⅝"	1⅝"
G10 & G11	2¾"	3½"	1½"	½"	1½"	1½"
G13	3"	3¾"	1¾"	¼"	1½"	1½"

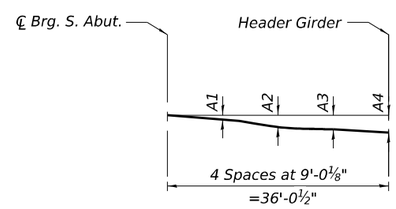

DEAD LOAD DEFLECTION DIAGRAM (GIRDER 12)

(Includes weight of concrete only.)

Girder Number	Dead Load Deflection			
	Span 1			
	A1	A2	A3	A4
G12	1"	2"	2½"	3"

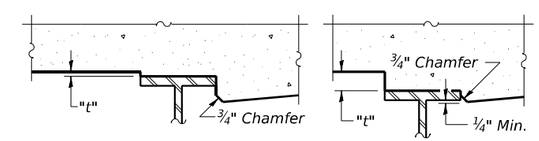

At Minimum Fillet At Maximum Fillet

To determine "t": After all structural steel has been erected, elevations of the top flanges of the beams shall be taken at intervals shown below. These elevations subtracted from the "Theoretical Grade Elevations Adjusted for Dead Load Deflection" shown on Sheets SB-06 thru SB-08 , minus slab thickness, equals the fillet heights "t" above top flange of beams.

FILLET HEIGHTS

NOTES:

1. The above deflections are not to be used in the field if the engineer is working from the grade elevations adjusted for dead load deflections as shown on Sheets SB-06 thru SB-08
2. The deflection at the north end of Girder 12 is due to the overall movement of the structure, between Girder 11 and Girder 13.

FACE OF NB. E. PARAPET

Location	Station	Offset	Theoretical Grade Elevations	Theoretical Grade Elevations Adjusted For Dead Load Deflection
Bk. S. Abut.	27+81.51	33.22'	611.68	611.68
℄ Brg. S. Abut.	27+83.48	33.32'	611.70	611.70
A	27+93.14	32.70'	611.87	611.96
B	28+02.82	32.18'	612.01	612.18
C	28+12.50	31.75'	612.12	612.37
D	28+22.19	31.42'	612.24	612.54
E	28+31.88	31.18'	612.35	612.69
F	28+41.58	31.04'	612.46	612.81
G	28+51.30	31.00'	612.57	612.91
H	28+61.30	31.00'	612.68	613.00
I	28+71.30	31.00'	612.79	613.07
J	28+81.30	31.00'	612.90	613.12
K	28+91.30	31.00'	613.02	613.18
L	29+01.30	31.00'	613.13	613.23
M	29+11.30	31.00'	613.24	613.29
N	29+21.30	31.00'	613.35	613.37
℄ Brg. Pier 1	29+29.72	31.00'	613.44	613.44
O	29+39.72	31.00'	613.54	613.54
P	29+49.72	31.00'	613.62	613.63
Q	29+59.72	31.00'	613.68	613.72
R	29+69.72	31.00'	613.72	613.79
S	29+79.72	31.00'	613.74	613.85
T	29+89.72	31.00'	613.75	613.89
U	29+99.72	31.00'	613.74	613.91
V	30+09.72	31.00'	613.71	613.90
W	30+19.72	31.00'	613.67	613.87
X	30+29.72	31.00'	613.62	613.80
Y	30+39.72	31.00'	613.56	613.70
Z	30+49.72	31.00'	613.53	613.63
AA	30+59.72	31.00'	613.49	613.54
℄ Brg. N. Abut.	30+68.38	31.00'	613.44	613.44
Bk. N. Abut.	30+70.32	31.00'	613.42	613.42

GIRDER 1

Location	Station	Offset	Theoretical Grade Elevations	Theoretical Grade Elevations Adjusted For Dead Load Deflection
Bk. S. Abut.	27+80.95	31.87'	611.69	611.69
℄ Brg. S. Abut.	27+82.83	31.74'	611.73	611.73
A	27+92.50	31.11'	611.89	611.98
B	28+02.19	30.58'	612.03	612.21
C	28+11.89	30.14'	612.15	612.40
D	28+21.59	29.81'	612.26	612.57
E	28+31.30	29.57'	612.37	612.72
F	28+41.01	29.42'	612.49	612.84
G	28+50.73	29.37'	612.60	612.94
H	28+60.73	29.37'	612.71	613.03
I	28+70.73	29.37'	612.82	613.09
J	28+80.73	29.37'	612.93	613.15
K	28+90.73	29.37'	613.04	613.21
L	29+00.73	29.37'	613.15	613.26
M	29+10.73	29.37'	613.27	613.32
N	29+20.73	29.37'	613.38	613.40
℄ Brg. Pier 1	29+29.15	29.37'	613.47	613.47
O	29+39.15	29.37'	613.57	613.56
P	29+49.15	29.37'	613.65	613.66
Q	29+59.15	29.37'	613.72	613.75
R	29+69.15	29.37'	613.75	613.82
S	29+79.15	29.37'	613.77	613.88
T	29+89.15	29.37'	613.78	613.92
U	29+99.15	29.37'	613.77	613.94
V	30+09.15	29.37'	613.75	613.94
W	30+19.15	29.37'	613.71	613.90
X	30+29.15	29.37'	613.66	613.83
Y	30+39.15	29.37'	613.59	613.74
Z	30+49.15	29.37'	613.56	613.67
AA	30+59.15	29.37'	613.52	613.57
℄ Brg. N. Abut.	30+67.82	29.37'	613.47	613.47
Bk. N. Abut.	30+69.76	29.37'	613.46	613.46

GIRDER 2

Location	Station	Offset	Theoretical Grade Elevations	Theoretical Grade Elevations Adjusted For Dead Load Deflection
Bk. S. Abut.	27+78.41	25.79'	611.78	611.78
℄ Brg. S. Abut.	27+80.30	25.66'	611.81	611.81
A	27+90.03	25.00'	611.97	612.06
B	27+99.77	24.45'	612.13	612.29
C	28+09.53	23.99'	612.24	612.48
D	28+19.29	23.63'	612.36	612.65
E	28+29.05	23.36'	612.47	612.79
F	28+38.83	23.20'	612.59	612.92
G	28+48.60	23.13'	612.70	613.02
H	28+58.55	23.12'	612.81	613.10
I	28+68.55	23.12'	612.92	613.18
J	28+78.55	23.12'	613.03	613.23
K	28+88.55	23.12'	613.14	613.29
L	28+98.55	23.12'	613.25	613.35
M	29+08.55	23.12'	613.37	613.42
N	29+18.55	23.12'	613.47	613.49
℄ Brg. Pier 1	29+26.97	23.12'	613.57	613.57
O	29+36.97	23.12'	613.67	613.67
P	29+46.97	23.12'	613.76	613.77
Q	29+56.97	23.12'	613.83	613.86
R	29+66.97	23.12'	613.87	613.94
S	29+76.97	23.12'	613.90	614.00
T	29+86.97	23.12'	613.91	614.04
U	29+96.97	23.12'	613.90	614.06
V	30+06.97	23.12'	613.88	614.05
W	30+16.97	23.12'	613.84	614.02
X	30+26.97	23.12'	613.79	613.96
Y	30+36.97	23.12'	613.73	613.86
Z	30+46.97	23.12'	613.70	613.79
AA	30+56.97	23.12'	613.66	613.70
℄ Brg. N. Abut.	30+65.64	23.12'	613.61	613.61
Bk. N. Abut.	30+67.58	23.12'	613.60	613.60

E. EDGE NB. SHLDR & SLOPE LINE CHANGE

Location	Station	Offset	Theoretical Grade Elevations	Theoretical Grade Elevations Adjusted For Dead Load Deflection
Bk. S. Abut.	27+77.23	23.00'	611.81	611.81
℄ Brg. S. Abut.	27+79.18	23.00'	611.84	611.84
A	27+89.21	23.00'	612.00	612.09
B	27+99.20	23.00'	612.15	612.32
C	28+09.15	23.00'	612.26	612.49
D	28+19.05	23.00'	612.37	612.66
E	28+28.92	23.00'	612.48	612.80
F	28+38.76	23.00'	612.59	612.92
G	28+48.56	23.00'	612.70	613.02
H	28+58.51	23.00'	612.81	613.11
I	28+68.51	23.00'	612.92	613.18
J	28+78.51	23.00'	613.03	613.24
K	28+88.51	23.00'	613.14	613.30
L	28+98.51	23.00'	613.26	613.36
M	29+08.51	23.00'	613.37	613.42
N	29+18.51	23.00'	613.48	613.49
℄ Brg. Pier 1	29+26.93	23.00'	613.57	613.57
O	29+36.93	23.00'	613.67	613.67
P	29+46.93	23.00'	613.76	613.77
Q	29+56.93	23.00'	613.83	613.86
R	29+66.93	23.00'	613.87	613.94
S	29+76.93	23.00'	613.90	614.00
T	29+86.93	23.00'	613.91	614.04
U	29+96.93	23.00'	613.90	614.06
V	30+06.93	23.00'	613.88	614.06
W	30+16.93	23.00'	613.85	614.02
X	30+26.93	23.00'	613.80	613.96
Y	30+36.93	23.00'	613.73	613.87
Z	30+46.93	23.00'	613.70	613.79
AA	30+56.93	23.00'	613.66	613.71
℄ Brg. N. Abut.	30+65.59	23.00'	613.61	613.61
Bk. N. Abut.	30+67.54	23.00'	613.60	613.60

GIRDER 3

Location	Station	Offset	Theoretical Grade Elevations	Theoretical Grade Elevations Adjusted For Dead Load Deflection
Bk. S. Abut.	27+75.84	19.72'	611.69	611.69
℄ Brg. S. Abut.	27+77.74	19.58'	611.72	611.72
A	27+87.53	18.90'	611.85	611.93
B	27+97.33	18.32'	611.98	612.14
C	28+07.14	17.83'	612.09	612.32
D	28+16.96	17.45'	612.20	612.48
E	28+26.78	17.16'	612.31	612.62
F	28+36.61	16.97'	612.43	612.75
G	28+46.45	16.88'	612.55	612.86
H	28+56.38	16.87'	612.67	612.95
I	28+66.38	16.87'	612.79	613.04
J	28+76.38	16.87'	612.92	613.11
K	28+86.38	16.87'	613.04	613.18
L	28+96.38	16.87'	613.16	613.26
M	29+06.38	16.87'	613.28	613.33
N	29+16.38	16.87'	613.41	613.43
℄ Brg. Pier 1	29+24.79	16.87'	613.51	613.51
O	29+34.79	16.87'	613.63	613.62
P	29+44.79	16.87'	613.73	613.74
Q	29+54.79	16.87'	613.81	613.85
R	29+64.79	16.87'	613.88	613.94
S	29+74.79	16.87'	613.92	614.01
T	29+84.79	16.87'	613.95	614.07
U	29+94.79	16.87'	613.96	614.11
V	30+04.79	16.87'	613.96	614.13
W	30+14.79	16.87'	613.94	614.11
X	30+24.79	16.87'	613.91	614.07
Y	30+34.79	16.87'	613.86	613.99
Z	30+44.79	16.87'	613.83	613.92
AA	30+54.79	16.87'	613.79	613.84
℄ Brg. N. Abut.	30+63.46	16.87'	613.75	613.75
Bk. N. Abut.	30+65.40	16.87'	613.74	613.74

GIRDER 4

Location	Station	Offset	Theoretical Grade Elevations	Theoretical Grade Elevations Adjusted For Dead Load Deflection
Bk. S. Abut.	27+73.23	13.65'	611.47	611.47
℄ Brg. S. Abut.	27+75.14	13.51'	611.50	611.50
A	27+84.99	12.80'	611.63	611.71
B	27+94.85	12.20'	611.76	611.91
C	28+04.72	11.69'	611.89	612.09
D	28+14.60	11.28'	612.01	612.26
E	28+24.48	10.97'	612.13	612.41
F	28+34.37	10.76'	612.26	612.55
G	28+44.27	10.64'	612.39	612.67
H	28+54.20	10.62'	612.52	612.78
I	28+64.20	10.62'	612.66	612.88
J	28+74.20	10.62'	612.79	612.97
K	28+84.20	10.62'	612.93	613.06
L	28+94.20	10.62'	613.06	613.15
M	29+04.20	10.62'	613.20	613.24
N	29+14.20	10.62'	613.33	613.35
℄ Brg. Pier 1	29+22.62	10.62'	613.44	613.44
O	29+32.62	10.62'	613.57	613.57
P	29+42.62	10.62'	613.69	613.70
Q	29+52.62	10.62'	613.79	613.82
R	29+62.62	10.62'	613.87	613.93
S	29+72.62	10.62'	613.93	614.02
T	29+82.62	10.62'	613.98	614.10
U	29+92.62	10.62'	614.01	614.15
V	30+02.62	10.62'	614.03	614.18
W	30+12.62	10.62'	614.03	614.19
X	30+22.62	10.62'	614.02	614.16
Y	30+32.62	10.62'	613.99	614.11
Z	30+42.62	10.62'	613.96	614.04
AA	30+52.62	10.62'	613.93	613.97
℄ Brg. N. Abut.	30+61.28	10.62'	613.89	613.89
Bk. N. Abut.	30+63.22	10.62'	613.87	613.87

NOTES:

1. All Elevations and Offsets are in feet.
2. Offsets are measured with respect to ℄ Center Street. Negative offsets are left and positive are right of the centerline.

HBM ENGINEERING GROUP, LLC

USER NAME =	DESIGNED - ANS	REVISED -
	CHECKED - LAB	REVISED -
PLOT SCALE =	DRAWN - ANS	REVISED -
PLOT DATE =	CHECKED - LAB	REVISED -

STATE OF ILLINOIS
DEPARTMENT OF TRANSPORTATION

TOP OF SLAB ELEVATIONS TABLES (SHEET 1 OF 3)
STRUCTURE NO. 099-8332

SHEET SB-06 OF SB-48 SHEETS

F.A.I. RTE.	SECTION	COUNTY	TOTAL SHEETS	SHEET NO.
80	FAI 80 21 INTERCHANGE	WILL	1209	661
		CONTRACT NO. 62R22		
		ILLINOIS FED. AID PROJECT		

GIRDER 5

Location	Station	Offset	Theoretical Grade Elevations	Theoretical Grade Elevations Adjusted For Dead Load Deflection
Bk. S. Abut.	27+70.60	7.59'	611.25	611.25
℄ Brg. S. Abut.	27+72.52	7.44'	611.27	611.27
A	27+82.42	6.71'	611.41	611.48
B	27+92.34	6.08'	611.54	611.69
C	28+02.27	5.55'	611.67	611.88
D	28+12.21	5.11'	611.81	612.06
E	28+22.15	4.78'	611.94	612.22
F	28+32.10	4.55'	612.08	612.37
G	28+42.06	4.41'	612.22	612.51
H	28+52.02	4.37'	612.37	612.63
I	28+62.02	4.37'	612.51	612.74
J	28+72.02	4.37'	612.66	612.84
K	28+82.02	4.37'	612.81	612.94
L	28+92.02	4.37'	612.95	613.04
M	29+02.02	4.37'	613.10	613.15
N	29+12.02	4.37'	613.25	613.26
℄ Brg. Pier 1	29+20.44	4.37'	613.37	613.37
O	29+30.44	4.37'	613.51	613.51
P	29+40.44	4.37'	613.64	613.65
Q	29+50.44	4.37'	613.76	613.79
R	29+60.44	4.37'	613.86	613.91
S	29+70.44	4.37'	613.94	614.03
T	29+80.44	4.37'	614.01	614.12
U	29+90.44	4.37'	614.06	614.20
V	30+00.44	4.37'	614.10	614.25
W	30+10.44	4.37'	614.12	614.27
X	30+20.44	4.37'	614.12	614.26
Y	30+30.44	4.37'	614.11	614.23
Z	30+40.44	4.37'	614.09	614.17
AA	30+50.44	4.37'	614.06	614.10
℄ Brg. N. Abut.	30+59.10	4.37'	614.02	614.02
Bk. N. Abut.	30+61.05	4.37'	614.01	614.01

℄ AND PGL CENTER ST & ROADWAY CROWN

Location	Station	Offset	Theoretical Grade Elevations	Theoretical Grade Elevations Adjusted For Dead Load Deflection
Bk. S. Abut.	27+67.25	0.00'	610.97	610.97
℄ Brg. S. Abut.	27+69.26	0.00'	611.00	611.00
A	27+79.56	0.00'	611.16	611.24
B	27+89.82	0.00'	611.32	611.47
C	28+00.03	0.00'	611.48	611.68
D	28+10.20	0.00'	611.63	611.89
E	28+20.33	0.00'	611.79	612.07
F	28+30.42	0.00'	611.95	612.24
G	28+40.48	0.00'	612.10	612.39
H	28+50.50	0.00'	612.26	612.52
I	28+60.50	0.00'	612.41	612.64
J	28+70.50	0.00'	612.57	612.75
K	28+80.50	0.00'	612.72	612.86
L	28+90.50	0.00'	612.88	612.96
M	29+00.50	0.00'	613.03	613.08
N	29+10.50	0.00'	613.19	613.20
℄ Brg. Pier 1	29+18.91	0.00'	613.32	613.32
O	29+28.91	0.00'	613.47	613.47
P	29+38.91	0.00'	613.61	613.62
Q	29+48.91	0.00'	613.74	613.76
R	29+58.91	0.00'	613.85	613.90
S	29+68.91	0.00'	613.94	614.03
T	29+78.91	0.00'	614.02	614.13
U	29+88.91	0.00'	614.09	614.22
V	29+98.91	0.00'	614.14	614.29
W	30+08.91	0.00'	614.17	614.32
X	30+18.91	0.00'	614.19	614.33
Y	30+28.91	0.00'	614.19	614.31
Z	30+38.91	0.00'	614.18	614.26
AA	30+48.91	0.00'	614.15	614.19
℄ Brg. N. Abut.	30+57.58	0.00'	614.12	614.12
Bk. N. Abut.	30+59.52	0.00'	614.11	614.11

GIRDER 6

Location	Station	Offset	Theoretical Grade Elevations	Theoretical Grade Elevations Adjusted For Dead Load Deflection
Bk. S. Abut.	27+67.93	1.54'	610.93	610.93
℄ Brg. S. Abut.	27+69.87	1.38'	610.97	610.97
A	27+79.83	0.63'	611.15	611.22
B	27+89.80	-0.03'	611.32	611.46
C	27+99.79	-0.59'	611.46	611.66
D	28+09.79	-1.05'	611.60	611.85
E	28+19.79	-1.40'	611.75	612.03
F	28+29.81	-1.66'	611.90	612.19
G	28+39.82	-1.82'	612.05	612.33
H	28+49.84	-1.87'	612.21	612.47
I	28+59.84	-1.88'	612.36	612.59
J	28+69.84	-1.88'	612.52	612.70
K	28+79.84	-1.88'	612.67	612.81
L	28+89.84	-1.88'	612.83	612.92
M	28+99.84	-1.88'	612.98	613.03
N	29+09.84	-1.88'	613.14	613.15
℄ Brg. Pier 1	29+18.26	-1.88'	613.27	613.27
O	29+28.26	-1.88'	613.42	613.42
P	29+38.26	-1.88'	613.56	613.57
Q	29+48.26	-1.88'	613.69	613.72
R	29+58.26	-1.88'	613.80	613.86
S	29+68.26	-1.88'	613.90	613.98
T	29+78.26	-1.88'	613.98	614.09
U	29+88.26	-1.88'	614.04	614.18
V	29+98.26	-1.88'	614.10	614.25
W	30+08.26	-1.88'	614.13	614.28
X	30+18.26	-1.88'	614.15	614.29
Y	30+28.26	-1.88'	614.15	614.27
Z	30+38.26	-1.88'	614.14	614.23
AA	30+48.26	-1.88'	614.12	614.16
℄ Brg. N. Abut.	30+56.93	-1.88'	614.08	614.08
Bk. N. Abut.	30+58.87	-1.88'	614.07	614.07

GIRDER 7

Location	Station	Offset	Theoretical Grade Elevations	Theoretical Grade Elevations Adjusted For Dead Load Deflection
Bk. S. Abut.	27+65.24	-4.50'	610.80	610.80
℄ Brg. S. Abut.	27+67.18	-4.67'	610.83	610.83
A	27+77.20	-5.45'	610.96	611.04
B	27+87.23	-6.13'	611.10	611.24
C	27+97.28	-6.72'	611.23	611.44
D	28+07.34	-7.20'	611.39	611.64
E	28+17.41	-7.58'	611.55	611.83
F	28+27.48	-7.86'	611.71	612.00
G	28+37.56	-8.04'	611.88	612.16
H	28+47.64	-8.12'	612.05	612.31
I	28+57.66	-8.13'	612.21	612.43
J	28+67.66	-8.13'	612.36	612.54
K	28+77.66	-8.13'	612.52	612.65
L	28+87.66	-8.13'	612.67	612.76
M	28+97.66	-8.13'	612.82	612.87
N	29+07.66	-8.13'	612.98	613.00
℄ Brg. Pier 1	29+16.08	-8.13'	613.11	613.11
O	29+26.08	-8.13'	613.26	613.26
P	29+36.08	-8.13'	613.41	613.42
Q	29+46.08	-8.13'	613.54	613.57
R	29+56.08	-8.13'	613.65	613.71
S	29+66.08	-8.13'	613.75	613.84
T	29+76.08	-8.13'	613.84	613.95
U	29+86.08	-8.13'	613.91	614.04
V	29+96.08	-8.13'	613.96	614.11
W	30+06.08	-8.13'	614.00	614.15
X	30+16.08	-8.13'	614.02	614.16
Y	30+26.08	-8.13'	614.03	614.15
Z	30+36.08	-8.13'	614.02	614.10
AA	30+46.08	-8.13'	614.00	614.04
℄ Brg. N. Abut.	30+54.75	-8.13'	613.97	613.97
Bk. N. Abut.	30+56.69	-8.13'	613.96	613.96

GIRDER 8

Location	Station	Offset	Theoretical Grade Elevations	Theoretical Grade Elevations Adjusted For Dead Load Deflection
Bk. S. Abut.	27+62.50	-10.54'	610.58	610.58
℄ Brg. S. Abut.	27+64.46	-10.71'	610.61	610.61
A	27+74.54	-11.52'	610.74	610.81
B	27+84.63	-12.23'	610.87	611.02
C	27+94.74	-12.84'	611.01	611.22
D	28+04.86	-13.35'	611.17	611.42
E	28+14.99	-13.75'	611.34	611.62
F	28+25.13	-14.06'	611.52	611.81
G	28+35.27	-14.26'	611.69	611.98
H	28+45.41	-14.36'	611.88	612.14
I	28+55.49	-14.38'	612.05	612.27
J	28+65.49	-14.38'	612.20	612.38
K	28+75.49	-14.38'	612.36	612.49
L	28+85.49	-14.38'	612.51	612.60
M	28+95.49	-14.38'	612.67	612.71
N	29+05.49	-14.38'	612.82	612.84
℄ Brg. Pier 1	29+13.90	-14.38'	612.95	612.95
O	29+23.90	-14.38'	613.11	613.10
P	29+33.90	-14.38'	613.25	613.26
Q	29+43.90	-14.38'	613.39	613.42
R	29+53.90	-14.38'	613.51	613.56
S	29+63.90	-14.38'	613.61	613.69
T	29+73.90	-14.38'	613.70	613.81
U	29+83.90	-14.38'	613.77	613.91
V	29+93.90	-14.38'	613.83	613.98
W	30+03.90	-14.38'	613.87	614.02
X	30+13.90	-14.38'	613.89	614.03
Y	30+23.90	-14.38'	613.90	614.02
Z	30+33.90	-14.38'	613.90	613.98
AA	30+43.90	-14.38'	613.88	613.92
℄ Brg. N. Abut.	30+52.57	-14.38'	613.85	613.85
Bk. N. Abut.	30+54.51	-14.38'	613.84	613.84

GIRDER 9

Location	Station	Offset	Theoretical Grade Elevations	Theoretical Grade Elevations Adjusted For Dead Load Deflection
Bk. S. Abut.	27+59.74	-16.57'	610.36	610.36
℄ Brg. S. Abut.	27+61.71	-16.75'	610.38	610.38
A	27+71.85	-17.58'	610.51	610.59
B	27+82.00	-18.32'	610.65	610.79
C	27+92.17	-18.95'	610.79	610.99
D	28+02.35	-19.49'	610.94	611.20
E	28+12.54	-19.92'	611.13	611.41
F	28+22.74	-20.25'	611.32	611.61
G	28+32.95	-20.47'	611.51	611.79
H	28+43.16	-20.60'	611.70	611.96
I	28+53.31	-20.63'	611.89	612.11
J	28+63.31	-20.63'	612.04	612.22
K	28+73.31	-20.63'	612.20	612.33
L	28+83.31	-20.63'	612.35	612.44
M	28+93.31	-20.63'	612.51	612.55
N	29+03.31	-20.63'	612.66	612.68
℄ Brg. Pier 1	29+11.73	-20.63'	612.79	612.79
O	29+21.73	-20.63'	612.95	612.94
P	29+31.73	-20.63'	613.10	613.11
Q	29+41.73	-20.63'	613.23	613.26
R	29+51.73	-20.63'	613.36	613.41
S	29+61.73	-20.63'	613.46	613.55
T	29+71.73	-20.63'	613.55	613.67
U	29+81.73	-20.63'	613.63	613.77
V	29+91.73	-20.63'	613.69	613.84
W	30+01.73	-20.63'	613.73	613.89
X	30+11.73	-20.63'	613.76	613.91
Y	30+21.73	-20.63'	613.78	613.90
Z	30+31.73	-20.63'	613.78	613.86
AA	30+41.73	-20.63'	613.76	613.80
℄ Brg. N. Abut.	30+50.39	-20.63'	613.73	613.73
Bk. N. Abut.	30+52.33	-20.63'	613.73	613.73

NOTES:

1. All Elevations and Offsets are in feet.
2. Offsets are measured with respect to ℄ Center Street. Negative offsets are left and positive are right of the centerline.

GIRDER 10

Location	Station	Offset	Theoretical Grade Elevations	Theoretical Grade Elevations Adjusted For Dead Load Deflection
Bk. S. Abut.	27+56.94	-22.60'	610.13	610.13
℄ Brg. S. Abut.	27+58.92	-22.77'	610.16	610.16
A	27+69.12	-23.64'	610.29	610.36
B	27+79.33	-24.40'	610.42	610.56
C	27+89.57	-25.06'	610.56	610.77
D	27+99.81	-25.62'	610.71	610.95
E	28+10.06	-26.08'	610.91	611.17
F	28+20.33	-26.43'	611.11	611.38
G	28+30.60	-26.68'	611.31	611.58
H	28+40.87	-26.83'	611.52	611.76
I	28+51.13	-26.88'	611.73	611.93
J	28+61.13	-26.88'	611.88	612.05
K	28+71.13	-26.88'	612.04	612.17
L	28+81.13	-26.88'	612.19	612.28
M	28+91.13	-26.88'	612.35	612.39
N	29+01.13	-26.88'	612.50	612.51
℄ Brg. Pier 1	29+09.55	-26.88'	612.62	612.62
O	29+19.55	-26.88'	612.79	612.79
P	29+29.55	-26.88'	612.94	612.95
Q	29+39.55	-26.88'	613.08	613.10
R	29+49.55	-26.88'	613.21	613.25
S	29+59.55	-26.88'	613.32	613.39
T	29+69.55	-26.88'	613.41	613.51
U	29+79.55	-26.88'	613.49	613.60
V	29+89.55	-26.88'	613.55	613.68
W	29+99.55	-26.88'	613.60	613.73
X	30+09.55	-26.88'	613.63	613.76
Y	30+19.55	-26.88'	613.65	613.75
Z	30+29.55	-26.88'	613.65	613.73
AA	30+39.55	-26.88'	613.64	613.68
℄ Brg. N. Abut.	30+48.21	-26.88'	613.62	613.62
Bk. N. Abut.	30+50.16	-26.88'	613.61	613.61

GIRDER 11

Location	Station	Offset	Theoretical Grade Elevations	Theoretical Grade Elevations Adjusted For Dead Load Deflection
Bk. S. Abut.	27+54.11	-28.61'	609.91	609.91
℄ Brg. S. Abut.	27+56.10	-28.80'	609.93	609.93
A	27+66.36	-29.69'	610.07	610.14
B	27+76.64	-30.48'	610.20	610.34
C	27+86.93	-31.16'	610.34	610.54
D	27+97.24	-31.75'	610.48	610.73
E	28+07.55	-32.23'	610.68	610.96
F	28+17.88	-32.61'	610.90	611.19
G	28+28.22	-32.88'	611.11	611.41
H	28+38.56	-33.06'	611.33	611.60
I	28+48.90	-33.12'	611.56	611.79
J	28+58.95	-33.13'	611.73	611.91
K	28+68.95	-33.13'	611.88	612.02
L	28+78.95	-33.13'	612.04	612.13
M	28+88.95	-33.13'	612.19	612.24
N	28+98.95	-33.13'	612.34	612.36
℄ Brg. Pier 1	29+07.37	-33.13'	612.47	612.47
O	29+17.37	-33.13'	612.63	612.63
P	29+27.37	-33.13'	612.78	612.79
Q	29+37.37	-33.13'	612.93	612.95
R	29+47.37	-33.13'	613.06	613.10
S	29+57.37	-33.13'	613.17	613.27
T	29+67.37	-33.13'	613.27	613.36
U	29+77.37	-33.13'	613.35	613.46
V	29+87.37	-33.13'	613.41	613.54
W	29+97.37	-33.13'	613.47	613.59
X	30+07.37	-33.13'	613.50	613.62
Y	30+17.37	-33.13'	613.52	613.62
Z	30+27.37	-33.13'	613.53	613.60
AA	30+37.37	-33.13'	613.52	613.55
℄ Brg. N. Abut.	30+46.04	-33.13'	613.50	613.50
Bk. N. Abut.	30+47.98	-33.13'	613.49	613.49

WEST EDGE SB. SHLDR

Location	Station	Offset	Theoretical Grade Elevations	Theoretical Grade Elevations Adjusted For Dead Load Deflection
Bk. S. Abut.	27+52.01	-33.00'	609.74	609.74
℄ Brg. S. Abut.	27+54.10	-33.00'	609.78	609.78
A	27+64.83	-33.00'	609.94	610.03
B	27+75.50	-33.00'	610.11	610.25
C	27+86.13	-33.00'	610.27	610.50
D	27+96.71	-33.00'	610.44	610.70
E	28+07.24	-33.00'	610.66	610.93
F	28+17.73	-33.00'	610.88	611.17
G	28+28.17	-33.00'	611.11	611.40
H	28+38.58	-33.00'	611.34	611.61
I	28+48.94	-33.00'	611.56	611.78
J	28+59.00	-33.00'	611.73	611.90
K	28+69.00	-33.00'	611.88	612.02
L	28+79.00	-33.00'	612.04	612.18
M	28+89.00	-33.00'	612.19	612.29
N	28+99.00	-33.00'	612.35	612.40
℄ Brg. Pier 1	29+07.41	-33.00'	612.48	612.48
O	29+17.41	-33.00'	612.63	612.65
P	29+27.41	-33.00'	612.79	612.83
Q	29+37.41	-33.00'	612.93	612.97
R	29+47.41	-33.00'	613.06	613.16
S	29+57.41	-33.00'	613.17	613.33
T	29+67.41	-33.00'	613.27	613.46
U	29+77.41	-33.00'	613.35	613.57
V	29+87.41	-33.00'	613.42	613.64
W	29+97.41	-33.00'	613.47	613.69
X	30+07.41	-33.00'	613.51	613.71
Y	30+17.41	-33.00'	613.53	613.69
Z	30+27.41	-33.00'	613.53	613.65
AA	30+37.41	-33.00'	613.52	613.58
℄ Brg. N. Abut.	30+46.08	-33.00'	613.50	613.50
Bk. N. Abut.	30+48.02	-33.00'	613.50	613.50

GIRDER 12

Location	Station	Offset	Theoretical Grade Elevations	Theoretical Grade Elevations Adjusted For Dead Load Deflection
Bk. S. Abut.	27+51.57	-33.93'	609.71	609.71
℄ Brg. S. Abut.	27+53.58	-34.10'	609.74	609.74
A	27+64.08	-34.61'	609.88	610.00
B	27+74.59	-35.02'	610.03	610.30
C	27+85.11	-35.33'	610.19	610.49
Header Girder	27+91.49	-35.46'	610.28	610.63

GIRDER 13

Location	Station	Offset	Theoretical Grade Elevations	Theoretical Grade Elevations Adjusted For Dead Load Deflection
Bk. S. Abut.	27+48.93	-39.39'	609.51	609.51
℄ Brg. S. Abut.	27+51.04	-39.39'	609.54	609.54
A	27+61.85	-39.39'	609.70	609.78
B	27+72.61	-39.38'	609.87	610.02
C	27+83.32	-39.38'	610.04	610.25
D	27+93.98	-39.38'	610.20	610.46
E	28+04.60	-39.38'	610.42	610.71
F	28+15.16	-39.38'	610.66	610.97
G	28+25.69	-39.38'	610.90	611.22
H	28+36.17	-39.38'	611.14	611.43
I	28+46.62	-39.38'	611.38	611.62
J	28+56.78	-39.38'	611.57	611.76
K	28+66.78	-39.38'	611.72	611.87
L	28+76.78	-39.38'	611.88	611.97
M	28+86.78	-39.38'	612.03	612.09
N	28+96.78	-39.38'	612.19	612.21
℄ Brg. Pier 1	29+05.19	-39.38'	612.32	612.32
O	29+15.19	-39.38'	612.47	612.48
P	29+25.19	-39.38'	612.63	612.63
Q	29+35.19	-39.38'	612.77	612.79
R	29+45.19	-39.38'	612.90	612.94
S	29+55.19	-39.38'	613.02	613.08
T	29+65.19	-39.38'	613.12	613.23
U	29+75.19	-39.38'	613.21	613.32
V	29+85.19	-39.38'	613.28	613.40
W	29+95.19	-39.38'	613.33	613.46
X	30+05.19	-39.38'	613.37	613.49
Y	30+15.19	-39.38'	613.40	613.50
Z	30+25.19	-39.38'	613.40	613.48
AA	30+35.19	-39.38'	613.40	613.44
℄ Brg. N. Abut.	30+43.86	-39.38'	613.38	613.38
Bk. N. Abut.	30+45.80	-39.38'	613.38	613.38

FACE OF SB. W. PARAPET

Location	Station	Offset	Theoretical Grade Elevations	Theoretical Grade Elevations Adjusted For Dead Load Deflection
Bk. S. Abut.	27+48.15	-41.00'	609.44	609.44
℄ Brg. S. Abut.	27+50.26	-41.00'	609.48	609.48
A	27+61.09	-41.00'	609.64	609.75
B	27+71.87	-41.00'	609.81	609.97
C	27+82.60	-41.00'	609.98	610.21
D	27+93.28	-41.00'	610.14	610.42
E	28+03.92	-41.00'	610.35	610.64
F	28+14.51	-41.00'	610.60	610.91
G	28+25.05	-41.00'	610.84	611.16
H	28+35.56	-41.00'	611.09	611.36
I	28+46.02	-41.00'	611.33	611.54
J	28+56.21	-41.00'	611.53	611.68
K	28+66.21	-41.00'	611.68	611.83
L	28+76.21	-41.00'	611.84	611.95
M	28+86.21	-41.00'	611.99	612.07
N	28+96.21	-41.00'	612.14	612.17
℄ Brg. Pier 1	29+04.63	-41.00'	612.27	612.27
O	29+14.63	-41.00'	612.43	612.43
P	29+24.63	-41.00'	612.58	612.60
Q	29+34.63	-41.00'	612.73	612.77
R	29+44.63	-41.00'	612.86	612.94
S	29+54.63	-41.00'	612.98	613.09
T	29+64.63	-41.00'	613.08	613.22
U	29+74.63	-41.00'	613.17	613.34
V	29+84.63	-41.00'	613.24	613.42
W	29+94.63	-41.00'	613.30	613.48
X	30+04.63	-41.00'	613.34	613.51
Y	30+14.63	-41.00'	613.36	613.50
Z	30+24.63	-41.00'	613.37	613.47
AA	30+34.63	-41.00'	613.37	613.42
℄ Brg. N. Abut.	30+43.29	-41.00'	613.35	613.35
Bk. N. Abut.	30+45.23	-41.00'	613.34	613.34

NOTES:

1.All Elevations and Offsets are in feet.
2. Offsets are measured with respect to ℄ Center Street. Negative offsets are left and positive are right of the centerline.

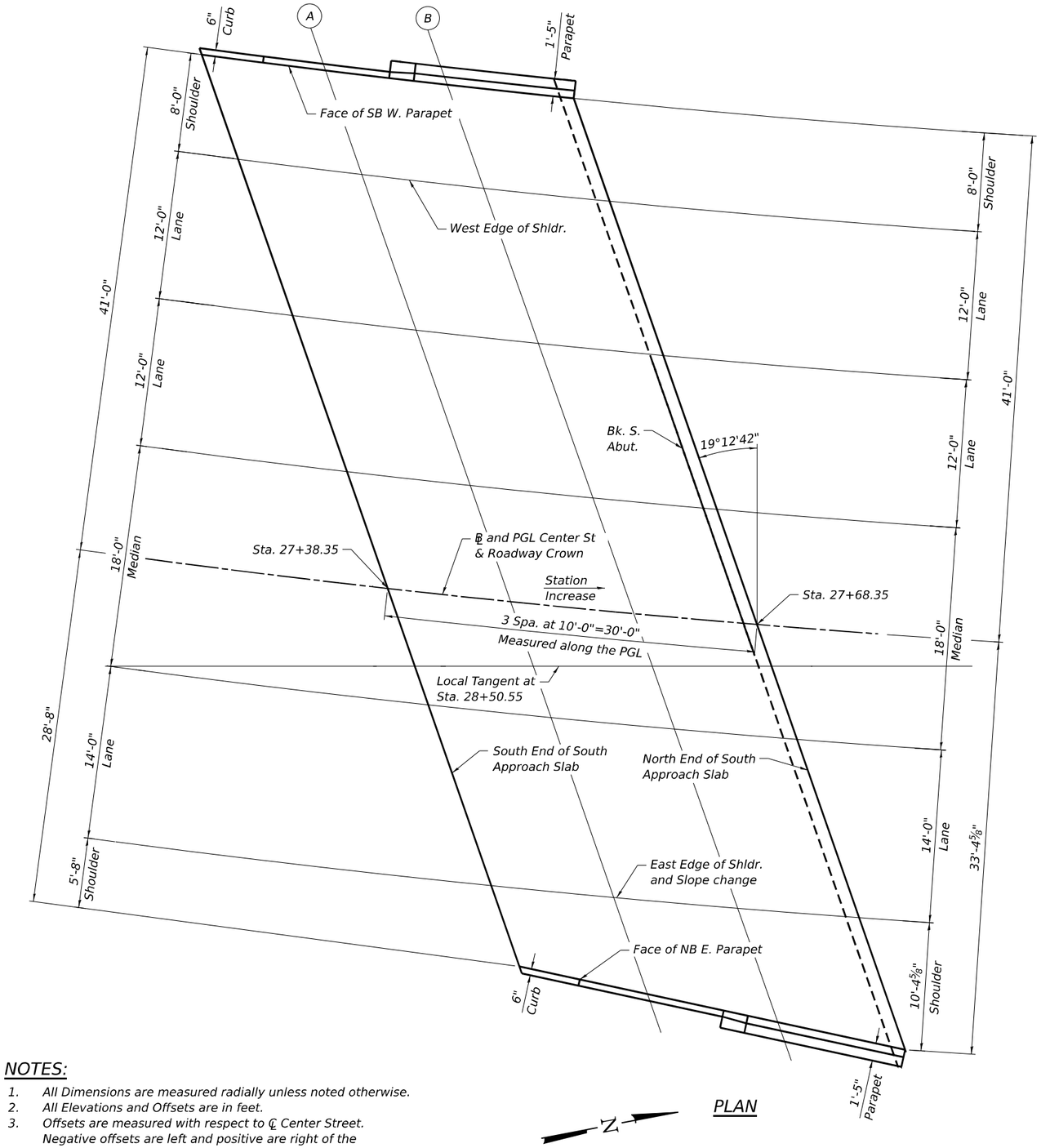

PLAN

FACE OF SB W. PARAPET

Location	Station	Offset	Theoretical Grade Elevations
S. End of South Approach Slab	27+17.72	-41.00'	608.97'
A	27+28.25	-41.00'	609.14'
B	27+38.58	-41.00'	609.30'
N. End of South Approach Slab	27+49.30	-41.00'	609.46'

WEST EDGE OF SHLDR.

Location	Bottom Elev	Offset	Theoretical Grade Elevations
S. End of South Approach Slab	27+21.90	-33.00'	609.28'
A	27+32.32	-33.00'	609.44'
B	27+42.58	-33.00'	609.60'
N. End of South Approach Slab	27+53.15	-33.00'	609.76'

℄ AND PGL CENTER ST & ROADWAY CROWN

Location	Station	Offset	Theoretical Grade Elevations
S. End of South Approach Slab	27+38.35	0.00'	610.52'
A	27+48.35	0.00'	610.68'
B	27+58.35	0.00'	610.83'
N. End of South Approach Slab	27+68.35	0.00'	610.99'

EAST EDGE OF SHLDR. & SLOPE CHANGE

Location	Station	Offset	Theoretical Grade Elevations
S. End of South Approach Slab	27+49.11	23.00'	611.38'
A	27+58.84	23.00'	611.53'
B	27+68.67	23.00'	611.68'
N. End of South Approach Slab	27+78.30	23.00'	611.83'

FACE OF NB E. PARAPET

Location	Station	Offset	Theoretical Grade Elevations
S. End of South Approach Slab	27+51.95	29.27'	611.30'
A	27+62.16	30.53'	611.43'
B	27+72.54	31.92'	611.56'
N. End of South Approach Slab	27+82.63	33.38'	611.69'

NOTES:

1. All Dimensions are measured radially unless noted otherwise.
2. All Elevations and Offsets are in feet.
3. Offsets are measured with respect to ℄ Center Street. Negative offsets are left and positive are right of the centerline.

MODEL: Default
FILE NAME: pw://transystems-pw.bentley.com:transyscorp-pw1-hosted/Documents/Projects_2018/CH401/401180022/03-WSP/CAD/62R22-INT-4 (Center)/Sheets/Structural/SN-099-8332/0998332-62R22-SB-09-Top South Approach Slab Layout

4/22/2025 4:03:44 PM

HBM ENGINEERING GROUP, LLC

USER NAME =	DESIGNED - ANS	REVISED -
	CHECKED - LAB	REVISED -
PLOT SCALE =	DRAWN - ANS	REVISED -
PLOT DATE =	CHECKED - LAB	REVISED -

STATE OF ILLINOIS
DEPARTMENT OF TRANSPORTATION

TOP OF SOUTH APPROACH SLAB ELEVATIONS
STRUCTURE NO. 099-8332

SHEET SB-09 OF SB-48 SHEETS

F.A.I. RTE.	SECTION	COUNTY	TOTAL SHEETS	SHEET NO.
80	FAI 80 21 INTERCHANGE	WILL	1209	664

CONTRACT NO. 62R22

ILLINOIS | FED. AID PROJECT

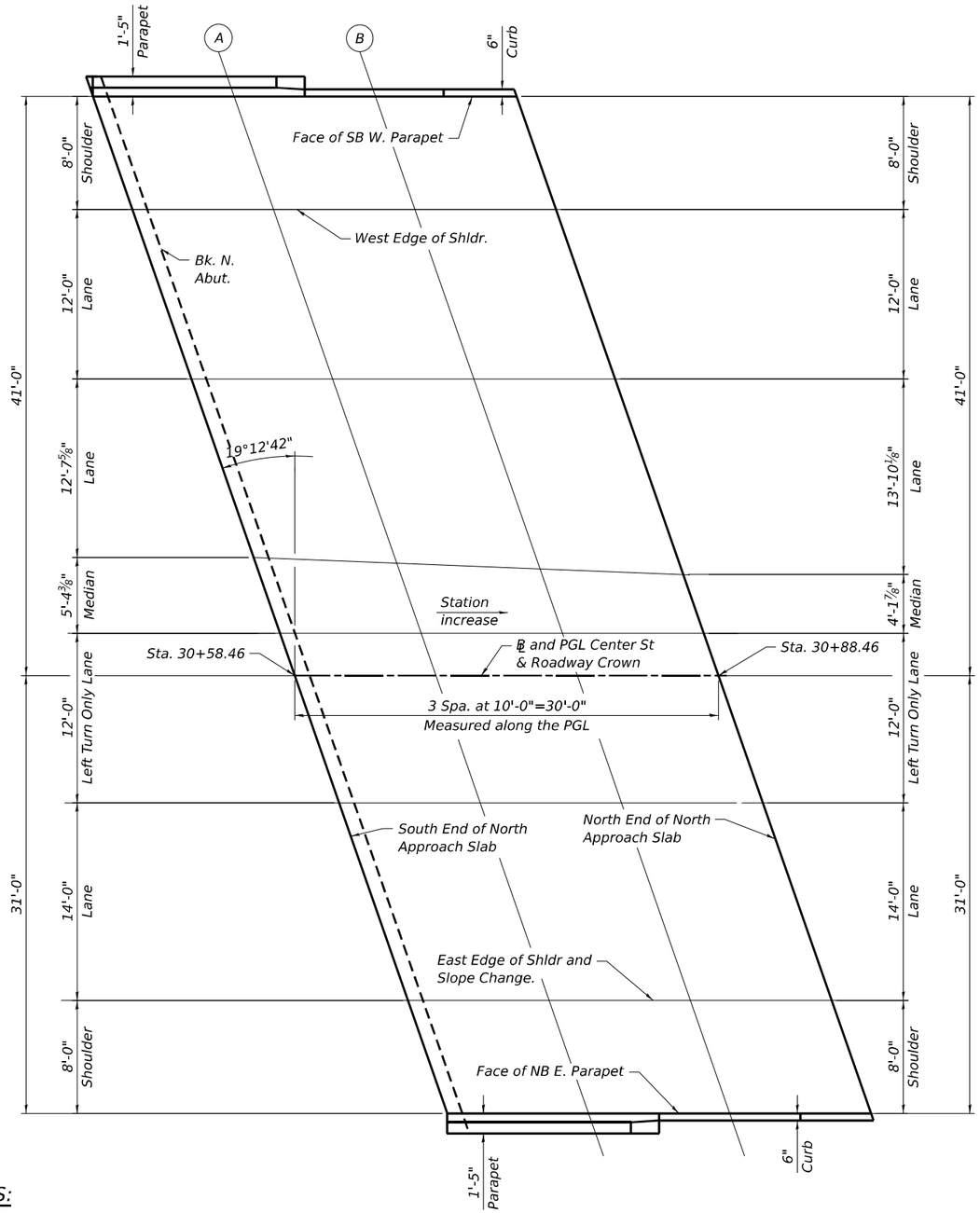

PLAN

NOTES:

1. All Dimensions are measured radially unless noted otherwise.
2. All Elevations and Offsets are in feet.
3. Offsets are measured with respect to ℄ Center Street. Negative offsets are left and positive are right of the centerline.

FACE OF SB W. PARAPET

Location	Station	Offset	Theoretical Grade Elevations
S. End of North Approach Slab	30+44.17	-41.00'	613.35'
A	30+54.17	-41.00'	613.31'
B	30+64.17	-41.00'	613.26'
N. End of North Approach Slab	30+74.17	-41.00'	613.20'

WEST EDGE OF SHLDR.

Location	Station	Offset	Theoretical Grade Elevations
S. End of North Approach Slab	30+46.96	-33.00'	613.50'
A	30+56.96	-33.00'	613.46'
B	30+66.96	-33.00'	613.41'
N. End of North Approach Slab	30+76.96	-33.00'	613.34'

℄ B AND PGL CENTER ST & ROADWAY COWN

Location	Station	Offset	Theoretical Grade Elevations
S. End of North Approach Slab	30+58.46	0.00'	614.11'
A	30+68.46	0.00'	614.06'
B	30+78.46	0.00'	613.98'
N. End of North Approach Slab	30+88.46	0.00'	613.91'

EAST EDGE OF SHLDR. & SLOPE CHANGE

Location	Station	Offset	Theoretical Grade Elevations
S. End of North Approach Slab	30+66.48	23.00'	613.61'
A	30+76.48	23.00'	613.54'
B	30+86.48	23.00'	613.46'
N. End of North Approach Slab	30+96.48	23.00'	613.39'

FACE OF NB E. PARAPET

Location	Station	Offset	Theoretical Grade Elevations
S. End of North Approach Slab	30+69.26	31.00'	613.43'
A	30+79.26	31.00'	613.36'
B	30+89.26	31.00'	613.28'
N. End of North Approach Slab	30+99.26	31.00'	613.21'

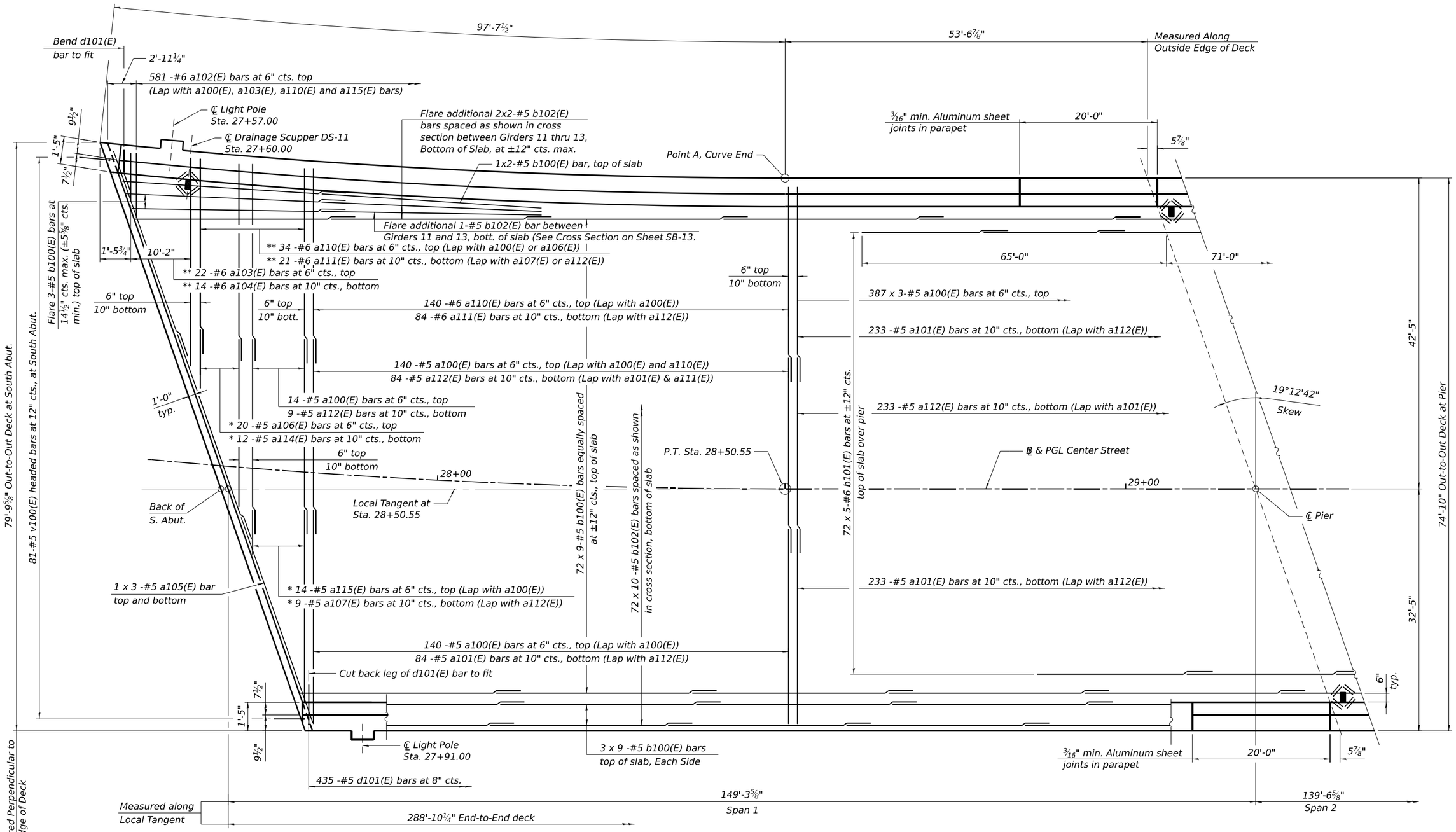

DECK PARTIAL PLAN

N

MINIMUM BAR LAP

#5 Bar = 3'-6"
#6 Bar = 4'-5"

* See Field Cutting Diagram on Sheet SB-17 of SB-48.
** Cut in field to fit

NOTES:

1. See Sheet SB-17 of SB-48 for superstructure details and Bill of Material.
2. For Deck Cross Sections, see Sheets SB-13 and SB-14 of SB-48.
3. Bars indicated thus 78 x 11-#5 etc. indicates 78 lines of bars with 11 lengths per line.
4. For light pole bumpout details, see Sheet SB-16 of SB-48.
5. Light pole stations measured to centerline of light pole base.
6. Drainage scupper stations measured to center of grate at inside face of parapet.

HBM ENGINEERING GROUP, LLC

USER NAME =	DESIGNED - PG	REVISED -	
	CHECKED - MI, JJS	REVISED -	
PLOT SCALE =	DRAWN - PG	REVISED -	
PLOT DATE =	CHECKED - MI, JJS	REVISED -	

STATE OF ILLINOIS
DEPARTMENT OF TRANSPORTATION

SUPERSTRUCTURE PLAN (SHEET 1 OF 2)
STRUCTURE NO. 099-8332

SHEET SB-11 OF SB-48 SHEETS

F.A.I. RTE.	SECTION	COUNTY	TOTAL SHEETS	SHEET NO.
80	FAI 80 21 INTERCHANGE	WILL	1209	666
		CONTRACT NO. 62R22		
	ILLINOIS	FED. AID PROJECT		

MODEL: Default
FILE NAME: pw://transystems-pw.bentley.com:transyscorp-pw1-hosted/Documents/Projects_2018/CH401/401180022/03-WSP/CAD/62R22-INT-4 (Center)/Sheets/Structural/SN-099-8332/0998332-62R22-SB-11-Deck Plan 1
4/22/2025 4:03:53 PM

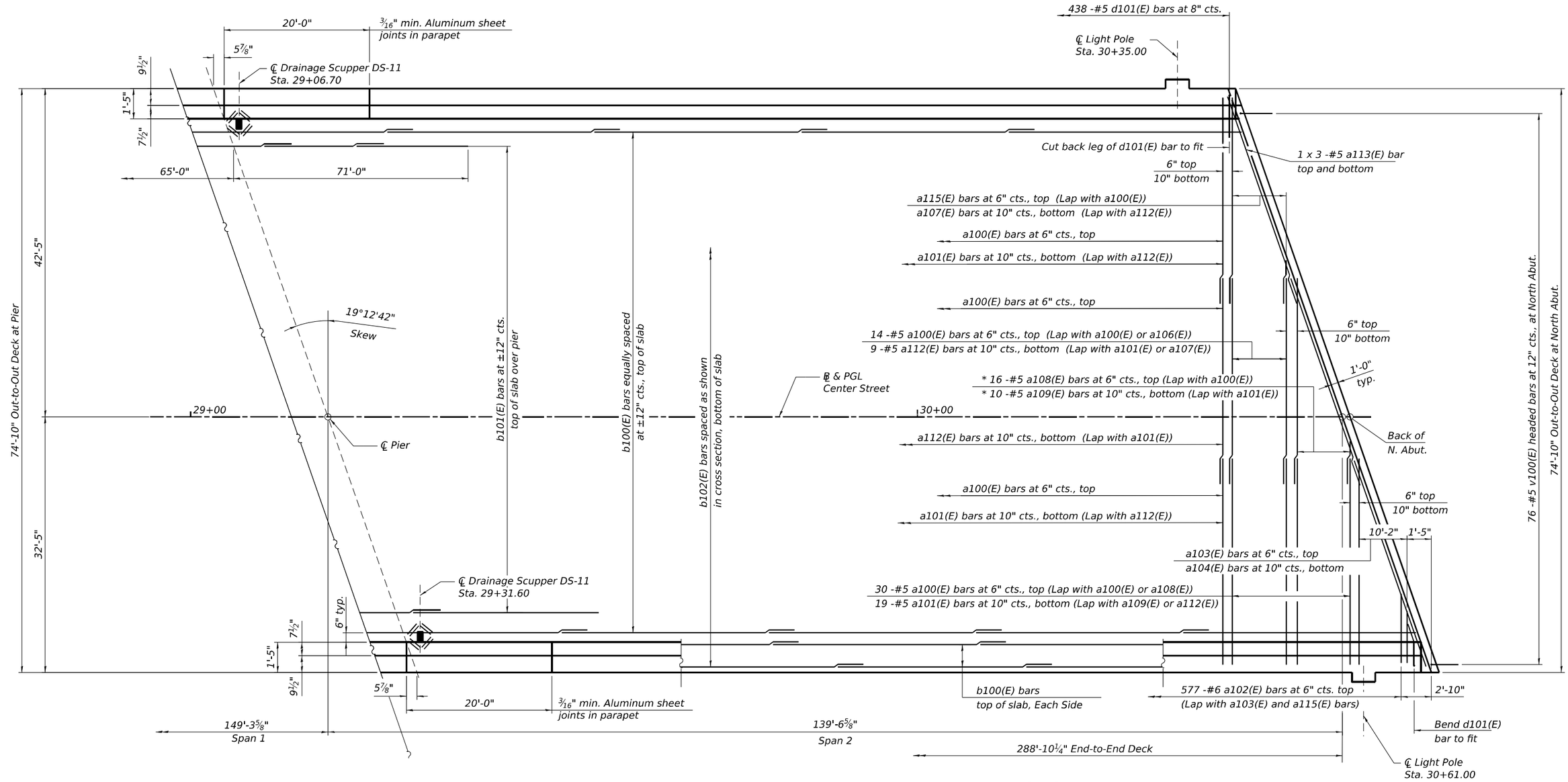

MINIMUM BAR LAP

#5 Bar = 3'-6"
#6 Bar = 4'-5"

* See Field Cutting Diagram on Sheet SB-17 of SB-48.

DECK PARTIAL PLAN

N

NOTES:

1. See Sheet SB-17 of SB-48 for superstructure details and Bill of Material.
2. For Deck Cross Sections, see Sheets SB-13 and SB-14 of SB-48.
3. Bars indicated thus 78 x 11-#5 etc. indicates 78 lines of bars with 11 lengths per line.
4. For light pole bumpout details, see Sheet SB-16 of SB-48.
5. Light pole stations measured to centerline of light pole base.
6. Drainage scupper stations measured to center of grate at inside face of parapet.

MODEL: Default
FILE NAME: pw://transystems-pw.bentley.com:transyscorp-pw1-hosted/Documents/Projects_2018/CH401/401180022/03-WSP/CAD/62R22-INT-4 (Center)/Sheets/Structural/SN-099-8332/0998332-62R22-SB-12-Deck Plan 2
4/22/2025 4:03:56 PM

HBM ENGINEERING GROUP, LLC

USER NAME =	DESIGNED - PG	REVISED -	
	CHECKED - MI, JJS	REVISED -	
PLOT SCALE =	DRAWN - PG	REVISED -	
PLOT DATE =	CHECKED - MI, JJS	REVISED -	

STATE OF ILLINOIS
DEPARTMENT OF TRANSPORTATION

SUPERSTRUCTURE PLAN (SHEET 2 OF 2)
STRUCTURE NO. 099-8332

SHEET SB-12 OF SB-48 SHEETS

F.A.I. RTE.	SECTION	COUNTY	TOTAL SHEETS	SHEET NO.
80	FAI 80 21 INTERCHANGE	WILL	1209	667
		CONTRACT NO. 62R22		
	ILLINOIS	FED. AID PROJECT		

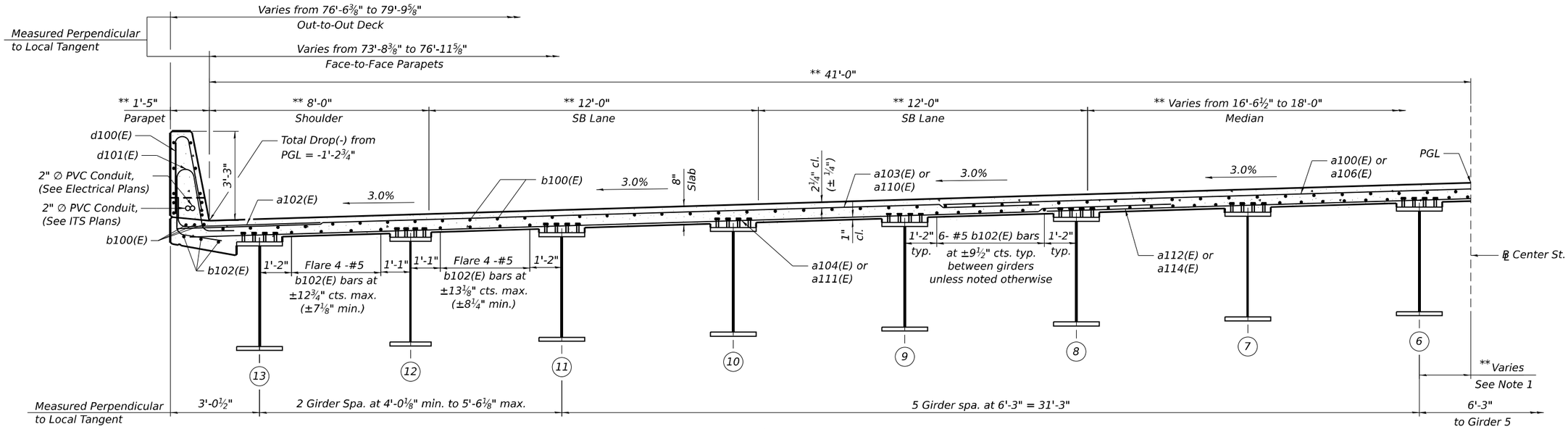

NEAR SOUTH ABUT.

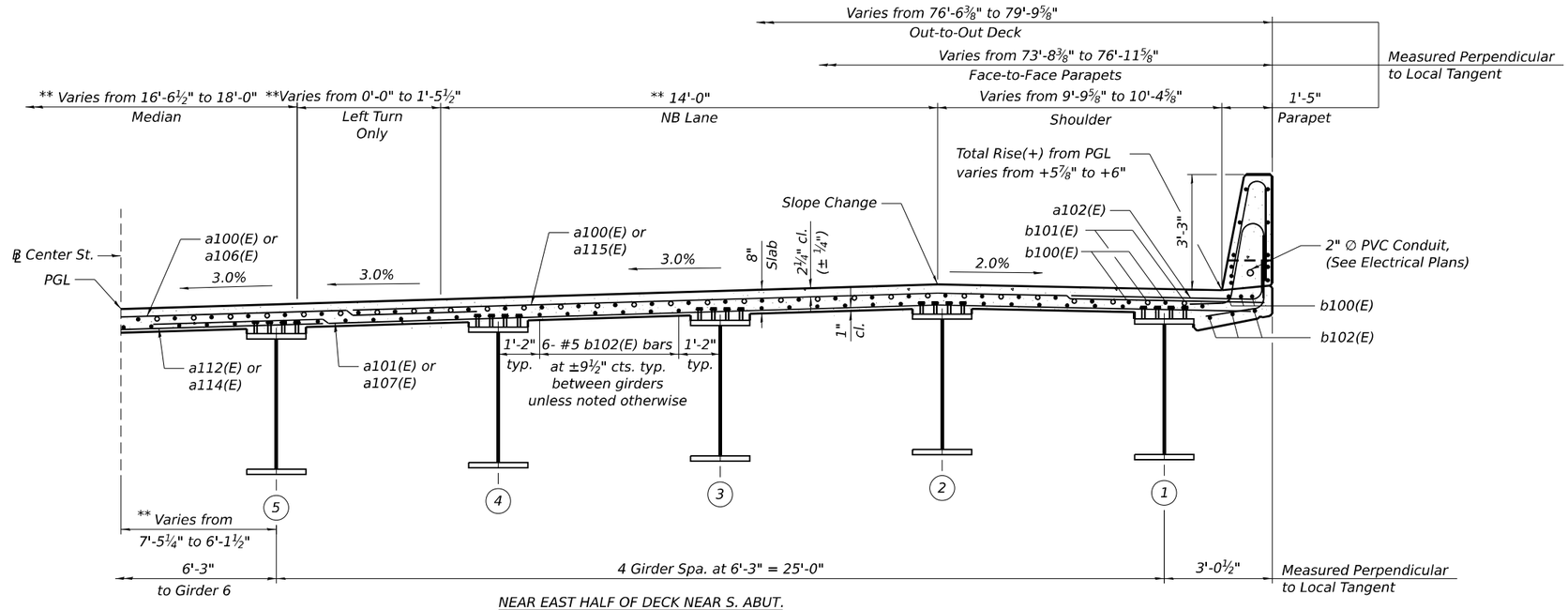

NEAR EAST HALF OF DECK NEAR S. ABUT.

NOTE:

1. Girder 6 is offset 1'-5" to the left of the ℄ Center St. at its maximum and transitions to 1⅝" to the right of the ℄ Center St. (Measured Radially to ℄ Center St.)

CROSS SECTION

(Looking North)

(Sta. 27+68.34 to Sta. 27+91.49)

* For Deck Cross Slopes, See Method of Attaining Superelevation on Sheet SB-03.

** Measured Radially to ℄ Center Street.

HBM ENGINEERING GROUP, LLC	USER NAME =	DESIGNED - PG	REVISED -
		CHECKED - MI, JJS	REVISED -
	PLOT SCALE =	DRAWN - PG	REVISED -
	PLOT DATE =	CHECKED - MI, JJS	REVISED -

STATE OF ILLINOIS
DEPARTMENT OF TRANSPORTATION

SUPERSTRUCTURE CROSS SECTION (SHEET 1 OF 2)
STRUCTURE NO. 099-8332

SHEET SB-13 OF SB-48 SHEETS

F.A.I. RTE.	SECTION	COUNTY	TOTAL SHEETS	SHEET NO.
80	FAI 80 21 INTERCHANGE	WILL	1209	668

CONTRACT NO. 62R22

ILLINOIS FED. AID PROJECT

MODEL: Default
FILE NAME: pw://transystems-pw.bentley.com:transyscorp-pw1-hosted/Documents/Projects_2018/CH401/401180022/03-WSP/CAD/62R22-INT-4 (Center)/Sheets/Structural/SN-099-8332/0998332-62R22-SB-13-Deck XS 1

4/22/2025 4:03:58 PM

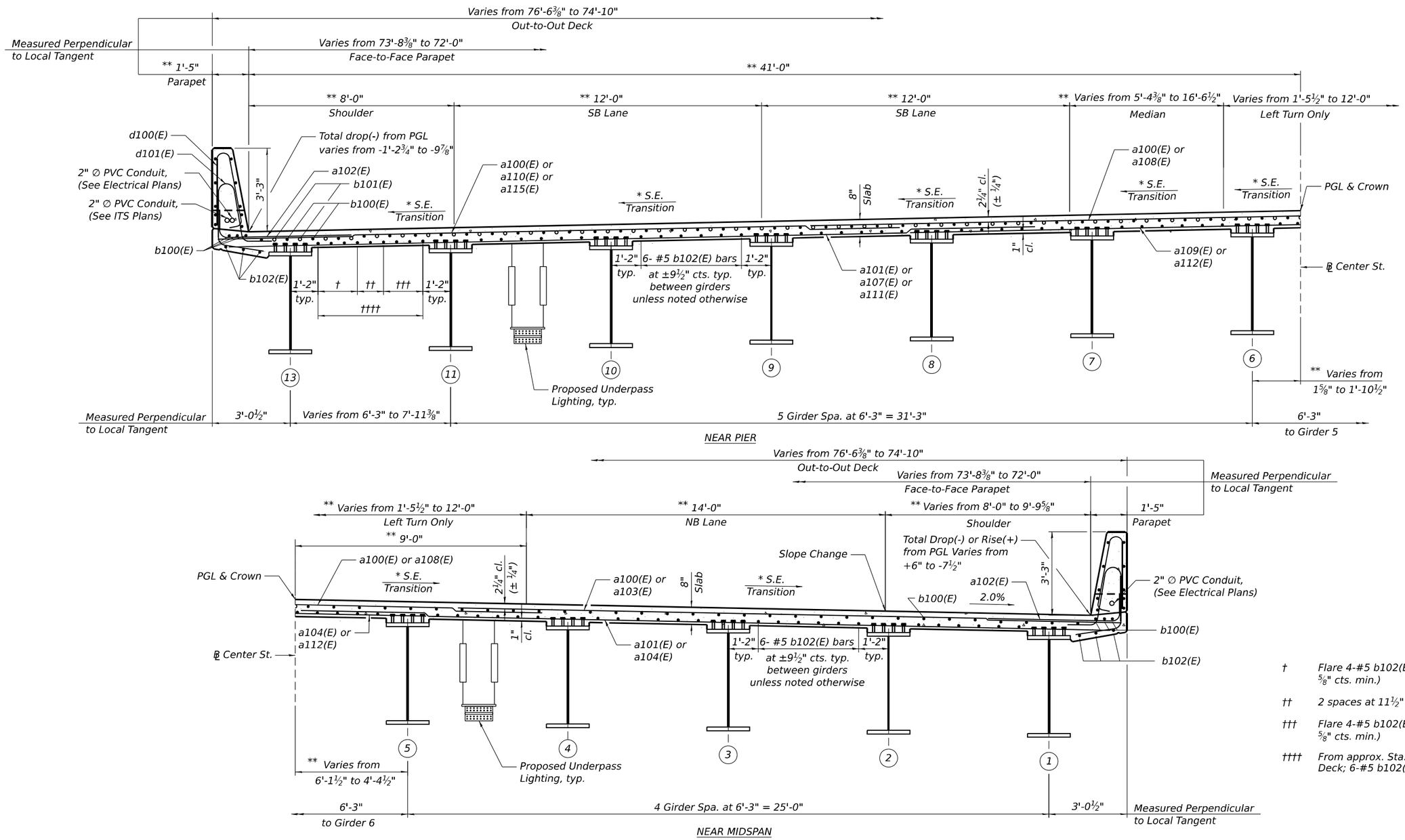

† Flare 4-#5 b102(E) bars at ±7⅛" cts. max. (6⅝" cts. min.)

†† 2 spaces at 11½" cts. max. (6⅝" cts. min.)

††† Flare 4-#5 b102(E) bars at ±8¼" cts. max. (6⅝" cts. min.)

†††† From approx. Sta. 28+14.47 to North End of Deck; 6-#5 b102(E) bars at ±9½" cts.

CROSS SECTION

(Looking North)

(Sta. 27+91.49 to Sta. 30+58.46)

* For Deck Cross Slopes, See Method of Attaining Superelevation on Sheet SB-03.

** Measured Radially or at Right angles to ℄ Center Street.

MODEL: Default
FILE NAME: pw://transystem-pw.bentley.com:transyscorp-pw1-hosted/Documents/Projects_2018/CH401/401180022/03-WSP/CAD/62R22-INT-4 (Center)/Sheets/Structural/SN-099-8332/0998332-62R22-SB-14-Deck XS 2

4/22/2025 4:04:00 PM

HBM ENGINEERING GROUP, LLC

USER NAME =	DESIGNED - PG	REVISED -	
	CHECKED - MI, JJS	REVISED -	
PLOT SCALE =	DRAWN - PG	REVISED -	
PLOT DATE =	CHECKED - MI, JJS	REVISED -	

STATE OF ILLINOIS
DEPARTMENT OF TRANSPORTATION

SUPERSTRUCTURE CROSS SECTION (SHEET 2 OF 2)
STRUCTURE NO. 099-8332

SHEET SB-14 OF SB-48 SHEETS

F.A.I. RTE.	SECTION	COUNTY	TOTAL SHEETS	SHEET NO.
80	FAI 80 21 INTERCHANGE	WILL	1209	669
		CONTRACT NO. 62R22		
	ILLINOIS	FED. AID PROJECT		

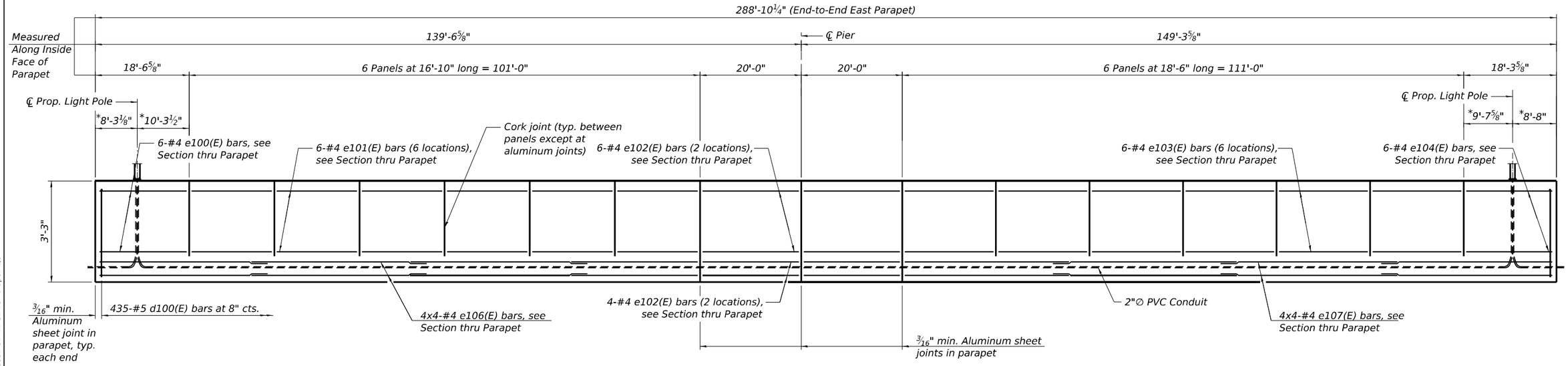

INSIDE ELEVATION OF EAST PARAPET

(Looking East)

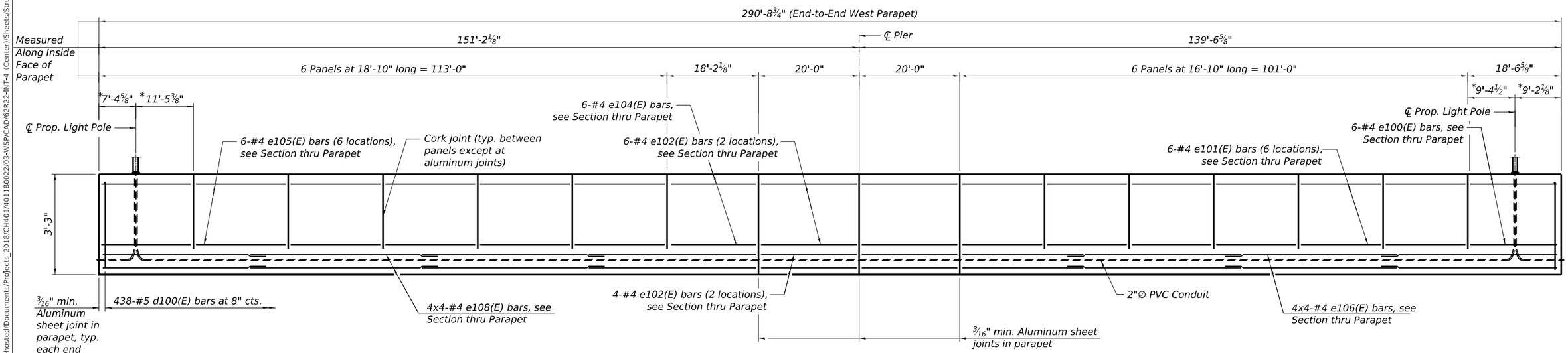

INSIDE ELEVATION OF WEST PARAPET

(Looking West)

* Measured Along Inside Face of Parapet

MINIMUM BAR LAP

#4 Bar = 2'-5"

NOTES:

1. For Notes, Sections thru Parapet, parapet joint details, bar diagrams and Bill of Material, see Sheet SB-17 of SB-48.
2. For light pole bumpout details, see Sheet SB-16 of SB-48.

HBM ENGINEERING GROUP, LLC

USER NAME =	DESIGNED - PG	REVISED -	
	CHECKED - MI, JJS	REVISED -	
PLOT SCALE =	DRAWN - PG	REVISED -	
PLOT DATE =	CHECKED - MI, JJS	REVISED -	

STATE OF ILLINOIS
DEPARTMENT OF TRANSPORTATION

PARAPET ELEVATIONS
STRUCTURE NO. 099-8332

SHEET SB-15 OF SB-48 SHEETS

F.A.I. RTE.	SECTION	COUNTY	TOTAL SHEETS	SHEET NO.
80	FAI 80 21 INTERCHANGE	WILL	1209	670
		CONTRACT NO. 62R22		
	ILLINOIS	FED. AID PROJECT		

MODEL: Default
FILE NAME: pw://transystems-pw.bentley.com:transyscorp-pw1-hosted/Documents/Projects_2018/CH401/401180022/03-WSP/CAD/62R22-INT-4 (Center)/Sheets/Structural/SN-099-8332/0998332-62R22-SB-15-Parapet Elev
4/22/2025 4:04:02 PM

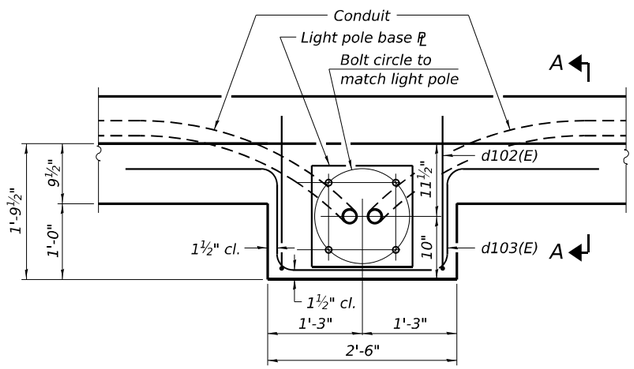

PLAN

Note:
Cost of anchor rods is included with Concrete Superstructure.

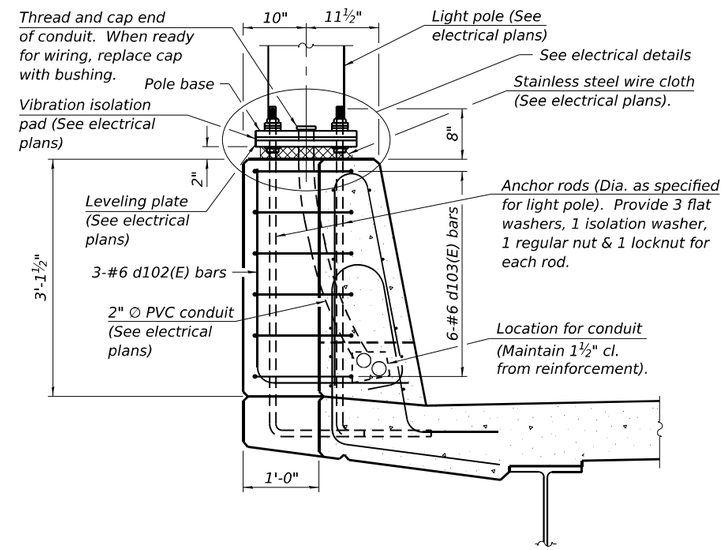

SECTION A-A

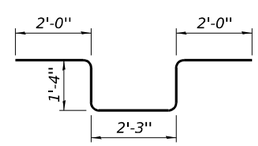

BAR d103(E)

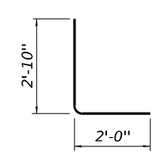

BAR d102(E)

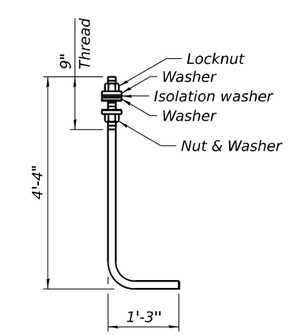

ANCHOR ROD

Diameter as specified for light poles. (ASTM F 1554 Grade 105) Full length hot dipped galvanized.

MODEL: Default
FILE NAME: pw://transystem-pw.bentley.com:transyscorp-pw1-hosted/Documents/Projects_2018/CH401/401180022/03-WSP/CAD/62R22-INT-4 (Center)/Sheets/Structural/SN-099-8332/0998332-62R22-SB-16-Light Pole Details

HBM ENGINEERING GROUP, LLC	USER NAME =	DESIGNED - PG	REVISED -
		CHECKED - MI, JJS	REVISED -
	PLOT SCALE =	DRAWN - PG	REVISED -
	PLOT DATE =	CHECKED - MI, JJS	REVISED -

STATE OF ILLINOIS
DEPARTMENT OF TRANSPORTATION

LIGHT POLE BUMPOUT DETAILS
STRUCTURE NO. 099-8332

SHEET SB-16 OF SB-48 SHEETS

F.A.I. RTE.	SECTION	COUNTY	TOTAL SHEETS	SHEET NO.
80	FAI 80 21 INTERCHANGE	WILL	1209	671
		CONTRACT NO. 62R22		
	ILLINOIS	FED. AID PROJECT		

4/22/2025 4:04:03 PM

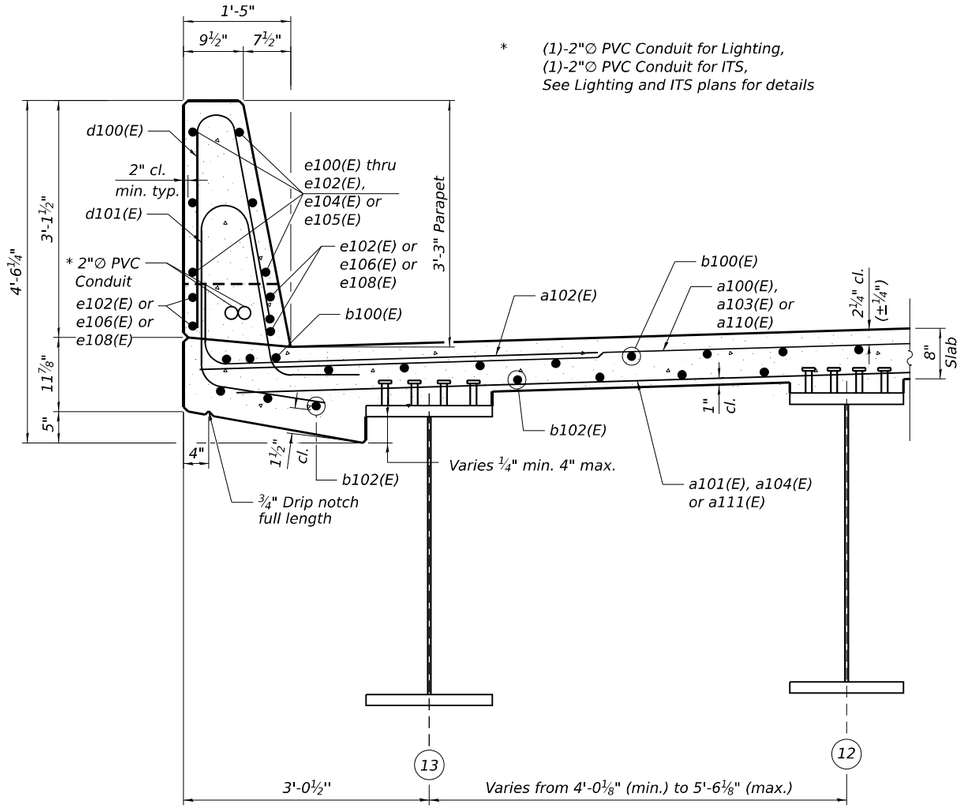

* (1)-2"∅ PVC Conduit for Lighting,
(1)-2"∅ PVC Conduit for ITS,
See Lighting and ITS plans for details

NEAR MIDSPAN

SECTION THRU WEST PARAPET

(Sta. 27+68.34 to 27+91.49)

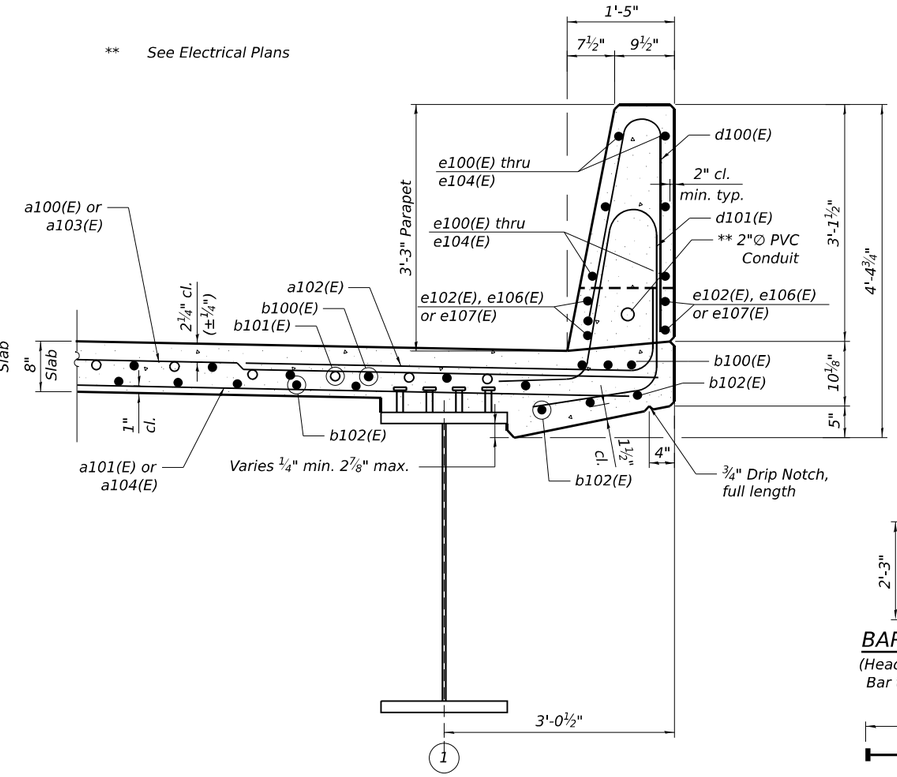

NEAR PIER

SECTION THRU EAST PARAPET

(typical)

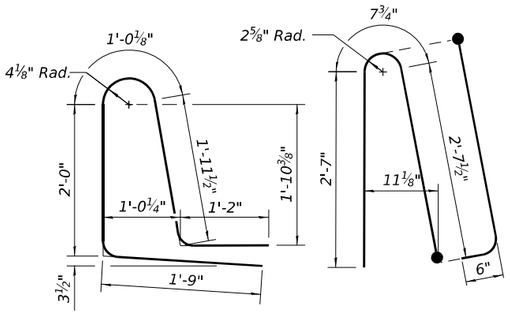

BAR d101(E)

BAR d100(E)

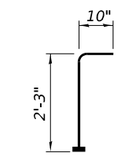

BAR v100(E)

(Headed. 157 - #5
Bar terminators)

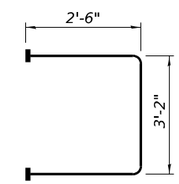

BAR s100(E)

(Headed 296 - #5
Bar terminators)

SUPERSTRUCTURE BILL OF MATERIAL

Bar	No.	Size	Length	Shape
a100(E)	1499	#5	27'-2"	
a101(E)	569	#5	23'-0"	
a102(E)	1158	#6	8'-4"	
a103(E)	22	#6	36'-11"	
a104(E)	14	#6	36'-1"	
a105(E)	6	#5	30'-5"	
a106(E)	10	#5	36'-6"	
a107(E)	9	#5	29'-3"	
a108(E)	8	#5	41'-4"	
a109(E)	5	#5	49'-4"	
a110(E)	174	#6	32'-0"	
a111(E)	105	#6	27'-9"	
a112(E)	335	#5	34'-9"	
a113(E)	6	#5	28'-8"	
a114(E)	6	#5	45'-1"	
a115(E)	14	#5	35'-11"	
a116(E)	24	#5	1'-6"	
b100(E)	707	#5	35'-2"	
b101(E)	360	#6	30'-9"	
b102(E)	725	#5	32'-0"	
d100(E)	893	#5	6'-5"	
d101(E)	873	#5	7'-11"	
d102(E)	12	#6	4'-10"	
d103(E)	24	#6	8'-11"	
e100(E)	12	#4	18'-2"	
e101(E)	72	#4	16'-6"	
e102(E)	40	#4	19'-8"	
e103(E)	36	#4	18'-2"	
e104(E)	12	#4	17'-10"	
e105(E)	36	#4	18'-6"	
e106(E)	32	#4	27'-0"	
e107(E)	16	#4	29'-6"	
e108(E)	16	#4	30'-0"	
m100(E)	15	#6	29'-3"	
m101(E)	84	#6	6'-2"	
m102(E)	16	#6	2'-8"	
m103(E)	15	#6	31'-0"	
m104(E)	8	#6	5'-3"	
s100(E)	148	#5	8'-2"	
s101(E)	148	#5	12'-4"	
v100(E)	157	#5	3'-1"	
Concrete Superstructure			Cu Yd	774.8
Bridge Deck Grooving			Sq Yd	2,273
Protective Coat			Sq Yd	2,619
Reinforcement Bars, Epoxy Coated			Pound	189,940

Bars indicated thus 1 x 2-#4 etc. indicates
1 line of bars with 2 lengths per line.

NOTES:

1. Exterior surfaces of downspouts and exterior exposed surfaces of the scupper frame below deck shall be pigmented or painted to match the color of the adjacent beam.
2. The 3/16" min. aluminum sheet shall be ASTM B 209 alloy 3003-H14 and coated with either 5 mils of bitumen paint or epoxy paint to minimize reaction with wet concrete. Cost included with Concrete Superstructure.
3. The polyurethane sealant shall be according to Article 1050.04 of the Std. Spec. and the color shall be gray.
4. Bar terminators paid for separately. See Total Bill of Material.
5. Protective Coat shall be applied to the top and inside faces of parapets and the top of deck.

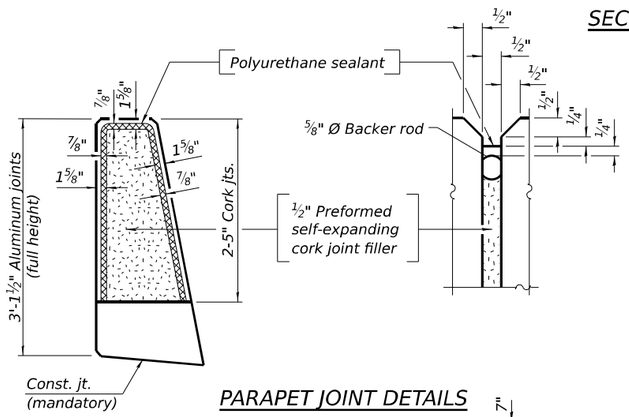

PARAPET JOINT DETAILS

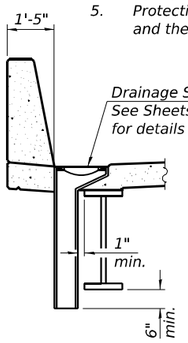

SECTION A-A

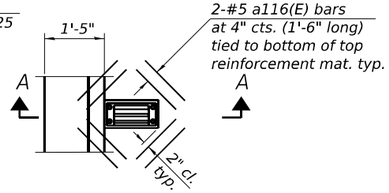

PLAN

Note:
Cut longitudinal reinforcement to clear drainage scuppers.

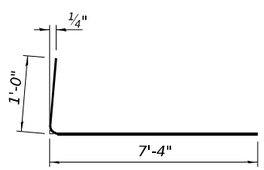

BAR a102(E)

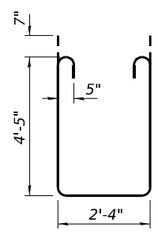

BAR s101(E)

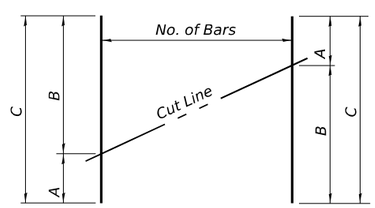

FIELD CUTTING DIAGRAM

Order a103(E), a104(E), a106(E) thru a109(E), a114(E) and a115(E) bars full length. Cut as shown and use remainder of bars in opposite direction or opposite side as appropriate.

Location	Bars	A	B	C
Top of Slab	22 -#5 a103(E) bars	3'-5"	32'-7"	36'-0"
Bottom of Slab	14 -#5 a104(E) bars	3'-0"	32'-2"	35'-2"
Top of Slab	10 -#5 a106(E) bars	5'-7"	30'-11"	36'-6"
Bottom of Slab	9 -#5 a107(E) bars	5'-11"	23'-4"	29'-3"
Top of Slab	8 -#5 a108(E) bars	10'-4"	31'-0"	41'-4"
Bottom of Slab	5 -#5 a109(E) bars	15'-0"	34'-9"	49'-9"
Top of Slab	14 -#5 a115(E) bars	8'-9"	27'-2"	35'-11"
Bottom of Slab	6 -#5 a114(E) bars	10'-4"	34'-4"	45'-1"

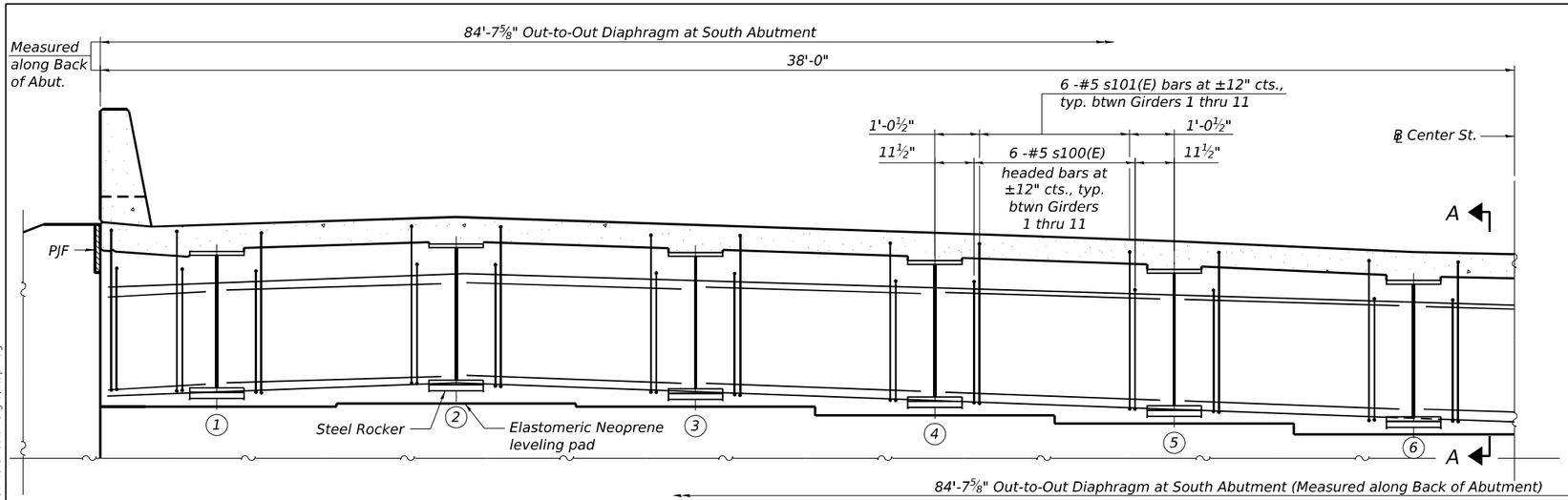

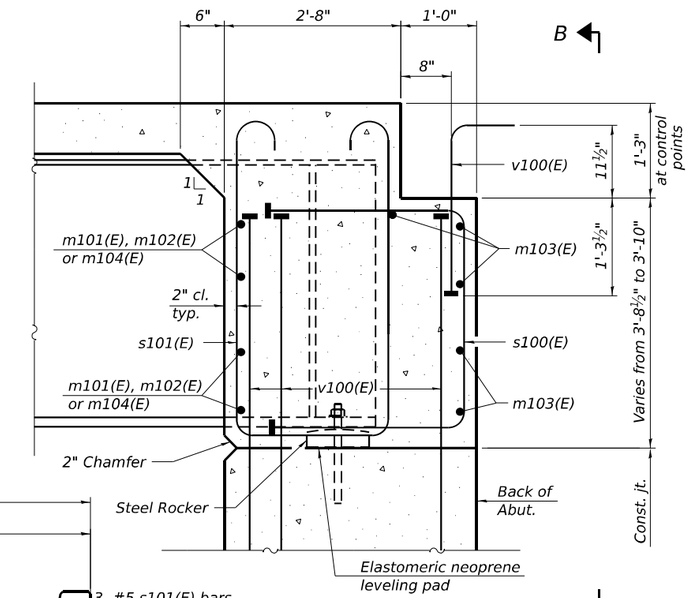

SECTION A-A
(At Right Angles)

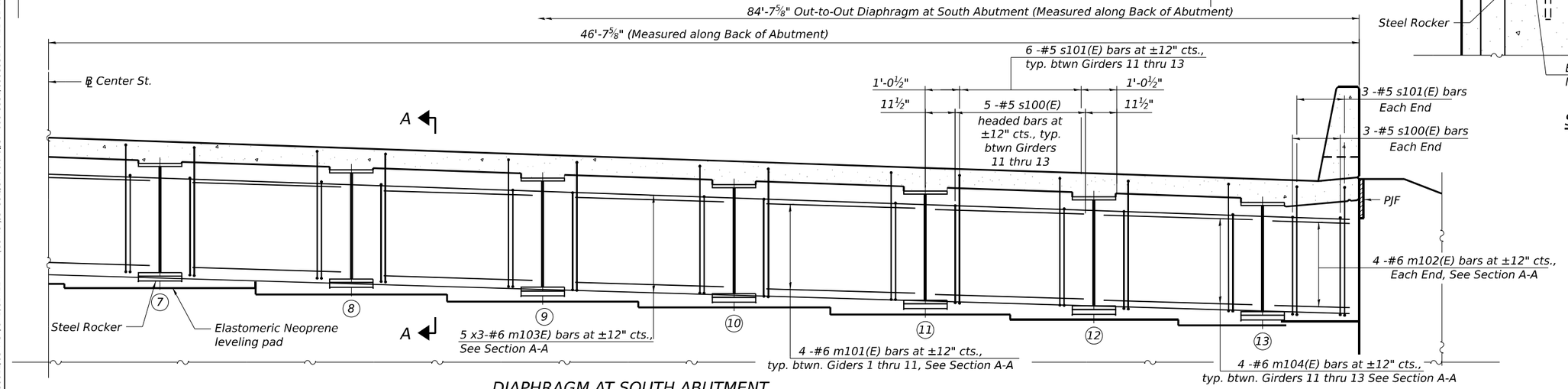

DIAPHRAGM AT SOUTH ABUTMENT

MINIMUM BAR LAP
#6 Bar = 4'-4"

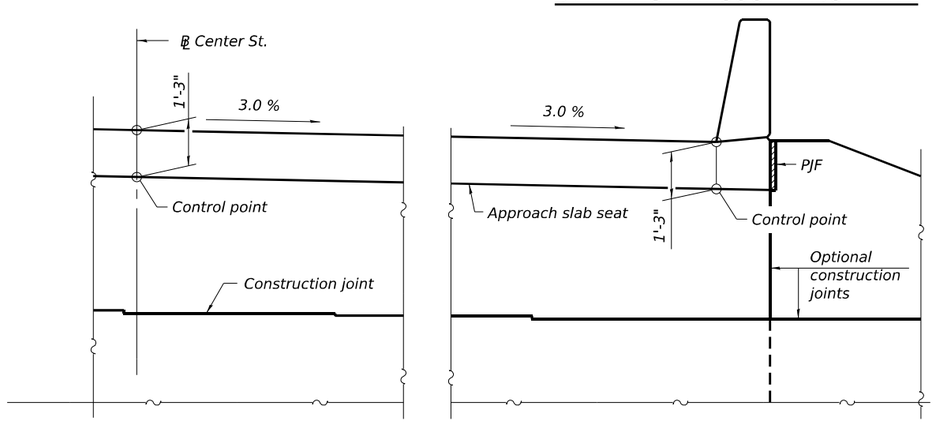

VIEW B-B

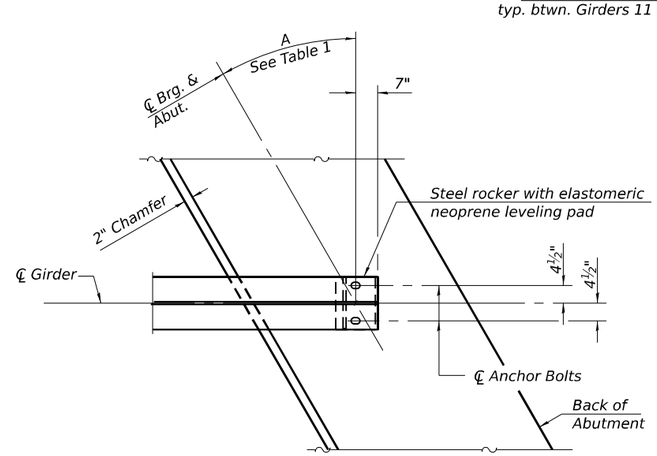

PLAN AT SOUTH ABUTMENT
(Showing bottom flange of beam)

TABLE 1

Girder	A
1 thru 11	19°12'42''
12	21°33'05"
13	24°55'54"

NOTES:

1. See Sheet SB-17 of SB-48 for superstructure details and Bill of Material.
2. See sheet SB-21 of SB-48 for PJF details.
3. The s100(E) and s101(E) bars shall be placed parallel to the girders. Spacing for these bars shall be at right angles to the girders.
4. The approach slab seat shall have a constant slope determined from the control points shown.

MODEL: Default
FILE NAME: pw://transystems-pw.bentley.com:transyscorp-pw1-hosted/Documents/Projects_2018/CH401/401180022/03-WSP/CAD/62R22-INT-4 (Center)/Sheets/Structural/SN-099-8332/0998332-62R22-SB-19-SAbutIntergralDiaphragm
4/22/2025 4:04:10 PM

HBM ENGINEERING GROUP, LLC

USER NAME =	DESIGNED - PG	REVISED -	
	CHECKED - MI, JJS	REVISED -	
PLOT SCALE =	DRAWN - PG	REVISED -	
PLOT DATE =	CHECKED - MI, JJS	REVISED -	

STATE OF ILLINOIS
DEPARTMENT OF TRANSPORTATION

SOUTH ABUTMENT DIAPHRAGM ELEVATION AND DETAILS
STRUCTURE NO. 099-8332

SHEET SB-18 OF SB-48 SHEETS

F.A.I. RTE.	SECTION	COUNTY	TOTAL SHEETS	SHEET NO.
80	FAI 80 21 INTERCHANGE	WILL	1209	673
		CONTRACT NO. 62R22		
	ILLINOIS	FED. AID PROJECT		

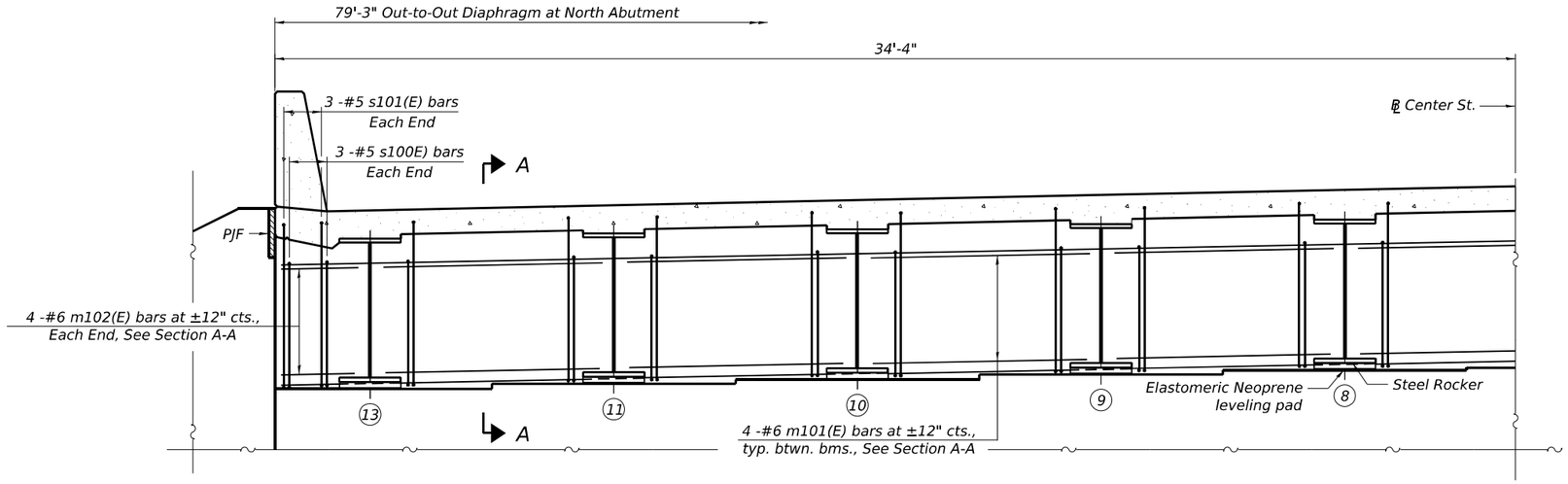

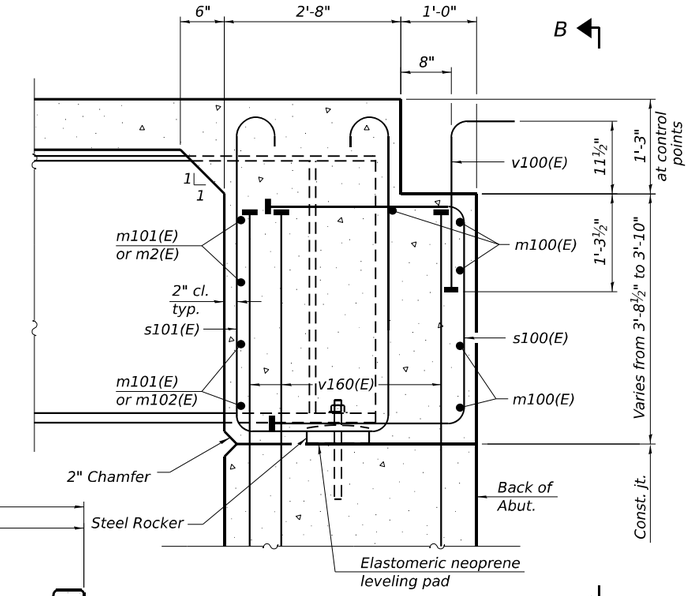

SECTION A-A

(At Right Angles)

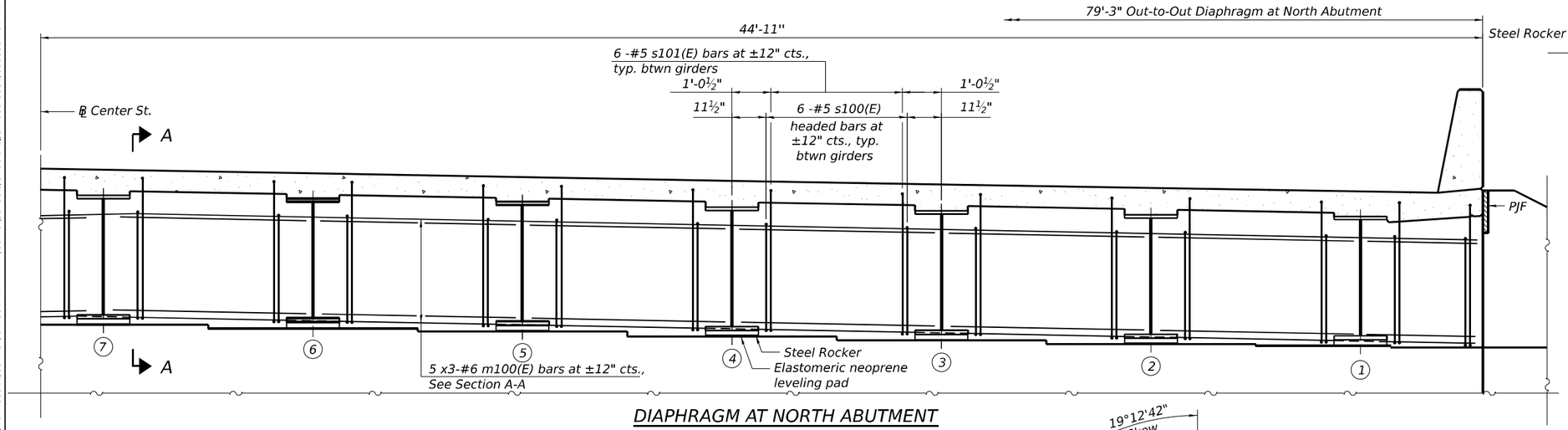

DIAPHRAGM AT NORTH ABUTMENT

MINIMUM BAR LAP

#6 Bar = 4'-4"

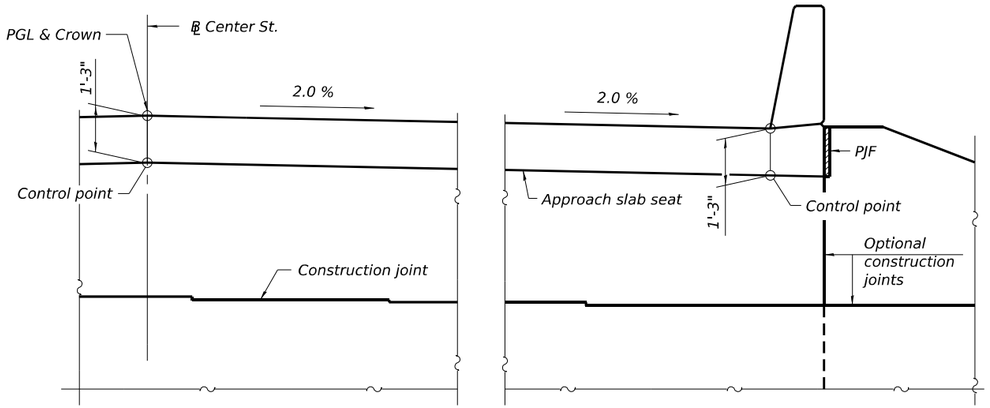

VIEW B-B

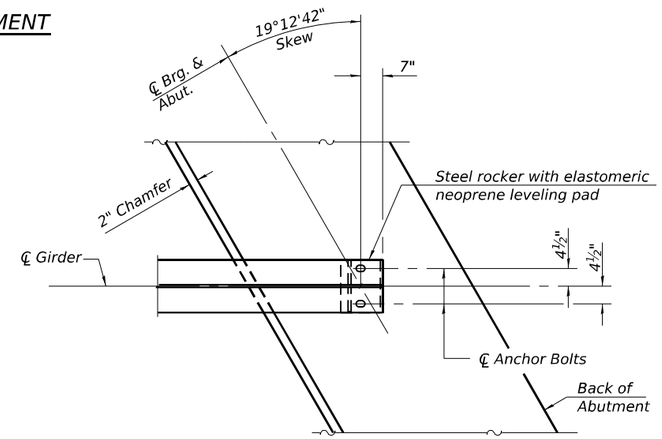

PLAN AT NORTH ABUTMENT

(Showing bottom flange of beam)

NOTES:

1. See Sheet SB-17 of SB-48 for superstructure details and Bill of Material.
2. See Sheet SB-23 of SB-48 for PJF details.
3. The s100(E) and s101(E) bars shall be placed parallel to the girders. Spacing for these bars shall be at right angles to the girders.
4. The approach slab seat shall have a constant slope determined from the control points shown.

MODEL: Default
FILE NAME: pw://transystems-pw.bentley.com:transyscorp-pw1-hosted/Documents/Projects_2018/CH401/401180022/03-WSP/CAD/62R22-INT-4 (Center)/Sheets/Structural/SN-099-8332/0998332-62R22-SB-18-NAbutintegralDiaphragm

4/22/2025 4:04:12 PM

HBM ENGINEERING GROUP, LLC

USER NAME =	DESIGNED - PG	REVISED -	
	CHECKED - MI, JJS	REVISED -	
PLOT SCALE =	DRAWN - PG	REVISED -	
PLOT DATE =	CHECKED - MI, JJS	REVISED -	

STATE OF ILLINOIS
DEPARTMENT OF TRANSPORTATION

NORTH ABUTMENT DIAPHRAGM ELEVATION AND DETAILS
STRUCTURE NO. 099-8332

SHEET SB-19 OF SB-48 SHEETS

F.A.I. RTE.	SECTION	COUNTY	TOTAL SHEETS	SHEET NO.
80	FAI 80 21 INTERCHANGE	WILL	1209	674
		CONTRACT NO. 62R22		
	ILLINOIS	FED. AID PROJECT		

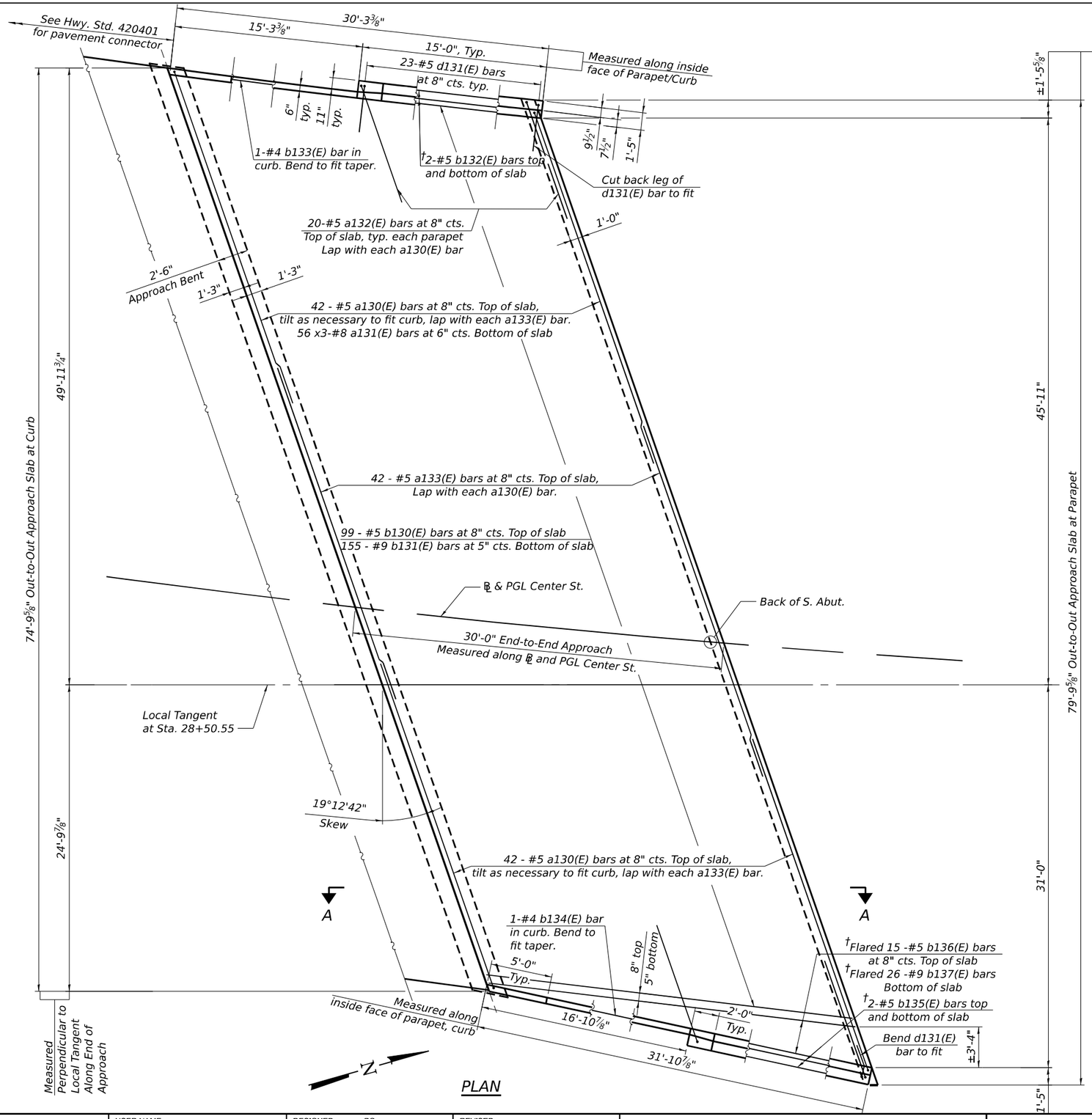

PLAN

NOTES:

1. The joint opening shall be adjusted for temperature per Article 520.04 of the Standard Specifications. However, since this detail is for jointless structures, the length of bridge used to calculate the adjustment shall be equal to half the total bridge length plus the length of the bridge approach slab.
2. Bars indicated thus 60 x3-#8 etc. indicates 60 lines of bars with 3 lengths per line.
3. See Sheet SB-21 of SB-48 for Cross Section, Section A-A, Inside Elevation of Parapet and curb, bar diagrams and Bill of Material.
4. For South Approach Pile Bent details, including top and bottom elevations, see Sheet SB-40.

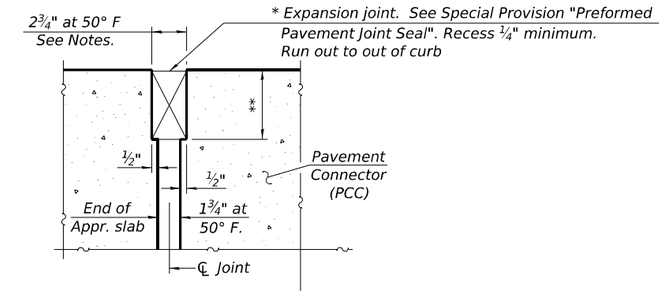

DETAIL A

(at Rt. ∠'s)

* Cost included with Concrete Superstructure (Approach Slab).

** Per manufacturer recommendations

† Cut in field to fit

MINIMUM BAR LAP

#5 bar = 3'-6"
#8 bar = 6'-9"

MODEL: Default
FILE NAME: pw://transystems-pw.bentley.com:transyscorp-pw1-hosted/Documents/Projects_2018/CH401/401180022/03-WSP/CAD/62R22-NIT-4 (Center)/Sheets/Structural/SN-099-8332/0998332-62R22-SB-20-SApproachPlan
4/22/2025 4:04:14 PM

HBM ENGINEERING GROUP, LLC

USER NAME =	DESIGNED - PG	REVISED -	
	CHECKED - MI, JJS	REVISED -	
PLOT SCALE =	DRAWN - PG	REVISED -	
PLOT DATE =	CHECKED - MI, JJS	REVISED -	

STATE OF ILLINOIS
DEPARTMENT OF TRANSPORTATION

SOUTH APPROACH SLAB PLAN
STRUCTURE NO. 099-8332

SHEET SB-20 OF SB-48 SHEETS

F.A.I. RTE.	SECTION	COUNTY	TOTAL SHEETS	SHEET NO.
80	FAI 80 21 INTERCHANGE	WILL	1209	675
		CONTRACT NO. 62R22		
	ILLINOIS	FED. AID PROJECT		

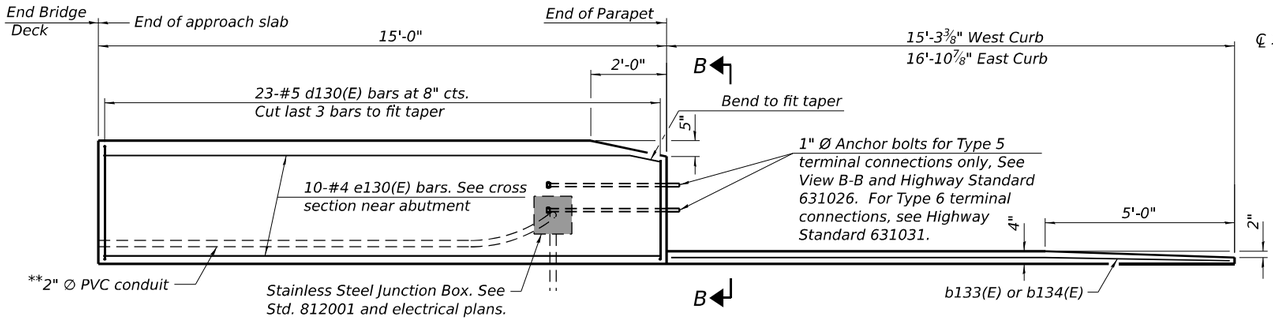

INSIDE ELEVATION OF PARAPET AND CURB

NOTES:

1. For Detail A, see Sheet SB-20 of SB-48 .
2. Parapet concrete shall be paid for as Concrete Superstructure.
3. Approach slab shall be paid for as Concrete Superstructure (Approach Slab).
4. For Approach Pile Bent details, see Sheet SB-40.
5. For Granular Backfill for Structures and drainage treatment details, see Sheet SB-03 of SB-48

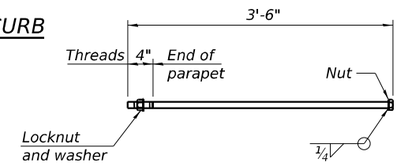

* 1" Ø ANCHOR BOLT

(Anchor bolt assemblies shall be galvanized according to Article 1006.09 of the Standard Specifications)

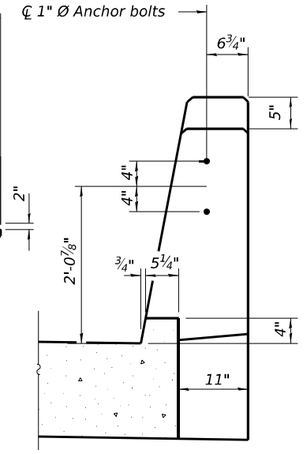

VIEW B-B

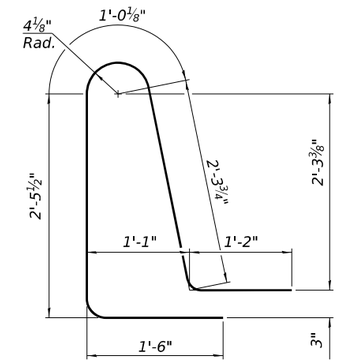

BAR d131(E)

SOUTH APPROACH BILL OF MATERIAL

Bar	No.	Size	Length	Shape
a130(E)	84	#5	27'-7"	
a131(E)	168	#8	31'-11"	
a132(E)	40	#5	7'-4"	
a133(E)	42	#5	34'-0"	
b130(E)	99	#5	29'-10"	
b131(E)	155	#9	29'-10"	
b132(E)	4	#5	14'-8"	
b133(E)	1	#4	15'-0"	
b134(E)	1	#4	16'-5"	
b135(E)	4	#5	15'-2"	
b136(E)	15	#5	31'-5"	
b137(E)	26	#9	31'-5"	
d130(E)	46	#5	6'-5"	
d131(E)	46	#5	8'-6"	
e130(E)	20	#4	14'-8"	
Concrete Superstructure		Cu Yd	4.0	
Bridge Deck Grooving		Sq Yd	235	
Protective Coat		Sq Yd	252	
Concrete Superstructure (Approach Slab)		Cu Yd	106.0	
Reinforcement Bars, Epoxy Coated		Pound	41,660	

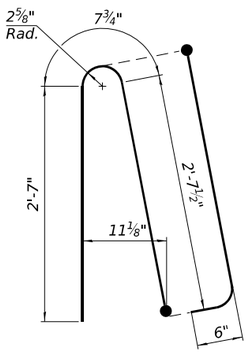

BAR d130(E)

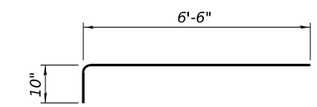

BAR a132(E)

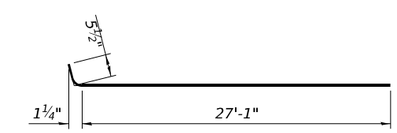

BAR a130(E)

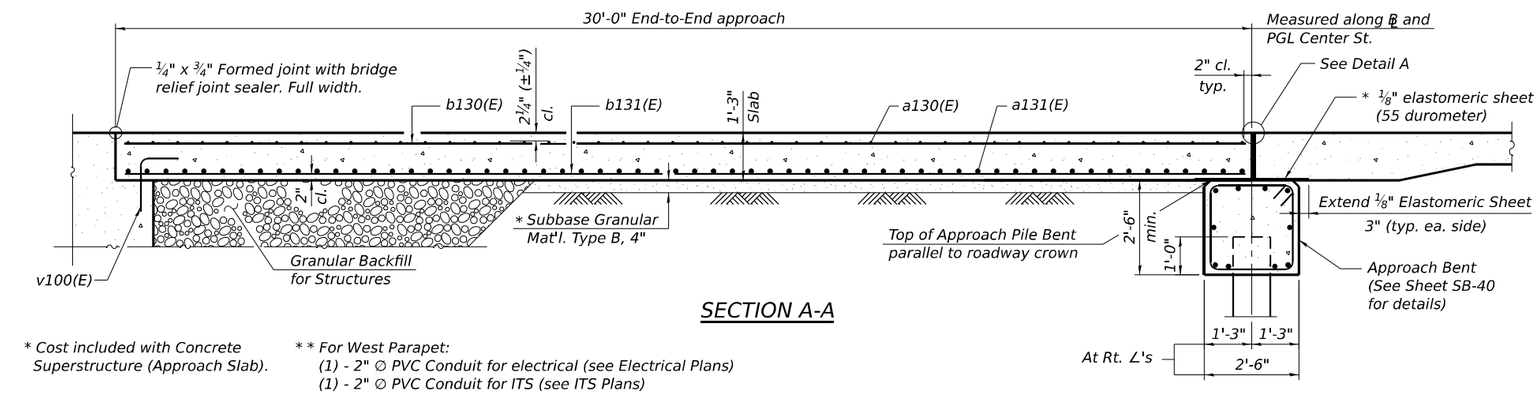

SECTION A-A

* Cost included with Concrete Superstructure (Approach Slab).

** For West Parapet:
(1) - 2" ∅ PVC Conduit for electrical (see Electrical Plans)
(1) - 2" ∅ PVC Conduit for ITS (see ITS Plans)
For East Parapet:
(1) - 2" ∅ PVC Conduit for electrical (see Electrical Plans)

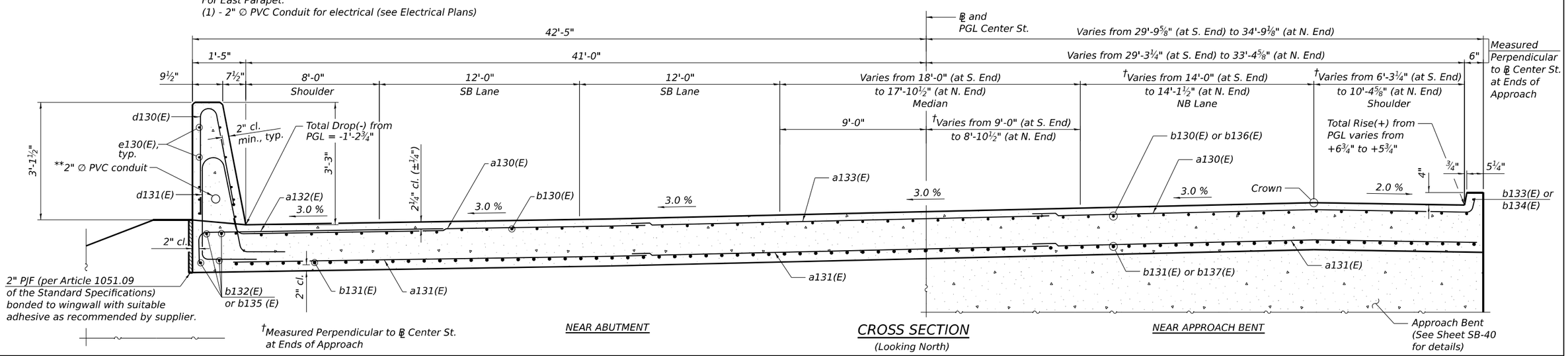

CROSS SECTION

(Looking North)

MODEL: Default
FILE NAME: pw://transystems-pw.bentley.com:transyscorp-pw1-hosted/Documents/Projects_2018/CH401/401180022/03-WSP/CAD/62R22-INT-1 (Center)/Sheets/Structural/SN-099-8332/0998332-62R22-SB-21-SApproach Sections
4/22/2025 4:04:17 PM

HBM ENGINEERING GROUP, LLC	USER NAME =	DESIGNED - PG	REVISED -
		CHECKED - MI, JJS	REVISED -
	PLOT SCALE =	DRAWN - PG	REVISED -
	PLOT DATE =	CHECKED - MI, JJS	REVISED -

STATE OF ILLINOIS
DEPARTMENT OF TRANSPORTATION

SOUTH APPROACH SLAB SECTIONS AND DETAILS
STRUCTURE NO. 099-8332

SHEET SB-21 OF SB-48 SHEETS

F.A.I. RTE.	SECTION	COUNTY	TOTAL SHEETS	SHEET NO.
80	FAI 80 21 INTERCHANGE	WILL	1209	676
		CONTRACT NO. 62R22		
	ILLINOIS	FED. AID PROJECT		

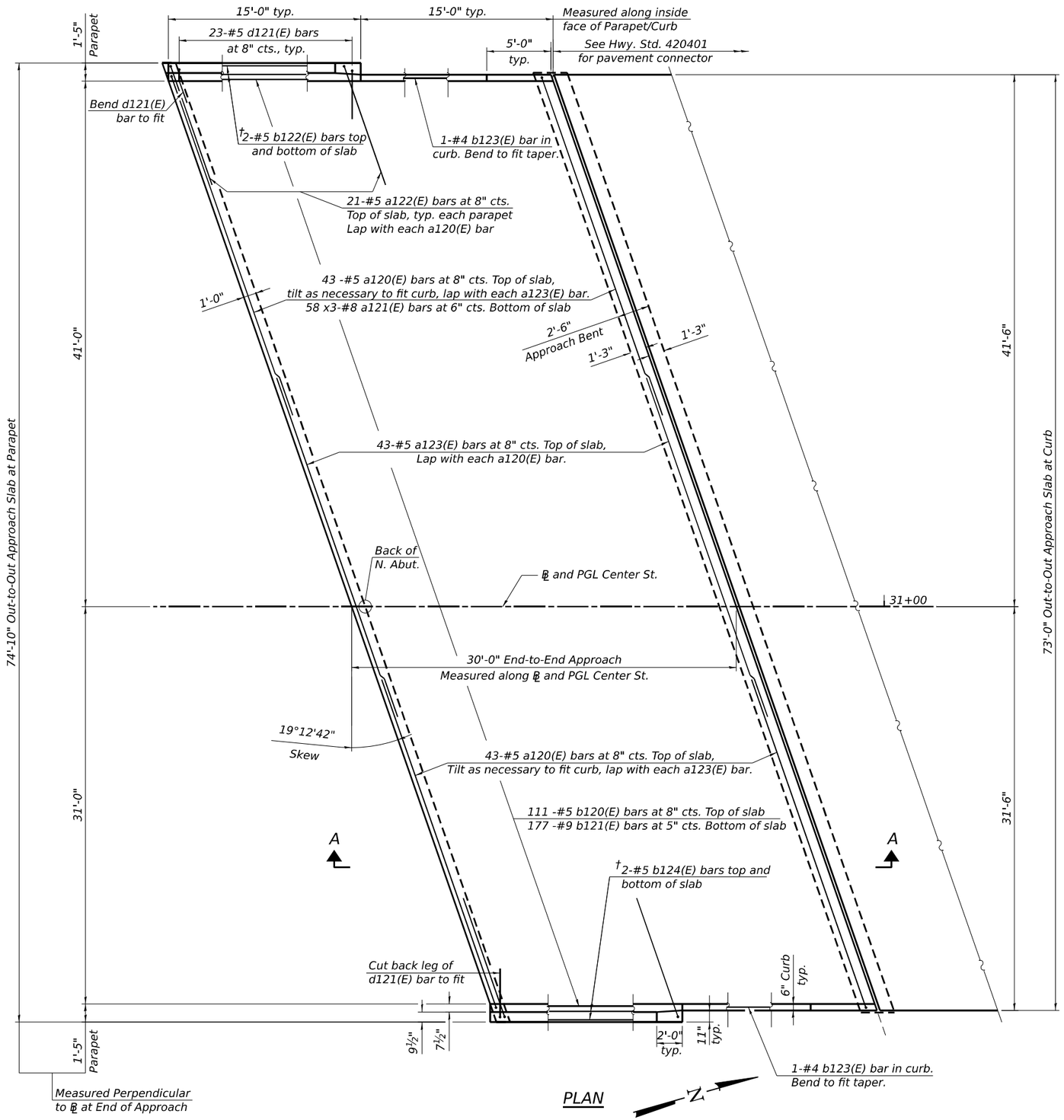

PLAN

NOTES:

1. The joint opening shall be adjusted for temperature per Article 520.04 of the Standard Specifications. However, since this detail is for jointless structures, the length of bridge used to calculate the adjustment shall be equal to half the total bridge length plus the length of the bridge approach slab.
2. Bars indicated thus 60 x3-#8 etc. indicates 60 lines of bars with 3 lengths per line.
3. See Sheet SB-23 of SB-48 for Cross Section, Section A-A, Inside Elevation of Parapet and curb, bar diagrams and Bill of Material.
4. For North Approach Pile bent Details, including top and bottom elevations, see sheet SB-41

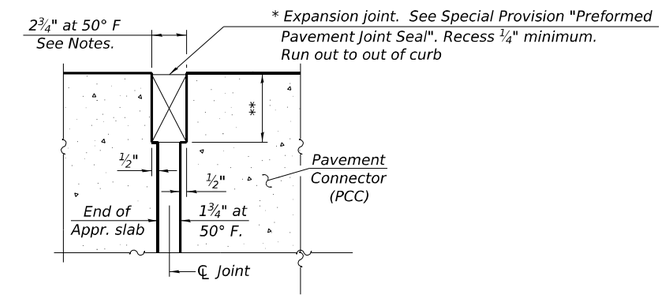

DETAIL A

(at Rt. ∠'s)

* Cost included with Concrete Superstructure (Approach Slab).

** Per manufacturer recommendations

† Cut in field to fit

MINIMUM BAR LAPS

#5 bar = 3'-6"
#8 bar = 6'-9"

MODEL: Default
FILE NAME: pw://transystems-pw.bentley.com:transyscorp-pw1-hosted/Documents/Projects_2018/CH401/401180022/03-WSP/CAD/62R22-INT-4 (Center)/Sheets/Structural/SN-099-8332/0998332-62R22-SB-22-NApproachPlan
4/22/2025 4:04:19 PM

HBM ENGINEERING GROUP, LLC	USER NAME =	DESIGNED - PG	REVISED -
		CHECKED - MI, JJS	REVISED -
	PLOT SCALE =	DRAWN - PG	REVISED -
	PLOT DATE =	CHECKED - MI, JJS	REVISED -

STATE OF ILLINOIS
DEPARTMENT OF TRANSPORTATION

NORTH APPROACH SLAB PLAN
STRUCTURE NO. 099-8332

SHEET SB-22 OF SB-48 SHEETS

F.A.I. RTE.	SECTION	COUNTY	TOTAL SHEETS	SHEET NO.
80	FAI 80 21 INTERCHANGE	WILL	1209	677
		CONTRACT NO. 62R22		
	ILLINOIS	FED. AID PROJECT		

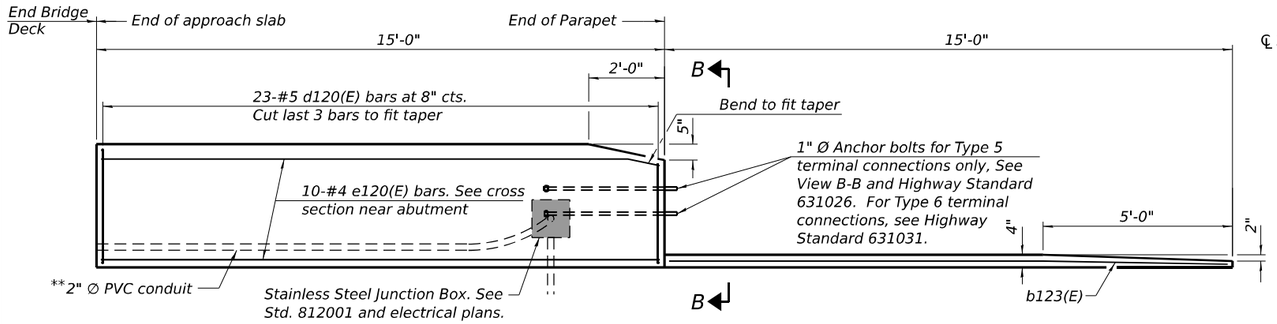

INSIDE ELEVATION OF PARAPET AND CURB

NOTES:

1. For Detail A, see Sheet SB-22 of SB-48 .
2. Parapet concrete shall be paid for as Concrete Superstructure.
3. Approach slab shall be paid for as Concrete Superstructure (Approach Slab).
4. For Approach Pile Bent details see Sheet SB-41.
5. For Granular Backfill for Structures and drainage treatment details, see Sheet SB-03 of SB-48.

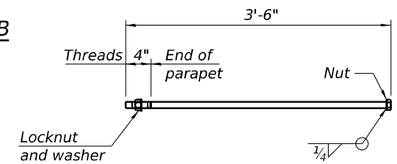

* 1" Ø ANCHOR BOLT

(Anchor bolt assemblies shall be galvanized according to Article 1006.09 of the Standard Specifications)

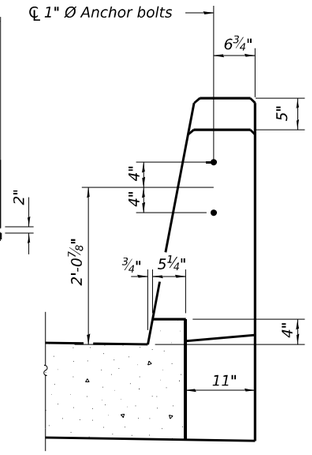

VIEW B-B

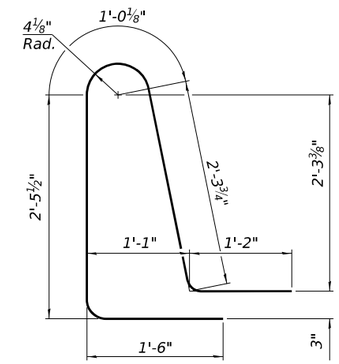

BAR d121(E)

NORTH APPROACH BILL OF MATERIAL

Bar	No.	Size	Length	Shape
a120(E)	86	#5	26'-9"	
a121(E)	174	#8	30'-10"	
a122(E)	42	#5	7'-4"	
a123(E)	43	#5	30'-5"	
b120(E)	111	#5	29'-8"	
b121(E)	177	#9	29'-8"	
b122(E)	4	#5	15'-2"	
b123(E)	2	#4	14'-6"	
b124(E)	4	#5	14'-8"	
d120(E)	46	#5	6'-5"	
d121(E)	46	#5	8'-6"	
e120(E)	20	#4	14'-8"	
Concrete Superstructure			Cu Yd	4.0
Bridge Deck Grooving			Sq Yd	234
Protective Coat			Sq Yd	256
Concrete Superstructure (Approach Slab)			Cu Yd	105.0
Reinforcement Bars, Epoxy Coated			Pound	40,760

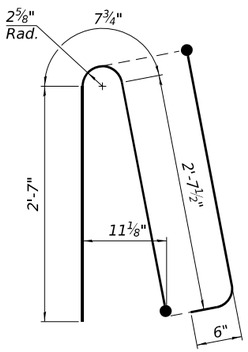

BAR d120(E)

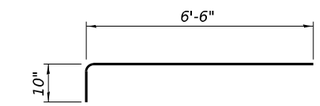

BAR a122(E)

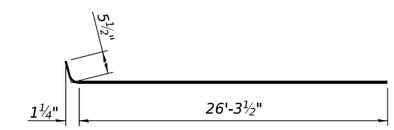

BAR a120(E)

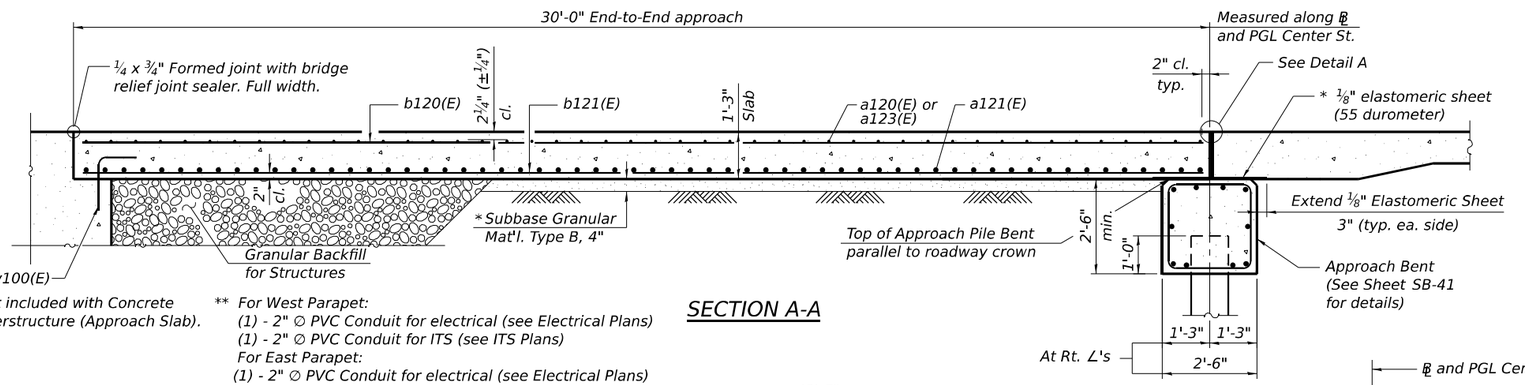

* Cost included with Concrete Superstructure (Approach Slab).

** For West Parapet:
(1) - 2" ∅ PVC Conduit for electrical (see Electrical Plans)
(1) - 2" ∅ PVC Conduit for ITS (see ITS Plans)
For East Parapet:
(1) - 2" ∅ PVC Conduit for electrical (see Electrical Plans)

SECTION A-A

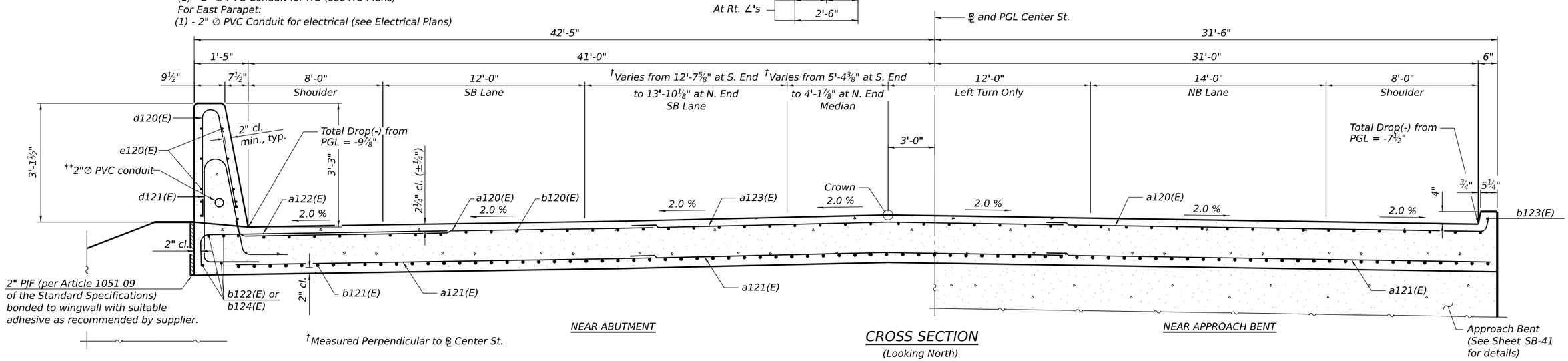

†Measured Perpendicular to ℄ Center St.

CROSS SECTION

(Looking North)

HBM ENGINEERING GROUP, LLC

USER NAME =	DESIGNED - PG	REVISED -
	CHECKED - MI, JJS	REVISED -
PLOT SCALE =	DRAWN - PG	REVISED -
PLOT DATE =	CHECKED - MI, JJS	REVISED -

STATE OF ILLINOIS
DEPARTMENT OF TRANSPORTATION

NORTH APPROACH SLAB SECTIONS AND DETAILS
STRUCTURE NO. 099-8332

SHEET SB-23 OF SB-48 SHEETS

F.A.I. RTE.	SECTION	COUNTY	TOTAL SHEETS	SHEET NO.
80	FAI 80 21 INTERCHANGE	WILL	1209	678
		CONTRACT NO. 62R22		
		ILLINOIS	FED. AID PROJECT	

MODEL: Default
FILE NAME: pw://transystems-pw.bentley.com:transyscorp-pw1-hosted/Documents/Projects_2016/C-1401/401180022/03-WSP/CAD/62R22-INT-1 (Center)/Sheets/Structural/SN-099-8332/0998332-62R22-SB-23-NApproach Sections
4/22/2025 4:04:21 PM

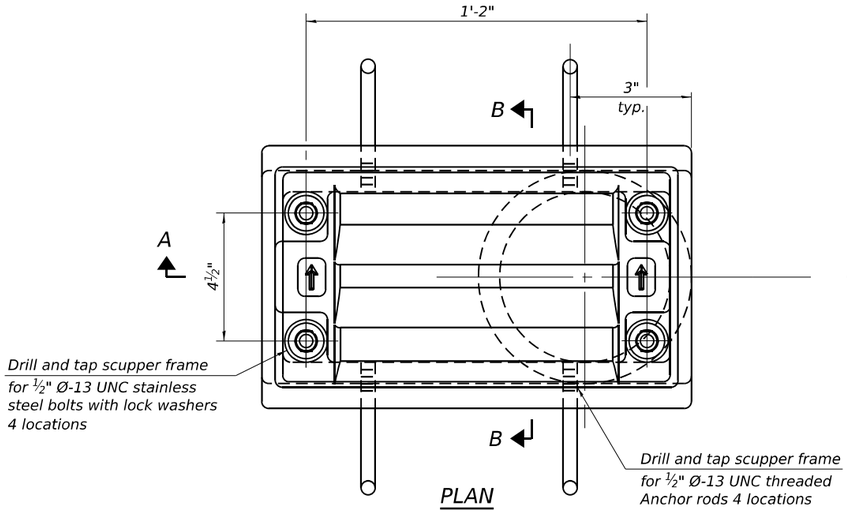

PLAN

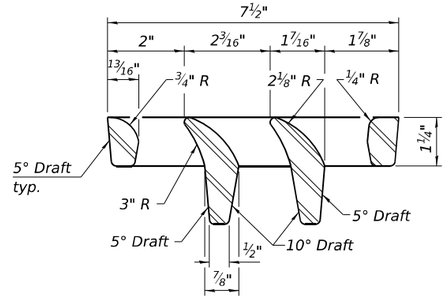

VANE GRATE DETAIL

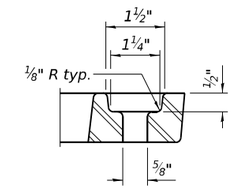

GRATE BOLT HOLE DETAIL

Notes:

All cast iron parts shall be gray iron conforming to the requirements of AASHTO M105, Class 35B and AASHTO M306.

Bolts, anchor rods, nuts and washers shall be according to ASTM A307 and shall be galvanized according to AASHTO M232. As an alternate stainless steel may be used.

Stainless steel hardware shall be according to Article 1006.29(d) of the Standard Specifications.

Structural steel weldments of equal sections and of the same configuration may be substituted for the cast iron scupper frames and downspouts; however, the scupper grates shall remain cast iron. Fillet or full penetration welds shall be used for the weldments. Details shall be submitted to the Engineer for approval.

Structural steel scupper frames and downspouts, when utilized, shall be galvanized according to AASHTO M111.

As an alternate, fiberglass may be used for downspouts according to ASTM D2996 with a short-time rupture strength hoop tensile stress of 30,000 psi min. in lieu of the cast iron or structural steel.

Exterior surfaces of downspouts and exterior exposed surfaces of the scupper frame below deck shall be treated as specified on Sheet SB-17 of SB-48 .

The Contractor shall take appropriate measures to assure that Protective Coat is not applied to the scupper.

Cost of the grate, frame, downspout, anchor rods, nuts and washers including complete installation of the scupper shall be paid for at the contract unit price for Drainage Scuppers, DS-11.

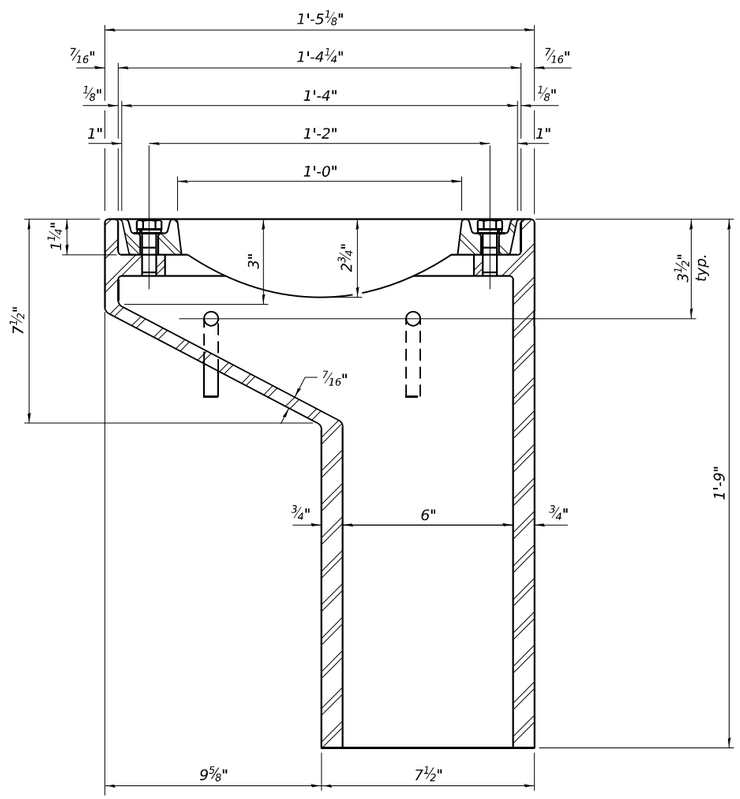

SECTION A-A

See Sheet SB-17 of SB-48 for scupper location relative to parapet.

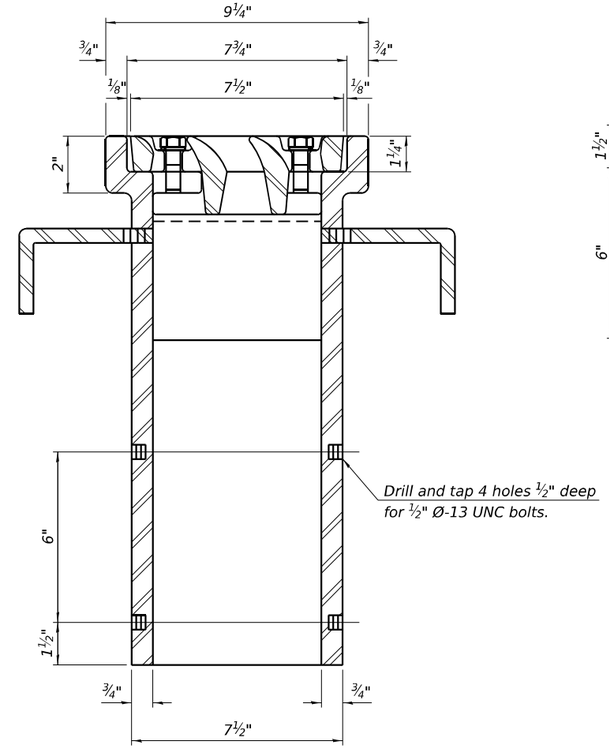

SECTION B-B

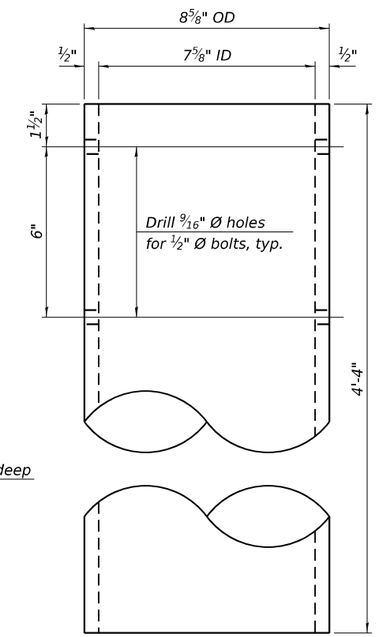

DOWNSPOUT

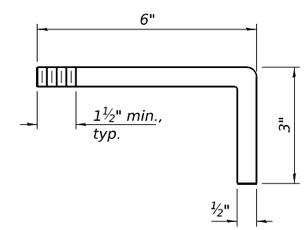

ANCHOR ROD DETAIL

BILL OF MATERIAL

ITEM	UNIT	QUANTITY
Drainage Scuppers, DS-11	Each	3

DS-11 5-15-2023

HBM ENGINEERING GROUP, LLC

USER NAME =	DESIGNED - PG	REVISED -
	CHECKED - MI	REVISED -
PLOT SCALE =	DRAWN - PG	REVISED -
PLOT DATE =	CHECKED - MI	REVISED -

STATE OF ILLINOIS
DEPARTMENT OF TRANSPORTATION

DRAINAGE SCUPPERS, DS-11
STRUCTURE NO. 099-8332

SHEET SB-24 OF SB-48 SHEETS

F.A.I. RTE.	SECTION	COUNTY	TOTAL SHEETS	SHEET NO.
80	FAI 80 21 INTERCHANGE	WILL	1209	679
		CONTRACT NO. 62R22		
	ILLINOIS	FED. AID PROJECT		

MODEL: Default
FILE NAME: pw://transystem-pw.bentley.com:transyscorp-pw1-hosted/Documents/Projects_2018/CH401/401180022/03-WSP/CAD/62R22-INT-4 (Center)/Sheets/Structural/SN-099-8332/0998332-62R22-SB-24-DrainageScupperDS11

4/22/2025 4:04:23 PM

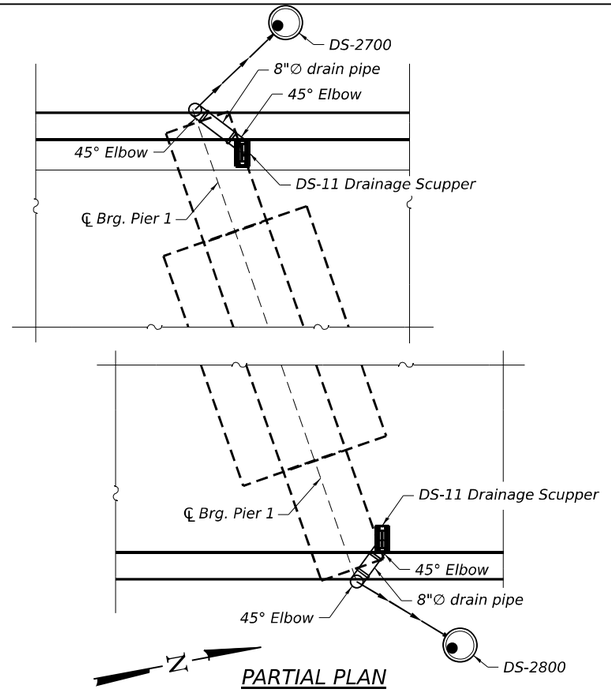

PARTIAL PLAN
(Pier 1)

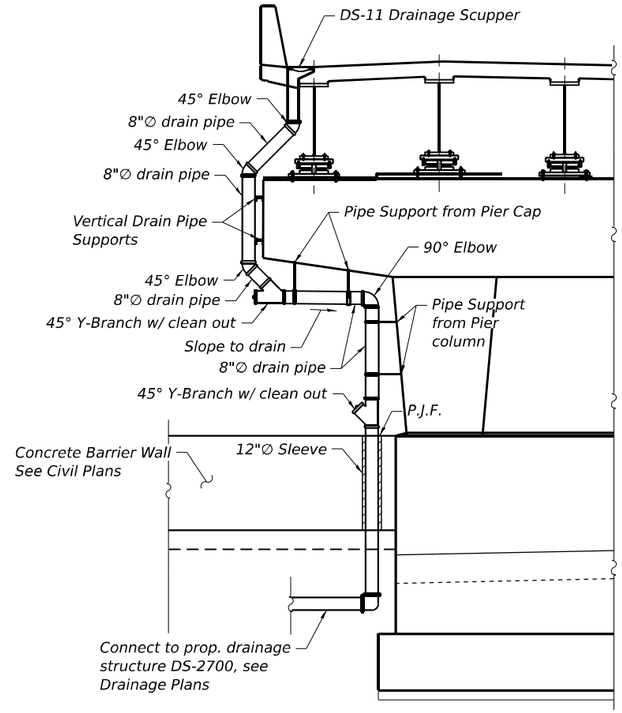

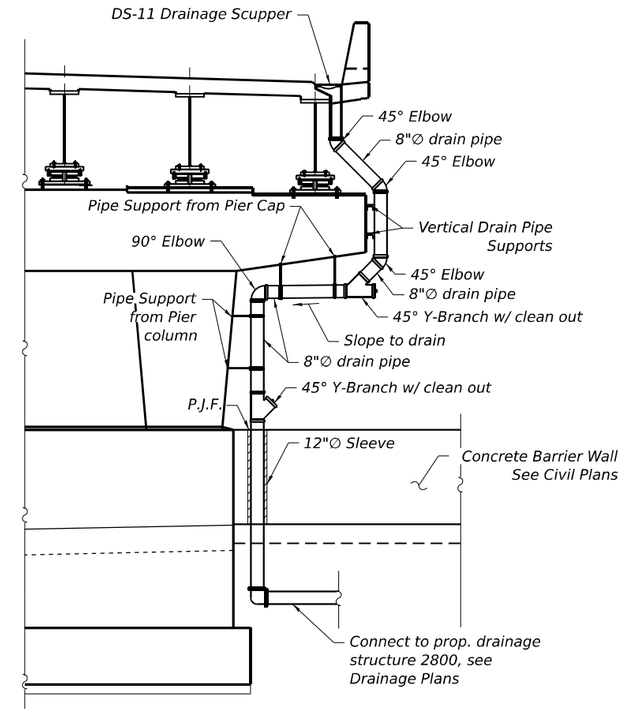

PARTIAL PIER ELEVATION
(North Face)

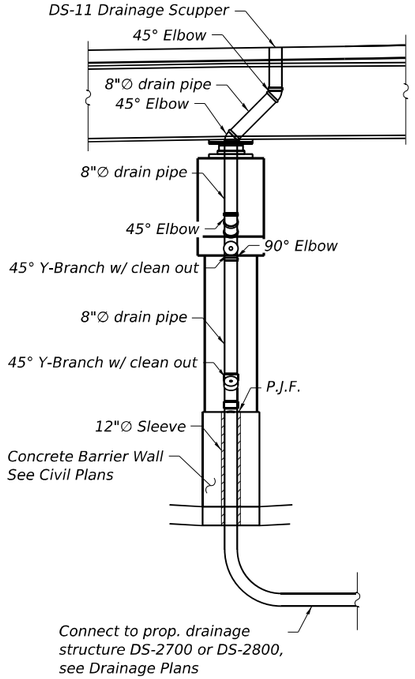

PIER & BARRIER WALL END VIEW

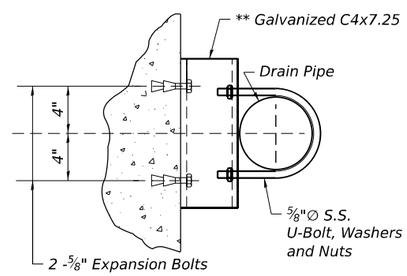

PLAN

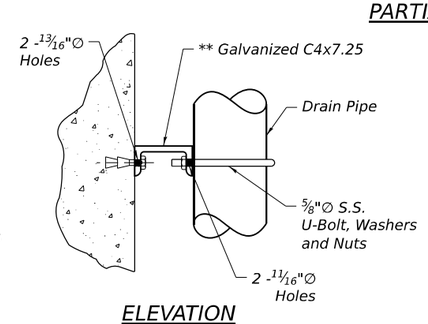

ELEVATION

PIPE SUPPORT DETAIL

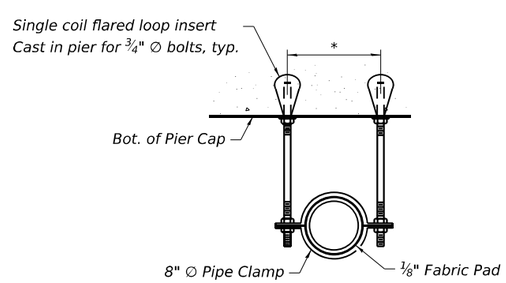

SECTION A-A
*Dimension as Required by Pipe Clamp

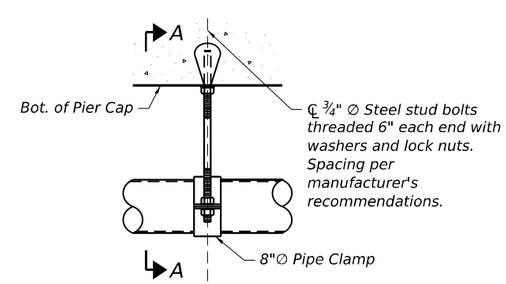

PIPE BRACKET DETAIL

NOTES

1. Provide structural support from proposed deck slab for drain pipe per manufacturer's recommendation, not to exceed 6' cts. Cost included with "Drainage System for Structures".
2. All pipes, pipe fittings, brackets sleeves and PJF needed shall be included with cost of "Drainage System for Structures".
3. Drain Pipes and fittings shall be 8"∅.
4. Bolt pattern and size in drain pipe flange to match scupper flange.
5. Drainage system shall connect to drainage structure. See Drainage Schedule for stationing and offset of drainage structure.

BILL OF MATERIAL

Item	Unit	Quantity
Drainage System for Structures	L. Sum	1

MODEL: Default
FILE NAME: pw://transystems-pw.bentley.com:transyscorp-pw1-hosted/Documents/Projects_2018/CH401/401180022/03-WSP/CAD/62R22-INT-4 (Center)/Sheets/Structural/SN-099-8332/0998332-62R22-SB-25-DrainageSystem

4/22/2025 4:04:25 PM

HBM ENGINEERING GROUP, LLC

USER NAME =	DESIGNED - KJD	REVISED -	
	CHECKED - MI	REVISED -	
PLOT SCALE =	DRAWN - KJD	REVISED -	
PLOT DATE =	CHECKED - MI	REVISED -	

STATE OF ILLINOIS
DEPARTMENT OF TRANSPORTATION

DRAINAGE SYSTEM DETAILS
STRUCTURE NO. 099-8332

SHEET SB-25 OF SB-48 SHEETS

F.A.I. RTE.	SECTION	COUNTY	TOTAL SHEETS	SHEET NO.
80	FAI 80 21 INTERCHANGE	WILL	1209	680

CONTRACT NO. 62R22

ILLINOIS | FED. AID PROJECT

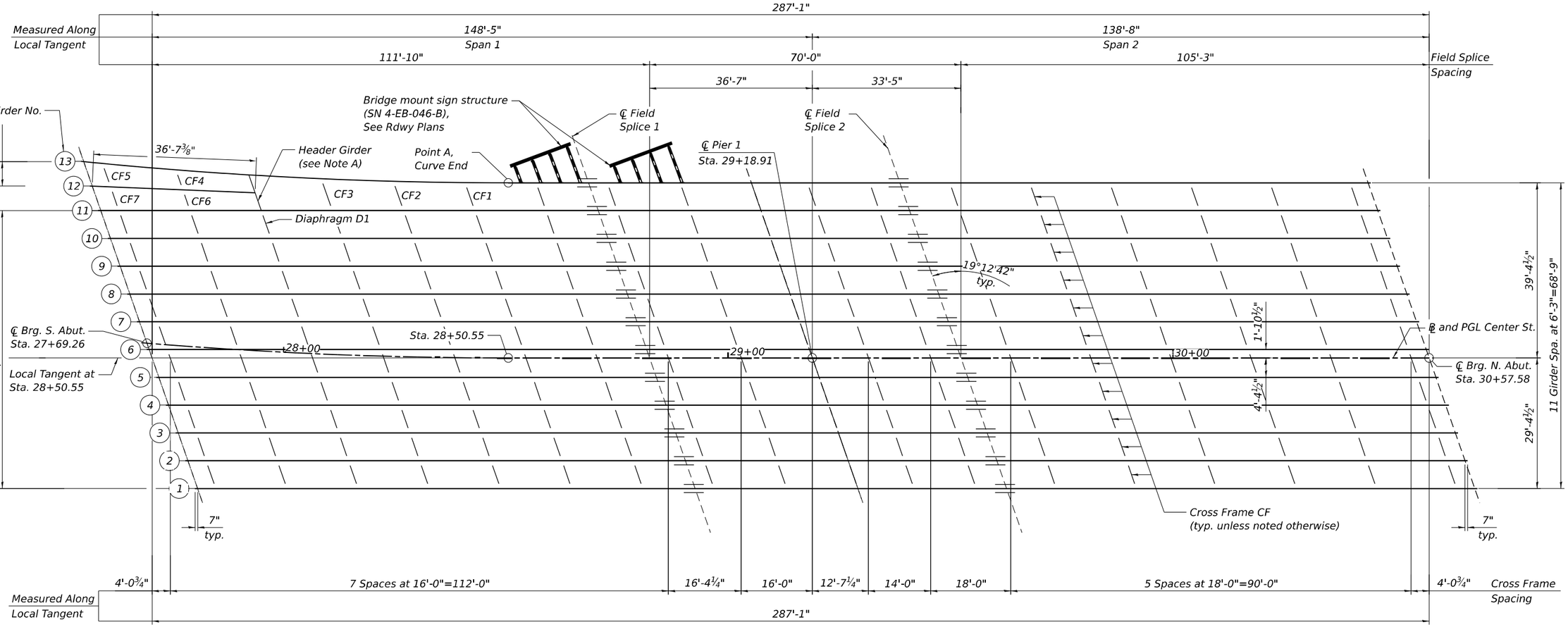

FRAMING PLAN

N

GIRDER 13 COORDINATES

(All Dimensions in feet)

Girder	℄ Brg. S. Abut.		Point A, Curve End		℄ Splice 1	
	X	Y	X	Y	X	Y
13	-113.498	44.145	-18.057	39.375	0.000	39.375

NOTE A:

Header Girder shall be treated as System Redundant Member (SRM) and shall be fabricated as per AWS Chapter 12.

NOTES:

1. All structural steel shall be AASHTO M270 Grade 50.
2. All cross frames or diaphragms shall be installed as steel is erected and secured with erection pins and bolts except as otherwise noted. Individual cross frames or diaphragms at supports may be temporarily disconnected to install bearing anchor bolts.
3. For Girders 1 thru 11 Elevation, see Sheet SB-27.
4. For Girder 12 Elevation, Header Girder Elevation and associated sections and details, see Sheet SB-29.
5. For Girder 13 Elevation see Sheet SB-28.
6. For Girder Moment and Reaction Tables, see Sheets SB-30 and SB-31.
7. For Camber Diagram and Top of Web Elevations, see Sheet SB-32.
8. For Girder Bolted field splice details, see Sheet SB-33.
9. For Diaphragm D1 and Cross Frame CF, see Sheet SB-34.

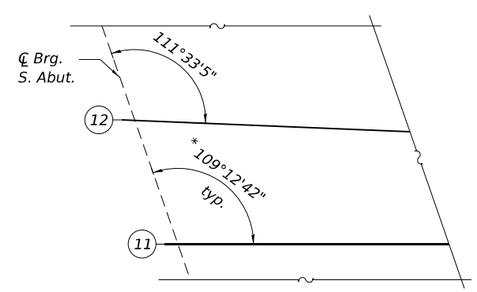

* typical for Girder 1 thru 11

GIRDER LAYOUT

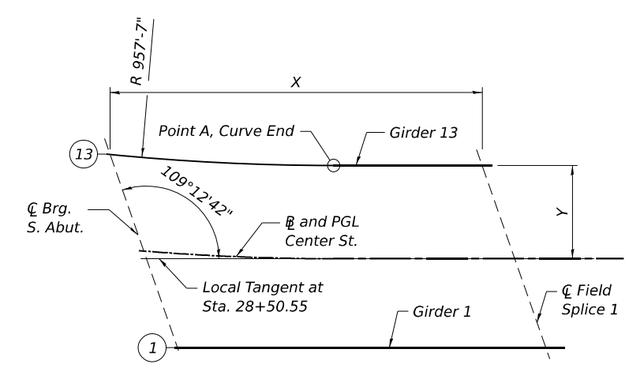

CURVED GIRDER 13 LAYOUT

("X" Measured Along Local Tangent)

MODEL: Default
FILE NAME: pw://transystems-pw.bentley.com:transyscorp-pw1-hosted/Documents/Projects_2018/CH401/401180022/03-WSP/CAD/62R22-INT-4 (Center)/Sheets/Structural/SN-099-8332/0998332-62R22-SB-26-Framing Plan

4/22/2025 4:13:56 PM

HBM ENGINEERING GROUP, LLC

USER NAME =	DESIGNED - ANS	REVISED -
	CHECKED - MI, JJS	REVISED -
PLOT SCALE =	DRAWN - ANS	REVISED -
PLOT DATE =	CHECKED - MI, JJS	REVISED -

STATE OF ILLINOIS
DEPARTMENT OF TRANSPORTATION

FRAMING PLAN
STRUCTURE NO. 099-8332

SHEET SB-26 OF SB-48 SHEETS

F.A.I. RTE.	SECTION	COUNTY	TOTAL SHEETS	SHEET NO.
80	FAI 80 21 INTERCHANGE	WILL	1209	681
		CONTRACT NO. 62R22		
	ILLINOIS	FED. AID PROJECT		

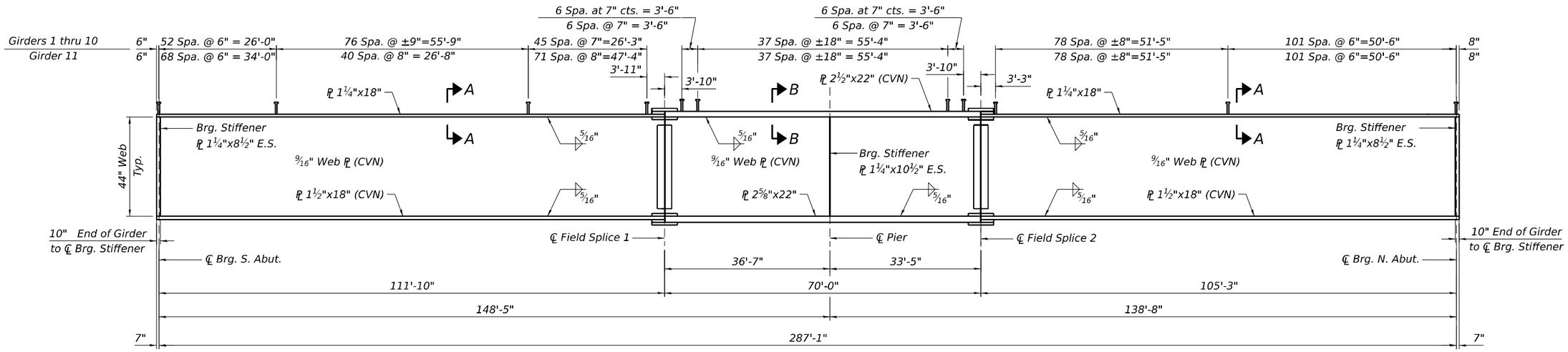

GIRDERS 1 THRU 11 ELEVATION

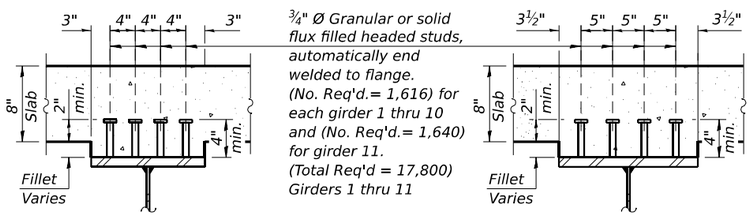

SECTION A-A

SECTION B-B

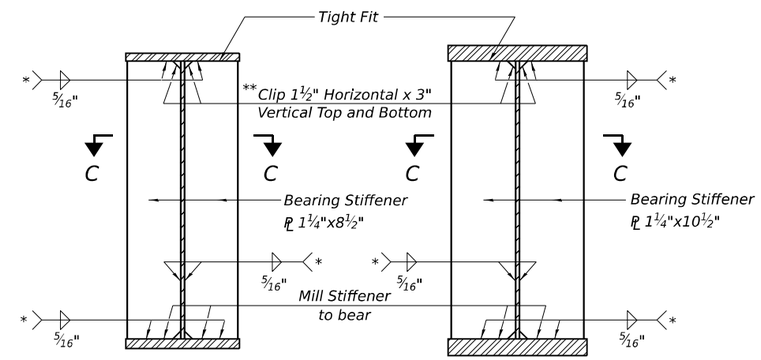

SECTION AT ABUTMENT

SECTION AT PIER

* Terminate ¼" (±⅛") from the end of plate intersects.
** Clip may be rounded for ease of shop painting.

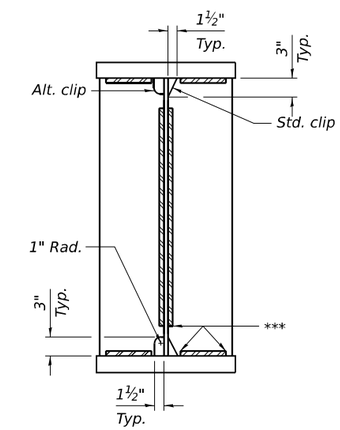

WELD LIMITS AND CLIP DETAILS

*** Stop welds ¼" (±⅛") from edges as shown. Typical.

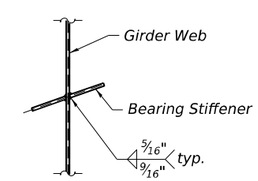

SECTION C-C

NOTES:

1. All structural steel shall be AASHTO M270 Grade 50.

2. Load carrying components designated "CVN" shall conform to the Charpy V-Notch Impact Energy Requirement, Zone 2.

LEGEND:

E.S. Each Side

HBM ENGINEERING GROUP, LLC

USER NAME =	DESIGNED - ANS	REVISED -	
	CHECKED - MI, JJS	REVISED -	
PLOT SCALE =	DRAWN - ANS	REVISED -	
PLOT DATE =	CHECKED - MI, JJS	REVISED -	

STATE OF ILLINOIS
DEPARTMENT OF TRANSPORTATION

GIRDER ELEVATION AND DETAILS (SHEET 1 OF 3)
STRUCTURE NO. 099-8332

SHEET SB-27 OF SB-48 SHEETS

F.A.I. RTE.	SECTION	COUNTY	TOTAL SHEETS	SHEET NO.
80	FAI 80 21 INTERCHANGE	WILL	1209	682
		CONTRACT NO. 62R22		
	ILLINOIS	FED. AID PROJECT		

MODEL: Default
FILE NAME: pw://transystems-pw.bentley.com:transyscorp-pw1-hosted/Documents/Projects_2018/CH401/401180022/03-WSP/CAD/62R22-INT-4 (Center)/Sheets/Structural/SN-099-8332/0998332-62R22-SB-27-Girder Elevation and Details (Sheet 1 of 3)
4/22/2025 4:04:30 PM

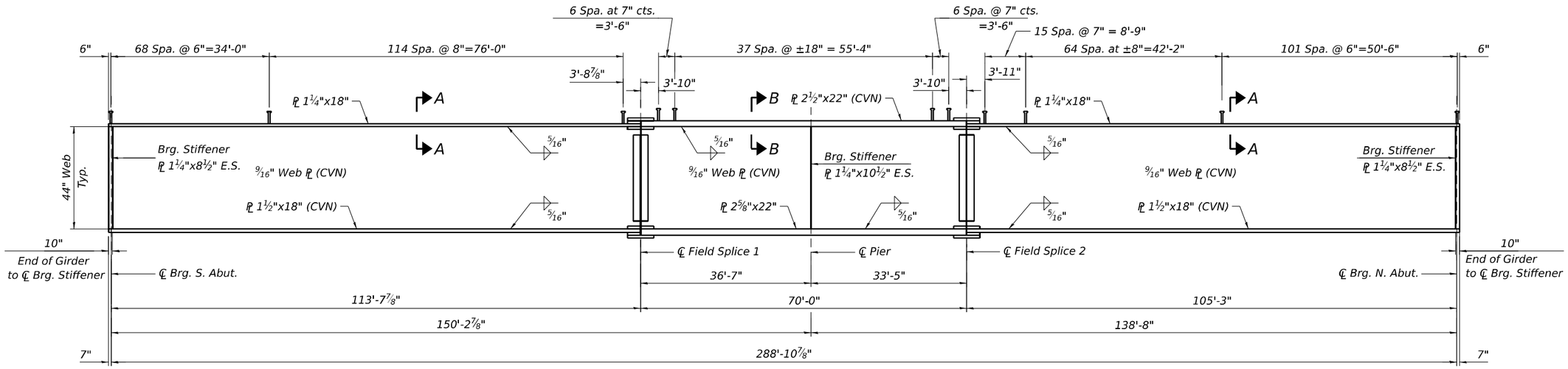

GIRDER 13 ELEVATION

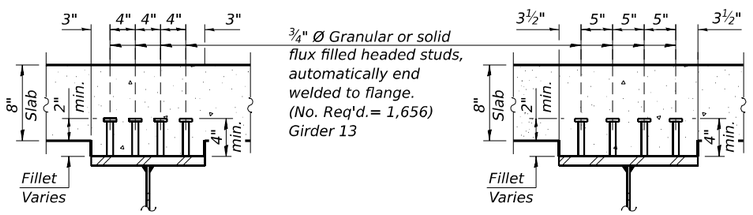

SECTION A-A

SECTION B-B

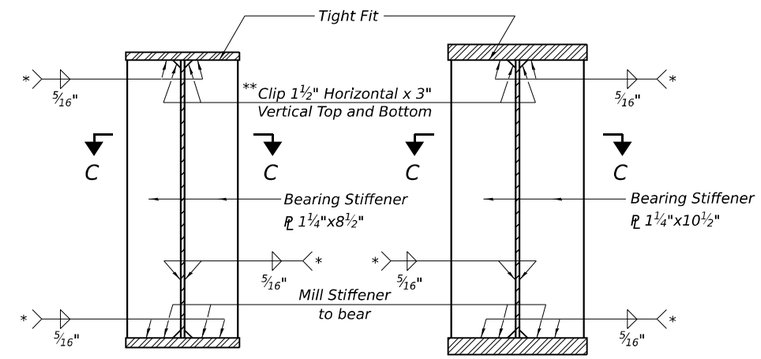

SECTION AT ABUTMENT

SECTION AT PIER

* Terminate ¼" (±⅛") from the end of plate intersects.
** Clip may be rounded for ease of shop painting.

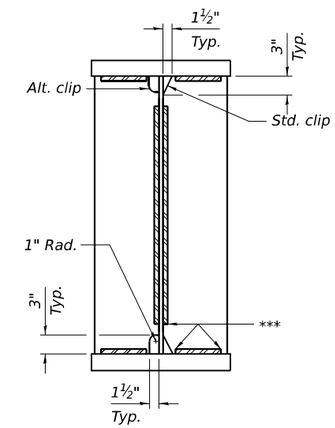

WELD LIMITS AND CLIP DETAILS

*** Stop welds ¼" (±⅛") from edges as shown. Typical.

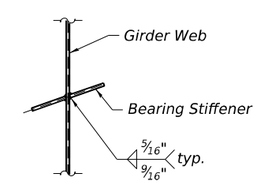

SECTION C-C

NOTES:

1. All structural steel shall be AASHTO M270 Grade 50.

2. Load carrying components designated "CVN" shall conform to the Charpy V-Notch Impact Energy Requirement, Zone 2.

LEGEND:

E.S. Each Side

HBM ENGINEERING GROUP, LLC	USER NAME =	DESIGNED - ANS	REVISED -	STATE OF ILLINOIS DEPARTMENT OF TRANSPORTATION
		CHECKED - MI, JJS	REVISED -	
	PLOT SCALE =	DRAWN - ANS	REVISED -	
	PLOT DATE =	CHECKED - MI, JJS	REVISED -	

GIRDER ELEVATION AND DETAILS (SHEET 2 OF 3)
STRUCTURE NO. 099-8332

SHEET SB-28 OF SB-48 SHEETS

F.A.I. RTE.	SECTION	COUNTY	TOTAL SHEETS	SHEET NO.
80	FAI 80 21 INTERCHANGE	WILL	1209	683
		CONTRACT NO. 62R22		
	ILLINOIS	FED. AID PROJECT		

MODEL: Default
FILE NAME: pw://transystems-pw.bentley.com:transyscorp-pw1-hosted/Documents/Projects_2018/CH401/401180022/03-WSP/CAD/62R22-INT-4 (Center)/Sheets/Structural/SN-099-8332/0998332-62R22-SB-28-Girder Elevation and Details (Sheet 2 of 3)

4/22/2025 4:04:33 PM

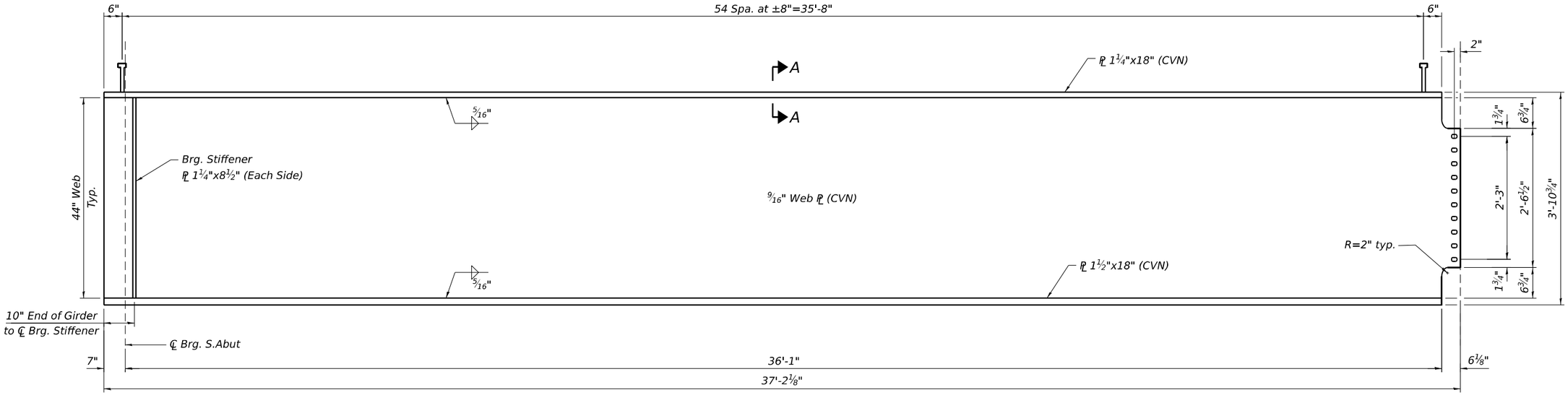

GIRDER 12 ELEVATION

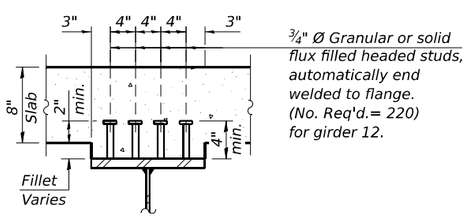

SECTION A-A

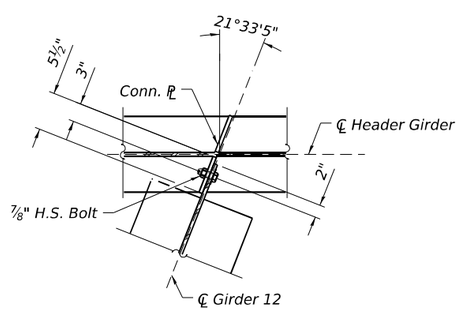

SECTION B-B

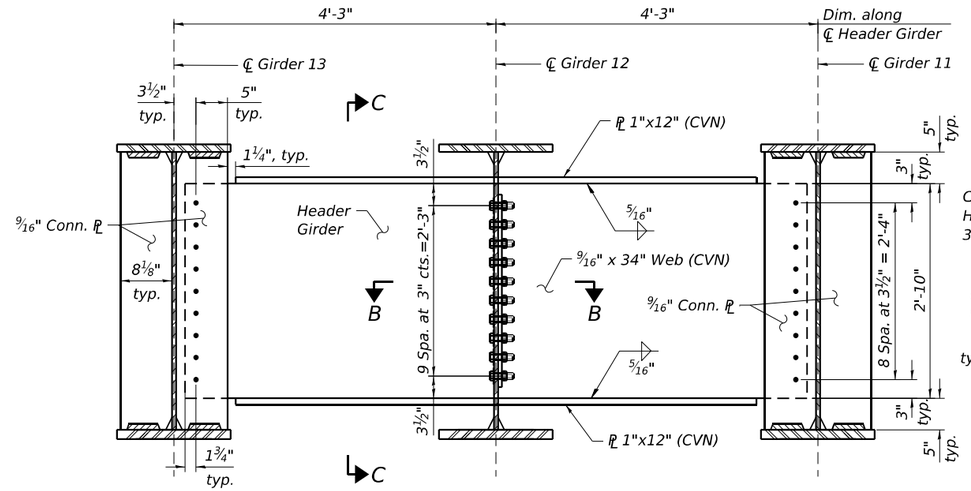

HEADER GIRDER

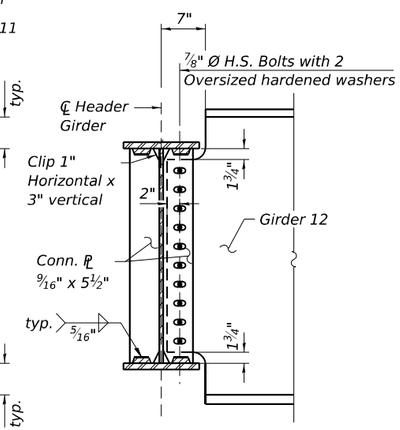

SECTION C-C

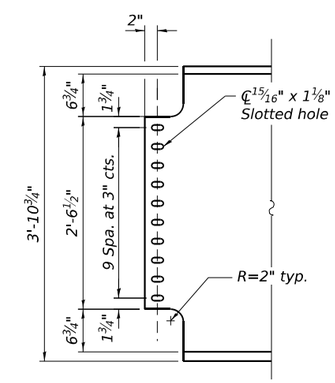

GIRDER 12 END AT HEADER GIRDER

NOTES:

1. All bolts in Header Girder are ⅞" in 15/16" Ø holes unless noted otherwise.
2. All structural steel shall be AASHTO M270 Grade 50.
3. Load carrying components designated "CVN" shall conform to the Charpy V-Notch Impact Energy Requirement, Zone 2.
4. Two hardened washers shall be required for each set of slotted holes.

MODEL: Default
FILE NAME: pw://transystems-pw.bentley.com:transyscorp-pw1-hosted/Documents/Projects_2018/CH401/401180022/03-WSP/CAD/62R22-INT-4 (Center)/Sheets/Structural/SN-099-8332/0998332-62R22-SB-29-Girder Elevation and Details (Sheet 3 of 3)

4/22/2025 4:04:35 PM

HBM ENGINEERING GROUP, LLC	USER NAME =	DESIGNED - ANS	REVISED -	STATE OF ILLINOIS DEPARTMENT OF TRANSPORTATION	GIRDER ELEVATION AND DETAILS (SHEET 3 OF 3) STRUCTURE NO. 099-8332	F.A.I. RTE.	SECTION	COUNTY	TOTAL SHEETS	SHEET NO.
		CHECKED - MI, JJS	REVISED -			80	FAI 80 21 INTERCHANGE	WILL	1209	684
	PLOT SCALE =	DRAWN - ANS	REVISED -		SHEET SB-29 OF SB-48 SHEETS			CONTRACT NO. 62R22		
	PLOT DATE =	CHECKED - MI, JJS	REVISED -				ILLINOIS	FED. AID PROJECT		

EXTERIOR GIRDER G1 MOMENT TABLE

		0.4 Sp. 1	Pier 1	0.6 Sp. 2
I_s	(in⁴)	29,344	65,138	29,344
I_c (n)	(in⁴)	61,074	-	61,074
I_c (3n)	(in⁴)	45,348	-	45,348
I_c (cr)	(in⁴)	-	70,074	-
S_s	(in³)	1,329	2,699	1,329
S_c (n)	(in³)	1,660	-	1,660
S_c (3n)	(in³)	1,535	-	1,535
S_c (cr)	(in³)	-	2,765	-
S_x	(in³)	1,584	-	1,603
DC1	(k/ft)	0.96	1.18	0.96
M_{DC1}	('k)	1,330	3,155	1,001
DC2	(k/ft)	0.26	0.26	0.26
M_{DC2}	('k)	372	804	284
DW	(k/ft)	0.24	0.24	0.24
M_{DW}	('k)	337	728	257
LLDF		0.48	0.52	0.49
M_{L+IM}	('k)	1,997	2,462	1,873
f_t (Strength I)	(ksi)	0.00	0.00	0.00
$M_u + \frac{1}{3} f_t S_x$	('k)	6,128	10,349	5,270
$\Phi_f M_n$	('k)	7,919	11,380	7,919
f_s DC1	(ksi)	12.01	14.03	9.04
f_s DC2	(ksi)	2.91	3.49	2.22
f_s DW	(ksi)	2.63	3.16	2.01
f_s (LL+IM)	(ksi)	14.44	10.68	13.54
f_t (Service II)	(ksi)	0.00	0.00	0.00
$f_s + f_t/2$ (Service II)	(ksi)	36.32	34.56	30.87
Service II Resistance	(ksi)	47.50	47.50	47.50
$f_s + f_t/3$ (Strength I)	(ksi)	47.86	45.33	40.78
$\Phi_f F_n$	(ksi)	-	-	-
V_f	(k)	45.92	67.49	47.11

EXTERIOR GIRDER G1 REACTION TABLE

		S.Abut.	Pier 1	N. Abut
LLDF		0.73	0.68	0.73
OCF		1.07	1.07	1.06
RDC1	(k)	51.74	195.58	45.77
RDC2	(k)	14.06	48.89	11.90
RDW	(k)	12.73	44.27	12.04
RLL	(k)	78.63	155.18	76.60
RIM	(k)	16.10	26.94	15.99
RTotal (Strength I)(Impact)	(k)	267.12	690.70	252.18
RTotal (Strength I)(No Impact)	(k)	238.95	643.56	224.20

INTERIOR GIRDER G2 MOMENT TABLE

		0.4 Sp. 1	Pier 1	0.6 Sp. 2
I_s	(in⁴)	29,344	65,138	29,344
I_c (n)	(in⁴)	61,284	-	61,284
I_c (3n)	(in⁴)	45,508	-	45,508
I_c (cr)	(in⁴)	-	70,138	-
S_s	(in³)	1,329	2,699	1,329
S_c (n)	(in³)	1,661	-	1,661
S_c (3n)	(in³)	1,537	-	1,537
S_c (cr)	(in³)	-	2,764.60	-
S_x	(in³)	1,582	-	1,602
DC1	(k/ft)	0.97	1.18	0.97
M_{DC1}	('k)	1,341	3,181	1,009
DC2	(k/ft)	0.16	0.16	0.16
M_{DC2}	('k)	223.00	482.00	171.00
DW	(k/ft)	0.31	0.31	0.31
M_{DW}	('k)	443.00	957.00	338.00
LLDF		0.48	0.52	0.49
M_{L+IM}	('k)	1,882	2,325	1,764
f_t (Strength I)	(ksi)	0.00	0.00	0.00
$M_u + \frac{1}{3} f_t S_x$	('k)	5,913	10,083	5,069
$\Phi_f M_n$	('k)	7,931	11,371	7,931
f_s DC1	(ksi)	12.11	14.14	9.11
f_s DC2	(ksi)	1.74	2.09	1.34
f_s DW	(ksi)	3.46	4.15	2.64
f_s (LL+IM)	(ksi)	13.59	10.09	12.74
f_t (Service II)	(ksi)	0.00	0.00	0.00
$f_s + f_t/2$ (Service II)	(ksi)	34.98	33.51	29.65
Service II Resistance	(ksi)	47.50	47.50	47.50
$f_s + f_t/3$ (Strength I)	(ksi)	46.29	44.18	39.31
$\Phi_f F_n$	(ksi)	-	-	-
V_f	(k)	45.92	67.49	47.11

INTERIOR GIRDER G2 REACTION TABLE

		S.Abut.	Pier 1	N. Abut
LLDF		0.74	0.68	0.74
OCF		1.07	1.07	1.06
RDC1	(k)	52.19	197.15	45.89
RDC2	(k)	8.44	29.33	7.44
RDW	(k)	16.74	58.20	14.77
RLL	(k)	78.63	155.18	76.60
RIM	(k)	16.10	26.94	15.99
RTotal (Strength I)(Impact)	(k)	266.68	689.11	250.85
RTotal (Strength I)(No Impact)	(k)	238.50	641.97	222.87

INTERIOR GIRDER G11 MOMENT TABLE

		0.4 Sp. 1	Pier 1	0.6 Sp. 2
I_s	(in⁴)	29,344	65,138	29,344
I_c (n)	(in⁴)	61,284	-	61,284
I_c (3n)	(in⁴)	45,508	-	45,508
I_c (cr)	(in⁴)	-	70,138	-
S_s	(in³)	1,329	2,699	1,329
S_c (n)	(in³)	1,661	-	1,661
S_c (3n)	(in³)	1,537	-	1,537
S_c (cr)	(in³)	-	2,765	-
S_x	(in³)	1,571	-	1,599
DC1	(k/ft)	0.97	1.18	0.97
M_{DC1}	('k)	1,499	3,502	1,028
DC2	(k/ft)	0.16	0.16	0.16
M_{DC2}	('k)	275	508	153
DW	(k/ft)	0.31	0.31	0.31
M_{DW}	('k)	414	886	308
LLDF		0.48	0.51	0.49
M_{L+IM}	('k)	1,904	2,352	1,758
f_t (Strength I)	(ksi)	0.00	0.00	0.00
$M_u + \frac{1}{3} f_t S_x$	('k)	6,171	10,458	5,015
$\Phi_f M_n$	('k)	7,931	11,370	7,931
f_s DC1	(ksi)	13.54	15.57	9.28
f_s DC2	(ksi)	2.15	2.21	1.19
f_s DW	(ksi)	3.23	3.85	2.40
f_s (LL+IM)	(ksi)	13.75	10.21	12.70
f_t (Service II)	(ksi)	0.00	0.00	0.00
$f_s + f_t/2$ (Service II)	(ksi)	36.79	34.89	29.39
Service II Resistance	(ksi)	47.50	47.50	47.50
$f_s + f_t/3$ (Strength I)	(ksi)	48.52	45.85	38.93
$\Phi_f F_n$	(ksi)	-	-	-
V_f	(k)	45.92	67.49	47.11

INTERIOR GIRDER G11 REACTION TABLE

		S.Abut.	Pier 1	N. Abut
LLDF		0.74	0.68	0.74
OCF		1.07	1.07	1.06
RDC1	(k)	62.34	200.25	45.26
RDC2	(k)	11.96	30.19	7.27
RDW	(k)	16.74	58.20	14.77
RLL	(k)	78.63	155.18	76.60
RIM	(k)	16.10	26.94	15.99
RTotal (Strength I)(Impact)	(k)	283.76	694.06	249.85
RTotal (Strength I)(No Impact)	(k)	255.59	646.92	221.87

I_s, S_s: Non-composite moment of inertia and section modulus of the steel section used for computing f_s (Total-Strength I, and Service II) due to non-composite dead loads (in.⁴ and in.³).

I_c (n), S_c (n): Composite moment of inertia and section modulus of the steel and deck based upon the modular ratio, "n", used for computing f_s (Total-Strength I, and Service II) in uncracked sections due to short-term composite live loads (in.⁴ and in.³).

I_c (3n), S_c (3n): Composite moment of inertia and section modulus of the steel and deck based upon 3 times the modular ratio, "3n", used for computing f_s (Total-Strength I, and Service II) in uncracked sections, due to long-term composite (superimposed) dead loads (in.⁴ and in.³).

I_c (cr), S_c (cr): Composite moment of inertia and section modulus of the steel and longitudinal deck reinforcement, used for computing f_s (Total-Strength I and Service II) in cracked sections, due to both short-term composite live loads and long-term composite (superimposed) dead loads (in.⁴ and in.³).

S_x: Section modulus about the major axis of a section to the controlling flange, tension or compression, taken as yield moment with respect to the controlling flange over the yield strength of the controlling flange (in.³).

DC1: Un-factored non-composite dead load (kips/ft.).

M_{DC1}: Un-factored moment due to non-composite dead load (kip-ft.).

DC2: Un-factored long-term composite (superimposed excluding future wearing surface) dead load (kips/ft.).

M_{DC2}: Un-factored moment due to long-term composite (superimposed excluding future wearing surface) dead load (kip-ft.).

DW: Un-factored long-term composite (superimposed future wearing surface only) dead load (kips/ft.).

M_{DW}: Un-factored moment due to long-term composite (superimposed future wearing surface only) dead load (kip-ft.).

LLDF: Live Load Distribution Factor for moment and shear computed according to Article 4.6.2.2 and further IDOT provisions.

M_{LL+IM}: Un-factored live load moment plus dynamic load allowance (impact) (kip-ft.).

M_u: Strength I load combination of factored design moments (kip-ft.).
$1.25\ (M_{DC1} + M_{DC2}) + 1.5\ M_{DW} + 1.75\ M_{LL+IM}$

f_t: Factored calculated flange lateral bending stress as calculated using Article 6.10.1.6 and as further simplified by IDOT provisions (ksi).

$\Phi_f M_n$: Factored nominal flexural resistance of the section determined as specified in Article 6.10.7.1 or A6 as applicable (kip-ft.).

f_s DC1: Un-factored stress at edge of flange for controlling steel flange due to vertical non-composite dead loads as calculated below (ksi).
M_{DC1} / S_s

f_s DC2: Un-factored stress at edge of flange for controlling steel flange due to vertical composite dead loads as calculated below (ksi).
M_{DC2} / S_c (3n) or M_{DC2} / S_c (cr) as applicable.

f_s DW: Un-factored stress at edge of flange for controlling steel flange due to vertical composite future wearing surface loads as calculated below (ksi).
M_{DW} / S_c (3n) or M_{DW} / S_c (cr) as applicable.

f_s (LL+IM): Un-factored stress at edge of flange for controlling steel flange due to vertical composite live load plus impact loads as calculated below (ksi).
M_{LL+IM} / S_c (n) or M_{LL+IM} / S_c (cr) as applicable.

$f_s + f_t / 2$ (Service II): Sum of stresses as computed below (ksi).
f_s DC1 + f_s DC2 + f_s DW + 1.3 f_s (LL+IM) + f_t /2

Service II Resistance: Composite ($0.95R_hF_{yf}$) or noncomposite ($0.80R_hF_{yf}$) stress capacity according to Article 6.10.4.2 (ksi).

$f_s + f_t / 3$ (Strength I): Sum of stresses as computed below on non-compact sections (ksi).
$1.25\ (f_s$ DC1 + f_s DC2) + 1.5 f_s DW + 1.75 f_s (LL+IM) + f_t /3

$\Phi_f F_n$: Factored nominal flexural resistance of the section as specified in Article 6.10.7.2 or 6.10.8 as applicable (ksi).

V_f: Maximum factored shear range in span computed according to Article 6.10.10.

OCF: Obtuse Correction Factor according to Article 4.6.2.2.3c or as further simplified by IDOT provisions.

R_{DC1}: Un-factored reaction due to non-composite dead load (kip).

R_{DC2}: Un-factored reaction due to long-term composite (superimposed excluding future wearing surface) dead load (kip).

R_{DW}: Un-factored reaction due to long-term composite (superimposed future wearing surface only) dead load (kip).

R_{LL}: Un-factored live load reaction (kip).

R_{IM}: Un-factored dynamic load allowance (impact) (kip).

R_{Total} (Strength I)(Impact): Strength I load combination of factored design reactions (kip).
$1.25\ (R_{DC1} + R_{DC2}) + 1.5R_{DW} + 1.75\ (R_{LL} + R_{IM})$

R_{Total} (Strength I)(No Impact): Strength I load combination of factored design reactions, not including dynamic load allowance (Impact) (kip).
$1.25\ (R_{DC1} + R_{DC2}) + 1.5R_{DW} + 1.75\ (R_{LL})$

Note:
M_{LL} and R_{LL} include the effects of centrifugal force and superelevation.

HBM ENGINEERING GROUP, LLC

USER NAME =	DESIGNED - ANS	REVISED -
	CHECKED - MI, JJS	REVISED -
PLOT SCALE =	DRAWN - ANS	REVISED -
PLOT DATE =	CHECKED - MI, JJS	REVISED -

STATE OF ILLINOIS
DEPARTMENT OF TRANSPORTATION

GIRDER MOMENT AND REACTION TABLES (SHEET 1 OF 2)
STRUCTURE NO. 099-8332

SHEET SB-30 OF SB-48 SHEETS

F.A.I. RTE.	SECTION	COUNTY	TOTAL SHEETS	SHEET NO.
80	FAI 80 21 INTERCHANGE	WILL	1209	685

CONTRACT NO. 62R22

ILLINOIS | FED. AID PROJECT

MODEL: Default
FILE NAME: pw://transystems-pw.bentley.com:transyscorp-pw1-hosted/Documents/Projects_2018/C401/401180022/03-WSP/CAD/62R22-INT-4 (Center)/Sheets/Structural/SI-099-8332/0998332-62R22-SB-30-Girder Moment and Reaction Tables (Sheet 1 of 2)

4/22/2025 4:04:37 PM

GIRDER G12 MOMENT TABLE

		0.5 Sp. 1
I_s	(in^4)	29,344
I_c (n)	(in^4)	55,705
I_c (3n)	(in^4)	41,510
I_c (cr)	(in^4)	-
S_s	(in^3)	1,329
S_c (n)	(in^3)	1,622
S_c (3n)	(in^3)	1,493
S_c (cr)	(in^3)	-
S_x	(in^3)	1,615
DC1	(k/')	0.80
M_{DC1}	('k)	134.00
DC2	(k/')	0.16
M_{DC2}	('k)	26.23
DW	(k/')	0.24
M_{DW}	('k)	40.00
LLDF		0.42
M_{L+IM}	('k)	343
f_t (Strength I)	(ksi)	0.00
$M_u + \frac{1}{3} f_t S_x$	('k)	1,026
$\Phi_f M_n$	('k)	6,504
f_s DC1	(ksi)	1.21
f_s DC2	(ksi)	0.21
f_s DW	(ksi)	0.32
f_s ($_L$+IM)	(ksi)	2.54
f_t (Service II)	(ksi)	0.00
$f_s + {}^{f_t}/_2$ (Service II)	(ksi)	5.04
Service II Resistance	(ksi)	0.00
$f_s + {}^{f_t}/_3$ (Strength I)	(ksi)	6.70
$\Phi_f F_n$	(ksi)	-
V_f	(k)	31.01

HEADER GIRDER MOMENT TABLE

		0.5 Sp. 1
I_s	(in^4)	9,194
I_c (n)	(in^4)	-
I_c (3n)	(in^4)	-
I_c (cr)	(in^4)	-
S_s	(in^3)	510
S_c (n)	(in^3)	-
S_c (3n)	(in^3)	-
S_c (cr)	(in^3)	-
S_x	(in^3)	
DC1	(k/')	15.00
M_{DC1}	('k)	31.88
DC2	(k/')	2.87
M_{DC2}	('k)	6.17
DW	(k/')	5.11
M_{DW}	('k)	10.86
LLDF		-
M_{L+IM}	('k)	100
f_t (Strength I)	(ksi)	0.00
$M_u + \frac{1}{3} f_t S_x$	('k)	239
$\Phi_f M_n$	('k)	2,125
f_s DC1	(ksi)	0.75
f_s DC2	(ksi)	0.15
f_s DW	(ksi)	0.26
f_s ($_L$+IM)	(ksi)	2.36
f_t (Service II)	(ksi)	0.00
$f_s + {}^{f_t}/_2$ (Service II)	(ksi)	4.22
Service II Resistance	(ksi)	0.00
$f_s + {}^{f_t}/_3$ (Strength I)	(ksi)	5.63
$\Phi_f F_n$	(ksi)	-
V_f	(k)	26.00

EXTERIOR GIRDER G13 MOMENT TABLE

		0.4 Sp. 1	Pier 1	0.6 Sp. 2
I_s	(in^4)	29,344	65,138	29,344
I_c (n)	(in^4)	61,892	-	61,074
I_c (3n)	(in^4)	45,977	-	45,348
I_c (cr)	(in^4)	-	70,074	-
S_s	(in^3)	1,329	2,699	1,329
S_c (n)	(in^3)	1,665	-	1,660
S_c (3n)	(in^3)	1,541	-	1,535
S_c (cr)	(in^3)	-	2,762	-
S_x	(in^3)	1,576	-	1,603
DC1	(k/')	0.96	1.75	0.96
M_{DC1}	('k)	1,533	3,387	994
DC2	(k/')	0.26	0.26	0.26
M_{DC2}	('k)	445	866	274
DW	(k/')	0.24	0.24	0.24
M_{DW}	('k)	348	736	253
LLDF		0.48	0.51	0.49
M_{L+IM}	('k)	1,901	2,269	1,729
f_t (Strength I)	(ksi)	0.00	0.00	0.00
$M_u + \frac{1}{3} f_t S_x$	('k)	6,322	10,390	4,989
$\Phi_f M_n$	('k)	6,398	11,376	6,467
f_s DC1	(ksi)	13.84	15.06	8.98
f_s DC2	(ksi)	3.46	3.76	2.14
f_s DW	(ksi)	2.71	3.20	1.98
f_s ($_L$+IM)	(ksi)	13.70	9.86	12.50
f_t (Service II)	(ksi)	0.00	0.00	0.00
$f_s + {}^{f_t}/_2$ (Service II)	(ksi)	37.83	34.83	29.34
Service II Resistance	(ksi)	47.50	47.50	47.50
$f_s + {}^{f_t}/_3$ (Strength I)	(ksi)	49.67	45.57	38.73
$\Phi_f F_n$	(ksi)	-	-	-
V_f	(k)	56.60	72.48	49.35

GIRDER G12 REACTION TABLE

		S. Abut.	Header Girder
LLDF		0.50	0.50
OCF	(k)	1.04	1.04
RDC1	(k)	15.97	14.91
RDC2	(k)	2.87	2.87
RDW	(k)	4.58	4.14
RLL	(k)	43.31	33.96
RIM	(k)	11.74	9.20
RTotal (Strength I)(Impact)	(k)	126.76	103.97
RTotal (Strength I)(No Impact)	(k)	106.21	87.87

HEADER GIRDER REACTION TABLE

		Girder 13	Girder 11
LLDF		-	-
OCF	(k)	-	-
RDC1	(k)	7.50	7.50
RDC2	(k)	1.44	1.44
RDW	(k)	2.56	2.56
RLL	(k)	18.00	18.00
RIM	(k)	4.00	4.00
RTotal (Strength I)(Impact)	(k)	53.50	53.50
RTotal (Strength I)(No Impact)	(k)	46.50	46.50

EXTERIOR GIRDER G13 REACTION TABLE

		S.Abut.	Pier 1	N. Abut
LLDF		0.74	0.69	0.73
OCF	(k)	1.07	1.07	1.06
RDC1	(k)	59.14	206.40	46.41
RDC2	(k)	20.24	51.37	15.52
RDW	(k)	12.91	44.43	11.13
RLL	(k)	79.60	168.14	77.30
RIM	(k)	16.23	29.10	16.14
RTotal (Strength I)(Impact)	(k)	286.29	734.03	257.63
RTotal (Strength I)(No Impact)	(k)	257.89	683.10	229.38

I_s , S_s : Non-composite moment of inertia and section modulus of the steel section used for computing f_s (Total-Strength I, and Service II) due to non-composite dead loads (in.⁴ and in.³).

I_c (n), S_c (n): Composite moment of inertia and section modulus of the steel and deck based upon the modular ratio, "n", used for computing f_s (Total-Strength I, and Service II) in uncracked sections due to short-term composite live loads (in.⁴ and in.³).

I_c (3n), S_c (3n): Composite moment of inertia and section modulus of the steel and deck based upon 3 times the modular ratio, "3n", used for computing f_s (Total-Strength I, and Service II) in uncracked sections, due to long-term composite (superimposed) dead loads (in.⁴ and in.³).

I_c (cr), S_c (cr): Composite moment of inertia and section modulus of the steel and longitudinal deck reinforcement, used for computing f_s (Total-Strength I and Service II) in cracked sections, due to both short-term composite live loads and long-term composite (superimposed) dead loads (in.⁴ and in.³).

S_x : Section modulus about the major axis of a section to the controlling flange, tension or compression, taken as yield moment with respect to the controlling flange over the yield strength of the controlling flange (in.³).

DC1: Un-factored non-composite dead load (kips/ft.).

M_{DC1}: Un-factored moment due to non-composite dead load (kip-ft.).

DC2: Un-factored long-term composite (superimposed excluding future wearing surface) dead load (kips/ft.).

M_{DC2}: Un-factored moment due to long-term composite (superimposed excluding future wearing surface) dead load (kip-ft.).

DW: Un-factored long-term composite (superimposed future wearing surface only) dead load (kips/ft.).

M_{DW} : Un-factored moment due to long-term composite (superimposed future wearing surface only) dead load (kip-ft.).

LLDF: Live Load Distribution Factor for moment and shear computed according to Article 4.6.2.2 and further IDOT provisions.

M_{L+IM}: Un-factored live load moment plus dynamic load allowance (impact) (kip-ft.).

M_u : Strength I load combination of factored design moments (kip-ft.).
$1.25\ (M_{DC1} + M_{DC2}) + 1.5\ M_{DW} + 1.75\ M_{L+IM}$

f_t : Factored calculated flange lateral bending stress as calculated using Article 6.10.1.6 and as further simplified by IDOT provisions (ksi).

$\Phi_f M_n$: Factored nominal flexural resistance of the section determined as specified in Article 6.10.7.1 or A6 as applicable (kip-ft.).

f_s DC1: Un-factored stress at edge of flange for controlling steel flange due to vertical non-composite dead loads as calculated below (ksi).
M_{DC1} / S_s

f_s DC2: Un-factored stress at edge of flange for controlling steel flange due to vertical composite dead loads as calculated below (ksi).
M_{DC2} / S_c (3n) or M_{DC2} / S_c (cr) as applicable.

f_s DW: Un-factored stress at edge of flange for controlling steel flange due to vertical composite future wearing surface loads as calculated below (ksi).
M_{DW} / S_c (3n) or M_{DW} / S_c (cr) as applicable.

f_s ($_L$+ IM): Un-factored stress at edge of flange for controlling steel flange due to vertical composite live load plus impact loads as calculated below (ksi).
M_{L+IM} / S_c (n) or M_{L+IM} / S_c (cr) as applicable.

$f_s + f_t / 2$ (Service II): Sum of stresses as computed below (ksi).
f_s DC1 + f_s DC2 + f_s DW + 1.3 f_s ($_L$+ IM) + f_t /2

Service II Resistance: Composite ($0.95R_hF_{yf}$) or noncomposite ($0.80R_hF_{yf}$) stress capacity according to Article 6.10.4.2 (ksi).

$f_s + f_t / 3$ (Strength I): Sum of stresses as computed below on non-compact sections (ksi).
$1.25\ (f_s DC1 + f_s DC2) + 1.5\ f_s DW + 1.75\ f_s$ ($_L$+ IM) + f_t /3

$\Phi_f F_n$: Factored nominal flexural resistance of the section as specified in Article 6.10.7.2 or 6.10.8 as applicable (ksi).

V_f: Maximum factored shear range in span computed according to Article 6.10.10.

OCF: Obtuse Correction Factor according to Article 4.6.2.2.3c or as further simplified by IDOT provisions.

R_{DC1}: Un-factored reaction due to non-composite dead load (kip).

R_{DC2}: Un-factored reaction due to long-term composite (superimposed excluding future wearing surface) dead load (kip).

R_{DW} : Un-factored reaction due to long-term composite (superimposed future wearing surface only) dead load (kip).

R_L : Un-factored live load reaction (kip).

R_{IM} : Un-factored dynamic load allowance (impact) (kip).

R_{Total} (Strength I)(Impact): Strength I load combination of factored design reactions (kip).
$1.25\ (R_{DC1} + R_{DC2}) + 1.5R_{DW} + 1.75\ (R_L + R_{IM})$

R_{Total} (Strength I)(No Impact): Strength I load combination of factored design reactions, not including dynamic load allowance (Impact) (kip).
$1.25\ (R_{DC1} + R_{DC2}) + 1.5R_{DW} + 1.75\ (R_L)$

Note:
M_L and R_L include the effects of centrifugal force and superelevation.

HBM ENGINEERING GROUP, LLC

USER NAME =	DESIGNED - ANS	REVISED -
	CHECKED - MI, JJS	REVISED -
PLOT SCALE =	DRAWN - ANS	REVISED -
PLOT DATE =	CHECKED - MI, JJS	REVISED -

STATE OF ILLINOIS
DEPARTMENT OF TRANSPORTATION

GIRDER MOMENT AND REACTION TABLES (SHEET 2 OF 2)
STRUCTURE NO. 099-8332

SHEET SB-31 OF SB-48 SHEETS

F.A.I. RTE.	SECTION	COUNTY	TOTAL SHEETS	SHEET NO.
80	FAI 80 21 INTERCHANGE	WILL	1209	686

CONTRACT NO. 62R22

ILLINOIS FED. AID PROJECT

MODEL: Default
FILE NAME: pw://transystems-pw.bentley.com:transyscorp-pw1-hosted/Documents/Projects_2018/CH401/401180022/03-WSP/CAD/62R22-INT-4 (Center)/Sheets/Structural/SI-099-8332/0998332-62R22-SB-30-Girder Moment and Reaction Tables (Sheet 2 of 2)

4/22/2025 4:04:41 PM

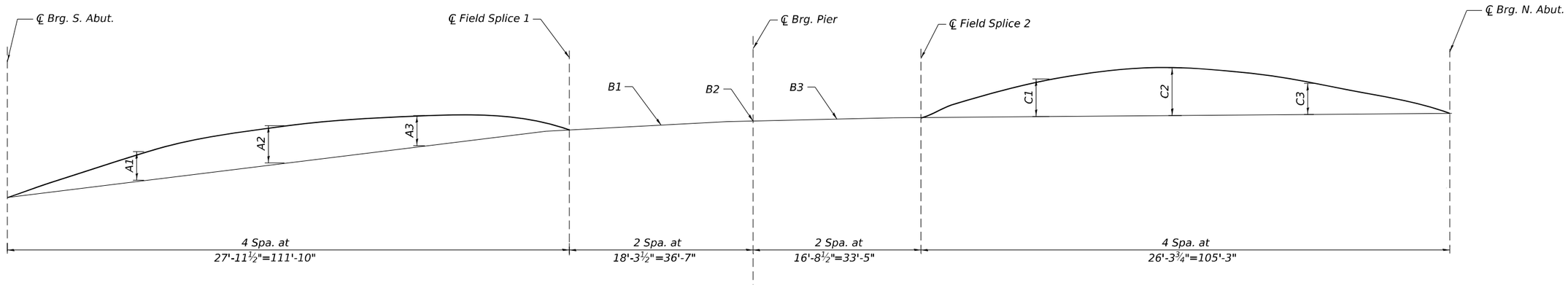

CAMBER DIAGRAM

TOP OF WEB ELEVATIONS

(For Fabrication Only)

Girder	℄ Brg. S. Abut.	℄ Splice 1	℄ Brg. Pier 1	℄ Splice 2	℄ Brg. N. Abut.
1	610.80	611.93	612.41	612.59	612.55
2	610.88	612.03	612.51	612.71	612.68
3	610.79	611.93	612.45	612.70	612.82
4	610.55	611.79	612.36	612.66	612.94
5	610.33	611.68	612.29	612.64	613.07
6	610.02	611.55	612.19	612.57	613.13
7	609.88	611.39	612.04	612.42	613.02
8	609.66	611.23	611.88	612.27	612.90
9	609.41	611.05	611.71	612.10	612.77
10	609.21	610.91	611.56	611.97	612.67
11	608.96	610.73	611.40	611.80	612.53
13	608.59	610.59	611.26	611.66	612.43

Girder	℄ Brg. S. Abut.	Header Girder
12	608.79	609.33

CAMBER ORDINATES

Girder	A1	A2	A3	B1	B2	B3	C1	C2	C3
1 Thru 6	3"	4"	3"	0"	0"	0"	3 1/2"	5"	3"
7 Thru 11; 13	2"	3"	2"	0"	0"	0"	3 1/2"	5"	3"
12	0"	-	-	-	-	-	-	-	-

MODEL: Default
FILE NAME: pw://transystem-pw.bentley.com:transyscorp-pw1-hosted/Documents/Projects_2018/CH401/401180022/03-WSP/CAD/62R22-INT-4 (Center)/Sheets/Structural/SN-099-8332/0998332-62R22-SB-31-Camber Diagram

HBM ENGINEERING GROUP, LLC

USER NAME =	DESIGNED - ANS	REVISED -	
	CHECKED - MI, LAB	REVISED -	
PLOT SCALE =	DRAWN - ANS	REVISED -	
PLOT DATE =	CHECKED - MI, LAB	REVISED -	

STATE OF ILLINOIS
DEPARTMENT OF TRANSPORTATION

CAMBER DIAGRAM
STRUCTURE NO. 099-8332

SHEET SB-32 OF SB-48 SHEETS

F.A.I. RTE.	SECTION	COUNTY	TOTAL SHEETS	SHEET NO.
80	FAI 80 21 INTERCHANGE	WILL	1209	687
		CONTRACT NO. 62R22		
	ILLINOIS	FED. AID PROJECT		

4/24/2025 2:14:22 PM

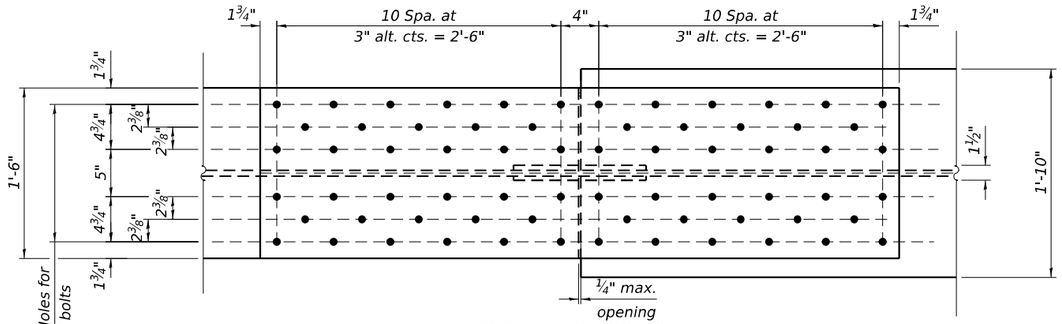

TOP FLANGE SPLICE

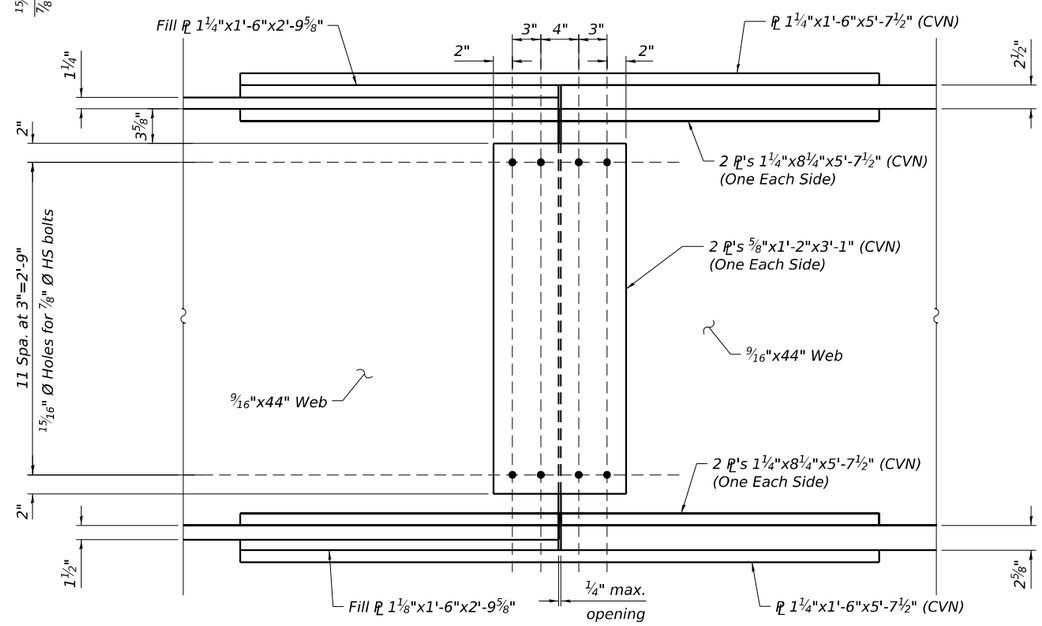

WEB SPLICE

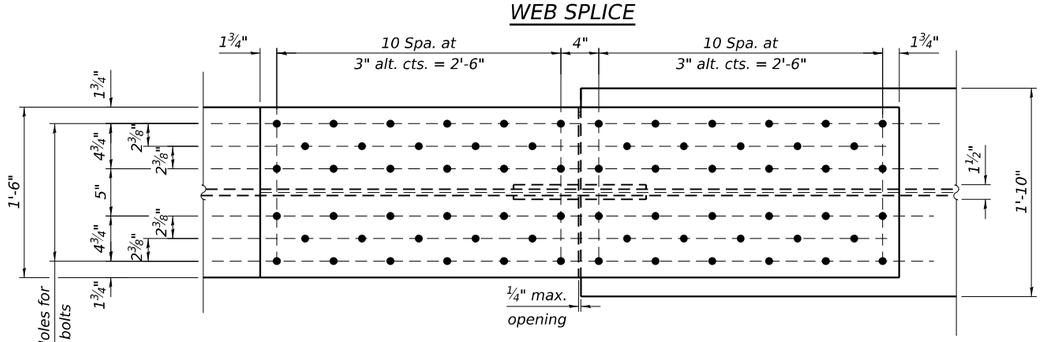

BOTTOM FLANGE SPLICE

SPLICES 1 AND 2
(GIRDERS 1 THRU 11 AND GIRDER 13)

(Splice 1 Shown; Splice 2 Opposite Hand)
(24 Required)

NOTES:

1. See Sheet SB-26 for girder framing plan.
2. Load carrying components designated "CVN" shall conform to the Charpy V-Notch Impact Energy Requirement, Zone 2.
3. Use ⅞" Ø H.S. bolts with 15⁄16" Ø holes for all splice connections.
4. All structural steel shall be AASHTO M270 Grade 50.

HBM ENGINEERING GROUP, LLC

USER NAME =	DESIGNED - ANS	REVISED -	
	CHECKED - MI, JJS	REVISED -	
PLOT SCALE =	DRAWN - ANS	REVISED -	
PLOT DATE =	CHECKED - MI, JJS	REVISED -	

STATE OF ILLINOIS
DEPARTMENT OF TRANSPORTATION

STRUCTURAL STEEL DETAILS (SHEET 1 OF 2)
STRUCTURE NO. 099-8332

SHEET SB-33 OF SB-48 SHEETS

F.A.I. RTE.	SECTION	COUNTY	TOTAL SHEETS	SHEET NO.
80	FAI 80 21 INTERCHANGE	WILL	1209	688

CONTRACT NO. 62R22

ILLINOIS FED. AID PROJECT

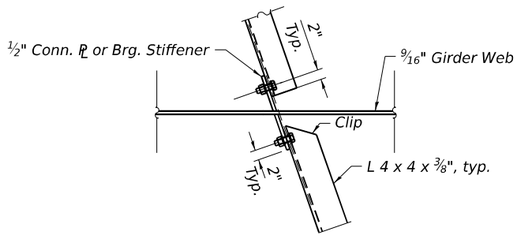

INTERIOR CROSS FRAME PLAN

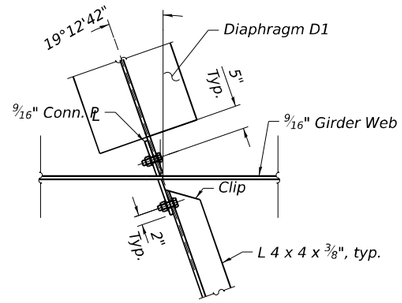

SECTION A-A

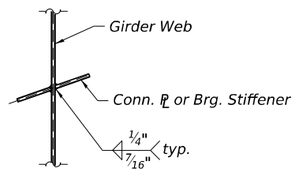

SECTION B-B

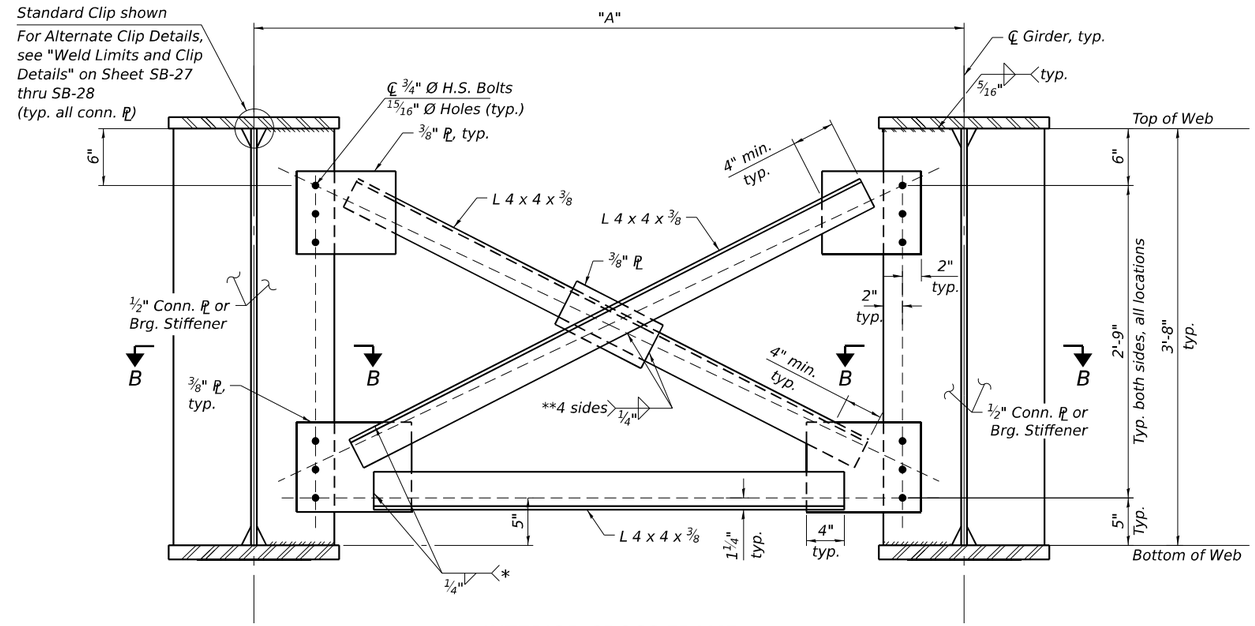

INTERIOR CROSS FRAME

*Fillet weld angles along 3 sides on one face of gusset plate; however, if cross-frames are galvanized, weld all-around.

**If cross-frames are galvanized, weld all-around.

CROSS FRAME DIM. "A" TABLE

Cross Frame	Dim. A	# Req
CF	6'-7 3/8"	191
CF1	6'-8"	1
CF2	6'-11 7/8"	1
CF3	7'-7 1/8"	1
CF4	4'-9 1/8"	1
CF5	5'-6 7/8"	1
CF6	4'-11 1/2"	1
CF7	5'-7 7/8"	1

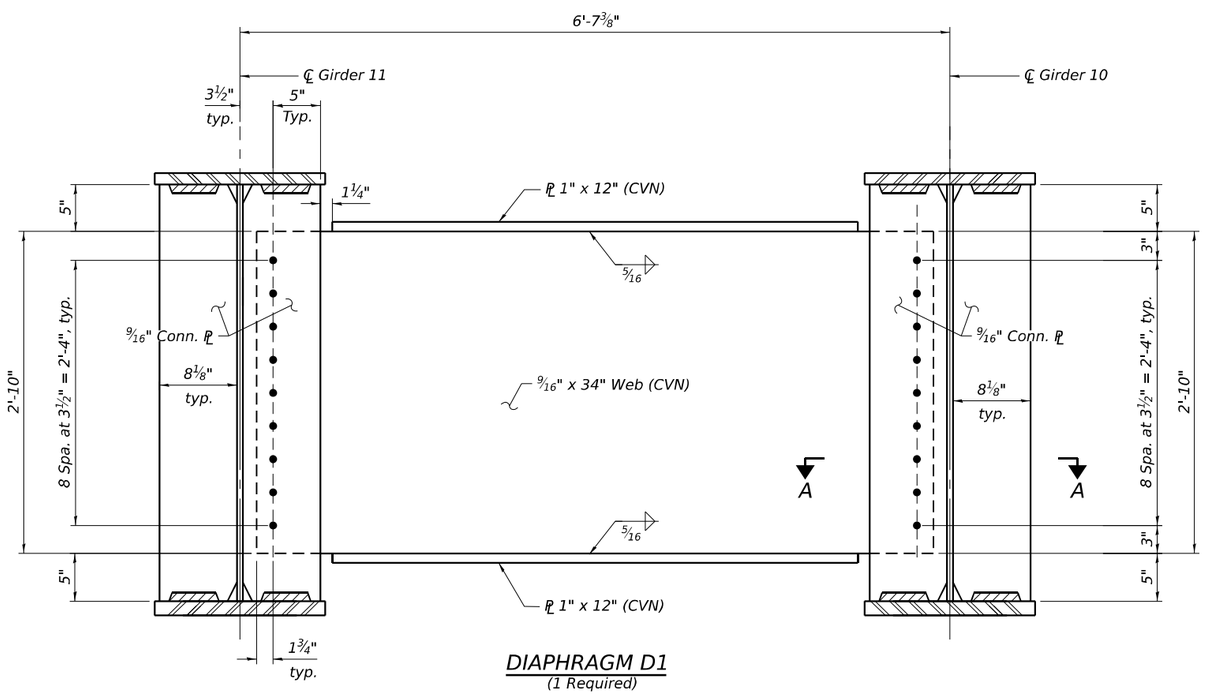

DIAPHRAGM D1
(1 Required)

NOTES:

1. Load carrying components designated "CVN" shall conform to the Charpy V-Notch Impact Energy Requirement, Zone 2.
2. All cross frames shall be installed as steel is erected and secured with erection pins and bolts except as otherwise noted. Individual cross frames at supports may be temporarily disconnected to install bearing anchor rods.
3. Provide 15/16" Ø holes for 3/4" Ø High Strength bolts. Two hardened washers required for each set of oversized holes (typical all cross frame connections).
4. All structural steel shall be AASHTO M270 Grade 50.

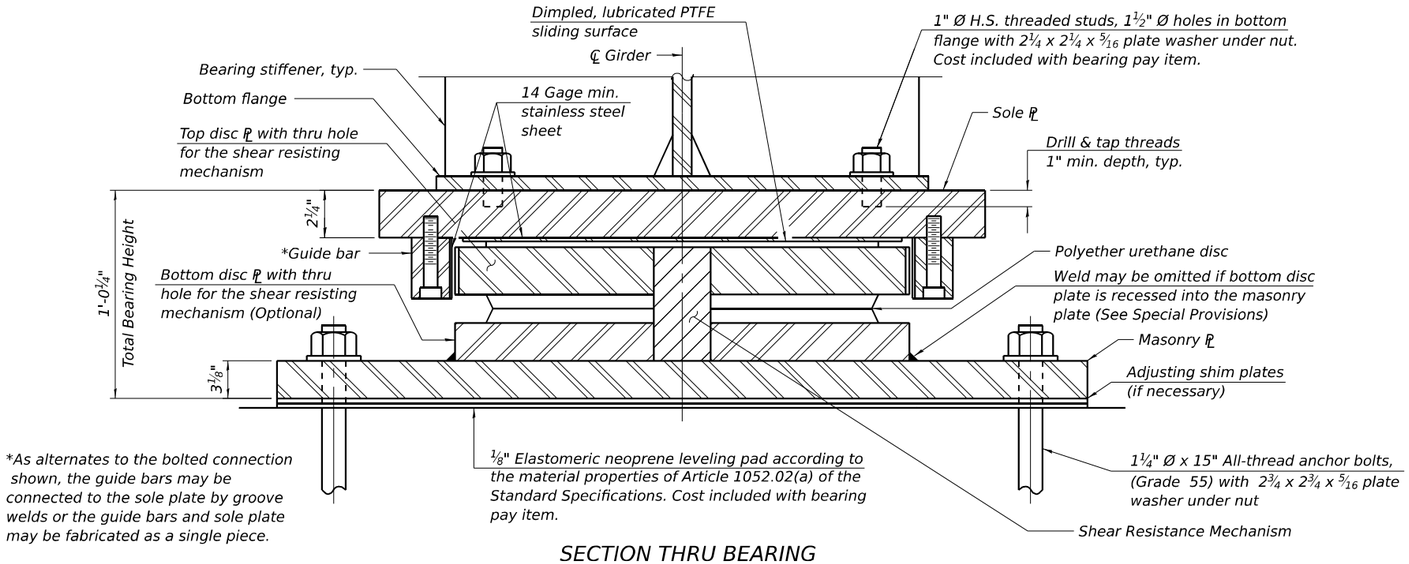

SECTION THRU BEARING

DESIGN DATA - PIER

Unfactored Vertical Dead Load Reaction (R_{DC})	253.7 kips
Unfactored Vertical Wearing Surface Reaction (R_{DW})	47.8 kips
Unfactored Vertical Live Load without Impact Reaction (R_{LL})	189.4 kips
Maximum Strength or Extreme Event Lateral Reaction (H_u)	144.1 kips
Maximum Strength Limit State Rotation (Θ_u according to Article 14.4.2.2)	0.076 rad
Unfactored Design Thermal Movement from 50° F (ΔT)	1.642 in.
Service I Factored Lateral Reaction	98.2 kips
Service I Rotation	0.052 rad
Strength I Factored Longitudinal Movement	1.970 in.
Service I Factored Vertical Reaction	490.9 kips
Strength I Factored Vertical Reaction	720.3 kips

Service I Load Factors = 1.0DC + 1.0DW + 1.00LL
Strength I Load Factors = 1.25DC + 1.5DW + 1.75LL + 1.2TU
Extreme Event Load Factors = 1.0EQ

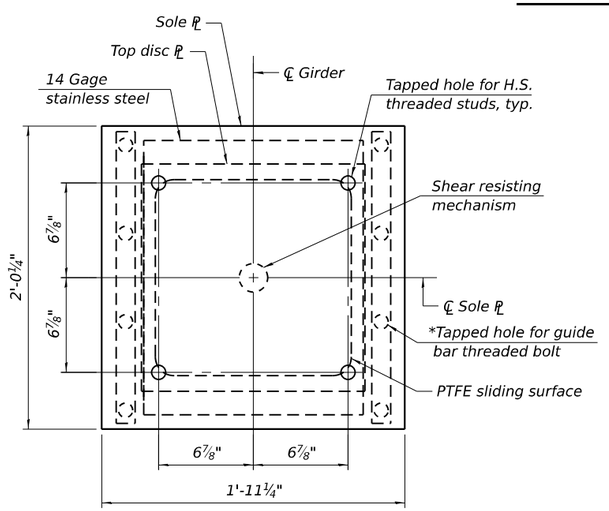

SOLE PLATE AND TOP DISC PLATE PLAN

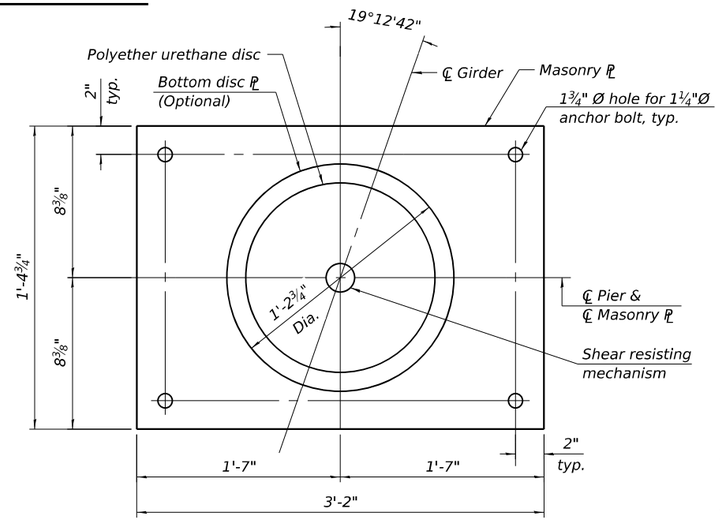

MASONRY PLATE AND BOTTOM DISC PLATE PLAN

GUIDED EXPANSION HLMR DISC BEARING AT PIER

(12 required)

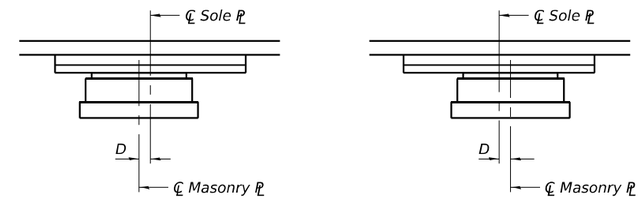

BELOW 50°F.
(Move masonry ℙ away from fixed bearing)

ABOVE 50°F.
(Move masonry ℙ toward fixed bearing)

SETTING ANCHOR BOLTS AT EXPANSION BEARING

D=⅛" per each 100' of expansion for every 15° temp. change from the normal temp. of 50° F.

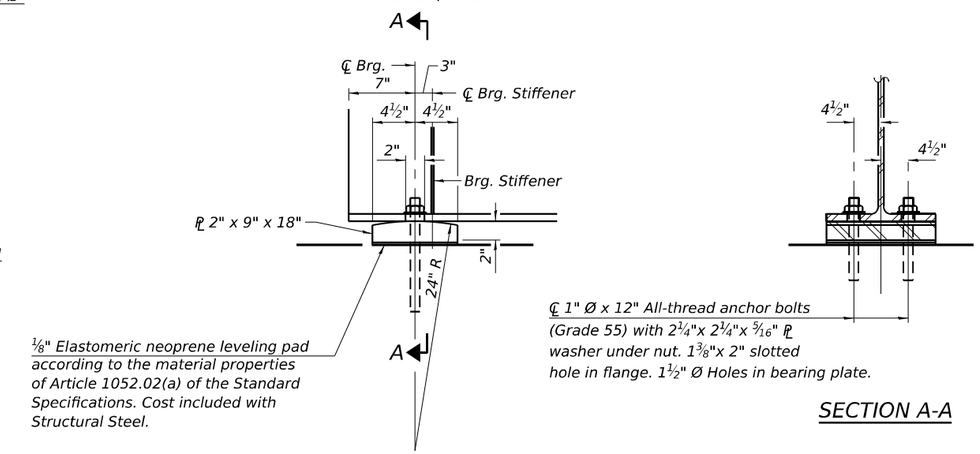

ELEVATION AT ABUTMENT

SECTION A-A

FIXED BEARING AT ABUTMENTS

(25 required)

NOTES:

1. Two ⅛ in. adjusting shims shall be provided for each bearing in addition to all other fill plates or shims and placed as shown on bearing details. Fill Plates and Shim plates not included in total bearing height. Cost included with bearing pay item.
2. Total bearing height is estimated based on manufacturer data. Actual bearing height may differ from contract plans. The Contractor shall be responsible for verifying bearing heights and adjusting seat elevations, if required, prior to placing pier or abutment concrete.
3. Anchor bolts at all supports shall be installed as each member is erected unless an equivalent temporary means of lateral restraint is used.
4. The structural steel plates of the Bearing Assembly shall conform to the requirements of AASHTO M270 Grade 50.
5. All (embedded and separate) bearing plates, side retainers, anchor bolts, nuts, washers and pintles shall be galvanized according to AASHTO M111 or M232 as applicable.

BILL OF MATERIAL

	Item	Unit	Total
**	High Load Multi-Rotational Bearings, Disc, Guided Expansion-500K	Each	12
	Anchor Bolts, 1¼"	Each	48
	Anchor Bolts, 1"	Each	50

** The value specified in the pay item name is an approximate vertical load capacity that is used for letting and bidding purposes only. Exact bearing capacity will vary subject to final design.

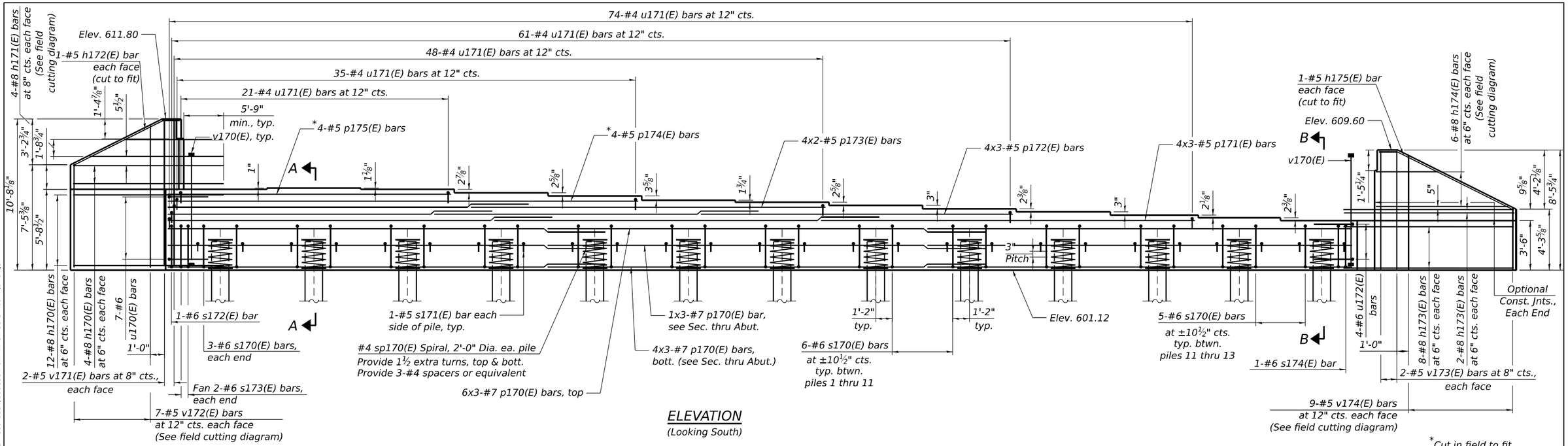

TOP OF SEAT ELEVATIONS

Girder No.	Elev.
1	606.83
2	606.91
3	606.82
4	606.58
5	606.36
6	606.05
7	605.91
8	605.69
9	605.44
10	605.24
11	605.00
12	604.82
13	604.62

NOTES:

1. Bars noted thus 4x2-#7, incdicates 4 lines of #7 bars with 2 lengths per line.
2. For suggested South Abutment Construction Sequence, see Sheet SB-37.
3. For additional Notes, Sections Thru Abutment, Anchor Bolt Location Detail, bar diagrams, and Bill of Material, see Sheet SB-37.

MINIMUM BAR LAPS

#8 bar = 5'-9"
#7 bar = 5'-0"
#5 bar = 3'-7"

PILE DATA

Type: HP14x117 with pile shoes
Nominal Required Bearing: 929 Kips
Factored Resistance Available: 511 Kips
Est. Length: 38 Feet (Abutment)
No. Production Piles: 12
No. Test Piles: 1

HBM ENGINEERING GROUP, LLC

USER NAME =	DESIGNED - IAL, EN	REVISED -
	CHECKED - MI, JJS	REVISED -
PLOT SCALE =	DRAWN - EN	REVISED -
PLOT DATE =	CHECKED - MI, JJS	REVISED -

STATE OF ILLINOIS
DEPARTMENT OF TRANSPORTATION

SOUTH ABUTMENT PLAN AND ELEVATION
STRUCTURE NO. 099-8332

SHEET SB-36 OF SB-48 SHEETS

F.A.I. RTE.	SECTION	COUNTY	TOTAL SHEETS	SHEET NO.
80	FAI 80 21 INTERCHANGE	WILL	1209	691

CONTRACT NO. 62R22
ILLINOIS FED. AID PROJECT

MODEL: Default
FILE NAME: pw://transystems-pw.bentley.com:transyscorp-pw1-hosted/Documents/Projects_2018/CH-401/401180022/03-WSP/CAD/62R22-INT-4 (Center)/Sheets/Structural/SN-099-8332/0998332-62R22-SB-35-S.Abut.Plan&Elev.
4/22/2025 4:04:54 PM

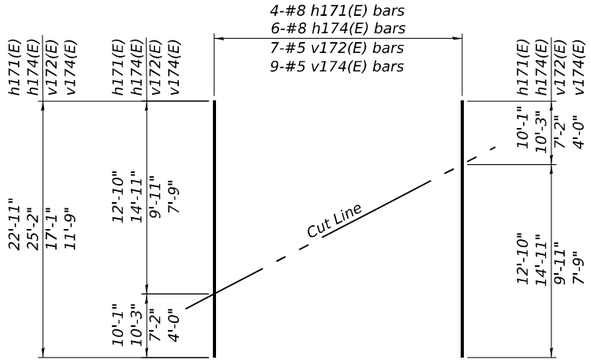

FIELD CUTTING DIAGRAM

Order h171(E), h174(E), v172(E) and v174(E) full length. Cut as shown and use remainder of bars in the opposite face.

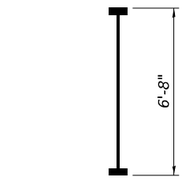

BAR v170(E)

(Headed. 422-#8 Bar terminators)

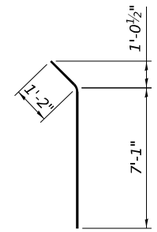

BAR h172(E)

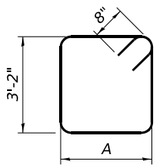

BAR s170(E), s172(E) AND s174(E)

Bar	A
s170(E)	3'-4"
s172(E)	3'-8"
s174(E)	3'-10"

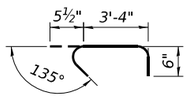

BAR s171(E)

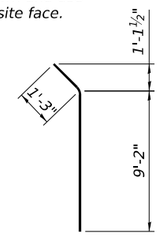

BAR h175(E)

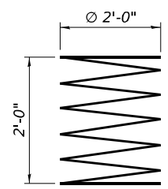

BAR sp170(E)

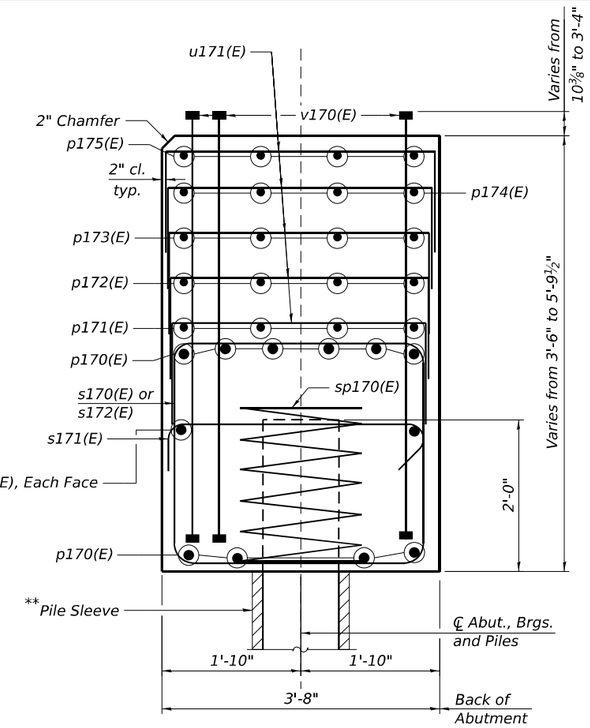

SECTION A-A

Dimensions at right angles to abutment

BILL OF MATERIAL

Bar	No.	Size	Length	Shape
h170(E)	23	#8	13'-9"	
h171(E)	4	#8	22'-11"	
h172(E)	2	#5	8'-3"	
h173(E)	20	#8	15'-7"	
h174(E)	6	#8	25'-2"	
h175(E)	2	#5	10'-5"	
p170(E)	33	#7	31'-5"	
p171(E)	12	#5	26'-7"	
p172(E)	12	#5	22'-4"	
p173(E)	8	#5	25'-1"	
p174(E)	4	#5	33'-3"	
p175(E)	4	#5	20'-1"	
s170(E)	76	#6	14'-4"	
s171(E)	26	#5	4'-4"	
s172(E)	1	#6	15'-0"	
s173(E)	4	#6	8'-2"	
s174(E)	1	#6	15'-4"	
* sp170(E)	13	#4	2'-0"	
u170(E)	7	#6	12'-1"	
u171(E)	239	#4	5'-4"	
u172(E)	4	#6	12'-3"	
v170(E)	211	#8	6'-8"	
v171(E)	4	#5	10'-4"	
v172(E)	7	#5	17'-1"	
v173(E)	4	#5	8'-2"	
v174(E)	9	#5	11'-9"	
Structure Excavation			Cu Yd	205
Concrete Structures			Cu Yd	60.0
Reinforcement Bars, Epoxy Coated			Pound	12,520
Furnishing Steel Piles HP14X117			Foot	456
Driving Piles			Foot	456
Test Pile Steel HP14X117			Each	1
Pile Shoes			Each	13
Granular Backfill For Structures			Cu Yd	198
Geocomposite Wall Drain			Sq Yd	99
Pipe Underdrains For Structures 4"			Foot	107

* Length is height of spiral

** Only piles within Retaining Wall #6 (SN 099-W122) MSE reinforced soil mass are required to have pile sleeves. All pile sleeves shall extend to the top of leveling pad elevation and be backfilled with bentonite to the bottom of South Abutment

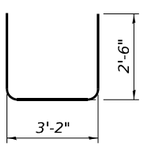

BAR s173(E)

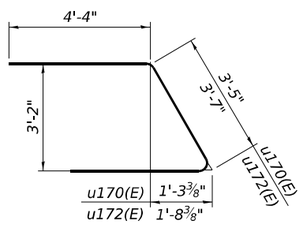

BARS u170(E) AND u172(E)

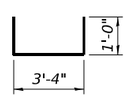

BAR u171(E)

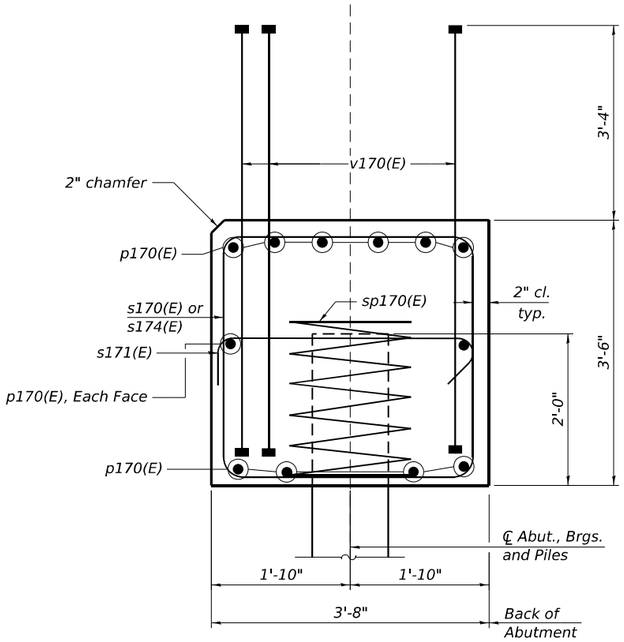

SECTION B-B

Dimensions at right angles to abutment

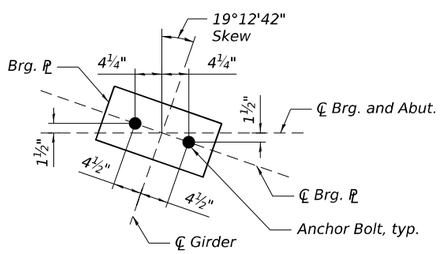

ANCHOR BOLT LOCATION DETAIL

NOTES:

1. Space reinforcement in cap to miss anchor bolts.
2. Pour steps monolithically with cap.
3. For Diaphragm Details, see Sheet SB-18.
4. For details of piles, see Sheet SB-44.
5. Bar terminators paid for separately. See Total Bill of Material.

SUGGESTED SOUTH ABUTMENT CONSTRUSTION SEQUENCE:

1. Backfill to the theoretical top of leveling pad elevation of Retaining Wall #6 (SN 099-W122).
2. Drive South Abutment and South Approach Bent piles located within the Retaining Wall #6 (SN 099-W122) MSE reinforced soil mass.
3. Place pile sleeves around South Abutment and South Appraoch Bent piles located within the Retaining Wall #6 (SN 099-W122) MSE reinforced soil mass.
4. Construct Retaining Wall #6 (SN 099-W122) MSE wall and backfill embankment to the bottoms of South Abutment and South Appraoch Bent.
5. Fill pile sleeves with bentonite to the Bottom of South Abutment and Bottom of South Approach Bent Elevations.
6. Drive remaining South Abutment and South Approach Bent piles and complete construction of these elements.

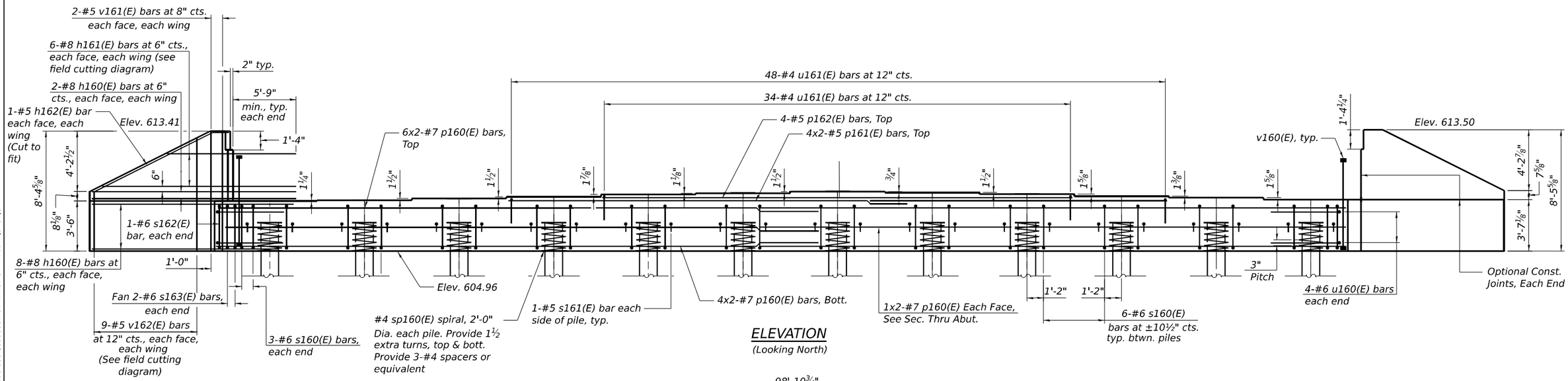

ELEVATION

(Looking North)

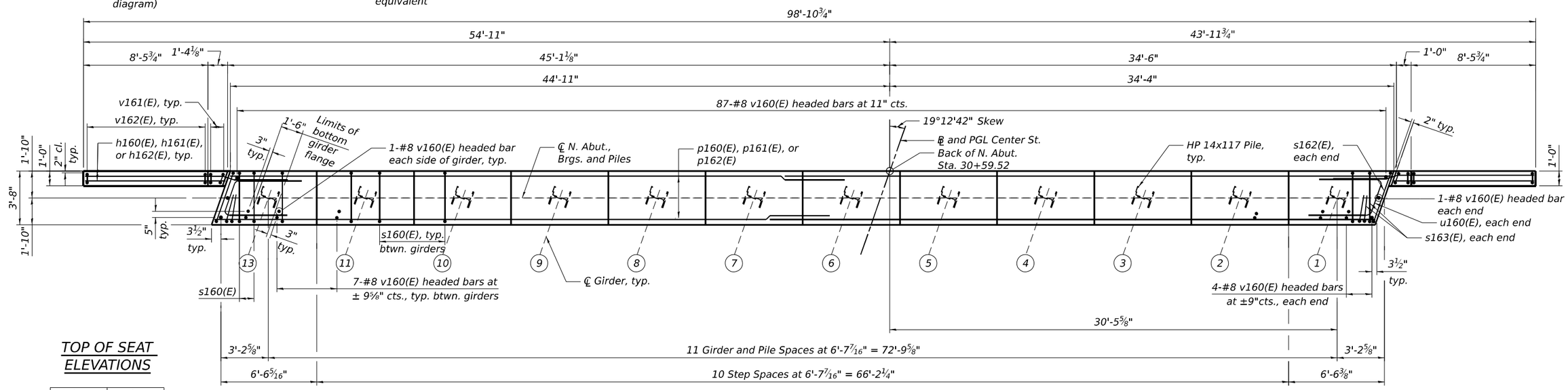

PLAN

TOP OF SEAT ELEVATIONS

Girder No.	Elev.
1	608.58
2	608.72
3	608.85
4	608.97
5	609.11
6	609.17
7	609.05
8	608.93
9	608.80
10	608.70
11	608.56
12	-
13	608.46

NOTES:

1. Bars noted thus, 4x2-#7, indicates 4 lines of #7 bars with 2 lengths per line.
2. For Notes, Section thru Abutment, Anchor Bolt Location Detail, Bar Diagrams and Bill of Material, see Sheet SB-39.

N

MINIMUM BAR LAPS

#8 bar = 5'-9"
#7 bar = 5'-0"
#5 bar = 3'-7"

PILE DATA

Type: HP14x117 with pile shoes
Nominal Required Bearing: 929 Kips
Factored Resistance Available: 456 Kips
Est. Length: 24 Feet
No. Production Piles: 11
No. Test Piles: 1

HBM ENGINEERING GROUP, LLC

USER NAME =	DESIGNED - IAL, JMI	REVISED -
	CHECKED - MI, JJS	REVISED -
PLOT SCALE =	DRAWN - JMI	REVISED -
PLOT DATE =	CHECKED - MI, JJS	REVISED -

STATE OF ILLINOIS
DEPARTMENT OF TRANSPORTATION

NORTH ABUTMENT PLAN AND ELEVATION
STRUCTURE NO. 099-8332

SHEET SB-38 OF SB-48 SHEETS

F.A.I. RTE.	SECTION	COUNTY	TOTAL SHEETS	SHEET NO.
80	FAI 80 21 INTERCHANGE	WILL	1209	693

CONTRACT NO. 62R22

ILLINOIS FED. AID PROJECT

MODEL: Default
FILE NAME: pw://transystems-pw.bentley.com:transyscorp-pw1-hosted/Documents/Projects_2018/CH401/401180022/03-WSP/CAD/62R22-INT-4 (Center)/Sheets/Structural/SN-099-8332/0998332-62R22-SB-37-Abut.Plan&Elev.

4/22/2025 4:04:59 PM

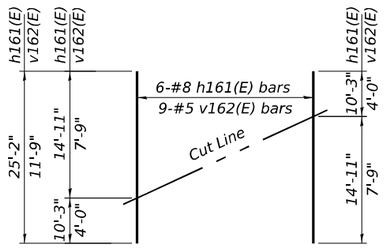

FIELD CUTTING DIAGRAM

(Order h161(E) and v162(E) full length. Cut as shown and use remainder of bars in opposite face)

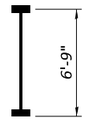

BAR v160(E)

(Headed 396-#8 Bar terminators)

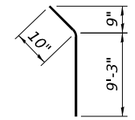

BAR h162(E)

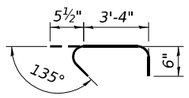

BAR s161(E)

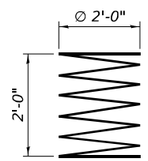

BAR sp160(E)

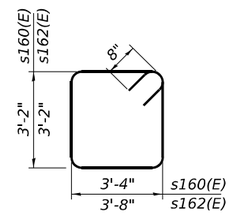

BAR s160(E) & s162(E)

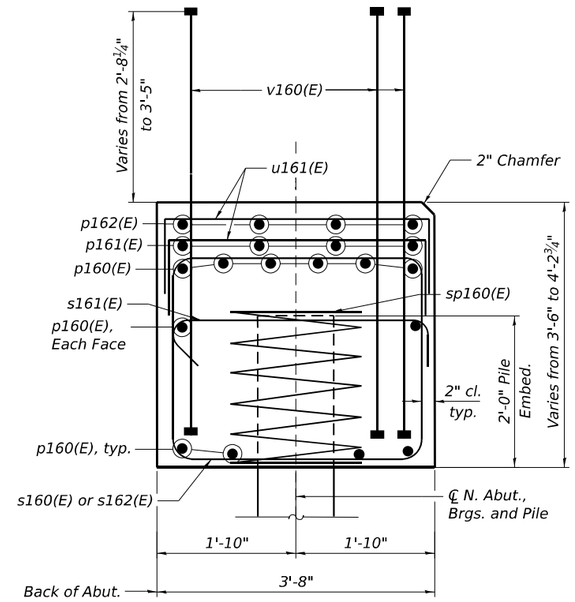

SEC. THRU ABUT.

Dimensions at right angles to abutment

BILL OF MATERIAL

Bar	No.	Size	Length	Shape
h160(E)	40	#8	15'-7"	
h161(E)	12	#8	25'-2"	
h162(E)	4	#5	10'-1"	
p160(E)	22	#7	42'-0"	
p161(E)	8	#5	24'-10"	
p162(E)	4	#5	32'-9"	
s160(E)	72	#6	14'-4"	
s161(E)	24	#5	4'-4"	
s162(E)	2	#6	15'-0"	
s163(E)	4	#6	8'-2"	
* sp160(E)	12	#4	2'-0"	
u160(E)	8	#6	12'-1"	
u161(E)	82	#4	5'-4"	
v160(E)	198	#8	6'-9"	
v161(E)	8	#5	8'-2"	
v162(E)	18	#5	11'-9"	
Structure Excavation			Cu Yd	167
Concrete Structures			Cu Yd	46.3
Reinforcement Bars, Epoxy Coated			Pound	10,810
Furnishing Steel Piles HP14X117			Each	264
Driving Piles			Foot	264
Test Pile Steel HP14X117			Each	1
Pile Shoes			Each	12
Granular Backfill For Structures			Cu Yd	168
Geocomposite Wall Drain			Sq Yd	82
Pipe Underdrains For Structures 4"			Foot	103

*Length is height of spiral

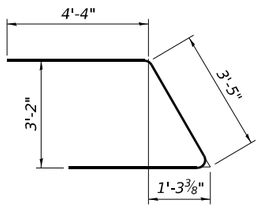

BAR u160(E)

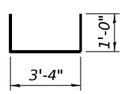

BAR u161(E)

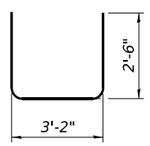

BAR s163(E)

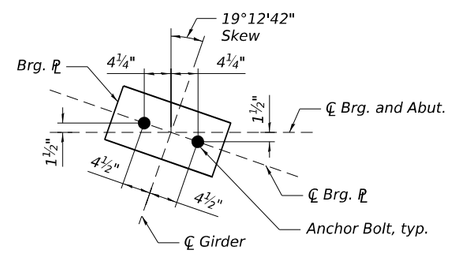

ANCHOR BOLT LOCATION DETAIL

NOTES:

1. Space reinforcement in cap to miss anchor bolts.
2. Pour steps monolithically with cap.
3. For diaphragm details, see Sheet SB-19.
4. For details of piles, see Sheet SB-44.
5. Bar terminators paid for separately. See Total Bill of Material.

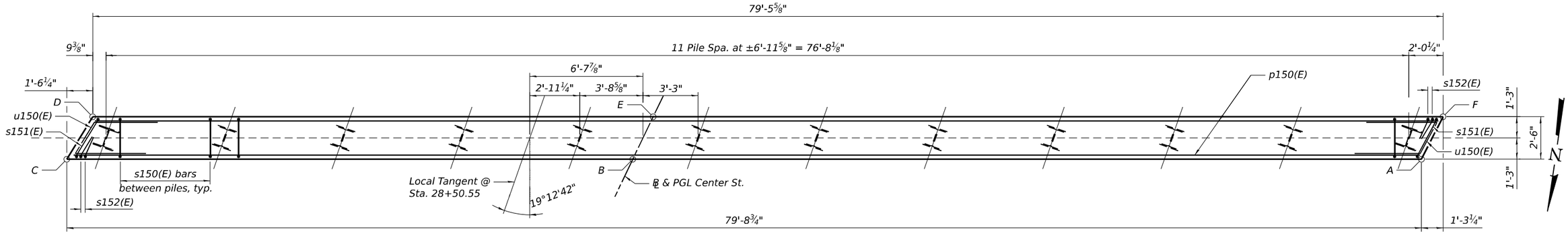

SOUTH APPROACH BENT PLAN

(p151(E) thru p154(E) bars not shown for clarity)

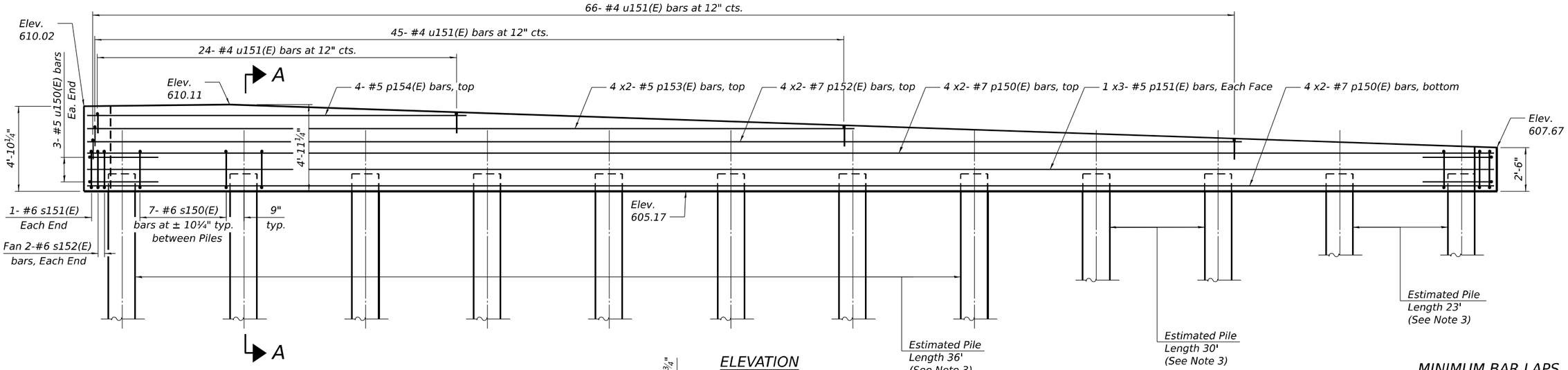

ELEVATION

(Looking South)

TOP AND BOTTOM ELEVATIONS FOR SOUTH APPROACH PILE BENT

South Approach		
Location	Top	Bottom
A-NW	607.71	605.17
B-N. CL	609.28	605.17
C-NE	610.06	605.17
D-SE	610.02	605.17
E-S. CL	609.24	605.17
F-SW	607.67	605.17

NOTES:

1. Bars indicated thus 4 x 3 -#7 etc. indicates 4 lines of #7 bars with 3 lengths per line.
2. For Suggested Construction Sequence, see sheet SB-37.
3. The proposed layout of the South Approach Bent is positioned above the existing ground surface and the existing Center Ramp AD, which is embedded in excavated bedrock. Due to these conditions, the estimated pile lengths for the South Approach Bent may vary. This variability should be considered during construction planning and pile driving.

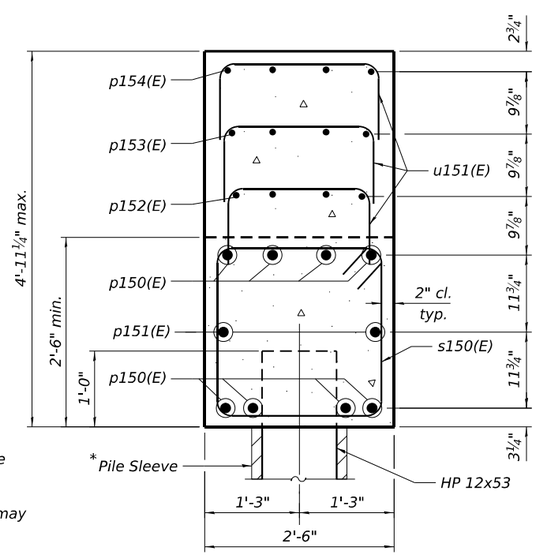

SECTION A-A

* Only piles within Retaining Wall #6 (SN 099-W122) MSE reinforced soil mass are required to have pile sleeves. All pile sleeves shall extend to the top of leveling pad elevation and be backfilled with bentonite to the bottom of South Approach Bent

PILE DATA

Type: HP 12X53 w/ Pile Shoes
Nominal Required Bearing: 418 kips
Factored Resistance Available: 230 kips
Est. Length: 23'-0", 30'-0", 36'-0"
No. Production Piles: 11
No. Test Piles: 1

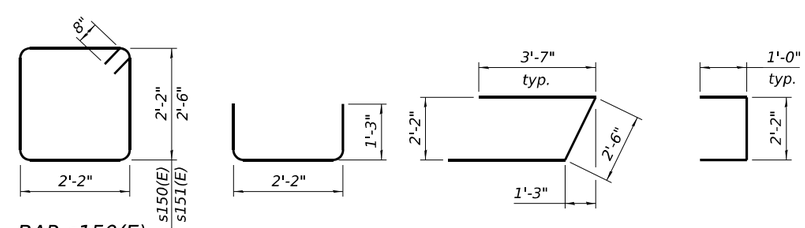

BAR s150(E) & s151(E) | BAR s152(E) | BAR u150(E) | BAR u151(E)

MINIMUM BAR LAPS

#7 Bar = 5'-0"
#5 Bar = 3'-7"

BILL OF MATERIAL

Bar	No.	Size	Length	Shape
s150(E)	77	#6	10'-0"	
s151(E)	2	#6	10'-8"	
s152(E)	4	#6	4'-8"	
u150(E)	6	#5	9'-8"	
u151(E)	135	#4	4'-2"	
p150(E)	16	#7	42'-2"	
p151(E)	6	#5	28'-10"	
p152(E)	12	#5	23'-4"	
p153(E)	8	#5	22'-9"	
p154(E)	4	#5	22'-3"	
Structure Excavation		Cu Yd	126	
Concrete Structures		Cu Yd	28.0	
Reinforcement Bars, Epoxy Coated		Pound	3,790	
Furnishing Steel Piles HP12X53		Foot	358	
Driving Piles		Foot	358	
Test Pile Steel HP12X53		Each	1	
Pile Shoes		Each	12	

HBM ENGINEERING GROUP, LLC

USER NAME =	DESIGNED - PG, EN	REVISED -
	CHECKED - MI, JJS	REVISED -
PLOT SCALE =	DRAWN - PG, EN	REVISED -
PLOT DATE =	CHECKED - MI, JJS	REVISED -

STATE OF ILLINOIS
DEPARTMENT OF TRANSPORTATION

SOUTH APPROACH BENT DETAILS
STRUCTURE NO. 099-8332

SHEET SB-40 OF SB-48 SHEETS

F.A.I. RTE.	SECTION	COUNTY	TOTAL SHEETS	SHEET NO.
80	FAI 80 21 INTERCHANGE	WILL	1209	695

CONTRACT NO. 62R22
ILLINOIS | FED. AID PROJECT

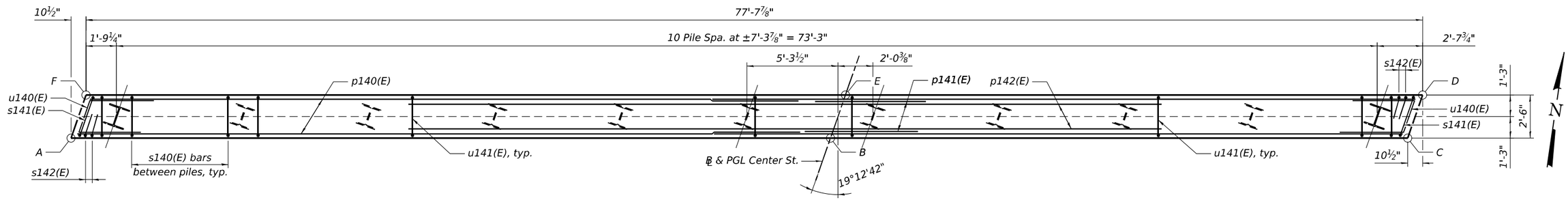

NORTH APPROACH BENT PLAN

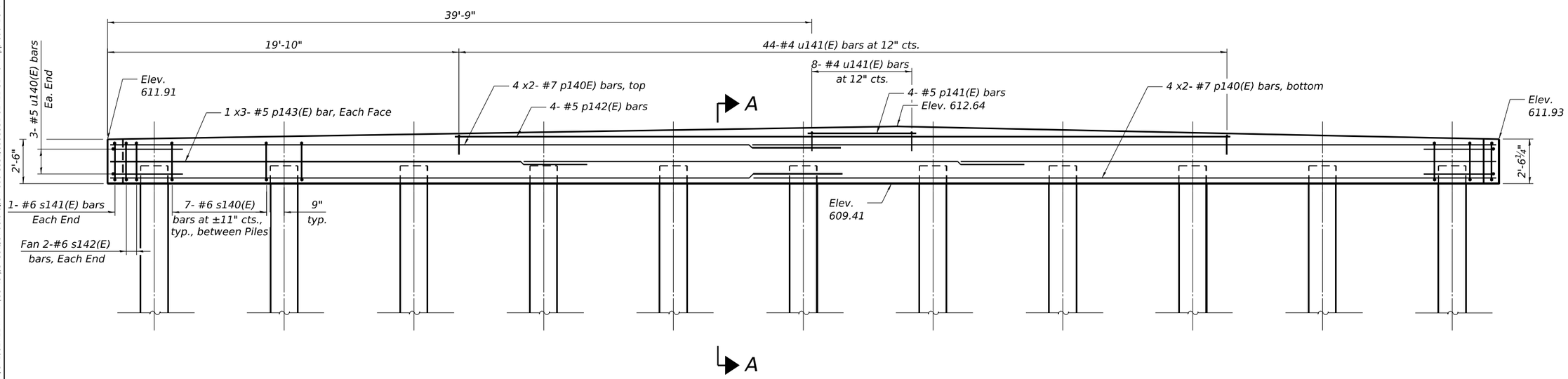

ELEVATION

(Looking North)

TOP AND BOTTOM ELEVATIONS FOR NORTH APPROACH PILE BENT

North Approach		
Location	Top	Bottom
A-SW	611.93	609.41
B-S. CL	612.66	609.41
C-SE	611.95	609.41
D-NE	611.93	609.41
E-N. CL	612.64	609.41
F-NW	611.91	609.41

NOTE:

1. Bars indicated thus 4 x 3 -#7 etc. indicates 4 lines of #7 bars with 3 lengths per line.

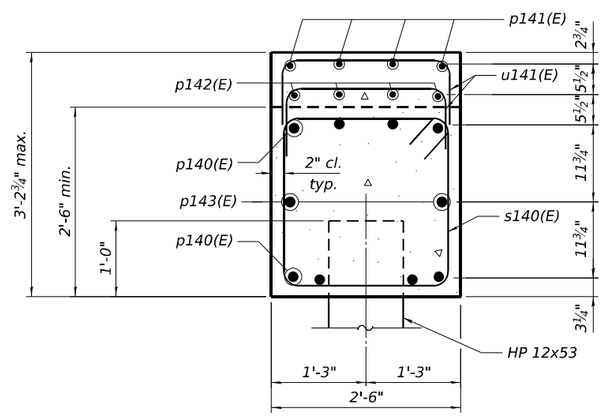

SECTION A-A

MINIMUM BAR LAPS

#7 Bar = 5'-0"
#5 Bar = 3'-7"

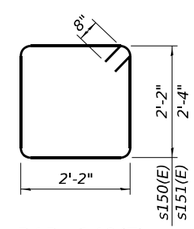

BAR s140(E) & s141(E)

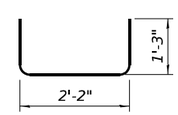

BAR s142(E)

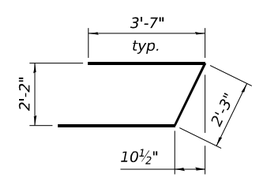

BAR u140(E)

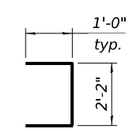

BAR u141(E)

PILE DATA

Type: HP 12X53 w/ Pile Shoes
Nominal Required Bearing: 418 kips
Factored Resistance Available: 134 kips
Est. Length: 25'-0"
No. Production Piles: 10
No. Test Piles: 1

NORTH APPROACH BENT BILL OF MATERIAL

Bar	No.	Size	Length	Shape
p140(E)	16	#7	41'-3"	
p141(E)	4	#5	6'-1"	
p142(E)	4	#5	42'-6"	
p143(E)	6	#5	28'-3"	
u140(E)	6	#5	9'-6"	
u141(E)	52	#4	4'-2"	
s140(E)	70	#6	10'-0"	
s141(E)	2	#6	10'-4"	
s142(E)	4	#6	4'-8"	
Structure Excavation			Cu Yd	78
Concrete Structures			Cu Yd	20.6
Reinforcement Bars, Epoxy Coated			Pound	3,050
Furnishing Steel Piles HP12X53			Foot	250
Driving Piles			Foot	250
Test Pile Steel HP12X53			Each	1
Pile Shoes			Each	11

TOP OF SEAT ELEVATIONS

Girder No.	Elev.
1	607.49
2	607.59
3	607.53
4	607.44
5	607.37
6	607.28
7	607.12
8	606.97
9	606.79
10	606.64
11	606.49
12	-
13	606.34

MIN. LAP LENGTH

#5 bar = 3'-7"
#6 bar = 3'-3" (Stirrups)
#6 bar = 4'-4"
#8 bar = 7'-2"
#10 bar = 11'-6"

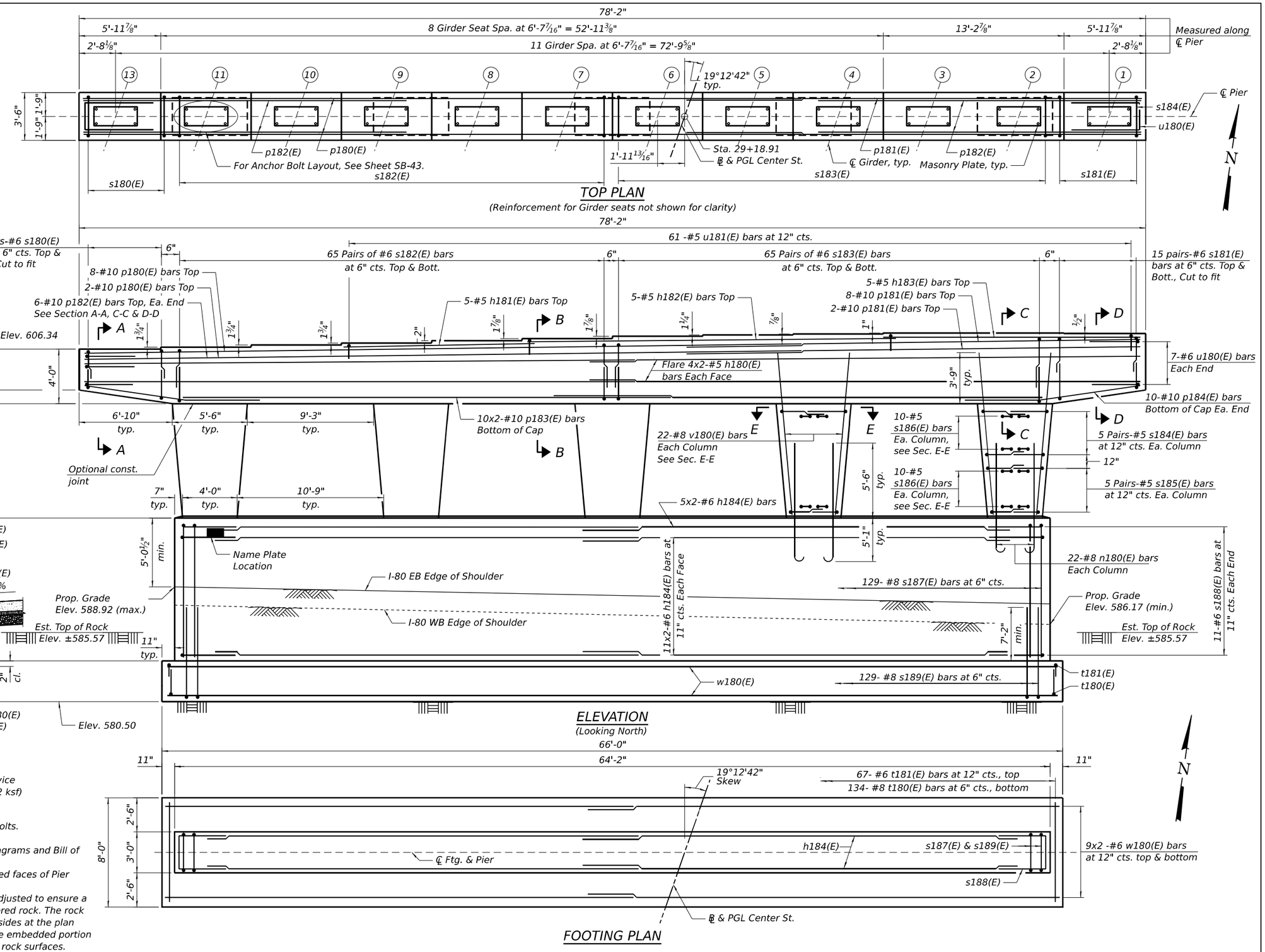

NOTES:

1. Space reinforcement in cap to miss anchor bolts.
2. Pour steps monolithically with cap.
3. For Sections A-A, B-B, C-C, D-D & E-E, bar diagrams and Bill of Material, see Sheet SB-43.
4. Concrete Sealer shall be applied to all exposed faces of Pier above grade.
5. The bottom of footing elevation(s) shall be adjusted to ensure a minimum embedment of 5'-1" in non-weathered rock. The rock excavation shall be made with near-vertical sides at the plan dimensions to allow the sides and base of the embedded portion of the footing to be cast against undisturbed rock surfaces.

HBM ENGINEERING GROUP, LLC

USER NAME =	DESIGNED - PG, ANS	REVISED -	
	CHECKED - MI, JJS	REVISED -	
PLOT SCALE =	DRAWN - PG	REVISED -	
PLOT DATE =	CHECKED - MI, JJS	REVISED -	

STATE OF ILLINOIS
DEPARTMENT OF TRANSPORTATION

PIER PLAN AND ELEVATION
STRUCTURE NO. 099-8332

SHEET SB-42 OF SB-48 SHEETS

F.A.I. RTE.	SECTION	COUNTY	TOTAL SHEETS	SHEET NO.
80	FAI 80 21 INTERCHANGE	WILL	1209	697
		CONTRACT NO. 62R22		
	ILLINOIS	FED. AID PROJECT		

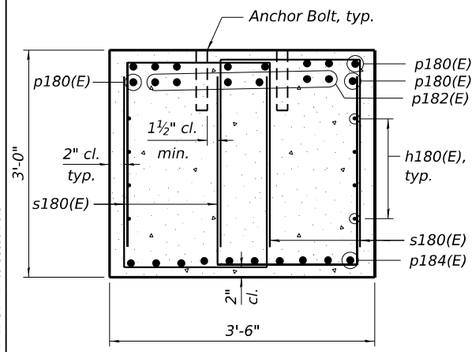

SECTION A-A

(At West end of cap)

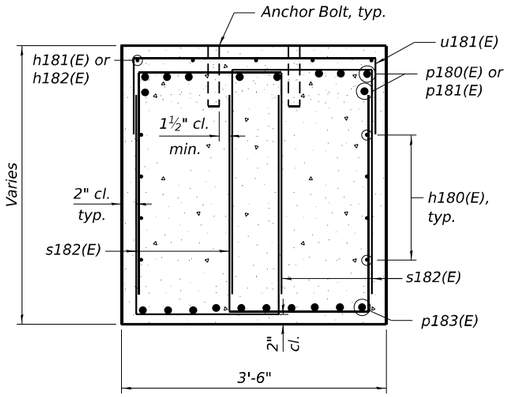

SECTION B-B

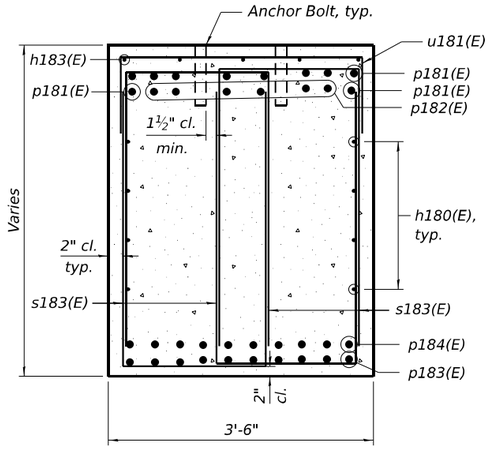

SECTION C-C

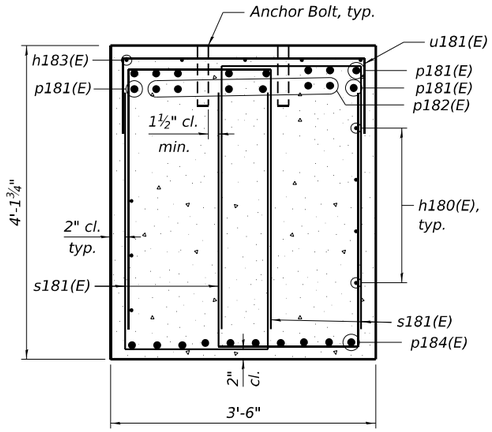

SECTION D-D

(At East end of cap)

BILL OF MATERIAL

Bar	No.	Size	Length	Shape
h180(E)	16	#5	40'-9"	
h181(E)	5	#5	14'-0"	
h182(E)	5	#5	27'-0"	
h183(E)	5	#5	19'-0"	
h184(E)	54	#6	35'-0"	
n180(E)	110	#8	11'-7"	
p180(E)	10	#10	52'-0"	
p181(E)	10	#10	38'-0"	
p182(E)	12	#10	23'-8"	
p183(E)	20	#10	37'-10"	
p184(E)	20	#10	18'-3"	
* s180(E)	60	#6	8'-11"	
* s181(E)	60	#6	10'-1"	
s182(E)	260	#6	9'-7"	
s183(E)	260	#6	11'-1"	
s184(E)	50	#5	11'-5"	
s185(E)	50	#5	9'-9"	
s186(E)	100	#5	3'-10"	
s187(E)	129	#8	22'-10"	
s188(E)	22	#6	11'-4"	
s189(E)	129	#8	22'-6"	
t180(E)	134	#8	12'-8"	
t181(E)	67	#6	9'-4"	
u180(E)	14	#6	11'-10"	
u181(E)	61	#5	5'-2"	
v180(E)	110	#8	12'-1"	
w180(E)	36	#6	35'-0"	
Structure Excavation		Cu Yd	217	
Rock Excavation For Structures		Cu Yd	124	
Concrete Structures		Cu Yd	200.0	
Reinforcement Bars, Epoxy Coated		Pound	55,930	
Concrete Sealer		Sq Ft	2,817	

* Cut in field to fit

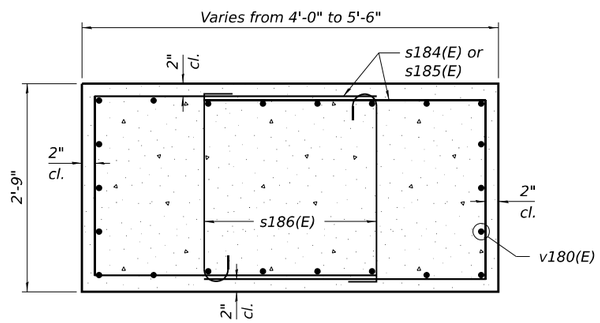

SECTION E-E

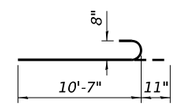

BAR n180(E)

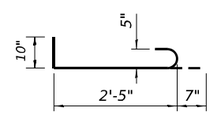

BAR s186(E)

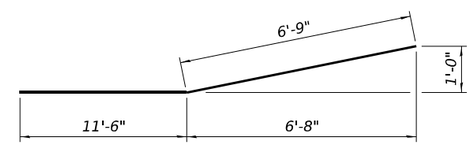

BAR p181(E)

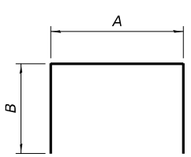

BARS

(See Table)

A & B DIMENSIONS

Bar	A	B
u180(E)	3'-2"	4'-4"
u181(E)	3'-2"	1'-0"
* s180(E)	1'-11"	3'-6"
* s181(E)	1'-11"	4'-1"
s182(E)	1'-11"	3'-10"
s183(E)	1'-11"	4'-7"
s184(E)	2'-5"	4'-6"
s185(E)	2'-5"	3'-8"
s187(E)	2'-8"	10'-1"
s188(E)	2'-8"	4'-4"
s189(E)	2'-8"	9'-11"
t180(E)	7'-8"	2'-6"
t181(E)	7'-8"	10"

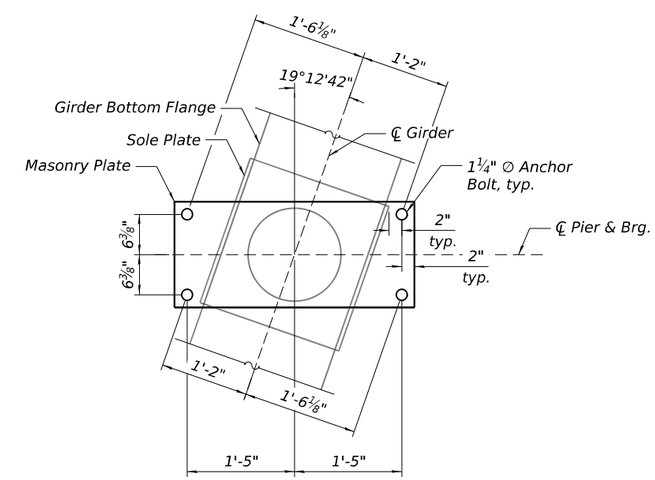

ANCHOR BOLT LAYOUT

HBM ENGINEERING GROUP, LLC	USER NAME =	DESIGNED - PG, ANS	REVISED -
		CHECKED - MI, JJS	REVISED -
	PLOT SCALE =	DRAWN - PG	REVISED -
	PLOT DATE =	CHECKED - MI, JJS	REVISED -

STATE OF ILLINOIS
DEPARTMENT OF TRANSPORTATION

PIER SECTIONS AND DETAILS
STRUCTURE NO. 099-8332

SHEET SB-43 OF SB-48 SHEETS

F.A.I. RTE.	SECTION	COUNTY	TOTAL SHEETS	SHEET NO.
80	FAI 80 21 INTERCHANGE	WILL	1209	698
		CONTRACT NO. 62R22		
	ILLINOIS	FED. AID PROJECT		

MODEL: Default
FILE NAME: pw://transystem-pw.bentley.com:transyscorp-pw1-hosted/Documents/Projects_2018/CH401/401180022/03-WSP/CAD/62R22-INT-4 (Center)/Sheets/Structural/SN-099-8332/0998332-62R22-SB-42-PierSecs&Dets

6/9/2025 12:31:06 PM

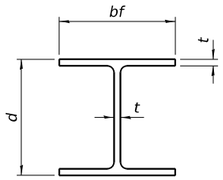

STEEL PILE TABLE

Designation	Depth d	Flange width bf	Web and Flange thickness t	Encasement diameter A
HP 18x181	18	18	1	36"
x157	17¾"	17⅞"	⅞"	36"
x135	17½"	17¾"	¾"	36"
HP 16x183	16½"	16½"	1⅛"	36"
x162	16¼"	16⅛"	1"	36"
x141	16	16	⅞"	36"
x121	15¾"	15⅞"	¾"	36"
HP 14x117	14¼"	14⅞"	13/16"	30"
x102	14"	14¾"	11/16"	30"
x89	13⅞"	14¾"	⅝"	30"
x73	13⅝"	14⅝"	½"	30"
HP 12x84	12¼"	12¼"	11/16"	24"
x74	12⅛"	12¼"	⅝"	24"
x63	12"	12⅛"	½"	24"
x53	11¾"	12"	7/16"	24"
HP 10x57	10"	10¼"	9/16"	24"
x42	9¾"	10⅛"	7/16"	24"
HP 8x36	8"	8⅛"	7/16"	18"

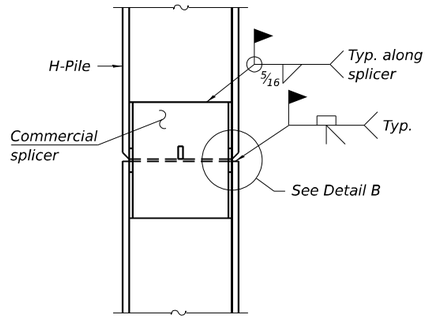

ELEVATION

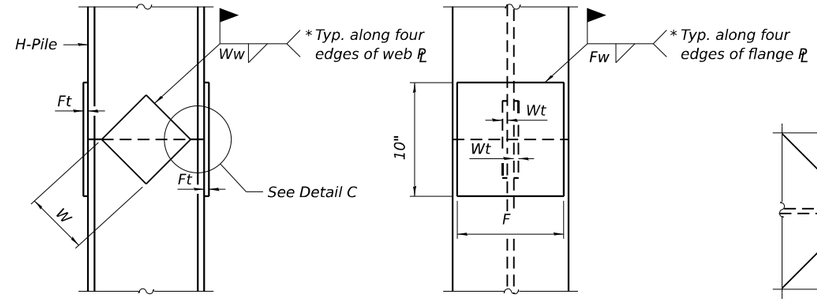

ELEVATION

END VIEW

DETAIL C

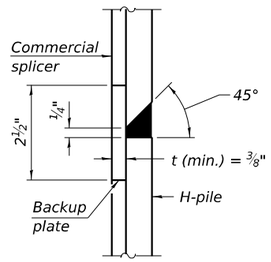

DETAIL B

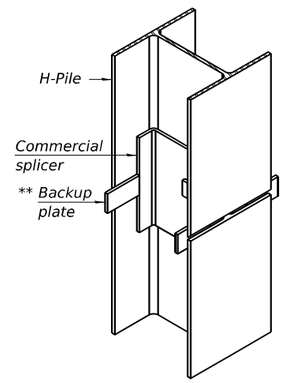

ISOMETRIC VIEW

WELDED COMMERCIAL SPLICE

Designation	F	Ft	Fw	W	Wt	Ww
HP 18x181	15½"	1½"	1"	9½"	⅞"	¾"
x157	15¼"	1¼"	1"	9½"	⅞"	¾"
x135	15¼"	1¼"	1"	9½"	⅞"	¾"
HP 16x183	13¾"	1½"	1"	8¼"	⅞"	¾"
x162	13½"	1½"	1"	8¼"	¾"	⅝"
x141	13½"	1¼"	⅞"	8¼"	¾"	⅝"
x121	13½"	1¼"	⅞"	8¼"	¾"	⅝"
HP 14x117	12½"	1¼"	⅞"	7¾"	⅝"	½"
x102	12½"	1"	¾"	7¾"	⅝"	½"
x89	12½"	⅞"	11/16"	7¾"	⅝"	½"
x73	12½"	¾"	9/16"	7¾"	⅝"	½"
HP 12x84	10"	1"	11/16"	6½"	⅝"	½"
x74	10"	⅞"	11/16"	6½"	⅝"	½"
x63	10"	¾"	½"	6½"	½"	⅜"
x53	10"	¾"	½"	6½"	½"	⅜"
HP 10x57	8"	⅞"	9/16"	5¼"	½"	⅜"
x42	8"	¾"	9/16"	5¼"	½"	⅜"
HP 8x36	6¾"	⅝"	7/16"	4"	½"	⅜"

WELDED PLATE FIELD SPLICE

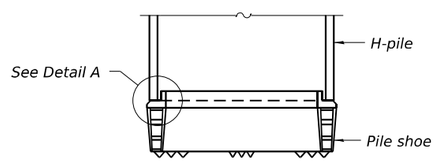

ELEVATION

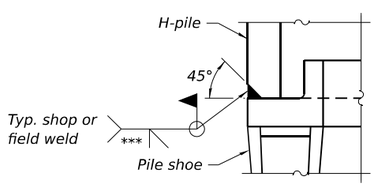

DETAIL A

SHOE ATTACHMENT

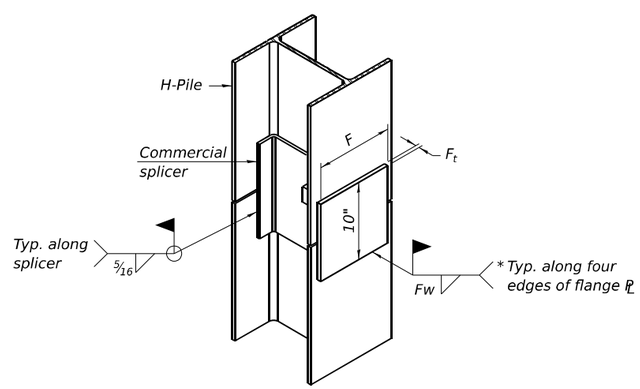

ISOMETRIC VIEW

WELDED COMMERCIAL SPLICE ALTERNATE

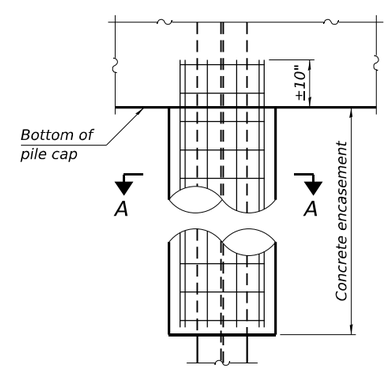

ELEVATION

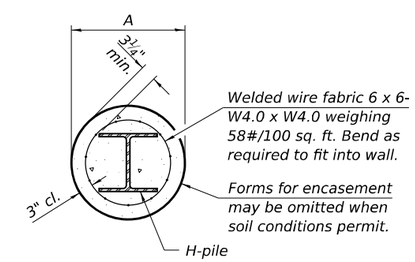

SECTION A-A

INDIVIDUAL PILE CONCRETE ENCASEMENT
(when specified)

Note:
The steel H-piles shall be according to AASHTO M270 Grade 50.

* Interrupt welds ¼" from end of web and/or each flange.

** Remove portions of backup plates that extend outside the flanges.

*** Weld size per pile shoe manufacturer (5/16" min.).

F-HP 10-27-2023

HBM ENGINEERING GROUP, LLC

USER NAME =	DESIGNED - PG	REVISED -
	CHECKED - MI	REVISED -
PLOT SCALE =	DRAWN - PG	REVISED -
PLOT DATE =	CHECKED - MI	REVISED -

STATE OF ILLINOIS
DEPARTMENT OF TRANSPORTATION

HP PILE DETAILS
STRUCTURE NO. 099-8332

SHEET SB-44 OF SB-48 SHEETS

F.A.I. RTE.	SECTION	COUNTY	TOTAL SHEETS	SHEET NO.
80	FAI 80 21 INTERCHANGE	WILL	1209	699

CONTRACT NO. 62R22
ILLINOIS FED. AID PROJECT

MODEL: Default
FILE NAME: pw://transystems-pw.bentley.com:transyscorp-pw1-hosted/Documents/Projects_2018/CH401/401180022/03-WSP/CAD/62R22-INT-4 (Center)/Sheets/Structural/SN-099-8332/0998332-62R22-SB-43-HP Pile Details
4/22/2025 4:05:17 PM

Illinois Department of Transportation
Division of Highways
GSG

SOIL BORING LOG

Page 1 of 1

Date 4/20/22

ROUTE I-80 DESCRIPTION I-80 at Center Street LOGGED BY DD

SECTION I-80 over Des Plaines River LOCATION , SEC. 16, TWP. 35 N, RNG. 10 E,
Latitude , Longitude

COUNTY Will DRILLING METHOD HSA

DRILLING RIG CME-75
HAMMER TYPE AUTO
HAMMER EFF (%) 91

STRUCT. NO. 099-8332
Station

BORING NO. BSB-65
Station 28+35.56'
Offset 126.55ft LT
Ground Surface Elev. 595.18 ft

Surface Water Elev. N/A ft
Stream Bed Elev. N/A ft

Groundwater Elev.:
First Encounter None ft
Upon Completion N/A ft
After ____ Hrs. N/A ft

Description	Elev.	DEPTH (ft)	BLOWS (/6")	UCS Qu (tsf)	MOIST (%)
10 inches of Asphalt	594.35				
Brown, Moist FILL: SILTY CLAY, trace sand and gravel			3 3 3	3.1 B	22
	592.18				
Very Stiff Brown, Moist SILTY CLAY LOAM, trace sand and gravel (ML/CL)		-5	4 5 6	3.1 B	15
	589.18				
Very Stiff Gray, Very Moist SILTY CLAY LOAM, trace sand and gravel (ML/CL)	588.18		3 5 50/2"	2.5 B	28
	587.68				
Very Dense Light Brown, Wet SAND, with gravel (SPG)					
Auger refusal at 7.5 feet Light Gray LIMESTONE, slightly weathered, heavily fractured Run 1: 7.5' - 17.5' Recovery: 100% RQD: 19.2% (Very Poor)		-10 -15			
Run 2: 17.5' - 23.5' Recovery: 100% RQD: 40.3% (Poor)		-20			
Light Gray LIMESTONE, slightly weathered, heavily fractured *(continued)*					
	571.68				
End of Boring		-25 -30 -35 -40			

The Unconfined Compressive Strength (UCS) Failure Mode is indicated by (B-Bulge, S-Shear, P-Penetrometer)
The SPT (N value) is the sum of the last two blow values in each sampling zone (AASHTO T206)

BBS, form 137 (Rev. 8-99)

NOTE:

1. The location of Boring Log BSB-65 is at Sta. 30+72.50 (Center St.) Offset 39.35' Rt. Elev. 595.18

Illinois Department of Transportation
Division of Highways
GSG

SOIL BORING LOG

Page 1 of 1

Date 4/26/22

ROUTE I-80 DESCRIPTION I-80 at Center Street LOGGED BY DM

SECTION I-80 over Des Plaines River LOCATION , SEC. 16, TWP. 35 N, RNG. 10 E,
Latitude , Longitude

COUNTY Will DRILLING METHOD HSA

DRILLING RIG CME-75
HAMMER TYPE AUTO
HAMMER EFF (%) 91

STRUCT. NO. 099-8332
Station

BORING NO. BSB-66
Station 27+10.93'
Offset 15.08ft RT
Ground Surface Elev. 593.57 ft

Surface Water Elev. N/A ft
Stream Bed Elev. N/A ft

Groundwater Elev.:
First Encounter None ft
Upon Completion N/A ft
After ____ Hrs. N/A ft

Description	Elev.	DEPTH (ft)	BLOWS (/6")	UCS Qu (tsf)	MOIST (%)
12 inches of Asphalt	592.57				
Brown, Moist FILL: SILTY CLAY, trace sand and gravel			14 4 6	4.5 P	12
	590.57				
Very Stiff Dark Brown, Moist SILTY CLAY, trace sand and gravel (CL/ML)	589.07	-5	5 11 12	2.8 P	22
Medium Dense Brown, Dry SANDY GRAVEL, with limestone fragments (GPS)	587.07		6		
Stiff Dark Brown, Dry SILTY CLAY, with sand and gravel (CL/ML)	585.57		8 9	1.8 P	3
Auger refusal at 8.0 feet End of Boring		-10 -15 -20			

The Unconfined Compressive Strength (UCS) Failure Mode is indicated by (B-Bulge, S-Shear, P-Penetrometer)
The SPT (N value) is the sum of the last two blow values in each sampling zone (AASHTO T206)

BBS, form 137 (Rev. 8-99)

NOTE:

1. The location of Boring Log BSB-66 is Sta. 28+97.08 (Center St.) Offset 35.24' Lt. Elev. 593.57