STA. 121+50 TO STA. 125+04	
TEMP EROSION CONTROL SEEDING	TOTAL
90 LBS/AC X 0 AC = 0 LBS	0 LBS

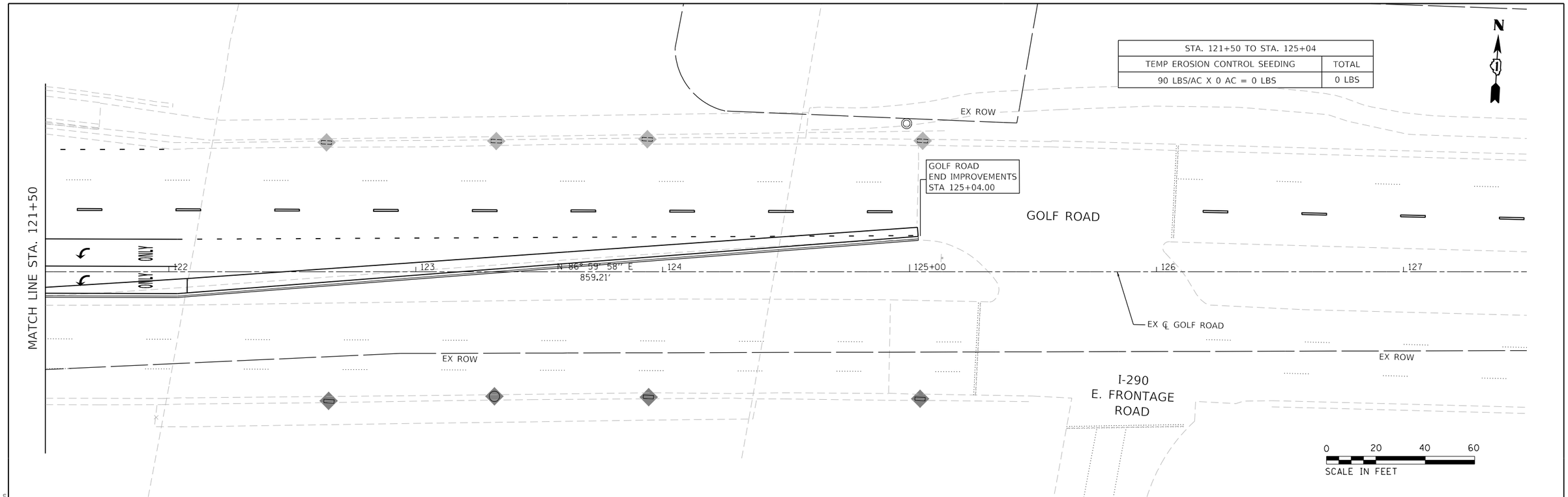

MODEL: Default
FILE NAME: F:\BS\1-078 W65 McConnor Parkway\CADD Sheets\Contract 02 CADD Sheets\10_Erosion and Sediment Control\22-00142-02-PV_SHT_Erosion and Sediment Control_Stage 3_06.dgn

BLA, Inc.	USER NAME = jrodriguez	DESIGNED - JR	REVISED -
		DRAWN - JR	REVISED -
	PLOT SCALE = 40.0000 ' / in.	CHECKED - GJE	REVISED -
	PLOT DATE = 6/4/2025	DATE - 02/18/2025	REVISED -

STATE OF ILLINOIS
DEPARTMENT OF TRANSPORTATION

MCCONNOR PARKWAY RECONSTRUCTION
EROSION AND SEDIMENT CONTROL – GOLF STAGE 3

SCALE: 1"=20' | SHEET 22 OF 26 SHEETS | STA. 121+50 TO STA. 125+04

F.A.U. RTE.	SECTION	COUNTY	TOTAL SHEETS	SHEET NO.
7008	22-00142-02-PV	COOK	245	101
		CONTRACT NO. 61L38		
		ILLINOIS FED. AID PROJECT		

CONSTRUCTION ROAD STABILIZATION

(PAID AS : STABILIZED CONSTRUCTION ENTRANCE)

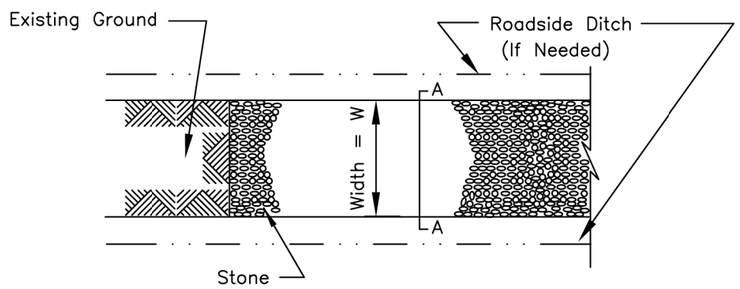

PLAN VIEW

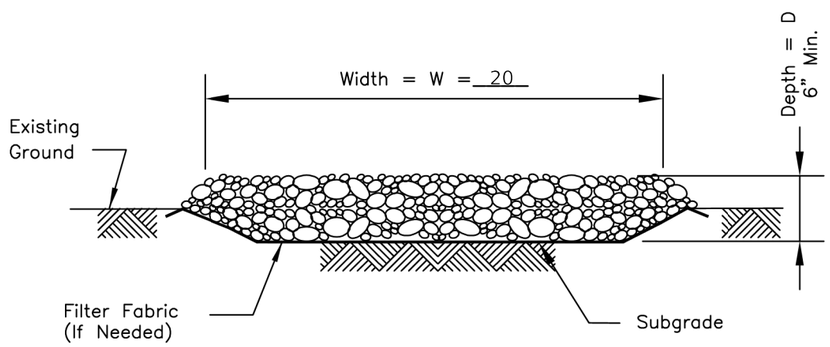

SECTION A–A

NOTES:

1. Filter fabric shall meet the requirements of material specification 592 GEOTEXTILE, Table 1 or 2, Class I, II or IV and shall be placed over the cleared area prior to the placing of rock.
2. Stone shall meet one of the following IDOT coarse aggregate gradations, CA–1, CA–2, CA–3, or CA–4 and be placed according to construction specification 25 ROCKFILL using placement Method 1 and Class III compaction.
3. See plans for construction road location, D and W dimensions.
4. Minimum width is 14 feet for one–way traffic and 20 feet for two–way traffic. Two–way traffic widths shall be increased a minimum of 4 feet for trailer traffic. Depending on the type of vehicle or equipment, speed, loads, climatic and other conditions under which vehicles and equipment operate an increase in the minimum widths may be required.
5. Roadway shall follow the contour of the natural terrain to the extent possible.

REFERENCE		STANDARD DWG. NO.
Project	NRCS Natural Resources Conservation Service	IL–506
Designed ____ Date ____		SHEET 1 OF 1
Checked ____ Date ____		DATE 1–29–99
Approved ____ Date ____		

AUTOCAD2006

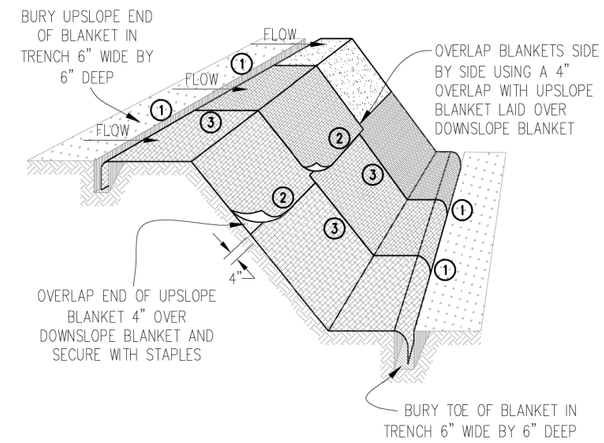

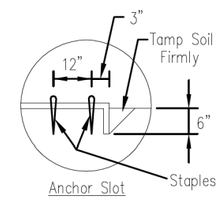

Anchor Slot

DETAIL 1

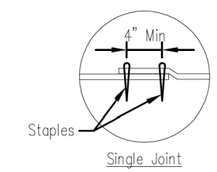

Single Joint

DETAIL 2

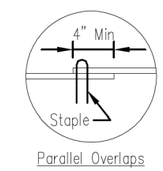

Parallel Overlaps

DETAIL 3

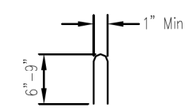

STAPLE DETAIL

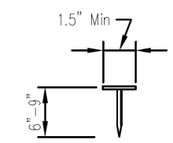

PUSH PIN DETAIL

NOTES:

1. Staples shall be placed in a diamond pattern at 2 per s.y. for stiched blankets. Non–stiched shall use 4 staples per s.y. of material. This equates to 200 staples with stiched blanket and 400 stapels with non–stiched blanket per 100 s.y. of material.
2. Staple or push pin lengths shall be selected based on soil type and conditions. (minimum staple length is 6")
3. Erosion control material shall be placed in contact with the soil over a prepared seedbed.
4. All anchor slots shall be stapled at approximately 12" intervals.

Sheet 1 of 1	Drawing No.	File No.	EROSION CONTROL BLANKET INSTALLATION DETAILS	Date
		IWM–520		Designed ____ Date ____
				Drawn B. JOHNSON 11/08
				Checked ____
				Approved ____

MODEL: Default
FILE NAME: F:\861-078 VOS McConnor Parkway\CADD Sheets\Contract 02 CADD Sheets\10 Erosion and Sediment Control\22-00142-02-PV SHT Erosion and Sediment Control Details.dgn

BLA, Inc.	USER NAME = jrodriguez	DESIGNED - JR	REVISED -	STATE OF ILLINOIS DEPARTMENT OF TRANSPORTATION
		DRAWN - JR	REVISED -	
	PLOT SCALE = 2.0000 ' / in.	CHECKED - GJE	REVISED -	
	PLOT DATE = 6/4/2025	DATE - 11/13/2023	REVISED -	

MCCONNOR PARKWAY RECONSTRUCTION
EROSION AND SEDIMENT CONTROL – DETAILS

SCALE: NTS | SHEET 23 OF 26 SHEETS | STA. N/A TO STA. N/A

F.A.U. RTE.	SECTION	COUNTY	TOTAL SHEETS	SHEET NO.
7008	22-00142-02-PV	COOK	245	102

CONTRACT NO. 61L38

ILLINOIS FED. AID PROJECT

INLET PROTECTION - PAVED AREAS
DROP-IN PROTECTION
(PAID AS : INLET FILTER)

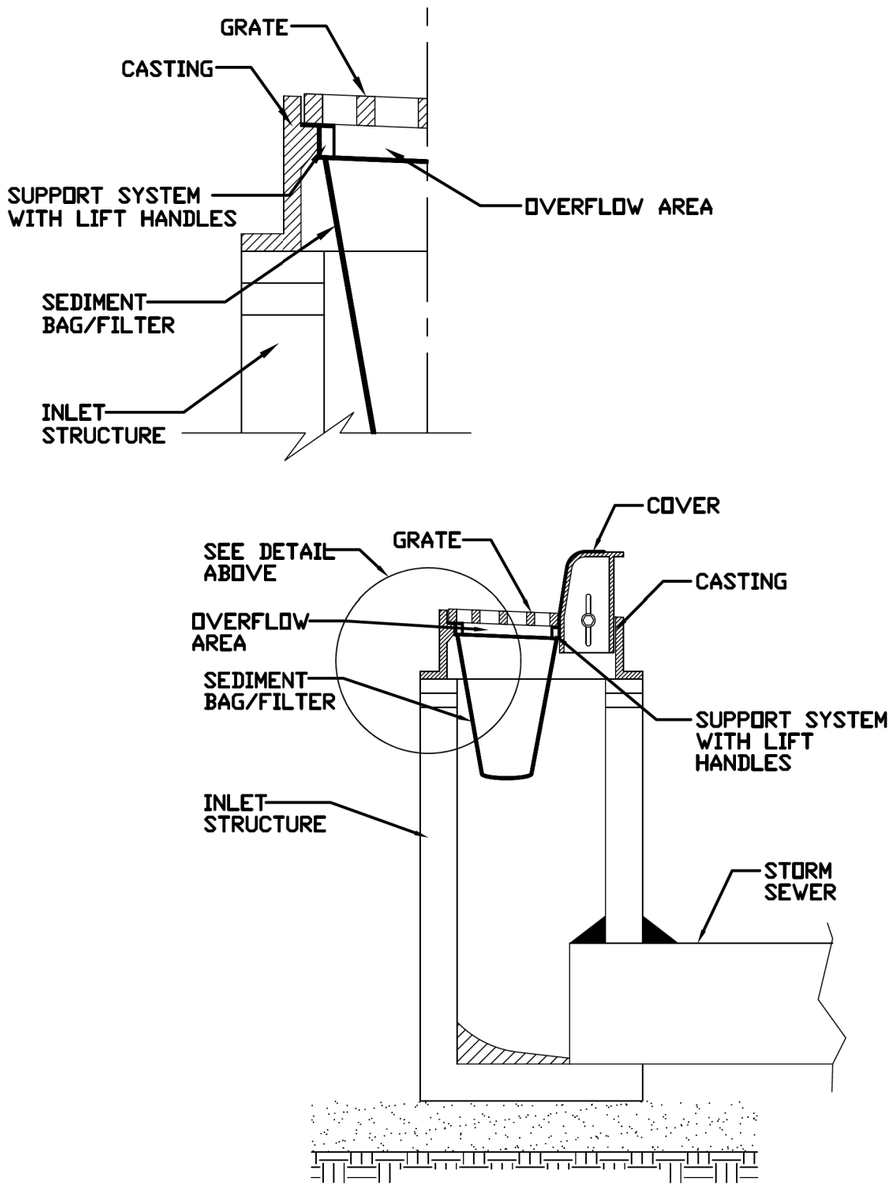

REFERENCE		STANDARD DWG. NO.
Project		IUM-561D
Designed	Date	SHEET 1 OF 1
Checked	Date	DATE 01-11-11
Approved	Date	

SILT FENCE PLAN

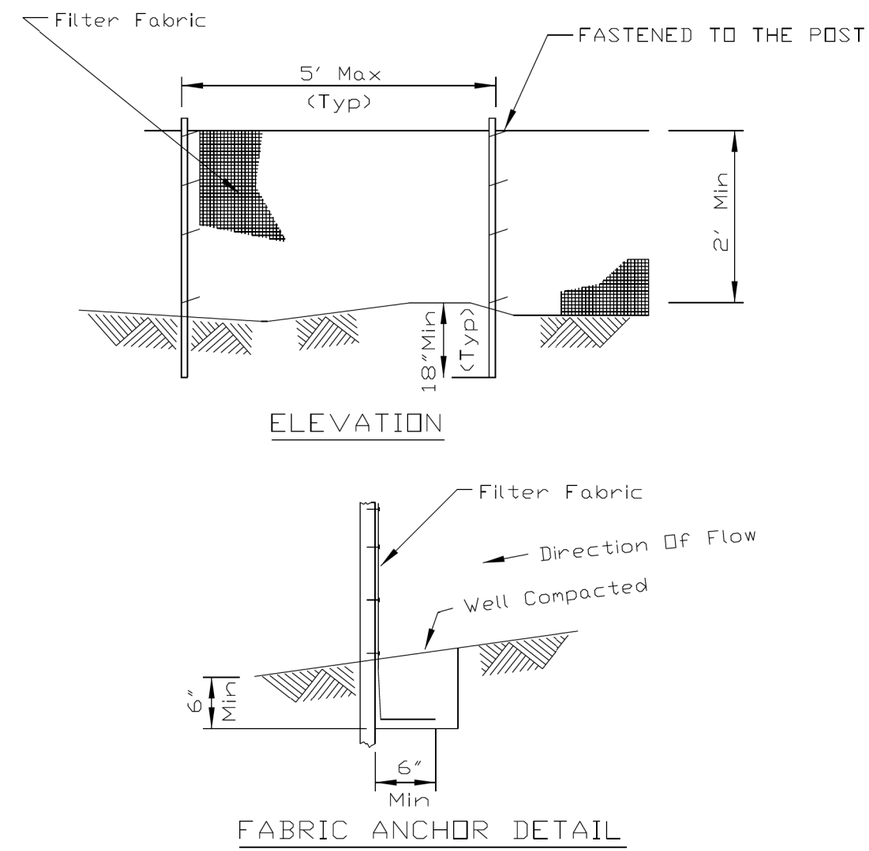

NOTES:

1. Temporary sediment fence shall be installed prior to any grading work in the area to be protected. They shall be maintained throughout the construction period and removed in conjunction with the final grading and site stabilization.
2. Filter fabric shall meet the requirements of material specification 592 Geotextile Table 1, Class 2.
3. Fence posts shall be either standard steel post or wood post 2" X 2" nominal.
4. THIS SHALL BE PAID FOR AS "PERIMETER EROSION BARRIER".

REFERENCE		STANDARD DWG. NO.
Project		IUM-620A
Designed	Date	SHEET 1 OF 2
Checked	Date	DATE 04-15-2021
Approved	Date	

MODEL: Default
FILE NAME: F:\861-078 VOS McConnor Parkway\CADD Sheets\Contract 02 CADD Sheets\10 Erosion and Sediment Control\22-00142-02-PV SHT Erosion and Sediment Control Details.dgn

BLA, Inc.	USER NAME = jrodriguez	DESIGNED - JR	REVISED -	STATE OF ILLINOIS DEPARTMENT OF TRANSPORTATION	MCCONNOR PARKWAY RECONSTRUCTION EROSION AND SEDIMENT CONTROL – DETAILS	F.A.U. RTE.	SECTION	COUNTY	TOTAL SHEETS	SHEET NO.
		DRAWN - JR	REVISED -			7008	22-00142-02-PV	COOK	245	103
	PLOT SCALE = 2.0000 ' / in.	CHECKED - GJE	REVISED -					CONTRACT NO. 61L38		
	PLOT DATE = 6/4/2025	DATE - 11/13/2023	REVISED -		SCALE: NTS SHEET 24 OF 26 SHEETS STA. N/A TO STA. N/A		ILLINOIS FED. AID PROJECT			

TREE PROTECTION - FENCING
(Highly Urbanized Areas)

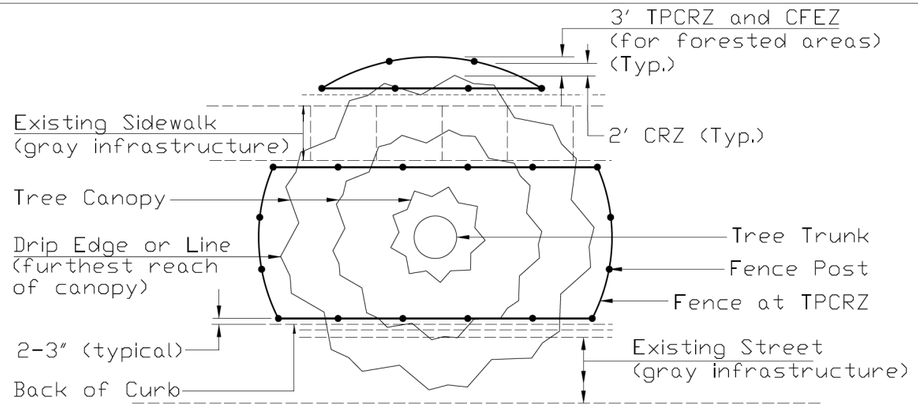

AERIAL VIEW
(Large Tree)

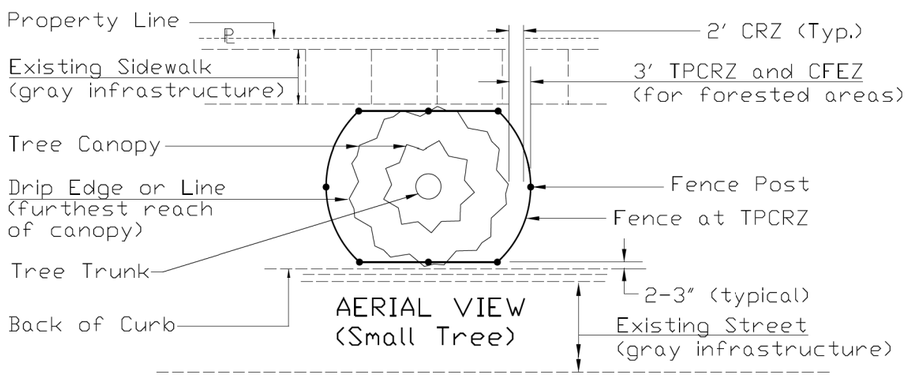

AERIAL VIEW
(Small Tree)

Notes:

1. Call J.U.L.I.E. (800-892-0123) for the location of existing utilities 48 hours prior to commencement of work.

2. The CRZ is located 2' from the farthest outreaching branch (drip edge) or the distance as determined by the ISA trunk diameter method or whichever is greater.

3. On sides of the tree not constricted by gray infrastructure, the fence shall be located 1 foot from the Critical Root Zone (CRZ) of the protected tree, thus creating the Tree Protection Critical Root Zone (TPCRZ). The Critical Forest Edge Zone (CFEZ), for forested areas, shall also be located at the TPCRZ.

REFERENCE
Project _____
Designed _____ Date _____
Checked _____ Date _____
Approved _____ Date _____

STANDARD DWG. NO.
IUM-690-B
SHEET 1 OF 2
DATE 09-14-2017

TREE PROTECTION - FENCING
(Highly Urbanized Areas)

Notes: (cont.)

4. On sides of the tree where there is gray infrastructure conflict the fence shall be 3 to 4 inches from the structure. Where the structure is a sidewalk and the CRZ goes beyond the sidewalk to the adjoining greenspace, the Tree Protection Fencing shall continue to the CRZ without impeding the flow of the traffic of the sidewalk.

5. Fence Posts shall be either 6' steel posts @ 1.33Lbs./Ft. or 2" x 2" nominal wood posts.

6. A chain link fence with Construction Specification Chain Link Fence IUM 91 or better (as approved by the local Forester per local ordinances singularly or in tandem with the project Engineer) shall be used. Fencing shall be a minimum height of 4'. Metal posts shall be placed 6' on center (OC) and fencing is securely anchored to the ground.

7. Outside the TPCRZ, erosion and sediment control measures shall be installed to prevent sediment reaching the TPCRZ. These measures shall extend out from the fence 10' and shall be continuous around the perimeter of the fence. These measures include, but are not limited to vegetative filter strip, rolled excelsior blankets and woodchip mulch with a 3" to 5" depth. Other methods may be used if approved by the Professional Forester, Certified Arborist or Horticulturalist. Installation shall cause no disturbance to soils.

8. THIS SHALL BE PAID FOR AS TEMPORARY FENCE.

REFERENCE
Project _____
Designed _____ Date _____
Checked _____ Date _____
Approved _____ Date _____

STANDARD DWG. NO.
IUM-690-B
SHEET 2 OF 2
DATE 09-14-2017

MODEL: Default
FILE NAME: F:\B61-078 WS McConnor Parkway\CADD Sheets\Contract 02 CADD Sheets\10_Erosion and Sediment Control\22-00142-02-PV_SHT_Erosion and Sediment Control Details.dgn

BLA, Inc.

USER NAME = jrodriguez	DESIGNED - JR	REVISED -
	DRAWN - JR	REVISED -
PLOT SCALE = 2.0000 ' / in.	CHECKED - GJE	REVISED -
PLOT DATE = 6/4/2025	DATE - 11/13/2023	REVISED -

STATE OF ILLINOIS
DEPARTMENT OF TRANSPORTATION

MCCONNOR PARKWAY RECONSTRUCTION
EROSION AND SEDIMENT CONTROL - DETAILS

SCALE: NTS | SHEET 25 OF 26 SHEETS | STA. N/A TO STA. N/A

F.A.U. RTE.	SECTION	COUNTY	TOTAL SHEETS	SHEET NO.
7008	22-00142-02-PV	COOK	245	104

CONTRACT NO. 61L38
ILLINOIS FED. AID PROJECT

AUTOCAD2006

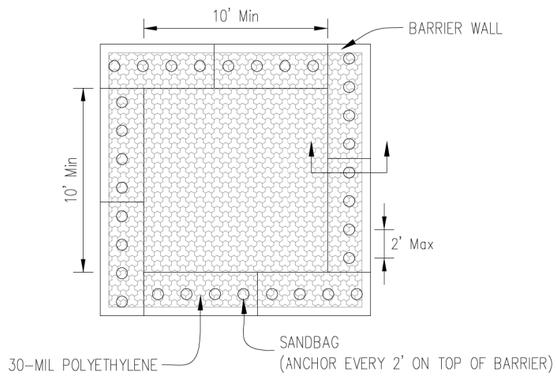

PLAN VIEW

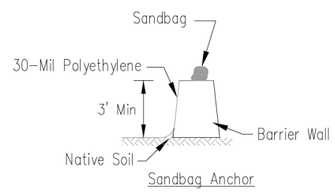

BARRIER WALL ANCHOR SECTION

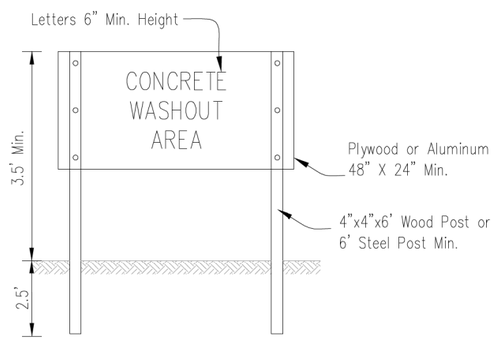

SIGN DETAIL

NOTES:

1. Maintaining temporary concrete washout facilities shall include removing and disposing of hardend concrete and/or slurry and returning the faciliities to a functional condition.
2. Facility shall be cleaned or reconstructed in a new area once washout becomes two-thirds full.
3. LOCATION WITHIN THE PROJECT WILL VARY AND IS TO BE DETERMINED BY THE ENINGEER.

Sheet 3 of 3	File No. / Drawing No. IUM-654BW	TEMPORARY CONCRETE WASHOUT FACILITY – BARRIER WALL	Designed	Date
			Drawn B. JOHNSON	6/08
			Checked	
			Approved	

ROLLED EROSION CONTROL PRODUCTS

STAKING PATTERN GUIDE

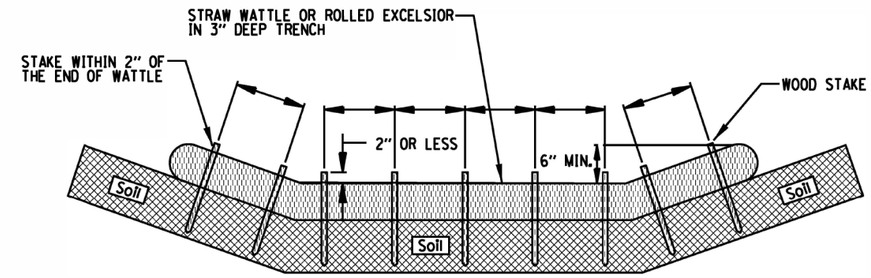

NOTES:
1. OVERLAP MINIMUM IS THE DIAMETER OF THE ROLL.
2. 4' SPACING FOR WATTLES.
3. 2' SPACING FOR ROLLED EXCELSIOR.
4. OR SPACE ACCORDING TO MANUFACTURER'S SPECIFICATIONS.

STAKE DETAIL

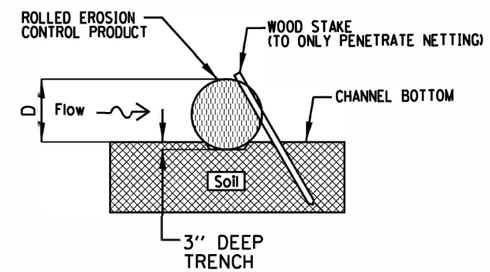

NOTES:
1. DRAWINGS ARE NOT TO SCALE.
2. ENDS OF WATTLES OR ROLLED EXCELSIOR SHALL BE TURNED AT LEAST 6" UPSLOPE.
3. RECOMMENDED STAKES ARE 1 1/8" WIDE x 1 1/8" THICK x 30" LONG.
4. STAKES SHALL NOT EXTEND ABOVE THE STRAW WATTLE MORE THAN 2".
5. SPACING: THE TOE OF THE UPSTREAM DITCH CHECK SHALL CREATE A HORIZONTAL LINE WITH THE TOP OF THE DOWNSTREAM DITCH CHECK.
6. TO BE PAID FOR AS TEMPORARY DITCH CHECK

REFERENCE			STANDARD DWG. NO.
Project			IUM-514
Designed	Date	ILLINOIS URBAN MANUAL	SHEET 1 OF 1
Checked	Date		DATE 08-2-2019
Approved	Date		

MODEL: Default
FILE NAME: F:\861-078 VOS McConnor Parkway\CADD Sheets\Contract 02 CADD Sheets\10 Erosion and Sediment Control\22-00142-02-PV_SHT Erosion and Sediment Control Details.dgn

BLA, Inc.	USER NAME = jrodriguez	DESIGNED - JR	REVISED -
		DRAWN - JR	REVISED -
	PLOT SCALE = 2.0000 ' / in.	CHECKED - GJE	REVISED -
	PLOT DATE = 6/4/2025	DATE - 11/13/2023	REVISED -

STATE OF ILLINOIS
DEPARTMENT OF TRANSPORTATION

MCCONNOR PARKWAY RECONSTRUCTION
EROSION AND SEDIMENT CONTROL – DETAILS

SCALE: NTS | SHEET 26 OF 26 SHEETS | STA. N/A | TO STA. N/A

F.A.U. RTE.	SECTION	COUNTY	TOTAL SHEETS	SHEET NO.
7008	22-00142-02-PV	COOK	245	105

CONTRACT NO. 62L38

ILLINOIS FED. AID PROJECT

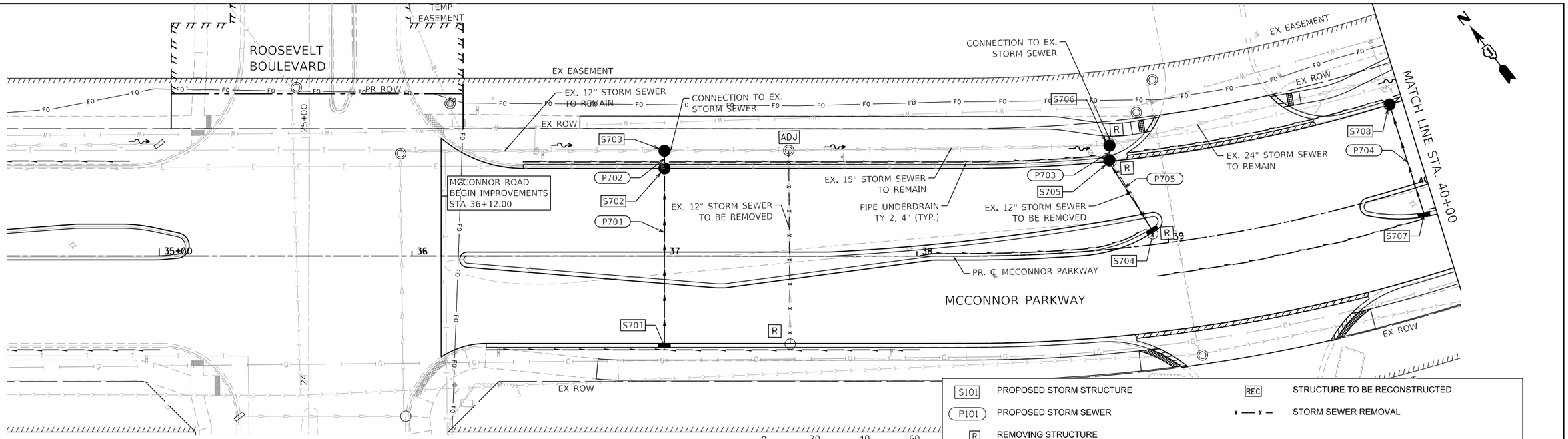

NOTES:
THE COST OF INTERCONNECTIONS BETWEEN THE PROPOSED AND EXISTING SEWER SYSTEMS SHALL BE INCLUDED IN THE VARIOUS UNIT PRICES OF THE PROPOSED STORM SEWER. THE COST OF INSTALLING A NEW MANHOLE OVER AN EXISTING STORM SEWER, "DOGHOUSING," SHALL BE INCLUDED IN THE VARIOUS UNIT PRICES FOR THE PROPOSED STORM STRUCTURES.

S101	PROPOSED STORM STRUCTURE
P101	PROPOSED STORM SEWER
R	REMOVING STRUCTURE
ADJ	STRUCTURE TO BE ADJUSTED
REC	STRUCTURE TO BE RECONSTRUCTED
x — x —	STORM SEWER REMOVAL

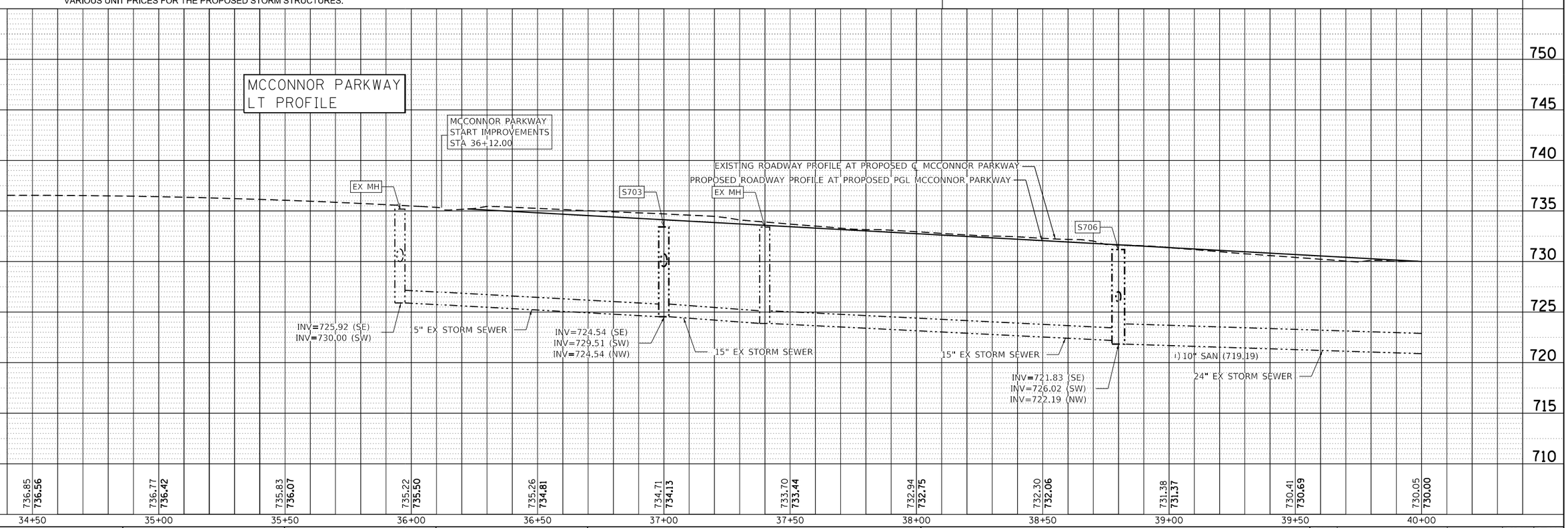

PLAN		BY	DATE
NOTE BOOK NO. ____	SURVEYED		
	PLOTTED		
	ALIGNMENT CHECKED		
	RT. OF WAY CHECKED		
	CADD FILE NAME		

PROFILE		BY	DATE
NOTE BOOK NO. ____	SURVEYED		
	PLOTTED		
	GRADES CHECKED		
	BM. NOTED		
	STRUCTURE NOTATNS CHKD		

MODEL: Default
FILE NAME: Fa861-078 VoS McConnor Parkway\CADD Sheets\Contract 02 CADD Sheets\11 Drainage and Utilities\22-00142-02-PV_SHT_Drainage and Utilities 6.dgn

BLA, Inc.

USER NAME = jrodriguez	DESIGNED - JR	REVISED -
	DRAWN - JR	REVISED -
PLOT SCALE = 40.0000 ' / in.	CHECKED - GJE	REVISED -
PLOT DATE = 6/4/2025	DATE - 02/18/2025	REVISED -

STATE OF ILLINOIS
DEPARTMENT OF TRANSPORTATION

MCCONNOR PARKWAY RECONSTRUCTION
DRAINAGE AND UTILITIES PLAN & PROFILE

SCALE: 1" = 20' | SHEET 1 OF 14 SHEETS | STA. 34+50 TO STA. 40+00

F.A.U. RTE.	SECTION	COUNTY	TOTAL SHEETS	SHEET NO.
7008	22-00142-02-PV	COOK	245	106

CONTRACT NO. 61L38

ILLINOIS FED. AID PROJECT

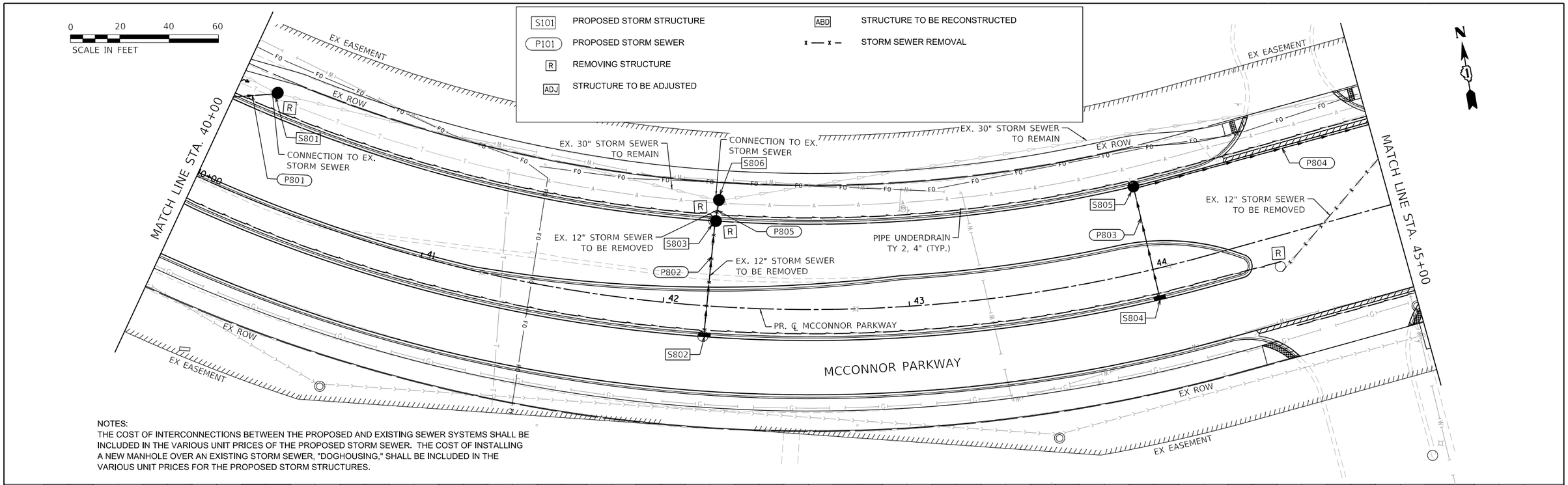

NOTES:
THE COST OF INTERCONNECTIONS BETWEEN THE PROPOSED AND EXISTING SEWER SYSTEMS SHALL BE INCLUDED IN THE VARIOUS UNIT PRICES OF THE PROPOSED STORM SEWER. THE COST OF INSTALLING A NEW MANHOLE OVER AN EXISTING STORM SEWER, "DOGHOUSING," SHALL BE INCLUDED IN THE VARIOUS UNIT PRICES FOR THE PROPOSED STORM STRUCTURES.

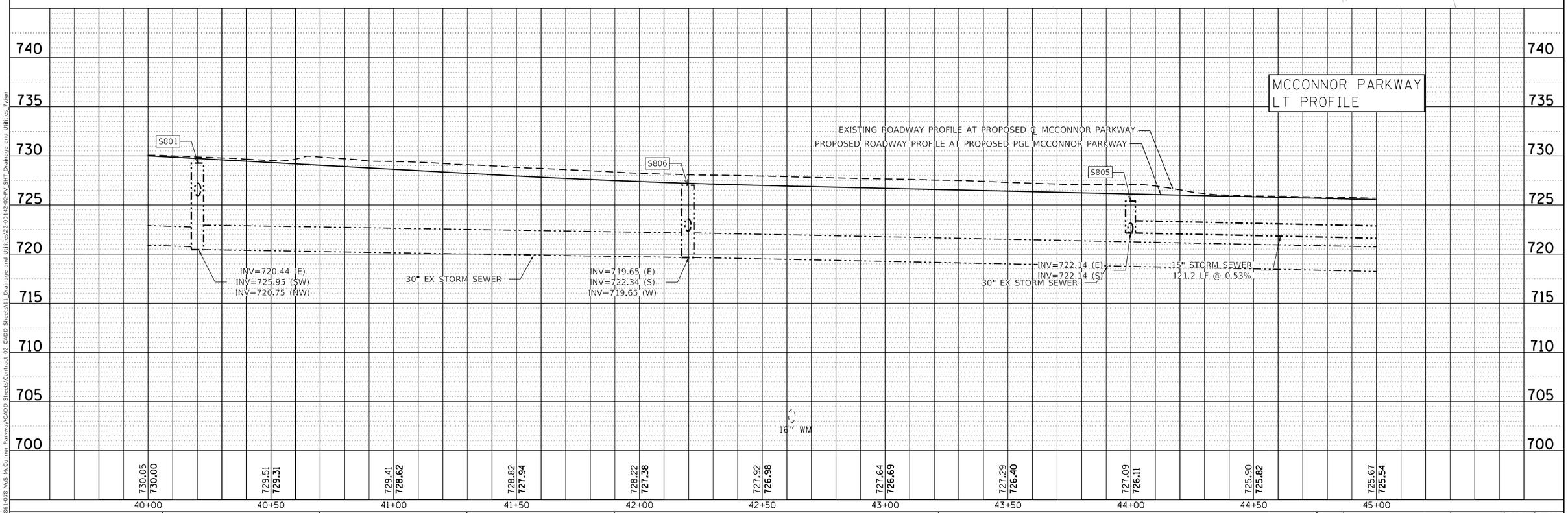

PLAN		BY	DATE
NOTE BOOK NO. ____	SURVEYED		
	PLOTTED		
	ALIGNMENT CHECKED		
	RT. OF WAY CHECKED		
	CADD FILE NAME		

PROFILE		BY	DATE
NOTE BOOK NO. ____	SURVEYED		
	PLOTTED		
	ALIGNMENT CHECKED		
	BM. NOTED		
	STRUCTURE NOTATNS CHKD		

MODEL: Default
FILE NAME: F:\861-078 VoS McConnor Parkway\CADD Sheets\Contract 02 CADD Sheets\11_Drainage and Utilities\22-00142-02-PV_SHT_Drainage and Utilities_7.dgn

BLA, Inc.

USER NAME = jrodriguez	DESIGNED - JR	REVISED -
	DRAWN - JR	REVISED -
PLOT SCALE = 40.0000 ' / in.	CHECKED - GJE	REVISED -
PLOT DATE = 6/4/2025	DATE - 02/18/2025	REVISED -

STATE OF ILLINOIS
DEPARTMENT OF TRANSPORTATION

MCCONNOR PARKWAY RECONSTRUCTION
DRAINAGE AND UTILITIES PLAN & PROFILE

SCALE: 1" = 20' | SHEET 2 OF 14 SHEETS | STA. 40+00 TO STA. 45+00

F.A.U. RTE.	SECTION	COUNTY	TOTAL SHEETS	SHEET NO.
7008	22-00142-02-PV	COOK	245	107

CONTRACT NO. 61L38

ILLINOIS FED. AID PROJECT

NOTES:
THE COST OF INTERCONNECTIONS BETWEEN THE PROPOSED AND EXISTING SEWER SYSTEMS SHALL BE INCLUDED IN THE VARIOUS UNIT PRICES OF THE PROPOSED STORM SEWER. THE COST OF INSTALLING A NEW MANHOLE OVER AN EXISTING STORM SEWER, "DOGHOUSING," SHALL BE INCLUDED IN THE VARIOUS UNIT PRICES FOR THE PROPOSED STORM STRUCTURES.

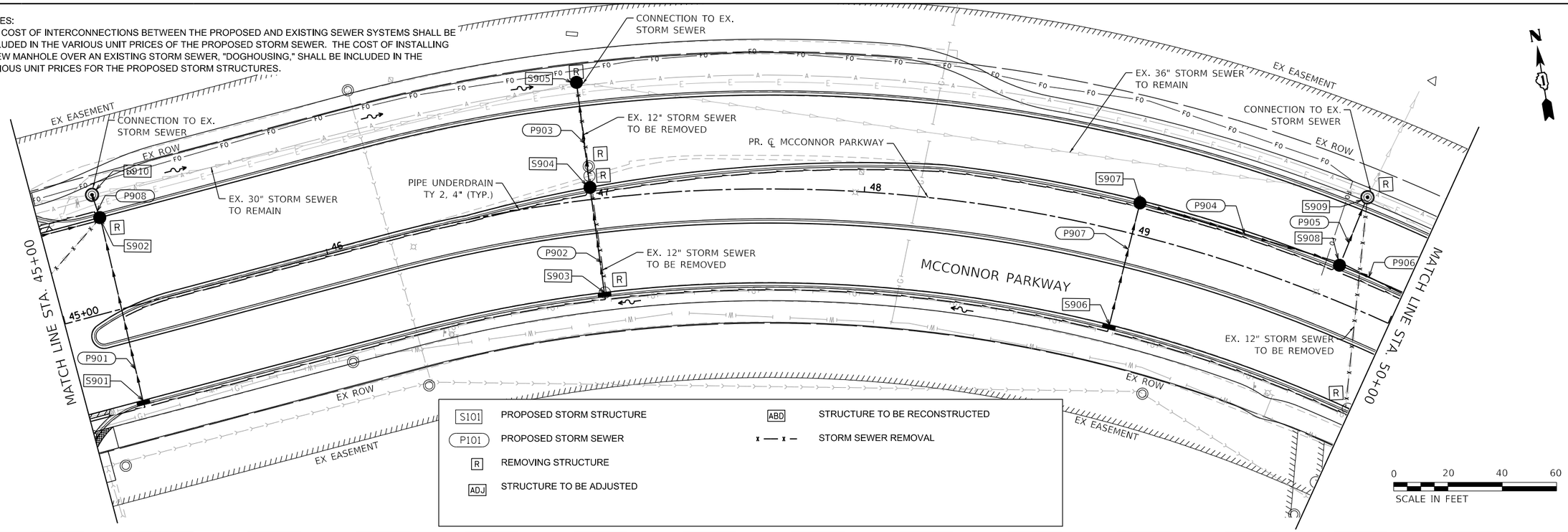

S101	PROPOSED STORM STRUCTURE
P101	PROPOSED STORM SEWER
R	REMOVING STRUCTURE
ADJ	STRUCTURE TO BE ADJUSTED
ABD	STRUCTURE TO BE RECONSTRUCTED
x — x —	STORM SEWER REMOVAL

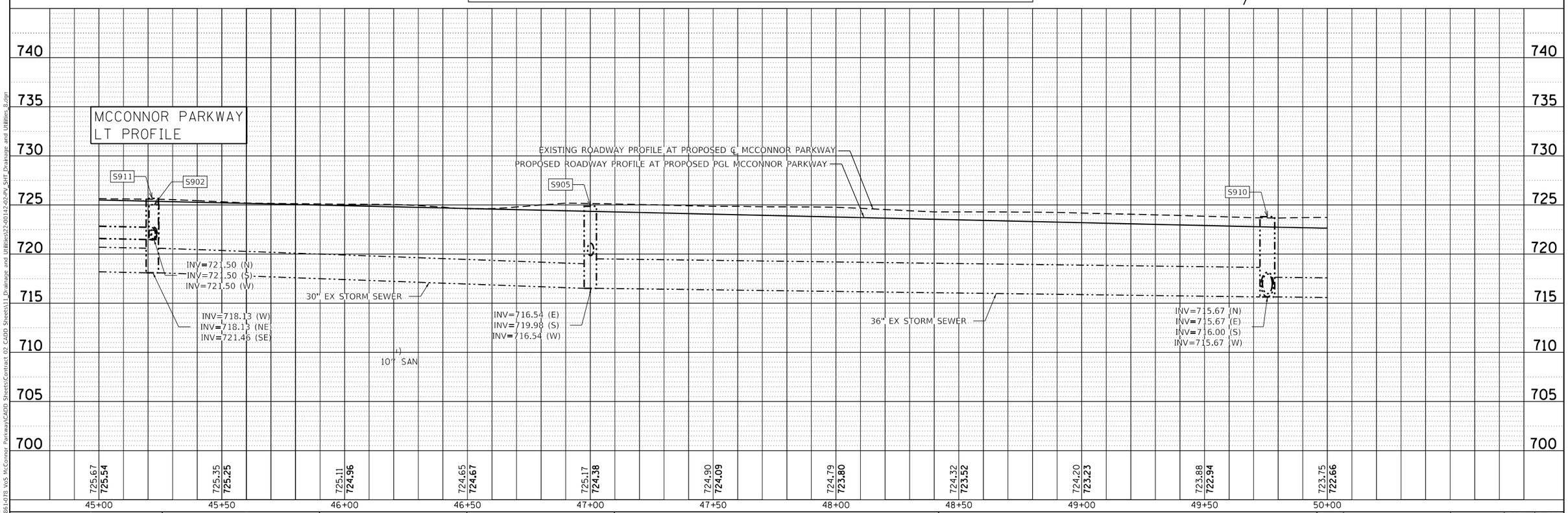

PLAN	BY	DATE
SURVEYED		
PLOTTED		
ALIGNMENT CHECKED		
RT. OF WAY CHECKED		
CADD FILE NAME		
NOTE BOOK NO.		

PROFILE	BY	DATE
SURVEYED		
PLOTTED		
GRADES CHECKED		
BM. NOTED		
STRUCTURE NOTATNS CHKD		
NOTE BOOK NO.		

MODEL: Default
FILE NAME: F:\861-078 VGS McConnor Parkway\CADD Sheets\Contract 02 CADD Sheets\11_Drainage and Utilities\22-00142-02-PV_SHT_Drainage and Utilities_8.dgn

BLA, Inc.

USER NAME = jrodriguez	DESIGNED - JR	REVISED -
	DRAWN - JR	REVISED -
PLOT SCALE = 40.0000 ' / in.	CHECKED - GJE	REVISED -
PLOT DATE = 6/4/2025	DATE - 02/18/2025	REVISED -

STATE OF ILLINOIS
DEPARTMENT OF TRANSPORTATION

MCCONNOR PARKWAY RECONSTRUCTION
DRAINAGE AND UTILITIES PLAN & PROFILE

SCALE: 1" = 20' | SHEET 3 OF 14 SHEETS | STA. 45+00 TO STA. 50+00

F.A.U. RTE.	SECTION	COUNTY	TOTAL SHEETS	SHEET NO.
7008	22-00142-02-PV	COOK	245	108

CONTRACT NO. 61L38
ILLINOIS FED. AID PROJECT

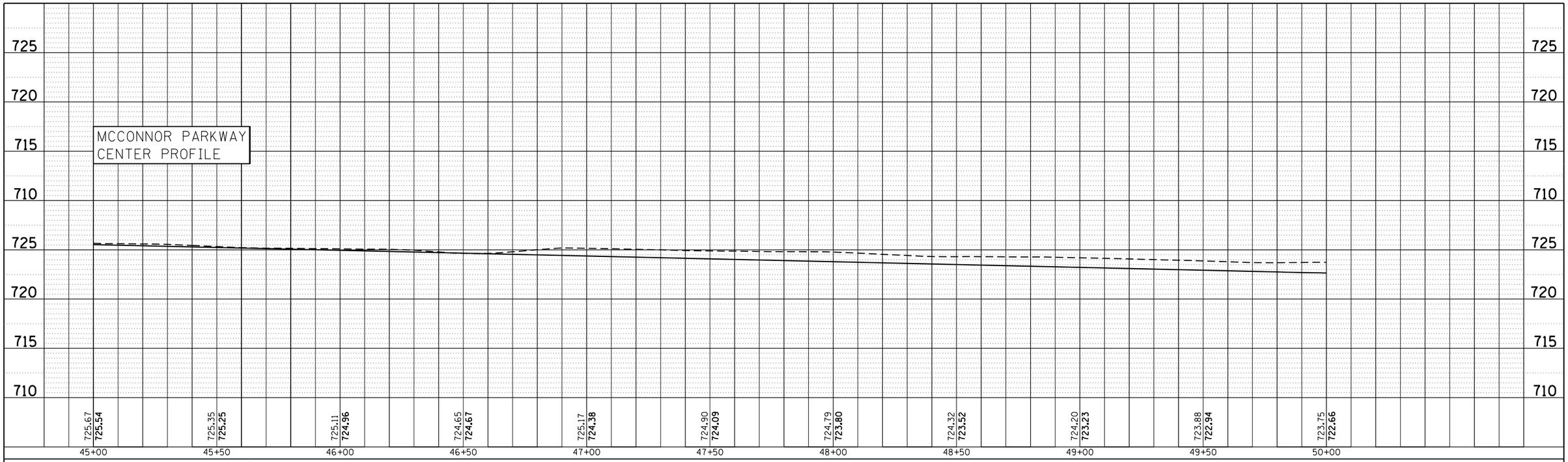

0 20 40 60
SCALE IN FEET

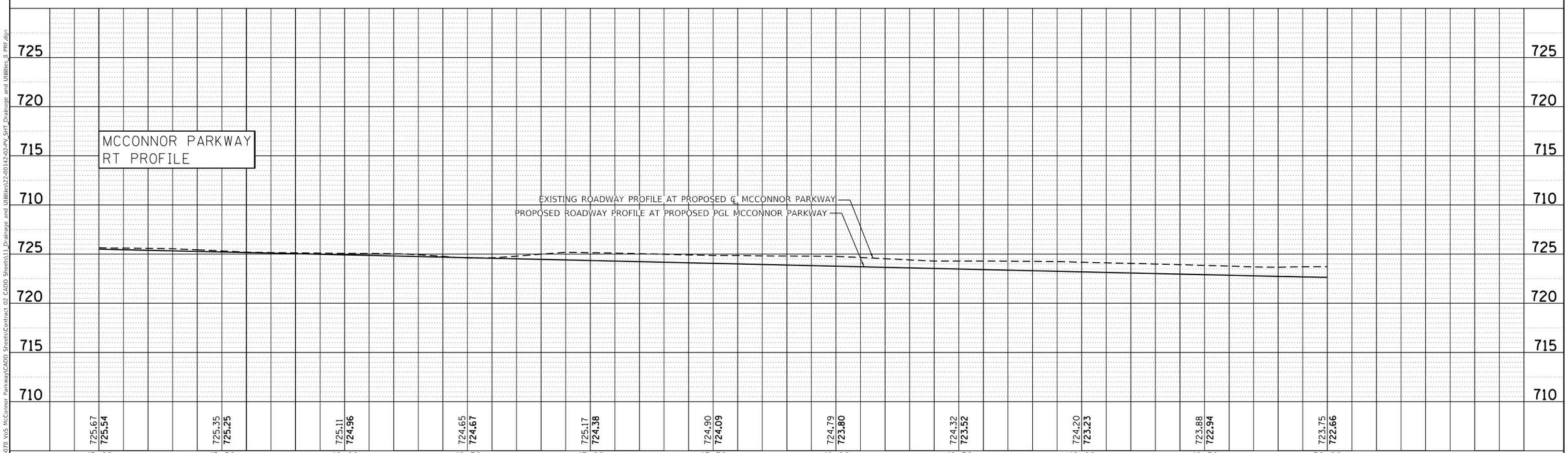

PLAN
SURVEYED
PLOTTED
ALIGNMENT CHECKED
RT. OF WAY CHECKED
CADD FILE NAME
NOTE BOOK NO.
BY
DATE

PROFILE
SURVEYED
PLOTTED
GRADES CHECKED
B.M. NOTED
STRUCTURE NOTAT'NS CHK'D
NOTE BOOK NO.
BY
DATE

MODEL: Default
FILE NAME: Fi861-078 Vo5 McConnor Parkway\CADD Sheets\Contract 02 CADD Sheets\11_Drainage and Utilities\22-00142-02-PV_SHT_Drainage and Utilities_8 PRF.dgn

BLA, Inc.

USER NAME = jrodriguez	DESIGNED - JR	REVISED -
	DRAWN - JR	REVISED -
PLOT SCALE = 40.0000 ' / in.	CHECKED - GJE	REVISED -
PLOT DATE = 6/4/2025	DATE - 02/18/2025	REVISED -

STATE OF ILLINOIS
DEPARTMENT OF TRANSPORTATION

MCCONNOR PARKWAY RECONSTRUCTION
DRAINAGE AND UTILITIES PLAN & PROFILE

SCALE: 1" = 20' | SHEET 4 OF 14 SHEETS | STA. 45+00 TO STA. 50+00

F.A.U. RTE.	SECTION	COUNTY	TOTAL SHEETS	SHEET NO.
7008	22-00142-02-PV	COOK	245	109
		CONTRACT NO. 61L38		
		ILLINOIS FED. AID PROJECT		

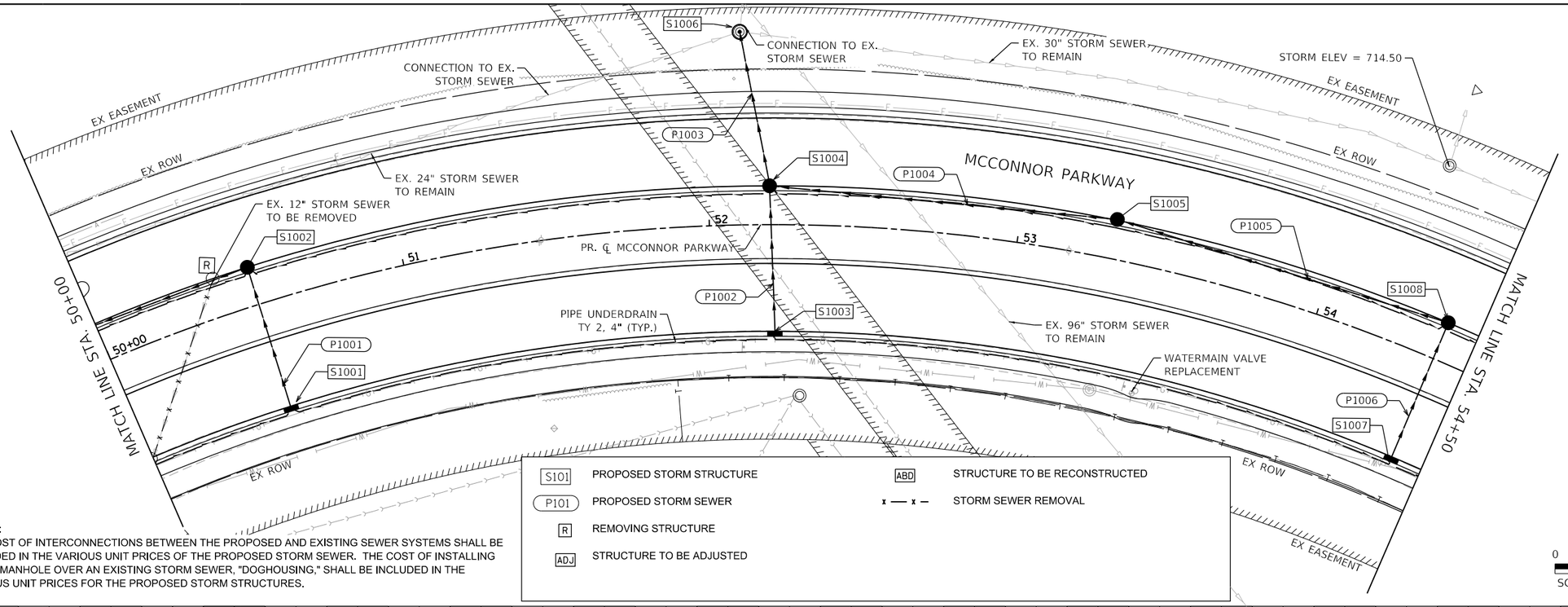

S101	PROPOSED STORM STRUCTURE
P101	PROPOSED STORM SEWER
R	REMOVING STRUCTURE
ADJ	STRUCTURE TO BE ADJUSTED
ABD	STRUCTURE TO BE RECONSTRUCTED
x — x —	STORM SEWER REMOVAL

0 20 40 60
SCALE IN FEET

NOTES:
THE COST OF INTERCONNECTIONS BETWEEN THE PROPOSED AND EXISTING SEWER SYSTEMS SHALL BE INCLUDED IN THE VARIOUS UNIT PRICES OF THE PROPOSED STORM SEWER. THE COST OF INSTALLING A NEW MANHOLE OVER AN EXISTING STORM SEWER, "DOGHOUSING," SHALL BE INCLUDED IN THE VARIOUS UNIT PRICES FOR THE PROPOSED STORM STRUCTURES.

PLAN
NOTE BOOK NO.
SURVEYED
PLOTTED
ALIGNMENT CHECKED
RT. OF WAY CHECKED
CADD FILE NAME
BY
DATE

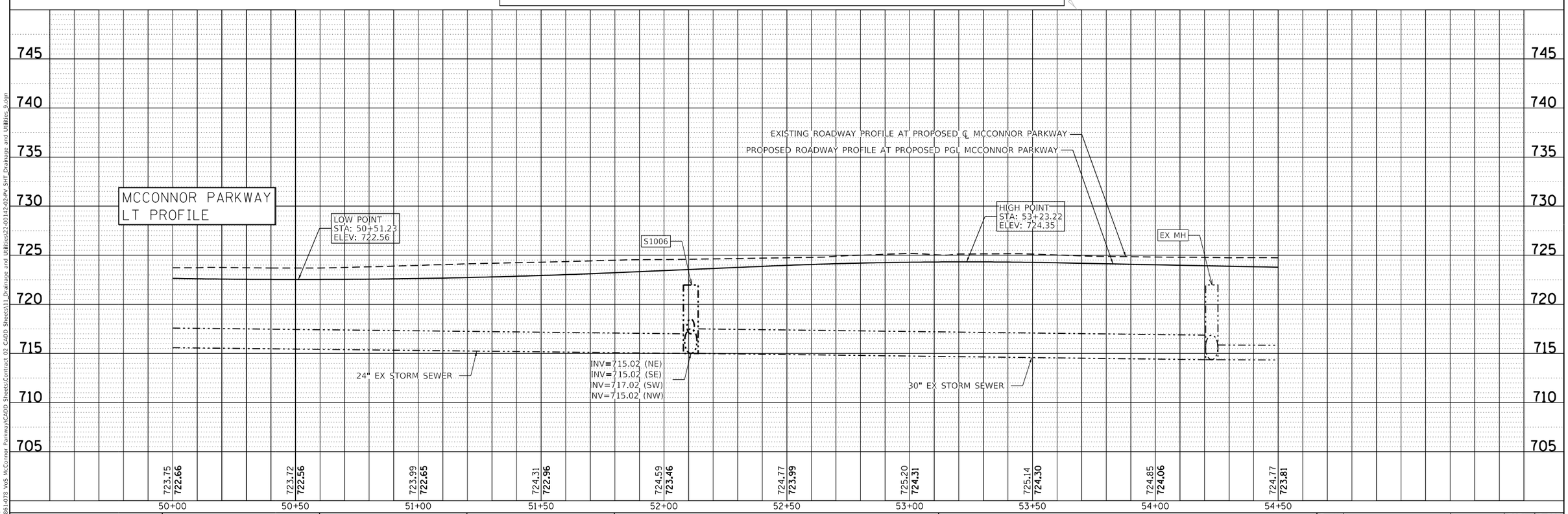

PROFILE
NOTE BOOK NO.
SURVEYED
PLOTTED
ALIGNMENT CHECKED
BM. NOTED
STRUCTURE NOTATNS CHKD
BY
DATE

MODEL: Default
FILE NAME: Fa861-078 VoS McConnor Parkway\CADD Sheets\Contract 02 CADD Sheets\11 Drainage and Utilities\22-00142-02-PV SHT Drainage and Utilities 9.dgn

BLA, Inc.	USER NAME = jrodriguez	DESIGNED - JR	REVISED -
		DRAWN - JR	REVISED -
	PLOT SCALE = 40.0000 ' / in.	CHECKED - GJE	REVISED -
	PLOT DATE = 6/4/2025	DATE - 02/18/2025	REVISED -

STATE OF ILLINOIS
DEPARTMENT OF TRANSPORTATION

MCCONNOR PARKWAY RECONSTRUCTION
DRAINAGE AND UTILITIES PLAN & PROFILE

SCALE: 1" = 20' | SHEET 5 OF 14 SHEETS | STA. 50+00 TO STA. 54+50

F.A.U. RTE.	SECTION	COUNTY	TOTAL SHEETS	SHEET NO.
7008	22-00142-02-PV	COOK	245	110

CONTRACT NO. 61L38
ILLINOIS FED. AID PROJECT

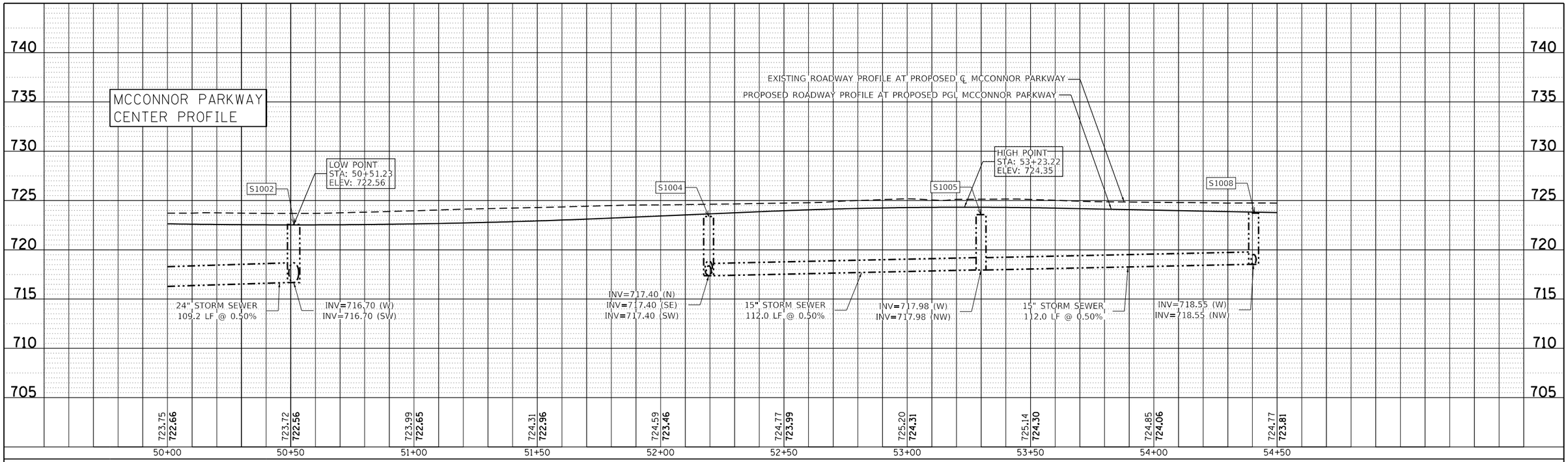

0 20 40 60
SCALE IN FEET

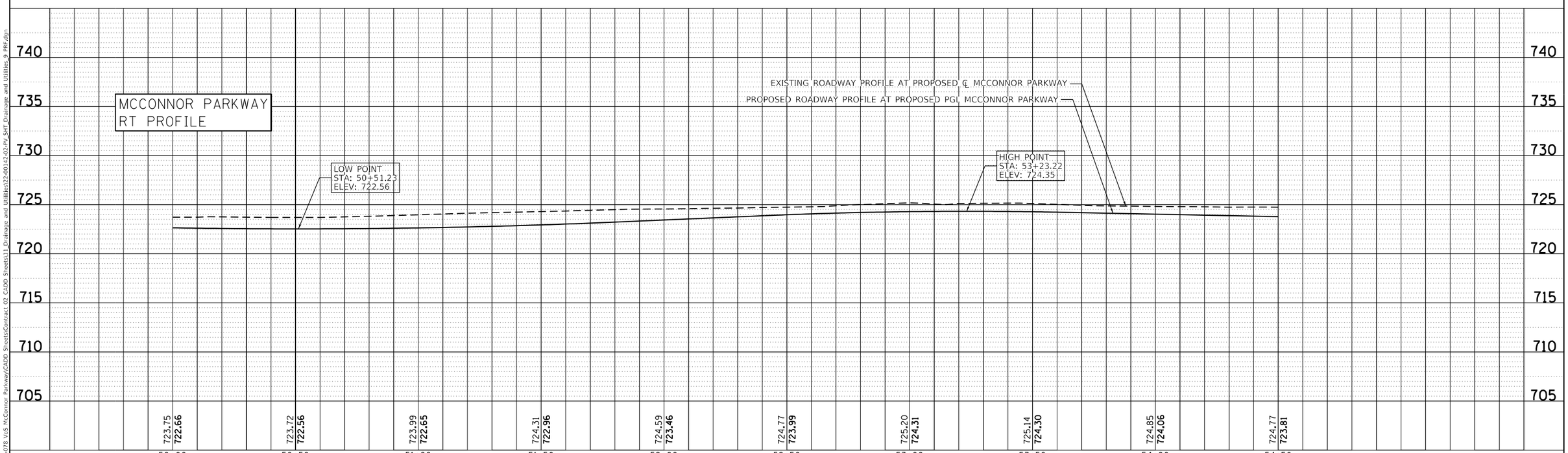

PLAN	BY	DATE
SURVEYED		
PLOTTED		
ALIGNMENT CHECKED		
RT. OF WAY CHECKED		
CADD FILE NAME		
NOTE BOOK NO.		

PROFILE	BY	DATE
SURVEYED		
PLOTTED		
GRADES CHECKED		
BLM NOTED		
STRUCTURE NOTATIONS CHKD		
NOTE BOOK NO.		

MODEL: Default
FILE NAME: Fi861-078 VoS McConnor Parkway\CADD Sheets\Contract 02 CADD Sheets\11_Drainage and Utilities\22-00142-02-PV_SHT_Drainage and Utilities_9 PRF.dgn

BLA, Inc.

USER NAME = jrodriguez	DESIGNED - JR	REVISED -
	DRAWN - JR	REVISED -
PLOT SCALE = 40.0000 ' / in.	CHECKED - GJE	REVISED -
PLOT DATE = 6/4/2025	DATE - 02/18/2025	REVISED -

STATE OF ILLINOIS
DEPARTMENT OF TRANSPORTATION

MCCONNOR PARKWAY RECONSTRUCTION
DRAINAGE AND UTILITIES PLAN & PROFILE

SCALE: 1" = 20' | SHEET 6 OF 14 SHEETS | STA. 50+00 TO STA. 54+50

F.A.U. RTE.	SECTION	COUNTY	TOTAL SHEETS	SHEET NO.
7008	22-00142-02-PV	COOK	245	111
		CONTRACT NO. 61L38		
		ILLINOIS FED. AID PROJECT		

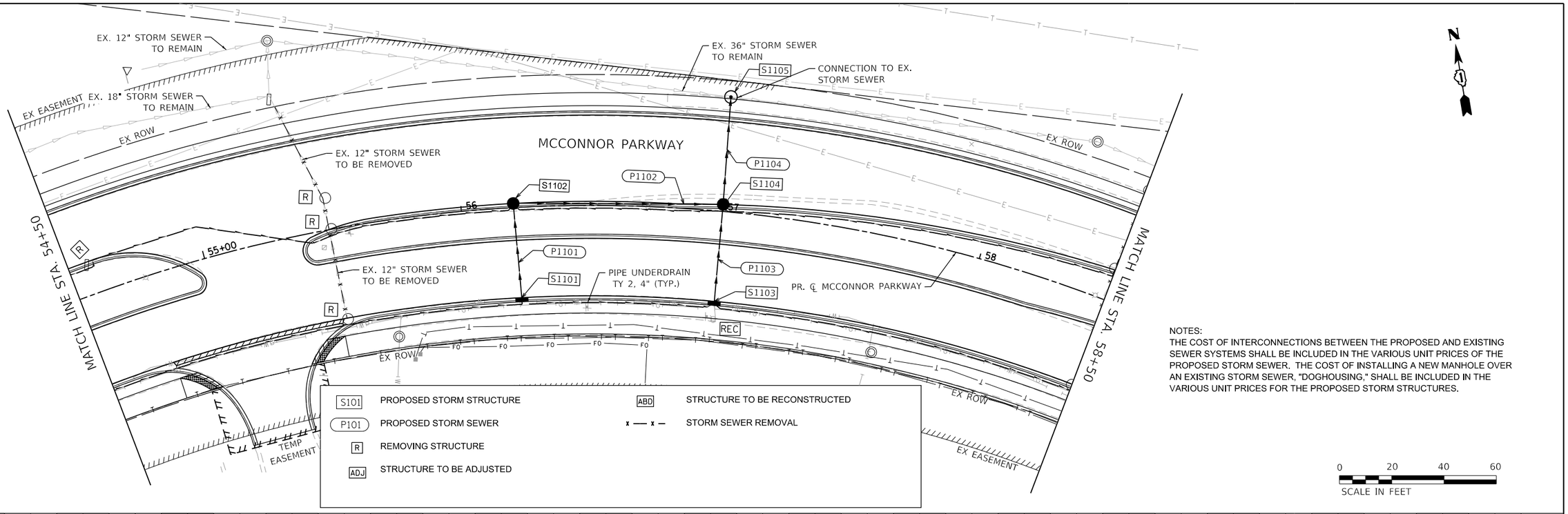

NOTES:
THE COST OF INTERCONNECTIONS BETWEEN THE PROPOSED AND EXISTING SEWER SYSTEMS SHALL BE INCLUDED IN THE VARIOUS UNIT PRICES OF THE PROPOSED STORM SEWER. THE COST OF INSTALLING A NEW MANHOLE OVER AN EXISTING STORM SEWER, "DOGHOUSING," SHALL BE INCLUDED IN THE VARIOUS UNIT PRICES FOR THE PROPOSED STORM STRUCTURES.

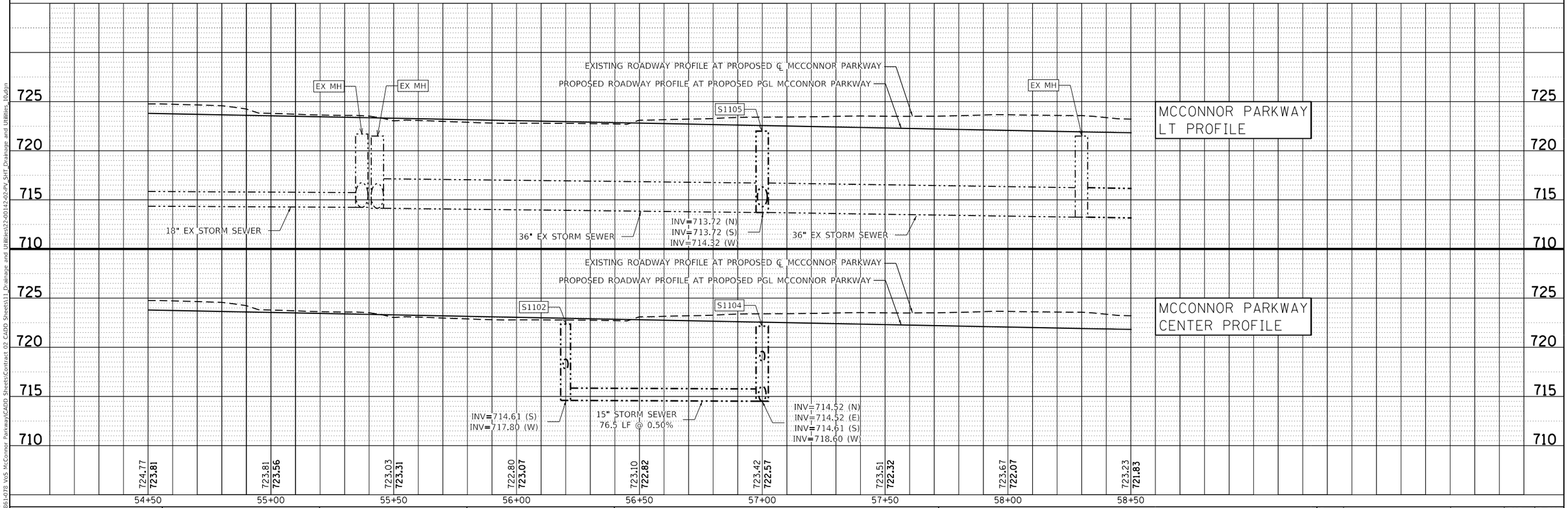

PLAN	BY	DATE
SURVEYED		
PLOTTED		
ALIGNMENT CHECKED		
RT. OF WAY CHECKED		
CADD FILE NAME		
NOTE BOOK NO.		

PROFILE	BY	DATE
SURVEYED		
PLOTTED		
GRADES CHECKED		
BM. NOTED		
STRUCTURE NOTATNS CHKD		
NOTE BOOK NO.		

MODEL: Default
FILE NAME: Fd861-078 VoS McConnor Parkway\CADD Sheets\Contract 02 CADD Sheets\11_Drainage and Utilities\22-00142-02-PV_SHT_Drainage and Utilities_10.dgn

BLA, Inc.

USER NAME = jrodriguez	DESIGNED - JR	REVISED -
	DRAWN - JR	REVISED -
PLOT SCALE = 40.0000 ' / in.	CHECKED - GJE	REVISED -
PLOT DATE = 6/4/2025	DATE - 02/18/2025	REVISED -

STATE OF ILLINOIS
DEPARTMENT OF TRANSPORTATION

MCCONNOR PARKWAY RECONSTRUCTION
DRAINAGE AND UTILITIES PLAN & PROFILE

SCALE: 1" = 20' | SHEET 7 OF 14 SHEETS | STA. 54+50 TO STA. 58+50

F.A.U. RTE.	SECTION	COUNTY	TOTAL SHEETS	SHEET NO.
7008	22-00142-02-PV	COOK	245	112

CONTRACT NO. 61L38

ILLINOIS FED. AID PROJECT

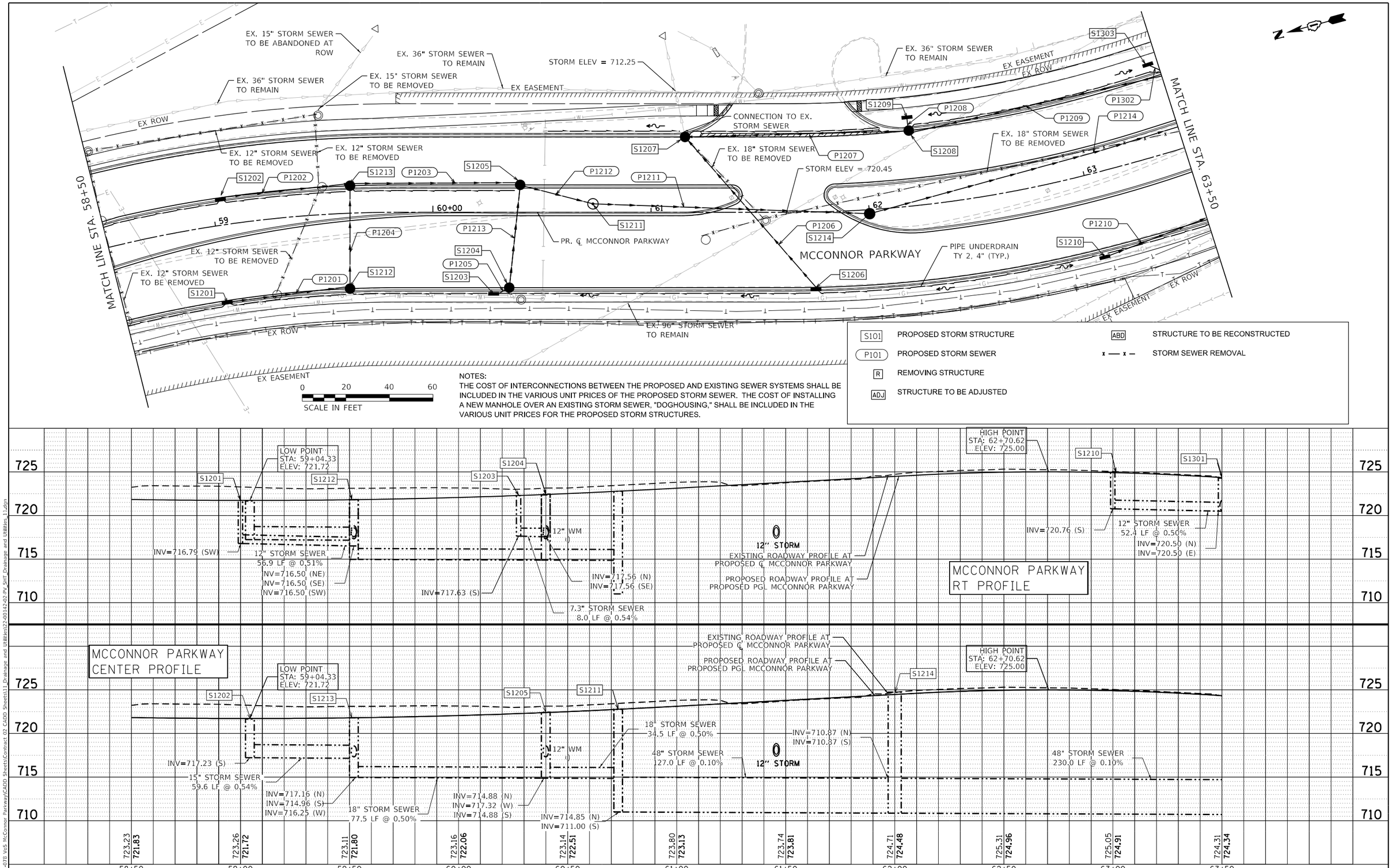

NOTES:
THE COST OF INTERCONNECTIONS BETWEEN THE PROPOSED AND EXISTING SEWER SYSTEMS SHALL BE INCLUDED IN THE VARIOUS UNIT PRICES OF THE PROPOSED STORM SEWER. THE COST OF INSTALLING A NEW MANHOLE OVER AN EXISTING STORM SEWER, "DOGHOUSING," SHALL BE INCLUDED IN THE VARIOUS UNIT PRICES FOR THE PROPOSED STORM STRUCTURES.

PLAN	BY	DATE
SURVEYED		
PLOTTED		
ALIGNMENT CHECKED		
RT. OF WAY CHECKED		
CADD FILE NAME		
NOTE BOOK		
NO.		

PROFILE	BY	DATE
SURVEYED		
PLOTTED		
GRADES CHECKED		
BM. NOTED		
STRUCTURE NOTATNS CHKD		
NOTE BOOK		
NO.		

MODEL: Default
FILE NAME: F:\061-078 VoS McConnor Parkway\CADD Sheets\Contract 02 CADD Sheets\11_Drainage and Utilities\22-00142-02-PV_SHT_Drainage and Utilities_11.dgn

BLA, Inc.

USER NAME = jrodriguez	DESIGNED - JR	REVISED -
	DRAWN - JR	REVISED -
PLOT SCALE = 40.0000 ' / in.	CHECKED - GJE	REVISED -
PLOT DATE = 6/4/2025	DATE - 02/18/2025	REVISED -

STATE OF ILLINOIS
DEPARTMENT OF TRANSPORTATION

MCCONNOR PARKWAY RECONSTRUCTION
DRAINAGE AND UTILITIES PLAN & PROFILE

SCALE: 1" = 20' | SHEET 8 OF 14 SHEETS | STA. 58+50 TO STA. 63+50

F.A.U. RTE.	SECTION	COUNTY	TOTAL SHEETS	SHEET NO.
7008	22-00142-02-PV	COOK	245	113

CONTRACT NO. 61L38

ILLINOIS FED. AID PROJECT

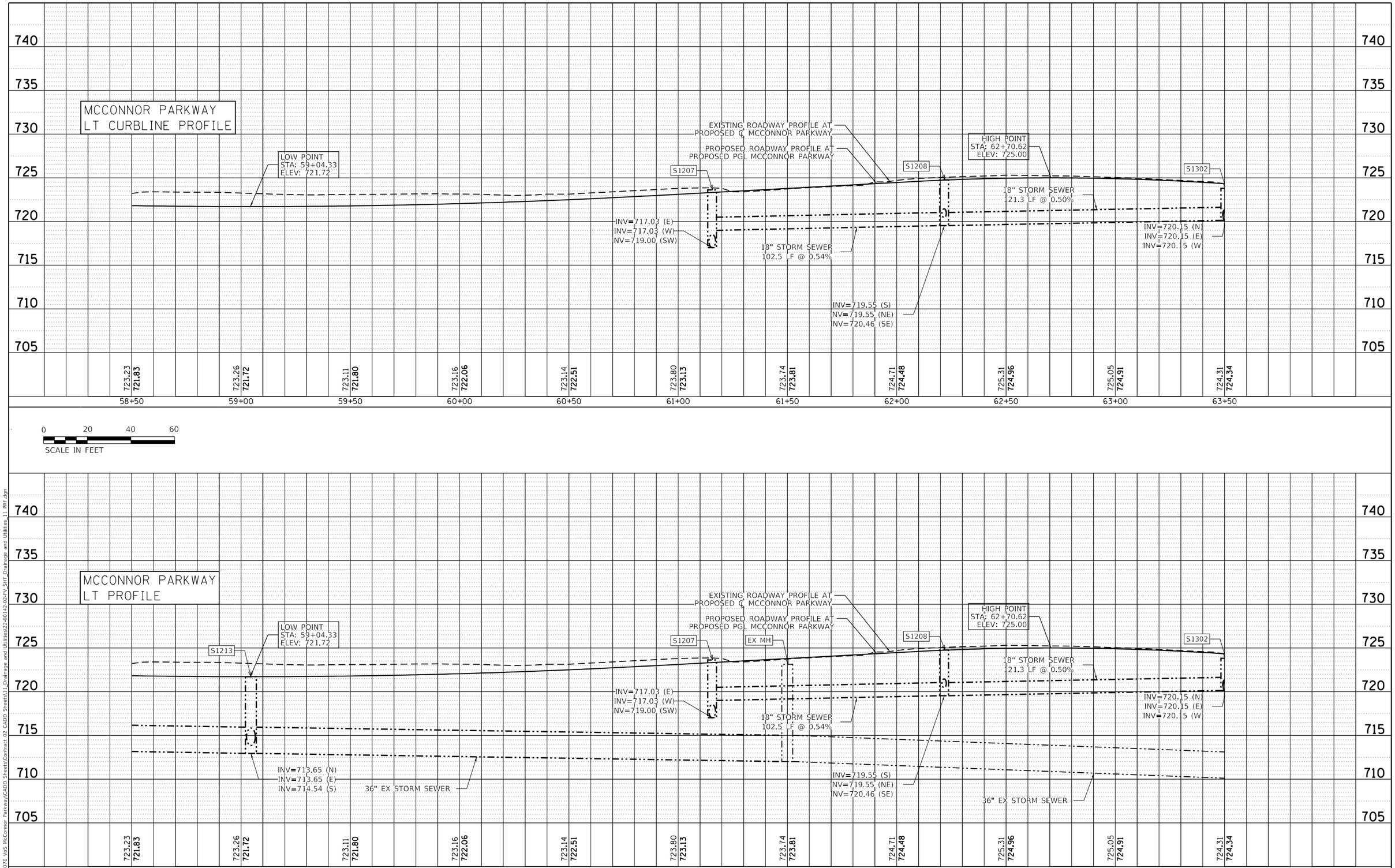

PLAN	BY	DATE
SURVEYED		
PLOTTED		
ALIGNMENT CHECKED		
RT. OF WAY CHECKED		
CADD FILE NAME		
NOTE BOOK NO.		

PROFILE	BY	DATE
SURVEYED		
PLOTTED		
GRADES CHECKED		
B.M. NOTED		
STRUCTURE NOTATNS CHKD		
NOTE BOOK NO.		

MODEL: Default
FILE NAME: Fi861-078 VoS McConnor Parkway\CADD Sheets\Contract 02 CADD Sheets\11_Drainage and Utilities\22-00142-02-PV_SHT_Drainage and Utilities_11 PRF.dgn

BLA, Inc.

USER NAME = jrodriguez	DESIGNED - JR	REVISED -
	DRAWN - JR	REVISED -
PLOT SCALE = 40.0000 ' / in.	CHECKED - GJE	REVISED -
PLOT DATE = 6/4/2025	DATE - 02/18/2025	REVISED -

STATE OF ILLINOIS
DEPARTMENT OF TRANSPORTATION

MCCONNOR PARKWAY RECONSTRUCTION
DRAINAGE AND UTILITIES PLAN & PROFILE

SCALE: 1" = 20' | SHEET 9 OF 14 SHEETS | STA. 58+50 TO STA. 63+50

F.A.U. RTE.	SECTION	COUNTY	TOTAL SHEETS	SHEET NO.
7008	22-00142-02-PV	COOK	245	114
		CONTRACT NO. 61L38		
		ILLINOIS FED. AID PROJECT		

S101	PROPOSED STORM STRUCTURE
P101	PROPOSED STORM SEWER
R	REMOVING STRUCTURE
ADJ	STRUCTURE TO BE ADJUSTED
ABD	STRUCTURE TO BE RECONSTRUCTED
x — x —	STORM SEWER REMOVAL

NOTES:
THE COST OF INTERCONNECTIONS BETWEEN THE PROPOSED AND EXISTING SEWER SYSTEMS SHALL BE INCLUDED IN THE VARIOUS UNIT PRICES OF THE PROPOSED STORM SEWER. THE COST OF INSTALLING A NEW MANHOLE OVER AN EXISTING STORM SEWER, "DOGHOUSING," SHALL BE INCLUDED IN THE VARIOUS UNIT PRICES FOR THE PROPOSED STORM STRUCTURES.

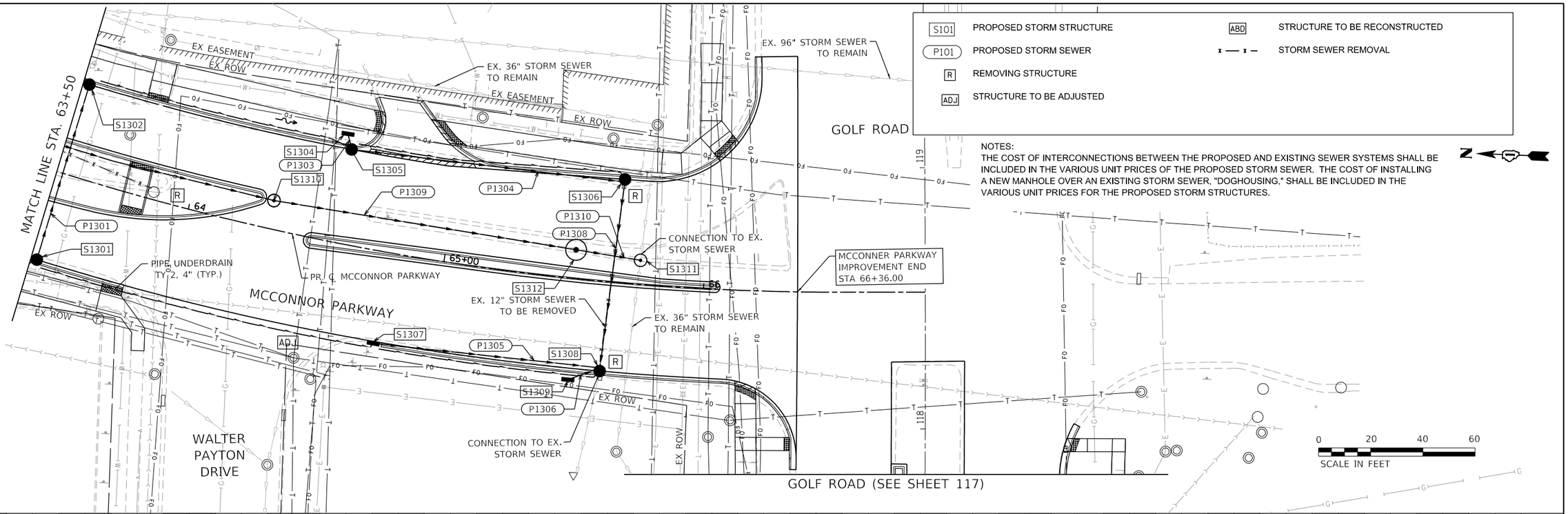

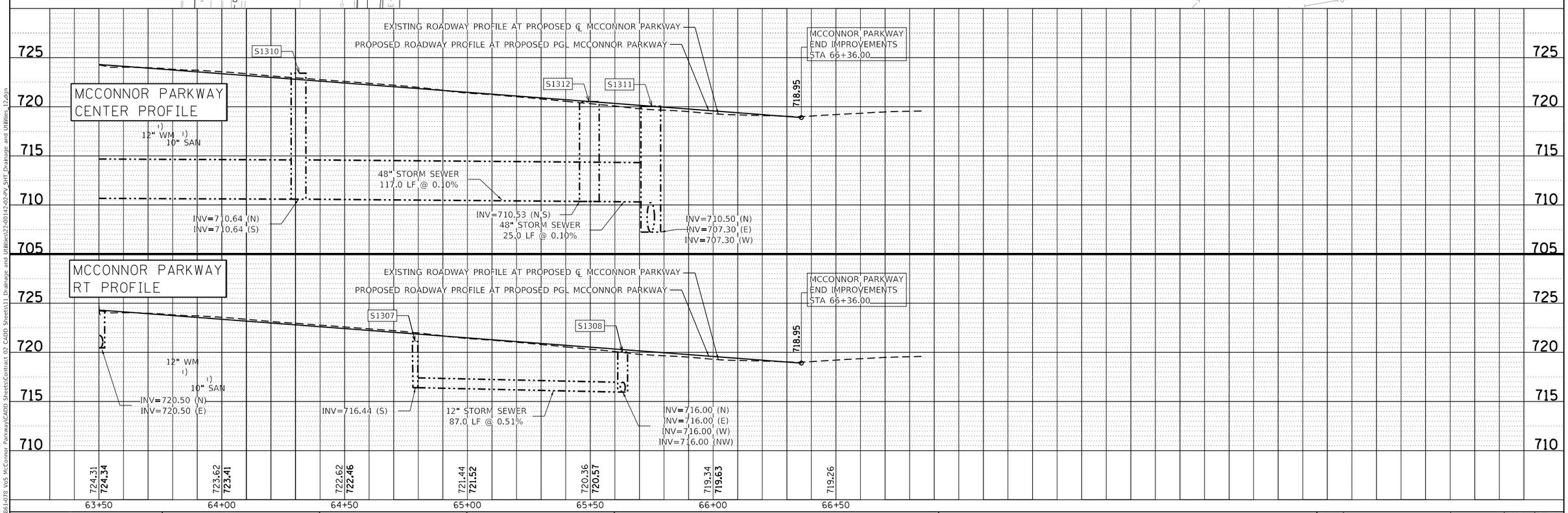

PLAN		BY	DATE
SURVEYED			
PLOTTED			
ALIGNMENT CHECKED			
RT. OF WAY CHECKED			
CADD FILE NAME			
NOTE BOOK NO.			

PROFILE		BY	DATE
SURVEYED			
PLOTTED			
ALIGNMENT CHECKED			
BM. NOTED			
STRUCTURE NOTATNS CHKD			
NOTE BOOK NO.			

MODEL: Default
FILE NAME: Fy861-078 VoS McConnor Parkway\CADD Sheets\Contract 02 CADD Sheets\11 Drainage and Utilities\22-00142-02-PV_SHT_Drainage and Utilities_12.dgn

BLA, Inc.

USER NAME = jrodriguez	DESIGNED - JR	REVISED -
	DRAWN - JR	REVISED -
PLOT SCALE = 40.0000 ' / in.	CHECKED - GJE	REVISED -
PLOT DATE = 6/4/2025	DATE - 02/18/2025	REVISED -

STATE OF ILLINOIS
DEPARTMENT OF TRANSPORTATION

MCCONNOR PARKWAY RECONSTRUCTION
DRAINAGE AND UTILITIES PLAN & PROFILE

SCALE: 1" = 20' | SHEET 10 OF 14 SHEETS | STA. 63+50 TO STA. 67+00

F.A.U. RTE.	SECTION	COUNTY	TOTAL SHEETS	SHEET NO.
7008	22-00142-02-PV	COOK	245	115

CONTRACT NO. 61L38

ILLINOIS FED. AID PROJECT

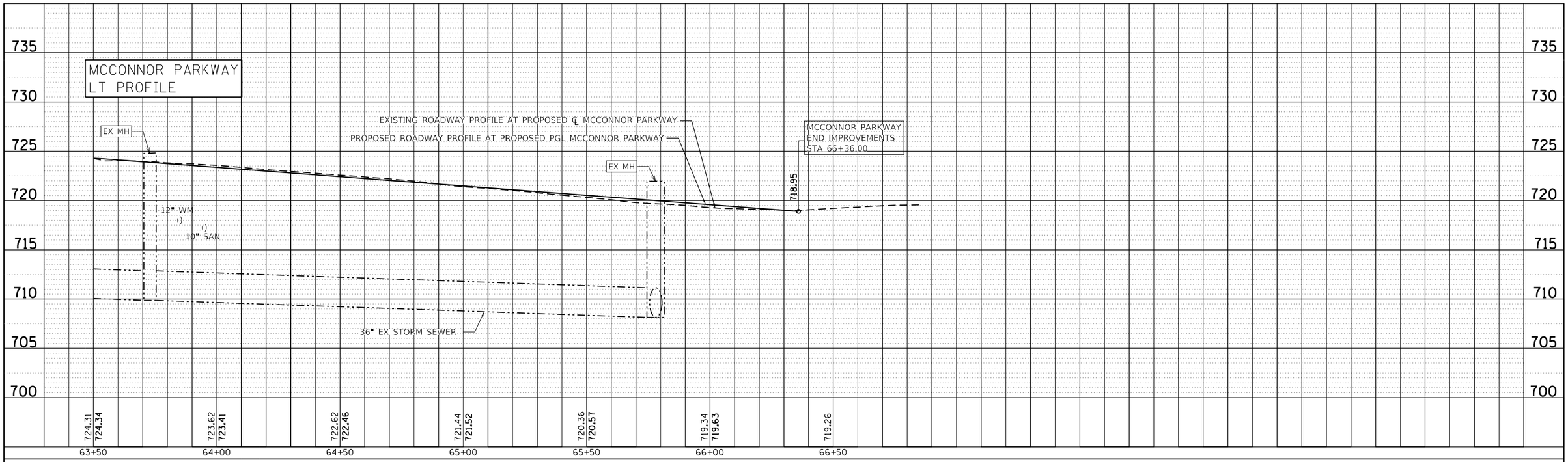

0 20 40 60
SCALE IN FEET

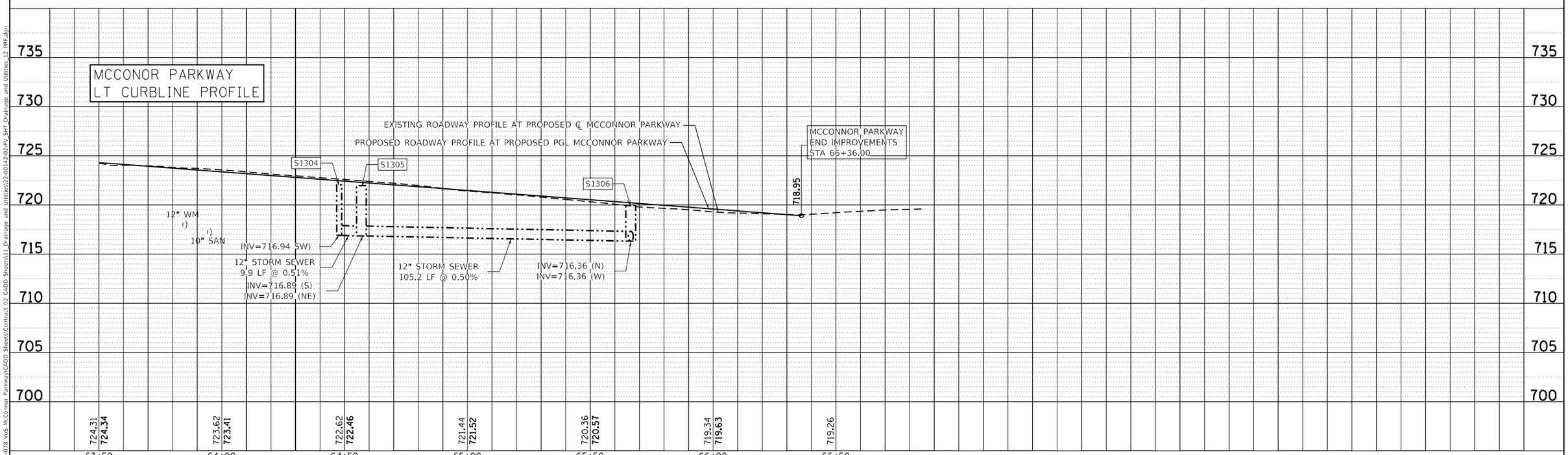

PLAN	BY	DATE
SURVEYED		
PLOTTED		
ALIGNMENT CHECKED		
RT. OF WAY CHECKED		
CADD FILE NAME		
NOTE BOOK NO.		

PROFILE	BY	DATE
SURVEYED		
PLOTTED		
GRADES CHECKED		
BLM. NOTED		
STRUCTURE NOTATNS CHKD		
NOTE BOOK NO.		

MODEL: Default
FILE NAME: Fi861-078 Vos McConnor Parkway\CADD Sheets\Contract 02 CADD Sheets\11_Drainage and Utilities\22-00142-02-PV_SHT_Drainage and Utilities_12 PRF.dgn

BLA, Inc.

USER NAME = jrodriguez	DESIGNED - JR	REVISED -
	DRAWN - JR	REVISED -
PLOT SCALE = 40.0000 ' / in.	CHECKED - GJE	REVISED -
PLOT DATE = 6/4/2025	DATE - 02/18/2025	REVISED -

STATE OF ILLINOIS
DEPARTMENT OF TRANSPORTATION

MCCONNOR PARKWAY RECONSTRUCTION
DRAINAGE AND UTILITIES PLAN & PROFILE

SCALE: 1" = 20' | SHEET 11 OF 14 SHEETS | STA. 63+50 TO STA. 67+00

F.A.U. RTE.	SECTION	COUNTY	TOTAL SHEETS	SHEET NO.
7008	22-00142-02-PV	COOK	245	116
		CONTRACT NO. 61L38		
		ILLINOIS FED. AID PROJECT		

S101	PROPOSED STORM STRUCTURE
P101	PROPOSED STORM SEWER
R	REMOVING STRUCTURE
ADJ	STRUCTURE TO BE ADJUSTED
ABD	STRUCTURE TO BE RECONSTRUCTED
x — x —	STORM SEWER REMOVAL

NOTES:
THE COST OF INTERCONNECTIONS BETWEEN THE PROPOSED AND EXISTING SEWER SYSTEMS SHALL BE INCLUDED IN THE VARIOUS UNIT PRICES OF THE PROPOSED STORM SEWER. THE COST OF INSTALLING A NEW MANHOLE OVER AN EXISTING STORM SEWER, "DOGHOUSING," SHALL BE INCLUDED IN THE VARIOUS UNIT PRICES FOR THE PROPOSED STORM STRUCTURES.

REFER TO SCHEDULE OF QUANTITIES SHEETS FOR PAVEMENT PATCHING LOCATIONS

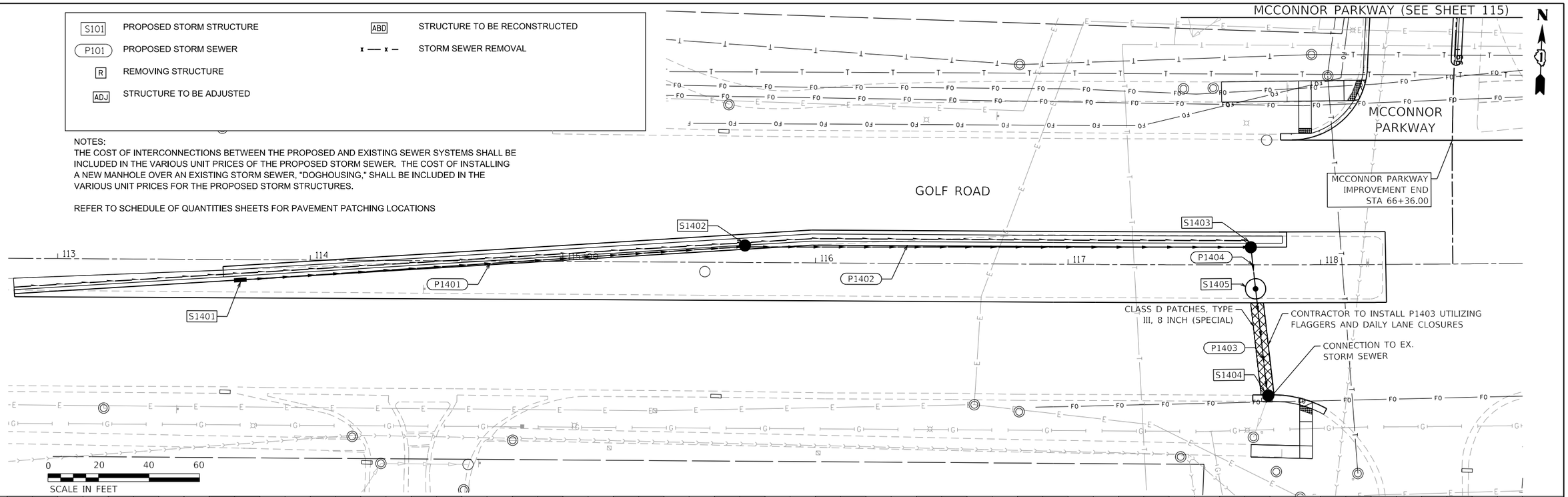

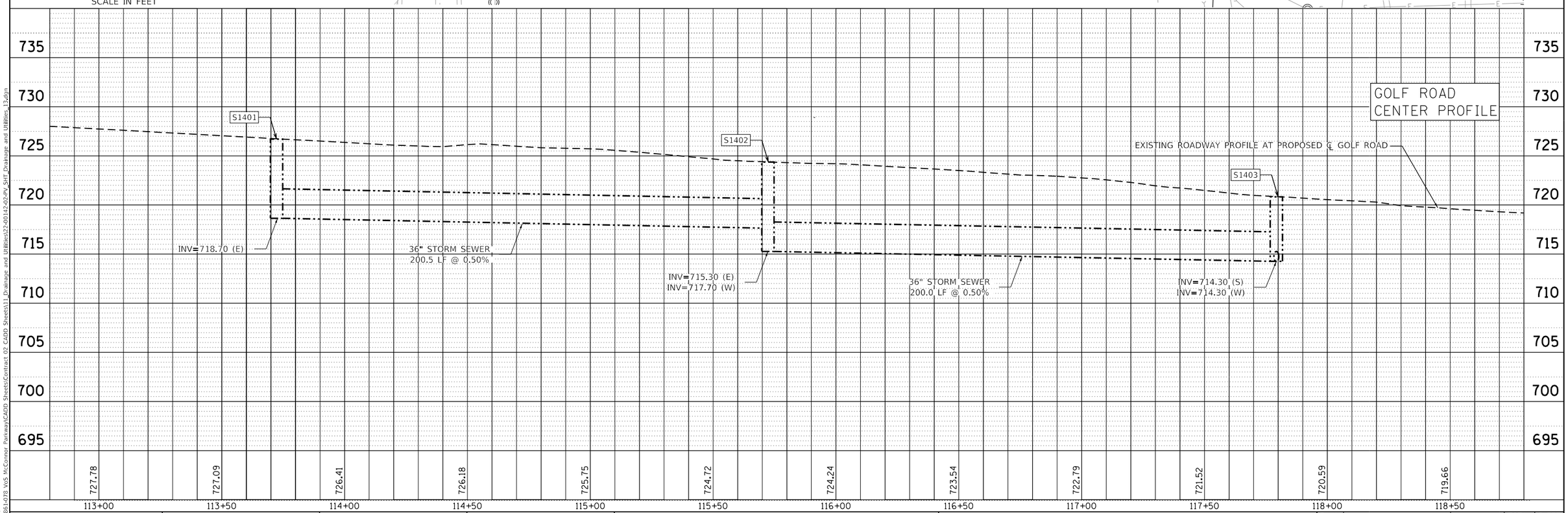

PLAN		BY	DATE
SURVEYED			
PLOTTED			
ALIGNMENT CHECKED			
RT. OF WAY CHECKED			
CADD FILE NAME			
NOTE BOOK			
NO.			

PROFILE		BY	DATE
SURVEYED			
PLOTTED			
ALIGNMENT CHECKED			
BM. NOTED			
STRUCTURE NOTATNS CHKD			
NOTE BOOK			
NO.			

MODEL: Default
FILE NAME: F:\861-078 VoS McConnor Parkway\CADD Sheets\Contract 02 CADD Sheets\11_Drainage and Utilities\22-00142-02-PV_SHT_Drainage and Utilities_13.dgn

BLA, Inc.

USER NAME = jrodriguez	DESIGNED - JR	REVISED -
	DRAWN - JR	REVISED -
PLOT SCALE = 40.0000 ' / in.	CHECKED - GJE	REVISED -
PLOT DATE = 6/4/2025	DATE - 02/18/2025	REVISED -

STATE OF ILLINOIS
DEPARTMENT OF TRANSPORTATION

MCCONNOR PARKWAY RECONSTRUCTION
DRAINAGE AND UTILITIES PLAN & PROFILE

SCALE: 1" = 20' | SHEET 12 OF 14 SHEETS | STA. 113+00 TO STA. 118+75

F.A.U. RTE.	SECTION	COUNTY	TOTAL SHEETS	SHEET NO.
7008	22-00142-02-PV	COOK	245	117

CONTRACT NO. 61L38

ILLINOIS FED. AID PROJECT

PROPOSED DRAINAGE STRUCTURE TABLE

STRUCT. NO.	STATION	OFFSET	TYPE	FRAME AND GRATE OR LID	RIM ELEV (FT)	INVERT ELEVATIONS							
						NORTH	EAST	SOUTH	WEST	NE	SE	SW	NW
S701	37+00.00	34.58 RT	INLET, TYPE A, 2'-DIA	TYPE 11	733.88	-	-	-	-	729.90	-	-	-
S702	37+00.00	34.58 LT	CATCH BASIN, TYPE A, 4'-DIA	TYPE 11	733.88	-	-	-	-	729.55	-	729.55	-
S703	37+00.00	41.55 LT	CATCH BASIN, TYPE A, 4'-DIA	TYPE 8	733.42	-	-	-	-	-	724.54	729.51	724.54
S704	38+94.00	4.96 LT	INLET, TYPE A, 2'-DIA	TYPE 11	731.24	726.21	-	-	-	-	-	-	-
S705	38+80.00	35.03 LT	CATCH BASIN, TYPE A, 4'-DIA	TYPE 11	731.34	-	-	726.05	-	726.05	-	-	-
S706	38+80.00	40.80 LT	CATCH BASIN, TYPE A, 5'-DIA	TYPE 8	731.18	-	-	-	-	-	721.83	726.02	722.19

PROPOSED DRAINAGE PIPE TABLE

PIPE NO.	STRUCTURE		DESCRIPTION	CLASS	TYPE	DIA. (IN)	LENGTH (FT)	SLOPE (%)	START ELEV (FT)	STOP ELEV (FT)	TBF
	FROM	TO									
P701	S701	S702	STORM SEWERS-RCP	A	2	12	68.3	0.51	729.90	729.55	13.2
P702	S702	S703	STORM SEWERS-RCP	A	2	15	8.0	0.50	729.55	729.51	1.5
P703	S705	S706	STORM SEWERS-RCP	A	2	15	6.8	0.44	726.05	726.02	2.2
P704	S707	S708	STORM SEWERS-RCP	A	2	12	44.8	0.45	726.25	726.05	5.9
P705	S704	S705	STORM SEWERS-RCP	A	2	12	31.5	0.51	726.21	726.05	9.4

PROPOSED DRAINAGE STRUCTURE TABLE

STRUCT. NO.	STATION	OFFSET	TYPE	FRAME AND GRATE OR LID	RIM ELEV (FT)	INVERT ELEVATIONS							
						NORTH	EAST	SOUTH	WEST	NE	SE	SW	NW
S801	40+20.32	43.75 LT	CATCH BASIN, TYPE A, 5'-DIA	TYPE 8	729.25	-	720.44	-	-	-	-	725.95	720.75
S802	42+17.63	10.91 RT	INLET, TYPE A, 2'-DIA	TYPE 11	727.39	722.60	-	-	-	-	-	-	-
S803	42+19.17	34.58 LT	CATCH BASIN, TYPE A, 4'-DIA	TYPE 11	726.66	722.38	-	722.38	-	-	-	-	-
S804	44+00.00	12.58 RT	INLET, TYPE A, 2'-DIA	TYPE 11	726.08	722.37	-	-	-	-	-	-	-
S805	44+00.00	34.58 LT	CATCH BASIN, TYPE A, 4'-DIA	TYPE 11	725.39	-	722.14	722.14	-	-	-	-	-
S806	42+19.86	42.92 LT	MANHOLE, TYPE A, 5'-DIA	TYPE 1 CL	727.00	-	719.65	722.34	719.65	-	-	-	-

PROPOSED DRAINAGE PIPE TABLE

PIPE NO.	STRUCTURE		DESCRIPTION	CLASS	TYPE	DIA. (IN)	LENGTH (FT)	SLOPE (%)	START ELEV (FT)	STOP ELEV (FT)	TBF
	FROM	TO									
P801	S708	S801	STORM SEWERS-RCP	A	2	15	22.0	0.46	726.05	725.95	2.2
P802	S802	S803	STORM SEWERS-RCP	A	2	12	44.5	0.49	722.60	722.38	10.5
P803	S804	S805	STORM SEWERS-RCP	A	2	12	45.8	0.50	722.37	722.14	6.0
P804	S805	S902	STORM SEWERS-RCP	A	2	15	121.2	0.53	722.14	721.50	12.0
P805	S803	S806	STORM SEWERS-RCP	A	2	15	8.0	0.50	722.38	722.34	1.9

PROPOSED DRAINAGE STRUCTURE TABLE

STRUCT. NO.	STATION	OFFSET	TYPE	FRAME AND GRATE OR LID	RIM ELEV (FT)	INVERT ELEVATIONS							
						NORTH	EAST	SOUTH	WEST	NE	SE	SW	NW
S901	45+20.41	34.58 RT	INLET, TYPE A, 2'-DIA	TYPE 11	725.48	721.88	-	-	-	-	-	-	-
S902	45+22.35	34.58 LT	CATCH BASIN, TYPE A, 4'-DIA	TYPE 11	725.04	721.50	-	721.50	721.50	-	-	-	-
S903	47+00.00	34.58 RT	INLET, TYPE A, 2'-DIA	TYPE 11	724.28	720.27	-	-	-	-	-	-	-
S904	47+00.00	4.48 LT	CATCH BASIN, TYPE A, 4'-DIA	TYPE 11	724.04	720.18	-	720.18	-	-	-	-	-
S905	47+00.00	43.41 LT	CATCH BASIN, TYPE A, 5'-DIA	TYPE 8	724.89	-	716.54	719.98	716.54	-	-	-	-
S906	49+00.00	34.58 RT	INLET, TYPE A, 2'-DIA	TYPE 11	723.08	-	717.80	-	-	-	-	-	-
S907	49+00.00	12.58 LT	CATCH BASIN, TYPE A, 4'-DIA	TYPE 11	723.08	-	716.55	717.55	-	-	-	-	-
S908	49+75.46	12.58 LT	CATCH BASIN, TYPE A, 5'-DIA	TYPE 11	722.88	716.15	716.15	-	716.15	-	-	-	-
S909	49+75.56	40.65 LT	MANHOLE, TYPE A, 6'-DIA	TYPE 1 CL	723.83	715.67	715.67	716.00	715.67	-	-	-	-
S910	45+21.70	43.43 LT	MANHOLE, TYPE A, 5'-DIA	TYPE 1 CL	725.70	-	-	-	718.13	718.13	721.46	-	-

PROPOSED DRAINAGE PIPE TABLE

PIPE NO.	STRUCTURE		DESCRIPTION	CLASS	TYPE	DIA. (IN)	LENGTH (FT)	SLOPE (%)	START ELEV (FT)	STOP ELEV (FT)	TBF
	FROM	TO									
P901	S901	S902	STORM SEWERS-RCP	A	2	12	74.1	0.51	721.88	721.50	9.8
P902	S903	S904	STORM SEWERS-RCP	A	2	12	37.4	0.24	720.27	720.18	6.5
P903	S904	S905	STORM SEWERS-RCP	A	2	15	39.2	0.51	720.18	719.98	8.4
P904	S907	S908	STORM SEWERS-RCP	A	2	15	76.8	0.52	716.55	716.15	57.2
P905	S908	S909	STORM SEWERS-RCP	A	2	24	26.1	0.57	716.15	716.00	23.2
P906	S1002	S908	STORM SEWERS-RCP	A	2	24	109.2	0.50	716.70	716.15	74.6
P907	S906	S907	STORM SEWERS-RCP	A	2	12	47.1	0.74	717.80	717.55	16.1
P908	S902	S911	STORM SEWERS-RCP	A	2	15	8.0	0.50	721.50	721.46	1.3

PROPOSED DRAINAGE STRUCTURE TABLE

STRUCT. NO.	STATION	OFFSET	TYPE	FRAME AND GRATE OR LID	RIM ELEV (FT)	INVERT ELEVATIONS							
						NORTH	EAST	SOUTH	WEST	NE	SE	SW	NW
S1001	50+51.23	34.59 RT	CATCH BASIN, TYPE A, 4'-DIA	TYPE 11	721.83	-	716.95	-	-	716.95	-	-	-
S1002	50+51.23	12.58 LT	CATCH BASIN, TYPE A, 5'-DIA	TYPE 11	722.60	-	-	-	716.70	-	-	716.70	-
S1003	52+21.35	34.58 RT	INLET, TYPE A, 2'-DIA	TYPE 11	723.18	-	-	-	-	717.65	-	-	-
S1004	52+19.50	12.58 LT	CATCH BASIN, TYPE A, 4'-DIA	TYPE 11	723.40	717.40	-	-	-	-	717.40	717.40	-
S1005	53+30.50	12.58 LT	CATCH BASIN, TYPE A, 4'-DIA	TYPE 11	723.58	-	-	-	-	-	717.98	-	717.98
S1006	52+10.94	62.57 LT	MANHOLE, TYPE A, 6'-DIA	TYPE 1 CL	722.00	-	-	-	-	715.02	715.02	717.02	715.02
S1007	54+40.45	34.58 RT	INLET, TYPE A, 2'-DIA	TYPE 11	723.63	-	718.80	-	-	-	-	-	-
S1008	54+40.48	12.58 LT	CATCH BASIN, TYPE A, 4'-DIA	TYPE 11	723.75	-	-	-	718.55	-	-	-	718.55

PROPOSED DRAINAGE PIPE TABLE

PIPE NO.	STRUCTURE		DESCRIPTION	CLASS	TYPE	DIA. (IN)	LENGTH (FT)	SLOPE (%)	START ELEV (FT)	STOP ELEV (FT)	TBF
	FROM	TO									
P1001	S1001	S1002	STORM SEWERS-RCP	A	2	24	47.2	0.53	716.95	716.70	15.2
P1002	S1003	S1004	STORM SEWERS-RCP	A	2	12	49.0	0.51	717.65	717.40	17.7
P1003	S1004	S1006	STORM SEWERS-RCP	A	2	18	74.8	0.51	717.40	717.02	26.8
P1005	S1007	S1005	STORM SEWERS-RCP	A	2	15	112.0	0.51	718.55	717.98	39.4
P1004	S1005	S1004	STORM SEWERS-RCP	A	2	15	112.0	0.51	717.98	717.40	44.6
P1006	S1007	S1008	STORM SEWERS-RCP	A	2	12	48.9	0.51	718.80	718.55	9.5

PROPOSED DRAINAGE STRUCTURE TABLE

STRUCT. NO.	STATION	OFFSET	TYPE	FRAME AND GRATE OR LID	RIM ELEV (FT)	INVERT ELEVATIONS							
						NORTH	EAST	SOUTH	WEST	NE	SE	SW	NW
S1101	56+21.35	34.58 RT	INLET, TYPE A, 2'-DIA	TYPE 11	722.03	-	718.00	-	-	-	-	-	-
S1102	56+20.01	1.58 LT	CATCH BASIN, TYPE A, 4'-DIA	TYPE 11	722.37	-	-	714.61	717.80	-	-	-	-
S1103	57+00.00	34.58 RT	INLET, TYPE A, 2'-DIA	TYPE 11	722.43	-	718.79	-	-	-	-	-	-
S1104	57+00.00	2.64 LT	CATCH BASIN, TYPE A, 5'-DIA	TYPE 11	722.16	714.52	714.52	-	718.60	-	-	-	-
S1105	57+00.00	43.87 LT	MANHOLE, TYPE A, 5'-DIA	TYPE 1 CL	722.00	713.72	-	713.72	714.32	-	-	-	-

PROPOSED DRAINAGE PIPE TABLE

PIPE NO.	STRUCTURE		DESCRIPTION	CLASS	TYPE	DIA. (IN)	LENGTH (FT)	SLOPE (%)	START ELEV (FT)	STOP ELEV (FT)	TBF
	FROM	TO									
P1101	S1101	S1102	STORM SEWERS-RCP	A	2	12	38.8	0.52	718.00	717.80	8.3
P1102	S1102	S1104	STORM SEWERS-RCP	A	2	15	76.5	0.50	714.90	714.52	67.5
P1103	S1103	S1104	STORM SEWERS-RCP	A	2	12	38.3	0.50	718.79	718.60	5.0
P1104	S1104	S1105	STORM SEWERS-RCP	A	2	18	40.2	0.50	714.52	714.32	39.0

PROPOSED DRAINAGE STRUCTURE TABLE

STRUCT. NO.	STATION	OFFSET	TYPE	FRAME AND GRATE OR LID	RIM ELEV (FT)	INVERT ELEVATIONS							
						NORTH	EAST	SOUTH	WEST	NE	SE	SW	NW
S1201	59+00.00	34.58 RT	INLET, TYPE A, 2'-DIA	TYPE 11	721.75	-	-	-	-	-	-	716.79	-
S1202	59+04.33	12.58 LT	INLET, TYPE A, 2'-DIA	TYPE 11	721.66	-	-	714.73	-	-	-	-	-
S1203	60+27.66	37.17 RT	INLET, TYPE A, 2'-DIA	TYPE 8	722.28	-	-	717.63	-	-	-	-	-
S1204	60+35.06	34.58 RT	CATCH BASIN, TYPE A, 4'-DIA	TYPE 11	722.36	717.56	-	-	-	-	717.56	-	-
S1205	60+40.00	12.58 LT	CATCH BASIN, TYPE A, 4'-DIA	TYPE 11	722.40	714.88	-	714.88	717.32	-	-	-	-
S1206	61+75.00	34.58 RT	INLET, TYPE A, 2'-DIA	TYPE 11	723.13	-	717.38	-	-	-	-	-	-
S1207	61+15.59	34.58 LT	CATCH BASIN, TYPE A, 4'-DIA	TYPE 11	723.63	-	717.03	-	717.03	-	-	719.00	-
S1208	62+21.71	34.58 LT	CATCH BASIN, TYPE A, 4'-DIA	TYPE 11	724.77	-	-	719.55	-	719.55	720.46	-	-
S1209	62+21.71	40.67 LT	INLET, TYPE A, 2'-DIA	TYPE 8	724.60	-	720.50	-	-	-	-	-	720.50
S1210	63+00.00	38.74 RT	INLET, TYPE A, 2'-DIA	TYPE 8	724.92	-	-	720.76	-	-	-	-	-
S1211	60+73.37	3.87 RT	MANHOLE, TYPE A, 6'-DIA	TYPE 1 CL	722.78	714.85	-	711.00	-	-	-	-	-
S1212	59+60.51	34.58 RT	CATCH BASIN, TYPE A, 4'-DIA	TYPE 11	721.80	-	-	-	-	716.50	716.50	716.50	-
S1213	59+52.00	12.58 LT	CATCH BASIN, TYPE A, 4'-DIA	TYPE 11	721.80	717.16	-	714.96	716.25	-	-	-	-
S1214	62+00.00	1.90 RT	MANHOLE, TYPE A, 6'-DIA	TYPE 1 CL	724.75	710.87	-	710.87	-	-	-	-	-

PROPOSED DRAINAGE PIPE TABLE

PIPE NO.	STRUCTURE		DESCRIPTION	CLASS	TYPE	DIA. (IN)	LENGTH (FT)	SLOPE (%)	START ELEV (FT)	STOP ELEV (FT)	TBF
	FROM	TO									
P1201	S1201	S1212	STORM SEWERS-RCP	A	2	12	56.9	0.51	716.79	716.50	17.0
P1202	S1202	S1213	STORM SEWERS-RCP	A	2	15	59.6	0.54	717.23	717.16	24.3
P1203	S1213	S1205	STORM SEWERS-RCP	A	2	18	77.5	0.50	714.96	714.88	30.8
P1204	S1212	S1213	STORM SEWERS-RCP	A	2	15	47.2	0.50	717.56	717.32	14.4
P1205	S1203	S1204	STORM SEWERS-RCP	A	2	12	7.3	0.50	717.63	717.56	3.8
P1206	S1206	S1207	STORM SEWERS-RCP	A	2	12	92.6	0.50	717.38	717.03	43.7
P1207	S1208	S1207	STORM SEWERS-RCP	A	2	18	102.5	0.54	719.55	719.00	26.2
P1208	S1209	S1208	STORM SEWERS-RCP	A	2	12	7.6	0.53	720.50	720.46	1.3
P1209	S1302	S1208	STORM SEWERS-RCP	A	2	18	121.3	0.50	720.15	719.55	21.8
P1210	S1210	S1301	STORM SEWERS-RCP	A	2	12	52.4	0.50	720.76	720.50	11.3
P1211	S1211	S1214	STORM SEWERS-RCP	A	2	48	127.0	0.10	711.00	710.87	155.7
P1212	S1205	S1211	STORM SEWERS-RCP	A	3	18	34.5	0.50	714.88	714.85	32.4
P1213	S1204	S1205	STORM SEWERS-RCP	A	4	15	46.4	0.50	717.56	717.32	13.1
P1214	S1214	S1313	STORM SEWERS-RCP	A	2	48	230.0	0.10	710.87	710.64	575.7
									TOTAL		971.6

PROPOSED DRAINAGE STRUCTURE TABLE

STRUCT. NO.	STATION	OFFSET	TYPE	FRAME AND GRATE OR LID	RIM ELEV (FT)	INVERT ELEVATIONS							
						NORTH	EAST	SOUTH	WEST	NE	SE	SW	NW
S1301	63+50.37	34.53 RT	CATCH BASIN, TYPE A, 4'-DIA	TYPE 11	724.28	720.50	720.50	-	-	-	-	-	-
S1302	63+50.37	35.42 LT	CATCH BASIN, TYPE A, 4'-DIA	TYPE 11	723.82	720.15	720.16	-	720.15	-	-	-	-
S1303	63+50.37	41.50 LT	INLET, TYPE A, 2'-DIA	TYPE 8	723.88	-	-	-	720.20	-	-	-	-
S1304	64+47.82	41.41 LT	INLET, TYPE A, 2'-DIA	TYPE 8	722.09	-	-	-	-	-	-	716.94	-
S1305	64+56.87	36.19 LT	CATCH BASIN, TYPE A, 4'-DIA	TYPE 11	722.00	-	-	716.89	-	716.89	-	-	-
S1306	65+66.46	39.60 LT	CATCH BASIN, TYPE A, 4'-DIA	TYPE 11	719.98	716.36	-	-	716.36	-	-	-	-
S1307	64+78.85	34.40 RT	INLET, TYPE A, 2'-DIA	TYPE 11	721.16	-	-	716.44	-	-	-	-	-
S1308	65+63.22	34.32 RT	CATCH BASIN, TYPE A, 4'-DIA	TYPE 11	720.08	716.00	716.00	-	716.00	-	-	-	716.00
S1309	65+51.85	38.74 RT	INLET, TYPE A, 2'-DIA	TYPE 8	720.30	-	-	-	-	-	716.06	-	-
S1310	64+31.30	10.90 LT	MANHOLE, TYPE A, 6'-DIA	TYPE 1 CL	723.46	710.64	-	710.64	-	-	-	-	-
S1311	65+75.08	9.21 LT	MANHOLE, TYPE A, 8'-DIA	TYPE 1 CL	720.10	710.50	707.30	-	707.30	-	-	-	-
S1312	65+49.85	10.99 LT	RESTRICTOR MH W/6.5'x2' ORIFICE, TYPE A,	TYPE 1 CL (2)	720.36	710.53	-	710.53	-	-	-	-	-

PROPOSED DRAINAGE STRUCTURE TABLE

STRUCT. NO.	STATION	OFFSET	TYPE	FRAME AND GRATE OR LID	RIM ELEV (FT)	INVERT ELEVATIONS							
						NORTH	EAST	SOUTH	WEST	NE	SE	SW	NW
S1401	113+72.34	8.90 RT	CATCH BASIN, TYPE A, 5'-DIA	TYPE 11	726.45	-	718.70	-	-	-	-	-	-
S1402	115+72.42	5.15 LT	CATCH BASIN, TYPE A, 5'-DIA	TYPE 11	724.22	-	715.30	-	717.70	-	-	-	-
S1403	117+72.42	7.00 LT	MANHOLE, TYPE A, 7'-DIA	TYPE 11	720.62	-	-	714.30	714.30	-	-	-	-
S1404	117+79.32	51.36 RT	CATCH BASIN, TYPE A, 4'-DIA	TYPE 24	720.10	714.00	-	714.00	-	-	-	-	-
S1405	117+74.25	9.47 RT	RESTRICTOR MH W/4"ORIFICE, TYPE A, 6'-DIA	TYPE 1 CL (2)	720.62	714.22	-	714.22	-	-	-	-	-

PROPOSED DRAINAGE PIPE TABLE

PIPE NO.	STRUCTURE		DESCRIPTION	CLASS	TYPE	DIA. (IN)	LENGTH (FT)	SLOPE (%)	START ELEV (FT)	STOP ELEV (FT)	TBF
	FROM	TO									
P1301	S1301	S1302	STORM SEWERS-RCP	A	2	15	67.9	0.52	720.50	720.15	9.7
P1302	S1303	S1302	STORM SEWERS-RCP	A	2	12	8.0	0.50	720.20	720.16	1.2
P1303	S1304	S1305	STORM SEWERS-RCP	A	2	12	9.9	0.51	716.94	716.89	2.9
P1304	S1305	S1306	STORM SEWERS-RCP	A	2	12	105.2	0.50	716.89	716.36	22.6
P1305	S1307	S1308	STORM SEWERS-RCP	A	2	12	87.0	0.51	716.44	716.00	18.7
P1306	S1309	S1308	STORM SEWERS-RCP	A	2	12	12.9	0.47	716.06	716.00	2.5
P1308	S1306	S1308	STORM SEWERS-RCP	A	2	12	72.0	0.50	716.36	716.00	12.5
P1309	S1310	S1312	STORM SEWERS-RCP	A	2	48	117.0	0.10	710.64	710.53	228.0
P1310	S1312	S1311	STORM SEWERS-RCP	A	2	48	25.0	0.10	710.53	710.50	47.0
									TOTAL		345.1

PROPOSED DRAINAGE PIPE TABLE

PIPE NO.	STRUCTURE		DESCRIPTION	CLASS	TYPE	DIA. (IN)	LENGTH (FT)	SLOPE (%)	START ELEV (FT)	STOP ELEV (FT)	TBF
	FROM	TO									
P1401	S1401	S1402	STORM SEWERS-RCP	A	2	36	200.5	0.50	718.70	717.70	282.5
P1402	S1402	S1403	STORM SEWERS-RCP	A	2	36	200.0	0.50	715.30	714.30	192.8
P1403	S1405	S1404	STORM SEWERS-RCP	A	2	12	42.0	0.50	714.22	714.00	39.9
P1404	S1403	S1405	STORM SEWERS-RCP	A	2	36	16.0	0.50	714.30	714.22	20.0
									TOTAL		535.2

MCCONNER PARKWAY PIPE UNDERDRAIN TABLE

FROM		TO		DESCRIPTION	LENGTH (FT)
STA	OFF	STA	OFF		
36+60.00	37.20 LT	37+00.00	34.58 LT	PIPE UNDERDRAIN TYPE 2, 4" (TYP.)	57.0
37+00.00	34.58 LT	38+80.00	35.03 LT	PIPE UNDERDRAIN TYPE 2, 4" (TYP.)	174.7
38+80.00	35.03 LT	40+00.00	34.58 LT	PIPE UNDERDRAIN TYPE 2, 4" (TYP.)	106.4
40+00.00	34.58 LT	42+19.17	34.58 LT	PIPE UNDERDRAIN TYPE 2, 4" (TYP.)	204.7
42+19.17	34.58 LT	44+00.00	34.58 LT	PIPE UNDERDRAIN TYPE 2, 4" (TYP.)	169.0
44+00.00	34.58 LT	45+22.35	34.58 LT	PIPE UNDERDRAIN TYPE 2, 4" (TYP.)	119.9
36+30.00	37.20 RT	37+00.00	34.58 RT	PIPE UNDERDRAIN TYPE 2, 4" (TYP.)	72.2
37+00.00	34.58 RT	38+94.00	4.96 LT	PIPE UNDERDRAIN TYPE 2, 4" (TYP.)	229.3
38+94.00	10.00 LT	40+00.00	11.93 RT	PIPE UNDERDRAIN TYPE 2, 4" (TYP.)	109.6
40+00.00	11.93 RT	42+17.63	10.91 RT	PIPE UNDERDRAIN TYPE 2, 4" (TYP.)	219.2
42+17.63	10.91 RT	44+00.00	12.58 RT	PIPE UNDERDRAIN TYPE 2, 4" (TYP.)	183.4
44+00.00	12.58 RT	45+20.41	34.58 RT	PIPE UNDERDRAIN TYPE 2, 4" (TYP.)	145.8
45+20.41	34.58 RT	47+00.00	34.58 RT	PIPE UNDERDRAIN TYPE 2, 4" (TYP.)	173.7
47+00.00	34.58 RT	49+00.00	34.58 RT	PIPE UNDERDRAIN TYPE 2, 4" (TYP.)	185.8
49+00.00	34.58 RT	49+53.87	38.70 RT	PIPE UNDERDRAIN TYPE 2, 4" (TYP.)	48.1
49+53.87	38.70 RT	50+51.23	34.59 RT	PIPE UNDERDRAIN TYPE 2, 4" (TYP.)	89.2
45+20.00	01.00 RT	47+00.00	4.48 LT	PIPE UNDERDRAIN TYPE 2, 4" (TYP.)	178.7
47+00.00	4.48 LT	49+00.00	12.58 LT	PIPE UNDERDRAIN TYPE 2, 4" (TYP.)	203.4
49+00.00	12.58 LT	49+75.46	12.58 LT	PIPE UNDERDRAIN TYPE 2, 4" (TYP.)	75.3
49+75.46	12.58 LT	50+51.23	12.58 LT	PIPE UNDERDRAIN TYPE 2, 4" (TYP.)	76.5
53+60.00	37.20 RT	52+21.35	34.58 RT	PIPE UNDERDRAIN TYPE 2, 4" (TYP.)	128.0
52+21.35	34.58 RT	50+51.23	34.59 RT	PIPE UNDERDRAIN TYPE 2, 4" (TYP.)	157.5
53+60.00	10.00 LT	52+19.50	12.58 LT	PIPE UNDERDRAIN TYPE 2, 4" (TYP.)	150.2
52+19.50	12.58 LT	50+51.23	12.58 LT	PIPE UNDERDRAIN TYPE 2, 4" (TYP.)	170.5
53+60.00	37.20 RT	54+40.45	34.58 RT	PIPE UNDERDRAIN TYPE 2, 4" (TYP.)	77.9
54+40.45	34.58 RT	56+21.35	34.58 RT	PIPE UNDERDRAIN TYPE 2, 4" (TYP.)	167.8
56+21.35	34.58 RT	57+00.00	34.58 RT	PIPE UNDERDRAIN TYPE 2, 4" (TYP.)	71.3
53+60.00	10.00 LT	54+40.48	12.58 LT	PIPE UNDERDRAIN TYPE 2, 4" (TYP.)	75.9
54+40.48	12.58 LT	56+20.01	1.58 LT	PIPE UNDERDRAIN TYPE 2, 4" (TYP.)	186.4
57+70.00	37.20 RT	57+00.00	34.58 RT	PIPE UNDERDRAIN TYPE 2, 4" (TYP.)	67.5
57+70.00	03.00 LT	57+00.00	2.64 LT	PIPE UNDERDRAIN TYPE 2, 4" (TYP.)	69.5
57+00.00	2.64 LT	56+20.01	1.58 LT	PIPE UNDERDRAIN TYPE 2, 4" (TYP.)	79.4
57+70.00	37.20 RT	59+00.00	34.58 RT	PIPE UNDERDRAIN TYPE 2, 4" (TYP.)	116.0
57+70.00	03.00 LT	59+04.33	12.58 LT	PIPE UNDERDRAIN TYPE 2, 4" (TYP.)	138.7
62+50.00	37.20 RT	61+75.00	34.58 RT	PIPE UNDERDRAIN TYPE 2, 4" (TYP.)	80.7
61+75.00	34.58 RT	60+40.00	34.58 RT	PIPE UNDERDRAIN TYPE 2, 4" (TYP.)	134.7
60+40.00	34.58 RT	59+52.00	34.58 RT	PIPE UNDERDRAIN TYPE 2, 4" (TYP.)	77.2
59+52.00	34.58 RT	59+00.00	34.58 RT	PIPE UNDERDRAIN TYPE 2, 4" (TYP.)	54.9
62+50.00	37.20 LT	61+15.59	34.58 LT	PIPE UNDERDRAIN TYPE 2, 4" (TYP.)	89.6
61+15.59	34.58 LT	60+50.00	38.97 LT	PIPE UNDERDRAIN TYPE 2, 4" (TYP.)	63.8
60+40.00	12.58 LT	59+52.00	12.58 LT	PIPE UNDERDRAIN TYPE 2, 4" (TYP.)	76.7
59+52.00	12.58 LT	59+04.33	12.58 LT	PIPE UNDERDRAIN TYPE 2, 4" (TYP.)	58.4
62+50.00	37.20 RT	63+00.00	38.74 RT	PIPE UNDERDRAIN TYPE 2, 4" (TYP.)	53.7
63+00.00	38.74 RT	63+50.37	34.53 RT	PIPE UNDERDRAIN TYPE 2, 4" (TYP.)	51.7
63+50.37	34.53 RT	64+78.85	34.40 RT	PIPE UNDERDRAIN TYPE 2, 4" (TYP.)	132.0
64+78.85	34.40 RT	65+63.22	34.32 RT	PIPE UNDERDRAIN TYPE 2, 4" (TYP.)	86.3
62+31.93	34.59 LT	62+50.03	37.17 LT	PIPE UNDERDRAIN TYPE 2, 4" (TYP.)	27.2
62+50.00	37.20 LT	63+50.37	35.42 LT	PIPE UNDERDRAIN TYPE 2, 4" (TYP.)	95.2
63+50.37	35.42 LT	64+47.82	41.41 LT	PIPE UNDERDRAIN TYPE 2, 4" (TYP.)	93.6
64+47.82	41.41 LT	65+66.46	39.60 LT	PIPE UNDERDRAIN TYPE 2, 4" (TYP.)	104.3
112+82.78	11.39 RT	115+71.91	6.81 LT	PIPE UNDERDRAIN TYPE 2, 4" (TYP.)	290.1
115+71.91	6.81 LT	117+72.08	8.58 LT	PIPE UNDERDRAIN TYPE 2, 4" (TYP.)	200.3
				TOTAL	6249.0

EX. DRAINAGE PIPE REMOVAL TABLE

ALIGN	FROM		TO		DESCRIPTION	LENGTH (FT)	TBF
	STATION	OFFSET	STATION	OFFSET			
MCCONNER	37+49.80	34.6 RT	37+49.20	41.7 LT	12"	76.3	58.0
MCCONNER	38+94.33	4.90 LT	38+80.44	34.41 LT	12"	33.2	3.7
MCCONNER	38+80.44	34.41 LT	38+80.49	40.80 LT	12"	6.4	4.9
MCCONNER	42+17.41	11.93 RT	42+18.20	34.6 LT	12"	44.6	3.2
MCCONNER	44+50.10	12.2 RT	45+22.30	34.6 LT	12"	86.7	6.2
MCCONNER	47+00.00	35.63 RT	47+00.00	8.7 LT	12"	43.9	4.9
MCCONNER	47+00.00	8.7 LT	47+00.00	11.48 LT	12"	3.2	0.6
MCCONNER	47+00.00	11.48 LT	47+00.00	43.4 LT	12"	31.9	8.9
MCCONNER	50+39.80	12.6 LT	50+00.00	34.6 RT	12"	61.5	4.4
MCCONNER	50+00.00	34.6 RT	49+75.60	39.7 LT	12"	75.0	49.8
MCCONNER	55+50.00	34.6 RT	55+50.00	0	12"	34.6	3.4
MCCONNER	55+50.00	0	55+50.00	12.2 LT	12"	12.2	0.0
MCCONNER	55+50.00	12.2 LT	55+37.00	54.6 LT	12"	44.2	8.6
MCCONNER	58+50.00	34.6 RT	58+50.00	12.1 LT	12"	47.4	4.4
MCCONNER	58+50.00	12.1 LT	58+50.00	45.3 LT	12"	33.2	7.8
MCCONNER	58+50.00	45.3 LT	59+48.70	45.9 LT	12"	106.0	33.9
MCCONNER	59+24.20	34.6 RT	59+48.50	12.6 LT	12"	54.0	5.0
MCCONNER	59+48.50	12.6 LT	59+48.70	45.9 LT	12"	34.8	8.9
MCCONNER	59+48.72	45.96 LT	59+73.92	91.03 LT	15"	44.9	0.0
MCCONNER	63+85.60	2.9 LT	61+51.60	3.8 RT	18"	231.4	35.9
MCCONNER	61+25.00	12.8 RT	61+51.60	3.8 RT	12"	29.6	4.5
MCCONNER	61+51.60	3.8 RT	61+15.60	34.6 LT	18"	51.8	19.8
MCCONNER	65+66.25	38.65 LT	65+63.09	35.35 RT	12"	74.1	9.8

EX. DRAINAGE STRUCTURE ADJUSTMENT TABLE

ALIGN	STATION	OFFSET	DESCRIPTION
MCCONNER	37+49.20	41.7 LT	MANHOLE
MCCONNER	64+50.94	46.4 RT	MANHOLE

EX. DRAINAGE STRUCTURE REMOVAL TABLE

ALIGN	STATION	OFFSET	DESCRIPTION
MCCONNER	37+49.80	34.6 RT	CATCH BASIN
MCCONNER	38+80.50	40.7 LT	MANHOLE
MCCONNER	38+80.50	34.4 LT	CATCH BASIN
MCCONNER	38+94.03	4.3 LT	CATCH BASIN
MCCONNER	40+21.20	43.8 LT	MANHOLE
MCCONNER	42+18.20	34.6 LT	CATCH BASIN
MCCONNER	42+19.80	42.9 LT	MANHOLE
MCCONNER	44+50.10	12.2 RT	CATCH BASIN
MCCONNER	45+22.30	34.6 LT	CATCH BASIN
MCCONNER	47+00.00	8.7 LT	CATCH BASIN
MCCONNER	47+00.00	12.2 LT	MANHOLE
MCCONNER	47+00.00	43.4 LT	MANHOLE
MCCONNER	50+39.80	12.6 LT	CATCH BASIN
MCCONNER	50+00.00	34.6 RT	CATCH BASIN
MCCONNER	49+75.60	39.7 LT	MANHOLE
MCCONNER	55+50.00	34.6 RT	CATCH BASIN
MCCONNER	55+50.00	0	CATCH BASIN
MCCONNER	55+50.00	12.2 LT	CATCH BASIN
MCCONNER	58+50.00	34.6 RT	CATCH BASIN
MCCONNER	58+50.00	12.1 LT	CATCH BASIN
MCCONNER	58+50.00	45.3 LT	MANHOLE
MCCONNER	59+24.20	34.6 RT	CATCH BASIN
MCCONNER	59+48.50	12.6 LT	CATCH BASIN
MCCONNER	59+48.70	45.9 LT	MANHOLE
MCCONNER	59+75.21	84.47 LT	FLARED END SECTION
MCCONNER	61+15.60	34.6 LT	CATCH BASIN
MCCONNER	61+25.00	12.8 RT	CATCH BASIN
MCCONNER	61+51.60	3.8 RT	MANHOLE
MCCONNER	63+85.60	2.9 LT	CATCH BASIN
MCCONNER	65+66.23	38.1 LT	INLET
MCCONNER	65+63.5	35.76 RT	INLET

MCCONNER PARKWAY EXISTING CONNECTIONS TABLE

STA	OFF	FROM	TO	INVERT ELEV	DIRECTION
37+00.00	41.55 LT	S703	EX 15" RCP	724.54	SE
38+80.00	40.80 LT	EX 15" RCP	S706	722.19	NW
38+80.00	40.80 LT	S706	EX 24" RCP	721.83	SE
40+20.32	43.75 LT	EX 24" RCP	S801	720.75	NW
40+20.32	43.75 LT	S801	EX 30" RCP	720.44	EAST
42+19.86	42.92 LT	EX 30" RCP	S806	719.65	WEST
42+19.86	42.92 LT	S806	EX 30" RCP	719.65	EAST
45+21.70	43.43 LT	EX 30" RCP	S911	718.13	WEST
45+21.70	43.43 LT	S911	EX 30" RCP	718.13	NE
47+00.00	43.41 LT	EX 30" RCP	S905	716.54	WEST
47+00.00	43.41 LT	S905	EX 36" RCP	716.54	EAST
49+75.56	40.65 LT	EX 36" RCP	S910	715.67	WEST
49+75.56	40.65 LT	EX 30" RCP	S910	715.67	NORTH
49+75.56	40.65 LT	S910	EX 24" RCP	715.67	EAST
52+10.94	62.57 LT	EX 24" RCP	S1005	715.02	NW
52+10.94	62.57 LT	EX 15" RCP	S1005	715.02	NE
52+10.94	62.57 LT	S1005	EX 30" RCP	715.02	SE
57+00.00	43.87 LT	EX 36" RCP	S1105	713.72	NORTH
57+00.00	43.87 LT	S1105	EX 36" RCP	713.72	SOUTH
59+04.33	55.23 LT	EX 36" RCP	S1214	713.65	NORTH
59+04.33	55.23 LT	S1214	EX 36" RCP	713.65	SOUTH
61+15.59	34.58 LT	S1208	EX 18" RCP	717.03	EAST
65+63.22	34.32 RT	S1308	EX 12" RCP	716.00	WEST
117+79.32	51.36 RT	S1311	EX 12" RCP	714.00	SOUTH
65+74.66	.27 LT	EX 36" RCP	S1312	707.4	EAST
65+74.66	.27 LT	S1312	EX 36" RCP	707.4	WEST
			TOTAL		26

F.A.U. RTE.	SECTION	COUNTY	TOTAL SHEETS	SHEET NO.
7008	22-00142-01-PV & -02-PV	COOK	7	1
SCHAUMBURG	ILLINOIS	CONTRACT NO.		

STATE OF ILLINOIS
DEPARTMENT OF TRANSPORTATION
DIVISION OF HIGHWAYS

FOR INDEX OF SHEETS, SEE SHEET NO. 2

PLAT OF HIGHWAYS

FAU ROUTE 7008
SECTION 22–00142–01–PV & 22–00142–02–PV
COOK COUNTY
LIMITS: 9 + 03.35 TO 66 + 84.94 (McCONNOR PARKWAY)
20 + 00 TO 27 + 58.31 (N. ROOSEVELT BLVD)
JOB NO.: R–55–001–97

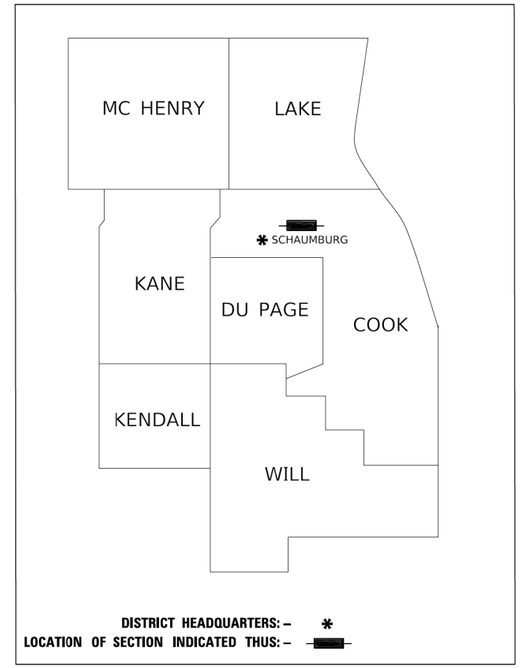

LOCATION MAP
(NOT TO SCALE)

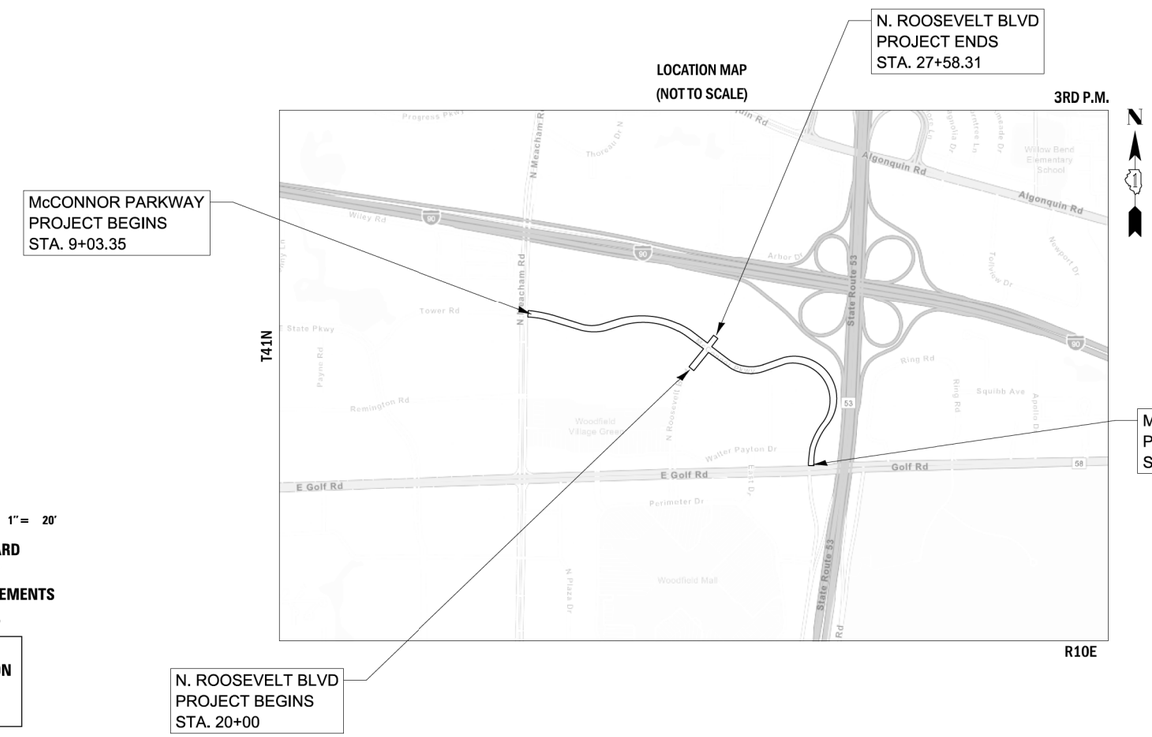

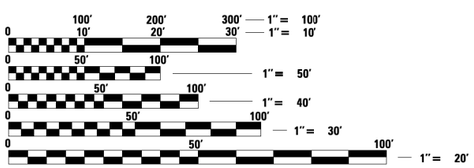

FULL SIZE PLANS HAVE BEEN PREPARED USING STANDARD ENGINEERING SCALES. REDUCED SIZED PLANS WILL NOT CONFORM TO STANDARD SCALES. IN MAKING MEASUREMENTS ON REDUCED PLANS, THE ABOVE SCALES MAY BE USED.

J.U.L.I.E.
JOINT UTILITY LOCATION INFORMATION FOR EXCAVATION
1–800–892–0123
OR 811

COMPASS SURVEYING LTD
2631 Ginger Woods Parkway,
Suite 100 Aurora IL 60502
PHONE: (630)820-9100
FAX: (630)820-7030

STATE OF ILLINOIS
DEPARTMENT OF TRANSPORTATION

SUBMITTED _____ 20 _____

_____
REGIONAL ENGINEER

_____ 20 _____

_____
ENGINEER OF DESIGN AND ENVIRONMENT

_____ 20 _____

_____
DIRECTOR OF PROGRAM DEVELOPMENT

PROJECT ENGINEER
PROJECT MANAGER

CONTRACT NO.

F.A.U. RTE.	SECTION	COUNTY	TOTAL SHEETS	SHEET NO.
7008	22-00142-02-PV	COOK	245	120
		CONTRACT NO.		
	ILLINOIS	FED. AID PROJECT		

PRINTED BY THE AUTHORITY OF THE STATE OF ILLINOIS

PARCEL NO.	TOTAL HOLDING ACRES	PART TAKING ACRES	AREA IN EXISTING R.O.W. ACRES	REMAINDER AREA ACRES	EASEMENT AREA		PERMANENT INDEX NUMBER
					ACRES	SQUARE FEET	
0004TE	2.8467				0.0250	1,087	07-12-402-012 08-07-301-011

NOTES:

1. ALL DIMENSIONS ARE MEASURED UNLESS OTHERWISE SPECIFIED.
2. BEARINGS AND DISTANCES SHOWN HEREON ARE THE ILLINOIS STATE PLANE COORDINATE SYSTEM, EAST ZONE, NORTH AMERICAN DATUM OF 1983 (2011 ADJUSTMENT) "GRID".
3. ALL MEASURED AND CALCULATED DISTANCES ARE "GRID"NOT "GROUND". TO OBTAIN GROUND DISTANCES, DIVIDE GRID DISTANCES BY THE COMBINED SCALE FACTOR OF 0.99995250.
4. AREAS SHOWN ON THIS PLAT A "GROUND".

0 20 40 60
SCALE IN FEET

N

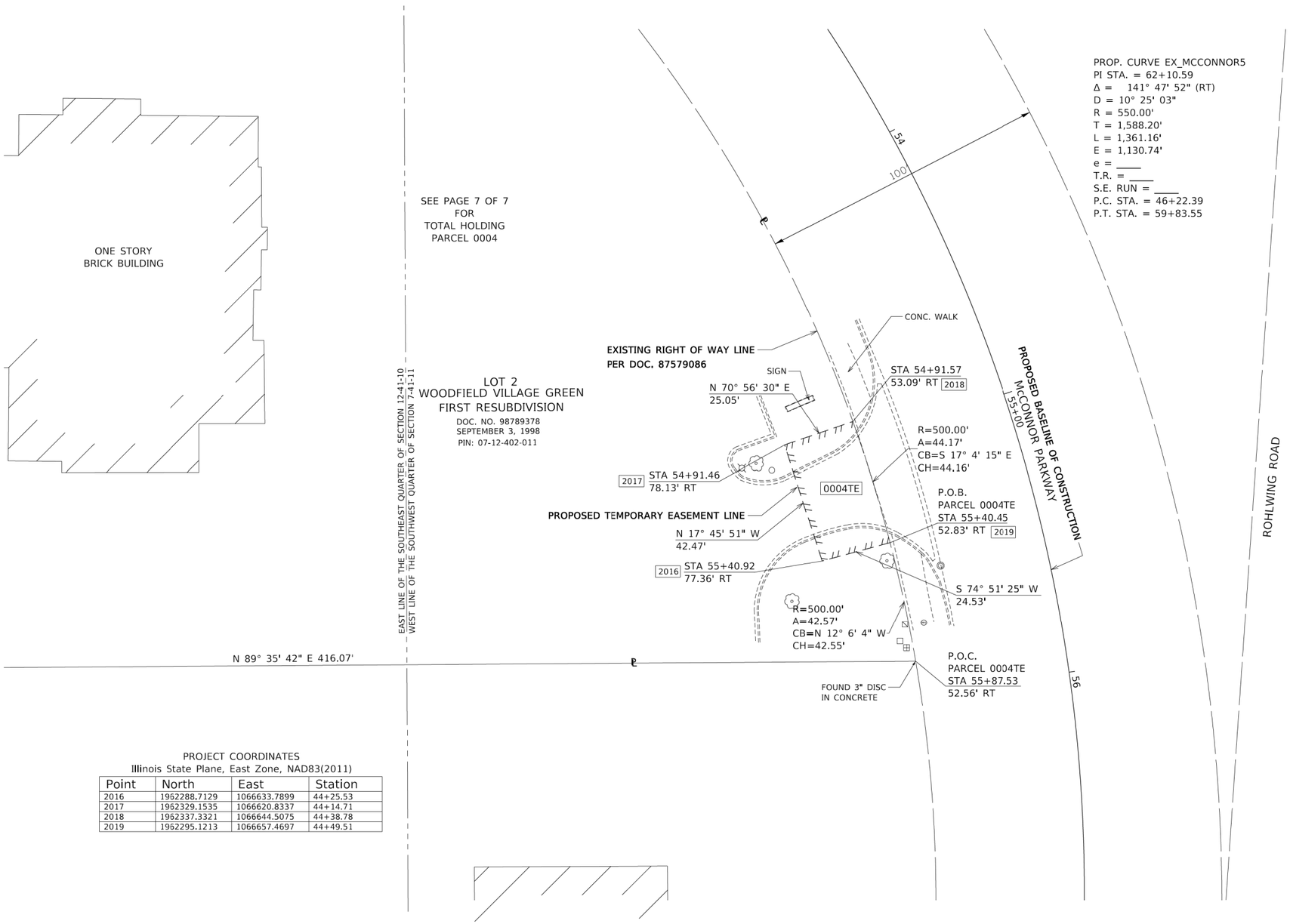

PROP. CURVE EX_MCCONNOR5
PI STA. = 62+10.59
Δ = 141° 47' 52" (RT)
D = 10° 25' 03"
R = 550.00'
T = 1,588.20'
L = 1,361.16'
E = 1,130.74'
e = ____
T.R. = ____
S.E. RUN = ____
P.C. STA. = 46+22.39
P.T. STA. = 59+83.55

PROJECT COORDINATES
Illinois State Plane, East Zone, NAD83(2011)

Point	North	East	Station
2016	1962288.7129	1066633.7899	44+25.53
2017	1962329.1535	1066620.8337	44+14.71
2018	1962337.3321	1066644.5075	44+38.78
2019	1962295.1213	1066657.4697	44+49.51

LEGEND

SECTION CORNER

QUARTER SECTION CORNER

SECTION / QUARTER SECTION LINE
PLATTED LOT LINES
PROPERTY (DEED) LINE
APPARENT PROPERTY LINE
EXISTING CENTERLINE
PROPOSED CENTERLINE
EXISTING RIGHT OF WAY LINE
PROPOSED RIGHT OF WAY LINE
EXISTING EASEMENT
PROPOSED EASEMENT
EXISTING ACCESS CONTROL LINE
PROPOSED ACCESS CONTROL LINE
129.32' MEASURED DIMENSION
129.32' (COMP) COMPUTED DIMENSION
(129.32') RECORDED DIMENSION
EXISTING BUILDING

IRON PIPE OR ROD FOUND
'MAG' NAIL SET
CUT CROSS FOUND OR SET
5 / 8" REBAR SET

STAKING OF PROPOSED RIGHT OF WAY. SET DIVISION OF HIGHWAYS SURVEY MARKER TO MONUMENT THE POSITION SHOWN. IDENTIFIED BY INSCRIPTION DATA AND SURVEYORS REGISTRATION NUMBER.

M STAKING OF PROPOSED RIGHT OF WAY IN CULTIVATED AREAS. BURIED 5/8 INCH METAL ROD 20 INCHES BELOW GROUND TO MARK FUTURE SURVEY MARKER POSITION IDENTIFIED BY COLORED PLASTIC CAP BEARING SURVEYORS REGISTRATION NUMBER.

RIGHT OF WAY STAKING PROPOSED TO BE SET

STATE OF ILLINOIS)
)SS
COUNTY OF KANE)

THIS IS TO CERTIFY THAT I, DOUGLAS McCLINTIC, AN ILLINOIS PROFESSIONAL LAND SURVEYOR, (WE, COMPASS SURVEYING, LTD. AN ILLINOIS PROFESSIONAL DESIGN FIRM LAND SURVEYING CORPORATION, NUMBER 184-002778,) HAVE SURVEYED THE PLAT OF HIGHWAYS SHOWN HEREON IN SECTION 12, TOWNSHIP 41 NORTH, RANGE 10 EAST OF THE THIRD PRINCIPAL MERIDIAN, COOK COUNTY, THAT THE SURVEY IS TRUE AND COMPLETE AS SHOWN TO THE BEST OF MY KNOWLEDGE AND BELIEF, THAT THE PLAT CORRECTLY REPRESENTS SAID SURVEY, THAT ALL MONUMENTS FOUND AND ESTABLISHED ARE OF PERMANENT QUALITY AND OCCUPY THE POSITIONS SHOWN THEREON AND THAT THE MONUMENTS ARE SUFFICIENT TO ENABLE THE SURVEY TO BE RETRACED, MADE FOR THE DEPARTMENT OF TRANSPORTATION, STATE OF ILLINOIS.

DATED AT AURORA, ILLINOIS THIS __ DAY OF _____ 20__ A.D.

ILLINOIS PROFESSIONAL LAND SURVEYOR NO. 2992
EXPIRES NOVEMBER 30, 2026
COMPASS SURVEYING, LTD
ILLINOIS PROFESSIONAL DESIGN FIRM LAND SURVEYING
CORPORATION NUMBER 184-002778
LICENSE EXPIRATION DATE: APRIL 30, 2025

THIS PROFESSIONAL SERVICE CONFORMS TO THE CURRENT ILLINOIS MINIMUM STANDARDS FOR A BOUNDARY SURVEY.

F.A.U. RTE.	SECTION	COUNTY	TOTAL SHEETS	SHEET NO.
7008	22-00142-02-PV	COOK	245	121
		CONTRACT NO.		
		ILLINOIS FED. AID PROJECT		

COMPASS SURVEYING LTD
2631 Ginger Woods Parkway,
Suite 100 Aurora IL 60502
PHONE: (630)820-9100
FAX: (630)820-7030

MODEL: Default
FILE NAME: F:\Compass\2024\24.0130\DGN\24.0130_SHEET5.dgn

USER NAME = rober	DESIGNED -	REVISED - 7/15/2024	ILLINOIS DEPARTMENT OF TRANSPORTATION PLAT OF HIGHWAYS
	DRAWN - B.TRAVER	REVISED - 7/22/2024	
PLOT SCALE = 20.0000 ' / in.	CHECKED - D.McCLINTIC	REVISED - 8/8/2024	
PLOT DATE = 8/20/2024	DATE -	REVISED - 8/20/2024	

ROUTE FAU 7008	SECTION 22-00142-02-PV	CCUNTY COOK	JOB# R-55-001-097
SEC 7	T 41N, R 11E OF 3RD P.M.	PROJECT# McConnor Parkway	
SCALE: 20'	SHEET NO. 4 OF 7 SHEETS	STA 54+00 TO STA 56+00	CONTRACT NO.

PARCEL NO.	TOTAL HOLDING ACRES	PART TAKING ACRES	AREA IN EXISTING R.O.W. ACRES	REMAINDER AREA ACRES	EASEMENT AREA		PERMANENT INDEX NUMBER
					ACRES	SQUARE FEET	
0004TE	2.8467				0.0250	1,087	07-12-402-012 08-07-301-011

NOTES:

1. ALL DIMENSIONS ARE MEASURED UNLESS OTHERWISE SPECIFIED.
2. BEARINGS AND DISTANCES SHOWN HEREON ARE THE ILLINOIS STATE PLANE COORDINATE SYSTEM, EAST ZONE, NORTH AMERICAN DATUM OF 1983 (2011 ADJUSTMENT) "GRID".
3. ALL MEASURED AND CALCULATED DISTANCES ARE "GRID"NOT "GROUND". TO OBTAIN GROUND DISTANCES, DIVIDE GRID DISTANCES BY THE COMBINED SCALE FACTOR OF 0.99995250.
4. AREAS SHOWN ON THIS PLAT A "GROUND".

0 40 80 120
SCALE IN FEET

N

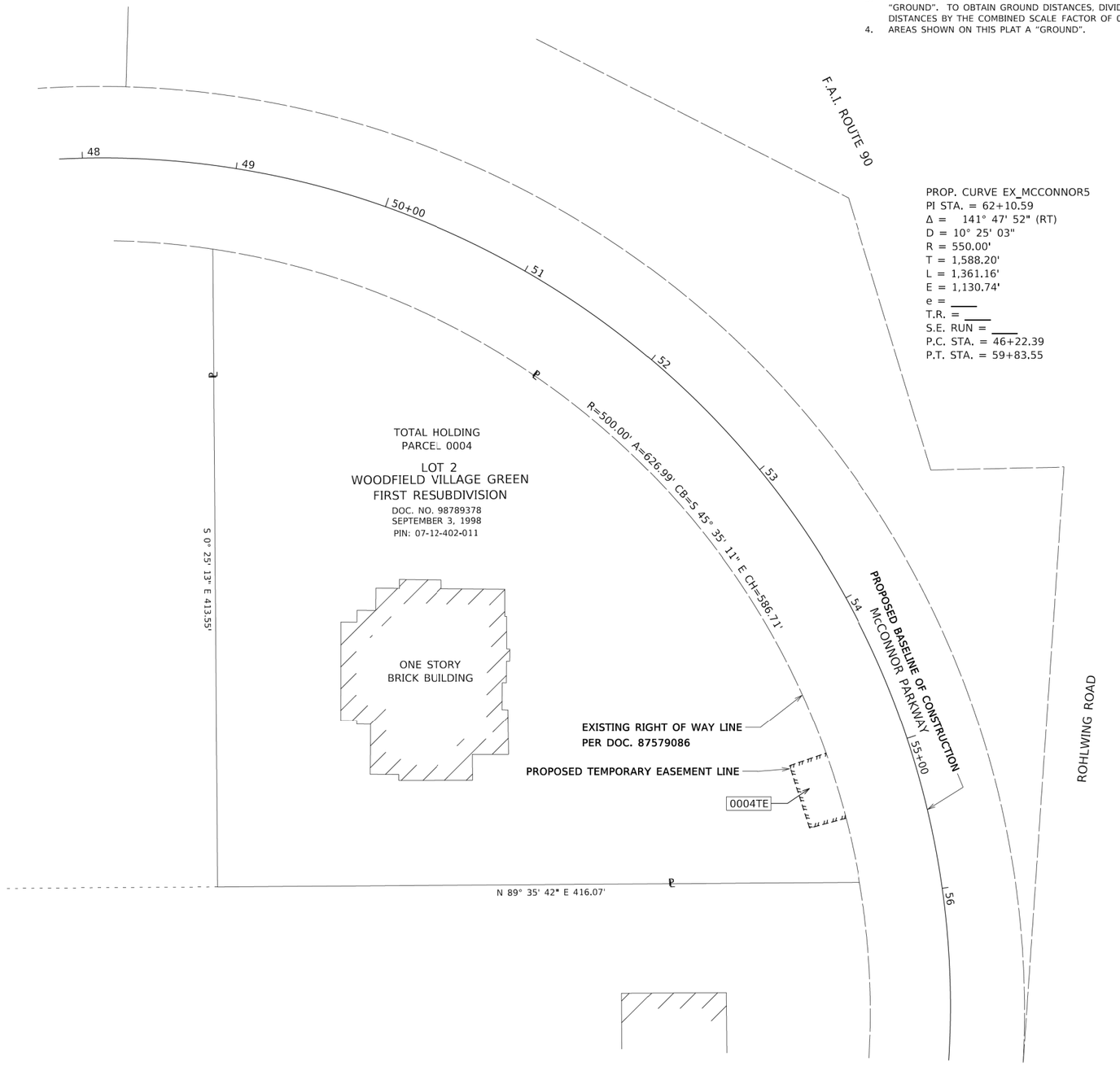

LEGEND

SECTION CORNER

QUARTER SECTION CORNER

	SECTION / QUARTER SECTION LINE
	PLATTED LOT LINES
P	PROPERTY (DEED) LINE
APL	APPARENT PROPERTY LINE
	EXISTING CENTERLINE
	PROPOSED CENTERLINE
	EXISTING RIGHT OF WAY LINE
	PROPOSED RIGHT OF WAY LINE
	EXISTING EASEMENT
	PROPOSED EASEMENT
AC	EXISTING ACCESS CONTROL LINE
AC	PROPOSED ACCESS CONTROL LINE
129.32'	MEASURED DIMENSION
129.32' (COMP)	COMPUTED DIMENSION
(129.32')	RECORDED DIMENSION
	EXISTING BUILDING

IRON PIPE OR ROD FOUND — 'MAG' NAIL SET

CUT CROSS FOUND OR SET — 5 / 8" REBAR SET

STAKING OF PROPOSED RIGHT OF WAY. SET DIVISION OF HIGHWAYS SURVEY MARKER TO MONUMENT THE POSITION SHOWN. IDENTIFIED BY INSCRIPTION DATA AND SURVEYORS REGISTRATION NUMBER.

M STAKING OF PROPOSED RIGHT OF WAY IN CULTIVATED AREAS. BURIED 5/8 INCH METAL ROD 20 INCHES BELOW GROUND TO MARK FUTURE SURVEY MARKER POSITION IDENTIFIED BY COLORED PLASTIC CAP BEARING SURVEYORS REGISTRATION NUMBER.

RIGHT OF WAY STAKING PROPOSED TO BE SET

STATE OF ILLINOIS)
)SS
COUNTY OF KANE)

THIS IS TO CERTIFY THAT I, DOUGLAS McCLINTIC, AN ILLINOIS PROFESSIONAL LAND SURVEYOR, (WE, COMPASS SURVEYING, LTD. AN ILLINOIS PROFESSIONAL DESIGN FIRM LAND SURVEYING CORPORATION, NUMBER 184-002778,) HAVE SURVEYED THE PLAT OF HIGHWAYS SHOWN HEREON IN SECTION 12, TOWNSHIP 41 NORTH, RANGE 10 EAST OF THE THIRD PRINCIPAL MERIDIAN, COOK COUNTY, THAT THE SURVEY IS TRUE AND COMPLETE AS SHOWN TO THE BEST OF MY KNOWLEDGE AND BELIEF, THAT THE PLAT CORRECTLY REPRESENTS SAID SURVEY, THAT ALL MONUMENTS FOUND AND ESTABLISHED ARE OF PERMANENT QUALITY AND OCCUPY THE POSITIONS SHOWN THEREON AND THAT THE MONUMENTS ARE SUFFICIENT TO ENABLE THE SURVEY TO BE RETRACED, MADE FOR THE DEPARTMENT OF TRANSPORTATION, STATE OF ILLINOIS.

DATED AT AURORA, ILLINOIS THIS __ DAY OF _____ 20__ A.D.

ILLINOIS PROFESSIONAL LAND SURVEYOR NO. 2992
EXPIRES NOVEMBER 30, 2026
COMPASS SURVEYING, LTD
ILLINOIS PROFESSIONAL DESIGN FIRM LAND SURVEYING
CORPORATION NUMBER 184-002778
LICENSE EXPIRATION DATE: APRIL 30, 2025

THIS PROFESSIONAL SERVICE CONFORMS TO THE CURRENT ILLINOIS MINIMUM STANDARDS FOR A BOUNDARY SURVEY.

F.A.U. RTE.	SECTION	COUNTY	TOTAL SHEETS	SHEET NO.
7008	22-00142-02-PV	COOK	245	122
		CONTRACT NO.		
	ILLINOIS	FED. AID PROJECT		

COMPASS SURVEYING LTD
2631 Ginger Woods Parkway,
Suite 100 Aurora IL 60502
PHONE: (630)820-9100
FAX: (630)820-7030

MODEL: Default
FILE NAME: F:\Compass\2024\24.0130\DGN\24.0130_SHEETS.dgn

USER NAME = rober	DESIGNED -		REVISED -	7/15/2024
	DRAWN -	B.TRAVER	REVISED -	7/22/2024
PLOT SCALE = 20.0000 ' / in.	CHECKED -	D.McCLINTIC	REVISED -	8/8/2024
PLOT DATE = 8/20/2024	DATE -		REVISED -	8/20/2024

ILLINOIS DEPARTMENT OF TRANSPORTATION
PLAT OF HIGHWAYS

ROUTE FAU 7008	SECTION 22-00142-02-PV	CCUNTY COOK	JOB# R-55-001-097
SEC 7	T 41N, R 11E OF 3RD P.M.	PROJECT# McConnor Parkway	
SCALE: 40'	SHEET NO. 7 OF 7 SHEETS	STA 54+00 TO STA 56+00	CONTRACT NO.

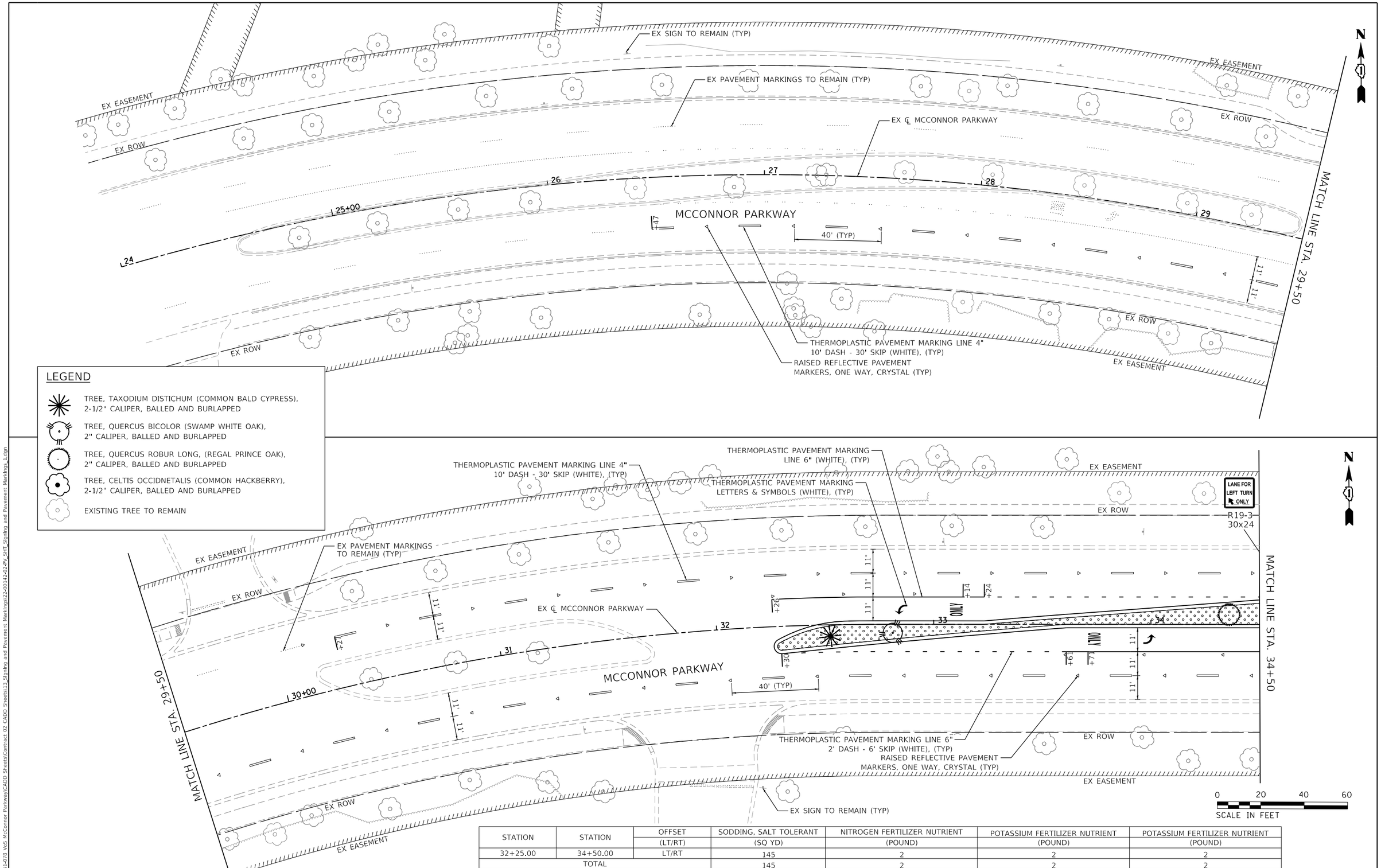

STATION	STATION	OFFSET (LT/RT)	SODDING, SALT TOLERANT (SQ YD)	NITROGEN FERTILIZER NUTRIENT (POUND)	POTASSIUM FERTILIZER NUTRIENT (POUND)	POTASSIUM FERTILIZER NUTRIENT (POUND)
32+25.00	34+50.00	LT/RT	145	2	2	2
TOTAL			145	2	2	2

MODEL: Default
FILE NAME: P2061-078 VoS McConnor Parkway(CADD Sheets(Contract 02 CADD Sheets(13_Signing and Pavement Markings(22-00142-02-PV_SHT_Signing and Pavement Markings_1.dgn

BLA, Inc.

USER NAME = jrodriguez	DESIGNED - JR	REVISED -
	DRAWN - JR	REVISED -
PLOT SCALE = 40.0117 ' / in.	CHECKED - GJE	REVISED -
PLOT DATE = 6/4/2025	DATE - 02/18/2025	REVISED -

STATE OF ILLINOIS
DEPARTMENT OF TRANSPORTATION

MCCONNOR PARKWAY RECONSTRUCTION
PAVEMENT MARKINGS, LANSCAPING, AND SIGNING PLANS

SCALE: 1" = 20' | SHEET 1 OF $PMTSHEETS | STA. 24+00 TO STA. 45+00

F.A.U. RTE.	SECTION	COUNTY	TOTAL SHEETS	SHEET NO.
7008	22-00142-02-PV	COOK	245	123
		CONTRACT NO. 61L38		
		ILLINOIS FED. AID PROJECT		

STATION	STATION	OFFSET	SODDING, SALT TOLERANT	NITROGEN FERTILIZER NUTRIENT	PHOSPHORUS FERTILIZER NUTRIENT	POTASSIUM FERTILIZER NUTRIENT
		(LT/RT)	(SQ YD)	(POUND)	(POUND)	(POUND)
36+50.00	40+00.00	LT	462	6	6	6
36+50.00	40+00.00	LT/RT	202	2	2	2
36+50.00	40+00.00	RT	286	4	4	4
TOTAL			951	12	12	12

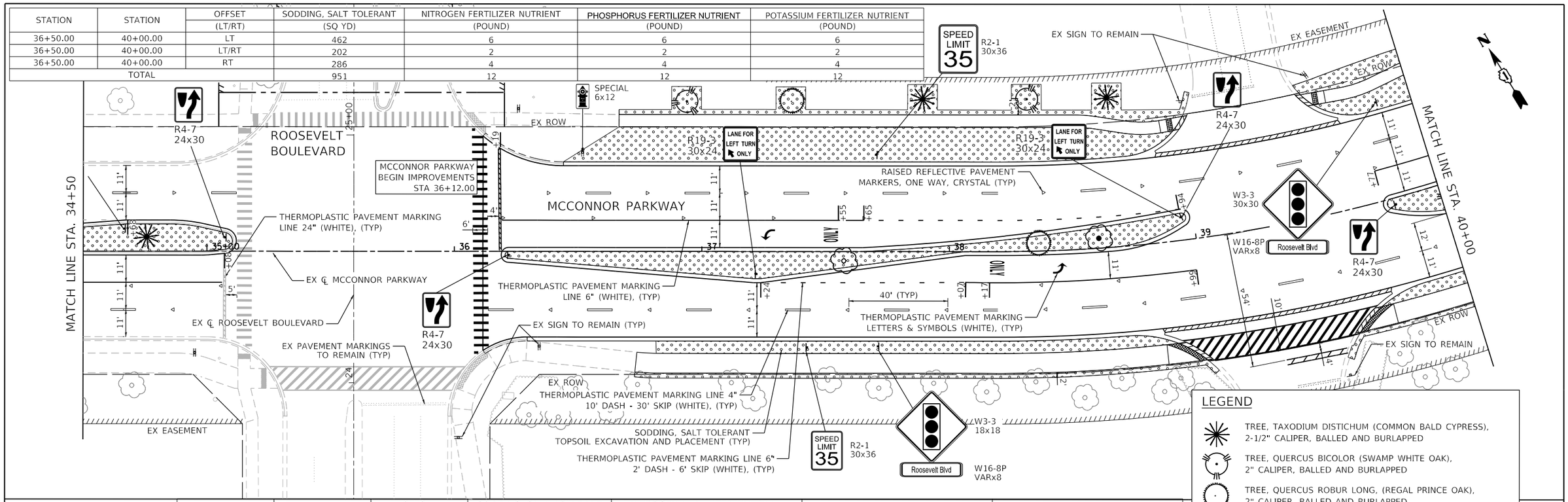

LEGEND

- TREE, TAXODIUM DISTICHUM (COMMON BALD CYPRESS), 2-1/2" CALIPER, BALLED AND BURLAPPED
- TREE, QUERCUS BICOLOR (SWAMP WHITE OAK), 2" CALIPER, BALLED AND BURLAPPED
- TREE, QUERCUS ROBUR LONG, (REGAL PRINCE OAK), 2" CALIPER, BALLED AND BURLAPPED
- TREE, CELTIS OCCIDNETALIS (COMMON HACKBERRY), 2-1/2" CALIPER, BALLED AND BURLAPPED
- EXISTING TREE TO REMAIN

STATION	STATION	OFFSET	SODDING, SALT TOLERANT	NITROGEN FERTILIZER NUTRIENT	PHOSPHORUS FERTILIZER NUTRIENT	POTASSIUM FERTILIZER NUTRIENT
		(LT/RT)	(SQ YD)	(POUND)	(POUND)	(POUND)
40+00.00	45+00.00	LT	823	10	10	10
40+00.00	45+00.00	LT/RT	786	10	10	10
40+00.00	45+00.00	RT	451	6	6	6
TOTAL			2,060	26	26	26

NOTE: ALL MEDIANS SHALL USE 24" TOPSOIL, ALL OTHER AREAS SHALL USE 4" TOPSOIL

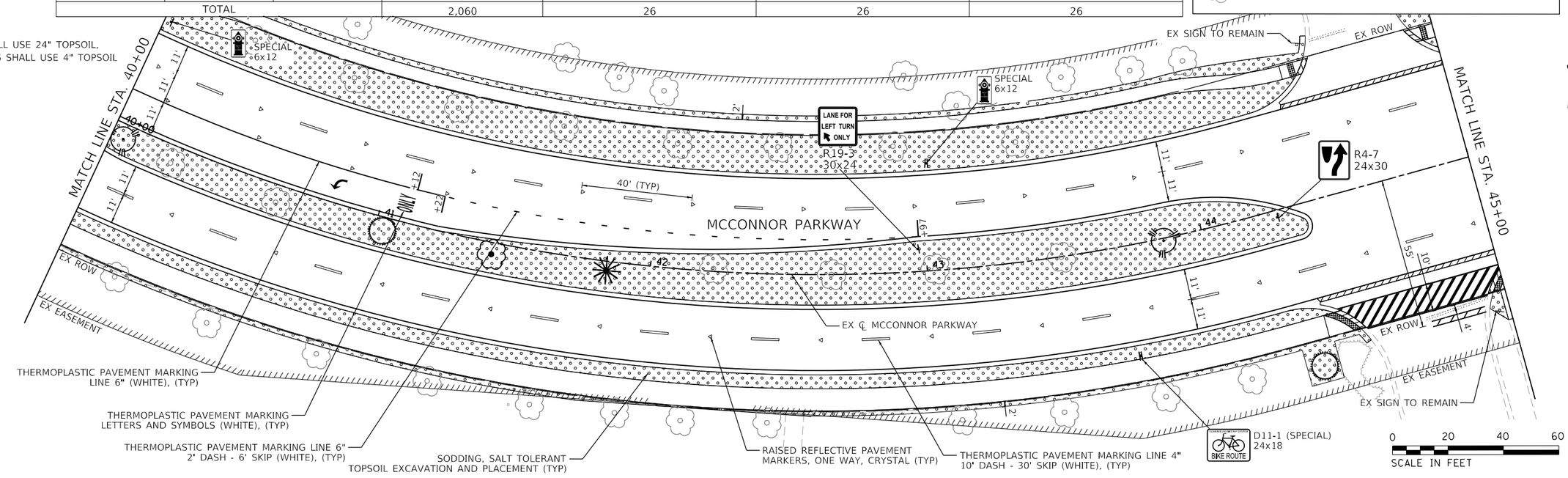

MODEL: Default
FILE NAME: P0061-078 VOS McConnor Parkway/CADD Sheets/Contract 02 CADD Sheets/13_Signing and Pavement Markings/22-00142-02-PV_SHT_Signing and Pavement Markings_2.dgn

BLA, Inc.	USER NAME = jrodriguez	DESIGNED - JR	REVISED -
		DRAWN - JR	REVISED -
	PLOT SCALE = 40.0386 ' / in.	CHECKED - GJE	REVISED -
	PLOT DATE = 6/4/2025	DATE - 02/18/2025	REVISED -

STATE OF ILLINOIS
DEPARTMENT OF TRANSPORTATION

MCCONNOR PARKWAY RECONSTRUCTION
PAVEMENT MARKINGS, LANSCAPING, AND SIGNING PLANS

SCALE: 1" = 20' | SHEET 2 OF $PMTSHEETS | STA. 34+50 TO STA. 45+00

F.A.U. RTE.	SECTION	COUNTY	TOTAL SHEETS	SHEET NO.
7008	22-00142-02-PV	COOK	245	124

CONTRACT NO. 61L38

ILLINOIS FED. AID PROJECT

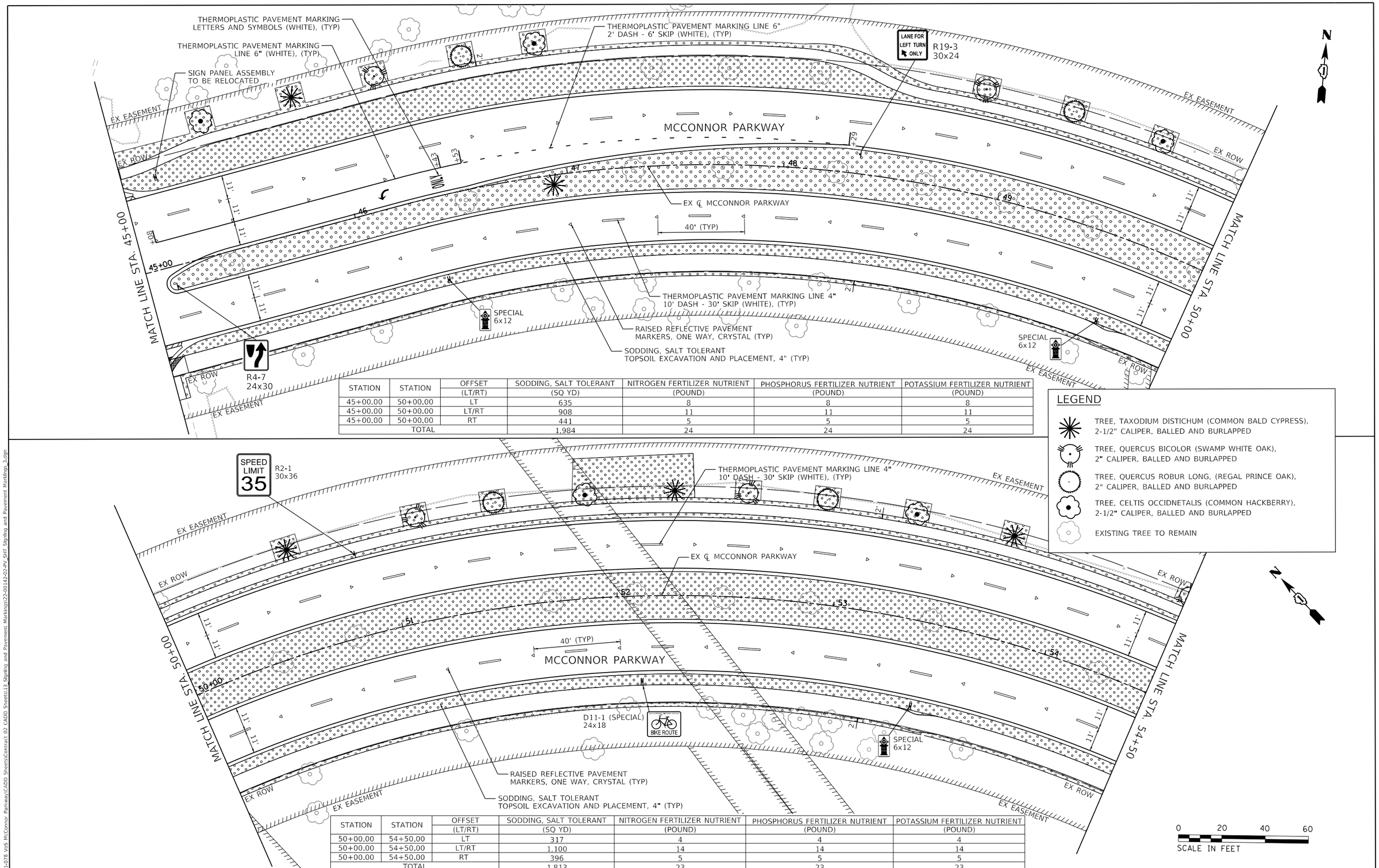

STATION	STATION	OFFSET (LT/RT)	SODDING, SALT TOLERANT (SQ YD)	NITROGEN FERTILIZER NUTRIENT (POUND)	PHOSPHORUS FERTILIZER NUTRIENT (POUND)	POTASSIUM FERTILIZER NUTRIENT (POUND)
45+00.00	50+00.00	LT	635	8	8	8
45+00.00	50+00.00	LT/RT	908	11	11	11
45+00.00	50+00.00	RT	441	5	5	5
TOTAL			1,984	24	24	24

STATION	STATION	OFFSET (LT/RT)	SODDING, SALT TOLERANT (SQ YD)	NITROGEN FERTILIZER NUTRIENT (POUND)	PHOSPHORUS FERTILIZER NUTRIENT (POUND)	POTASSIUM FERTILIZER NUTRIENT (POUND)
50+00.00	54+50.00	LT	317	4	4	4
50+00.00	54+50.00	LT/RT	1,100	14	14	14
50+00.00	54+50.00	RT	396	5	5	5
TOTAL			1,813	23	23	23

BLA, Inc.

USER NAME = jrodriguez	DESIGNED - JR	REVISED -
	DRAWN - JR	REVISED -
PLOT SCALE = 40.1397 ' / in.	CHECKED - GJE	REVISED -
PLOT DATE = 6/4/2025	DATE - 02/18/2025	REVISED -

STATE OF ILLINOIS
DEPARTMENT OF TRANSPORTATION

MCCONNOR PARKWAY RECONSTRUCTION
PAVEMENT MARKINGS, LANSCAPING, AND SIGNING PLANS

SCALE: 1" = 20' | SHEET 3 OF $PMTSHEETS | STA. 45+00 TO STA. 54+50

F.A.U. RTE.	SECTION	COUNTY	TOTAL SHEETS	SHEET NO.
7008	22-00142-02-PV	COOK	245	125

CONTRACT NO. 61L38

ILLINOIS FED. AID PROJECT

MODEL: Default
FILE NAME: F:\861-078 VOS McConnor Parkway\CADD Sheets\Contract 02 CADD Sheets\13 Signing and Pavement Markings\22-00142-02-PV_SHT Signing and Pavement Markings_3.dgn

STATION	STATION	OFFSET (LT/RT)	SODDING, SALT TOLERANT (SQ YD)	NITROGEN FERTILIZER NUTRIENT (POUND)	PHOSPHORUS FERTILIZER NUTRIENT (POUND)	POTASSIUM FERTILIZER NUTRIENT (POUND)
54+50.00	58+50.00	LT	277	3	3	3
54+50.00	58+50.00	LT/RT	558	7	7	7
54+50.00	58+50.00	RT	311	4	4	4
TOTAL			1,146	14	14	14

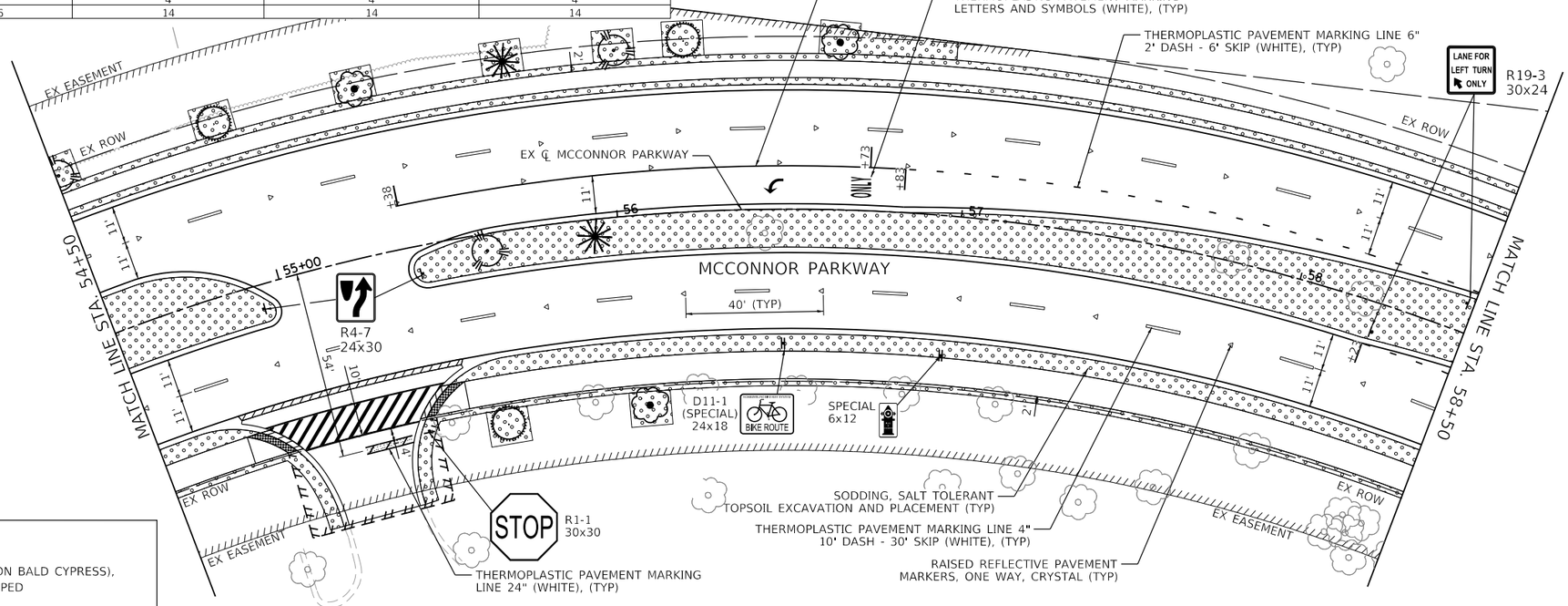

LEGEND

- TREE, TAXODIUM DISTICHUM (COMMON BALD CYPRESS), 2-1/2" CALIPER, BALLED AND BURLAPPED
- TREE, QUERCUS BICOLOR (SWAMP WHITE OAK), 2" CALIPER, BALLED AND BURLAPPED
- TREE, QUERCUS ROBUR LONG, (REGAL PRINCE OAK), 2" CALIPER, BALLED AND BURLAPPED
- TREE, CELTIS OCCIDNETALIS (COMMON HACKBERRY), 2-1/2" CALIPER, BALLED AND BURLAPPED
- EXISTING TREE TO REMAIN

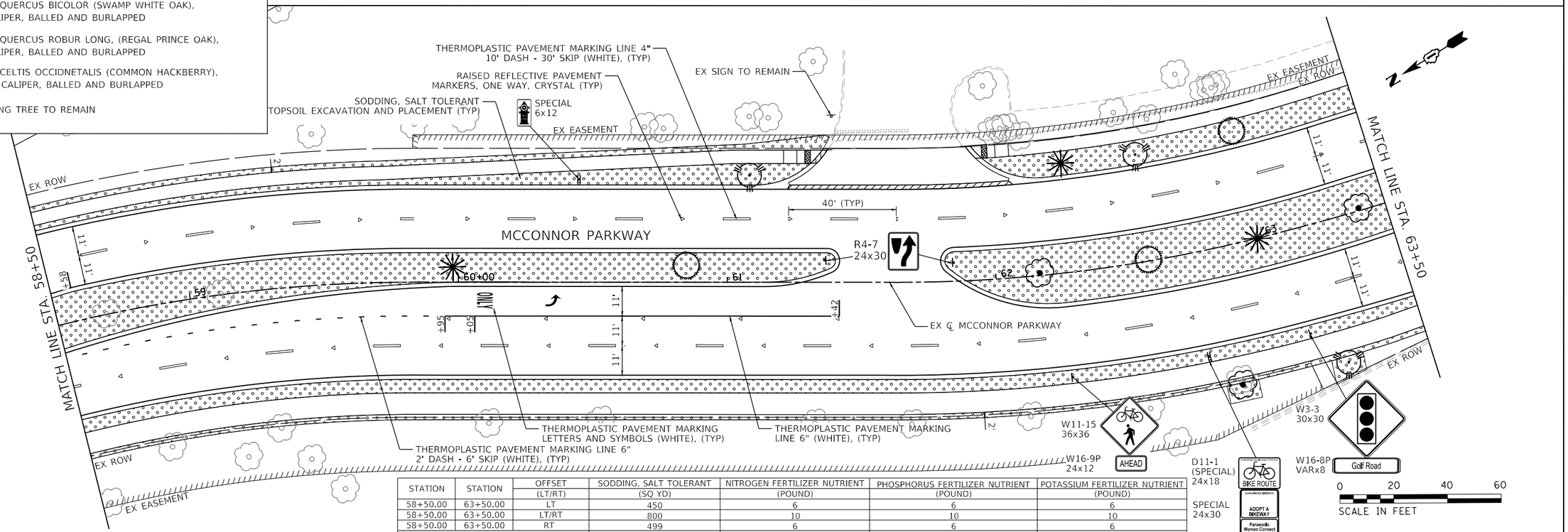

STATION	STATION	OFFSET (LT/RT)	SODDING, SALT TOLERANT (SQ YD)	NITROGEN FERTILIZER NUTRIENT (POUND)	PHOSPHORUS FERTILIZER NUTRIENT (POUND)	POTASSIUM FERTILIZER NUTRIENT (POUND)
58+50.00	63+50.00	LT	450	6	6	6
58+50.00	63+50.00	LT/RT	800	10	10	10
58+50.00	63+50.00	RT	499	6	6	6
TOTAL			1,749	22	22	22

BLA, Inc.

USER NAME = jrodriguez	DESIGNED - JR	REVISED -
	DRAWN - JR	REVISED -
PLOT SCALE = 40.0200 ' / in.	CHECKED - GJE	REVISED -
PLOT DATE = 6/4/2025	DATE - 02/18/2025	REVISED -

STATE OF ILLINOIS
DEPARTMENT OF TRANSPORTATION

MCCONNOR PARKWAY RECONSTRUCTION
PAVEMENT MARKINGS, LANSCAPING, AND SIGNING PLANS

SCALE: 1" = 20' | SHEET 4 OF $PMTSHEETS | STA. 54+50 TO STA. 63+50

F.A.U. RTE.	SECTION	COUNTY	TOTAL SHEETS	SHEET NO.
7008	22-00142-02-PV	COOK	245	126
		CONTRACT NO. 61L38		
		ILLINOIS FED. AID PROJECT		

MODEL: Default
FILE NAME: F:\BLA\1478 Vos McConnor Parkway\CADD Sheets\Contract 02 CADD Sheets\13_Signing and Pavement Markings\22-00142-02-PV_SHT_Signing and Pavement Markings_4.dgn

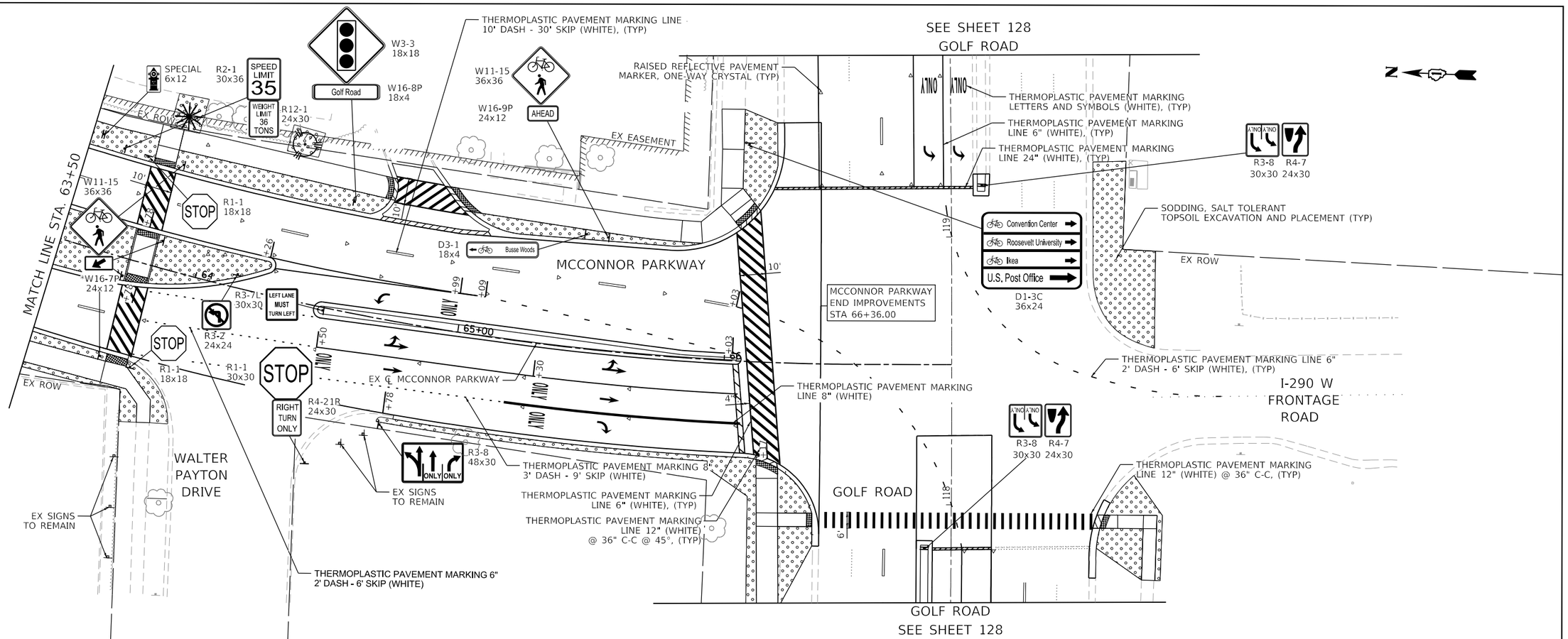

*NOTE: DOWNWARD DIAGONAL PLAQUES (W16-7P) WITHIN MEDIAN SHALL POINT TO THE RIGHT (PAVEMENT)

LEGEND

- TREE, TAXODIUM DISTICHUM (COMMON BALD CYPRESS), 2-1/2" CALIPER, BALLED AND BURLAPPED
- TREE, QUERCUS BICOLOR (SWAMP WHITE OAK), 2" CALIPER, BALLED AND BURLAPPED
- TREE, QUERCUS ROBUR LONG, (REGAL PRINCE OAK), 2" CALIPER, BALLED AND BURLAPPED
- TREE, CELTIS OCCIDNETALIS (COMMON HACKBERRY), 2-1/2" CALIPER, BALLED AND BURLAPPED
- EXISTING TREE TO REMAIN

0 20 40 60
SCALE IN FEET

MODEL: Default
FILE NAME: F:\86\078 VoS McConnor Parkway\CADD Sheets\Contract 02 CADD Sheets\13_Signing and Pavement Markings\22-00142-02-PV SHT_Signing and Pavement Markings_5.dgn

BLA, Inc.	USER NAME = jrodriguez	DESIGNED - JR	REVISED -
		DRAWN - JR	REVISED -
	PLOT SCALE = 40.1470 ' / in.	CHECKED - GJE	REVISED -
	PLOT DATE = 6/4/2025	DATE - 02/18/2025	REVISED -

STATE OF ILLINOIS
DEPARTMENT OF TRANSPORTATION

MCCONNOR PARKWAY RECONSTRUCTION
PAVEMENT MARKINGS, LANSCAPING, AND SIGNING PLANS

SCALE: 1" = 20' | SHEET 5 OF $PMTSHEETS | STA. 63+50 TO STA. 66+36

F.A.U. RTE.	SECTION	COUNTY	TOTAL SHEETS	SHEET NO.
7008	22-00142-02-PV	COOK	245	127

CONTRACT NO. 61L38

ILLINOIS FED. AID PROJECT

NOTES:
1. ALL PAVEMENT MARKINGS INSTALLED ACCORDING TO IDOT D1 PM DETAIL TC-13
2. ALL RAISED REFLECTIVE PAVEMENT MARKERS INSTALLED ACCORDING TO IDOT D1 RRPM DETAIL TC-11

EAST DRIVE

MALL DRIVE

GOLF ROAD BEGIN IMPROVEMENTS STA 112+83.00

EX ℄ GOLF ROAD

EX PAVEMENT MARKING TO REMAIN (TYP)

GOLF ROAD

ONE WAY R3-5R 24x30

110+00 | 111 | 112 | 113 | 114 | 115+00

MATCH LINE STA. 115+50

10' (TYP)

80' (TYP)

RAISED REFLECTIVE PAVEMENT MARKERS, ONE WAY, CRYSTAL (TYP)

THERMOPLASTIC PAVEMENT MARKING LINE 6" 2' DASH - 6' SKIP (WHITE), (TYP)

THERMOPLASTIC PAVEMENT MARKING LINE 4" 10' DASH - 30' SKIP (WHITE), (TYP)

LEGEND

- TREE, TAXODIUM DISTICHUM (COMMON BALD CYPRESS), 2-1/2" CALIPER, BALLED AND BURLAPPED
- TREE, QUERCUS BICOLOR (SWAMP WHITE OAK), 2" CALIPER, BALLED AND BURLAPPED
- TREE, QUERCUS ROBUR LONG, (REGAL PRINCE OAK), 2" CALIPER, BALLED AND BURLAPPED
- TREE, CELTIS OCCIDNETALIS (COMMON HACKBERRY), 2-1/2" CALIPER, BALLED AND BURLAPPED
- EXISTING TREE TO REMAIN

MCCONNOR PARKWAY (SEE SHEET 127)

MCCONNOR PARKWAY

W3-3 18x18

W16-8P 18x4

McConnor Parkway

R3-5R 24x30 ONLY

MCCONNOR PARKWAY END IMPROVEMENTS STA 66+36.00

Convention Center
Roosevelt University
Ikea
U.S. Post Office

D1-3C 36x24

EX ℄ MCCONNOR PARKWAY

THERMOPLASTIC PAVEMENT MARKING LINE 12" (WHITE) @ 36" C-C @ 45°, (TYP)

THERMOPLASTIC PAVEMENT MARKING LINE 6" (WHITE), (TYP)

THERMOPLASTIC PAVEMENT MARKING LINE 6" (WHITE), (TYP)

R3-8 30x30 R4-7 24x30

THERMOPLASTIC PAVEMENT MARKING LINE 24" (WHITE), (TYP)

RAISED REFLECTIVE PAVEMENT MARKERS, ONE WAY, CRYSTAL (TYP)

MATCH LINE STA. 115+50

117 | 118 | 119 | 120+00

GOLF ROAD

EX ℄ GOLF ROAD

THERMOPLASTIC PAVEMENT MARKING LETTERS AND SYMBOLS (WHITE), (TYP)

10' (TYP)

THERMOPLASTIC PAVEMENT MARKING LINE 4" 10' DASH - 30' SKIP (WHITE), (TYP)

80' (TYP)

THERMOPLASTIC PAVEMENT MARKING LINE 12" (WHITE) @ 36" C-C, (TYP)

R3-8 30x30 R4-7 24x30

THERMOPLASTIC PAVEMENT MARKING LINE 6" 2' DASH - 6' SKIP (WHITE), (TYP)

EX PAVEMENT MARKING TO REMAIN (TYP)

EXISTING R3-2 SIGN PANEL TO BE REMOVED

SODDING, SALT TOLERANT TOPSOIL EXCAVATION AND PLACEMENT (TYP)

THERMOPLASTIC PAVEMENT MARKING LINE 6" 2' DASH - 6' SKIP (WHITE), (TYP)

I-290 W. FRONTAGE ROAD

MATCH LINE STA. 121+50

0 20 40 60
SCALE IN FEET

MODEL: Default
FILE NAME: F0801-078 VDS McConnor Parkway\CADD Sheets\Contract 02 CADD Sheets\13_Signing and Pavement Markings\22-00142-02-PV_SHT_Signing and Pavement Markings_6.dgn

BLA, Inc.

USER NAME = jrodriguez	DESIGNED - JR	REVISED -	
	DRAWN - JR	REVISED -	
PLOT SCALE = 40.0000 ' / in.	CHECKED - GJE	REVISED -	
PLOT DATE = 6/4/2025	DATE - 02/18/2025	REVISED -	

STATE OF ILLINOIS
DEPARTMENT OF TRANSPORTATION

MCCONNOR PARKWAY RECONSTRUCTION
PAVEMENT MARKINGS, LANSCAPING, AND SIGNING PLANS - GOLF ROAD

SCALE: 1" = 20' | SHEET 6 OF $PMTSHEETS | STA. 109+50 TO STA. 121+50

F.A.U. RTE.	SECTION	COUNTY	TOTAL SHEETS	SHEET NO.
7008	22-00142-02-PV	COOK	245	128
		CONTRACT NO. 61L38		
		ILLINOIS FED. AID PROJECT		

NOTES:
1. ALL PAVEMENT MARKINGS INSTALLED ACCORDING TO IDOT D1 PM DETAIL TC-13
2. ALL RAISED REFLECTIVE PAVEMENT MARKERS INSTALLED ACCORDING TO IDOT D1 RRPM DETAIL TC-11

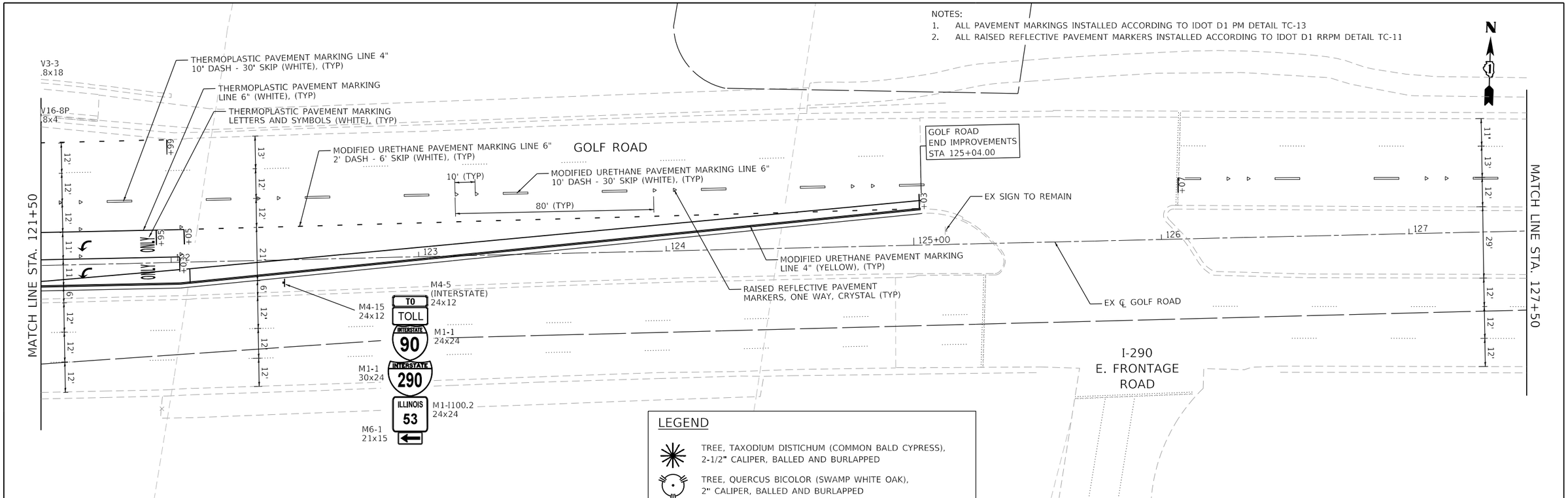

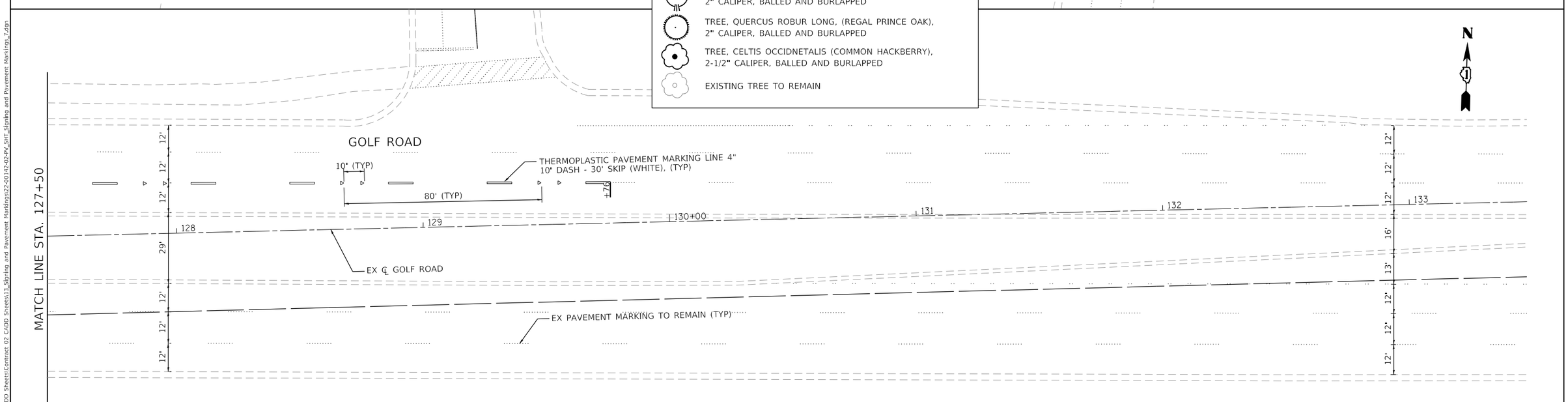

LEGEND

- TREE, TAXODIUM DISTICHUM (COMMON BALD CYPRESS), 2-1/2" CALIPER, BALLED AND BURLAPPED
- TREE, QUERCUS BICOLOR (SWAMP WHITE OAK), 2" CALIPER, BALLED AND BURLAPPED
- TREE, QUERCUS ROBUR LONG, (REGAL PRINCE OAK), 2" CALIPER, BALLED AND BURLAPPED
- TREE, CELTIS OCCIDNETALIS (COMMON HACKBERRY), 2-1/2" CALIPER, BALLED AND BURLAPPED
- EXISTING TREE TO REMAIN

0 20 40 60
SCALE IN FEET

MODEL: Default
FILE NAME: F:\BS\1-078 WS McConnor Parkway\CADD Sheets\Contract 02 CADD Sheets\13_Signing and Pavement Markings\22-00142-02-PV_SHT_Signing and Pavement Markings_7.dgn

BLA, Inc.	USER NAME = jrodriguez	DESIGNED - JR	REVISED -
		DRAWN - JR	REVISED -
	PLOT SCALE = 40.0000 ' / in.	CHECKED - GJE	REVISED -
	PLOT DATE = 6/4/2025	DATE - 02/18/2025	REVISED -

STATE OF ILLINOIS
DEPARTMENT OF TRANSPORTATION

MCCONNOR PARKWAY RECONSTRUCTION
PAVEMENT MARKINGS, LANSCAPING, AND SIGNING PLANS

SCALE: 1" = 20' | SHEET 7 OF $PMTSHEETS | STA. 121+50 TO STA. 130+00

F.A.U. RTE.	SECTION	COUNTY	TOTAL SHEETS	SHEET NO.
7008	22-00142-02-PV	COOK	245	129
		CONTRACT NO. 61L38		
		ILLINOIS FED. AID PROJECT		

MCCONNOR PARKWAY - SIGNING SCHEDULE							
STATION	OFFSET	SIGN NO.	SIZE (LXH)		AREA (SF)	SIGN TYPE	POST LENGTH (FT)
34+66.62	9.19 LT	R19-3	30	24	5	1	14
35+07..4	5.60 LT	R4-7	24	30	5	1	14
36+21.98	1.47 RT	R4-7	24	30	5	1	14
36+51.73	40.09 LT	SPECIAL	6	12	1	1	13
		SPECIAL	6	12			
37+22.01	9.19 RT	R19-3	30	24	5	1	14
37+42.57	38.73 RT	R2-1	30	36	7.5	1	14
37+70.31	39.09 LT	R2-1	30	36	7.5	1	14
37+71.11	38.33 RT	W3-3	18	18	2.25	1	16
		W16-8P	VAR	8	VAR		
38+94.67	9.33 LT	R19-3	30	24	5	1	14
		R4-7	24	30	5		
39+81.56	2.27 RT	R4-7	24	30	5	1	14
39+84.81	39.22 LT	W3-3	30	30	6.25	1	16
		W16-8P	VAR	8	VAR		
40+02.99	40.22 LT	SPECIAL	6	12	0.5	1	13
42+96.95	8.13 LT	R19-3	30	24	5	1	14
43+02.29	38.73 LT	SPECIAL	6	12	0.5	1	13
		SPECIAL	6	12	0.5		
43+70.33	40.09 RT	D11-1	24	18	6	1	14
		D11-1	24	18			
44+27.65	2.57 RT	R4-7	24	30	5	1	14
45+13.11	9.39 RT	R4-7	24	30	5	1	14
46+35.33	38.65 RT	SPECIAL	6	12	0.5	1	13
		SPECIAL	6	12	0.5		
48+34.22	9.00 LT	R19-3	30	24	5	1	14
49+62.20	40.26 RT	SPECIAL	6	12	0.5	1	13
50+86.57	37.75 LT	R2-1	30	36	7.5	1	14
52+10.35	39.53 RT	D11-1	24	18	6	1	14
		D11-1	24	18			
53+44.34	39.62 RT	SPECIAL	6	12	0.5	1	13
		SPECIAL	6	12	0.5		
54+93.32	7.01 RT	R4-7	24	30	5	1	14
55+33.43	53.18 RT	R1-1	30	30	6.25	1	15
55+41.31	8.12 RT	R4-7	24	30	5	1	14
56+47.97	38.86 RT	D11-1	24	18	6	1	14
		D11-1	24	18			
56+97.40	40.57 RT	SPECIAL	6	12	0.5	1	13
		SPECIAL	6	12	0.5		
58+24.41	8.70 RT	R19-3	30	24	5	1	14
58+47.76	8.45 LT	R19-3	30	24	5	1	14
60+44.86	38.33 LT	SPECIAL	6	12	0.5	1	13
		SPECIAL	6	12	0.5		
61+36.22	8.20 LT	R4-7	24	30	5	1	13
61+84.47	7.01 LT	R4-7	24	30	5	1	13
62+24.44	38.92 RT	W11-15	30	30	6.25	1	14
		W16-9P	24	12	2	1	14
62+72.38	38.97 RT	D11-1	24	18	16	1	14
		D11-1	24	18			
		SPECIAL	24	30			
		SPECIAL	24	30			
63+08.81	39.24 RT	W3-3	30	30	6.25	1	14
		W16-8P	VAR	8	1		
63+51.45	42.02 LT	SPECIAL	6	12	0.5	1	13
63+60.72	39.14 LT	R2-1	36	36	9	1	14
		R12-1	24	30	5		
63+70.49	38.74 LT	R1-1	18	18	2.25	1	13
63+73.53	6.73 RT	W11-15	36	36	9	1	16
		W16-7P	24	12	2		
63+73.73	37.65RT	W11-15	36	36	9	1	16
		W16-7P	24	12	2		
63+84.55	39.40 LT	W11-15	36	36	9	1	16
		W16-7P	24	12	2		
63+84.62	9.96 LT	W11-15	36	36	9	1	16
		W16-7P	24	12	2		
63+85.45	38.66 RT	R1-1	18	18	2.25	1	13
64+15.08	5.05 LT	R3-2	24	24	4	1	14
64+48.97	1.09 RT	R3-5L	18	24	6	1	14
64+52.55	41.08 LT	W3-3	30	30	6.25	1	16
		W16-8P	VAR	8	VAR		
64+53.75	58.10 RT	R1-1	30	30	6.25	1	15
		R4-21R	24	30	5		
64+76.86	38.92 RT	R3-8	48	30	10	1	16
65+43.67	42.36 LT	D3-1	18	4	0.495	1	14
65+52.23	42.31 LT	WC-7	30	30	6.250	1	16
		W16-9P	24	12	2.000		
66+05.45	81.08 LT	D1-3C	36	24	6	1	15

GOLF ROAD - SIGNING SCHEDULE							
114+83.67	2.32 LT	R3-5R	12	18	1.5	1	14
116+33.61	61.01 LT	W3-3	18	18	2.75	1	16
		W16-8P	18	4			
117+83.48	10.23 LT	R3-8	30	30	11.25	1	16
		R4-7	24	30			
119+18.70	11.45 RT	R3-8	30	30	11.25	1	16
		R4-7	24	30			
120+63.83	66.91 LT	W3-3	30	30	6.25	1	16
		W16-8P	VAR	8	VAR		
120+70.93	65.83 LT	R3-5R	24	30	5	1	16
122+45.15	9.20 RT	M4-5	24	12	2	1	16
		M4-15	24	12	2	1	16
		M1-1	24	24	4	1	16
		M1-1	30	24	5	1	16
		M1-I100.2	24	24	4	1	16
		M6-1	21	15	2.18	1	16

MODEL: Default
FILE NAME: F:\861-078 VoS McConnor Parkway\CADD Sheets\Contract 02 CADD Sheets\13_Signing and Pavement Markings\22-00142-02-PV_SHT_Signing and Pavement Markings_8.dgn

BLA, Inc.

USER NAME = jrodriguez	DESIGNED - JR	REVISED -
	DRAWN - JR	REVISED -
PLOT SCALE = 40.0000 ' / in.	CHECKED - GJE	REVISED -
PLOT DATE = 6/4/2025	DATE - 02/18/2025	REVISED -

STATE OF ILLINOIS
DEPARTMENT OF TRANSPORTATION

MCCONNOR PARKWAY RECONSTRUCTION
PAVEMENT MARKINGS, LANSCAPING, AND SIGNING PLANS

SCALE: 1" = 20' | SHEET 8 OF $PMTSHEETS | STA. 121+50 TO STA. 130+00

F.A.U. RTE.	SECTION	COUNTY	TOTAL SHEETS	SHEET NO.
7008	22-00142-02-PV	COOK	245	130

CONTRACT NO. 61L38

ILLINOIS FED. AID PROJECT

SIGN PANEL – TYPE 1 OR TYPE 2

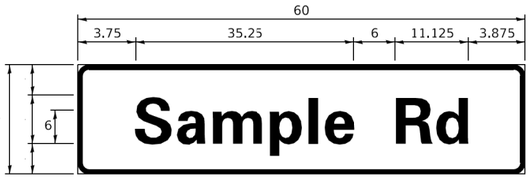

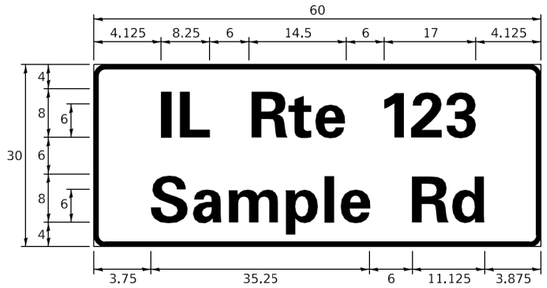

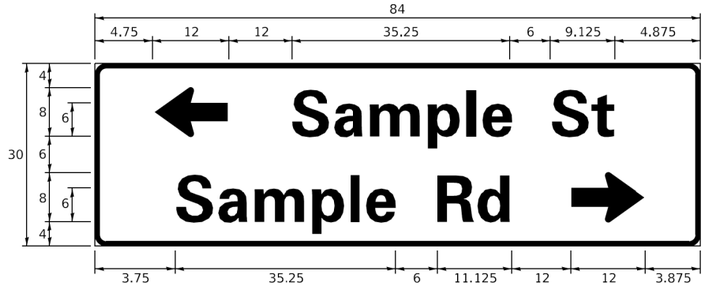

DESIGN SERIES	AREA (SQ FT)	SIGN PANEL TYPE	SHEETING TYPE	QTY. REQUIRED
D OR C	-	1 OR 2	ZZ	-

COMMON STREET NAME ABBREVIATIONS AND WIDTHS

NAME	ABBREVATION	WIDTH (INCH)	
		SERIES "C"	SERIES "D"
AVENUE	Ave	15.000	18.250
BOULEVARD	Blvd	17.125	20.000
CIRCLE	Cir	11.125	13.000
COURT	Ct	8.250	9.625
DRIVE	Dr	8.625	10.125
HIGHWAY	Hwy	18.375	22.000
ILLINOIS	IL	7.000	8.250
LANE	Ln	9.125	10.750
PARKWAY	Pkwy	23.375	27.375
PLACE	Pl	7.125	7.750
ROAD	Rd	9.625	11.125
ROUTE	Rte	12.625	14.500
STREET	St	8.000	9.125
TERRACE	Ter	12.625	14.625
TRAIL	Tr	7.750	9.125
UNITED STATES	US	10.375	12.250

GENERAL NOTES

1. WHERE MAST ARM MOUNTED STREET NAME SIGNS ARE SPECIFIED, THE MAST ARM ASSEMBLY AND POLES SHALL BE DESIGNED TO SUPPORT THE LOADINGS CALLED FOR ON STANDARDS 877001, 877002, 877006, 877011 AND 877012, AS APPLICABLE, PLUS TWO (2) SIGN PANELS 2'-6" x 8'-0" MOUNTED AS SHOWN. THE DESIGN SHALL BE IN ACCORDANCE WITH THE REQUIREMENTS OF THE CURRENT "STANDARD SPECIFICATIONS FOR STRUCTURAL SUPPORTS FOR HIGHWAY SIGNS, LUMINAIRES, AND TRAFFIC SIGNALS" AS PUBLISHED BY THE AMERICAN ASSOCIATION OF STATE HIGHWAY AND TRANSPORTATION OFFICIALS FOR 80 M.P.H. WIND VELOCITY.
2. ALL SIGNS SHALL CONSIST OF A WHITE LEGEND AND BORDER (TYPE ZZ SHEETING) ON A GREEN BACKGROUND (TYPE ZZ SHEETING)
3. THE SIGN LENGTH SHALL BE IN 6-INCH INCREMENTS, BUT THE OVERALL LENGTH SHALL NOT EXCEED 8'-0". ALL BORDERS IF POSSIBLE. BUT MAY BE REDUCED TO 5" WHEN SPACING IS CRITICAL. A MINIMUM OF 2-1/2" SHALL BE INCLUDED BETWEEN THE WORD AND THE RIGHT AND LEFT EDGES OF THE SIGN.
4. A PREFERRED METHOD FOR THE SIGN DESIGN IS TO USE SERIES "D" LETTER ON A ONE-LINE SIGN 18" IN HEIGHT AND A MAXIMUM OF 8'-0" IN WIDTH. IF SERIES "D" DOES NOT FIT ON A 8"-0" SIGN, THEN SERIES "C" SHOULD BE TRIED. IF SERIES "C" DOES NOT FIT ON A 8'-0" SIGN, A 30" HIGH TWO-LINE SIGN CAN BE USED. THE CROSSROAD DESIGNATION AS TO STREET, AVENUE, ETC. SHOULD BE SPELLED OUT ON THE SECOND LINE, IF THE ABBREVIATION CANNOT FIT ON THE FIRST LINE.
5. LED ILLUMINATED STREET NAME SIGNS CAN BE USED IN PLACE OF REGULAR SIGN PANELS BUT ANY SPECIAL WORDING AND SYMBOLOGY MUST BE APPROVED BY THE DEPARTMENT. GENERAL DESIGN REQUIREMENT AS LISTED ABOVE (COLOR, FONT, SIZE, ETC.) MUST BE FOLLOWED.
6. SIGNFIX ALUMINUM CHANNEL FRAMING SYSTEM SHALL BE USED FOR ALL SIGNS ATTACHED TO SIGNAL POLES AND POSTS.

LOCAL SUPPLIERS:	PARTS LISTING:	
- J.O. HERBERT COMPANY, INC MIDLOTHIAN, VA	SIGN CHANNEL	PART #HPN053 (MED. CHANNEL)
	SIGN SCREWS	1/4" x 14 x 1" H.W.H. #3 SELF TAPPING WITH NEOPRENE WASHER
- WESTERN REMAC, INC. WOODRIDGE, IL	BRACKETS	PART #HPN034 (UNIVERSAL) CHANNEL CLAMPS WITH STAINLESS STEEL STRAPPING

OTHER BRANDS OF MOUNTING HARDWARE ARE ACCEPTABLE, BASED UPON THE DEPARTMENT'S APPROVAL AND COMPATIBILITY WITH THE CHANNEL/BRACKET OF THE ABOVE PRODUCT.

MOUNTING LOCATION

ARM OR POLE MOUNTED

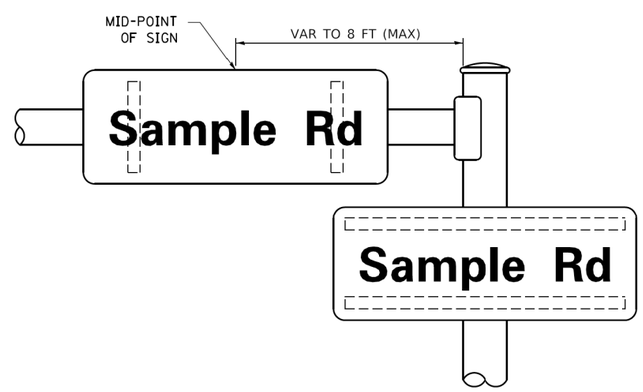

SUPPORTING CHANNELS

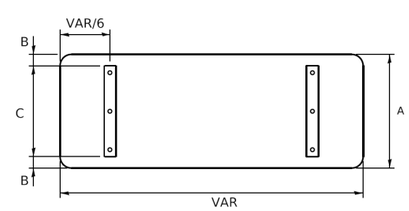

A	B	C
18"	2"	14"
30"	2"	24"

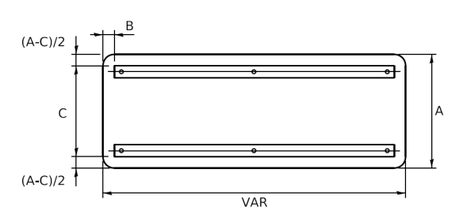

A	B	C
18"	2"	12"
30"	2"	22"

STANDARD ALPHABETS SPACING CHART

(8") UPPER CASE AND (6") LOWER CASE

FHWA SERIES "C"				FHWA SERIES "D"			
CHARACTER	LEFT SPACING (INCH)	WIDTH (INCH)	RIGHT SPACING (INCH)	CHARACTER	LEFT SPACING (INCH)	WIDTH (INCH)	RIGHT SPACING (INCH)
A	0.240	5.122	0.240	A	0.240	6.804	0.240
B	0.880	4.482	0.480	B	0.960	5.446	0.400
C	0.720	4.482	0.720	C	0.800	5.446	0.800
D	0.880	4.482	0.720	D	0.960	5.446	0.800
E	0.880	4.082	0.480	E	0.960	4.962	0.400
F	0.880	4.082	0.240	F	0.960	4.962	0.240
G	0.720	4.482	0.720	G	0.800	5.446	0.800
H	0.880	4.482	0.880	H	0.960	5.446	0.960
I	0.880	1.120	0.880	I	0.960	1.280	0.960
J	0.240	4.082	0.880	J	0.240	5.122	0.960
K	0.880	4.482	0.480	K	0.960	5.604	0.400
L	0.880	4.082	0.240	L	0.960	4.962	0.240
M	0.880	5.284	0.880	M	0.960	6.244	0.960
N	0.880	4.482	0.880	N	0.960	5.446	0.960
O	0.720	4.722	0.720	O	0.800	5.684	0.800
P	0.880	4.482	0.720	P	0.960	5.446	0.240
Q	0.720	4.722	0.720	Q	0.800	5.684	0.800
R	0.880	4.482	0.480	R	0.960	5.446	0.400
S	0.480	4.482	0.480	S	0.400	5.446	0.400
T	0.240	4.082	0.240	T	0.240	4.962	0.240
U	0.880	4.482	0.880	U	0.960	5.446	0.960
V	0.240	4.962	0.240	V	0.240	6.084	0.240
W	0.240	6.084	0.240	W	0.240	7.124	0.240
X	0.240	4.722	0.240	X	0.400	5.446	0.400
Y	0.240	5.122	0.240	Y	0.240	6.884	0.240
Z	0.480	4.482	0.480	Z	0.400	5.446	0.400
a	0.320	3.842	0.640	a	0.400	4.562	0.720
b	0.720	4.082	0.480	b	0.800	4.802	0.480
c	0.480	4.002	0.240	c	0.480	4.722	0.240
d	0.480	4.082	0.720	d	0.480	4.802	0.800
e	0.480	4.082	0.320	e	0.480	4.722	0.320
f	0.320	2.480	0.160	f	0.320	2.882	0.160
g	0.480	4.082	0.720	g	0.480	4.802	0.800
h	0.720	4.082	0.640	h	0.800	4.722	0.720
i	0.720	1.120	0.720	i	0.800	1.280	0.800
j	0.000	2.320	0.720	j	0.000	2.642	0.800
k	0.720	4.322	0.160	k	0.800	5.122	0.160
l	0.720	1.120	0.720	l	0.800	1.280	0.800
m	0.720	6.724	0.640	m	0.800	7.926	0.720
n	0.720	4.082	0.640	n	0.800	4.722	0.720
o	0.480	4.082	0.480	o	0.480	4.882	0.480
p	0.720	4.082	0.480	p	0.800	4.802	0.480
q	0.480	4.082	0.720	q	0.480	4.802	0.800
r	0.720	2.642	0.160	r	0.800	3.042	0.160
s	0.320	3.362	0.240	s	0.320	3.762	0.240
t	0.080	2.882	0.080	t	0.080	3.202	0.080
u	0.640	4.082	0.720	u	0.720	4.722	0.800
v	0.160	4.722	0.160	v	0.160	5.684	0.160
w	0.160	7.524	0.160	w	0.160	9.046	0.160
x	0.000	5.202	0.000	x	0.000	6.244	0.000
y	0.160	4.962	0.160	y	0.160	6.004	0.160
z	0.240	3.362	0.240	z	0.240	4.002	0.240
1	0.720	1.680	0.880	1	0.800	2.000	0.960
2	0.480	4.482	0.480	2	0.800	5.446	0.800
3	0.480	4.482	0.480	3	1.440	5.446	0.800
4	0.240	4.962	0.720	4	0.160	6.004	0.960
5	0.480	4.482	0.480	5	0.800	5.446	0.800
6	0.720	4.482	0.720	6	0.800	5.446	0.800
7	0.240	4.482	0.720	7	0.560	5.446	0.560
8	0.480	4.482	0.480	8	0.800	5.446	0.800
9	0.480	4.482	0.480	9	0.800	5.446	0.800
0	0.720	4.722	0.720	0	0.800	5.684	0.800
-	0.240	2.802	0.240	-	0.240	2.802	0.240

MODEL: Default
FILE NAME: pw:\\IL084EBI0INTEG.illinois.gov:PWIDOT\Documents\IDOT Offices\District 1\Projects\DistStd22x34\CADData\CADsheets\ts02.dgn

USER NAME = footemj	DESIGNED - LP/IP	REVISED - LP 07/01/2015	STATE OF ILLINOIS DEPARTMENT OF TRANSPORTATION
	DRAWN - LP	REVISED -	
PLOT SCALE = 50.0000 ' / in.	CHECKED - IP	REVISED -	
PLOT DATE = 3/4/2019	DATE - 10/01/2014	REVISED -	

DISTRICT ONE
MAST ARM MOUNTED STREET NAME SIGNS

SCALE: | SHEET OF SHEETS | STA. N/A TO STA. N/A

F.A.U RTE.	SECTION	COUNTY	TOTAL SHEETS	SHEET NO.
7008	22-00142-02-PV	COOK	245	131
	TS-02	CONTRACT NO. 61L38		
		ILLINOIS FED. AID PROJECT		

BSD.dgn 3/4/2019 11:09:17 AM User=footemj

TRAFFIC SIGNAL LEGEND

(NOT TO SCALE)

ITEM	EXISTING	PROPOSED
CONTROLLER CABINET		
COMMUNICATION CABINET	CC	CC
MASTER CONTROLLER	MC	MC
MASTER MASTER CONTROLLER	MMC	MMC
UNINTERRUPTABLE POWER SUPPLY		
SERVICE INSTALLATION -(P) POLE MOUNTED	P	P
SERVICE INSTALLATION -(G) GROUND MOUNTED -(GM) GROUND MOUNTED METERED	G GM	G GM
TELEPHONE CONNECTION	ET	T
STEEL MAST ARM ASSEMBLY AND POLE		
ALUMINUM MAST ARM ASSEMBLY AND POLE		
STEEL COMBINATION MAST ARM ASSEMBLY AND POLE WITH LUMINAIRE		
SIGNAL POST -(BM) BARREL MOUNTED - TEMPORARY		BM
WOOD POLE		
GUY WIRE		
SIGNAL HEAD		
SIGNAL HEAD WITH BACKPLATE		
SIGNAL HEAD OPTICALLY PROGRAMMED	P P	P P
FLASHER INSTALLATION -(FS) SOLAR POWERED	F FS F FS	F FS F FS
PEDESTRIAN SIGNAL HEAD		
PEDESTRIAN PUSH BUTTON -(APS) ACCESSIBLE PEDESTRIAN PUSH BUTTON	APS	APS
RADAR DETECTION SENSOR	R	R
VIDEO DETECTION CAMERA	V	V
RADAR/VIDEO DETECTION ZONE		
PAN, TILT, ZOOM (PTZ) CAMERA	PTZ	PTZ
EMERGENCY VEHICLE LIGHT DETECTOR		
CONFIMATION BEACON		
WIRELESS INTERCONNECT		
WIRELESS INTERCONNECT RADIO REPEATER	RR	RR

ITEM	EXISTING	PROPOSED
HANDHOLE -SQUARE -ROUND		
HEAVY DUTY HANDHOLE -SQUARE -ROUND	H	H
DOUBLE HANDHOLE		
JUNCTION BOX		
RAILROAD CANTILEVER MAST ARM		
RAILROAD FLASHING SIGNAL		
RAILROAD CROSSING GATE		
RAILROAD CROSSBUCK		
RAILROAD CONTROLLER CABINET		
UNDERGROUND CONDUIT (UC), GALVANIZED STEEL		
TEMPORARY SPAN WIRE, TETHER WIRE, AND CABLE		
SYSTEM ITEM	S	SP
INTERSECTION ITEM	I	IP
REMOVE ITEM		R
RELOCATE ITEM		RL
ABANDON ITEM		A
CONTROLLER CABINET AND FOUNDATION TO BE REMOVED		RCF
MAST ARM POLE AND FOUNDATION TO BE REMOVED		RMF
SIGNAL POST AND FOUNDATION TO BE REMOVED		RPF
DETECTOR LOOP, TYPE I		
PREFORMED DETECTOR LOOP	P P	P P
SAMPLING (SYSTEM) DETECTOR	S S	S S
INTERSECTION AND SAMPLING (SYSTEM) DETECTOR	IS IS	IS IS
QUEUE AND SAMPLING (SYSTEM) DETECTOR	QS QS	QS QS
WIRELESS DETECTOR SENSOR	W	W
WIRELESS ACCESS POINT		

ITEM	EXISTING	PROPOSED
SIGNAL HEAD -(P) PROGRAMMABLE SIGNAL HEAD	R Y G Y G P	R Y G Y G P
SIGNAL HEAD WITH BACKPLATE -(P) PROGRAMMABLE SIGNAL HEAD -(RB) RETROREFLECTIVE BACKPLATE	R Y G Y G P RB	R Y G Y G P RB
PEDESTRIAN SIGNAL HEAD AT RAILROAD INTERSECTIONS		
PEDESTRIAN SIGNAL HEAD WITH COUNTDOWN TIMER	C D	C D
ILLUMINATED SIGN "NO LEFT TURN"/"NO RIGHT TURN"		
NUMBER OF CONDUCTORS, ELECTRIC CABLE NO. 14, UNLESS NOTED OTHERWISE. ALL DETECTOR LOOP CABLE TO BE SHIELDED	5	5
GROUND CABLE IN CONDUIT, NO. 6 SOLID COPPER (GREEN)	1#6	1#6
ELECTRIC CABLE IN CONDUIT, TRACER NO. 14 1/C	1	1
COAXIAL CABLE	C	C
VENDOR CABLE	V	V
COPPER INTERCONNECT CABLE, NO. 18, 3 PAIR TWISTED, SHIELDED	6#18	6#18
FIBER OPTIC CABLE -NO. 62.5/125, MM12F -NO. 62.5/125, MM12F SM12F -NO. 62.5/125, MM12F SM24F	12F 24F 36F	12F 24F 36F
GROUND ROD -(C) CONTROLLER -(M) MAST ARM -(P) POST -(S) SERVICE	C M P S	C M P S

MODEL: Default
FILE NAME: pw:\\IL084EBIDINTEG.illinois.gov:PWIDOT\Documents\IDOT Offices\District 1\Projects\DistStd22x34\CADData\CADsheets\ts05.dgn

USER NAME = footemj	DESIGNED - IP	REVISED -	
	DRAWN - IP	REVISED -	
PLOT SCALE = 50.0000 ' / in.	CHECKED - LP	REVISED -	
PLOT DATE = 3/4/2019	DATE - 9/29/2016	REVISED -	

STATE OF ILLINOIS
DEPARTMENT OF TRANSPORTATION

DISTRICT ONE
STANDARD TRAFFIC SIGNAL DESIGN DETAILS

SCALE: NONE | SHEET 1 OF 7 SHEETS | STA. N/A TO STA. N/A

F.A.U RTE.	SECTION	COUNTY	TOTAL SHEETS	SHEET NO.
7008	22-00142-02-PV	COOK	245	132
	TS-05	CONTRACT NO. 61L38		
		ILLINOIS	FED. AID PROJECT	

ts05.dgn 3/4/2019 11:21:59 AM User - footemj

LOOP DETECTOR NOTES

1. EACH PAIR OF LOOP WIRES SHALL BE PLACED IN A SEPARATE EMPTY COILABLE NONMETALLIC CONDUIT FROM THE EDGE OF PAVEMENT TO THE HANDHOLE. SPACING BETWEEN THE HOLES DRILLED IN THE PAVEMENT SHALL NOT BE LESS THAN 6" (150 mm). EMPTY COILABLE NONMETALLIC CONDUIT SHALL BE INCLUDED IN THE COST OF THE LOOP WIRE.

2. THE NUMBER OF LOOP TURNS SHALL BE AS RECOMMENDED BY THE AMPLIFIER MANUFACTURER. ALL ADJACENT SIDES OF THE LOOPS SHALL BE INSTALLED IN SUCH A WAY THAT THE CURRENT FLOW IS IN THE SAME DIRECTION TO REINFORCE ITS MAGNETIC FIELDS FOR SMALL VEHICLE DETECTION.

3. EACH LOOP LEAD-IN SHALL BE IDENTIFIED AND PERMANENTLY TAGGED IN THE HANDHOLE. EACH LEAD-IN CABLE TAG SHALL INDICATE THE LOCATION OF THE LOOP, LOOP ROTATION (CLOCKWISE/COUNTERCLOCKWISE), LOOP LEAD-IN DIRECTION (IN OR OUT), LOOP CABLE NUMBER AND LOCATION IN CABINET, AND NUMBER OF TURNS IN THE DETECTOR LOOPS IN WATER PROOF INK AS INDICATED ON THE DISTRICT 1 STANDARD TRAFFIC SIGNAL DESIGN DETAIL. THE CONTRACTOR SHALL MARK LOOP LOCATIONS ON RECORD DRAWINGS AND PRESENT TO THE ENGINEER AFTER FINAL INSPECTION. LOOPS SHALL BE MARKED BY LANE AND LOOP NUMBER. SEE DETAIL BELOW.

4. ALL LOOP CABLE SHALL BE FASTENED WITH PLASTIC TIE WRAP TO THE HANDHOLE HOOKS.

5. IN ASPHALT PAVEMENT, LOOPS SHOULD BE PLACED IN THE BINDER AND DIVEHOLES MARKED AT THE CURB WITH A SAW-CUT. THE SAW-CUT SHALL BE CUT IN ACCORDANCE WITH LOCAL AND E.P.A. DUST CONTROL REQUIREMENTS. DETECTOR LOOP(S) SHALL NOT BE INSTALLED IN WET CONDITIONS AND THE SAW-CUTS MUST BE FREE OF DEBRIS AND RESIDUE SUCH AS DUST AND WATER WHICH IS TO BE ACHIEVED BY THE USE OF COMPRESSED AIR, WIRE BRUSHING AND HEAT DRYING ACCORDING TO SEALANT MANUFACTURER REQUIREMENTS. THE DETECTOR WIRE SHALL BE HELD IN PLACE BY THE USE OF FORM WEDGES. WEDGES SHALL BE SPACED NO MORE THAN 18" (450 mm) APART.

6. LOOP SPLICES SHALL BE SOLDERED USING A SOLDERING IRON. BLOW TORCHES OR OTHER DEVICES WHICH OXIDIZE COPPER CABLE SHALL NOT BE ALLOWED FOR SOLDERING OPERATIONS. SEE DETAIL BELOW RIGHT.

7. PREFORMED DETECTOR LOOPS SHALL BE USED, AS SHOWN ON THE PLANS, WHERE NEW CONCRETE PAVEMENT IS PROPOSED. THE INSTALLATION OF PREFORMED LOOPS SHALL BE IN ACCORDANCE WITH THE DISTRICT 1 SPECIFICATIONS OR AS DIRECTED BY THE ENGINEER.

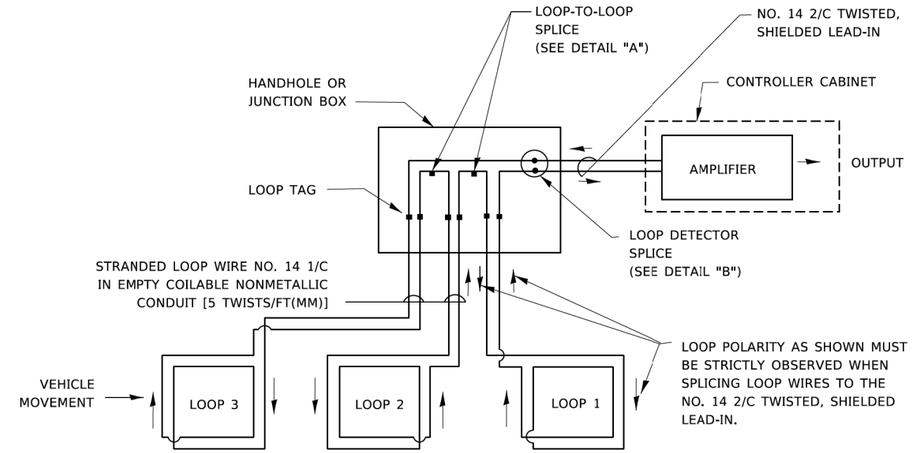

DETECTOR LOOP WIRING SCHEMATIC

- LOOPS SHALL BE SPLICED IN SERIES. SAW-CUTS SHALL BE A MINIMUM WIDTH OF 5/16" (8 mm).
- SAW-CUT DEPTHS SHALL BE 3" (75 mm). IF IN CONCRETE,
- THE SAW-CUT DEPTH SHALL BE TO THE TOP OF THE REINFORCEMENT.
- LOOP CORNERS SHALL BE DRILLED WITH A 2" (50 mm) DIAMETER CORE.

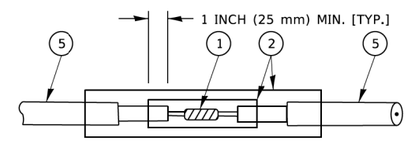

DETAIL "A"
LOOP-TO-LOOP SPLICE

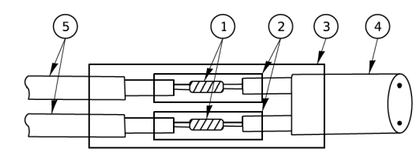

DETAIL "B"
LOOP-TO-CONTROLLER SPLICE

TYPE I LOOP

LOOP LEAD-IN CABLE TAG

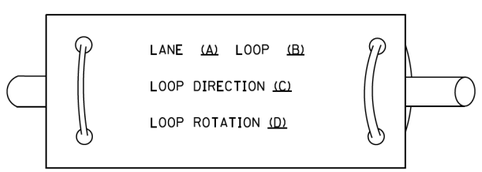

A. LANE 1 IS THE LANE CLOSEST TO THE CENTERLINE OF THE ROADWAY

B. LOOP #1 IS THE LOOP IN THE LANE CLOSEST TO THE INTERSECTION.

C. LABEL LOOP CABLE "IN" OR LOOP CABLE "OUT".

D. LABEL LOOP CABLE CLOCKWISE OR LOOP CABLE COUNTERCLOCKWISE.

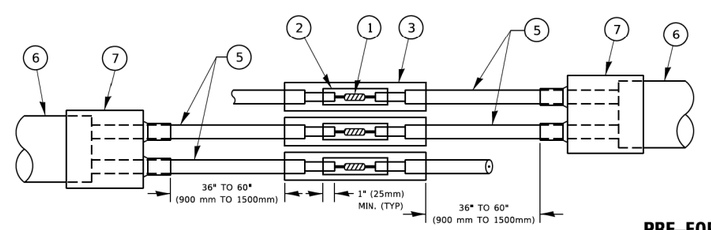

DETAIL "A"
LOOP-TO-LOOP SPLICE

PRE-FORMED LOOP

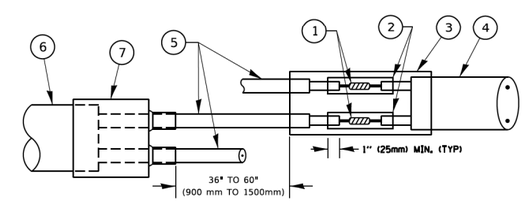

DETAIL "B"
LOOP-TO-CONTROLLER SPLICE

LOOP DETECTOR SPLICE

1. WESTERN UNION SPLICE SOLDERED WITH ROSIN CORE FLUX. ALL EXPOSED SURFACES OF THE SOLDER SHALL BE SMOOTH. THE WESTERN UNION SPLICES SHALL BE STAGGERED.
2. WCSMW 30/100 HEAT SHRINK TUBE, MINIMUM LENGTH 3" (75 mm), UNDERWATER GRADE.
3. WCS 200/750 HEAT SHRINK TUBE, MINIMUM LENGHT 6" (150 mm), UNDERWATER GRADE.
4. NO. 14 2/C TWISTED, SHIELDED CABLE.
5. LOOP CONDUCTOR WITH FLEXIBLE PLASTIC TUBE. PRE-FORMED LOOP
6. XL POLYOLEFIN 2 CONDUCTOR
7. BREAKOUT SEALS. TYCO CBR-2 OR APPROVED EQUAL

TRAFFIC SIGNAL MAST ARM AND SIGNAL POST

MAST ARM MOUNTED SIGNALS IN EXISTING, PROPOSED OR FUTURE SIDEWALK/BICYCLE PATH AREA. INTERSECTION SHOWN WITH PEDESTRIAN SIGNALS AND PEDESTRIAN PUSHBUTTON DETECTORS.

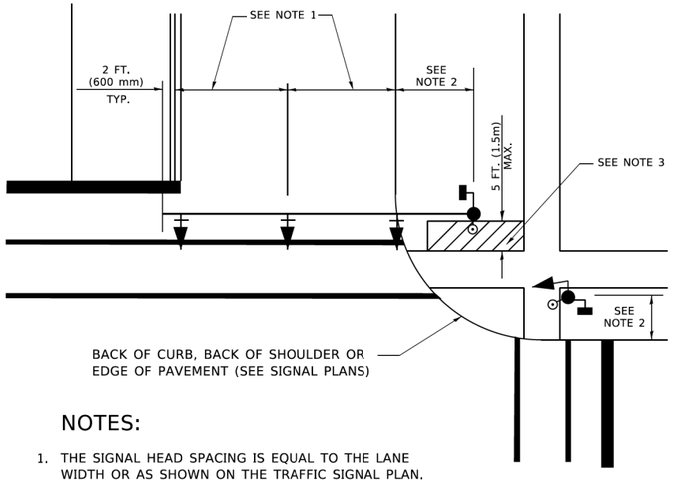

NOTES:

1. THE SIGNAL HEAD SPACING IS EQUAL TO THE LANE WIDTH OR AS SHOWN ON THE TRAFFIC SIGNAL PLAN.
2. REFER TO THE TRAFFIC SIGNAL EQUIPMENT OFFSET TABLE.
3. PROVIDE A LEVEL ALL-WEATHER SURFACE (CONCRETE SIDEWALK, ASPHALT BICYCLE PATH SURFACE OR MATCHING MATERIAL TO THE ADJACENT SURFACE) UP TO THE MAST ARM SHAFT OR THE SIGNAL POST.
4. THE FACE OF THE PEDESTRIAN PUSHBUTTON SHALL BE PARALLEL TO THE CROSSWALK TO BE USED.
5. THE LOCATIONS AND INSTALLATION OF PEDESTRIAN SIGNAL HEADS AND PEDESTRIAN PUSHBUTTONS SHALL MEET THE REQUIREMENTS OF THE MUTCD AND INFORMATION FOUND IN THE "AMERICANS WITH DISABILITIES ACT ACCESSIBILITY GUIDELINES FOR BUILDINGS AND FACILITIES."

PEDESTRIAN SIGNAL POST AND PEDESTRIAN PUSH BUTTON POST

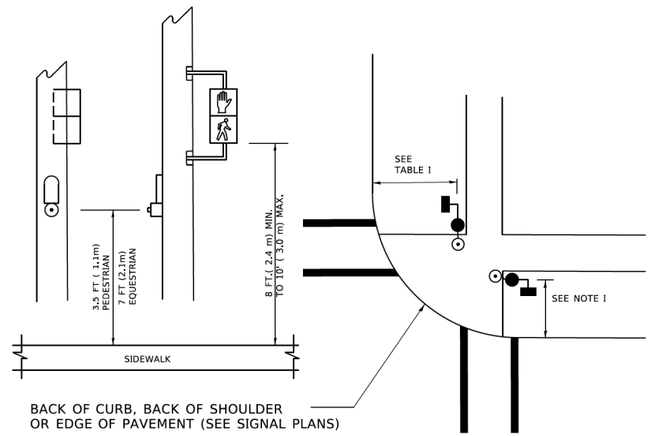

NOTES:

1. REFER TO THE TRAFFIC SIGNAL EQUIPMENT OFFSET TABLE.
2. PROVIDE A LEVEL ALL-WEATHER SURFACE (CONCRETE SIDEWALK, ASPHALT BICYCLE PATH SURFACE OR MATCHING MATERIAL TO THE ADJACENT SURFACE) UP TO THE PEDESTRIAN SIGNAL POST OR THE PEDESTRIAN PUSH BUTTON POST.
3. THE FACE OF THE PEDESTRIAN PUSHBUTTON SHALL BE PARALLEL TO THE CROSSWALK TO BE USED.
4. THE LOCATIONS AND INSTALLATION OF PEDESTRIAN SIGNAL HEADS AND PEDESTRIAN PUSHBUTTONS SHALL MEET THE REQUIREMENTS OF THE MUTCD AND INFORMATION FOUND IN THE "AMERICANS WITH DISABILITIES ACT ACCESSIBILITY GUIDELINES FOR BUILDINGS AND FACILITIES."

RECOMMENDED PUSHBUTTON LOCATIONS

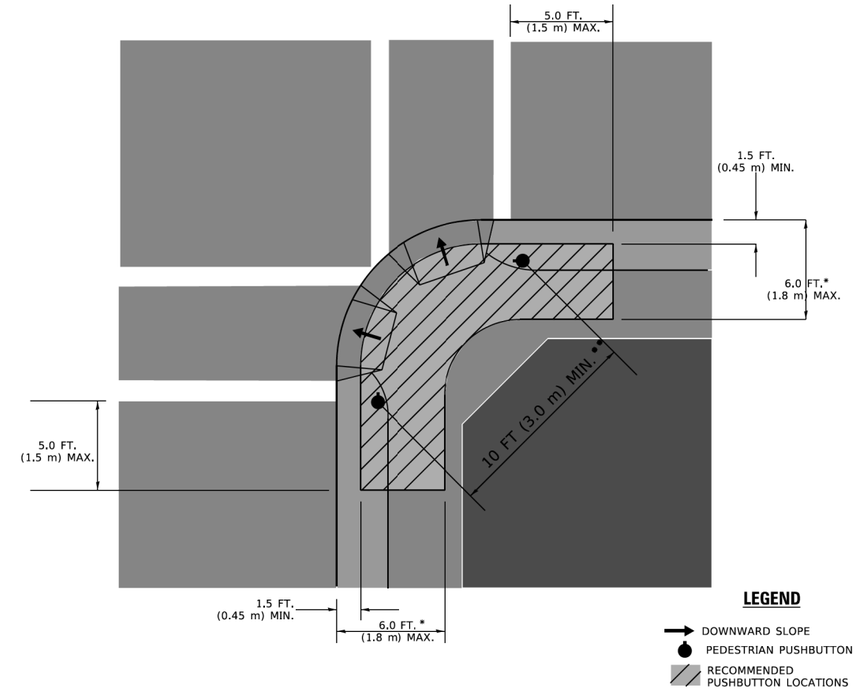

* WHERE THERE ARE CONSTRAINTS THAT MAKE IT IMPRACTICAL TO PLACE THE PEDESTRIAN PUSHBUTTON BETWEEN 1.5 FT (0.45 m) AND 6 FT (1.8 m) FROM THE EDGE OF THE CURB, SHOULDER, OR PAVEMENT, IT SHOULD NOT BE FURTHER THAN 10 FT (3 m) FROM THE EDGE OF CURB, SHOULDER, OR PAVEMENT.

** WHERE THERE ARE CONSTRAINTS ON A PARTICULAR CORNER THAT MAKE IT IMPRACTICAL TO PROVIDE THE 10 FT (3 m) SEPERATION BETWEEN THE TWO PEDESTRIAN PUSHBUTTONS, THE PUSHBUTTONS MAY BE PLACED CLOSER TOGETHER OR ON THE SAME POLE.

NOTES:

1. PEDESTRIAN SIGNAL HEADS SHALL BE MOUNTED WITH THE BOTTOM OF THE SIGNAL HOUSING INCLUDING BRACKETS NOT LESS THAN 8 FT (2.4 m) OR MORE THAN 10 FT (3 m) ABOVE SIDEWALK LEVEL, AND SHALL BE POSITIONED AND ADJUSTED TO PROVIDE MAXIMUM VISIBILITY AT THE BEGINNING OF THE CONTROLLED CROSSWALK.
2. THE BOTTOM OF THE SIGNAL HOUSING (INCLUDING BRACKETS) OF A VEHICULAR SIGNAL FACE THAT IS NOT LOCATED OVER A HIGHWAY SHALL BE AT LEAST 8 FT (2.4 m) BUT NOT MORE THAN 19 FT (5.8 m) ABOVE THE SIDEWALK OR, IF THERE IS NO SIDEWALK, ABOVE THE PAVEMENT GRADE AT THE CENTER OF THE ROADWAY.
3. THE BOTTOM OF THE SIGNAL HOUSING AND ANY RELATED ATTACHMENTS TO A SIGNAL FACE LOCATED OVER ANY PORTION OF A HIGHWAY SHALL BE ACCORDING TO CURRENT STATE STANDARDS 877001, 877002, 877006, 877011 AND 877012 WITH A MINIMUM OF 16 FT (5.0 m) AND A MAXIMUM OF 18 FT. (5.5 m) FROM THE HIGHEST POINT OF PAVEMENT.
4. THE BOTTOM OF THE TEMPORARY SPAN WIRE MOUNTED SIGNAL HOUSING AND ANY RELATED ATTACHMENTS TO A SIGNAL FACE LOCATED OVER ANY PORTION OF A HIGHWAY SHALL BE ACCORDING TO CURRENT STATE STANDARD 880001 WITH A MINIMUM OF 17 FT (5.18 m) FROM THE HIGHEST POINT OF PAVEMENT.
5. THE TOP OF THE SIGNAL HOUSING OF A SIGNAL FACE LOCATED OVER ANY PORTION OF A HIGHWAY SHALL NOT BE MORE THAN 25.6 FT (7.8 m) ABOVE THE PAVEMENT.

TRAFFIC SIGNAL EQUIPMENT OFFSET

TRAFFIC SIGNAL EQUIPMENT	COMBINATION CONCRETE CURB AND GUTTER (MINIMUM DISTANCE FROM BACK OF CURB TO CENTERLINE OF FOUNDATION)	SHOULDER/NON-CURBED AREA (MINIMUM DISTANCE FROM EDGE OF PAVEMENT TO CENTERLINE OF FOUNDATION)
TRAFFIC SIGNAL MAST ARM POLE	6 FT (1.8m)	SHOULDER WIDTH + 2 FT (0.6m), MINIMUM 10 FT (3.0m)
TRAFFIC SIGNAL POST	4 FT (1.2m)	SHOULDER WIDTH + 2 FT (0.6m), MINIMUM 10 FT (3.0m)
PEDESTRIAN SIGNAL POST	4 FT (1.2m)	SHOULDER WIDTH + 2 FT (0.6m), MINIMUM 10 FT (3.0m)
PEDESTRIAN PUSHBUTTON POST	4 FT (1.2m)	SHOULDER WIDTH + 2 FT (0.6m), MINIMUM 10 FT (3.0m)
TEMPORARY WOOD POLE	6 FT (1.8m)	SHOULDER WIDTH + 2 FT (0.6m), MINIMUM 10 FT (3.0m)
CONTROLLER CABINET	6 FT (1.8m) MINIMUM DISTANCE SEE NOTE 2	SHOULDER WIDTH + 6 FT (1.8m), MINIMUM 16 FT (4.9m) SEE NOTE 3.
SERVICE INSTALLATION, GROUND MOUNT	6 FT (1.8m) MINIMUM DISTANCE SEE NOTE 2	SHOULDER WIDTH + 6 FT (1.8m), MINIMUM 16 FT (4.9m) SEE NOTE 3.

NOTES:

1. CONTACT THE "AREA TRAFFIC SIGNAL MAINTENANCE AND OPERATIONS ENGINEER" FOR ASSISTANCE IN LOCATING THE TRAFFIC SIGNAL EQUIPMENT WHEN THERE ARE CONFLICTS WITH DITCHES OR THE MINIMUM OFFSET DISTANCES CANNOT BE MET.
2. MINIMUM DISTANCE FROM THE BACK OF CURB TO THE ROADWAY SIDE OF THE FOUNDATION.
3. MINIMUM DISTANCE FROM THE EDGE OF PAVEMENT TOTHE ROADWAY SIDE OF THE FOUNDATION.
4. ANY CHANGES TO THE OFFSETS OF THE FOUNDATIONS, FROM THE MINIMUM DISTANCES LISTED IN THE "TRAFFIC SIGNAL EQUIPMENT OFFSET" CHART AND THE TRAFFIC SIGNAL INSTALLATION PLAN, COULD EFFECT THE PLACEMENT OF THE SIGNAL HEADS, PEDESTRIAN SIGNAL HEADS AND THE PEDESTRIAN PUSHBUTTONS. THE SIGNAL HEAD PLACEMENT ON THE MAST ARMS SHALL REMAIN AS PER THE TRAFFIC SIGNAL INSTALLATION PLAN AND THE "TRAFFIC SIGNAL MAST ARM AND SIGNAL POST" DETAIL ABOVE. THE PROPOSED MAST ARM LENGTHS MAY NEED TO BE REVISED TO MEET THE ABOVE REQUIREMENTS. THE PEDESTRIAN SIGNAL HEADS AND PEDESTRIAN PUSHBUTTONS MUST MEET THE REQUIREMENTS UNDER THE DETAILS ON THIS SHEET.

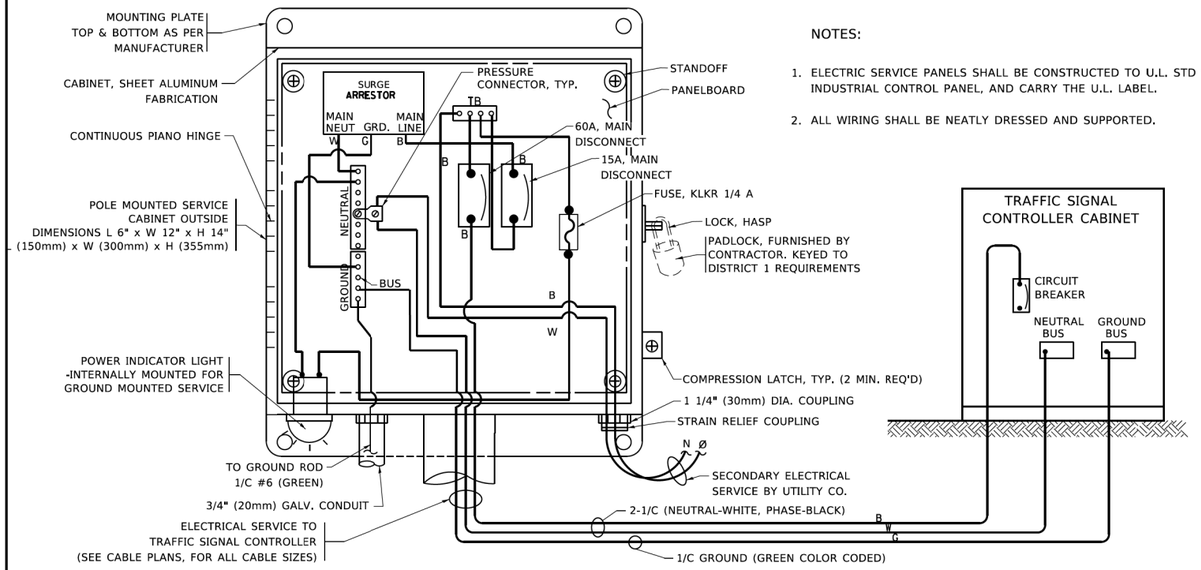

NOTES:

1. ELECTRIC SERVICE PANELS SHALL BE CONSTRUCTED TO U.L. STD 508, INDUSTRIAL CONTROL PANEL, AND CARRY THE U.L. LABEL.
2. ALL WIRING SHALL BE NEATLY DRESSED AND SUPPORTED.

ELECTRICAL SERVICE – PANEL DIAGRAM (TYPICAL FOR POLE AND GROUND MOUNTED SERVICE)

SERVICE INSTALLATION POLE MOUNT (SHOWN)

(NOT TO SCALE)

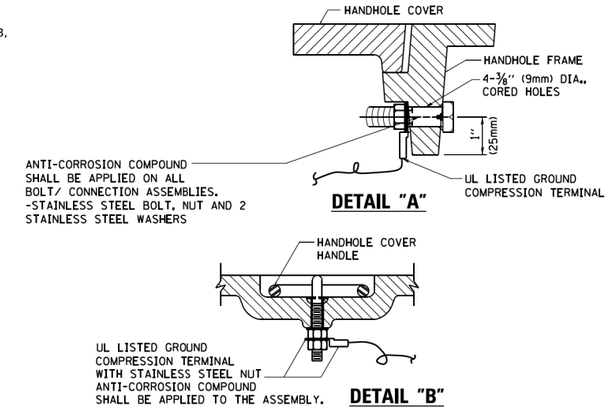

NOTES:

GROUNDING SYSTEM

1. THE GROUNDING SYSTEM SHALL CONSIST OF AN INSULATED CONDUCTOR TYPE XLP, NO. 6 A.W.G., STRANDED COPPER TO BE INSTALLED IN RACEWAYS. THE GROUNDING CABLE SHALL BE INSTALLED IN A CONTINUOUS MANNER AS SHOWN ON THE CABLE PLAN PROVIDED. ALL GROUNDING CONDUCTORS SHALL BE BONDED TO METAL ENCLOSURE (HANDHOLE, POST, MAST ARM, CONTROLLER, ETC,). GROUND ROD SHALL BE 3/4" DIA. x 10'-0" (20mm x 3.0m) LONG, COPPER CLAD. ONE GROUND ROD SHALL BE INSTALLED AT ALL POST FOUNDATIONS, POLE FOUNDATIONS, CONTROLLER CABINET FOUNDATION AND ELECTRICAL SERVICE INSTALLATION AS INDICATED ON THE CABLE PLAN. IF THERE ARE ANY SPECIAL CONDITIONS SUCH AS SUB-SURFACE CONDITIONS OR INSTALLATION PROBLEMS, THE RESIDENT ENGINEER SHALL BE NOTIFIED OR CONTACT THE BUREAU OF TRAFFIC, ILLINOIS DEPARTMENT OF TRANSPORTATION DISTRICT ONE AT (847) 705-4139.
2. THE NEUTRAL CONDUCTOR AND THE GROUND CONDUCTOR SHALL BE CONNECTED IN THE SERVICE INSTALLATION. AT NO OTHER POINT IN THE TRAFFIC SIGNAL SYSTEM SHALL THE NEUTRAL AND GROUND CONDUCTORS BE CONNECTED.
3. ALL EQUIPMENT GROUNDING CONDUCTORS SHALL TERMINATE AT THE GROUND BUS IN THE CONTROLLER CABINET.
4. THE CONTRACTOR SHALL PROVIDE A GROUND CABLE WITH CONNECTORS BETWEEN THE HANDHOLE COVER AND HANDHOLE FRAME.

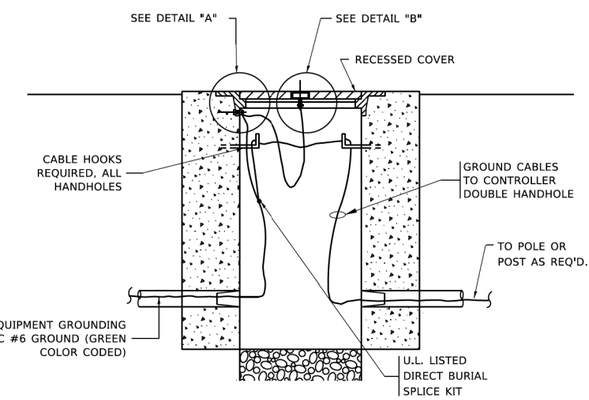

HANDHOLE COVER & FRAME – GROUNDING DETAIL

(NOT TO SCALE)

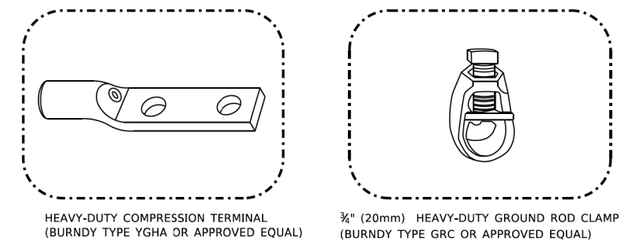

NOTES:

- ALL CLAMPS SHALL BE BRONZE OR COPPER, UL APPROVED.
- GROUND CABLE SHALL BE LOOPED OVER HOOKS IN THE HANDHOLES
  6.5' (2.0m) SLACK SHALL BE PROVIDED IN SINGLE HANDHOLES
  13' (4.0m) OF SLACK SHALL BE PROVIDED IN DOUBLE HANDHOLES.
  5' (1.4m) OF SLACK SHALL BE PROVIDED BETWEEN FRAME AND COVER.

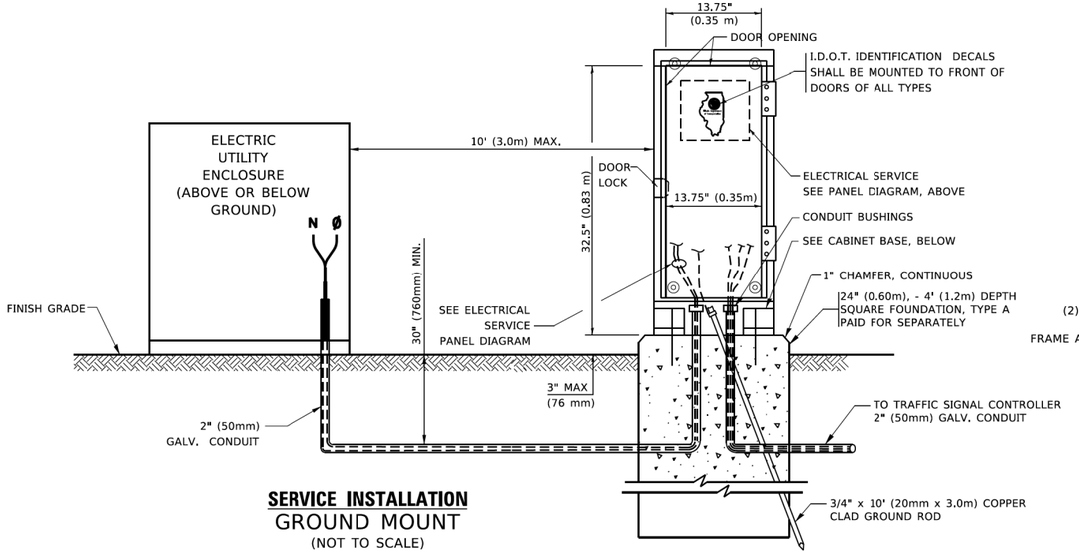

SERVICE INSTALLATION

GROUND MOUNT

(NOT TO SCALE)

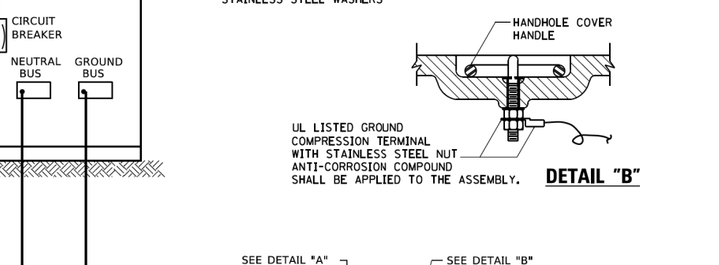

EXISTING HANDHOLE COVER & FRAME – GROUNDING DETAIL

(NOT TO SCALE)

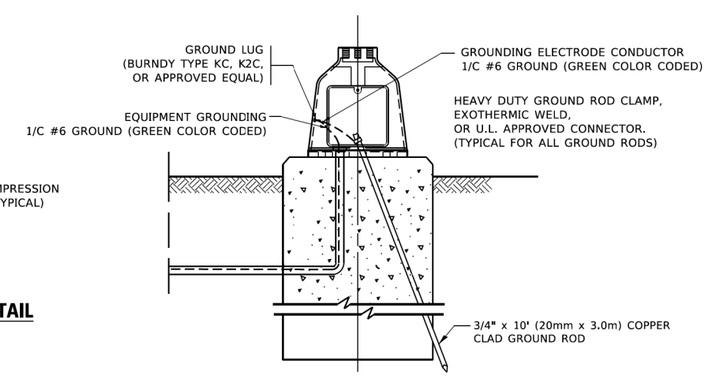

MAST ARM POLE /POST–GROUNDING DETAIL

(NOT TO SCALE)

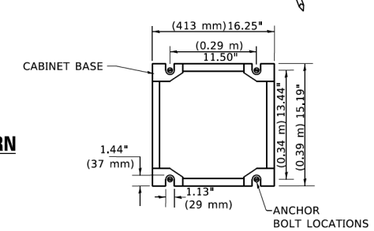

CABINET – BASE BOLT PATTERN

(NOT TO SCALE)

MODEL: Default
FILE NAME: pw:\\IL084EBIDINTEG.illinois.gov:PWIDOT\Documents\IDOT Offices\District 1\Projects\Dist51d22x34\CADData\CADsheets\ts05.dgn

USER NAME = footemj	DESIGNED -	REVISED -	STATE OF ILLINOIS DEPARTMENT OF TRANSPORTATION
	DRAWN -	REVISED -	
PLOT SCALE = 50.0000 ' / in.	CHECKED -	REVISED -	
PLOT DATE = 3/4/2019	DATE -	REVISED -	

DISTRICT ONE
STANDARD TRAFFIC SIGNAL DESIGN DETAILS

SCALE: NONE | SHEET 4 OF 7 SHEETS | STA. N/A TO STA. N/A

F.A.U RTE.	SECTION	COUNTY	TOTAL SHEETS	SHEET NO.
7008	22-00142-02-PV	COOK	245	135
	TS-05	CONTRACT NO. 61L38		
		ILLINOIS FED. AID PROJECT		

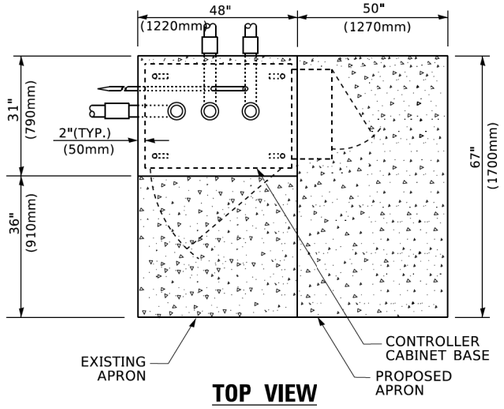

TOP VIEW

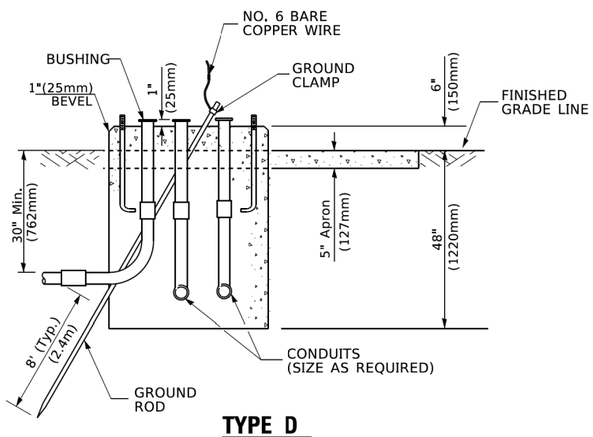

TYPE D
FOR GROUND MOUNTED
CONTROLLER CABINET
AND UPS BATTERY CABINET

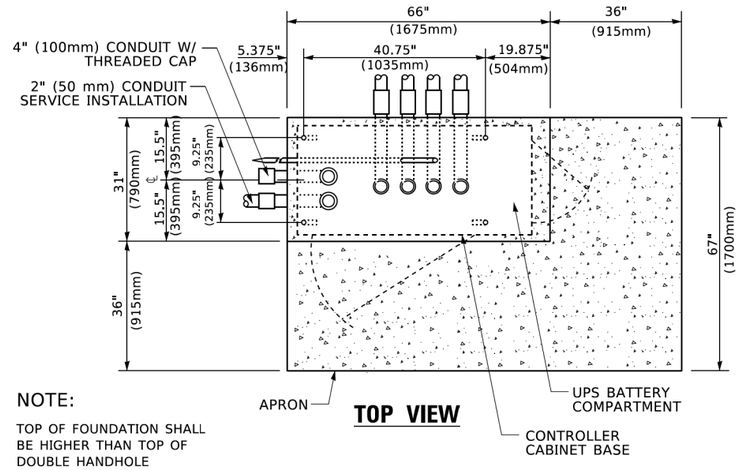

NOTE:

TOP OF FOUNDATION SHALL BE HIGHER THAN TOP OF DOUBLE HANDHOLE

TOP VIEW

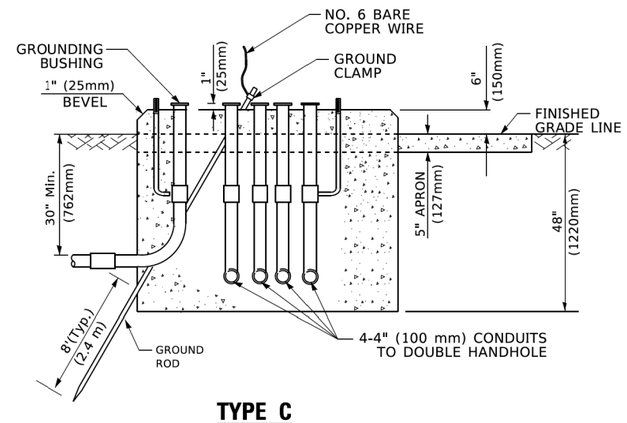

TYPE C
FOR GROUND MOUNTED
SUPER P (TYPE IV) AND SUPER R (TYPE V)
CONTROLLER CABINETS

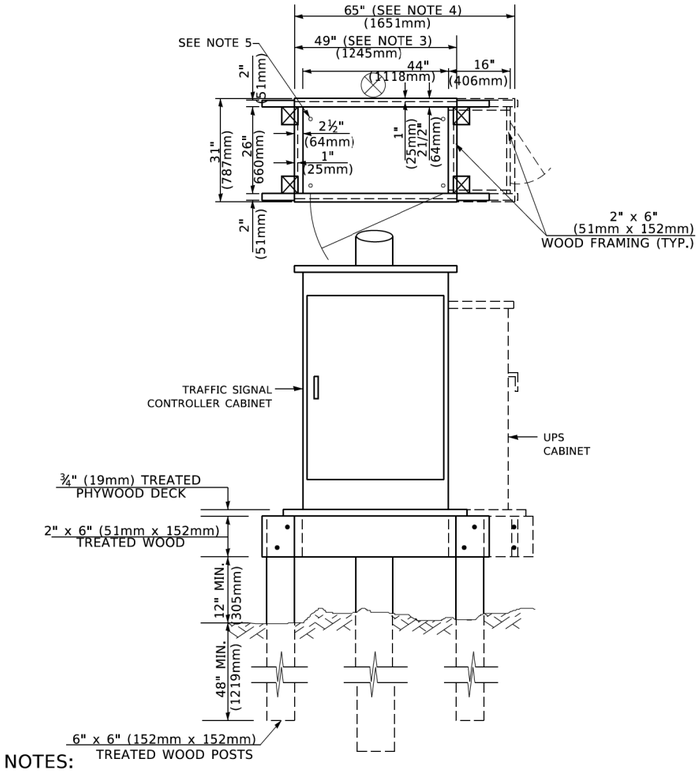

NOTES:

1. BASED ON CONTROLLER CABINET TYPE IV WITH BASE DIMENSIONS OF 26" x 44" (660mm x 1118mm). ADJUST PLATFORM SIZE TO FIT CABINET BASE DIMENSIONS BEING SUPPLIED
2. BASED ON UNINTERRUPTIBLE POWER SUPPLY CABINET WITH BASE DIMENSIONS OF 16" x 25" (406mm x 635mm). ADJUST PLATFORM SIZE TO FIT CABINET BASE DIMENSIONS BEING SUPPLIED.
3. PLATFORM SIZE FOR CONTROLLER CABINET TYPE IV.
4. PLATFORM SIZE FOR CONTROLLER CABINET TYPE IV AND UNINTERRUPTIBLE POWER SUPPLY CABINET.
5. DRILLED HOLES THROUGH THE PLATFORM BASE TO MATCH THE CONTROLLER CABINET BOLT TEMPLATE. FASTEN THE CONTROLLER CABINET TO THE PLATFORM WITH CARRIAGE BOLTS, WASHERS AND NUTS.
6. FASTEN ALL SUPPORT WOOD FRAMING TO THE WOOD POSTS WITH 2 LAG SCREWS FOR EACH CONNECTION..

TEMPORARY SIGNAL CONTROLLER
WOOD SUPPORT PLATFORM

CABLE SLACK LENGTH	FEET	METER
HANDHOLE	6.5	2.0
DOUBLE HANDHOLE	13.0	4.0
SIGNAL POST	2.0	0.6
MAST ARM	2.0	0.6
CONTROLLER CABINET	1.5	0.5
FIBER OPTIC AT CABINET	13.0	4.0
ELECTRIC SERVICE AT (CABINET OR SERVICE LOCATION)	1.5	0.5
GROUND CABLE (SIGNAL POST, MAST ARM, CABINET)	1.5	0.5
GROUND CABLE (BETWEEN FRAME AND COVER)	5.0	1.6

CABLE SLACK

VERTICAL CABLE LENGTH	FEET	METER
MAST ARM POLE (MAST ARM MOUNTED SIGNAL HEAD) (L = MAST ARM LENGTH - DISTANCE TO SIGNAL HEAD FROM END OF ARM)	20.0+L	6.0+L
BRACKET MOUNTED (MAST ARM POLE OR SIGNAL POLE)	13.0	4.0
PEDESTRIAN PUSH BUTTON	6.0	2.0
SERVICE INSTALLATION POLE MOUNT TO SERVICE DROP	13.5	4.1
SERVICE INSTALLATION POLE MOUNT TO GROUND	13.5	4.1
SERVICE INSTALLATION GROUND MOUNT	6.0	2.0
FOUNDATION (SIGNAL POST, MAST ARM POLE, CONTROLLER CABINET, SERVICE-GROUND MOUNT)	3.0	1.0

VERTICAL CABLE LENGTH

FOUNDATION	DEPTH
TYPE A - Signal Post	4'-0" (1.2m)
TYPE C - CONTROLLER W/ UPS	4'-0" (1.2m)
TYPE D - CONTROLLER	4'-0" (1.2m)
SERVICE INSTALLATION, GROUND MOUNT, TYPE A - SQUARE	4'-0" (1.2m)

DEPTH OF FOUNDATION

Mast Arm Length	① Foundation Depth	Foundation Diameter	Spiral Diameter	Quantity of Rebars	Size of Rebars
Less than 30' (9.1 m)	10'-0" (3.0 m)	30" (750mm)	24" (600mm)	8	6(19)
Greater than or equal to 30' (9.1 m) and less than 40' (12.2 m)	13'-6" (4.1 m)	30" (750mm)	24" (600mm)	8	6(19)
	11'-0" (3.4 m)	36" (900mm)	30" (750mm)	12	7(22)
Greater than or equal to 40' (12.2 m) and less than 50' (15.2 m)	13'-0" (4.0 m)	36" (900mm)	30" (750mm)	12	7(22)
Greater than or equal to 50' (15.2 m) and up to 55' (16.8 m)	15'-0" (4.6 m)	36" (900mm)	30" (750mm)	12	7(22)
Greater than or equal to 56' (16.8 m) and less than 65' (19.8 m)	21'-0" (6.4 m)	42" (1060mm)	36" (900mm)	16	8(25)
Greater than or equal to 65' (19.8 m) and up to 75' (22.9 m)	25'-0" (7.6 m)	42" (1060mm)	36" (900mm)	16	8(25)

NOTES:

1. These foundation depths are for sites which have cohesive soils (clayey silt, sandy clay, etc.) along the length of the shaft, with an average Unconfined Compressive Strength (Qu) > 1.0 tsf (100 kpa). This strength shall be verified by boring data prior to construction or with testing by the Engineer during foundation drilling. The Bureau of Bridges & structures should be contacted for a revised design if other conditions are encountered.
2. Combination mast arm assemblies under 55 feet (16.8 m) shall use 36" (900 mm) diameter foundations.
3. Combination mast arm assemblies under 56 feet (16.8 m) through 75 feet (22.9 m) shall use 42" (1060 mm) diameter foundations
4. For mast arm assemblies with dual arms refer to state standard 878001..

DEPTH OF MAST ARM FOUNDATIONS, TYPE E

MODEL: Default
FILE NAME: pw:\\IL084EBIDINTEG.illinois.gov:PWIDOT\Documents\IDOT Offices\District 1\Projects\Dist15d22x34\CADData\CADsheets\ts05.dgn

USER NAME = footemj	DESIGNED -	REVISED -	
	DRAWN -	REVISED -	
PLOT SCALE = 50.0000 ' / in.	CHECKED -	REVISED -	
PLOT DATE = 3/4/2019	DATE -	REVISED -	

STATE OF ILLINOIS
DEPARTMENT OF TRANSPORTATION

DISTRICT ONE
STANDARD TRAFFIC SIGNAL DESIGN DETAILS

SCALE: NONE | SHEET 5 OF 7 SHEETS | STA. N/A TO STA. N/A

F.A.U RTE.	SECTION	COUNTY	TOTAL SHEETS	SHEET NO.
7008	22-00142-02-PV	COOK	245	136
	TS-05	CONTRACT NO. 61L38		
	ILLINOIS FED. AID PROJECT			

ts05.dgn 3/4/2019 11:23:29 AM Uses: footemj

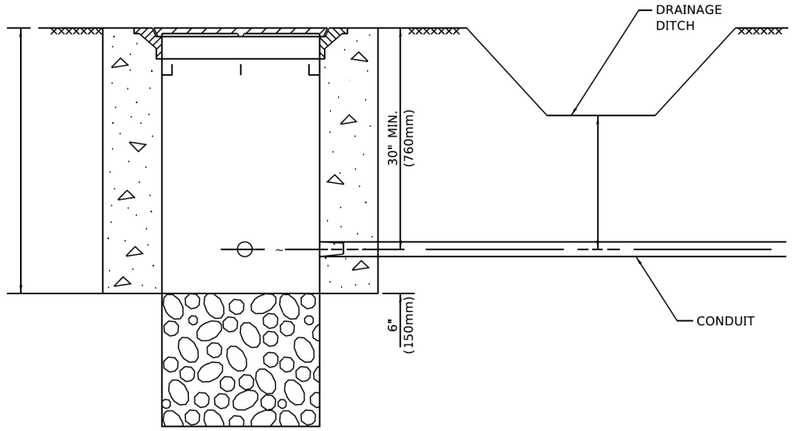

NOTES:

1. CONDUIT DEPTH SHALL BE A MINIMUM OF 30" (760mm) BELOW THE BOTTOM OF THE DRAINAGE DITCH OR ANY SLOPING GROUND
2. THE MINIMUM CONDUIT DEPTH APPLIES TO ALL CONDUIT PLACED UNDER ROADWAY PAVEMENT, MULTI-USE PATHS, SIDEWALKS AND SOIL SURFACES.
3. THE MINIMUM CONDUIT DEPTH APPLIES TO ALL HANDHOLES, HEAVY DUTY HANDHOLES AND DOUBLE HANDHOLES.

HANDHOLE WITH MINIMUM CONDUIT DEPTH

(NOT TO SCALE)

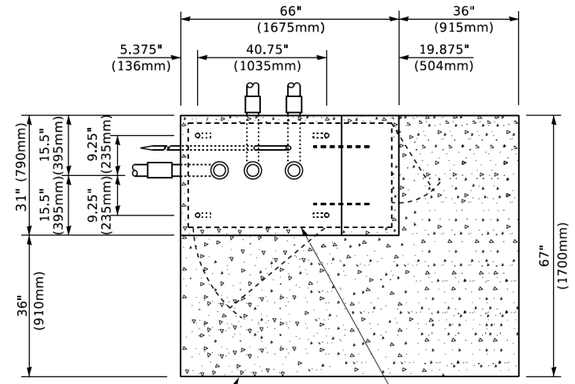

TOP VIEW

(NOT TO SCALE)

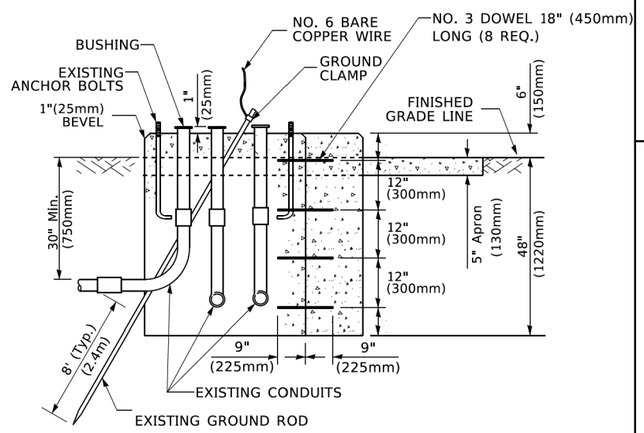

MODIFY EXISTING TYPE "D" FOUNDATION TO TYPE "C" FOUNDATION

(NOT TO SCALE)

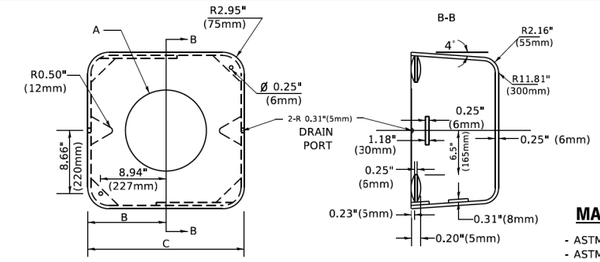

MATERIAL

- ASTM A36 STEEL
- ASTM A-123 HOT DIPPED GALVANIZED

A	B	C	HEIGHT	WEIGHT
VARIES	9.5"(241mm)	19"(483mm)	7" (178mm) - 12" (300mm)	53 lbs (24kg)
VARIES	10.75"(273mm)	21.5"(546mm)	7" (178mm) - 12" (300mm)	68 lbs (31 kg)
VARIES	13.0"(330mm)	26"(660mm)	7" (178mm) - 12" (300mm)	81 lbs (37 kg)
VARIES	18.5"(470mm)	37"(940mm)	7" (178mm) - 12" (300mm)	126 lbs (57 kg)

SHROUD

NOTES:

1. DIMENSION "A" IS EQUAL TO THE DIAMETER OF THE MAST ARM POLE AT THE TOP OF THE SHROUD. THE SHROUD SHALL BE TIGHT TO THE MAST ARM POLE.
2. THE SUPPLIER SHALL VERIFIED THE ABOVE DIMENSIONS BASED ON MAST ARM REQUIREMENTS.
3. THE HEIGHT OF THE SHROUD SHALL COVER THE ANCHOR BOLTS, NUTS AND MAST ARM POLE BASE.

NOTE:

SUPPORT EXISTING CABINET AND CONTROL EQUIPMENT ABOVE FOUNDATION TO KEEP TRAFFIC SIGNAL FUNCTIONING WHILE FOUNDATION MODIFICATION WORK IS PROCEEDING.

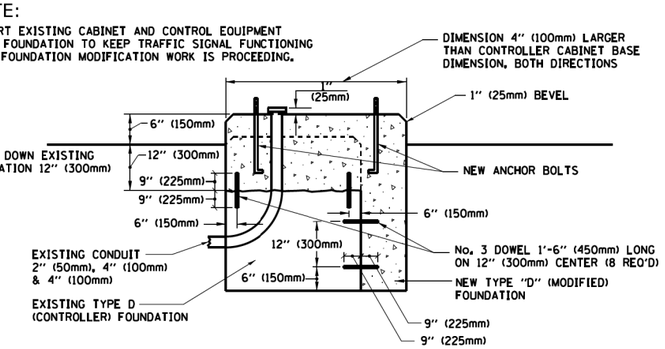

MODIFY EXISTING TYPE "D" FOUNDATION

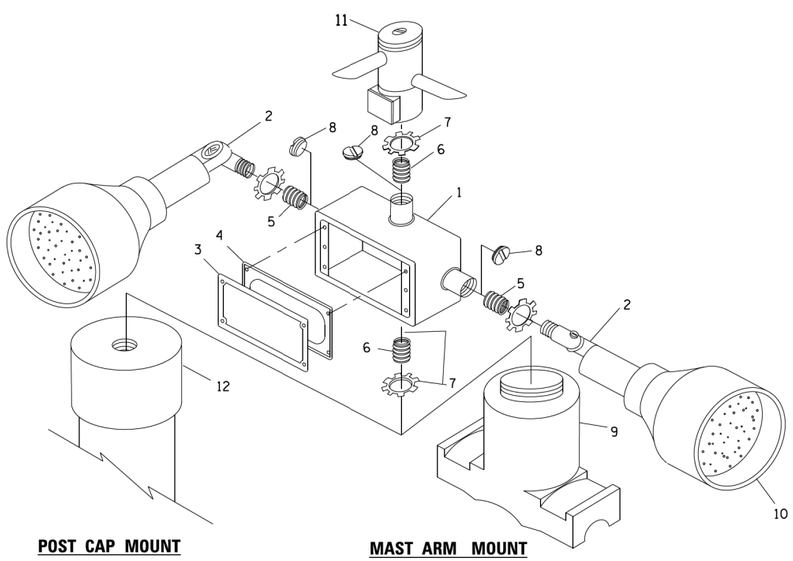

POST CAP MOUNT **MAST ARM MOUNT**

EMERGENCY VEHICLE DETECTOR WITH CONFIRMATION BEACON MOUNTING DETAIL

ITEM NO.	IDENTIFICATION
1	OUTLET BOX- GALV. 21 CU.IN. (0.000344 CU-M)
2	LAMP HOLDER AND COVER
3	OUTLET BOX COVER
4	RUBBER COVER GASKET
5	REDUCING BUSHING
6	¾"(19 mm) CLOSE NIPPLE
7	¾"(19 mm) LOCKNUT
8	¾"(19 mm) HOLE PLUG
9	SADDLE BRACKET - GALV.
10	6 WATT PAR 38 LED FLOOD LAMP
11	DETECTOR UNIT
12	POST CAP [18 FT. (5.4 m) POST MIN.]

NOTES:

1. ALL ELECTRICAL ITEMS, EXCEPT ITEMS #2 AND #11 SHALL BE ALUMINUM OR GALVANIZED
2. ITEM #1- OZ/GEDNEY FSX-1-50 OR EQUIVALENT
   ITEM #2- MULBERRY CON-O-SHADE LAMP SHIELD OR EQUIVALENT
   ITEM #9- "BAND-IT" SADDLE BRACKET OR EQUIVALENT
3. WHEN POST MOUNTING IS SPECIFIED, ITEM #9 SHALL NOT BE REQUIRED. THE DETECTION UNIT SHALL BE MOUNTED DIRECTLY ON TOP OF THE CAP BY DRILLING AND TAPPING A 3/4 "(19 mm) HOLE WITH PIPE THREADS. THE POST CAP SHALL EITHER BE SCREWED TO THE TOP OF THE POST OR A MINIMUM OF 3 TIGHTENING SCREWS SHALL BE REQUIRED ON EACH CAP.

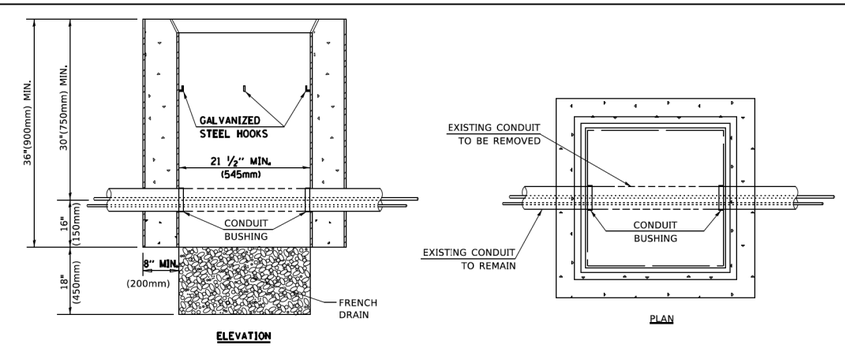

NOTES:

1. HANDHOLE CONSTRUCTED PER STATE STANDARD 814001.
2. REMOVAL OF THE EXISTING CONDUIT FROM THE HANDHOLE AND THE INSTALLATION OF THE CONDUIT BUSHINGS SHALL BE INCLUDED WITH THE COST OF THE HANDHOLE.

HANDHOLE TO INTERCEPT EXISTING CONDUIT

MODEL: Default
FILE NAME: pw:\\IL084EBIDINTEG.illinois.gov:PWIDOT\Documents\IDOT Offices\District 1\Projects\Dist5\d22x34\CADData\CADsheets\ts05.dgn

USER NAME = footemj	DESIGNED -	REVISED -	
	DRAWN -	REVISED -	
PLOT SCALE = 50.0000 ' / in.	CHECKED -	REVISED -	
PLOT DATE = 3/4/2019	DATE -	REVISED -	

STATE OF ILLINOIS
DEPARTMENT OF TRANSPORTATION

DISTRICT ONE
STANDARD TRAFFIC SIGNAL DESIGN DETAILS

SCALE: NONE | SHEET 6 OF 7 SHEETS | STA. N/A TO STA. N/A

F.A.U RTE.	SECTION	COUNTY	TOTAL SHEETS	SHEET NO.
7008	22-00142-02-PV	COOK	245	137
	TS-05	CONTRACT NO. 61L38		
		ILLINOIS FED. AID PROJECT		

ts05.dgn 3/4/2019 11:23:51 AM User=footemj

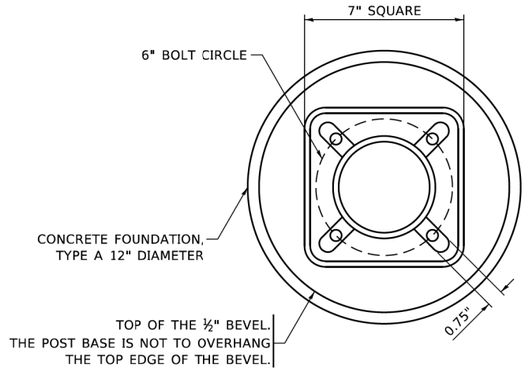

BOLT PATTERN

NOTE:

1. IF THE PEDESTRIAN SIGNAL POST FOUNDATION IS INSTALLED WITHIN OR BEHIND A BARRIER CURB, THE TOP OF THE FOUNDATION SHALL BE INSTALLED FLUSH WITH THE TOP OF THE BARRIER CURB.

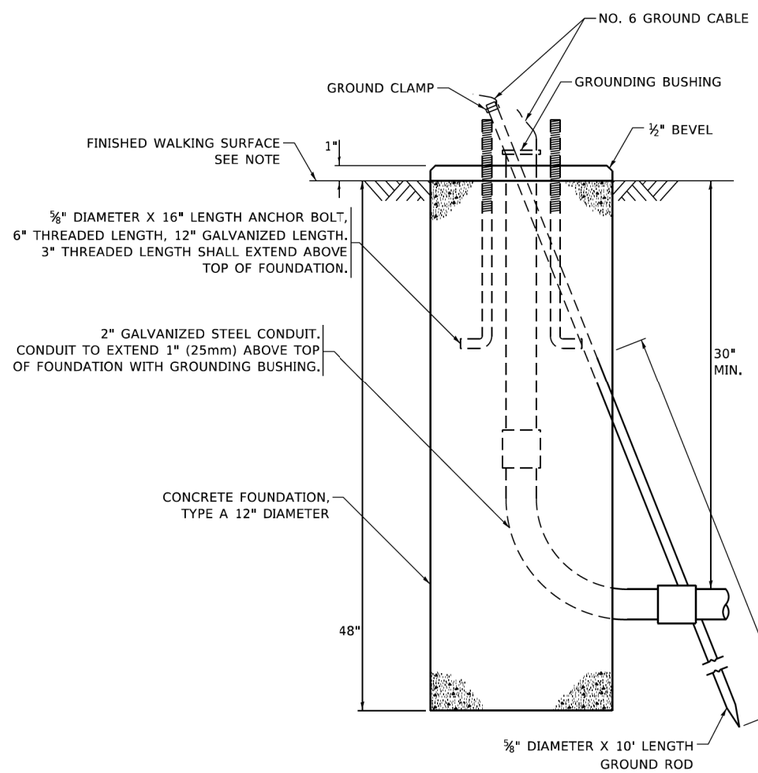

CONCRETE FOUNDATION, TYPE A 12–INCH DIAMETER

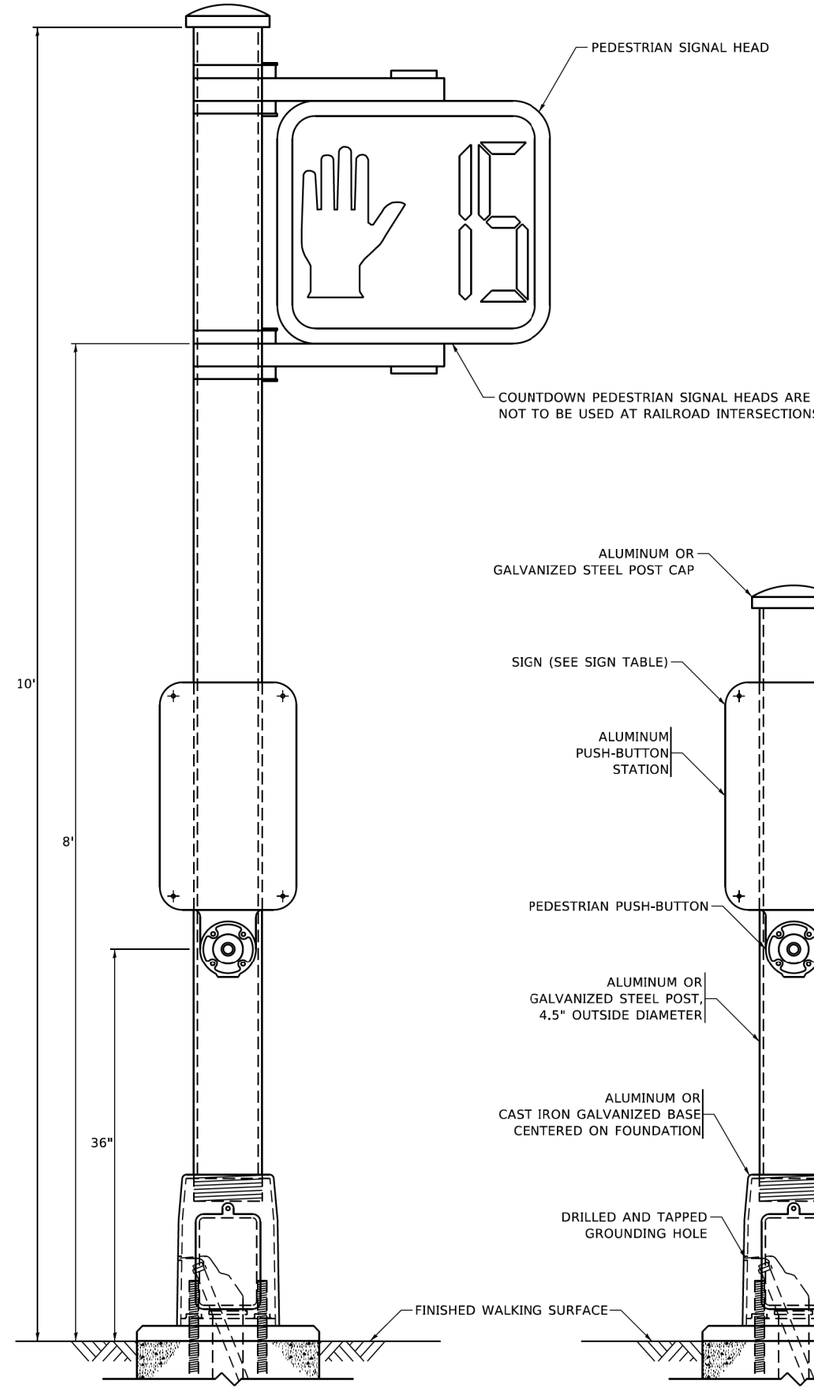

PEDESTRIAN SIGNAL POST, 10 FT.

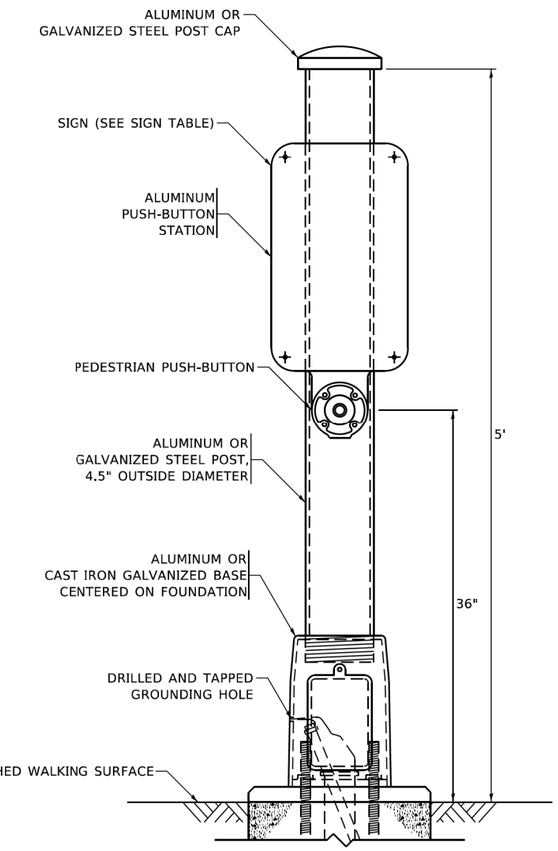

PEDESTRIAN SIGNAL POST, 5 FT.

R10–3b **R10–3d** **R10–3e**

SIGN TABLE

SIGN	DIMENSIONS
R10-3b (RAILROAD ONLY)	9" X 12"
R10-3d (RAILROAD ONLY)	9" X 12"
R10-3e	9" X 12"

NOTES:

1. THE SIGN PANELS SHALL BE TYPE AP SHEETING.
2. THE ARROW ON SIGNS FOR PUSH-BUTTONS SERVING TWO DIRECTIONS ON THE SAME PHASE SHALL BE BI-DIRECTIONAL.
3. THE SIGN FOR DUAL-CALL PUSH-BUTTONS SHALL HAVE NO ARROW.

MODEL: Default
FILE NAME: pw:\\planroom.dot.illinois.gov:PWIDOT\Documents\IDOT Offices\District 1\Projects\Dist5\d22x334\CADData\CADsheets\ts05.dgn

USER NAME = gaglianobt	DESIGNED - IP	REVISED - 10-15-2020	
	DRAWN - IP	REVISED -	
PLOT SCALE = 100.0000 ' / in.	CHECKED - LP	REVISED -	
PLOT DATE = 11/23/2020	DATE - 10-15-2018	REVISED -	

STATE OF ILLINOIS
DEPARTMENT OF TRANSPORTATION

DISTRICT ONE
STANDARD TRAFFIC SIGNAL DESIGN DETAILS

SCALE: NONE | SHEET 7 OF 7 SHEETS | STA. N/A TO STA. N/A

F.A.U RTE.	SECTION	COUNTY	TOTAL SHEETS	SHEET NO.
7008	22-00142-02-PV	COOK	245	138
	TS–05	CONTRACT NO. 61L38		
		ILLINOIS FED. AID PROJECT		

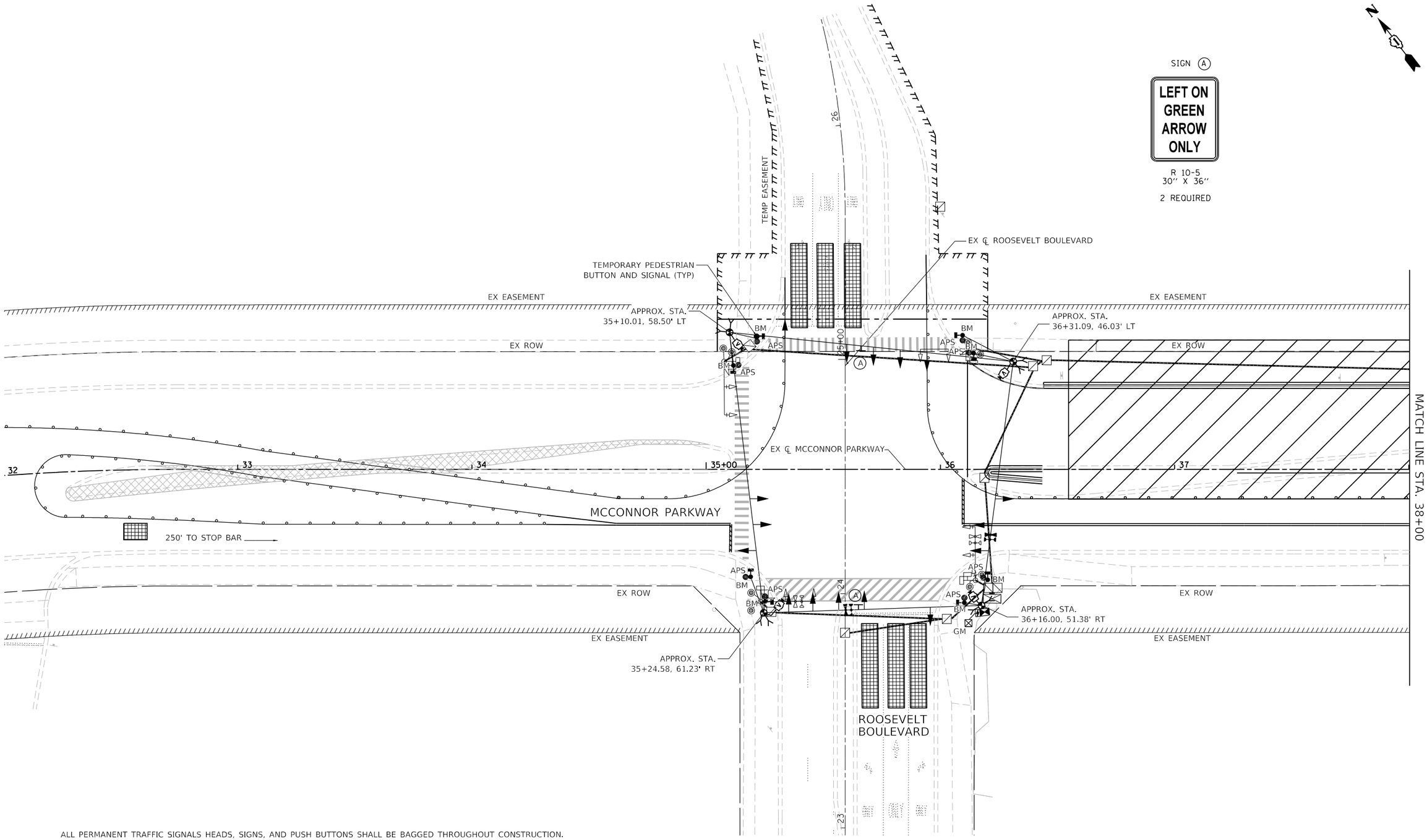

ALL PERMANENT TRAFFIC SIGNALS HEADS, SIGNS, AND PUSH BUTTONS SHALL BE BAGGED THROUGHOUT CONSTRUCTION.
PERMANENT TRAFFIC SIGNAL WILL BE TURNED ON WHEN CONSTRUCTION IS COMPLETE.
TEMPORARY DETECTION CAMERA POSITIONS TO BE DETERMINED BY THE CONTRACTOR/VENDOR TO ENSURE CORRECT ZONE COVERAGE, INCLUDING FAR-OUT DETECTION IS WORKING PROPERLY.
CONTRACTOR TO COORDINATE WITH CONTRACT 61L37

MODEL: Default
FILE NAME: P:\061-078 VoS McConnor Parkway\CADD Sheets\Contract 02 CADD Sheets\15_Traffic Signals\22-00142-02-PV_SHT_TEMP TRAFFIC SIGNALS_STAGE 01_Roosevelt.dgn

BLA, Inc.	USER NAME = jrodriguez	DESIGNED - JR	REVISED -	STATE OF ILLINOIS DEPARTMENT OF TRANSPORTATION	STAGE 1 TEMPORARY TRAFFIC SIGNAL INSTALLATION PLAN MCCONNOR PARKWAY AT ROOSEVELT BOULEVARD	F.A.U. RTE.	SECTION	COUNTY	TOTAL SHEETS	SHEET NO.
		DRAWN - JR	REVISED -			7008	22-00142-02-PV	COOK	245	139
	PLOT SCALE = 40.0079 ' / in.	CHECKED - GJE	REVISED -					CONTRACT NO. 61L38		
	PLOT DATE = 6/4/2025	DATE - 02/18/2025	REVISED -		SCALE: 1"=20' SHEET 1 OF 10 SHEETS STA. 32+00.0 TO STA. 38+00.00		ILLINOIS FED. AID PROJECT			

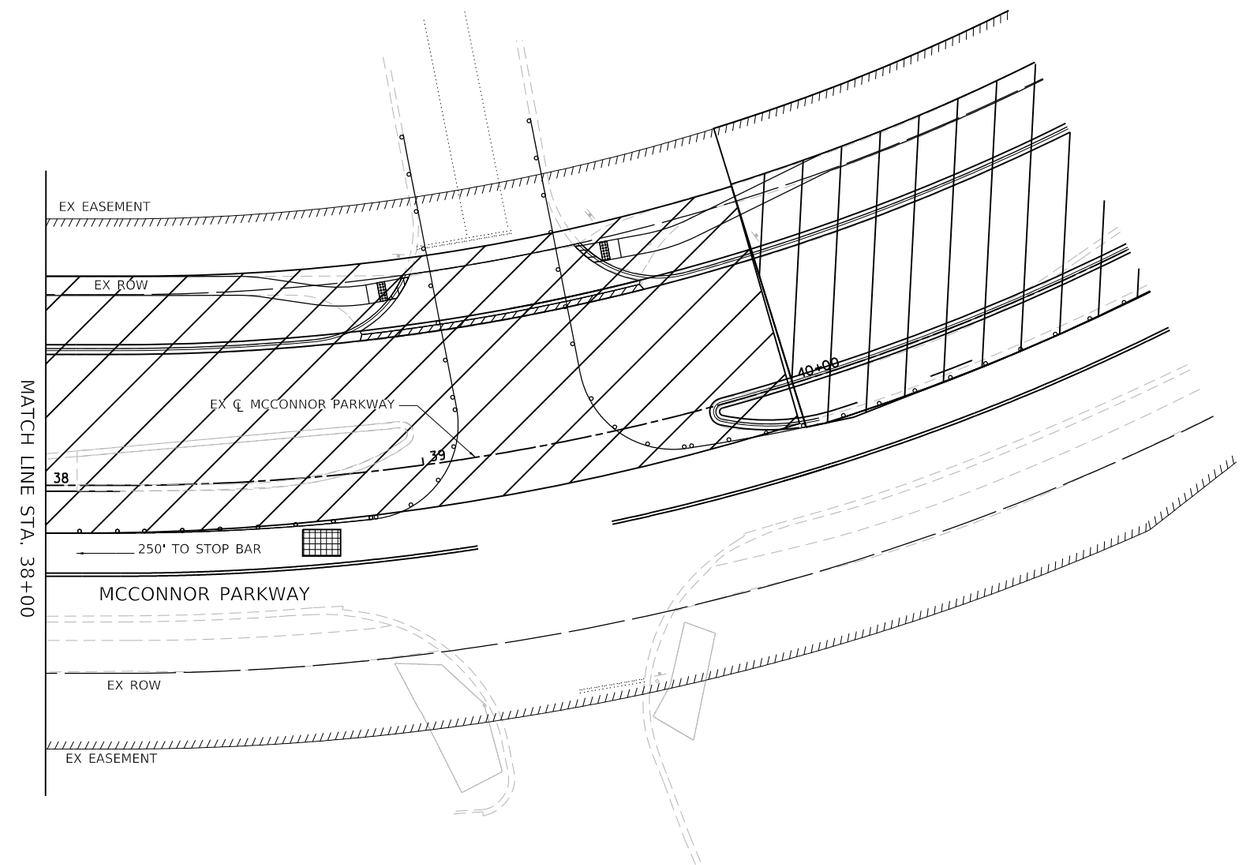

0 20 40 60
SCALE IN FEET

MODEL: Default
FILE NAME: F:\861-078 VOS McConnor Parkway\CADD Sheets\Contract 02 CADD Sheets\15_Traffic Signal\22-00142-02-PV_SHT_TEMP TRAFFIC SIGNALS STAGE 01 Roosevelt.dgn

BLA, Inc.	USER NAME = jrodriguez	DESIGNED - JR	REVISED -	STATE OF ILLINOIS DEPARTMENT OF TRANSPORTATION	STAGE 1 TEMPORARY TRAFFIC SIGNAL INSTALLATION PLAN MCCONNOR PARKWAY AT ROOSEVELT BOULEVARD	F.A.U. RTE.	SECTION	COUNTY	TOTAL SHEETS	SHEET NO.
		DRAWN - JR	REVISED -			7008	22-00142-02-PV	COOK	245	140
	PLOT SCALE = 40.0079 ' / in.	CHECKED - GJE	REVISED -					CONTRACT NO. 61L38		
	PLOT DATE = 6/4/2025	DATE - 02/18/2025	REVISED -		SCALE: 1"=20' SHEET 2 OF 10 SHEETS STA. 32+00.0 TO STA. 38+00.00			ILLINOIS FED. AID PROJECT		

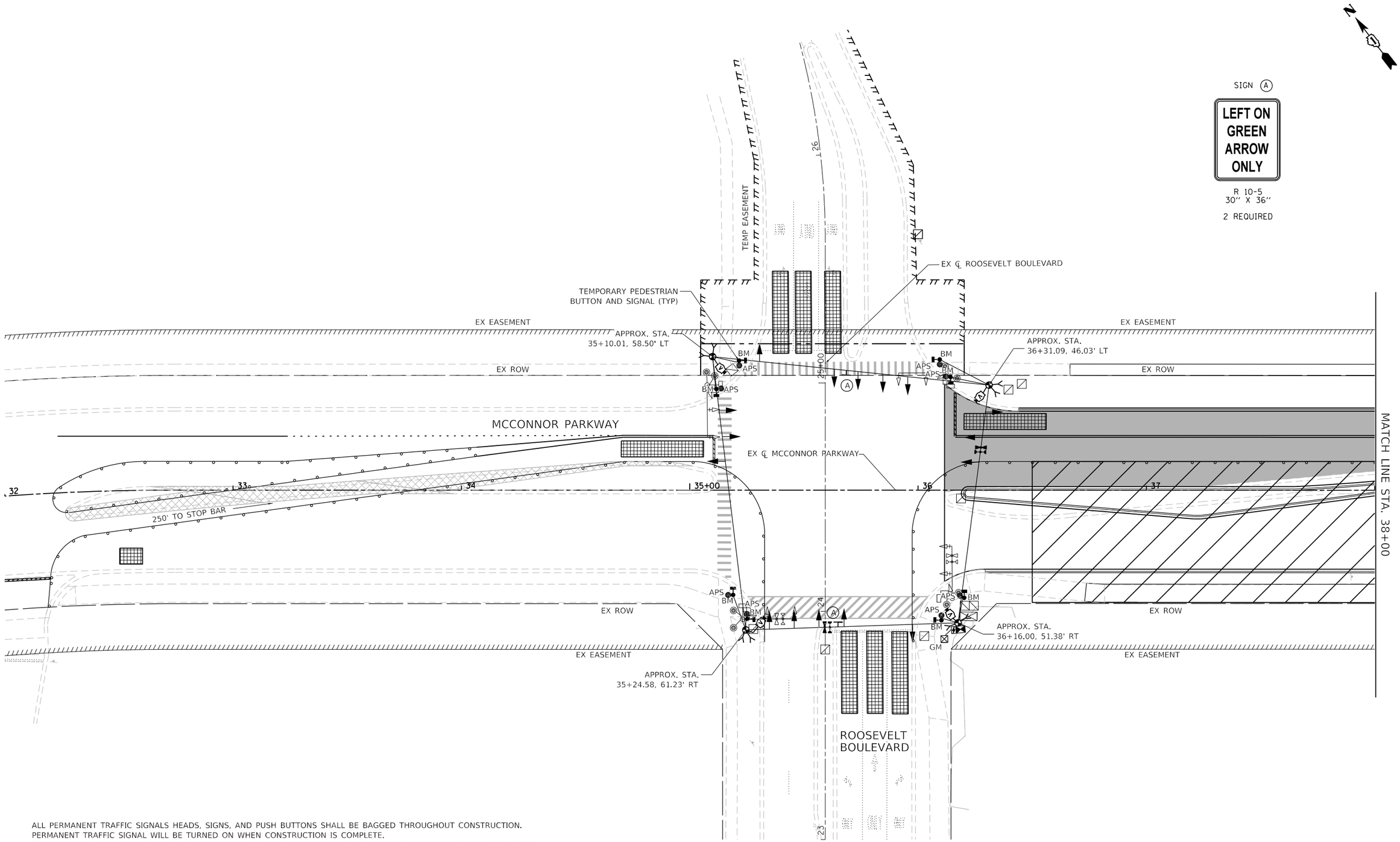

ALL PERMANENT TRAFFIC SIGNALS HEADS, SIGNS, AND PUSH BUTTONS SHALL BE BAGGED THROUGHOUT CONSTRUCTION.
PERMANENT TRAFFIC SIGNAL WILL BE TURNED ON WHEN CONSTRUCTION IS COMPLETE.
TEMPORARY DETECTION CAMERA POSITIONS TO BE DETERMINED BY THE CONTRACTOR/VENDOR TO ENSURE CORRECT ZONE COVERAGE, INCLUDING FAR-OUT DETECTION IS WORKING PROPERLY.

0 20 40 60
SCALE IN FEET

MODEL: Default
FILE NAME: F:\061-078 WOS McConnor Parkway\CADD Sheets\Contract 02 CADD Sheets\15 Traffic Signals\22-00142-02-PV_SHT_TEMP TRAFFIC SIGNALS_STAGE 02_Roosevelt.dgn

BLA, Inc.	USER NAME = jrodriguez	DESIGNED - JR	REVISED -	STATE OF ILLINOIS DEPARTMENT OF TRANSPORTATION	STAGE 2 TEMPORARY TRAFFIC SIGNAL INSTALLATION PLAN MCCONNOR PARKWAY AT ROOSEVELT BOULEVARD
		DRAWN - JR	REVISED -		
	PLOT SCALE = 40.0000 ' / in.	CHECKED - GJE	REVISED -		
	PLOT DATE = 6/4/2025	DATE - 02/18/2025	REVISED -		SCALE: 1"=20' SHEET 3 OF 10 SHEETS STA. 32+00.0 TO STA. 38+00.00

F.A.U. RTE.	SECTION	COUNTY	TOTAL SHEETS	SHEET NO.
7008	22-00142-02-PV	COOK	245	141
		CONTRACT NO. 61L38		
		ILLINOIS FED. AID PROJECT		

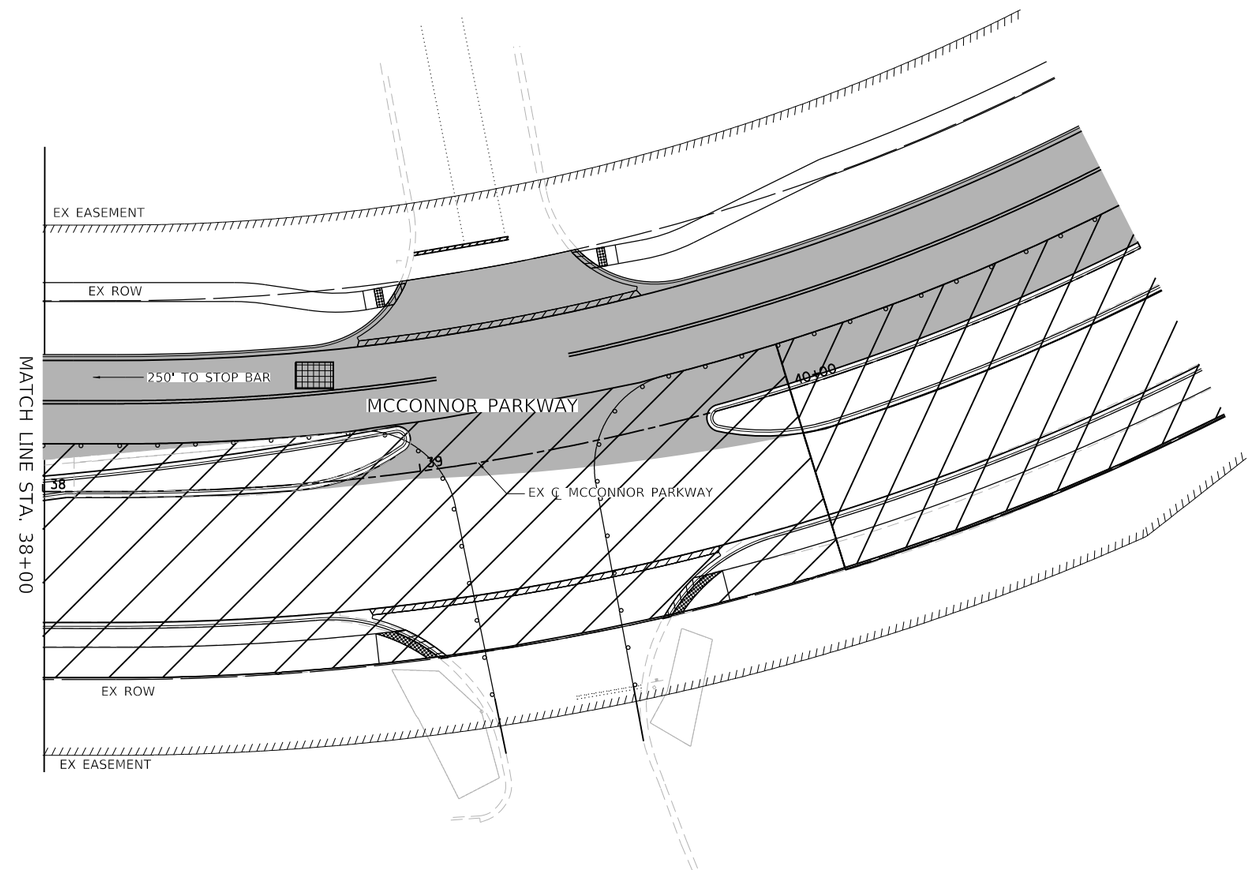

0 20 40 60
SCALE IN FEET

MODEL: Default
FILE NAME: F:\061-078 WG McConnor Parkway\CADD Sheets\Contract 02 CADD Sheets\15 Traffic Signals\22-00142-02-PV SHT_TEMP TRAFFIC SIGNALS_STAGE 02_Roosevelt.dgn

BLA, Inc.	USER NAME = jrodriguez	DESIGNED - JR	REVISED -	STATE OF ILLINOIS DEPARTMENT OF TRANSPORTATION	STAGE 2 TEMPORARY TRAFFIC SIGNAL INSTALLATION PLAN MCCONNOR PARKWAY AT ROOSEVELT BOULEVARD	F.A.U. RTE.	SECTION	COUNTY	TOTAL SHEETS / SHEET NO.
		DRAWN - JR	REVISED -			7008	22-00142-02-PV	COOK	245 / 142
	PLOT SCALE = 40.0000 ' / in.	CHECKED - GJE	REVISED -					CONTRACT NO. 61L38	
	PLOT DATE = 6/4/2025	DATE - 02/18/2025	REVISED -		SCALE: 1"=20' SHEET 4 OF 10 SHEETS STA. 32+00.0 TO STA. 38+00.00		ILLINOIS FED. AID PROJECT		

TEMPORARY CONTROLLER SEQUENCE

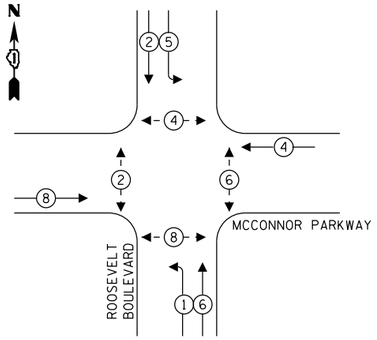

LEGEND:

- PROTECTED PHASE
- PROTECTED/PERMITTED PHASE
- PEDESTRIAN PHASE
- OL OVERLAP

TEMPORARY EMERGENCY VEHICLE PREEMPTION SEQUENCE

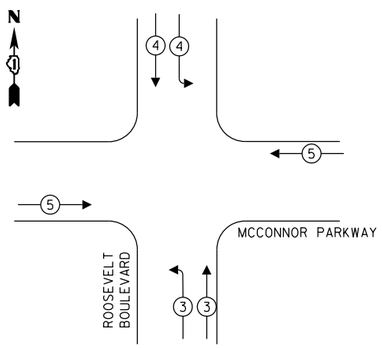

TRAFFIC SIGNAL ELECTRICAL SERVICE REQUIREMENTS

EQUIPMENT TYPE	QUANTITY	UNIT WATTAGE	TOTAL WATTAGE
SIGNAL HEAD 1 OR 3-SECTION	16	11	176
4-SECTION	-	14	-
5-SECTION	-	13	-
PROGRAMMABLE 3-SECTION	-	22	-
4-SECTION	-	32	-
5-SECTION	-	28	-
PEDESTRIAN SIGNAL	8	15	120
CONTROLLER	1	150	150
MASTER CONTROLLER	-	100	-
UPS	1	25	25
DETECTION RADAR OR VIDEO	4	20	80
BLANK-OUT SIGN	-	25	-
NETWORK SWITCH II OR III	1	35	35
CELLULAR MODEM	1	15	15
TOTAL UPS SIZING			601
UPS CHARGING	1	225	225
BATTERY HEATER MAT	1	180	180
CABINET HEATER	1	200	200
FLASHER	-	15	-
LED STREET NAME SIGN	-	120	-
LUMINAIRE	-	240	-
TOTAL SERVICE WIRE SIZING			1,206

ENERGY COSTS TO:
ILLINOIS DEPARTMENT OF TRANSPORTATION
01 WEST CENTER COURT
SCHAUMBURG, IL 60196-1096

ENERGY SUPPLY: CONTACT: DAVE SCHACHT
PHONE: (630) 437-2129
COMPANY: COMED
ACCOUNT NUMBER: ---
METER NUMBER: ---

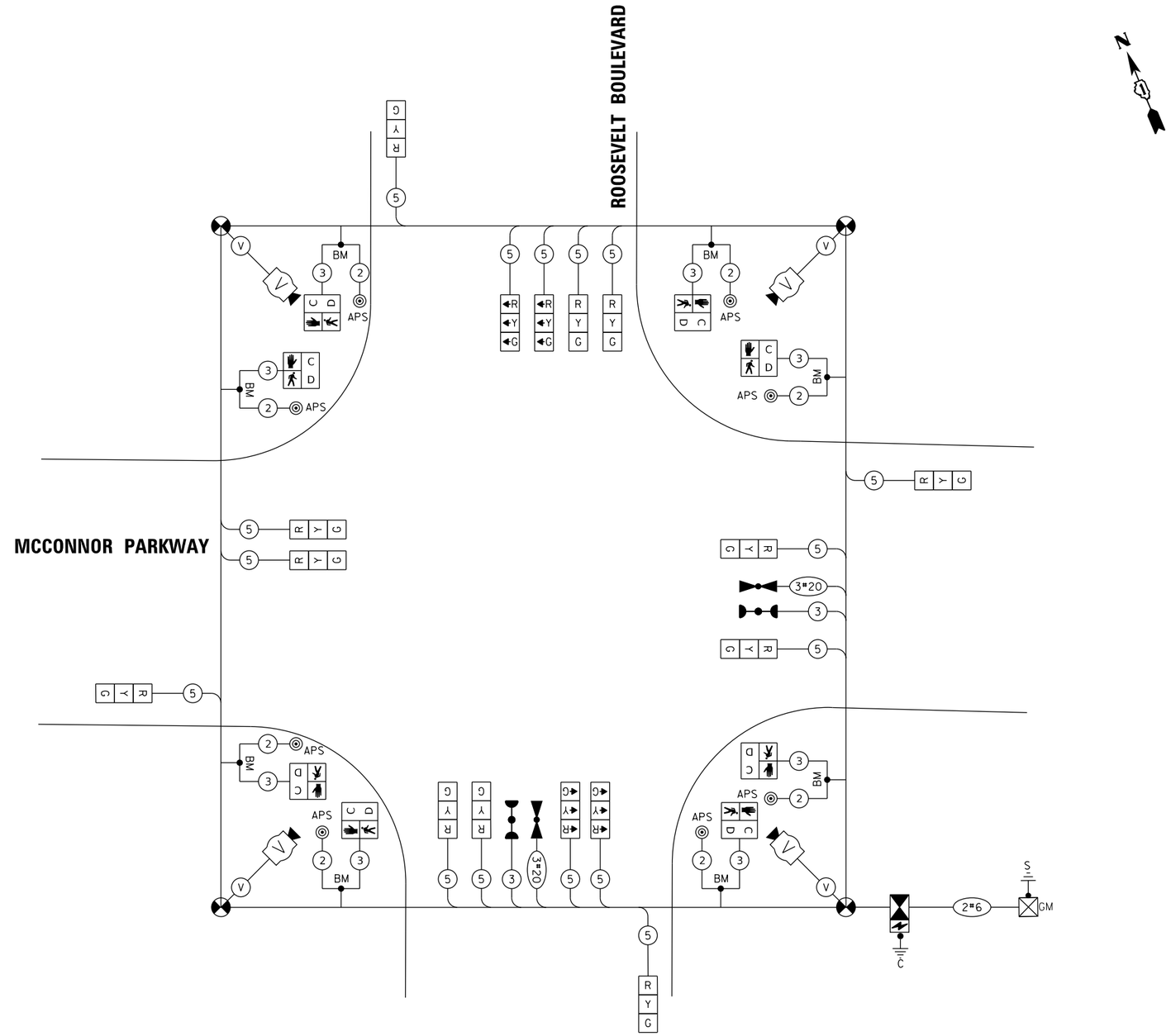

CABLE PLAN

(NOT TO SCALE)

MODEL: Default
FILE NAME: F:\061-078 VOS McConnor Parkway\CADD Sheets\Contract 02 CADD Sheets\15_Traffic Signal\22-00142-02-PV_SHT_TEMP TRAFFIC SIGNALS_STAGE 01_Roosevelt.dgn

BLA, Inc.

USER NAME = jrodriguez	DESIGNED - JR	REVISED -
	DRAWN - JR	REVISED -
PLOT SCALE = 40.0079 ' / in.	CHECKED - GJE	REVISED -
PLOT DATE = 6/4/2025	DATE - 02/18/2025	REVISED -

STATE OF ILLINOIS
DEPARTMENT OF TRANSPORTATION

STAGES 1 & 2 – TEMPORARY TRAFFIC CABLE PLAN, TEMPORARY PHASE DESIGNATION DIAGRAM, AND TEMPORARY EMERGENCY VEHICLE PREEMPTION SEQUENCE
MCCONNOR PARKWAY AT ROOSEVELT BOULEVARD

SCALE: NTS | SHEET 5 OF 10 SHEETS | STA. N/A TO STA. N/A

F.A.U. RTE.	SECTION	COUNTY	TOTAL SHEETS	SHEET NO.
7008	22-00142-02-PV	COOK	245	143

CONTRACT NO. 61L38

ILLINOIS FED. AID PROJECT

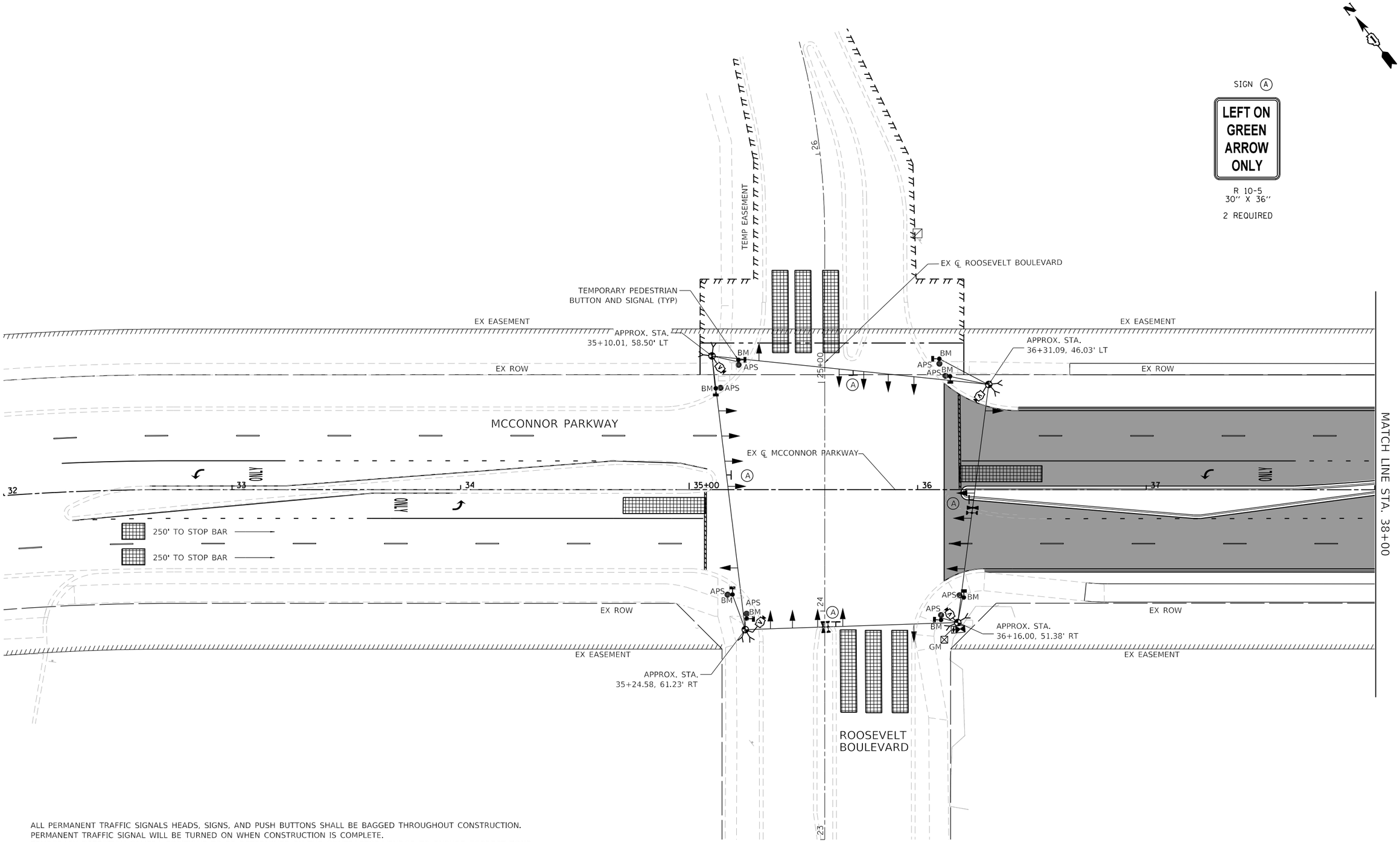

ALL PERMANENT TRAFFIC SIGNALS HEADS, SIGNS, AND PUSH BUTTONS SHALL BE BAGGED THROUGHOUT CONSTRUCTION.
PERMANENT TRAFFIC SIGNAL WILL BE TURNED ON WHEN CONSTRUCTION IS COMPLETE.
TEMPORARY DETECTION CAMERA POSITIONS TO BE DETERMINED BY THE CONTRACTOR/VENDOR TO ENSURE CORRECT ZONE COVERAGE, INCLUDING FAR-OUT DETECTION IS WORKING PROPERLY.

MODEL: Default
FILE NAME: F:\061-078 VOS McConnor Parkway\CADD Sheets\Contract 02 CADD Sheets\15_Traffic Signal\22-00142-02-PV_SHT_TEMP TRAFFIC SIGNALS_STAGE 02W_Roosevelt.dgn

BLA, Inc.	USER NAME = jrodriguez	DESIGNED - JR	REVISED -
		DRAWN - JR	REVISED -
	PLOT SCALE = 40.0000 ' / in.	CHECKED - GJE	REVISED -
	PLOT DATE = 6/4/2025	DATE - 02/18/2025	REVISED -

STATE OF ILLINOIS
DEPARTMENT OF TRANSPORTATION

WINTER STAGE TEMPORARY TRAFFIC SIGNAL INSTALLATION PLAN
MCCONNOR PARKWAY AT ROOSEVELT BOULEVARD

SCALE: 1"=20' | SHEET 6 OF 10 SHEETS | STA. 32+00.0 TO STA. 38+00.00

F.A.U. RTE.	SECTION	COUNTY	TOTAL SHEETS	SHEET NO.
7008	22-00142-02-PV	COOK	245	144

CONTRACT NO. 61L38

ILLINOIS FED. AID PROJECT

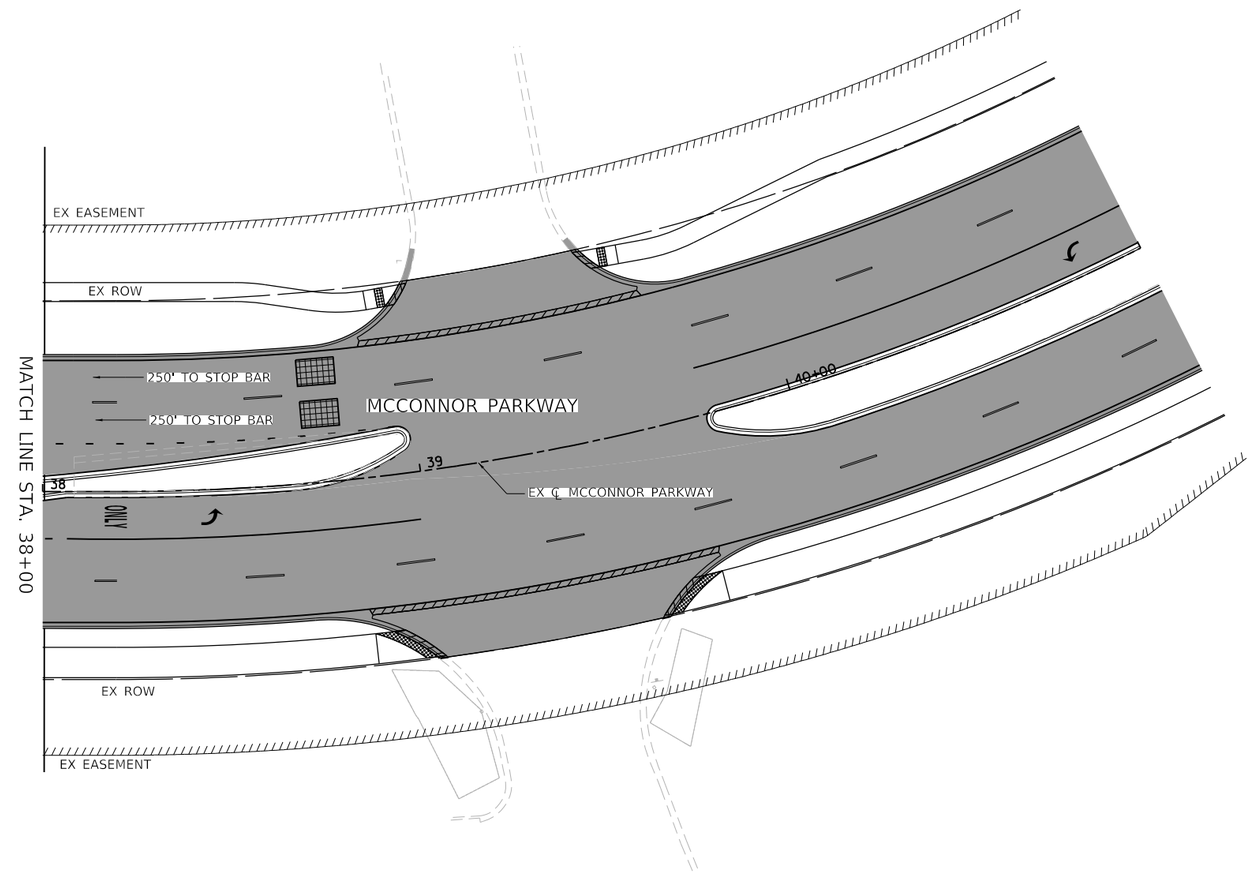

0 20 40 60
SCALE IN FEET

MODEL: Default
FILE NAME: F:\861-078 VGS McConnor Parkway\CADD Sheets\Contract 02 CADD Sheets\15 Traffic Signals\22-00142-02-PV_SHT_TEMP TRAFFIC SIGNALS_STAGE 02W Roosevelt.dgn

BLA, Inc.	USER NAME = jrodriguez	DESIGNED - JR	REVISED -	STATE OF ILLINOIS DEPARTMENT OF TRANSPORTATION	WINTER STAGE TEMPORARY TRAFFIC SIGNAL INSTALLATION PLAN MCCONNOR PARKWAY AT ROOSEVELT BOULEVARD	F.A.U. RTE.	SECTION	COUNTY	TOTAL SHEETS / SHEET NO.
		DRAWN - JR	REVISED -			7008	22-00142-02-PV	COOK	245 / 145
	PLOT SCALE = 40.0000 ' / in.	CHECKED - GJE	REVISED -					CONTRACT NO. 61L38	
	PLOT DATE = 6/4/2025	DATE - 02/18/2025	REVISED -		SCALE: 1"=20' SHEET 7 OF 10 SHEETS STA. 32+00.0 TO STA. 38+00.00		ILLINOIS FED. AID PROJECT		

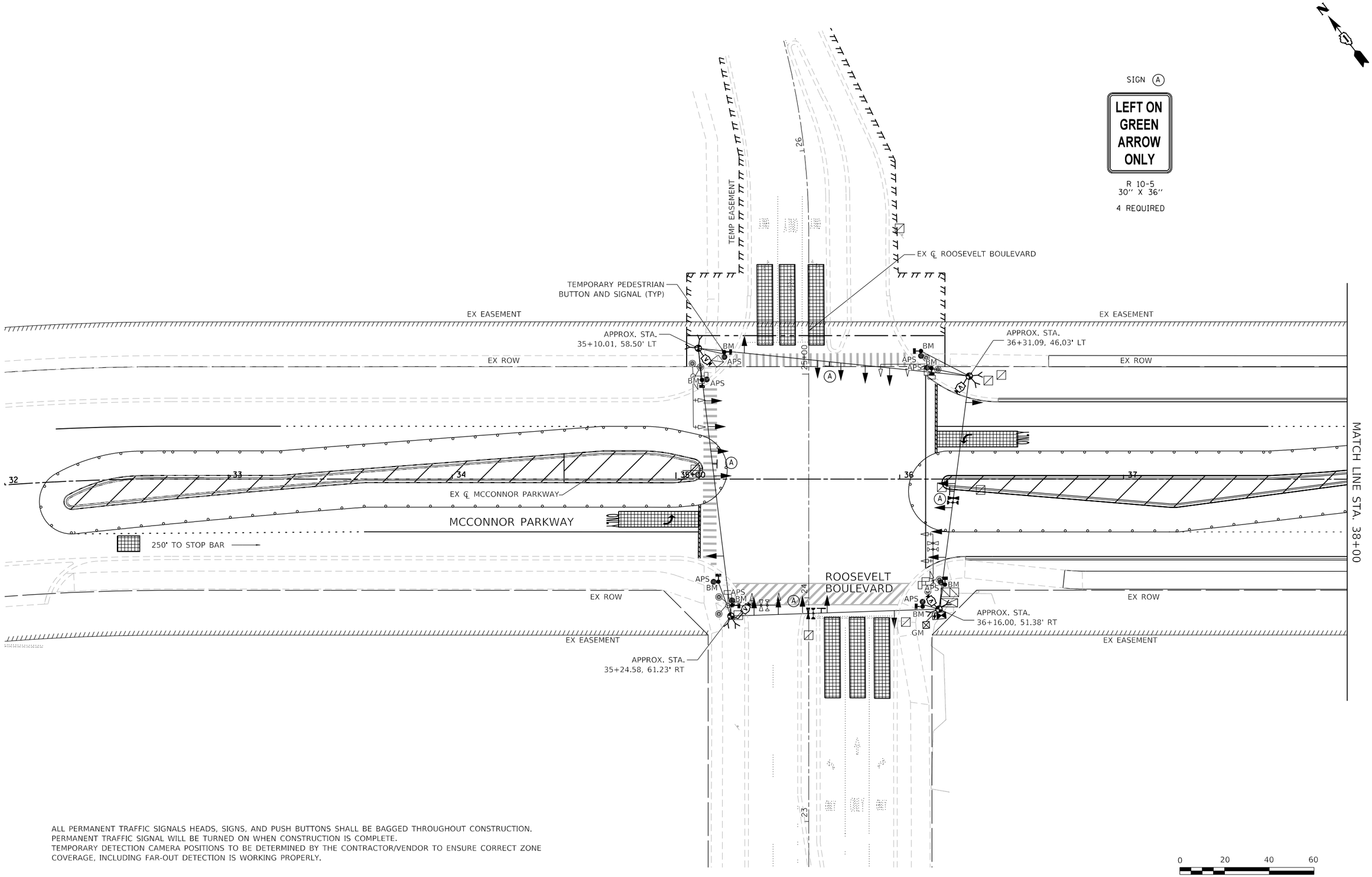

ALL PERMANENT TRAFFIC SIGNALS HEADS, SIGNS, AND PUSH BUTTONS SHALL BE BAGGED THROUGHOUT CONSTRUCTION.
PERMANENT TRAFFIC SIGNAL WILL BE TURNED ON WHEN CONSTRUCTION IS COMPLETE.
TEMPORARY DETECTION CAMERA POSITIONS TO BE DETERMINED BY THE CONTRACTOR/VENDOR TO ENSURE CORRECT ZONE COVERAGE, INCLUDING FAR-OUT DETECTION IS WORKING PROPERLY.

MODEL: Default
FILE NAME: F:\061-078 vos McConnor Parkway\CADD Sheets\Contract 02 CADD Sheets\15 Traffic Signals\22-00142-02-PV SHT TEMP TRAFFIC SIGNALS STAGE 03 Roosevelt.dgn

BLA, Inc.	USER NAME = jrodriguez	DESIGNED - JR	REVISED -	STATE OF ILLINOIS DEPARTMENT OF TRANSPORTATION	STAGE 3 TEMPORARY TRAFFIC SIGNAL INSTALLATION PLAN MCCONNOR PARKWAY AT ROOSEVELT BOULEVARD
		DRAWN - JR	REVISED -		
	PLOT SCALE = 40.0000 ' / in.	CHECKED - GJE	REVISED -		
	PLOT DATE = 6/4/2025	DATE - 02/18/2025	REVISED -		SCALE: 1"=20' SHEET 8 OF 10 SHEETS STA. 32+00.0 TO STA. 38+00.00

F.A.U. RTE.	SECTION	COUNTY	TOTAL SHEETS	SHEET NO.
7008	22-00142-02-PV	COOK	245	146
		CONTRACT NO. 61L38		
		ILLINOIS FED. AID PROJECT		

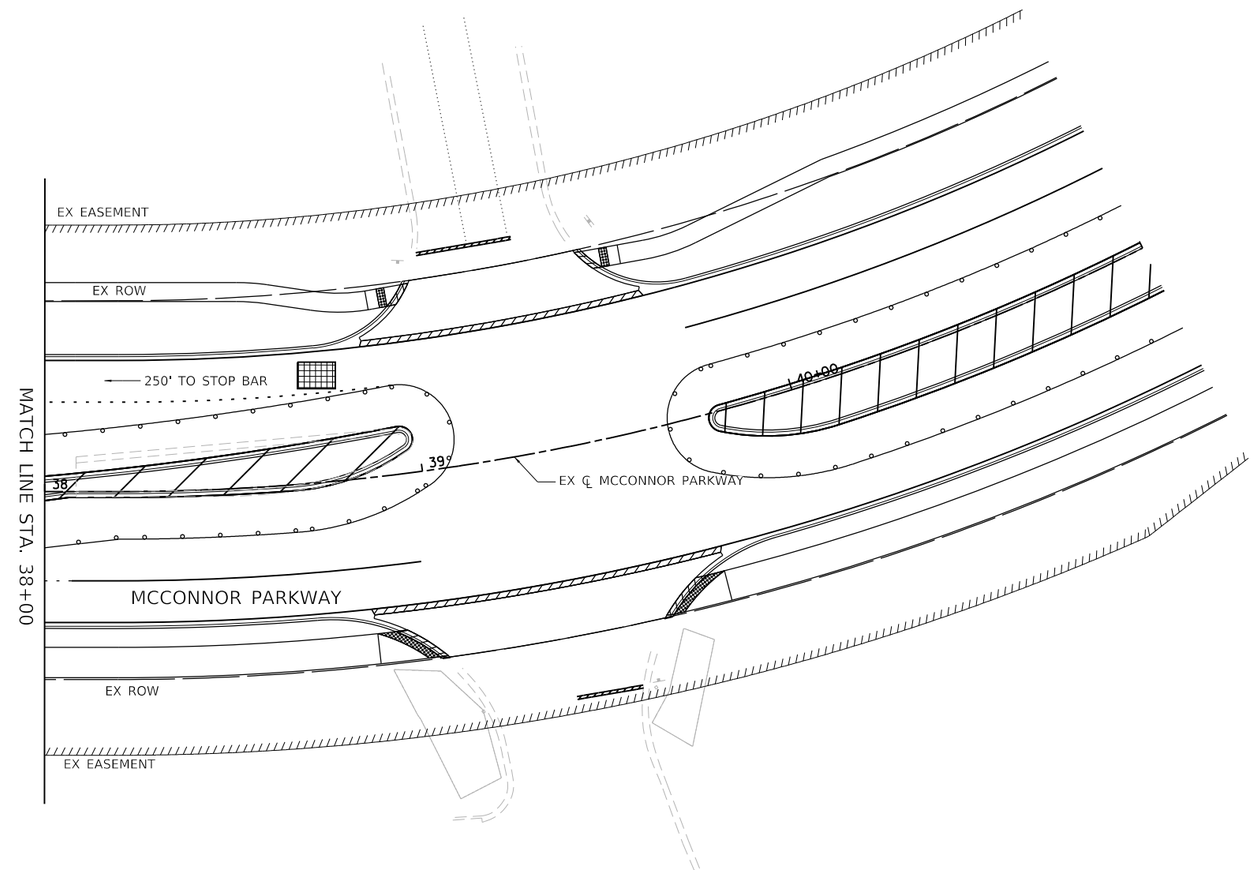

0 20 40 60
SCALE IN FEET

MODEL: Default
FILE NAME: F:\061-078 WS McConnor Parkway\CADD Sheets\Contract 02 CADD Sheets\15 Traffic Signal\22-00142-02-PV SHT TEMP TRAFFIC SIGNALS STAGE 03 Roosevelt.dgn

BLA, Inc.	USER NAME = jrodriguez	DESIGNED - JR	REVISED -
		DRAWN - JR	REVISED -
	PLOT SCALE = 40.0000 ' / in.	CHECKED - GJE	REVISED -
	PLOT DATE = 6/4/2025	DATE - 02/18/2025	REVISED -

STATE OF ILLINOIS
DEPARTMENT OF TRANSPORTATION

STAGE 3 TEMPORARY TRAFFIC SIGNAL INSTALLATION PLAN
MCCONNOR PARKWAY AT ROOSEVELT BOULEVARD

SCALE: 1"=20' | SHEET 9 OF 10 SHEETS | STA. 32+00.0 TO STA. 38+00.00

F.A.U. RTE.	SECTION	COUNTY	TOTAL SHEETS	SHEET NO.
7008	22-00142-02-PV	COOK	245	147
		CONTRACT NO. 61L38		
		ILLINOIS FED. AID PROJECT		

TEMPORARY CONTROLLER SEQUENCE

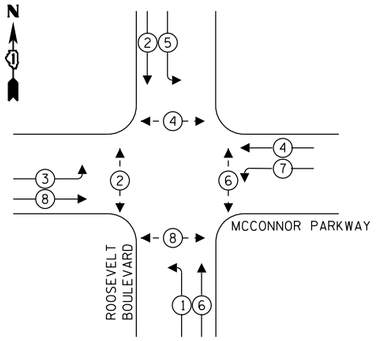

LEGEND:

- PROTECTED PHASE
- PROTECTED/PERMITTED PHASE
- PEDESTRIAN PHASE
- OL OVERLAP

TEMPORARY EMERGENCY VEHICLE PREEMPTION SEQUENCE

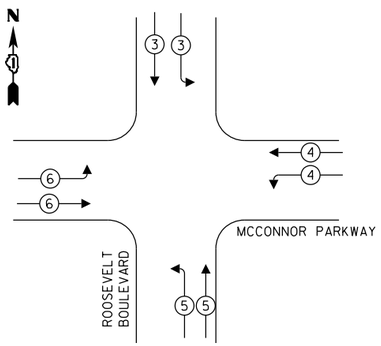

TRAFFIC SIGNAL ELECTRICAL SERVICE REQUIREMENTS

EQUIPMENT TYPE	QUANTITY	UNIT WATTAGE	TOTAL WATTAGE
SIGNAL HEAD 1 OR 3-SECTION	20	11	220
4-SECTION	-	14	-
5-SECTION	-	13	-
PROGRAMMABLE 3-SECTION	-	22	-
4-SECTION	-	32	-
5-SECTION	-	28	-
PEDESTRIAN SIGNAL	8	15	120
CONTROLLER	1	150	150
MASTER CONTROLLER	-	100	-
UPS	1	25	25
DETECTION RADAR OR VIDEO	4	20	80
BLANK-OUT SIGN	-	25	-
NETWORK SWITCH II OR III	1	35	35
CELLULAR MODEM	1	15	15
TOTAL UPS SIZING			645
UPS CHARGING	1	225	225
BATTERY HEATER MAT	1	180	180
CABINET HEATER	1	200	200
FLASHER	-	15	-
LED STREET NAME SIGN	-	120	-
LUMINAIRE	-	240	-
TOTAL SERVICE WIRE SIZING			1,250

ENERGY COSTS TO:
ILLINOIS DEPARTMENT OF TRANSPORTATION
01 WEST CENTER COURT
SCHAUMBURG, IL 60196-1096

ENERGY SUPPLY: CONTACT: DAVE SCHACHT
PHONE: (630) 437-2129
COMPANY: COMED
ACCOUNT NUMBER: ---
METER NUMBER: ---

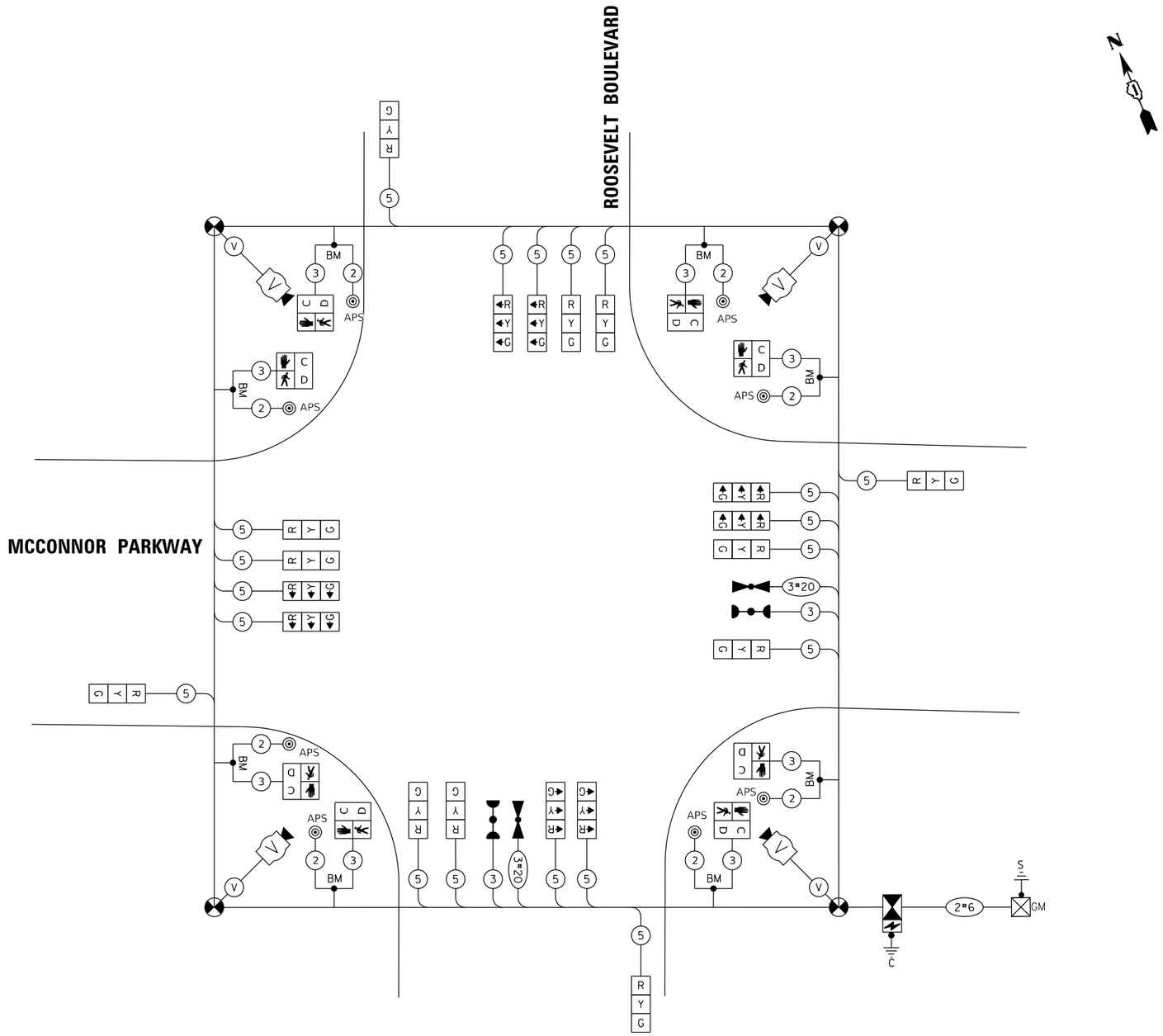

CABLE PLAN

(NOT TO SCALE)

MODEL: Default
FILE NAME: F:\861-078 VOS McConnor Parkway\CADD Sheets\Contract 02 CADD Sheets\15 Traffic Signal\22-00142-02-PV_SHT TEMP TRAFFIC SIGNALS STAGE 03 Roosevelt.dgn

BLA, Inc.

USER NAME = jrodriguez	DESIGNED - JR	REVISED -
	DRAWN - JR	REVISED -
PLOT SCALE = 40.0000 ' / in.	CHECKED - GJE	REVISED -
PLOT DATE = 6/4/2025	DATE - 02/18/2025	REVISED -

STATE OF ILLINOIS
DEPARTMENT OF TRANSPORTATION

WINTER & STAGE 3 – TEMPORARY TRAFFIC CABLE PLAN, TEMPORARY PHASE DESIGNATION DIAGRAM, AND TEMPORARY EMERGENCY VEHICLE PREEMPTION SEQUENCE
MCCONNOR PARKWAY AT ROOSEVELT BOULEVARD

SCALE: NTS | SHEET 10 OF 10 SHEETS | STA. N/A | TO STA. N/A

F.A.U. RTE.	SECTION	COUNTY	TOTAL SHEETS	SHEET NO.
7008	22-00142-02-PV	COOK	245	148

CONTRACT NO. 61L38
ILLINOIS FED. AID PROJECT

REMOVAL AND RELOCATION NOTES:

THE FOLLOWING ITEMS SHALL BE REMOVED BY THE CONTRACTOR AND SHALL BE BE DISPOSED OF BY THEM OUTSIDE THE RIGHT-OF-WAY AT THEIR EXPENSE. THE SALVAGE VALUE OF THE REMOVED EQUIPMENT SHALL BE REFLECTED IN THE CONTRACT BID PRICE.

- 1 EACH STEEL MAST ARM ASSEMBLY AND POLE
- 5 EACH TRAFFIC SIGNAL POST
- 8 EACH 3-SECTION SIGNAL HEADS
- 2 EACH 4-SECTION SIGNAL HEADS
- 1 EACH 5-SECTION SIGNAL HEADS
- 3 EACH TRAFFIC SIGNAL BACK PLATES
- 3 EACH PEDESTRIAN SIGNAL HEAD
- 4 EACH PEDESTRIAN PUSHBUTTONS

THE FOLLOWING EXISTING TRAFFIC SIGNAL EQUIPMENT SHALL BE REMOVED BY THE CONTRACTOR, SAFELY STORED AND RELOCATED ON THE EXISTING MAST ARM:

- 2 EACH 3-SECTION SIGNAL HEADS
- 2 EACH TRAFFIC SIGNAL BACKPLATES

THE FOLLOWING EXISTING TRAFFIC SIGNAL EQUIPMENT SHALL BE RELOCATED BY THE CONTRACTOR AND SHALL REMAIN THE PROPERTY OF THE AGENCY LISTED BELOW.

THE VILLAGE OF SCHAUMBURG FIRE DEPARTMENT.

- 2 EACH CONFIRMATION BEACON
- 2 EACH LIGHT DETECTOR

EXISTING SIGNAL HEADS TO REMAIN SHALL BE BAGGED FOR THE DURATION OF CONSTRUCTION

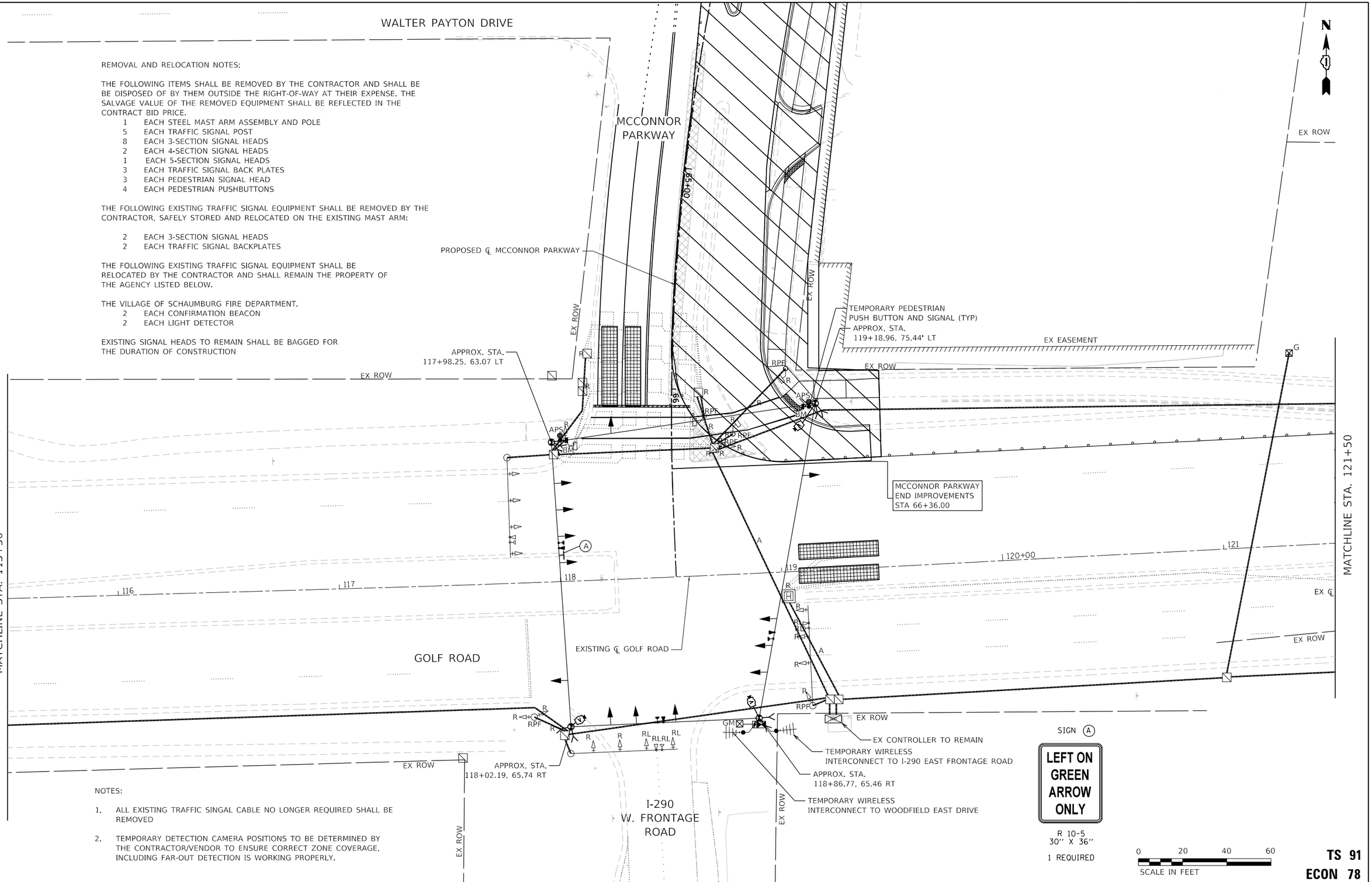

NOTES:

1. ALL EXISTING TRAFFIC SINGAL CABLE NO LONGER REQUIRED SHALL BE REMOVED
2. TEMPORARY DETECTION CAMERA POSITIONS TO BE DETERMINED BY THE CONTRACTOR/VENDOR TO ENSURE CORRECT ZONE COVERAGE, INCLUDING FAR-OUT DETECTION IS WORKING PROPERLY.

TS 91
ECON 78

MODEL: Default
FILE NAME: F:\061-078 VOS McConnor Parkway\CADD Sheets\Contract 02 CADD Sheets\15_Traffic Signals\22-00142-02-PV_SHT_TEMP TRAFFIC SIGNALS_STAGE 01.dgn

BLA, Inc.	USER NAME = jrodriguez	DESIGNED - JR	REVISED -
		DRAWN - JR	REVISED -
	PLOT SCALE = 40.0000 ' / in.	CHECKED - GJE	REVISED -
	PLOT DATE = 6/4/2025	DATE - 02/18/2025	REVISED -

STATE OF ILLINOIS
DEPARTMENT OF TRANSPORTATION

STAGE 1 TEMPORARY TRAFFIC SIGNAL INSTALLATION PLAN AND EXISTING TRAFFIC SIGNAL EQUIPMENT REMOVAL PLAN
MCCONNOR PARKWAY AT GOLF ROAD

SCALE: 1"=20' | SHEET 1 OF 12 SHEETS | STA. 39+00 TO STA. 44+50

F.A.U. RTE.	SECTION	COUNTY	TOTAL SHEETS	SHEET NO.
7008	22-00142-02-PV	COOK	245	149
		CONTRACT NO. 61L38		
		ILLINOIS FED. AID PROJECT		

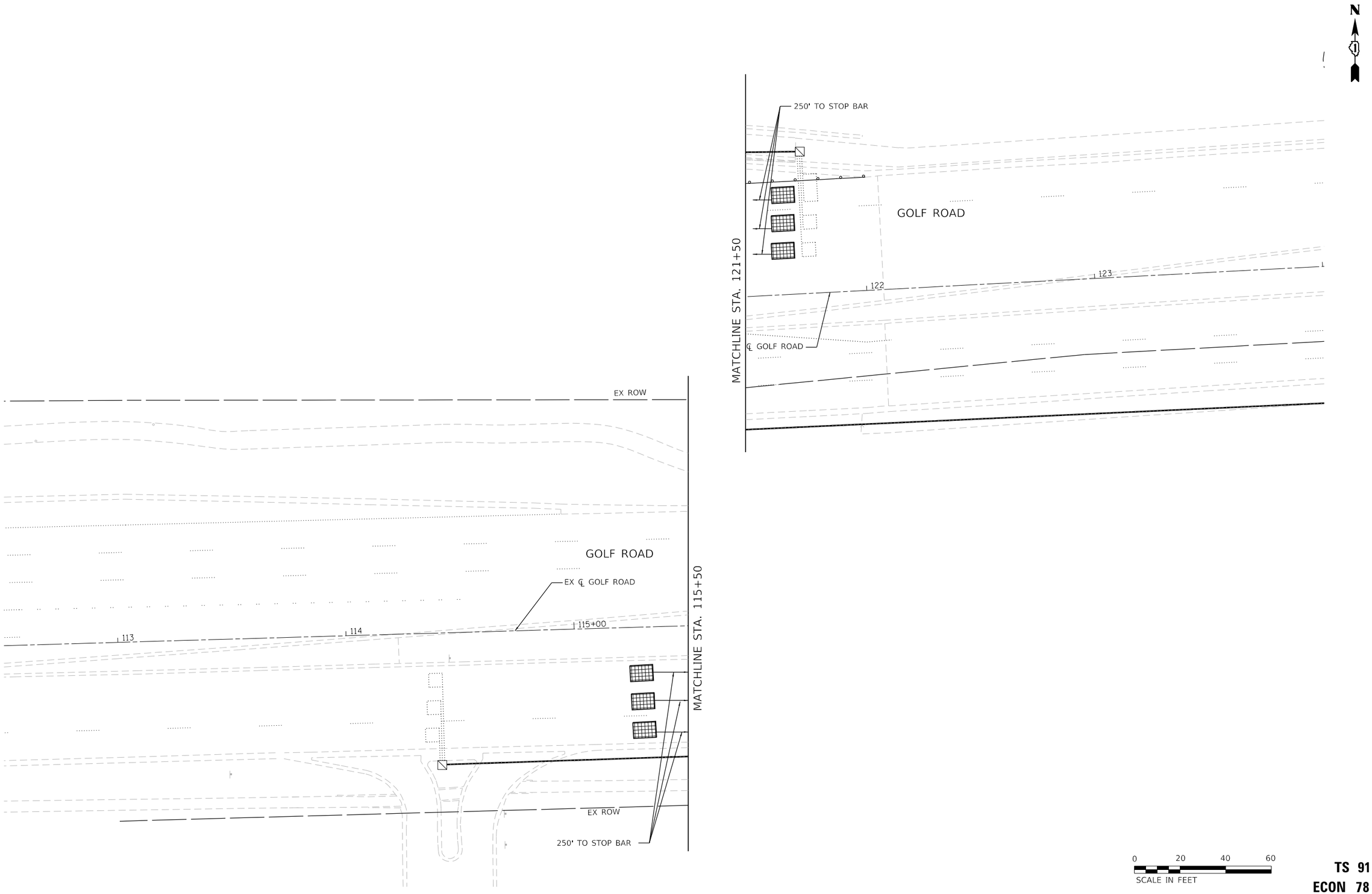

TS 91

ECON 78

MODEL: Default
FILE NAME: F:\861-078 VOS McConnor Parkway\CADD Sheets\Contract 02 CADD Sheets\15_Traffic Signal\22-00142-02-PV_SHT_TEMP TRAFFIC SIGNALS_STAGE 01.dgn

BLA, Inc.	USER NAME = jrodriguez	DESIGNED - JR	REVISED -
		DRAWN - JR	REVISED -
	PLOT SCALE = 40.0000 ' / in.	CHECKED - GJE	REVISED -
	PLOT DATE = 6/4/2025	DATE - 02/18/2025	REVISED -

STATE OF ILLINOIS
DEPARTMENT OF TRANSPORTATION

STAGE 1 TEMPORARY TRAFFIC SIGNAL INSTALLATION PLAN AND EXISTING TRAFFIC SIGNAL EQUIPMENT REMOVAL PLAN
MCCONNOR PARKWAY AT GOLF ROAD

SCALE: 1"=20' | SHEET 2 OF 12 SHEETS | STA. 112+50 TO STA. 124+00

F.A.U. RTE.	SECTION	COUNTY	TOTAL SHEETS	SHEET NO.
7008	22-00142-02-PV	COOK	245	150

CONTRACT NO. 61L38

ILLINOIS FED. AID PROJECT

TEMPORARY CONTROLLER SEQUENCE

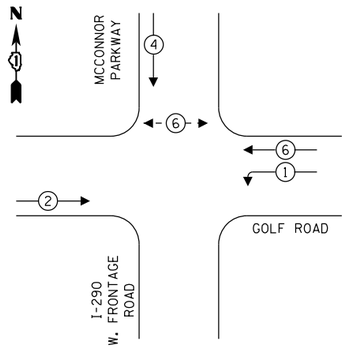

LEGEND:

- PROTECTED PHASE
- PROTECTED/PERMITTED PHASE
- PEDESTRIAN PHASE
- OL OVERLAP

TEMPORARY EMERGENCY VEHICLE PREEMPTION SEQUENCE

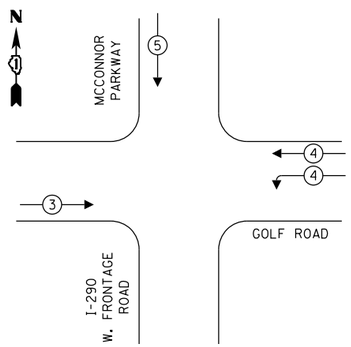

TRAFFIC SIGNAL ELECTRICAL SERVICE REQUIREMENTS

EQUIPMENT TYPE	QUANTITY	UNIT WATTAGE	TOTAL WATTAGE
SIGNAL HEAD 1 OR 3-SECTION	13	11	143
4-SECTION	-	14	-
5-SECTION	-	13	-
PROGRAMMABLE 3-SECTION	-	22	-
4-SECTION	-	32	-
5-SECTION	-	28	-
PEDESTRIAN SIGNAL	2	15	30
CONTROLLER	1	150	150
MASTER CONTROLLER	-	100	-
UPS	1	25	25
DETECTION RADAR OR VIDEO	3	20	60
BLANK-OUT SIGN	-	25	-
NETWORK SWITCH II OR III	1	35	35
CELLULAR MODEM	1	15	15
TOTAL UPS SIZING			458
UPS CHARGING	1	225	225
BATTERY HEATER MAT	1	180	180
CABINET HEATER	1	200	200
FLASHER	-	15	-
LED STREET NAME SIGN	-	120	-
LUMINAIRE	-	240	-
TOTAL SERVICE WIRE SIZING			1063

ENERGY COSTS TO:
ILLINOIS DEPARTMENT OF TRANSPORTATION
01 WEST CENTER COURT
SCHAUMBURG, IL 60196-1096

ENERGY SUPPLY: CONTACT: DAVE SCHACHT
PHONE: (630) 437-2129
COMPANY: COMED
ACCOUNT NUMBER: ---
METER NUMBER: ---

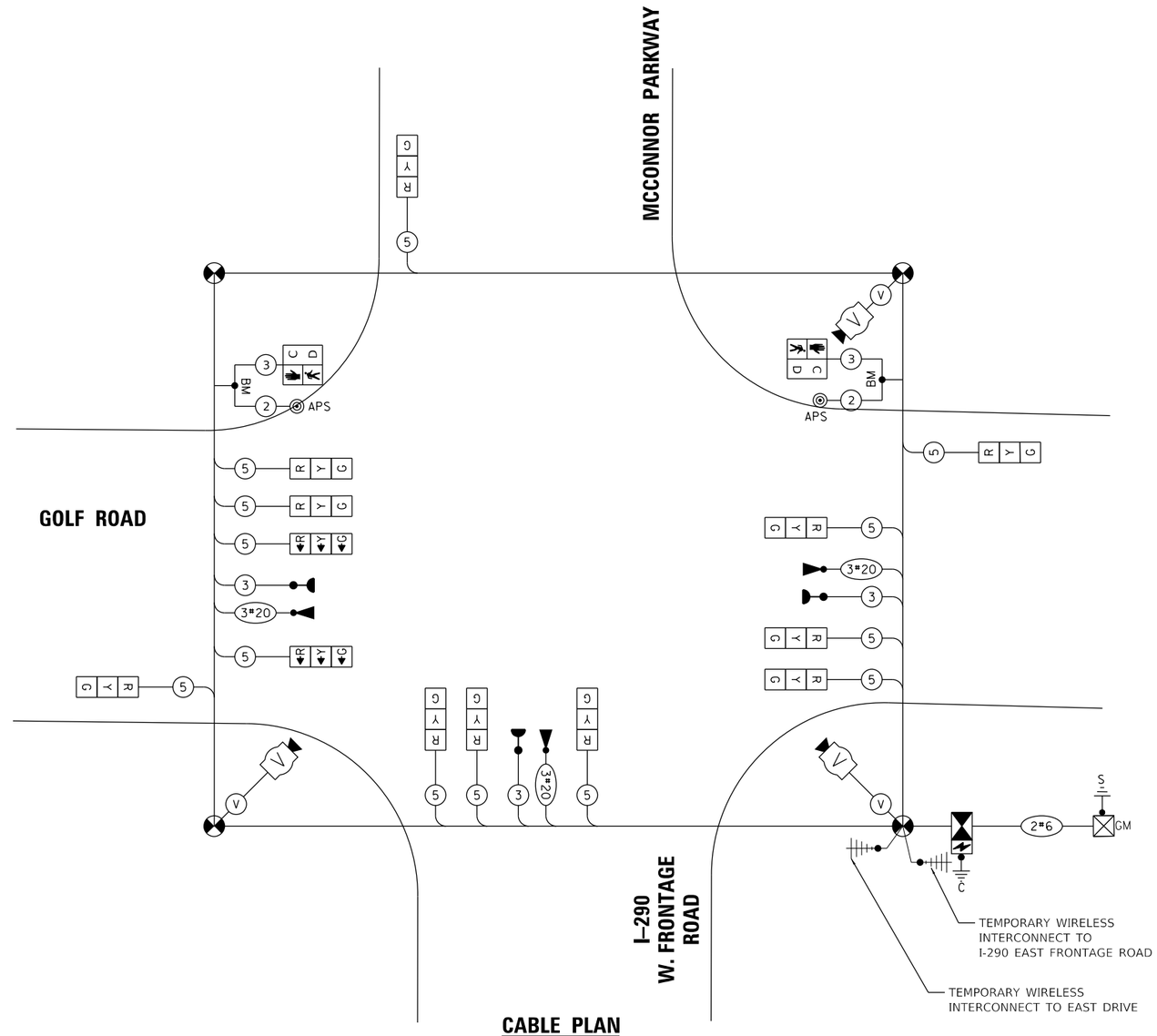

CABLE PLAN

(NOT TO SCALE)

TS 91
ECON 78

MODEL: Default
FILE NAME: F:\861-078 VOS McConnor Parkway\CADD Sheets\Contract 02 CADD Sheets\15_Traffic Signal\22-00142-02-PV_SHT_TEMP TRAFFIC SIGNALS_STAGE 01.dgn

BLA, Inc.

USER NAME = jrodriguez	DESIGNED - JR	REVISED -
	DRAWN - JR	REVISED -
PLOT SCALE = 40.0000 ' / in.	CHECKED - GJE	REVISED -
PLOT DATE = 6/4/2025	DATE - 02/18/2025	REVISED -

STATE OF ILLINOIS
DEPARTMENT OF TRANSPORTATION

STAGE 1 TEMPORARY CABLE PLAN, TEMPORARY PHASE DESIGNATION DIAGRAM, AND TEMPORARY EMERGENCY VEHICLE PREEMPTION SEQUENCE
MCCONNOR PARKWAY AT TO GOLF ROAD

SCALE: NTS | SHEET 3 OF 12 SHEETS | STA. N/A TO STA. N/A

F.A.U. RTE.	SECTION	COUNTY	TOTAL SHEETS	SHEET NO.
7008	22-00142-02-PV	COOK	245	151

CONTRACT NO. 61L38
ILLINOIS FED. AID PROJECT

NOTE:
WEST LEG CROSSWALK (NORTH TO SOUTH CROSSING) TO REMAIN CLOSED UNTIL CONSTRUCTION HAS BEEN COMPLETED

WALTER PAYTON DRIVE

PROPOSED ℄ MCCONNOR PARKWAY

MCCONNOR PARKWAY

EX ROW

APPROX. STA. 117+98.25, 63.07 LT

APS

BM

TEMPORARY PEDESTRIAN PUSH BUTTON AND SIGNAL (TYP)

APPROX. STA. 119+18.96, 75.44' LT

EX EASEMENT

MCCONNOR PARKWAY END IMPROVEMENTS STA 66+36.00

MATCHLINE STA. 115+50

MATCHLINE STA. 121+50

116

117

118

119

120+00

121

EXISTING ℄ GOLF ROAD

GOLF ROAD

GM

TEMPORARY WIRELESS INTERCONNECT TO I-290 EAST FRONTAGE ROAD

APPROX. STA. 118+86.77, 65.46 RT

TEMPORARY WIRELESS INTERCONNECT TO WOODFIELD EAST DRIVE

APPROX. STA. 118+02.19, 65.74 RT

I-290 W. FRONTAGE ROAD

SIGN (A)

LEFT ON GREEN ARROW ONLY

R 10-5
30" X 36"

1 REQUIRED

0 20 40 60
SCALE IN FEET

TS 91
ECON 78

MODEL: Default
FILE NAME: F:\861-078 VOS McConnor Parkway\CADD Sheets\Contract 02 CADD Sheets\15_Traffic Signals\22-00142-02-PV_SHT_TEMP TRAFFIC SIGNALS_STAGE 02.dgn

BLA, Inc.

USER NAME = jrodriguez	DESIGNED - JR	REVISED -	
	DRAWN - JR	REVISED -	
PLOT SCALE = 40.0000 ' / in.	CHECKED - GJE	REVISED -	
PLOT DATE = 6/4/2025	DATE - 02/18/2025	REVISED -	

STATE OF ILLINOIS
DEPARTMENT OF TRANSPORTATION

STAGE 2 TEMPORARY TRAFFIC SIGNAL INSTALLATION PLAN AND EXISTING TRAFFIC SIGNAL EQUIPMENT REMOVAL PLAN
MCCONNOR PARKWAY AT GOLF ROAD

SCALE: 1"=20' | SHEET 4 OF 12 SHEETS | STA. 39+00 TO STA. 44+50

F.A.U. RTE.	SECTION	COUNTY	TOTAL SHEETS	SHEET NO.
7008	22-00142-02-PV	COOK	245	152

CONTRACT NO. 61L38

ILLINOIS FED. AID PROJECT

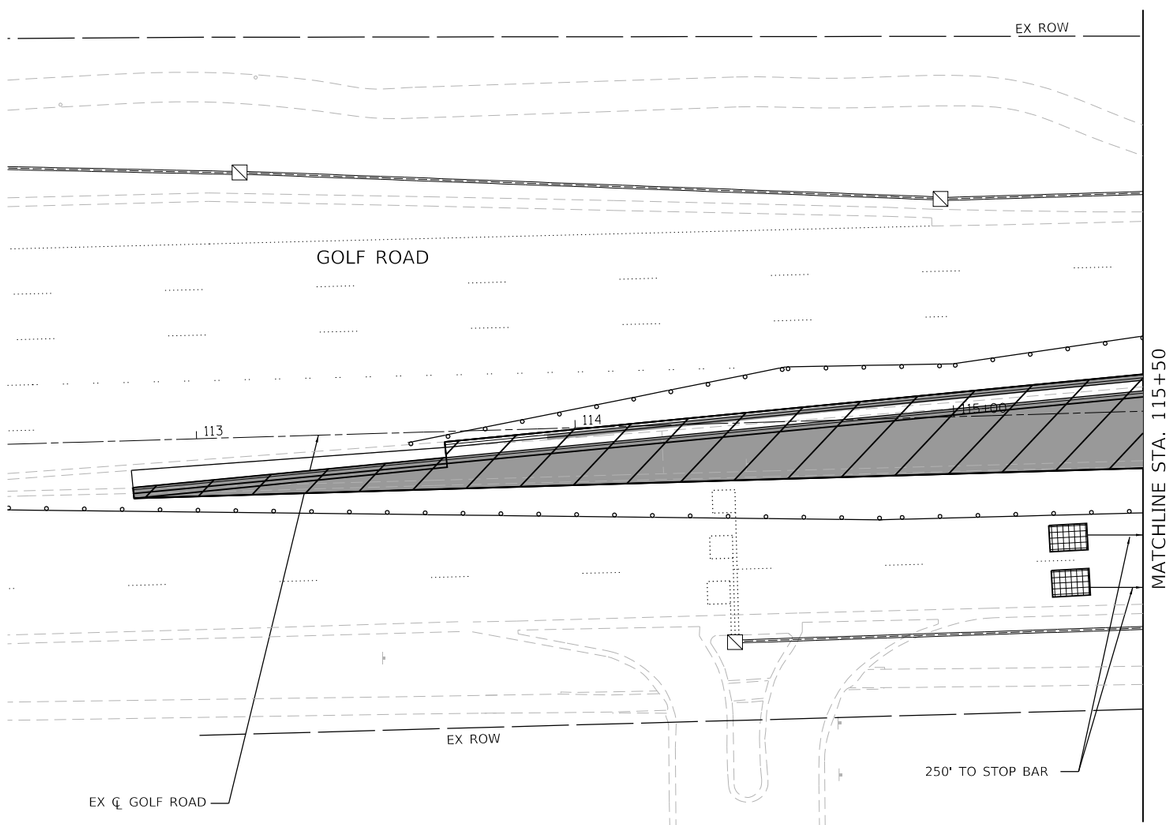

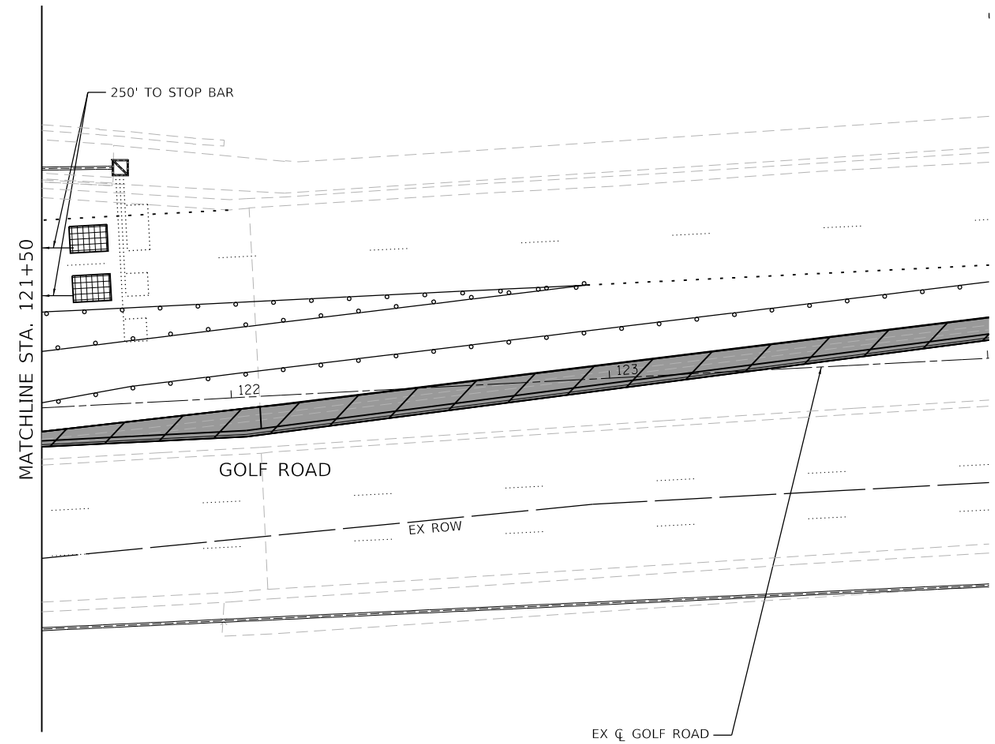

0 20 40 60
SCALE IN FEET

TS 91
ECON 78

MODEL: Default
FILE NAME: F:\061-078 vos McConnor Parkway\CADD Sheets\Contract 02 CADD Sheets\15 Traffic Signals\22-00142-02-PV_SHT_TEMP TRAFFIC SIGNALS_STAGE 02.dgn

BLA, Inc.

USER NAME = jrodriguez	DESIGNED - JR	REVISED -	
	DRAWN - JR	REVISED -	
PLOT SCALE = 40.0000 ' / in.	CHECKED - GJE	REVISED -	
PLOT DATE = 6/4/2025	DATE - 02/18/2025	REVISED -	

STATE OF ILLINOIS
DEPARTMENT OF TRANSPORTATION

STAGE 2 TEMPORARY TRAFFIC SIGNAL INSTALLATION PLAN AND EXISTING TRAFFIC SIGNAL EQUIPMENT REMOVAL PLAN
MCCONNOR PARKWAY AT GOLF ROAD

SCALE: 1"=20' | SHEET 5 OF 12 SHEETS | STA. 112+50 TO STA. 124+00

F.A.U. RTE.	SECTION	COUNTY	TOTAL SHEETS	SHEET NO.
7008	22-00142-02-PV	COOK	245	153

CONTRACT NO. 61L38

ILLINOIS FED. AID PROJECT

TEMPORARY CONTROLLER SEQUENCE

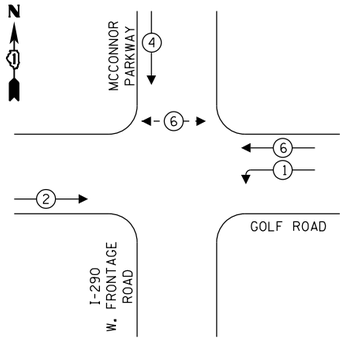

LEGEND:

- PROTECTED PHASE
- PROTECTED/PERMITTED PHASE
- PEDESTRIAN PHASE
- OL OVERLAP

TEMPORARY EMERGENCY VEHICLE PREEMPTION SEQUENCE

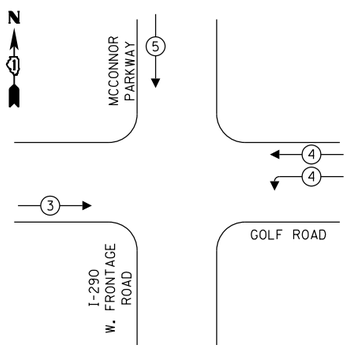

TRAFFIC SIGNAL ELECTRICAL SERVICE REQUIREMENTS

EQUIPMENT TYPE	QUANTITY	UNIT WATTAGE	TOTAL WATTAGE
SIGNAL HEAD 1 OR 3-SECTION	12	11	132
4-SECTION	-	14	-
5-SECTION	-	13	-
PROGRAMMABLE 3-SECTION	-	22	-
4-SECTION	-	32	-
5-SECTION	-	28	-
PEDESTRIAN SIGNAL	2	15	30
CONTROLLER	1	150	150
MASTER CONTROLLER	-	100	-
UPS	1	25	25
DETECTION RADAR OR VIDEO	3	20	60
BLANK-OUT SIGN	-	25	-
NETWORK SWITCH II OR III	1	35	35
CELLULAR MODEM	1	15	15
TOTAL UPS SIZING			447
UPS CHARGING	1	225	225
BATTERY HEATER MAT	1	180	180
CABINET HEATER	1	200	200
FLASHER	-	15	-
LED STREET NAME SIGN	-	120	-
LUMINAIRE	-	240	-
TOTAL SERVICE WIRE SIZING			1,052

ENERGY COSTS TO:
ILLINOIS DEPARTMENT OF TRANSPORTATION
01 WEST CENTER COURT
SCHAUMBURG, IL 60196-1096

ENERGY SUPPLY: CONTACT: DAVE SCHACHT
PHONE: (630) 437-2129
COMPANY: COMED
ACCOUNT NUMBER: ---
METER NUMBER: ---

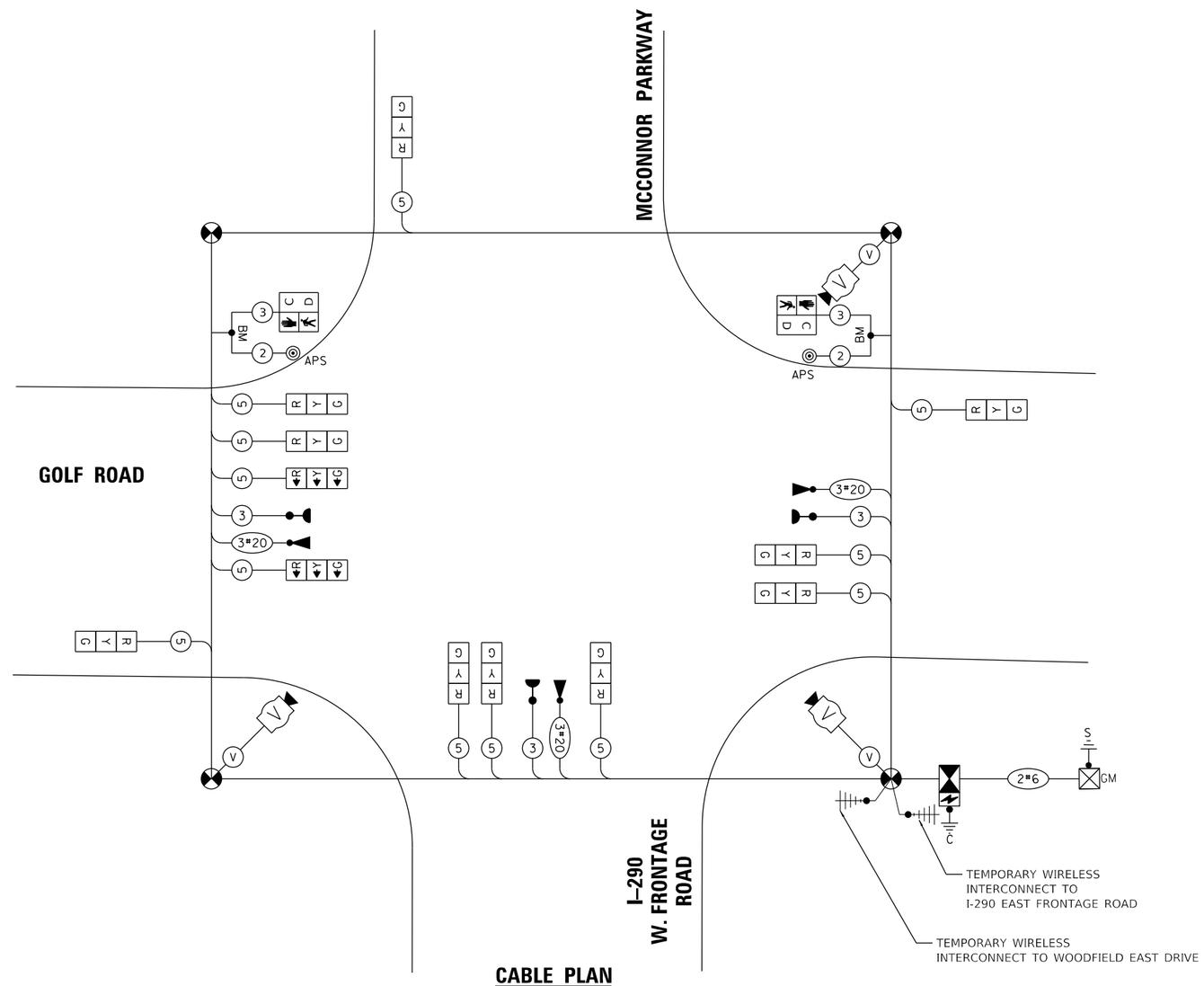

CABLE PLAN

(NOT TO SCALE)

TS 91
ECON 78

MODEL: Default
FILE NAME: F:\861-078 VoS McConnor Parkway\CADD Sheets\Contract 02 CADD Sheets\15_Traffic Signal\22-00142-02-PV_SHT TEMP TRAFFIC SIGNALS STAGE 02.dgn

BLA, Inc.	USER NAME = jrodriguez	DESIGNED - JR	REVISED -
		DRAWN - JR	REVISED -
	PLOT SCALE = 40.0000 ' / in.	CHECKED - GJE	REVISED -
	PLOT DATE = 6/4/2025	DATE - 02/18/2025	REVISED -

STATE OF ILLINOIS
DEPARTMENT OF TRANSPORTATION

STAGE 2 TEMPORARY CABLE PLAN, TEMPORARY PHASE DESIGNATION DIAGRAM, AN TEMPORARY EMERGENCY VEHICLE PREEMPTION SEQUENCE MCCONNOR PARKWAY AT GOLF ROAD

SCALE: NTS | SHEET 6 OF 12 SHEETS | STA. N/A TO STA. N/A

F.A.U. RTE.	SECTION	COUNTY	TOTAL SHEETS	SHEET NO.
7008	22-00142-02-PV	COOK	245	154
		CONTRACT NO. 61L38		
		ILLINOIS FED. AID PROJECT		

WALTER PAYTON DRIVE

PROPOSED ℄ MCCONNOR PARKWAY

MCCONNOR PARKWAY

EX ROW

APPROX. STA. 117+98.25, 63.07 LT

TEMPORARY PEDESTRIAN PUSH BUTTON AND SIGNAL (TYP)

APPROX. STA. 119+18.96, 75.44' LT

EX EASEMENT

MCCONNOR PARKWAY END IMPROVEMENTS STA 66+36.00

MATCHLINE STA. 115+50

MATCHLINE STA. 121+50

EXISTING ℄ GOLF ROAD

GOLF ROAD

APPROX. STA. 118+02.19, 65.74 RT

TEMPORARY WIRELESS INTERCONNECT TO I-290 EAST FRONTAGE ROAD

APPROX. STA. 118+86.77, 65.46 RT

TEMPORARY WIRELESS INTERCONNECT TO WOODFIELD EAST DRIVE

I-290 W. FRONTAGE ROAD

SIGN (A)

LEFT ON GREEN ARROW ONLY

R 10-5
30" X 36"
1 REQUIRED

0 20 40 60
SCALE IN FEET

TS 91
ECON 78

MODEL: Default
FILE NAME: F:\061-078 VoS McConnor Parkway\CADD Sheets\Contract 02 CADD Sheets\15 Traffic Signal\22-00142-02-PV_SHT_TEMP TRAFFIC SIGNALS_STAGE 02W.dgn

BLA, Inc.

USER NAME = jrodriguez	DESIGNED - JR	REVISED -
	DRAWN - JR	REVISED -
PLOT SCALE = 40.0000 ' / in.	CHECKED - GJE	REVISED -
PLOT DATE = 6/4/2025	DATE - 02/18/2025	REVISED -

STATE OF ILLINOIS
DEPARTMENT OF TRANSPORTATION

WINTER STAGE TEMPORARY TRAFFIC SIGNAL INSTALLATION PLAN
MCCONNOR PARKWAY AT GOLF ROAD

SCALE: 1"=20' | SHEET 7 OF 12 SHEETS | STA. 39+00 TO STA. 44+50

F.A.U. RTE.	SECTION	COUNTY	TOTAL SHEETS	SHEET NO.
7008	22-00142-02-PV	COOK	245	155

CONTRACT NO. 61L38

ILLINOIS FED. AID PROJECT

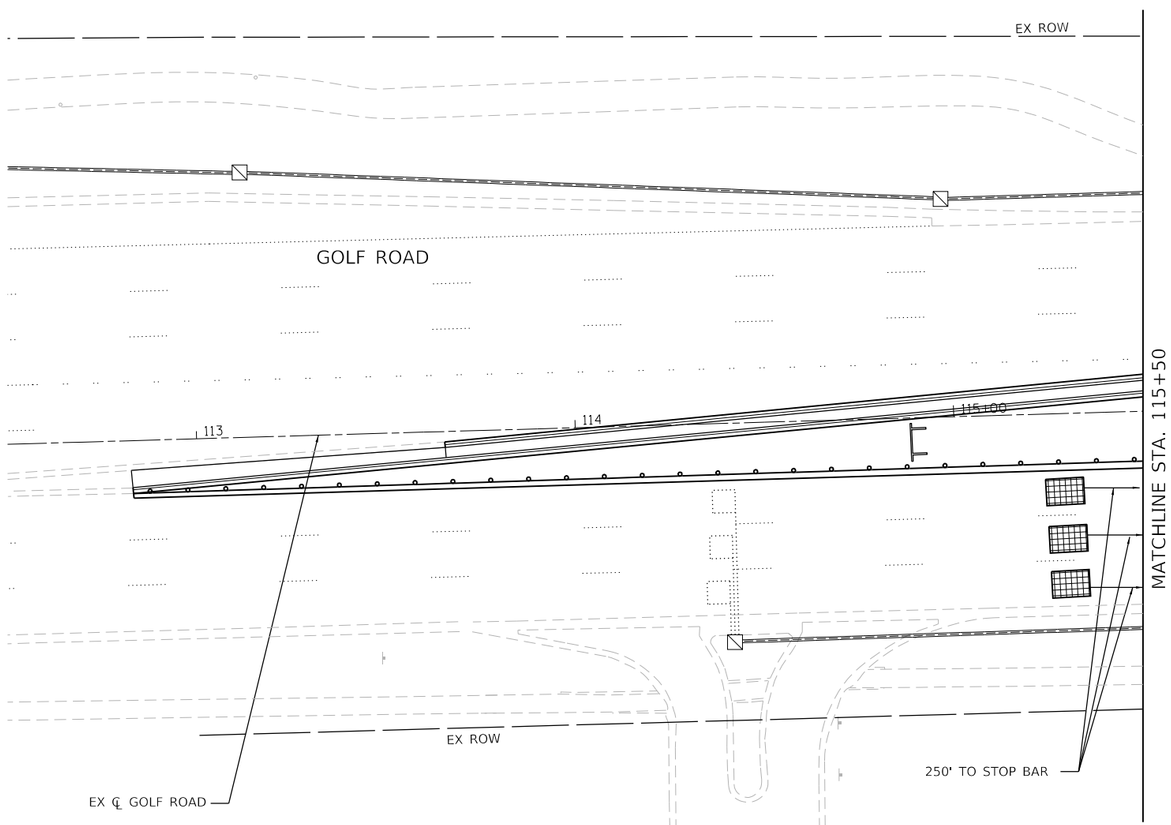

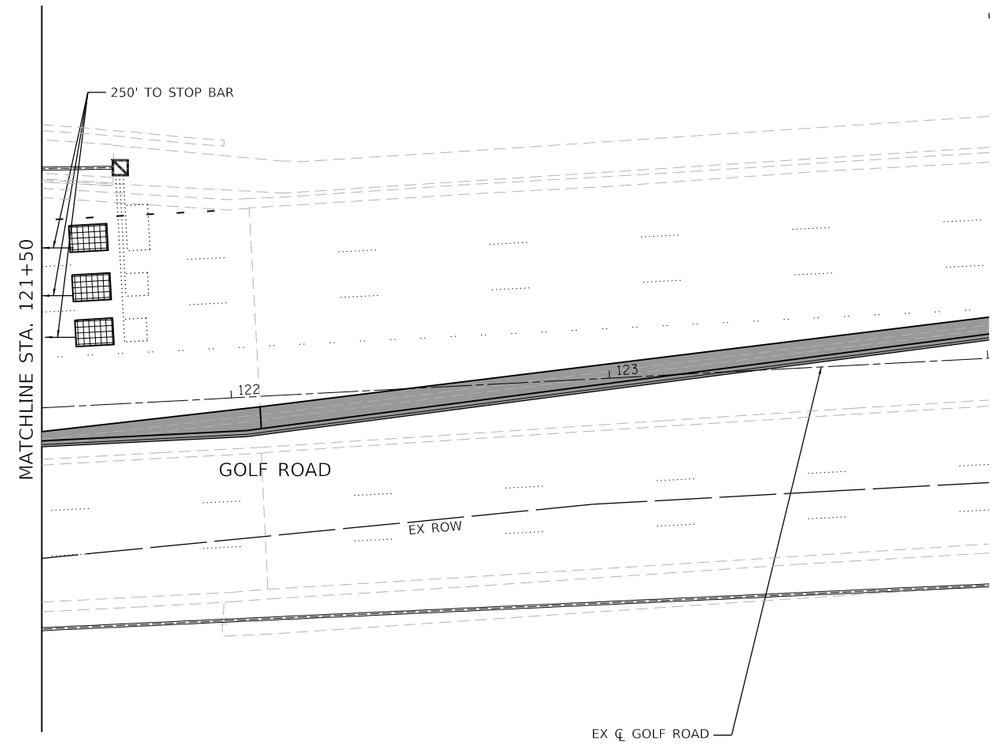

0 20 40 60
SCALE IN FEET

TS 91
ECON 78

MODEL: Default
FILE NAME: F:\061-078 vos McConnor Parkway\CADD Sheets\Contract 02 CADD Sheets\15 Traffic Signals\22-00142-02-PV_SHT_TEMP TRAFFIC SIGNALS_STAGE 02W.dgn

BLA, Inc.	USER NAME = jrodriguez	DESIGNED - JR	REVISED -
		DRAWN - JR	REVISED -
	PLOT SCALE = 40.0000 ' / in.	CHECKED - GJE	REVISED -
	PLOT DATE = 6/4/2025	DATE - 02/18/2025	REVISED -

STATE OF ILLINOIS
DEPARTMENT OF TRANSPORTATION

WINTER STAGE TEMPORARY TRAFFIC SIGNAL INSTALLATION PLAN
MCCONNOR PARKWAY AT GOLF ROAD

SCALE: 1"=20' | SHEET 8 OF 12 SHEETS | STA. 112+50 TO STA. 124+00

F.A.U. RTE.	SECTION	COUNTY	TOTAL SHEETS	SHEET NO.
7008	22-00142-02-PV	COOK	245	156
		CONTRACT NO. 61L38		
		ILLINOIS FED. AID PROJECT		

TEMPORARY CONTROLLER SEQUENCE

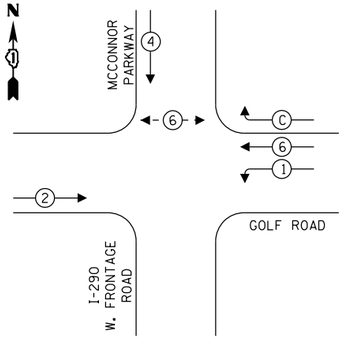

LEGEND:

- PROTECTED PHASE
- PROTECTED/PERMITTED PHASE
- PEDESTRIAN PHASE
- OL OVERLAP

RIGHT TURN OVERLAP PHASE DESIGNATION:

OVERLAP LETTER		PERMISSIVE PHASE		PROTECTED PHASE
C	=	6	+	4

TEMPORARY EMERGENCY VEHICLE PREEMPTION SEQUENCE

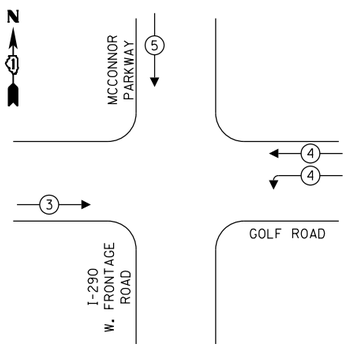

TRAFFIC SIGNAL ELECTRICAL SERVICE REQUIREMENTS

EQUIPMENT TYPE	QUANTITY	UNIT WATTAGE	TOTAL WATTAGE
SIGNAL HEAD 1 OR 3-SECTION	10	11	110
4-SECTION	-	14	-
5-SECTION	2	13	26
PROGRAMMABLE 3-SECTION	-	22	-
4-SECTION	-	32	-
5-SECTION	-	28	-
PEDESTRIAN SIGNAL	2	15	30
CONTROLLER	1	150	150
MASTER CONTROLLER	-	100	-
UPS	1	25	25
DETECTION RADAR OR VIDEO	3	20	60
BLANK-OUT SIGN	-	25	-
NETWORK SWITCH II OR III	1	35	35
CELLULAR MODEM	1	15	15
TOTAL UPS SIZING			451
UPS CHARGING	1	225	225
BATTERY HEATER MAT	1	180	180
CABINET HEATER	1	200	200
FLASHER	-	15	-
LED STREET NAME SIGN	-	120	-
LUMINAIRE	-	240	-
TOTAL SERVICE WIRE SIZING			1,056

ENERGY COSTS TO:
ILLINOIS DEPARTMENT OF TRANSPORTATION
01 WEST CENTER COURT
SCHAUMBURG, IL 60196-1096

ENERGY SUPPLY: CONTACT: DAVE SCHACHT
PHONE: (630) 437-2129
COMPANY: COMED
ACCOUNT NUMBER: ---
METER NUMBER: ---

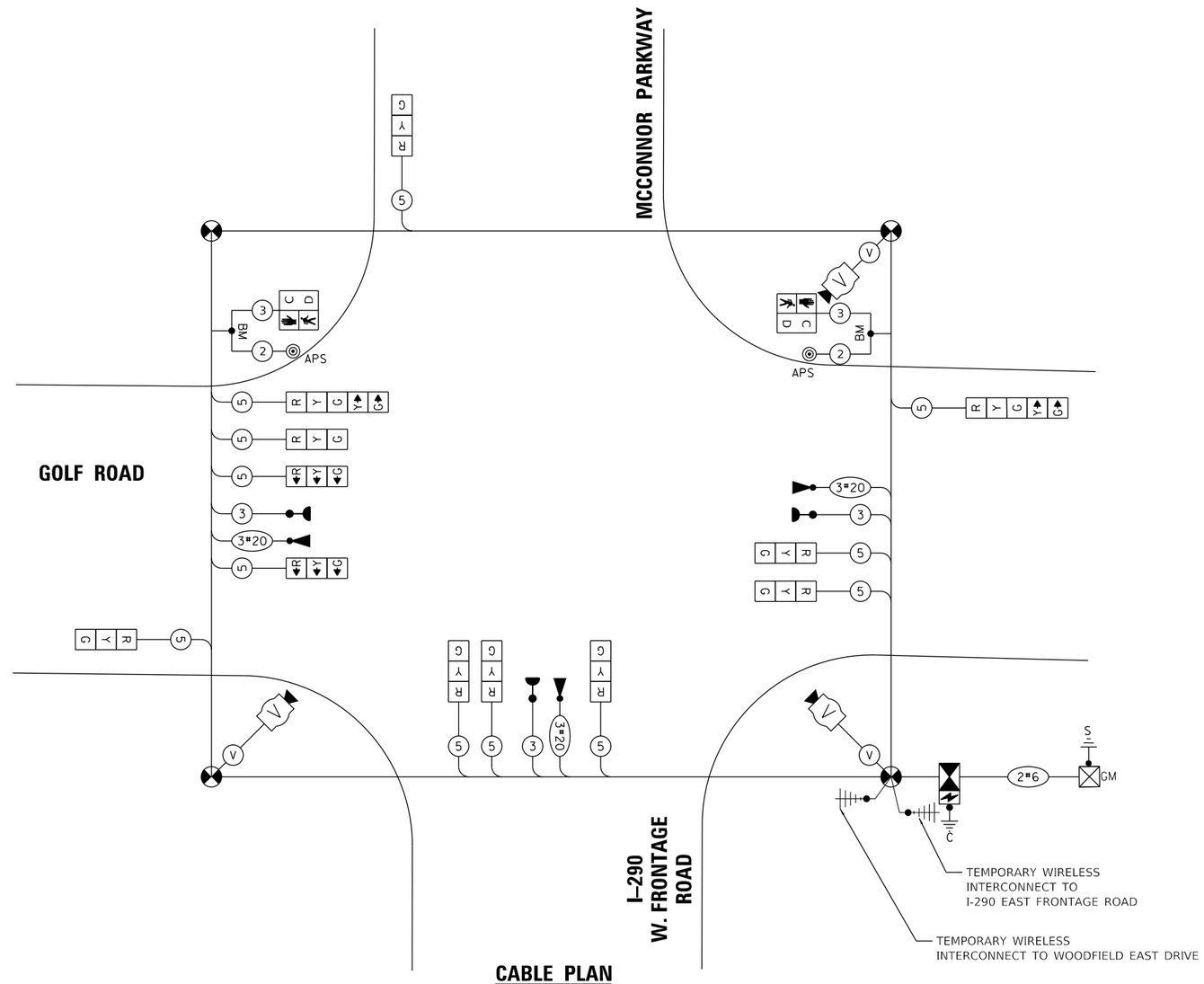

CABLE PLAN

(NOT TO SCALE)

TS 91
ECON 78

MODEL: Default
FILE NAME: F:\861-078 VoS McConnor Parkway\CADD Sheets\Contract 02 CADD Sheets\15_Traffic Signal\22-00142-02-PV_SHT TEMP TRAFFIC SIGNALS STAGE 02W.dgn

BLA, Inc.	USER NAME = jrodriguez	DESIGNED - JR	REVISED -
		DRAWN - JR	REVISED -
	PLOT SCALE = 40.0000 ' / in.	CHECKED - GJE	REVISED -
	PLOT DATE = 6/4/2025	DATE - 02/18/2025	REVISED -

STATE OF ILLINOIS
DEPARTMENT OF TRANSPORTATION

WINTER STAGE TEMPORARY CABLE PLAN, TEMPORARY PHASE DESIGNATION DIAGRAM, AN TEMPORARY EMERGENCY VEHICLE PREEMPTION SEQUENCE MCCONNOR PARKWAY AT GOLF ROAD

SCALE: NTS | SHEET 9 OF 12 SHEETS | STA. N/A TO STA. N/A

F.A.U. RTE.	SECTION	COUNTY	TOTAL SHEETS	SHEET NO.
7008	22-00142-02-PV	COOK	245	157
		CONTRACT NO. 61L38		
		ILLINOIS FED. AID PROJECT		

WALTER PAYTON DRIVE

MCCONNOR PARKWAY

ONLY

165'00

PROPOSED ℄ MCCONNOR PARKWAY

EX ROW

EX ROW

EX ROW

EX ROW

EX ROW

EX ROW

EX ROW

EX ROW

EX ROW

EX EASEMENT

TEMPORARY PEDESTRIAN PUSH BUTTON AND SIGNAL (TYP)
APPROX. STA.
119+18.96, 75.44' LT

APPROX. STA.
117+98.25, 63.07 LT

APPROX. STA.
118+02.19, 65.74 RT

APPROX. STA.
118+86.77, 65.46 RT

APS
BM

APS
BM

GM

G

A

A

ONLY

GOLF ROAD

MATCHLINE STA. 115+50

MATCHLINE STA. 121+50

116

117

118

119

120+00

121

EXISTING ℄ GOLF ROAD

TEMPORARY WIRELESS INTERCONNECT TO I-290 EAST FRONTAGE ROAD

TEMPORARY WIRELESS INTERCONNECT TO WOODFIELD EAST DRIVE

I-290
W. FRONTAGE
ROAD

SIGN (A)

LEFT ON GREEN ARROW ONLY

R 10-5
30" X 36"

1 REQUIRED

0 20 40 60
SCALE IN FEET

TS 91
ECON 78

MODEL: Default
FILE NAME: F:\B61-078 VoS McConnor Parkway\CADD Sheets\Contract 02 CADD Sheets\15_Traffic Signals\22-00142-02-PV_Sht_TEMP TRAFFIC SIGNALS STAGE 03.dgn

BLA, Inc.	USER NAME = jrodriguez	DESIGNED - JR	REVISED -
		DRAWN - JR	REVISED -
	PLOT SCALE = 40.0000 ' / in.	CHECKED - GJE	REVISED -
	PLOT DATE = 6/4/2025	DATE - 02/18/2025	REVISED -

STATE OF ILLINOIS
DEPARTMENT OF TRANSPORTATION

STAGE 3 TEMPORARY TRAFFIC SIGNAL INSTALLATION PLAN AND EXISTING TRAFFIC SIGNAL EQUIPMENT REMOVAL PLAN
MCCONNOR PARKWAY AT GOLF ROAD

SCALE: 1"=20' | SHEET 10 OF 12 SHEETS | STA. 39+00 TO STA. 44+50

F.A.U. RTE.	SECTION	COUNTY	TOTAL SHEETS	SHEET NO.
7008	22-00142-02-PV	COOK	245	158

CONTRACT NO. 61L38

ILLINOIS FED. AID PROJECT

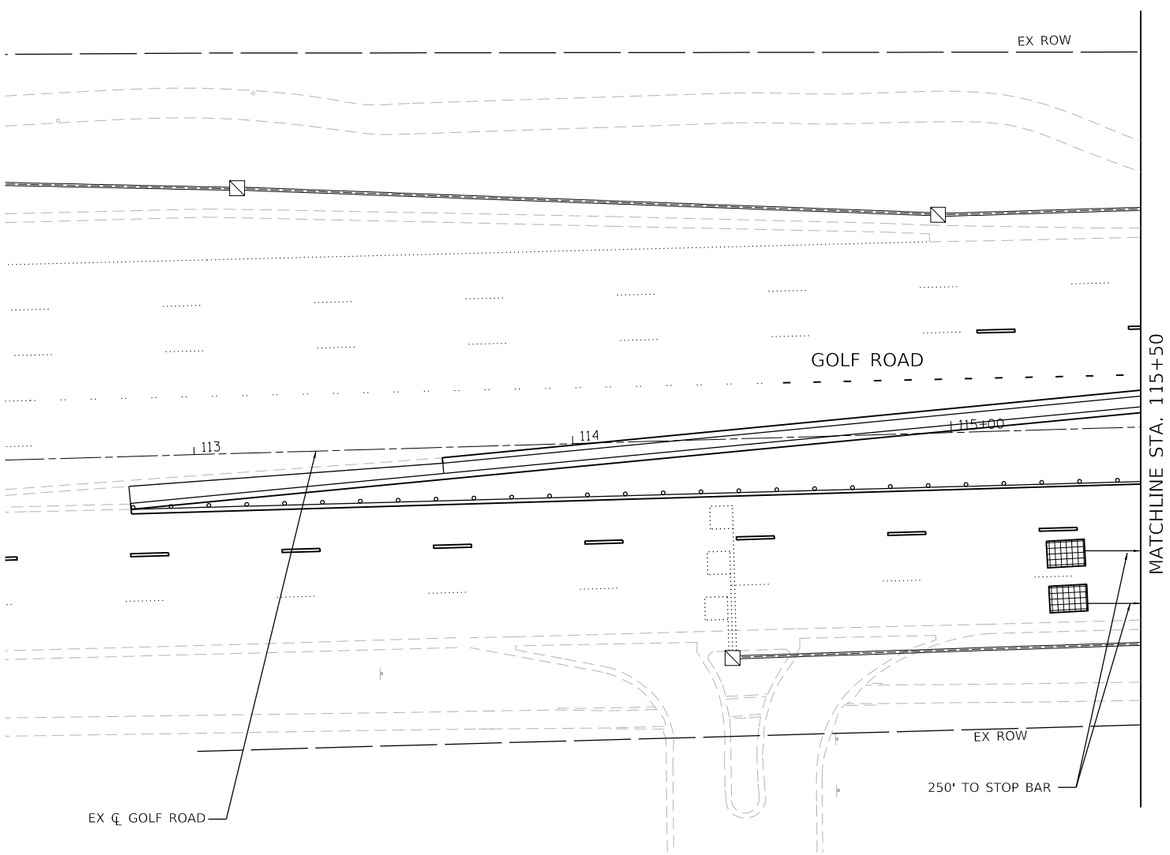

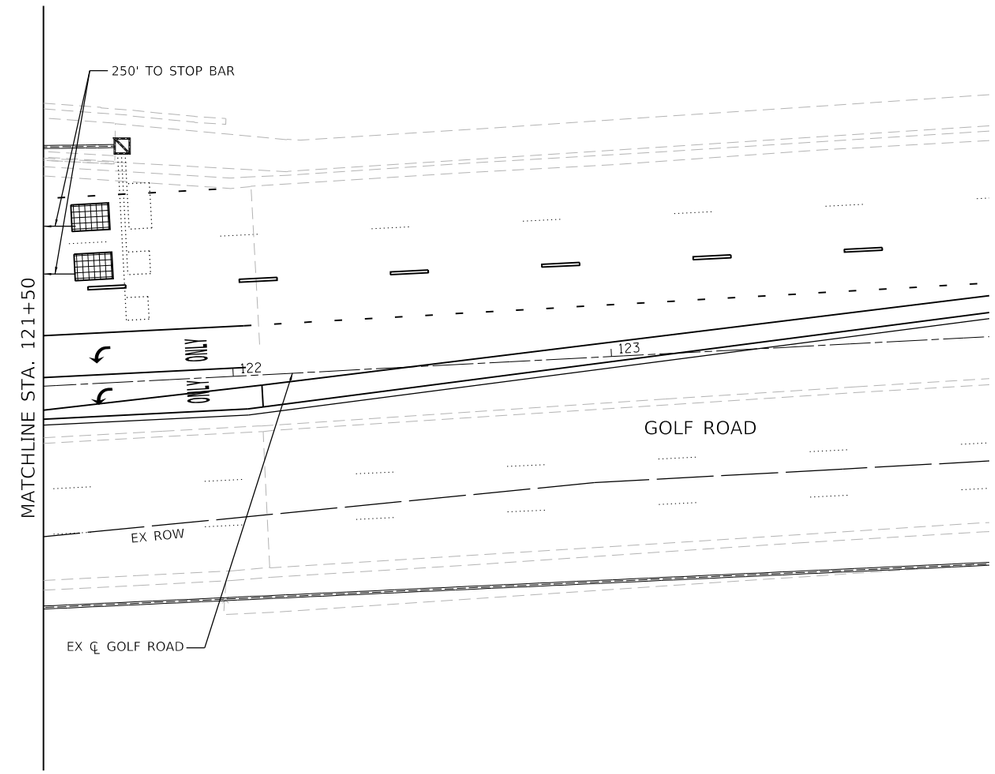

0 20 40 60
SCALE IN FEET

TS 91
ECON 78

MODEL: Default
FILE NAME: F:\861-078 VOS McConnor Parkway\CADD Sheets\Contract 02 CADD Sheets\15_Traffic_Signal\22-00142-02-PV_SHT_TEMP TRAFFIC SIGNALS_STAGE 03.dgn

BLA, Inc.

USER NAME = jrodriguez	DESIGNED - JR	REVISED -	
	DRAWN - JR	REVISED -	
PLOT SCALE = 40.0000 ' / in.	CHECKED - GJE	REVISED -	
PLOT DATE = 6/4/2025	DATE - 02/18/2025	REVISED -	

STATE OF ILLINOIS
DEPARTMENT OF TRANSPORTATION

STAGE 3 TEMPORARY TRAFFIC SIGNAL INSTALLATION PLAN AND EXISTING TRAFFIC SIGNAL EQUIPMENT REMOVAL PLAN
MCCONNOR PARKWAY AT GOLF ROAD

SCALE: 1"=20' | SHEET 11 OF 12 SHEETS | STA. 112+50 TO STA. 124+00

F.A.U. RTE.	SECTION	COUNTY	TOTAL SHEETS	SHEET NO.
7008	22-00142-02-PV	COOK	245	159

CONTRACT NO. 61L38

ILLINOIS FED. AID PROJECT

TEMPORARY CONTROLLER SEQUENCE

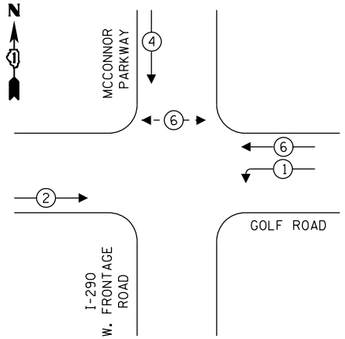

LEGEND:

- PROTECTED PHASE
- PROTECTED/PERMITTED PHASE
- PEDESTRIAN PHASE
- OL OVERLAP

TEMPORARY EMERGENCY VEHICLE PREEMPTION SEQUENCE

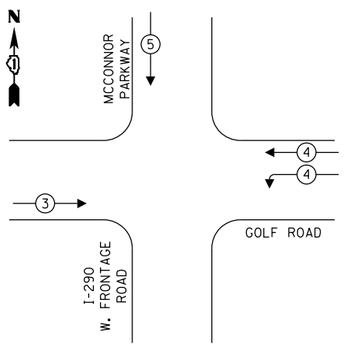

TRAFFIC SIGNAL ELECTRICAL SERVICE REQUIREMENTS

EQUIPMENT TYPE	QUANTITY	UNIT WATTAGE	TOTAL WATTAGE
SIGNAL HEAD 1 OR 3-SECTION	13	11	143
4-SECTION	-	14	-
5-SECTION	-	13	-
PROGRAMMABLE 3-SECTION	-	22	-
4-SECTION	-	32	-
5-SECTION	-	28	-
PEDESTRIAN SIGNAL	2	15	30
CONTROLLER	1	150	150
MASTER CONTROLLER	-	100	-
UPS	1	25	25
DETECTION RADAR OR VIDEO	3	20	60
BLANK-OUT SIGN	-	25	-
NETWORK SWITCH II OR III	1	35	35
CELLULAR MODEM	1	15	15
TOTAL UPS SIZING			458
UPS CHARGING	1	225	225
BATTERY HEATER MAT	1	180	180
CABINET HEATER	1	200	200
FLASHER	-	15	-
LED STREET NAME SIGN	-	120	-
LUMINAIRE	-	240	-
TOTAL SERVICE WIRE SIZING			1,063

ENERGY COSTS TO:
ILLINOIS DEPARTMENT OF TRANSPORTATION
01 WEST CENTER COURT
SCHAUMBURG, IL 60196-1096

ENERGY SUPPLY: CONTACT: DAVE SCHACHT
PHONE: (630) 437-2129
COMPANY: COMED
ACCOUNT NUMBER: ---
METER NUMBER: ---

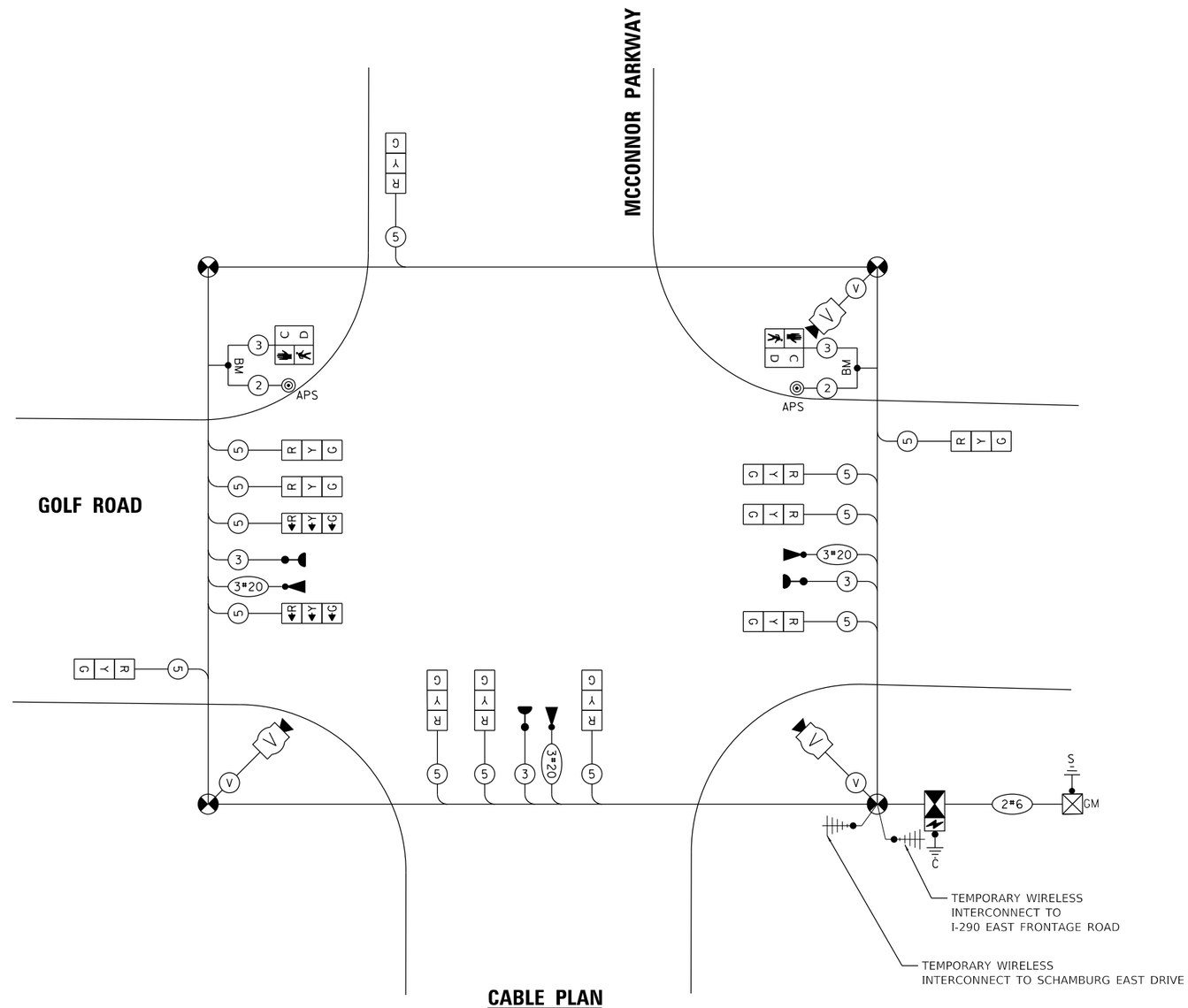

CABLE PLAN

(NOT TO SCALE)

TS 91
ECON 78

MODEL: Default
FILE NAME: F:\861-078 VoS McConnor Parkway\CADD Sheets\Contract 02 CADD Sheets\15_Traffic Signals\22-00142-02-PV_SHT_TEMP TRAFFIC SIGNALS STAGE 03.dgn

BLA, Inc.

USER NAME = jrodriguez	DESIGNED - JR	REVISED -
	DRAWN - JR	REVISED -
PLOT SCALE = 40.0000 ' / in.	CHECKED - GJE	REVISED -
PLOT DATE = 6/4/2025	DATE - 02/18/2025	REVISED -

STATE OF ILLINOIS
DEPARTMENT OF TRANSPORTATION

STAGE 3 TEMPORARY CABLE PLAN, TEMPORARY PHASE DESIGNATION DIAGRAM, AN TEMPORARY EMERGENCY VEHICLE PREEMPTION SEQUENCE MCCONNOR PARKWAY AT GOLF ROAD

SCALE: NTS | SHEET 12 OF 12 SHEETS | STA. N/A TO STA. N/A

F.A.U. RTE.	SECTION	COUNTY	TOTAL SHEETS	SHEET NO.
7008	22-00142-02-PV	COOK	245	160

CONTRACT NO. 61L38

ILLINOIS FED. AID PROJECT

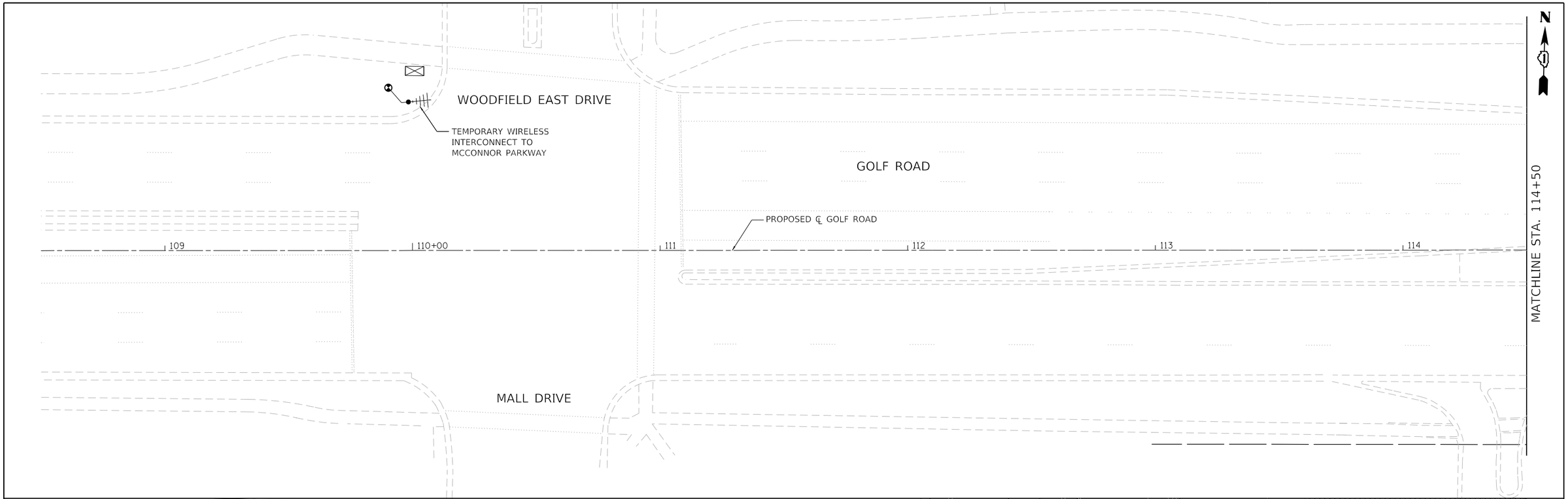

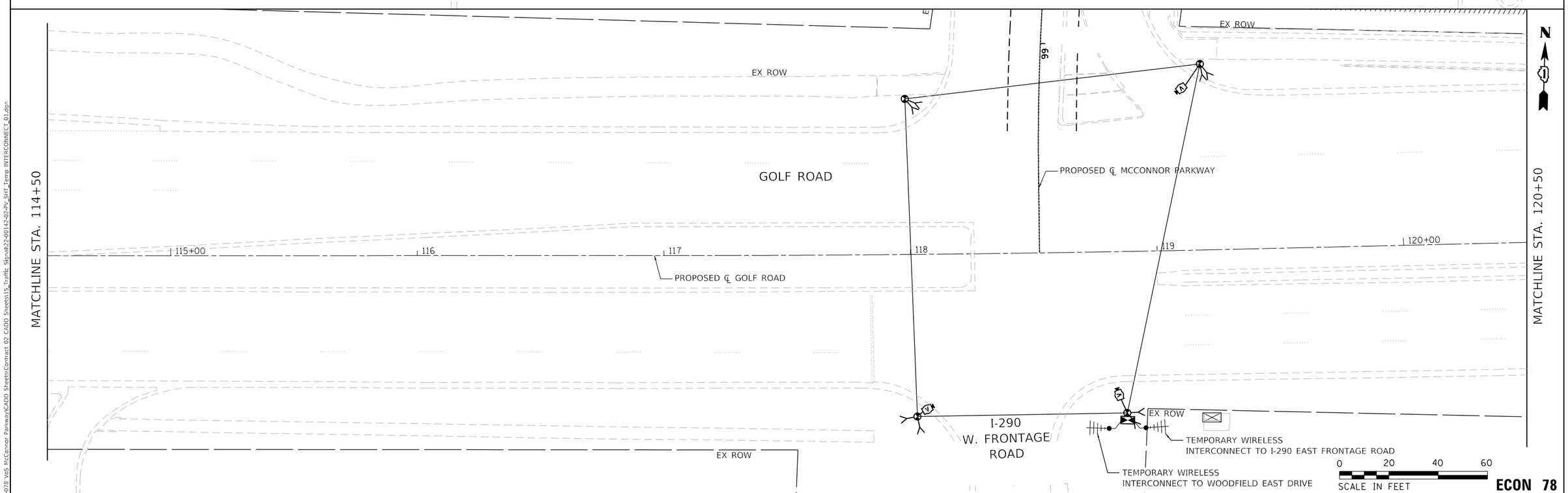

ECON 78

MODEL: Default
FILE NAME: F:\8081-078 VDS McConnor Parkway\CADD Sheets\Contract 02 CADD Sheets\15_Traffic Signal\22-00142-02-PV_SHT_Temp INTERCONNECT_01.dgn

BLA, Inc.	USER NAME = jrodriguez	DESIGNED - JR	REVISED -
		DRAWN - JR	REVISED -
	PLOT SCALE = 40.0000 ' / in.	CHECKED - GJE	REVISED -
	PLOT DATE = 6/4/2025	DATE - 02/18/2025	REVISED -

STATE OF ILLINOIS
DEPARTMENT OF TRANSPORTATION

MCCONNOR PARKWAY RECONSTRUCTION
TEMPORARY INTERCONNECT PLANS

SCALE: 1"=20' | SHEET 1 OF 2 SHEETS | STA. 109+50 TO STA. 120+50

F.A.U. RTE.	SECTION	COUNTY	TOTAL SHEETS	SHEET NO.
7008	22-00142-02-PV	COOK	245	161

CONTRACT NO. 61L38

ILLINOIS FED. AID PROJECT

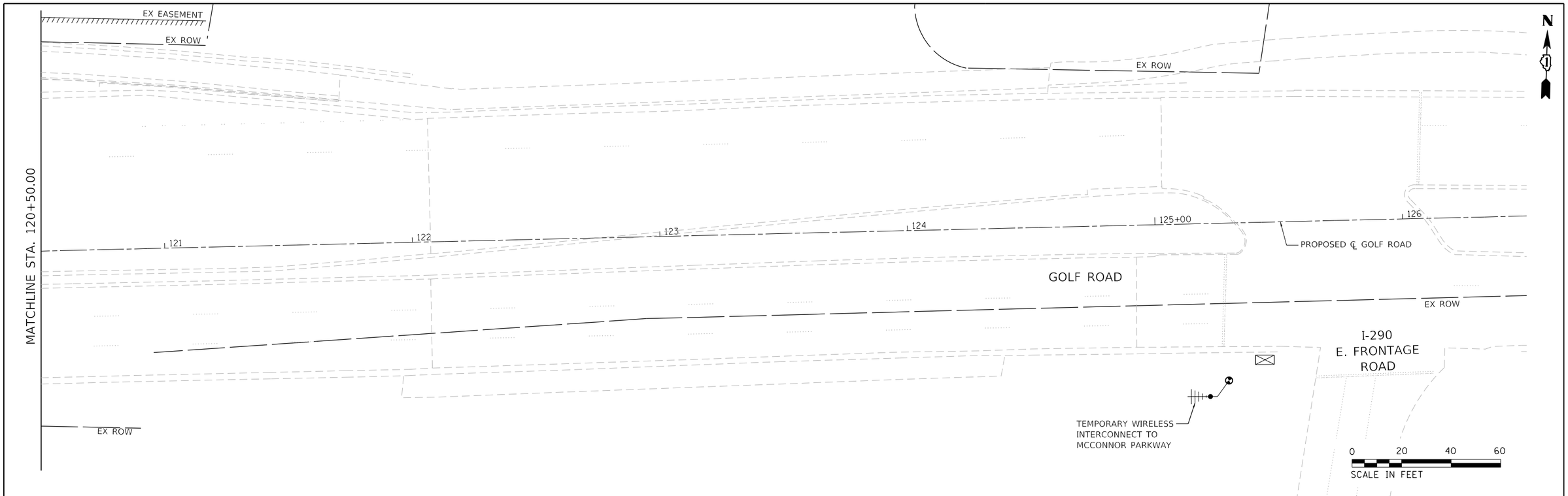

ECON 78

MODEL: Default
FILE NAME: F:\0891-078 Vd5 McConnor Parkway\CADD Sheets\Contract 02 CADD Sheets\15_Traffic Signal\22-00142-02-PV_SHT_Temp INTERCONNECT_02.dgn

BLA, Inc.	USER NAME = jrodriguez	DESIGNED - JR	REVISED -
		DRAWN - JR	REVISED -
	PLOT SCALE = 40.0000 ' / in.	CHECKED - GJE	REVISED -
	PLOT DATE = 6/4/2025	DATE - 02/18/2025	REVISED -

STATE OF ILLINOIS
DEPARTMENT OF TRANSPORTATION

MCCONNOR PARKWAY RECONSTRUCTION
TEMPORARY INTERCONNECT PLANS

SCALE: 1"=20' | SHEET 2 OF 2 SHEETS | STA. 120+50.00 TO STA. 125+50.00

F.A.U. RTE.	SECTION	COUNTY	TOTAL SHEETS	SHEET NO.
7008	22-00142-02-PV	COOK	245	162
		CONTRACT NO. 61L38		
		ILLINOIS FED. AID PROJECT		

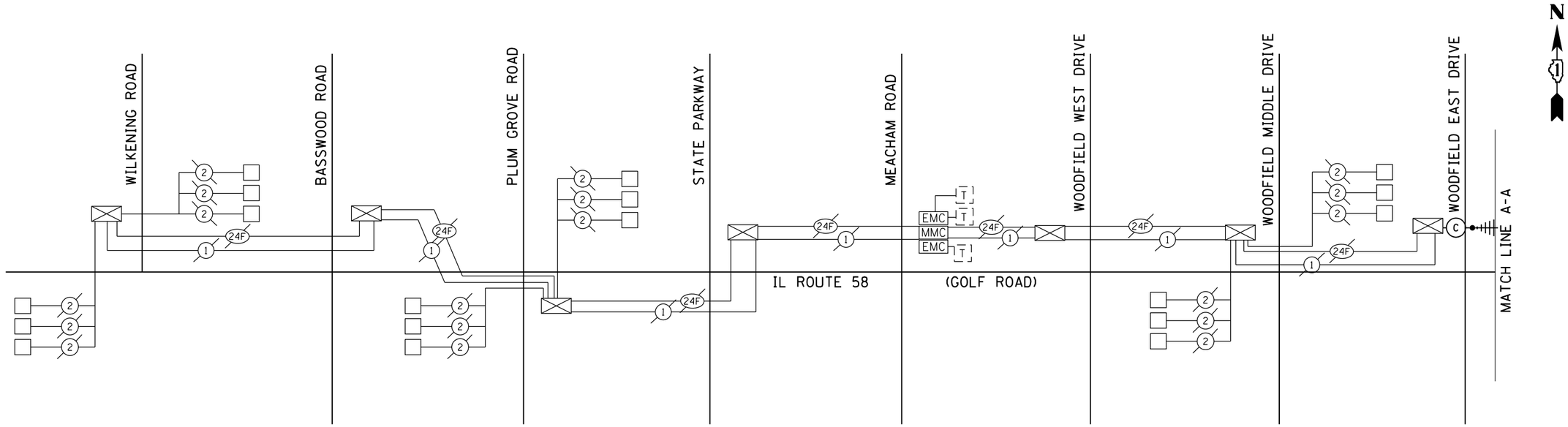

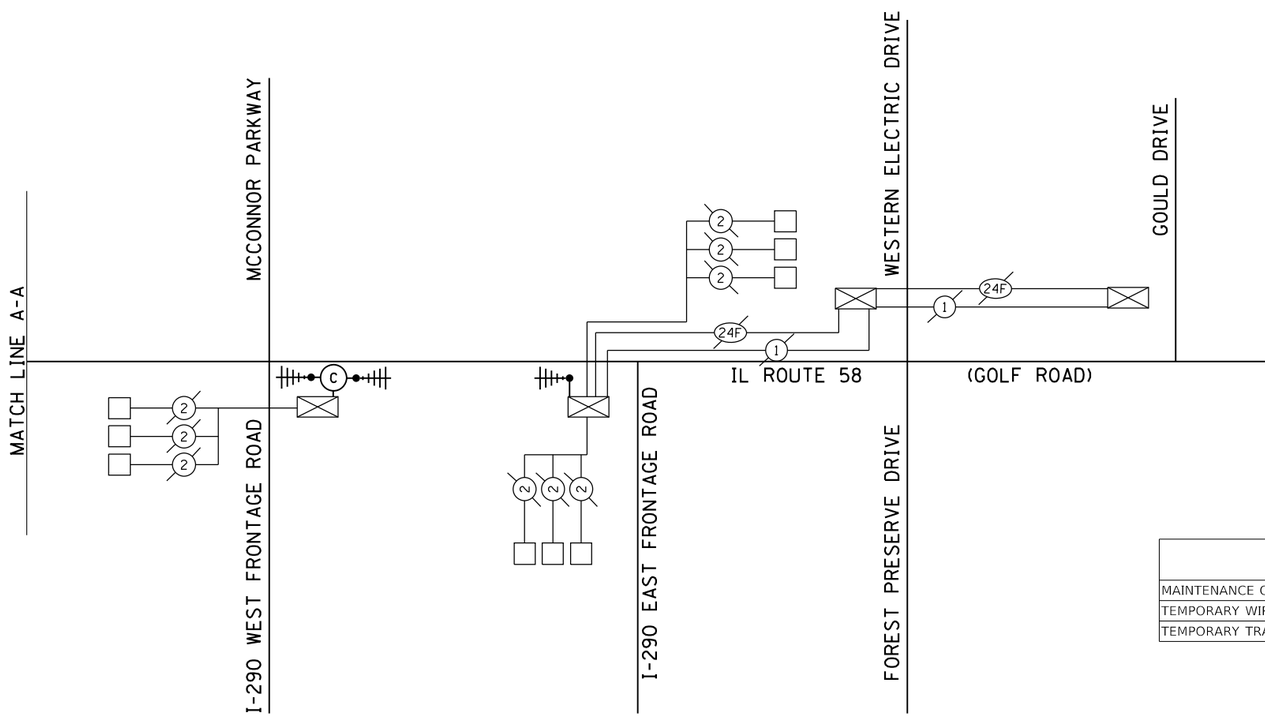

ITEM	UNIT	TOTAL QUANTITY
MAINTENANCE OF EXISTING TRAFFIC SIGNAL INSTALLATION	EACH	2
TEMPORARY WIRELESS INTERCONNECT, COMPLETE	L SUM	1
TEMPORARY TRAFFIC SIGNAL TIMING	EACH	2

ECON 78

MODEL: Default
FILE NAME: F:\861-078 VoS McConnor Parkway\CADD Sheets\Contract 02 CADD Sheets\15 Traffic Signals\22-00142-02-PV_SHT_PR INTERCONNECT TEMP SCHEMATIC.dgn

BLA, Inc.

USER NAME = jrodriguez	DESIGNED - JR	REVISED -
	DRAWN - JR	REVISED -
PLOT SCALE = 40.0000 ' / in.	CHECKED - GJE	REVISED -
PLOT DATE = 6/4/2025	DATE - 02/18/2025	REVISED -

STATE OF ILLINOIS
DEPARTMENT OF TRANSPORTATION

MCCONNOR PARKWAY RECONSTRUCTION
TEMPORARY INTERCONNECT SCHEMATIC

SCALE: 1"=20' | SHEET 1 OF 1 SHEETS | STA. N/A TO STA. N/A

F.A.U. RTE.	SECTION	COUNTY	TOTAL SHEETS	SHEET NO.
7008	22-00142-02-PV	COOK	245	163

CONTRACT NO. 61L38

ILLINOIS FED. AID PROJECT

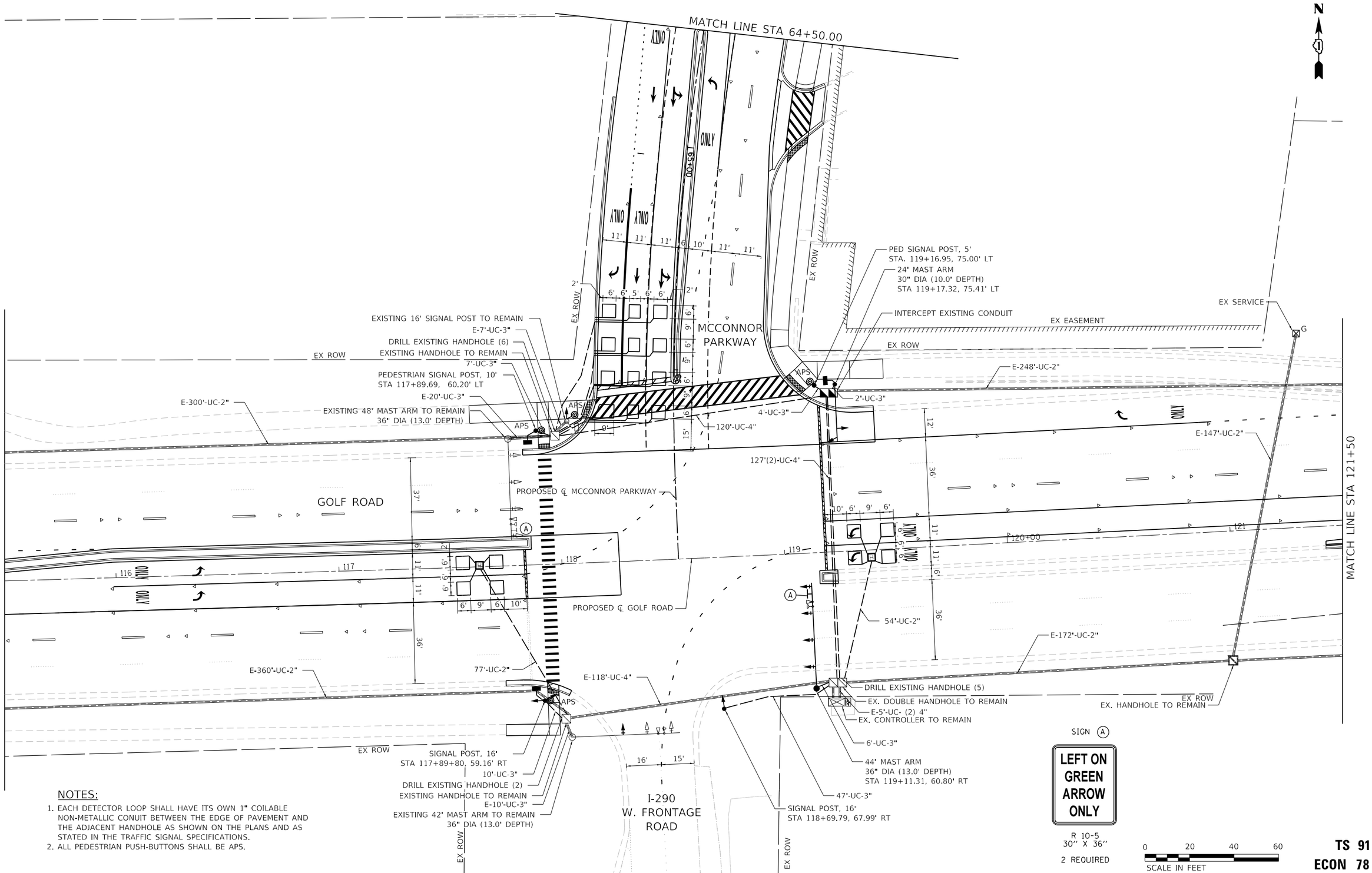

NOTES:

1. EACH DETECTOR LOOP SHALL HAVE ITS OWN 1" COILABLE NON-METALLIC CONUIT BETWEEN THE EDGE OF PAVEMENT AND THE ADJACENT HANDHOLE AS SHOWN ON THE PLANS AND AS STATED IN THE TRAFFIC SIGNAL SPECIFICATIONS.
2. ALL PEDESTRIAN PUSH-BUTTONS SHALL BE APS.

TS 91
ECON 78

MODEL: Default
FILE NAME: F:\861-078 VOS McConnor Parkway\CADD Sheets\Contract 02 CADD Sheets\15_Traffic Signals\22-00142-02-PV_SHT_PR_TRAFFIC SIGNALS.dgn

BLA, Inc.	USER NAME = jrodriguez	DESIGNED - JR	REVISED -
		DRAWN - JR	REVISED -
	PLOT SCALE = 40.0000 ' / in.	CHECKED - GJE	REVISED -
	PLOT DATE = 6/4/2025	DATE - 02/18/2025	REVISED -

STATE OF ILLINOIS
DEPARTMENT OF TRANSPORTATION

MCCONNOR PARKWAY RECONSTRUCTION
TRAFFIC SIGNAL PLAN

SCALE: 1"=20' | SHEET 1 OF 3 SHEETS | STA. 115+50 TO STA. 121+50

F.A.U. RTE.	SECTION	COUNTY	TOTAL SHEETS	SHEET NO.
7008	22-00142-02-PV	COOK	245	164
		CONTRACT NO. 61L38		
		ILLINOIS FED. AID PROJECT		

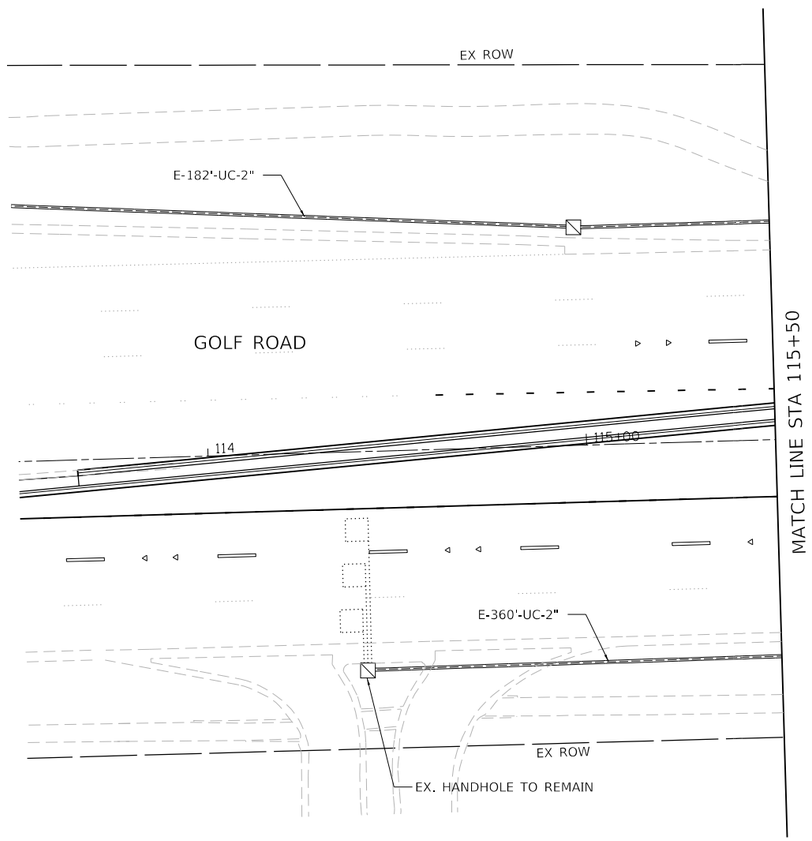

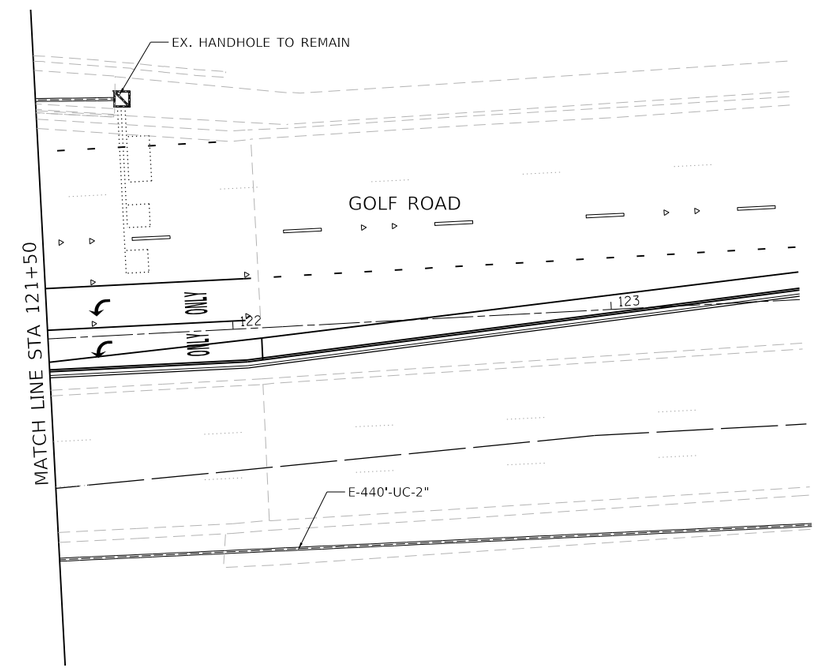

0 20 40 60
SCALE IN FEET

TS 91
ECON 78

MODEL: Default
FILE NAME: F:\861-078 VGS McConnor Parkway\CADD Sheets\Contract 02 CADD Sheets\15 Traffic Signals\22-00142-02-PV_SHT_PR TRAFFIC SIGNALS.dgn

BLA, Inc.

USER NAME = jrodriguez	DESIGNED - JR	REVISED -	
	DRAWN - JR	REVISED -	
PLOT SCALE = 40.0000 ' / in.	CHECKED - GJE	REVISED -	
PLOT DATE = 6/4/2025	DATE - 02/18/2025	REVISED -	

STATE OF ILLINOIS
DEPARTMENT OF TRANSPORTATION

MCCONNOR PARKWAY RECONSTRUCTION
TRAFFIC SIGNAL PLAN

SCALE: 1"=20' | SHEET 2 OF 3 SHEETS | STA. 113+50 TO STA. 123+50

F.A.U. RTE.	SECTION	COUNTY	TOTAL SHEETS	SHEET NO.
7008	22-00142-02-PV	COOK	245	165

CONTRACT NO. 61L38

ILLINOIS FED. AID PROJECT

EXISITING CONTROLLER SEQUENCE

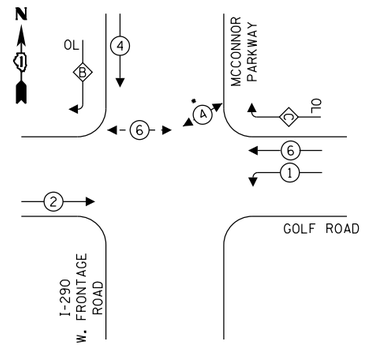

PROPOSED CONTROLLER SEQUENCE

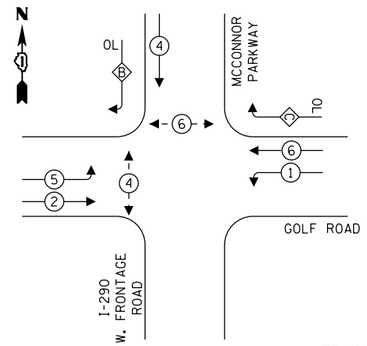

LEGEND:

- PROTECTED PHASE
- PROTECTED/PERMITTED PHASE
- PEDESTRIAN PHASE
- OL OVERLAP

PROPOSED RIGHT TURN OVERLAP PHASE DESIGNATION:

OVERLAP LETTER		PERMISSIVE PHASE		PROTECTED PHASE
B	=	4	+	5
C	=	6	+	4

EXISTING RIGHT TURN OVERLAP PHASE DESIGNATION:

OVERLAP LETTER			
C	=	4	=	6

• OVERLAP C DEACTIVATED WHEN PEDESTRIAN PHASE 4 IS ACTIVATED

EXISTING EMERGENCY VEHICLE PREEMPTION SEQUENCE

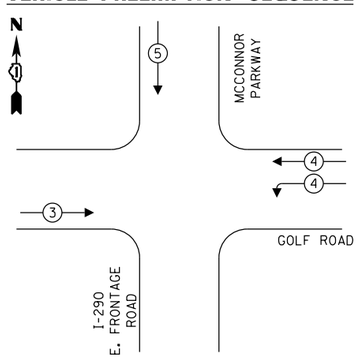

PROPOSED EMERGENCY VEHICLE PREEMPTION SEQUENCE

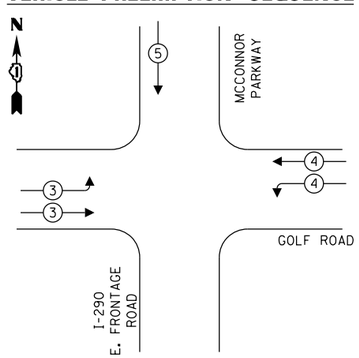

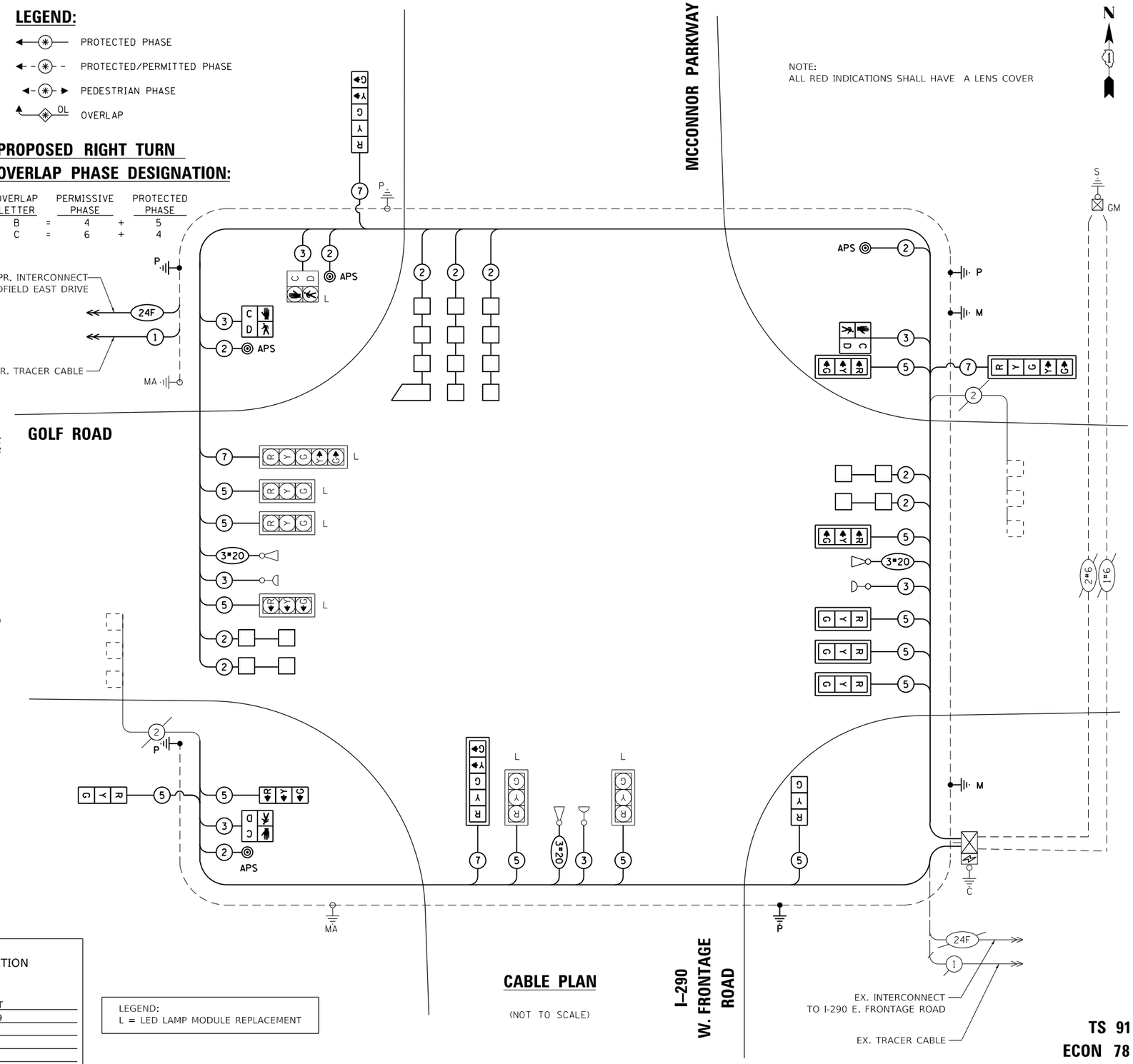

NOTE:
ALL RED INDICATIONS SHALL HAVE A LENS COVER

CABLE PLAN

(NOT TO SCALE)

LEGEND:
L = LED LAMP MODULE REPLACEMENT

TRAFFIC SIGNAL ELECTRICAL SERVICE REQUIREMENTS

EQUIPMENT TYPE	QUANTITY	UNIT WATTAGE	TOTAL WATTAGE
SIGNAL HEAD 1 OR 3-SECTION	13	11	143
4-SECTION	-	14	-
5-SECTION	4	13	52
PROGRAMMABLE 3-SECTION	-	22	-
4-SECTION	-	32	-
5-SECTION	-	28	-
PEDESTRIAN SIGNAL	4	15	60
CONTROLLER	1	150	150
MASTER CONTROLLER	-	100	-
UPS	1	25	25
DETECTION RADAR OR VIDEO	-	20	-
BLANK-OUT SIGN	-	25	-
NETWORK SWITCH II OR III	1	35	35
CELLULAR MODEM	1	15	15
TOTAL UPS SIZING			480
UPS CHARGING	1	225	225
BATTERY HEATER MAT	1	180	180
CABINET HEATER	1	200	200
FLASHER	-	15	-
LED STREET NAME SIGN	-	120	-
LUMINAIRE	-	240	-
TOTAL SERVICE WIRE SIZING			1,085

ENERGY COSTS TO:
ILLINOIS DEPARTMENT OF TRANSPORTATION
201 WEST CENTER COURT
SCHAUMBURG, IL 60196-1096

ENERGY SUPPLY: CONTACT: DAVE SCHACHT
PHONE: (630) 437-2129
COMPANY: COMED
ACCOUNT NUMBER: ---
METER NUMBER: ---

TS 91
ECON 78

MODEL: Default
FILE NAME: F:\861-078 VoS McConnor Parkway\CADD Sheets\Contract 02 CADD Sheets\15_Traffic Sign\22-00142-02-PV_SHT PR TRAFFIC SIGNAL5.dgn

BLA, Inc.

USER NAME = jrodriguez	DESIGNED - JR	REVISED -
	DRAWN - JR	REVISED -
PLOT SCALE = 40.0000 ' / in.	CHECKED - GJE	REVISED -
PLOT DATE = 6/4/2025	DATE - 02/18/2025	REVISED -

STATE OF ILLINOIS
DEPARTMENT OF TRANSPORTATION

MCCONNOR PARKWAY RECONSTRUCTION
CABLE PLAN AND PHASE DESIGNATION DIAGRAM

SCALE: 1"=20' | SHEET 3 OF 3 SHEETS | STA. N/A TO STA. N/A

F.A.U. RTE.	SECTION	COUNTY	TOTAL SHEETS	SHEET NO.
7008	22-00142-02-PV	COOK	245	166
		CONTRACT NO. 61L38		
		ILLINOIS FED. AID PROJECT		

SIGN PANEL – TYPE 2

ALL DIMENSIONS ARE IN INCHES UNLESS NOTED OTHERWISE

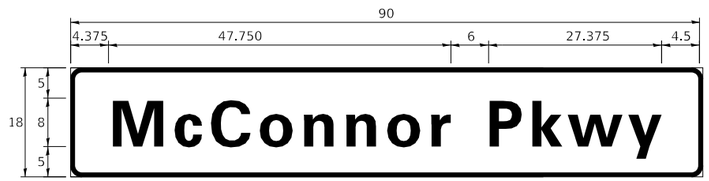

DESIGN SERIES	AREA (SQ FT)	SIGN PANEL TYPE	SHEETING TYPE	QTY. REQUIRED
D	11.25	2	ZZ	1

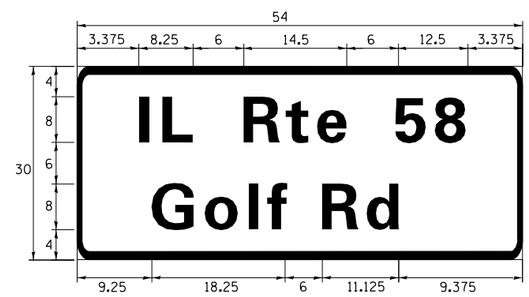

DESIGN SERIES	AREA (SQ FT)	SIGN PANEL TYPE	SHEETING TYPE	QTY. REQUIRED
D	11.25	2	ZZ	1

SCHEDULE OF QUANTITIES

	ITEM	UNIT	TOTAL QUANTITY
	SIGN PANEL - TYPE 2	SQ FT	23
	UNDERGROUND CONDUIT, GALVANIZED STEEL, 2" DIA.	FOOT	131
	UNDERGROUND CONDUIT, GALVANIZED STEEL, 3" DIA.	FOOT	76
	UNDERGROUND CONDUIT, GALVANIZED STEEL, 4" DIA.	FOOT	374
	HEAVY DUTY HANDHOLE	EACH	2
	DOUBLE HANDHOLE	EACH	1
	MAINTENANCE OF EXISTING TRAFFIC SIGNAL INSTALLATION	EACH	1
	ELECTRIC CABLE IN CONDUIT, SIGNAL NO. 14 2C	FOOT	923
	ELECTRIC CABLE IN CONDUIT, SIGNAL NO. 14 3C	FOOT	1421
	ELECTRIC CABLE IN CONDUIT, SIGNAL NO. 14 5C	FOOT	1945
	ELECTRIC CABLE IN CONDUIT, SIGNAL NO. 14 7C	FOOT	1028
	ELECTRIC CABLE IN CONDUIT, LEAD-IN, NO. 14 1 PAIR	FOOT	587
	ELECTRIC CABLE IN CONDUIT, EQUIPMENT GROUNDING CONDUCTOR, NO. 6 1C	FOOT	578
	TRAFFIC SIGNAL POST, 16 FT.	EACH	2
	STEEL MAST ARM ASSEMBLY AND POLE, 24 FT.	EACH	1
	STEEL MAST ARM ASSEMBLY AND POLE, 44 FT.	EACH	1
	CONCRETE FOUNDATION, TYPE A	FOOT	8
	CONCRETE FOUNDATION, TYPE E 30-INCH DIAMETER	FOOT	10
	CONCRETE FOUNDATION, TYPE E 36-INCH DIAMETER	FOOT	13
	DRILL EXISTING HANDHOLE	EACH	13
	SIGNAL HEAD, LED, 1-FACE, 3-SECTION, MAST-ARM MOUNTED	EACH	5
	SIGNAL HEAD, LED, 1-FACE, 3-SECTION, BRACKET MOUNTED	EACH	3
	SIGNAL HEAD, LED, 1-FACE, 5-SECTION, BRACKET MOUNTED	EACH	1
	SIGNAL HEAD, LED, 1-FACE, 5-SECTION, MAST-ARM MOUNTED	EACH	2
	PEDESTRIAN SIGNAL HEAD, LED, 1-FACE, BRACKET MOUNTED WITH COUNTDOWN TIMER	EACH	3
	TRAFFIC SIGNAL BACKPLATE, LOUVERED, FORMED PLASTIC	EACH	7
	DETECTOR LOOP, TYPE I	FOOT	716
	TEMPORARY TRAFFIC SIGNAL INSTALLATION	EACH	2
	RELOCATE EXISTING SIGNAL HEAD	EACH	2
*	RELOCATE EXISTING EMERGENCY VEHICLE PRIORITY SYSTEM, DETECTOR UNIT	EACH	2
	MODIFY EXISTING CONTROLLER CABINET	EACH	1
	REMOVE EXISTING TRAFFIC SIGNAL EQUIPMENT	EACH	1
	REMOVE EXISTING HANDHOLE	EACH	3
	REMOVE EXISTING CONCRETE FOUNDATION	EACH	6
*	EMERGENCY VEHICLE PRIORITY SYSTEM LINE SENSOR CABLE, NO. 20 3/C	FOOT	664
	LED LAMP MODULE REPLACEMENT	EACH	23
	PEDESTRIAN SIGNAL POST, 10 FT.	EACH	1
	PEDESTRIAN SIGNAL POST, 5 FT.	EACH	1
	INTERCEPT EXISTING CONDUIT	EACH	1
	ACCESSIBLE PEDESTRIAN SIGNALS	EACH	4
	CONCRETE FOUNDATION, TYPE A 12-INCH DIAMETER	FOOT	8
	LED SIGNAL FACE, LENS COVER	EACH	11

*100% OF THE COST SHALL BE PAID FOR BY THE VILLAGE OF SCHAUMBURG

TS 91
ECON 78

MODEL: McConnor Pkwy
FILE NAME: F:\861-078 VOS McConnor Parkway\CADD Sheets\Contract 02 CADD Sheets\15_Traffic Signals\22_00142_02_PV_SHT_Signal_SOQ.dgn

BLA, Inc.

USER NAME = jrodriguez	DESIGNED - JR	REVISED -	
	DRAWN - JR	REVISED -	
PLOT SCALE = 40.0000 ' / in.	CHECKED - GJE	REVISED -	
PLOT DATE = 6/4/2025	DATE - 02/18/2025	REVISED -	

STATE OF ILLINOIS
DEPARTMENT OF TRANSPORTATION

MCCONNOR PARKWAY RECONSTRUCTION
MAST ARM MOUNTED STREET NAMES SIGNS AND SCHDULE OF QUANTITIES

SCALE: 1"=20' | SHEET 1 OF 1 SHEETS | STA. N/A TO STA. N/A

F.A.U. RTE.	SECTION	COUNTY	TOTAL SHEETS	SHEET NO.
7008	22-00142-02-PV	COOK	245	167

CONTRACT NO. 61L38

ILLINOIS FED. AID PROJECT

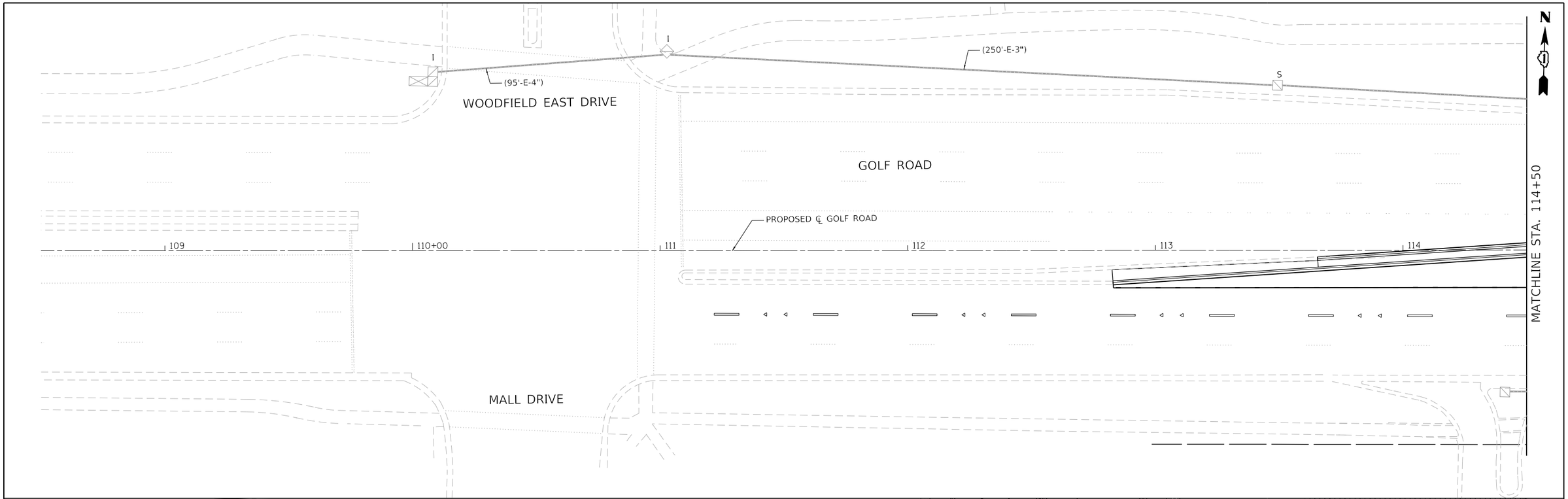

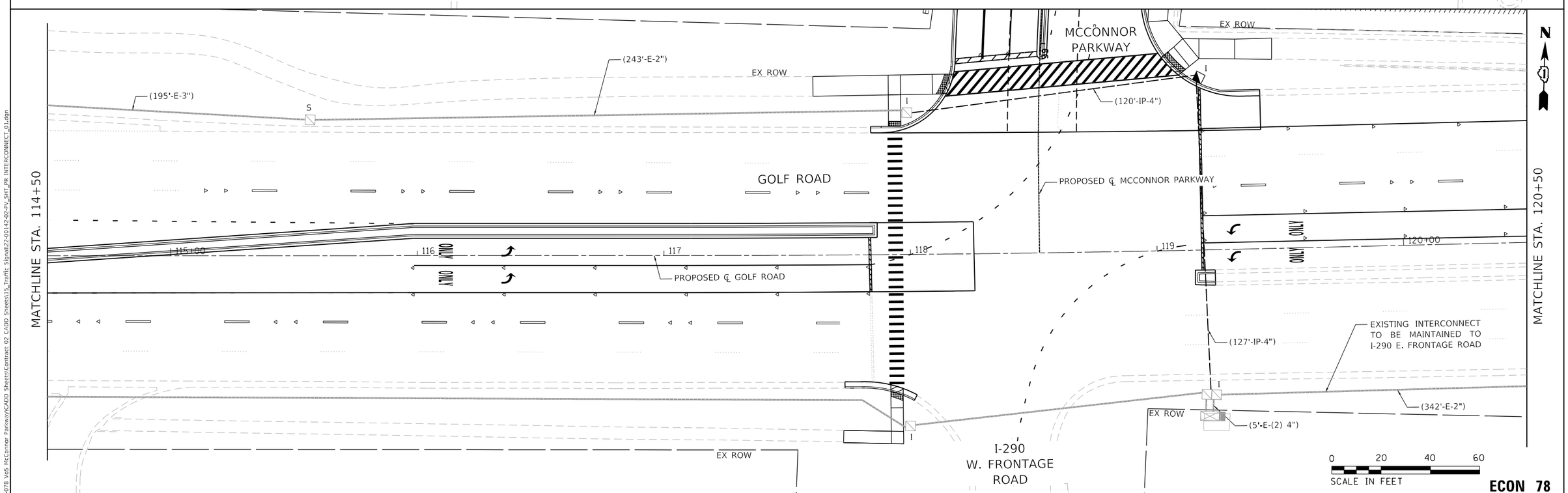

ECON 78

MODEL: Default
FILE NAME: F:\8081-078 VDS McConnor Parkway\CADD Sheets\Contract 02 CADD Sheets\15_Traffic Signal\22-00142-02-PV_SHT_PR INTERCONNECT_01.dgn

BLA, Inc.	USER NAME = jrodriguez	DESIGNED - JR	REVISED -
		DRAWN - JR	REVISED -
	PLOT SCALE = 40.0000 ' / in.	CHECKED - GJE	REVISED -
	PLOT DATE = 6/4/2025	DATE - 02/18/2025	REVISED -

STATE OF ILLINOIS
DEPARTMENT OF TRANSPORTATION

MCCONNOR PARKWAY RECONSTRUCTION
PROPOSED INTERCONNECT PLANS

SCALE: 1"=20' | SHEET 1 OF 3 SHEETS | STA. 109+50 TO STA. 120+50

F.A.U. RTE.	SECTION	COUNTY	TOTAL SHEETS	SHEET NO.
7008	22-00142-02-PV	COOK	245	168
		CONTRACT NO. 61L38		
		ILLINOIS FED. AID PROJECT		

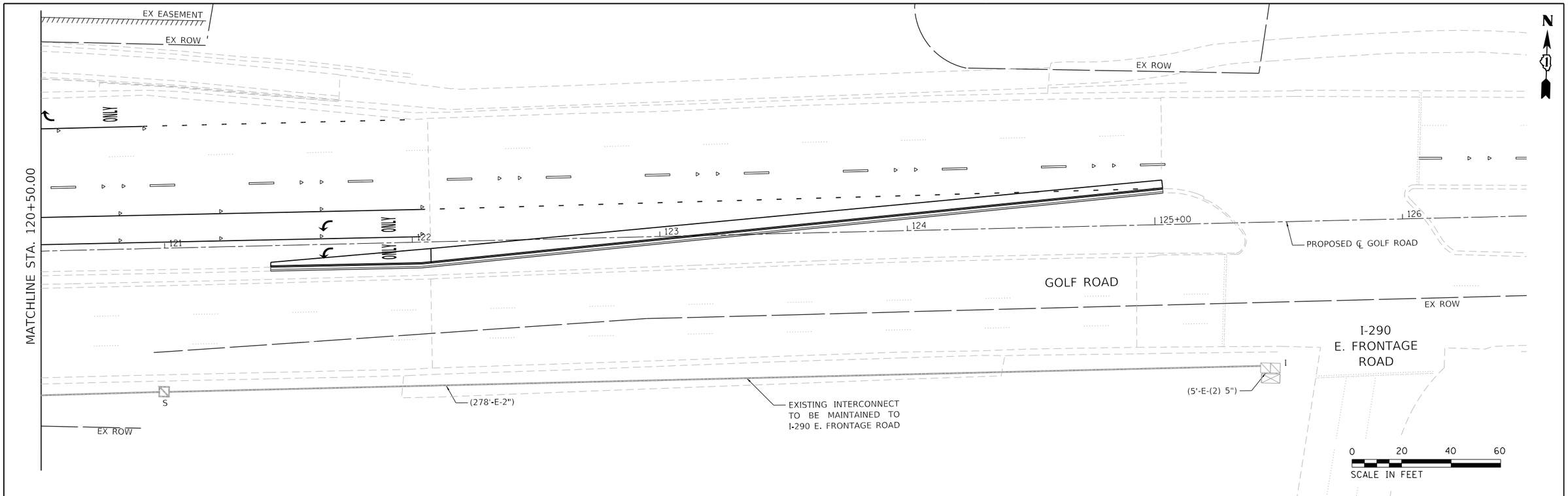

ECON 78

MODEL: Default
FILE NAME: F:\0891-078 VOS McConnor Parkway\CADD Sheets\Contract 02 CADD Sheets\15_Traffic Signal\22-00142-02-PV_SHT_PR INTERCONNECT_02.dgn

BLA, Inc.	USER NAME = jrodriguez	DESIGNED - JR	REVISED -	STATE OF ILLINOIS DEPARTMENT OF TRANSPORTATION	MCCONNOR PARKWAY RECONSTRUCTION PROPOSED INTERCONNECT PLANS	F.A.U. RTE.	SECTION	COUNTY	TOTAL SHEETS / SHEET NO.
		DRAWN - JR	REVISED -			7008	22-00142-02-PV	COOK	245 / 169
	PLOT SCALE = 40.0000 ' / in.	CHECKED - GJE	REVISED -					CONTRACT NO. 61L38	
	PLOT DATE = 6/4/2025	DATE - 02/18/2025	REVISED -		SCALE: 1"=20' SHEET 2 OF 3 SHEETS STA. 120+50.00 TO STA. 125+50.00			ILLINOIS FED. AID PROJECT	

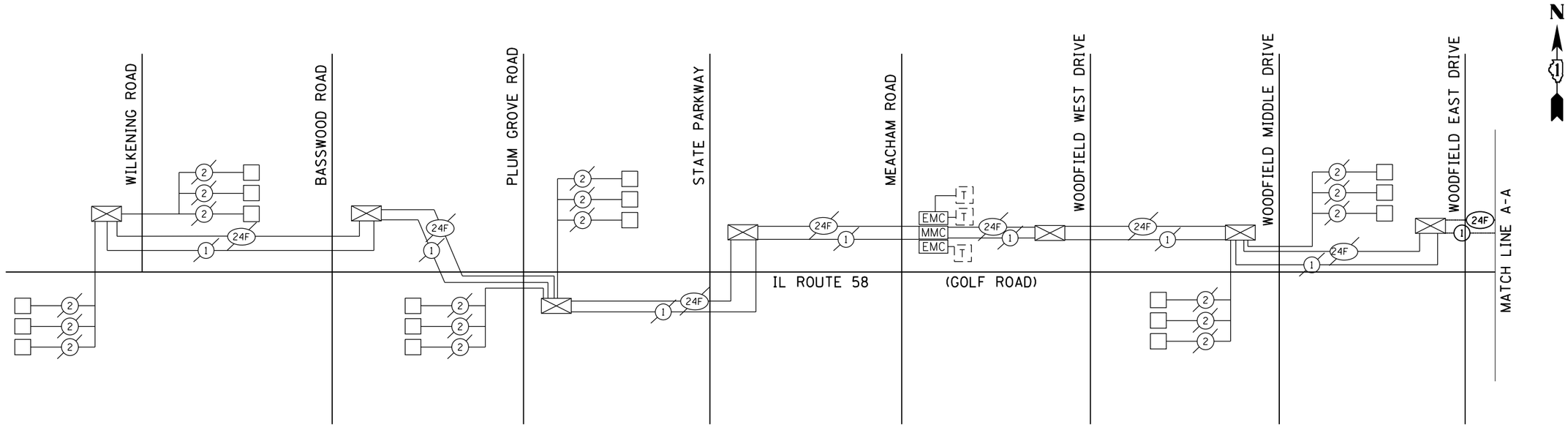

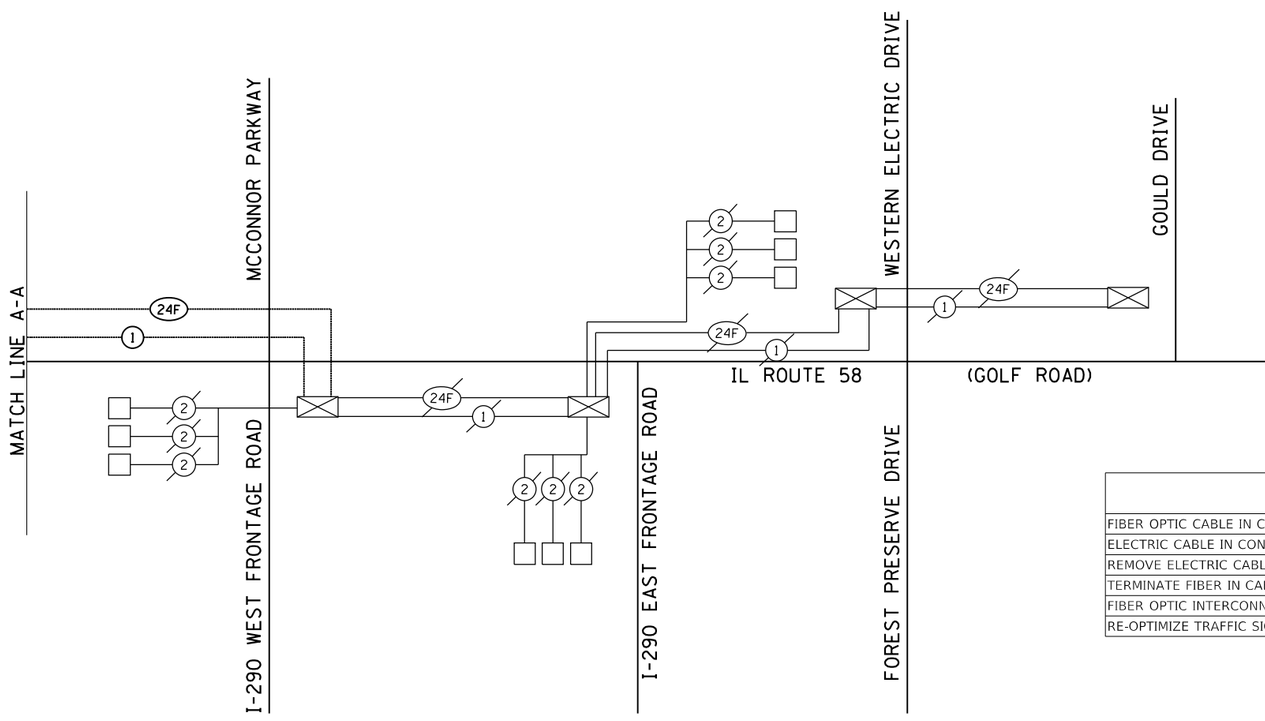

ITEM	UNIT	TOTAL QUANTITY
FIBER OPTIC CABLE IN CONDUIT, NO. 62.5/125, MM12F SM12F	FOOT	1101
ELECTRIC CABLE IN CONDUIT, TRACER, NO. 14 1C	FOOT	247
REMOVE ELECTRIC CABLE FROM CONDUIT	FOOT	1101
TERMINATE FIBER IN CABINET	EACH	2
FIBER OPTIC INTERCONNECT CENTER, 24 PORT	EACH	1
RE-OPTIMIZE TRAFFIC SIGNAL SYSTEM LEVEL 2	EACH	1

MODEL: Default
FILE NAME: F:\861-078 VoS McConnor Parkway\CADD Sheets\Contract 02 CADD Sheets\15_Traffic Signals\22-00142-02-PV_SHT_PR INTERCONNECT SCHEMATIC.dgn

BLA, Inc.

USER NAME = jrodriguez	DESIGNED - JR	REVISED -
	DRAWN - JR	REVISED -
PLOT SCALE = 40.0000 ' / in.	CHECKED - GJE	REVISED -
PLOT DATE = 6/4/2025	DATE - 02/18/2025	REVISED -

STATE OF ILLINOIS
DEPARTMENT OF TRANSPORTATION

MCCONNOR PARKWAY RECONSTRUCTION
PROPOSED INTERCONNECT SCHEMATIC

SCALE: 1"=20' | SHEET 3 OF 3 SHEETS | STA. N/A TO STA. N/A

F.A.U. RTE.	SECTION	COUNTY	TOTAL SHEETS	SHEET NO.
7008	22-00142-02-PV	COOK	245	170

CONTRACT NO. 61L38

ILLINOIS FED. AID PROJECT

GENERAL NOTES

1. THIS PROJECT INCLUDES THE RECONSTRUCTION OF MCCONNER PARKWAY, BETWEEN ROOSEVELT BLVD. AND GOLF ROAD. EXISTING MEDIAN LIGHTING UNITS THAT WILL BE IN CONFLICT WITH THE IMPROVEMENTS AND SHALL BE REMOVED AND RELOCATED. TEMPORARY LIGHTING SHALL BE PROVIDED DURING THE CONSTRUCTION STAGES UNTIL THE RELOCATED LIGHTING IS INSTALLED AND OPERATIONAL. THE LIGHTING IS OWNED AND MAINTAINED BY THE VILLAGE OF SCHUMBURG AND SHALL BE CONNECTED TO THE EXISTING LIGHTING CONTROLLERS.
2. THE QUANTITIES OF RACEWAYS WHEREVER INDICATED ON THESE PLANS ARE APPROXIMATIONS ONLY. THE CONTRACTOR SHALL FIELD VERIFY ALL LENGTHS AND SHALL INSTALL RACEWAYS IN COMPLETE COMPLIANCE WITH THE SPECIFIED REQUIREMENTS.
3. THE CONTRACTOR SHALL NOTIFY J.U.L.I.E. TO LOCATE AND MARK/STAKE ALL UNDERGROUND UTILITIES.
4. THE CONTRACTOR SHALL VERIFY LOCATIONS OF UNDERGROUND/OVERHEAD UTILITIES AND TREES PRIOR TO INSTALLATION OF LIGHT POLES AND CONDUITS. IF THERE IS A CONFLICT WITH THE LIGHT POLES/CONDUITS AS SHOWN ON PLANS. THE CONTRACTOR SHALL SUGGEST ALTERNATIVE LOCATIONS AND COORDINATE WITH THE ENGINEER PRIOR TO PERFORMING WORK.
5. TRENCHES FOR LIGHTING RACEWAYS SHALL HAVE A MINIMUM DEPTH OF 30".
6. LIGHTING SYSTEM INSTALLATION SHALL CONFROM TO THE LATEST IDOT STANDARDS, NEC AND LOCAL STANDARDS.
7. ALL ELECTRICAL EQUIPMENT AND PRODUCTS SHALL BE UL LISTED AND LABELED.
8. GROUND RODS SHALL BE INSTALLED AT EACH RELOCATED LIGHTING UNIT.
9. THE CONTRACTOR SHALL TAKE CARE WHEN INSTALLING UNIT DUCT TO AVOID CONFLICTS WITH EXISTING UNDERGROUND UTILITIES AND TREES ROOTS. THE CONTRACTOR SHALL BE RESPONSIBLE FOR ANY DAMAGE AS DETERMINED BY THE ENGINEER.

BILL OF MATERIALS

DESCIPTION	UNIT	QUANTITY
UNDERGROUND CONDUIT, GALVANIZED STEEL, 4" DIA.	FOOT	149
UNIT DUCT, 600V, 2-1C NO.2, 1/C NO.4 GROUND, (XLP-TYPE USE), 1 1/2" DIA. POLYETHYLENE	FOOT	1413
AERIAL CABLE, 2-1/C NO. 2 WITH MESSENGER WIRE	FOOT	3392
LIGHT POLE, WOOD, 60 FOOT, CLASS 4, WITH 15FT MAST ARM	EACH	12
LIGHT POLE FOUNDATION, METAL, 11 1/2" BOLT CIRCLE, 8 5/8" X 6'	EACH	6
BREAKAWAY DEVICE, TRANSFORMER BASE, 11.5 INCH BOLT CIRCLE	EACH	6
REMOVAL OF TEMPORARY LIGHTING UNIT	EACH	12
REMOVAL OF LIGHTING UNIT, SALVAGE	EACH	6
REMOVAL OF POLE FOUNDATION	EACH	6
REMOVE EXISTING HANDHOLE	EACH	2
TEMPORARY LUMINAIRE, LED, ROADWAY, OUTPUT DESIGNATION G	EACH	12
TEMPORARY WOOD POLE, 60 FT., CLASS 4	EACH	9
RELOCATE LIGHTING UNITS AND POLES	EACH	6
MAINTENANCE OF LIGHTING SYSTEM	CAL MO	18

LEGEND

- (E)—○—(E) EXISTING LIGHTING UNIT TO REMAIN
- (RR)—○—(RR) EXISTING LIGHTING UNIT TO BE REMOVED AND RELOCATED
- (RL)—○—(RL) RELOCATED LIGHTING UNIT
- ○—(T) TEMPORARY WOOD POLE, 50 FT. MH, 15 FT. MAST ARM WITH LED LUMINAIRE, OUTPUT DESIGNATION G
- EXISTING LIGHTING CONTROLLER TO REMAIN
- UNDERGROUND CONDUIT GALVANIZED STEEL 4" DIA.
- R EXISTING HANDHOLE TO BE REMOVED
- UNIT DUCT, 600V, 2-1C NO.2, 1/C NO.4 GROUND, (XLP-TYPE USE), 1 1/2" DIA. POLYETHYLENE
- A/C AERIAL CABLE, 2-1/C NO. 2 WITH MESSENGER WIRE
- TEMPORARY WOOD POLE, 60 FT., CLASS 4

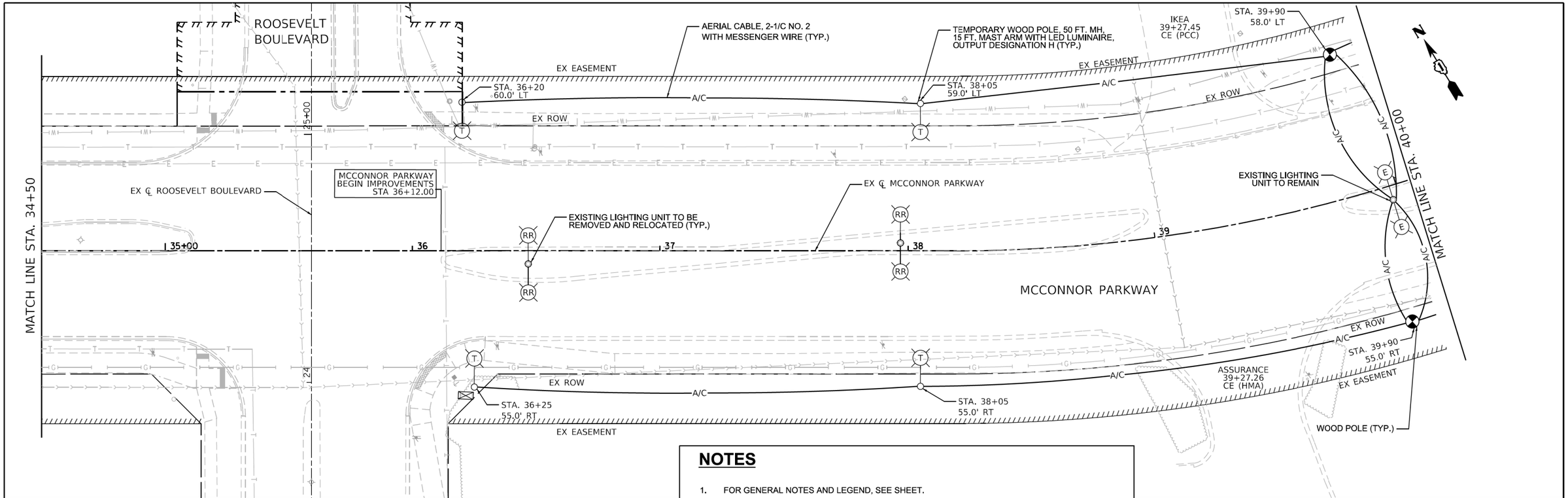

NOTES

1. FOR GENERAL NOTES AND LEGEND, SEE SHEET.
2. EXISITNG LIGHTING TO BE REMOVED SHALL REMAIN OPERATIONAL UNTIL THE TEMPORARY LIGHING IS INSTALLED AND OPERATIONAL. TRANSITION OF EXISITNG TO TEMPORARY LIGHTING SHALL BE COORDINATED AND COMPLETED ON THE SAME DAY WITHOUT ANY INTERRUPTION OF OPERATION FOR THAT EVENING.

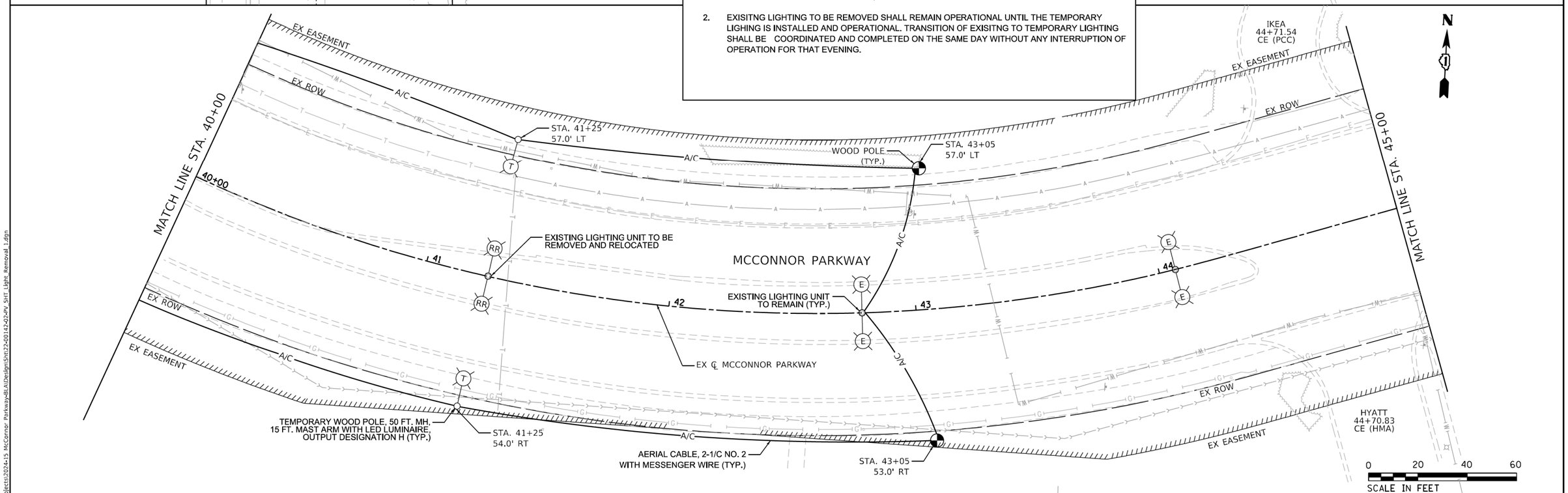

MODEL: Default
FILE NAME: F:\Projects\2024-15 McConnor Parkway\BLA\Design\Sht\22-00142-02-PV_Sht_Light_Removal_1.dgn

AMES Engineering, Inc. CONSULTING ENGINEERS 6330 Belmont Road, Suite 4B Downers Grove, IL 60516	USER NAME = Mhyder	DESIGNED - MH	REVISED -	**STATE OF ILLINOIS DEPARTMENT OF TRANSPORTATION**	**MCCONNOR PARKWAY – ROOSEVELT BLVD. TO GOLF ROAD LIGHTING REMOVAL PLANS**
		DRAWN - MD	REVISED -		
	PLOT SCALE = 40.0000 ' / in.	CHECKED - BL	REVISED -		
	PLOT DATE = 2/13/2025	DATE - 01/13/2025	REVISED -		SCALE: 1"=20' SHEET 1 OF 4 SHEETS STA. 34+50 TO STA. 45+00

F.A.U. RTE.	SECTION	COUNTY	TOTAL SHEETS	SHEET NO.
7008	22-00142-02-PV	COOK	245	172
		CONTRACT NO. 61L38		
		ILLINOIS FED. AID PROJECT		

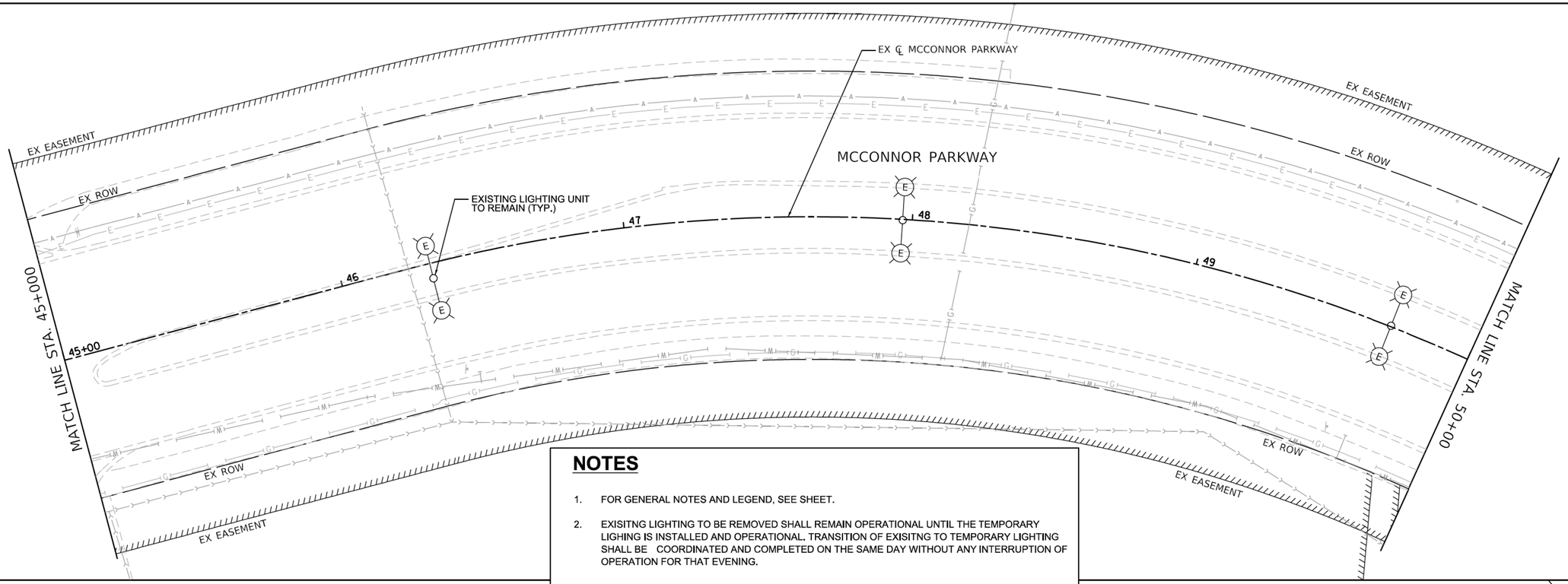

NOTES

1. FOR GENERAL NOTES AND LEGEND, SEE SHEET.
2. EXISITNG LIGHTING TO BE REMOVED SHALL REMAIN OPERATIONAL UNTIL THE TEMPORARY LIGHING IS INSTALLED AND OPERATIONAL. TRANSITION OF EXISITNG TO TEMPORARY LIGHTING SHALL BE COORDINATED AND COMPLETED ON THE SAME DAY WITHOUT ANY INTERRUPTION OF OPERATION FOR THAT EVENING.

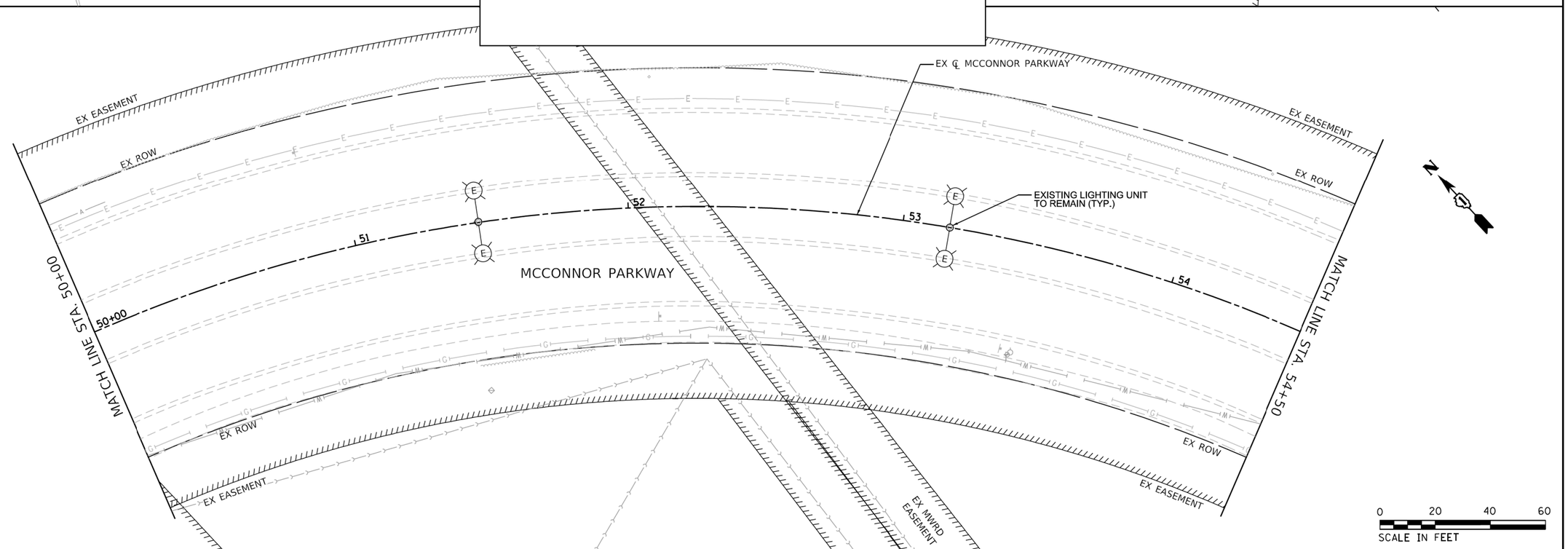

MODEL: Default
FILE NAME: F:\Projects\2024-15 McConnor Parkway-BLA\Design\Sht\22-00142-02-PV_Sht_Light_Removal_2.dgn

AMES Engineering, Inc. CONSULTING ENGINEERS 6330 Belmont Road, Suite 4B Downers Grove, IL 60516	USER NAME = Mhyder	DESIGNED - MH	REVISED -	**STATE OF ILLINOIS DEPARTMENT OF TRANSPORTATION**	**MCCONNOR PARKWAY – ROOSEVELT BLVD. TO GOLF ROAD LIGHTING REMOVAL PLANS**	F.A.U. RTE.	SECTION	COUNTY	TOTAL SHEETS	SHEET NO.
		DRAWN - MD	REVISED -			7008	22-00142-02-PV	COOK	245	173
	PLOT SCALE = 40.0000 ' / in.	CHECKED - BL	REVISED -					CONTRACT NO. 61L38		
	PLOT DATE = 2/13/2025	DATE - 01/13/2025	REVISED -		SCALE: 1"=20' SHEET 2 OF 4 SHEETS STA. 45+00 TO STA. 54+50			ILLINOIS FED. AID PROJECT		

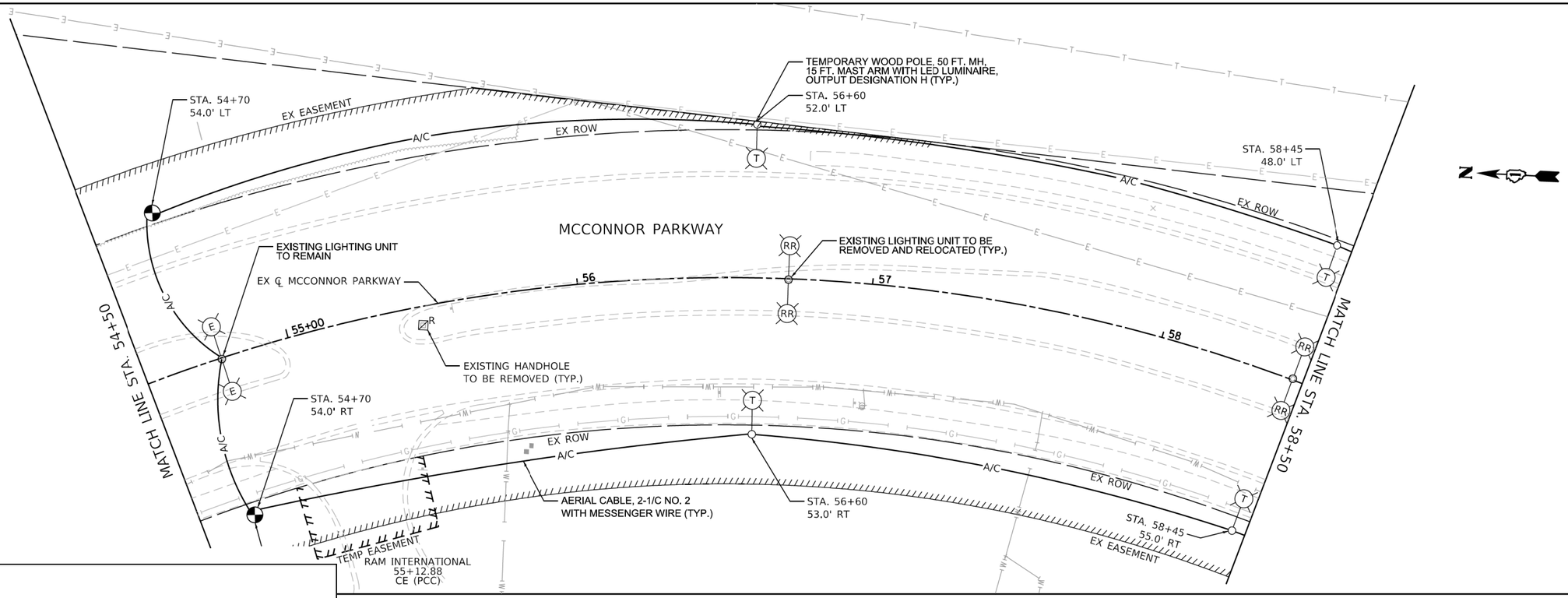

NOTES

1. FOR GENERAL NOTES AND LEGEND, SEE SHEET.
2. EXISITNG LIGHTING TO BE REMOVED SHALL REMAIN OPERATIONAL UNTIL THE TEMPORARY LIGHING IS INSTALLED AND OPERATIONAL. TRANSITION OF EXISITNG TO TEMPORARY LIGHTING SHALL BE COORDINATED AND COMPLETED ON THE SAME DAY WITHOUT ANY INTERRUPTION OF OPERATION FOR THAT EVENING.

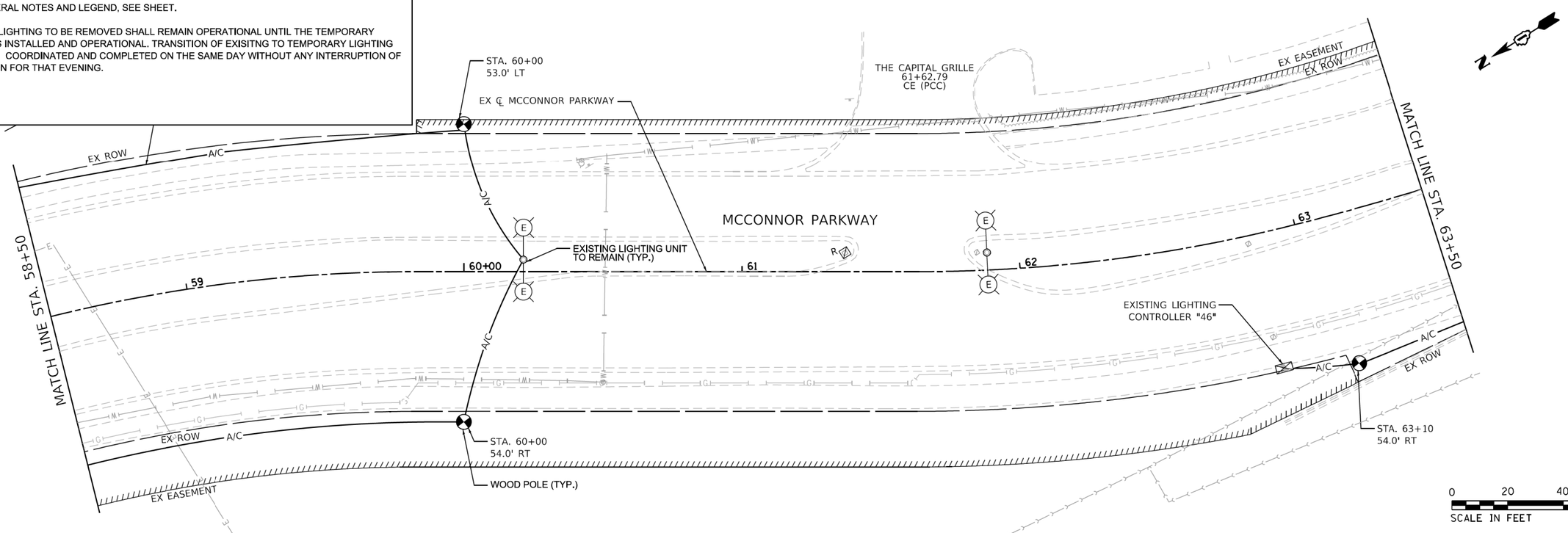

AMES Engineering, Inc. CONSULTING ENGINEERS 6330 Belmont Road, Suite 4B Downers Grove, IL 60516	USER NAME = Mhyder	DESIGNED - MH	REVISED -	STATE OF ILLINOIS DEPARTMENT OF TRANSPORTATION	MCCONNOR PARKWAY – ROOSEVELT BLVD. TO GOLF ROAD LIGHTING REMOVAL PLANS	F.A.U. RTE.	SECTION	COUNTY	TOTAL SHEETS / SHEET NO.
		DRAWN - MD	REVISED -			7008	22-00142-02-PV	COOK	245 / 174
	PLOT SCALE = 40.0000 ' / in.	CHECKED - BL	REVISED -					CONTRACT NO. 61L38	
	PLOT DATE = 2/13/2025	DATE - 01/13/2025	REVISED -		SCALE: 1" = 20' SHEET 3 OF 4 SHEETS STA. 54+50 TO STA. 63+50			ILLINOIS FED. AID PROJECT	

MODEL: Default
FILE NAME: P:\Projects\2024-15 McConnor Parkway-BLA\Design\Sht\22-00142-02-PV_SHT_Light_Removal_3.dgn

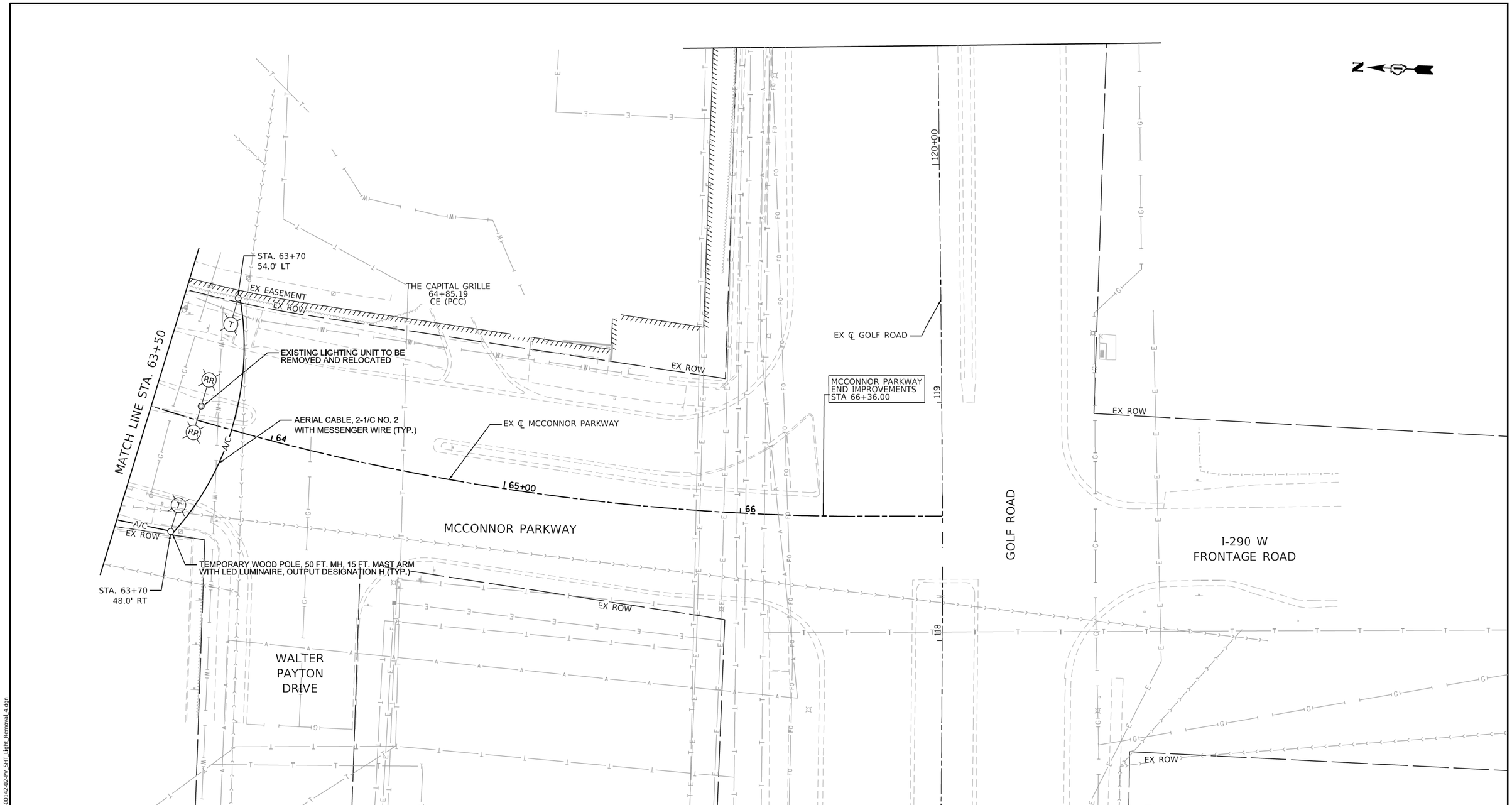

NOTES

1. FOR GENERAL NOTES AND LEGEND, SEE SHEET.
2. EXISITNG LIGHTING TO BE REMOVED SHALL REMAIN OPERATIONAL UNTIL THE TEMPORARY LIGHING IS INSTALLED AND OPERATIONAL. TRANSITION OF EXISITNG TO TEMPORARY LIGHTING SHALL BE COORDINATED AND COMPLETED ON THE SAME DAY WITHOUT ANY INTERRUPTION OF OPERATION FOR THAT EVENING.

AMES Engineering, Inc.
CONSULTING ENGINEERS
6330 Belmont Road, Suite 4B
Downers Grove, IL 60516

USER NAME = Mhyder	DESIGNED - MH	REVISED -	
	DRAWN - MD	REVISED -	
PLOT SCALE = 40.0000 ' / in.	CHECKED - BL	REVISED -	
PLOT DATE = 2/13/2025	DATE - 01/13/2025	REVISED -	

STATE OF ILLINOIS
DEPARTMENT OF TRANSPORTATION

MCCONNOR PARKWAY – ROOSEVELT BLVD. TO GOLF ROAD
LIGHTING REMOVAL PLANS

SCALE: 1" = 20' | SHEET 4 OF 4 SHEETS | STA. 63+50 TO STA. 66+85

F.A.U. RTE.	SECTION	COUNTY	TOTAL SHEETS	SHEET NO.
7008	22-00142-02-PV	COOK	245	175
		CONTRACT NO. 61L38		
		ILLINOIS FED. AID PROJECT		

MODEL: Default
FILE NAME: F:\Projects\2024-15 McConnor Parkway\BLA\Design\Sht\22-00142-02-PV_SHT_Light Removal 4.dgn

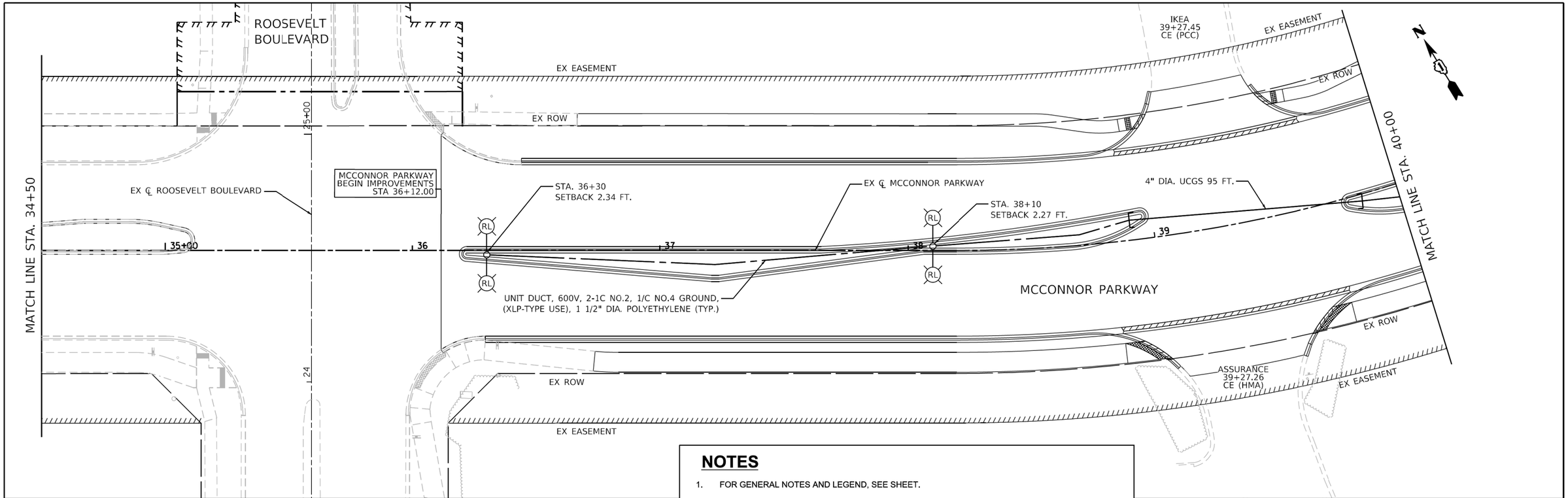

NOTES

1. FOR GENERAL NOTES AND LEGEND, SEE SHEET.
2. LIGHT POLE SETBACKS ARE MEASURED FROM FACE OF CURB TO CENTER OF THE POLE.
3. UCGS STANDS FOR UNDERGROUND CONDUIT, GALVANIZED STEEL.
4. TEMPORARY LIGHTING SHALL REMAIN UNTIL THE RELOCATED LIGHT POLES ARE INSTALLED AND OPERATIONAL. TRANSITION OF TEMPORARY TO RELOCATED LIGHTING SHALL BE COORDINATED AND COMPLETED ON THE SAME DAY WITHOUT ANY INTERRUPTION OF OPERATION FOR THE SAME EVENING.

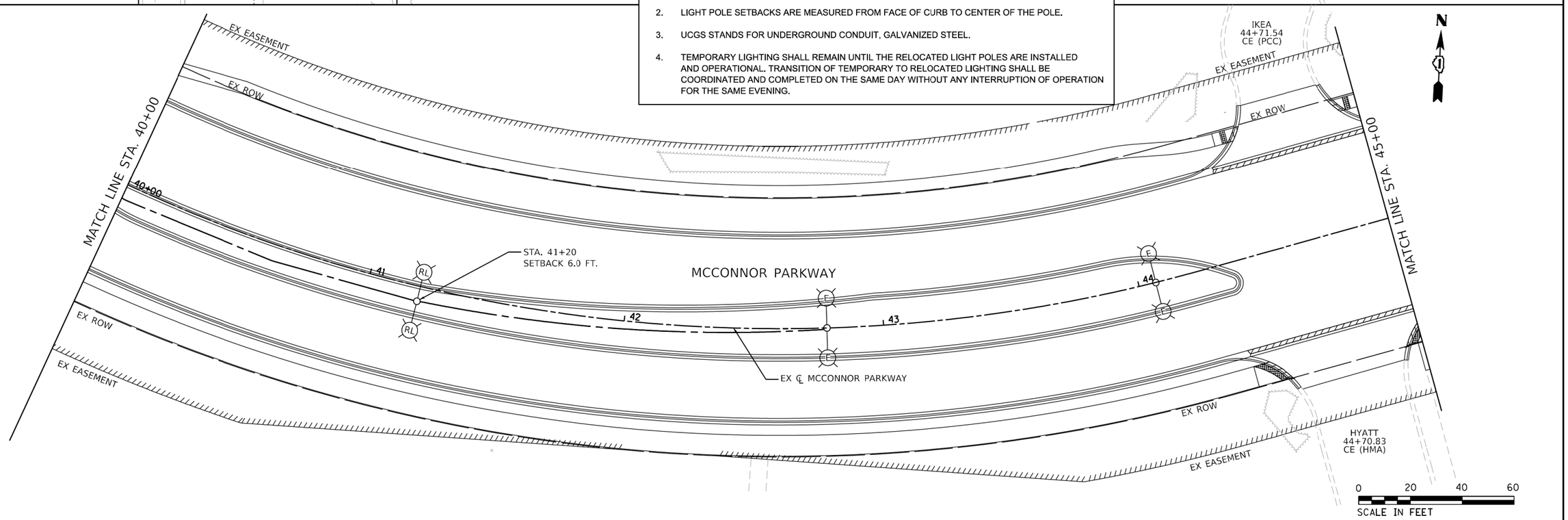

AMES Engineering, Inc. CONSULTING ENGINEERS 6330 Belmont Road, Suite 4B Downers Grove, IL 60516	USER NAME = Mhyder	DESIGNED - MH	REVISED -	**STATE OF ILLINOIS DEPARTMENT OF TRANSPORTATION**	**MCCONNOR PARKWAY – ROOSEVELT BLVD. TO GOLF ROAD LIGHTING PROPOSED PLANS**
		DRAWN - MD	REVISED -		
	PLOT SCALE = 40.0000 ' / in.	CHECKED - BL	REVISED -		
	PLOT DATE = 2/13/2025	DATE - 01/13/2025	REVISED -		SCALE: 1"=20' SHEET 1 OF 4 SHEETS STA. 34+50 TO STA. 45+00

F.A.U. RTE.	SECTION	COUNTY	TOTAL SHEETS	SHEET NO.
7008	22-00142-02-PV	COOK	245	176
		CONTRACT NO. 61L38		
		ILLINOIS FED. AID PROJECT		

MODEL: Default
FILE NAME: P:\Projects\2024+15 McConnor Parkway-BL&I\Design\Sht\22-00142-02-PV SHT_Light_proposed_1.dgn

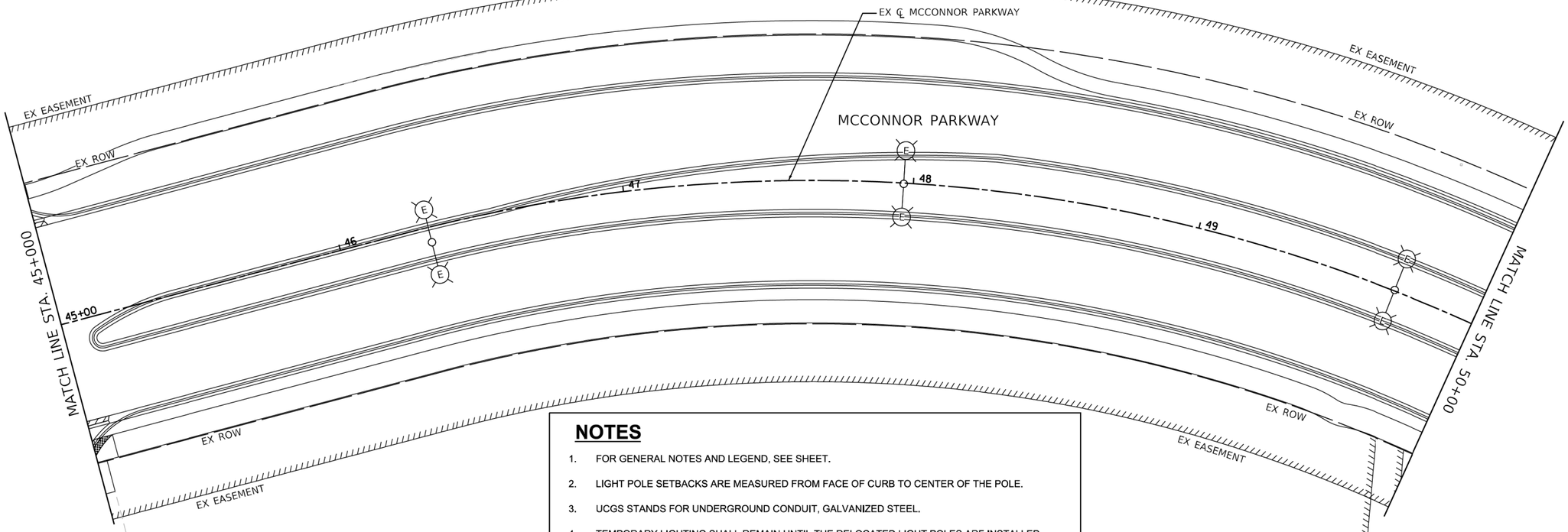

NOTES

1. FOR GENERAL NOTES AND LEGEND, SEE SHEET.
2. LIGHT POLE SETBACKS ARE MEASURED FROM FACE OF CURB TO CENTER OF THE POLE.
3. UCGS STANDS FOR UNDERGROUND CONDUIT, GALVANIZED STEEL.
4. TEMPORARY LIGHTING SHALL REMAIN UNTIL THE RELOCATED LIGHT POLES ARE INSTALLED AND OPERATIONAL. TRANSITION OF TEMPORARY TO RELOCATED LIGHTING SHALL BE COORDINATED AND COMPLETED ON THE SAME DAY WITHOUT ANY INTERRUPTION OF OPERATION FOR THE SAME EVENING.

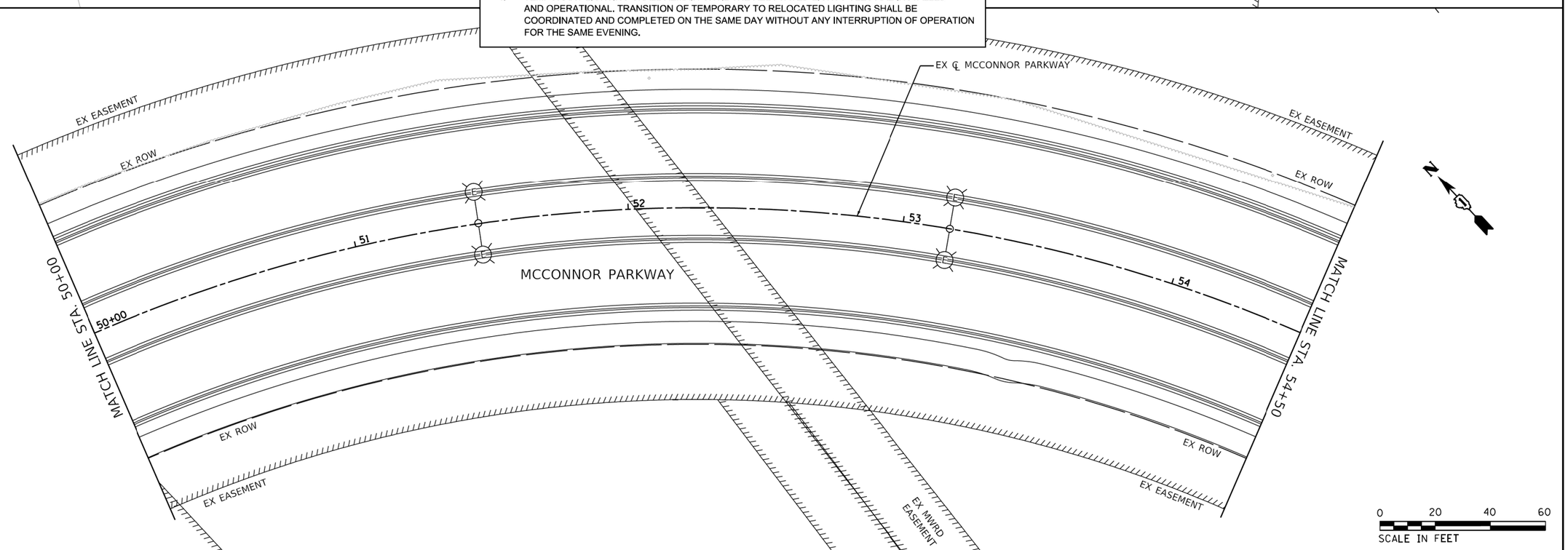

MODEL: Default
FILE NAME: F:\Projects\2024-15 McConnor Parkway-BL A\Design\Sht\22-00142-02-PV_Sht Light proposed 2.dgn

AMES Engineering, Inc. CONSULTING ENGINEERS 6330 Belmont Road, Suite 4B Downers Grove, IL 60516	USER NAME = Mhyder	DESIGNED - MH	REVISED -	STATE OF ILLINOIS DEPARTMENT OF TRANSPORTATION	MCCONNOR PARKWAY – ROOSEVELT BLVD. TO GOLF ROAD LIGHTING PROPOSED PLANS	F.A.U. RTE.	SECTION	COUNTY	TOTAL SHEETS / SHEET NO.
		DRAWN - MD	REVISED -			7008	22-00142-02-PV	COOK	245 / 177
	PLOT SCALE = 40.0000 ' / in.	CHECKED - BL	REVISED -					CONTRACT NO. 61L38	
	PLOT DATE = 2/13/2025	DATE - 01/13/2025	REVISED -		SCALE: 1"=20' SHEET 2 OF 4 SHEETS STA. 45+00 TO STA. 54+50			ILLINOIS FED. AID PROJECT	

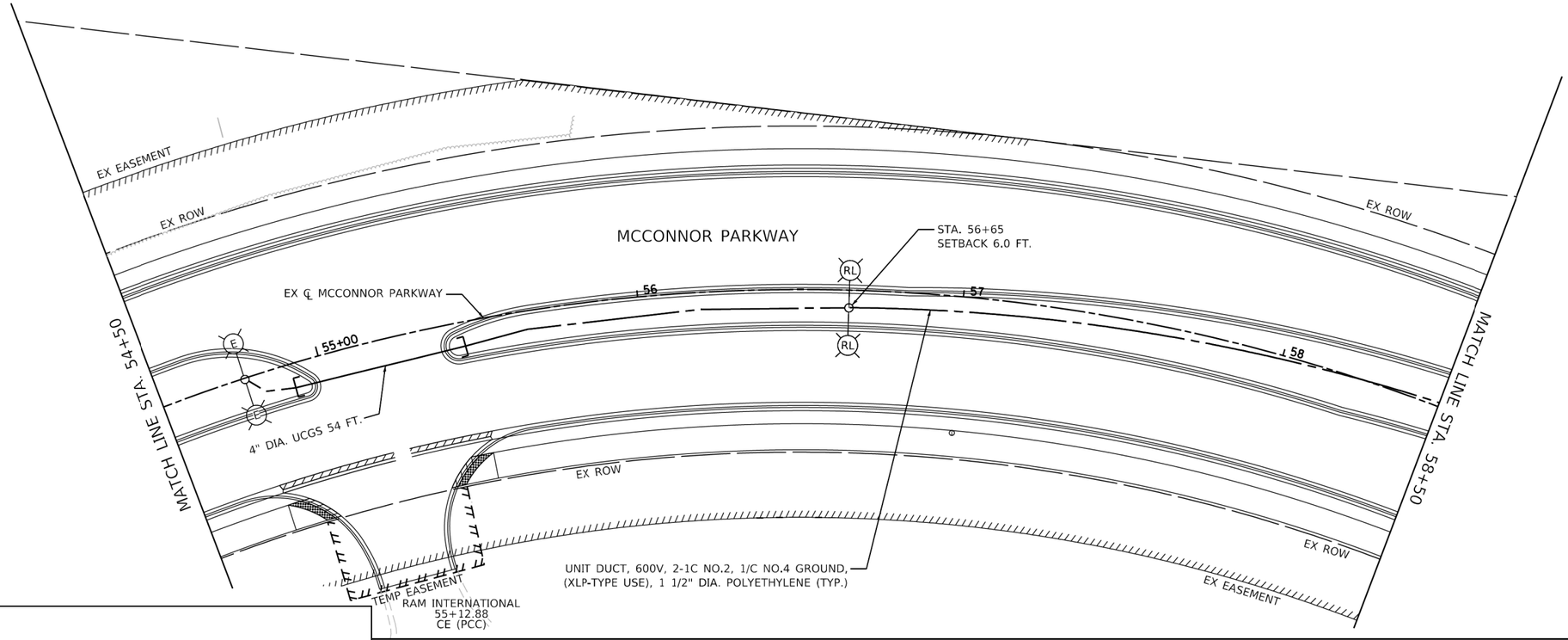

NOTES

1. FOR GENERAL NOTES AND LEGEND, SEE SHEET.
2. LIGHT POLE SETBACKS ARE MEASURED FROM FACE OF CURB TO CENTER OF THE POLE.
3. UCGS STANDS FOR UNDERGROUND CONDUIT, GALVANIZED STEEL.
4. TEMPORARY LIGHTING SHALL REMAIN UNTIL THE RELOCATED LIGHT POLES ARE INSTALLED AND OPERATIONAL. TRANSITION OF TEMPORARY TO RELOCATED LIGHTING SHALL BE COORDINATED AND COMPLETED ON THE SAME DAY WITHOUT ANY INTERRUPTION OF OPERATION FOR THE SAME EVENING.

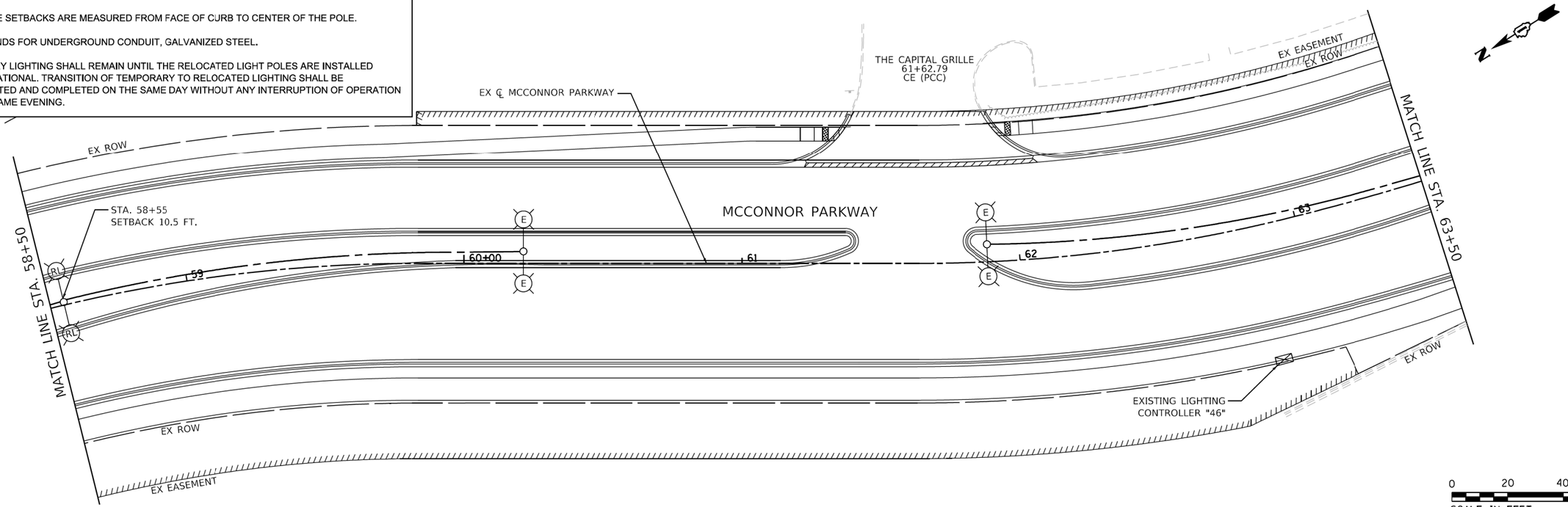

0 20 40 60
SCALE IN FEET

MODEL: Default
FILE NAME: F:\Projects\2024+15 McConnor Parkway-BLA\Design\Sht\22-00142-02-PV_SHT_Light_proposed 3.dgn

AMES Engineering, Inc. CONSULTING ENGINEERS 6330 Belmont Road, Suite 4B Downers Grove, IL 60516	USER NAME = Mhyder	DESIGNED - MH	REVISED -	**STATE OF ILLINOIS DEPARTMENT OF TRANSPORTATION**	**MCCONNOR PARKWAY – ROOSEVELT BLVD. TO GOLF ROAD LIGHTING PROPOSED PLANS**
		DRAWN - MD	REVISED -		
	PLOT SCALE = 40.0000 ' / in.	CHECKED - BL	REVISED -		
	PLOT DATE = 2/13/2025	DATE - 01/13/2025	REVISED -		SCALE: 1" = 20' SHEET 3 OF 4 SHEETS STA. 54+50 TO STA. 63+50

F.A.U. RTE.	SECTION	COUNTY	TOTAL SHEETS	SHEET NO.
7008	22-00142-02-PV	COOK	245	178
		CONTRACT NO. 61L38		
		ILLINOIS FED. AID PROJECT		

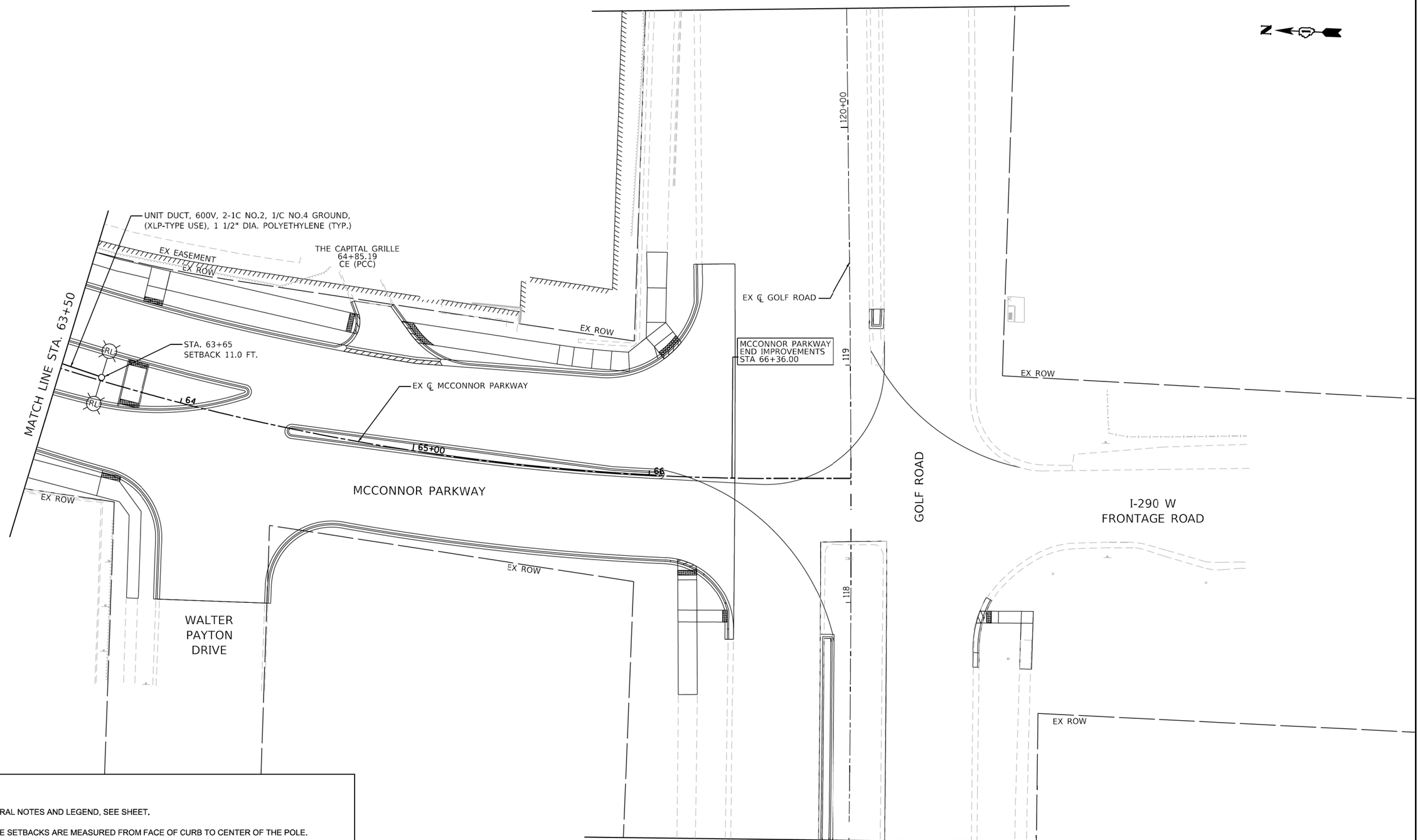

NOTES

1. FOR GENERAL NOTES AND LEGEND, SEE SHEET.
2. LIGHT POLE SETBACKS ARE MEASURED FROM FACE OF CURB TO CENTER OF THE POLE.
3. UCGS STANDS FOR UNDERGROUND CONDUIT, GALVANIZED STEEL.
4. TEMPORARY LIGHTING SHALL REMAIN UNTIL THE RELOCATED LIGHT POLES ARE INSTALLED AND OPERATIONAL. TRANSITION OF TEMPORARY TO RELOCATED LIGHTING SHALL BE COORDINATED AND COMPLETED ON THE SAME DAY WITHOUT ANY INTERRUPTION OF OPERATION FOR THE SAME EVENING.

AMES Engineering, Inc.
CONSULTING ENGINEERS
6330 Belmont Road, Suite 4B
Downers Grove, IL 60516

USER NAME = Mhyder	DESIGNED - MH	REVISED -	
	DRAWN - MD	REVISED -	
PLOT SCALE = 40.0000 ' / in.	CHECKED - BL	REVISED -	
PLOT DATE = 2/13/2025	DATE - 01/13/2025	REVISED -	

STATE OF ILLINOIS
DEPARTMENT OF TRANSPORTATION

MCCONNOR PARKWAY – ROOSEVELT BLVD. TO GOLF ROAD
LIGHTING PROPOSED PLANS

SCALE: 1" = 20' | SHEET 4 OF 4 SHEETS | STA. 63+50 TO STA. 66+85

F.A.U. RTE.	SECTION	COUNTY	TOTAL SHEETS	SHEET NO.
7008	22-00142-02-PV	COOK	245	179
		CONTRACT NO. 61L38		
		ILLINOIS FED. AID PROJECT		

MODEL: Default
FILE NAME: F:\Projects\2024-15 McConnor Parkway-BLA\Design\Sht\22-00142-02-PV_SHT_Light_proposed_4.dgn

NOTES:

1. IN GRASS COVERED AREAS, THE BACKFILL MAY BE COMPACTED EARTH.
2. TRENCHES WITHIN 2' OF PROPOSED OR EXISTING STREETS, DRIVEWAYS, OR SIDEWALKS WILL BE BACKFILLED WITH COMPACTED FA-6 SAND OR LIMESTONE SCREENINGS.
3. WARNING TAPE WILL BE RED WITH BLACK LETTERING TO READ "CAUTION - ELECTRIC LINE BURIED BELOW".
4. ALL GRASS COVERED AREAS DISTURBED DURING CONSTRUCTION WILL BE RESTORED WITH 4" OF TOPSOIL AND SOD.

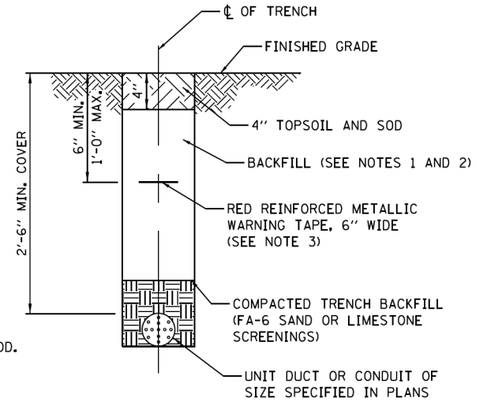

TYPICAL TRENCH CROSS SECTION

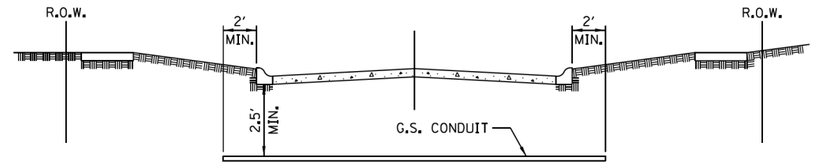

STREET CROSSING

NOTES

1. PAVEMENT INCLUDES ROADS, DRIVEWAYS, SIDEWALKS, AND BIKE PATHS.
2. CONDUIT SHALL BE HEAVY WALL RIGID GALVANIZED STEEL CONDUIT, MINIMUM 2" DIAMETER.
3. CONDUIT SHALL EXTEND A MINIMUM OF 2 FT. BEYOND BACK OF CURB OR EDGE OF PAVEMENT.
4. CONDUIT SHALL BE A MINIMUM OF 2.5 FT. BELOW BOTTOM OF PAVEMENT.

ELECTRICAL CONDUIT UNDER PAVEMENT

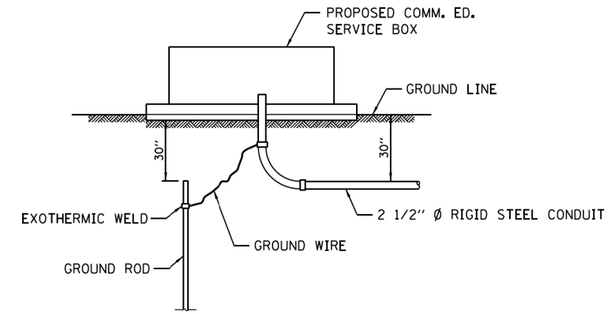

PROPOSED SERVICE INSTALLATION

NOTE: GROUND ROD, GROUND CLAMPS & GROUND WIRE TO BE IN ACCORDANCE WITH COMM. ED. REQUIREMENTS.

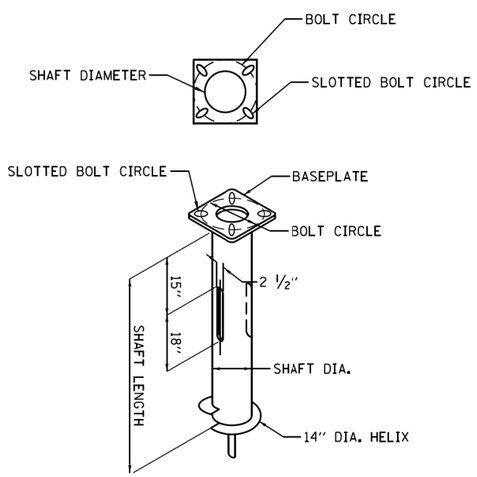

HELIX FOUNDATION SIZE

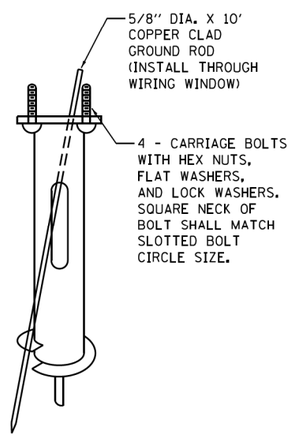

POLE MOUNTING HEIGHT	BOLT CIRCLE	SHAFT DIAMETER	SHAFT LENGTH	BASEPLATE
30 FT.	11½"	8⅝"	6 FT.	12" X 12" X 1"
31 FT. - 35 FT.	11½"	8⅝"	6 FT.	12" X 12" X 1"
36 FT. - 40 FT.	15"	8⅝"	6 FT.	15" X 15" X 1¼"
41 FT. - 45 FT.	15"	8⅝"	6 FT.	15" X 15" X 1¼"
46 FT. - 50 FT.	15"	10"	8 FT.	15" X 15" X 1¼"

NOTES FOR METAL FOUNDATION

1. METAL FOUNDATION SHALL BE THE FOUNDATION USED FOR ALL LIGHTING AND DECORATIVE LIGHTING UNITS UNLESS CONDITIONS IN THE FIELD MAKES IT IMPOSSIBLE TO USE METAL FOUNDATIONS, THEN AN OFFSET FOUNDATION SHALL BE USED WITH ENGINEER APPROVAL.
2. ALL MATERIAL SHALL BE GALVANIZED ACCORDING TO AASHTO M111, UNLESS OTHERWISE SPECIFIED.
3. ALL WELDS SHALL BE CONTINOUS AND NOT LESS THAN ¼" FILLET WELDS. THE WELDED FOUNDATION SHALL BE CAPABLE OF WITHSTANDING 10,000 FT/LBS OF INSTALLATION TORQUE APPLIED ABOUT THE AXIS OF THE FOUNDATION.
4. FABRICATE TWO SLOTS IN THE SHAFT AT 180 DEGREES FOR UNIT DUCTS AND CABLES ENTERING AND LEAVING THE POLE FOUNDATION.
5. TOP PLATE SHALL BE PERMANENTLY MARKED WITH THE CABLING SLOT LOCATIONS.
6. HELIX FOUNDATION SHALL BE INSTALLED VERTICAL AND THE BASEPLATE SHALL BE IN LEVEL. THE BREAKAWAY COUPLINGS AND HARDWARE SHALL NOT BE USED TO ALIGN THE POLE INSTALLATION.
7. THE CABLE TRENCH SHALL BE BACKFILLED AND FIRMLY COMPACTED BEFORE THE INSTALLATION OF THE LIGHT POLE.
8. THE CONTRACTOR SHALL COORDINATE EXTENSION OF ANCHOR BOLTS ABOVE TOP OF THE BASEPLATE WITH THE BREAKAWAY DEVICE MANUFACTURER'S REQUIREMENTS.
9. ANY VOIDS WITHIN THE METAL FOUNDATION SHALL BE FILLED WITH SAND.
10. METAL FOUNDATIONS SHALL BE INSTALLED IN UNDISTURBED SOIL. PREDRILLING A PILOT HOLE AND/OR BACKFILLING AROUND THE FOUNDATION IS NOT ALLOWED.
11. GROUND ROD, 5/8" DIA. x 10', THROUGH FOUNDATION WILL BE REQUIRED AND INCLUDED ON ALL LIGHT POLE FOUNDATIONS INCLUDING METAL FOUNDATIONS.
12. THE METAL FOUNDATION SHALL NOT BE INSTALLED TO A TORQUE WHICH EXCEEDS THE MANUFACTURER'S MAXIMUM TORQUE RATING NOR SHALL IT BE INSTALLED TO AN INSTALLATION TORQUE VALUE OF LESS THAN 3,500 FT LB. METAL FOUNDATIONS THAT ARE NOT INSTALLED TO FULL INSTALLATION DEPTH OR DO NOT ACHIEVE THE MINIMUM INSTALLATION TORQUE SHALL BE REMOVED AND REPLACED WITH A CONCRETE FOUNDATION AT NO ADDITIONAL COST.
13. THE BASEPLATE SHALL BE PERPENDICULAR TO THE SHAFT AXIS (± 1°) AND THE HOLE CENTERLINE SHALL BE CONCENTRIC (± 0.188) TO THE SHAFT AXIS.
14. THE PILOT POINT AND SHAFT AXIS SHALL BE CONCENTRIC (± 0.125) AND IN LINE (± 2°).
15. THE BASEPLATE SHALL BE STAMPED WITH THE MANUFACTURERS NAME AND DATE OF MANUFACTURE.
16. ALL MATERIAL IS TO BE NEW, UNUSED AND MILL TRACEABLE MEETING THE FOLLOWING SPECIFICATIONS:

BASE PLATE: AASHTO M 270M, GRADE 36 (M270M, GRADE 250)

SHAFT: ASTM A 252 - (LATEST REVISION) GRADE 2, (PHOSPHOROUS 0.04% MAXIMUM, SULFUR 0.05% MAXIMUM)

HELIX SCREW: AASHTO M 183 (ASTM A 635) (LATEST REVISION)

PILOT POINT: AASHTO M 270 (ASTM A 575) (LATEST REVISION)

ANCHOR RODS/STUDS: AASHTO M 314 (ASTM F 1554) (LATEST REVISION)

HEXAGON NUTS: AASHTO M 291M (ASTM A 563) GRADE DH, OR AASHTO M 292 (ASTM A 194) GRADE 2H (LATEST REVISION)

WASHERS: AASHTO M 293 (ASTM F 436) (LATEST REVISION)

POLE FOUNDATION METAL

HELIX MUST BE FORMED BY MATCHING METAL DIE (SIDE VIEW OF TRUE HELICAL FORM)

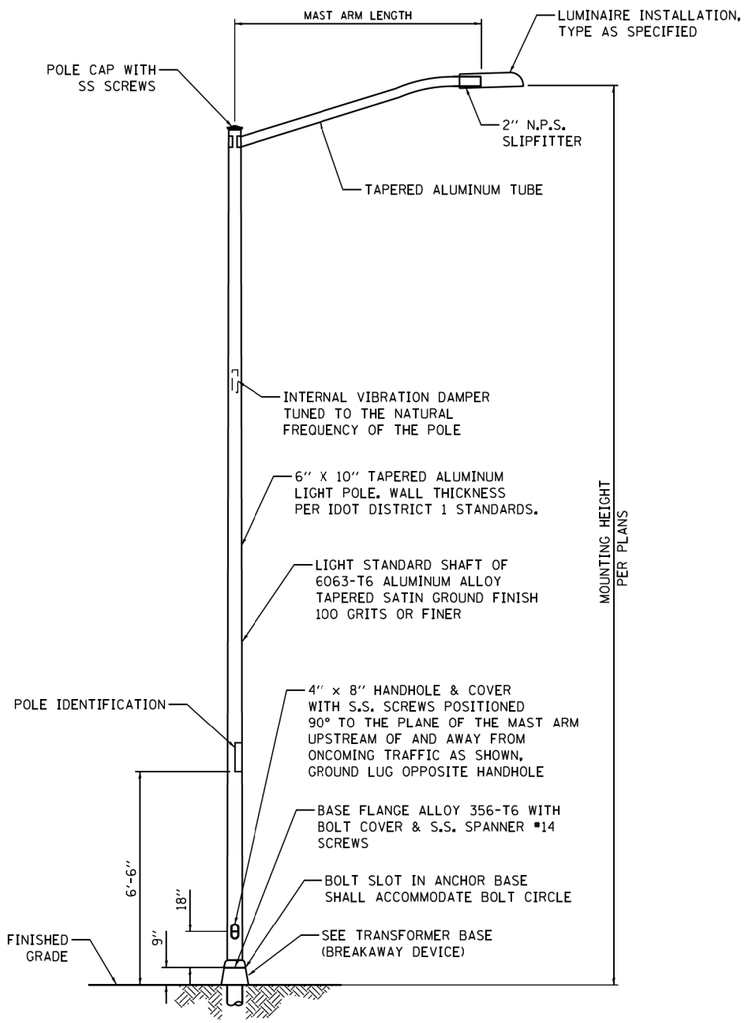

NOTES:

1. HEAT TREATMENT SHALL BE APPLIED AFTER WELDING.
2. DESIGN AND FABRICATION OF THE POLE SHAFT, ARMS, TENONS, AND ATTACHMENTS SHALL BE ACCORDING TO AASHTO "LRFD SPECIFICATIONS FOR STRUCTURAL SUPPORTS FOR HIGHWAY SIGNS, LUMINAIRES AND TRAFFIC SIGNALS" CURRENT AT THE TIME THE PROJECT IS ADVERTISED.
3. POLES AND ARMS SHALL BE BUILT TO TOLERANCES THAT WILL ALLOW CONSISTENT INTERCHANGIBILITY TO FACILITATE REPLACEMENT OF ARMS AND POLES.
4. A DECAL COMPLYING WITH THE ANSI STANDARD SHALL BE PERMANENTLY ATTACHED TO THE LUMINAIRE AT THE FACTORY. THE DECK SHALL ALLOW A VIEWER AT GROUND LEVEL TO IDENTIFY THE WATTAGE AND LUMINAIRE PHOTOMETRIC DISTRIBUTION.

LIGHTING UNIT

(NOT TO SCALE)

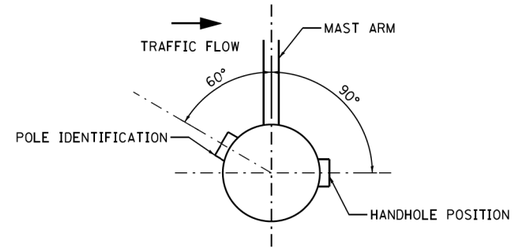

POSITION OF HANDHOLE AND POLE IDENTIFICATION

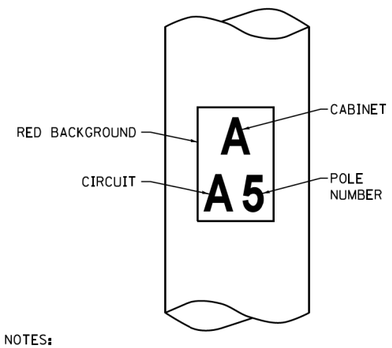

NOTES:

1. 2" HIGH WHITE LETTERS SCREENED ON A 4" X 6" RED, PRESSURE SENSITIVE AND REFLECTIVE BACKGROUND. INSTALL ONLY WHEN AIR TEMPERATURE IS AT LEAST FIFTY DEGREES FAHRENHEIT.
2. THE CONTRACTOR SHALL COORDINATE LIGHT POLE AND CONTROLLER IDENTIFICATION NUMBERS WITH THE VILLAGE PRIOR TO CONSTRUCTION.

POLE IDENTIFICATION

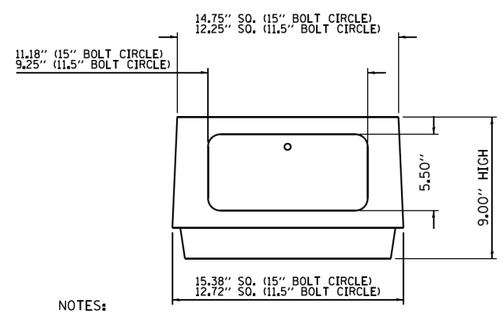

NOTES:

1. DOORS: ALUMINUM ONLY.
2. HARDWARE: CARRIAGE BOLTS SHALL BE USED WITH FLAT WASHER, LOCK WASHER, AND NUTS. NO THREADED ROD ALLOWED.
3. GROUNDING: AREA WHERE THE GROUND WIRE ATTACHES TO TRANSFORMER BASE MUST BE SCRATCHED TO ENSURE EFFECTIVE BONDING.

TRANSFORMER BASE (BREAKAWAY DEVICE)

(MEET LATEST AASHTO REQUIREMENTS)

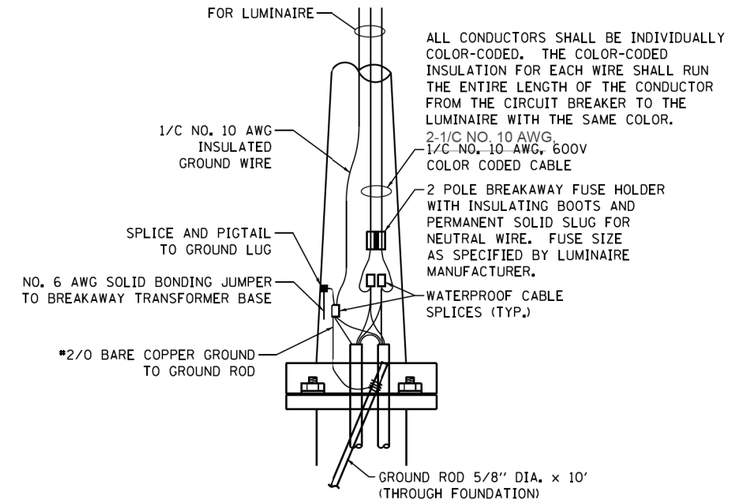

ROADWAY POLE HANDHOLE WIRING DIAGRAM FOR SINGLE LUMINAIRE

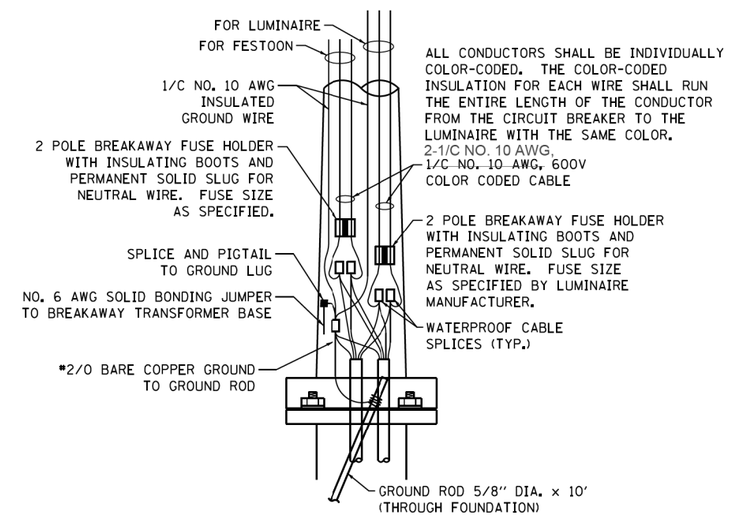

ROADWAY POLE HANDHOLE WIRING DIAGRAM FOR SINGLE LUMINAIRE WITH FESTOON

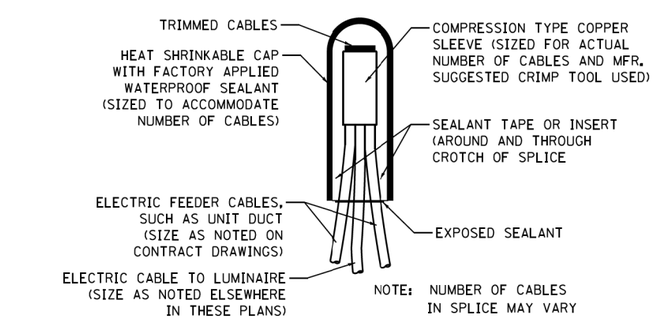

SPLICING ELECTRIC CABLES BASIC MATERIALS AND METHODS

LIGHTING REPAIR GENERAL NOTES:

1. ALL NEW ELECTRIC CABLES SHALL BE INSTALLED IN CONDUITS OR AS UNIT DUCT.
2. ALL CABLES SHALL BE CONTINOUS RUNS BETWEEN ABOVE-GROUND SPLICE CONNECTIONS. NO UNDERGROUND SPLICES SHALL BE ALLOWED.
3. NEW CONDUITS SHALL BE INSTALLED BY BORING.
4. ALL FLEXIBLE CONDUIT/UNIT DUCT RUNS SHALL BE CONTINOUS. NO CONDUIT SPLICING SHALL BE ALLOWED.
5. ALL RIGID STEEL CONDUIT RUNS SHALL BE CONTINOUS. NO CONDUIT SPLICING SHALL BE ALLOWED.
6. RIGID STEEL CONDUITS UNDER PAVEMENT CROSSINGS SHALL BE RE-USED IF THEY ARE NOT DAMAGED AND ARE AT THE PROPER DEPTH. NEW RIGID STEEL CONDUITS SHALL BE INSTALLED IF THE EXISTING CONDUITS ARE DAMAGED OR LESS THAN 30-INCHES DEEP.
7. ALL STREET LIGHTING CONDUITS SHALL BE A MINIMUM OF 30-INCHES DEEP.
8. ALL DISTURBED AREAS SHALL BE BACKFILLED AND RESTORED WITH APPROPRIATE MATERIALS FOR PAVED OR UN-PAVED AREAS.

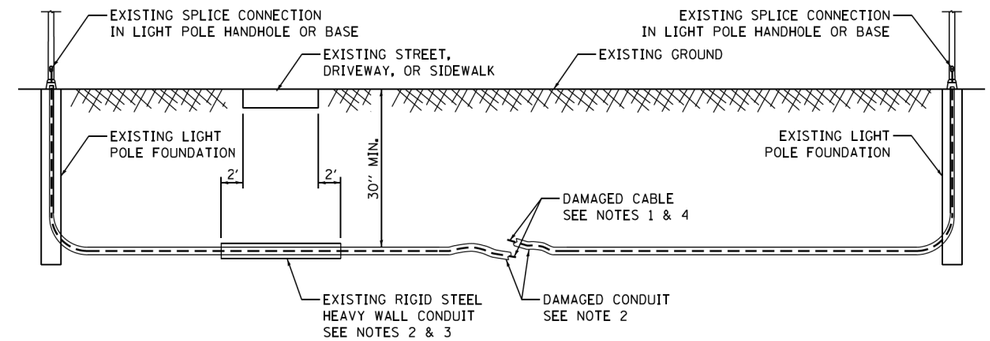

NOTES:

1. REMOVE ALL ELECTRIC CABLES TO THE ADJACENT SPLICE CONNECTION ON EACH SIDE OF THE DAMAGED CONDUIT.
2. REMOVE THE EXISTING HDPE CONDUIT FROM THE LIGHT POLE FOUNDATIONS AND FROM EXISTING RIGID STEEL CONDUITS. ABANDON THE REMAINING CONDUIT RUN.
3. INSTALL NEW HDPE CONDUIT TO MATCH THE EXISTING SIZE, OR PER LATEST ELECTRIC STANDARDS. ROUTE NEW CONDUIT THROUGH EXISTING RIGID STEEL CONDUIT CROSSINGS AND LIGHT POLE FOUNDATIONS. IF RIGID STEEL CONDUITS DO NOT EXIST UNDER PAVEMENT CROSSINGS, THEY SHALL BE INSTALLED AS PART OF THE REPLACEMENT WORK. IF EXISTING RIGID STEEL CONDUITS ARE LESS THAN THE MINIMUM REQUIRED DEPTH, NEW RIGID STEEL CONDUITS SHALL BE INSTALLED AT THE PROPER DEPTH.
4. PROVIDE NEW CABLES EQUIVALENT TO THOSE REMOVED, OR PER LATEST ELECTRIC STANDARDS, FOR THE ENTIRE LENGTH TO THE ADJACENT CONNECTIONS. NO UNDERGROUND CABLE SPLICES ARE ALLOWED.
5. BACKFILL AND RESTORE DISTURBED AREAS WITH APPROPRIATE MATERIALS FOR PAVED OR UN-PAVED AREAS.
6. ALL MATERIAL THAT IS REMOVED IS THE PROPERTY OF THE VILLAGE AND SHALL BE RETURNED TO THE VILLAGE BY THE CONTRACTOR. THIS SHALL INCLUDE BUT IS NOT LIMITED TO: WIRE, CONDUIT, POLES, ARMS, AND FIXTURES.

LIGHTING CONDUIT REPAIR

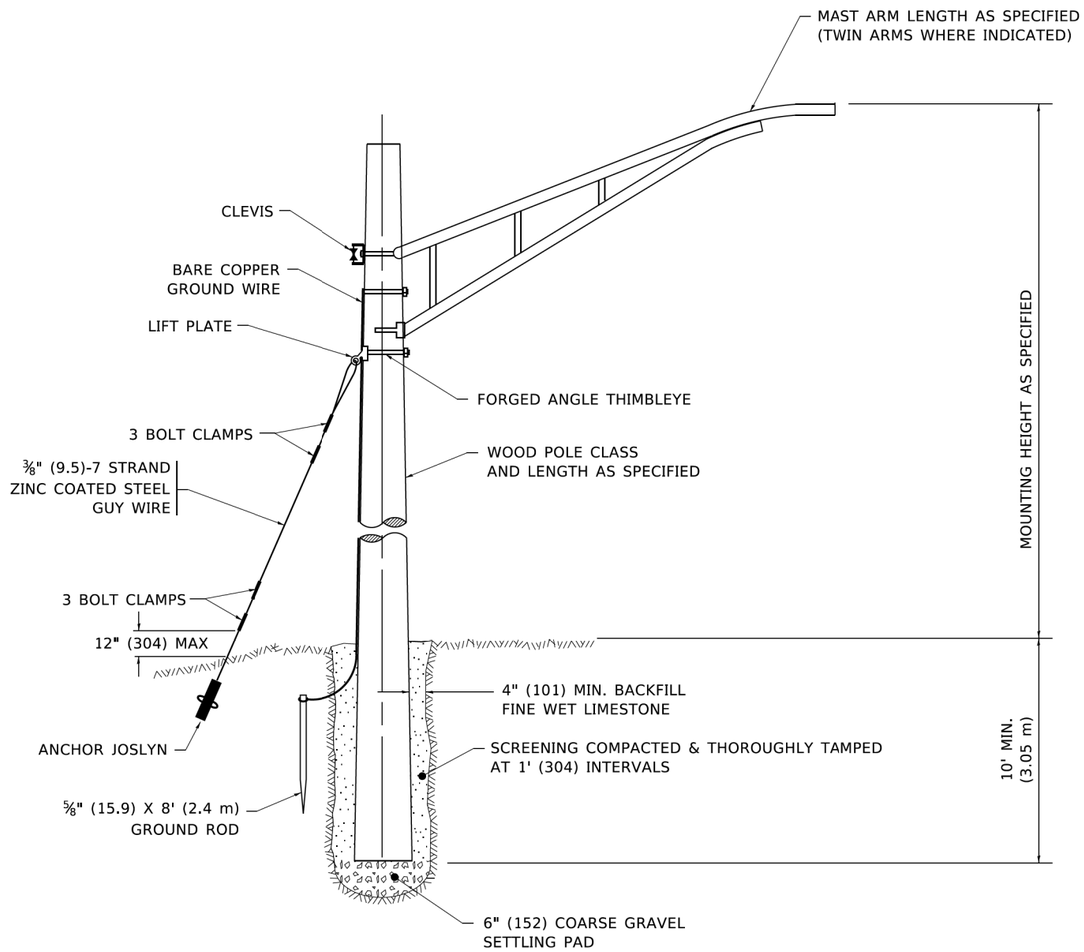

TEMPORARY LIGHT POLE DETAIL

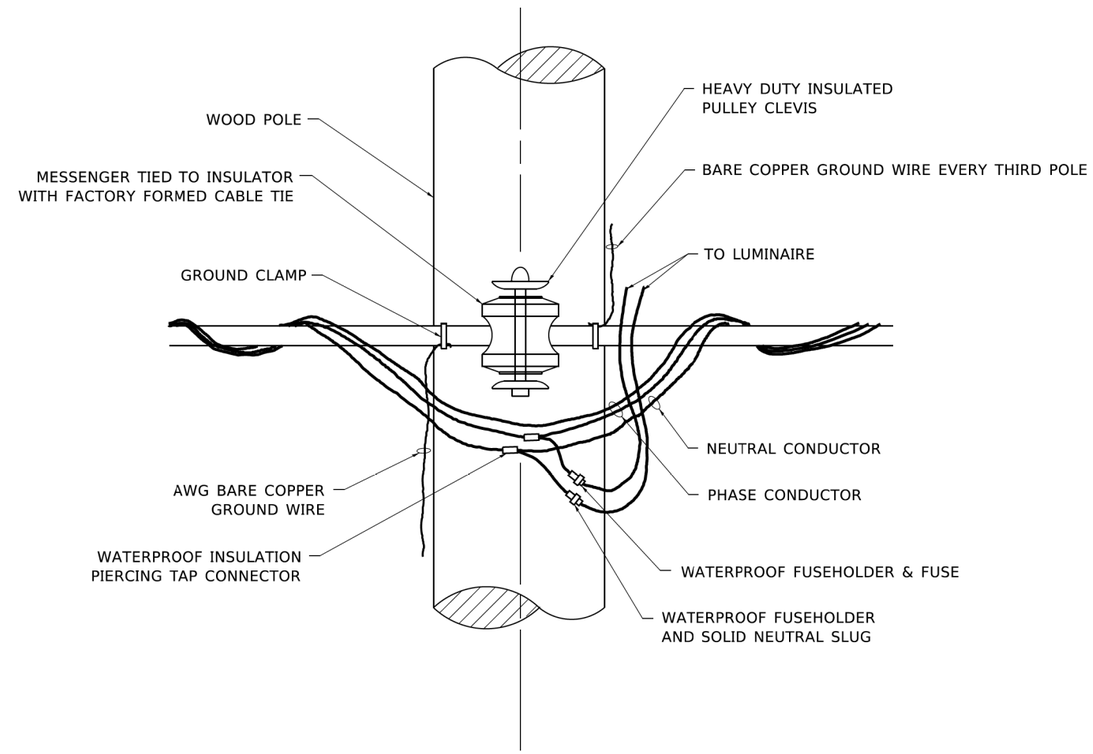

TEMPORARY LIGHT POLE ATTACHMENT DETAIL

NOTE:

1. ALL DIMENSIONS IN INCHES (MILLIMETERS) UNLESS OTHERWISE INDICATED.
2. MAST ARM SHALL BE RATED FOR THE SPECIFIED MOUNTING HEIGHT.

MODEL: Default
FILE NAME: pw://sldannoom.dot.illinois.gov:PWIDOT\Documents\IDOT Offices\District 1\Projects\Dist5\d22x34\CADdata\CADsheets\be800.dgn

AMES Engineering, Inc. CONSULTING ENGINEERS 6330 Belmont Road, Suite 4B Downers Grove, IL 60516	USER NAME = footemj	DESIGNED -	REVISED - 08-08-03	STATE OF ILLINOIS DEPARTMENT OF TRANSPORTATION	TEMPORARY LIGHT POLE DETAILS	F.A.U. RTE.	SECTION	COUNTY	TOTAL SHEETS	SHEET NO.
		DRAWN -	REVISED - R.T. 07-26-16			7008	22-00142-02-PV	COOK	245	183
	PLOT SCALE = 50.0010 ' / in.	CHECKED -	REVISED -			BE–800		CONTRACT NO. 61L38		
	PLOT DATE = 4/19/2019	DATE -	REVISED -		SCALE: NONE SHEET 1 OF 1 SHEETS STA. TO STA.	ILLINOIS FED. AID PROJECT				

be800.dgn 4/19/2019 3:24:15 PM User:footemj

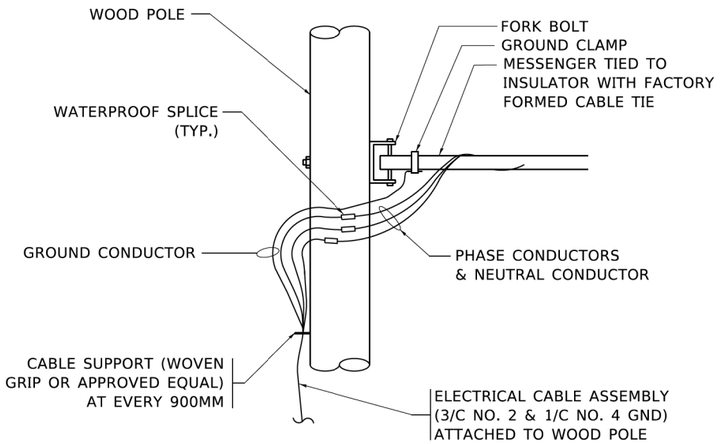

AERIAL CABLE CONNECTION DETAIL

N.T.S.

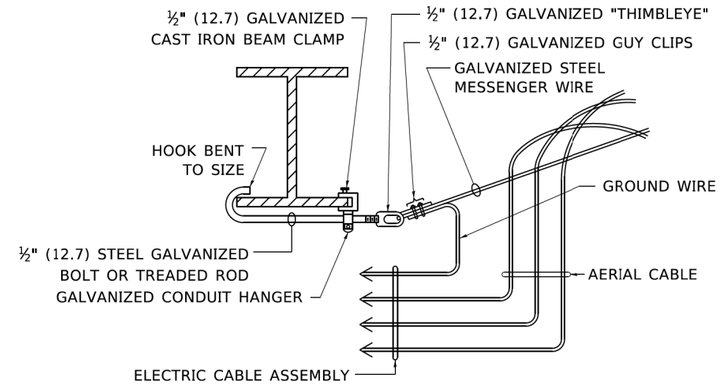

AERIAL CABLE ATTACHED TO STRUCTURE

NOT TO SCALE

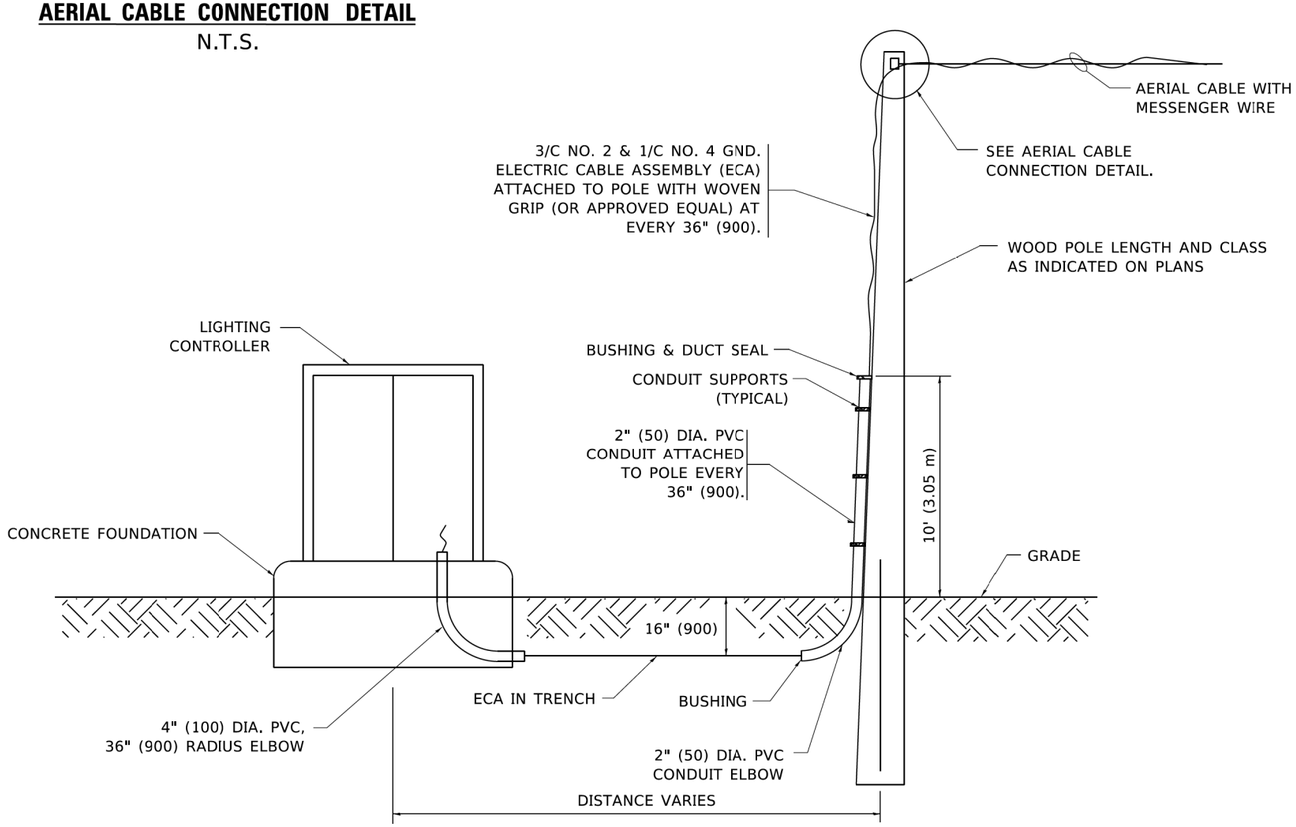

WOOD POLE TO LIGHTING CONTROLLER WIRING CONNECTION DETAIL

N.T.S.

NOTES:

1. ALL DIMENSIONS IN INCHES (MILLIMETERS) UNLESS OTHERWISE INDICATED.
2. SEE PROPOSED LIGHTING PLAN FOR CONDUIT, CABLE AND ROUTING.
3. THE CONTRACTOR SHALL PROVIDE INTERMEDIATE SUPPORTS TO MAINTAIN MINIMUM CLEARANCES. REFER TO AERIAL AERIAL CABLE ATTACHED TO STRUCTURE DETAIL.
4. COST OF SPLICES AND MOUNTING HARDWARE SHALL BE INCLUDED IN THE UNIT PRICE FOR AERIAL CABLE.

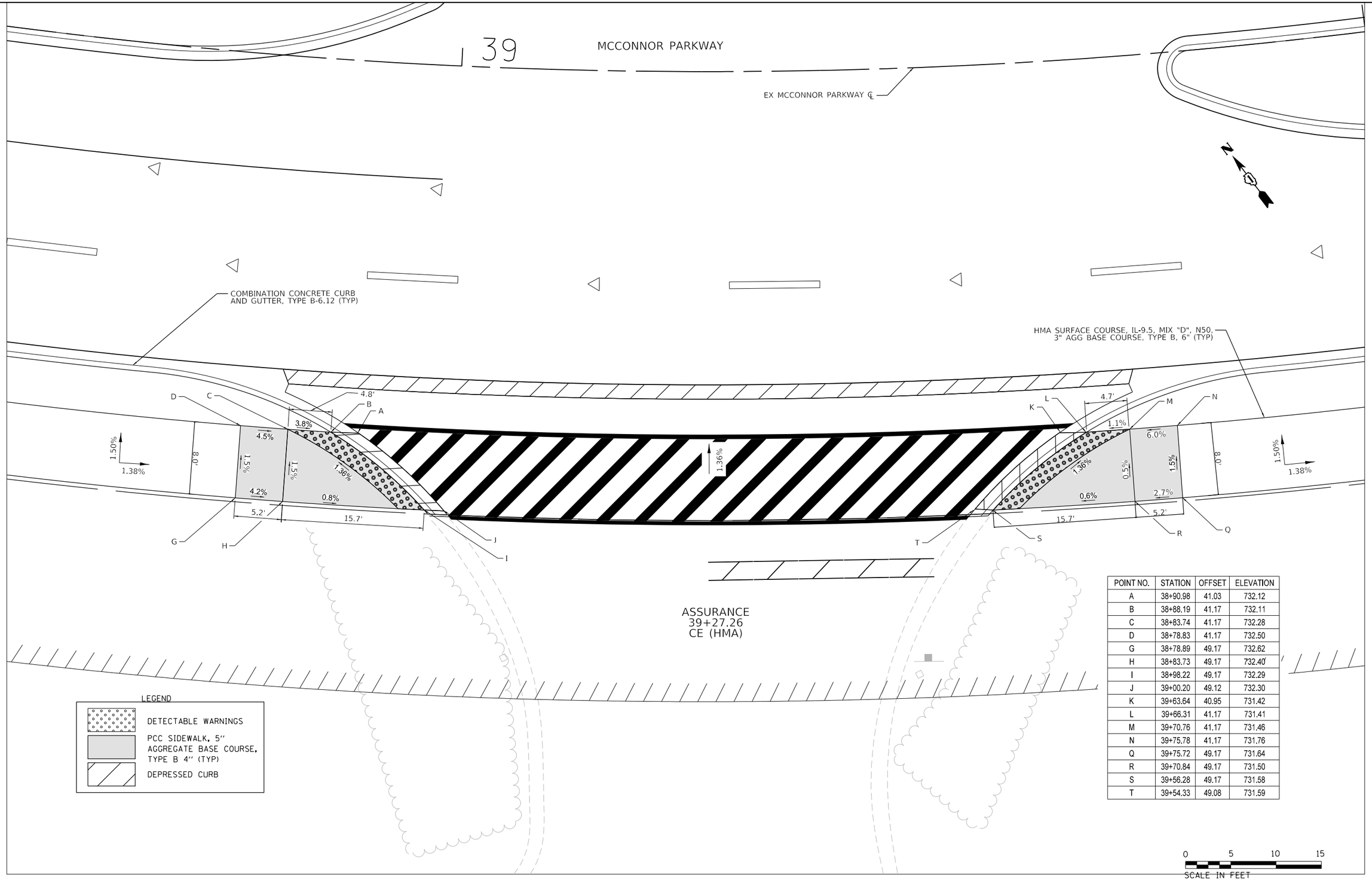

POINT NO.	STATION	OFFSET	ELEVATION
A	38+90.98	41.03	732.12
B	38+88.19	41.17	732.11
C	38+83.74	41.17	732.28
D	38+78.83	41.17	732.50
G	38+78.89	49.17	732.62
H	38+83.73	49.17	732.40
I	38+98.22	49.17	732.29
J	39+00.20	49.12	732.30
K	39+63.64	40.95	731.42
L	39+66.31	41.17	731.41
M	39+70.76	41.17	731.46
N	39+75.78	41.17	731.76
Q	39+75.72	49.17	731.64
R	39+70.84	49.17	731.50
S	39+56.28	49.17	731.58
T	39+54.33	49.08	731.59

MODEL: Default
FILE NAME: F:\861-078 VOS McConnor Parkway\CADD Sheets\Contract 02 CADD Sheets\16 ADA Ramp Details\22-00142-02-PV_Stif_ADA_1.dgn

BLA, Inc.

USER NAME = jrodriguez	DESIGNED - JR	REVISED -
	DRAWN - JR	REVISED -
PLOT SCALE = 10.0000 ' / in.	CHECKED - GJE	REVISED -
PLOT DATE = 6/4/2025	DATE - 02/18/2025	REVISED -

STATE OF ILLINOIS
DEPARTMENT OF TRANSPORTATION

MCCONNOR PARKWAY RECONSTRUCTION
ADA RAMP DETAILS

SCALE: 1" = 5' | SHEET 1 OF 10 SHEETS | STA. N/A TO STA. N/A

F.A.U. RTE.	SECTION	COUNTY	TOTAL SHEETS	SHEET NO.
7008	22-00142-02-PV	COOK	245	185

CONTRACT NO. 61L38

ILLINOIS FED. AID PROJECT

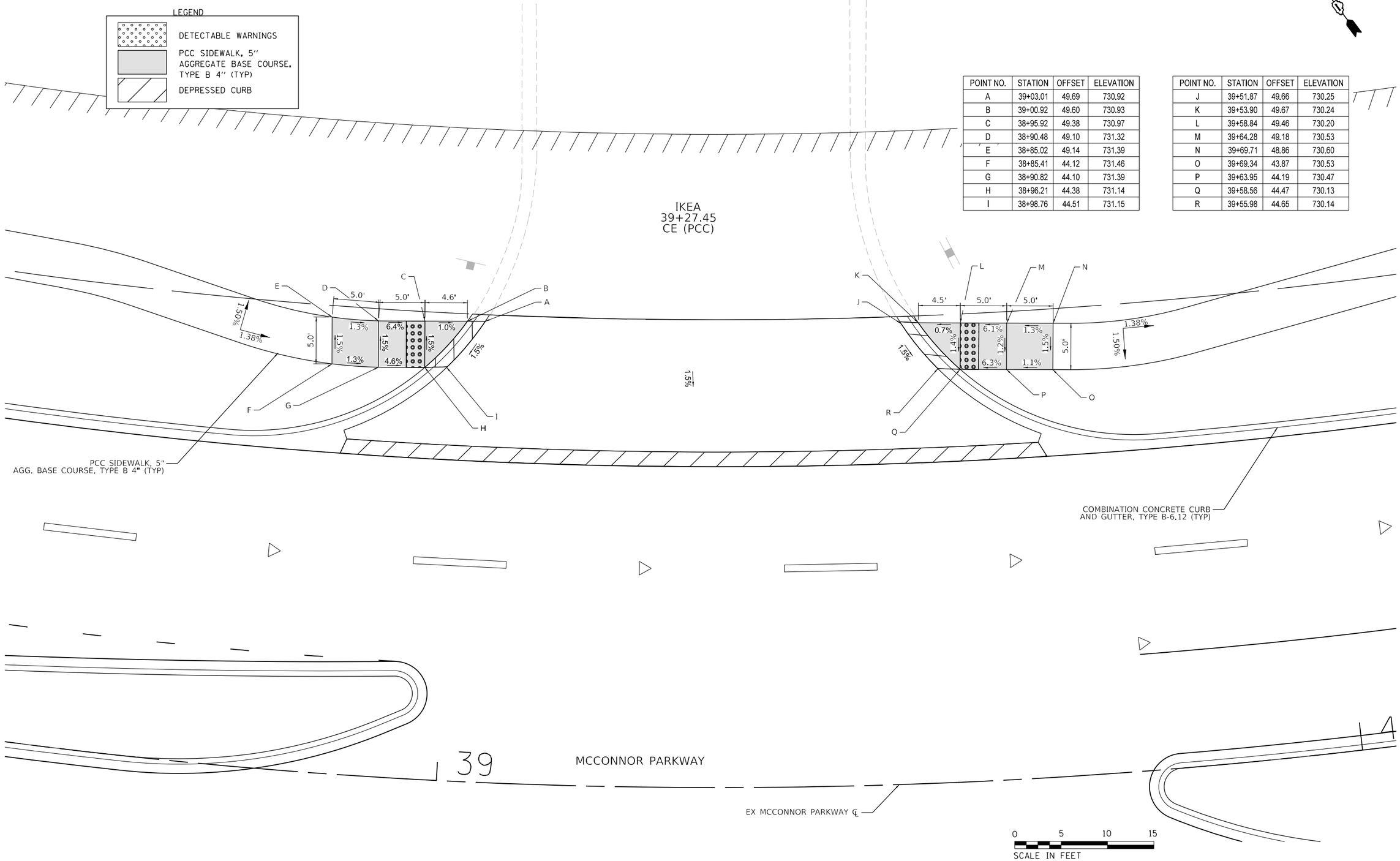

POINT NO.	STATION	OFFSET	ELEVATION
A	39+03.01	49.69	730.92
B	39+00.92	49.60	730.93
C	38+95.92	49.38	730.97
D	38+90.48	49.10	731.32
E	38+85.02	49.14	731.39
F	38+85.41	44.12	731.46
G	38+90.82	44.10	731.39
H	38+96.21	44.38	731.14
I	38+98.76	44.51	731.15

POINT NO.	STATION	OFFSET	ELEVATION
J	39+51.87	49.66	730.25
K	39+53.90	49.67	730.24
L	39+58.84	49.46	730.20
M	39+64.28	49.18	730.53
N	39+69.71	48.86	730.60
O	39+69.34	43.87	730.53
P	39+63.95	44.19	730.47
Q	39+58.56	44.47	730.13
R	39+55.98	44.65	730.14

MODEL: Default
FILE NAME: F:\061-078 VoS McConnor Parkway\CADD Sheets\Contract 02 CADD Sheets\16 ADA Ramp Details\32-00142-02-PV_SHT_ADA_2.dgn

BLA, Inc.

USER NAME = jrodriguez	DESIGNED - JR	REVISED -	
	DRAWN - JR	REVISED -	
PLOT SCALE = 10.0000 ' / in.	CHECKED - GJE	REVISED -	
PLOT DATE = 6/4/2025	DATE - 02/18/2025	REVISED -	

STATE OF ILLINOIS
DEPARTMENT OF TRANSPORTATION

MCCONNOR PARKWAY RECONSTRUCTION
ADA RAMP DETAILS

SCALE: 1" = 5' | SHEET 2 OF 10 SHEETS | STA. N/A TO STA. N/A

F.A.U. RTE.	SECTION	COUNTY	TOTAL SHEETS	SHEET NO.
7008	22-00142-02-PV	COOK	245	186

CONTRACT NO. 61L38

ILLINOIS FED. AID PROJECT

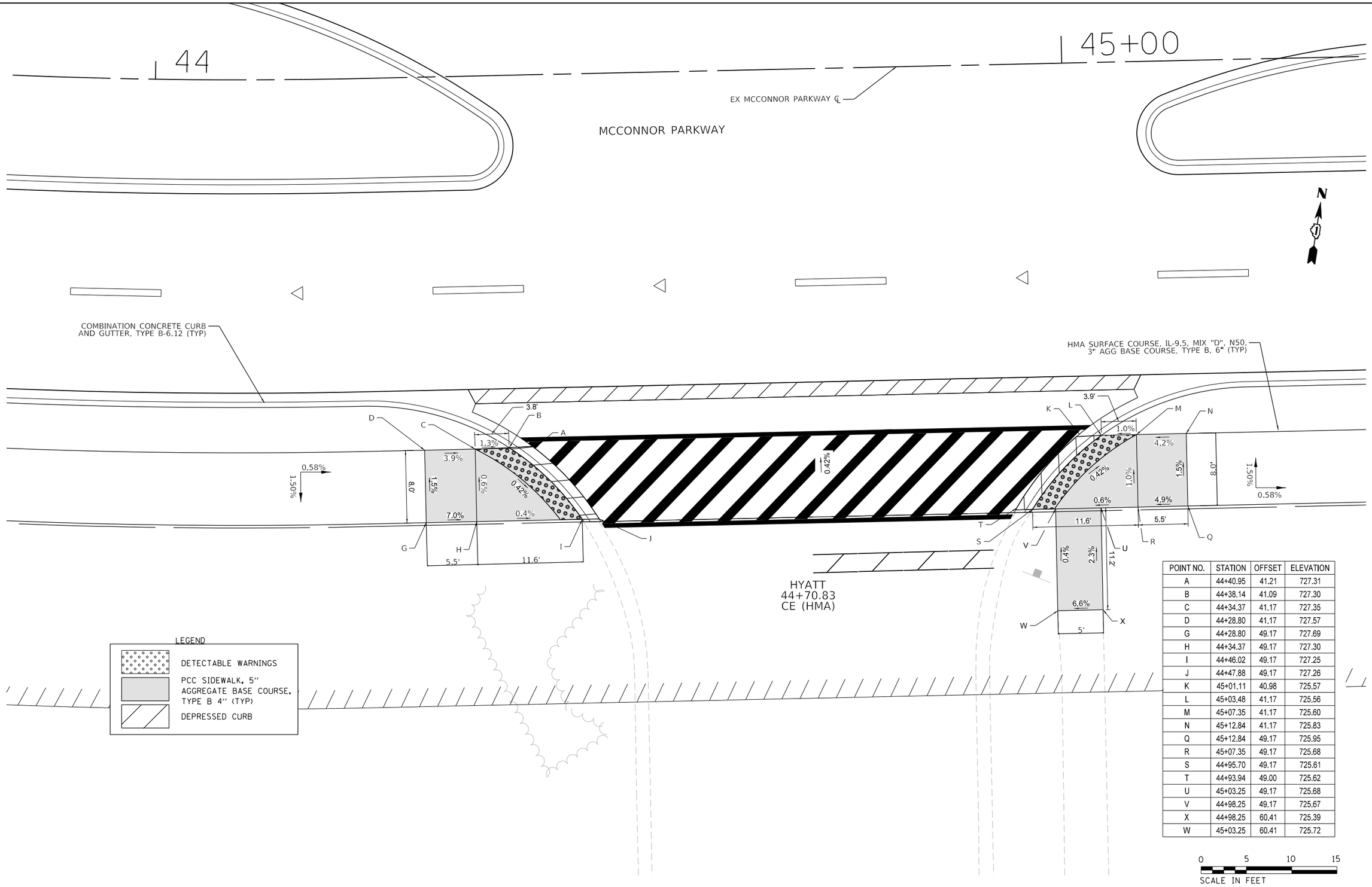

POINT NO.	STATION	OFFSET	ELEVATION
A	44+40.95	41.21	727.31
B	44+38.14	41.09	727.30
C	44+34.37	41.17	727.35
D	44+28.80	41.17	727.57
G	44+28.80	49.17	727.69
H	44+34.37	49.17	727.30
I	44+46.02	49.17	727.25
J	44+47.88	49.17	727.26
K	45+01.11	40.98	725.57
L	45+03.48	41.17	725.56
M	45+07.35	41.17	725.60
N	45+12.84	41.17	725.83
Q	45+12.84	49.17	725.95
R	45+07.35	49.17	725.68
S	44+95.70	49.17	725.61
T	44+93.94	49.00	725.62
U	45+03.25	49.17	725.68
V	44+98.25	49.17	725.67
X	44+98.25	60.41	725.39
W	45+03.25	60.41	725.72

MODEL: Default
FILE NAME: F:\861-078 VOS McConnor Parkway\CADD Sheets\Contract 02 CADD Sheets\16 ADA Ramp Details\22-00142-02-PV SHT ADA 3.dgn

BLA, Inc.

USER NAME = jrodriguez	DESIGNED - JR	REVISED -
	DRAWN - JR	REVISED -
PLOT SCALE = 10.0000 ' / in.	CHECKED - GJE	REVISED -
PLOT DATE = 6/4/2025	DATE - 02/18/2025	REVISED -

STATE OF ILLINOIS
DEPARTMENT OF TRANSPORTATION

MCCONNOR PARKWAY RECONSTRUCTION
ADA RAMP DETAILS

SCALE: 1" = 5' | SHEET 3 OF 10 SHEETS | STA. N/A TO STA. N/A

F.A.U. RTE.	SECTION	COUNTY	TOTAL SHEETS	SHEET NO.
7008	22-00142-02-PV	COOK	245	187

CONTRACT NO. 61L38

ILLINOIS FED. AID PROJECT

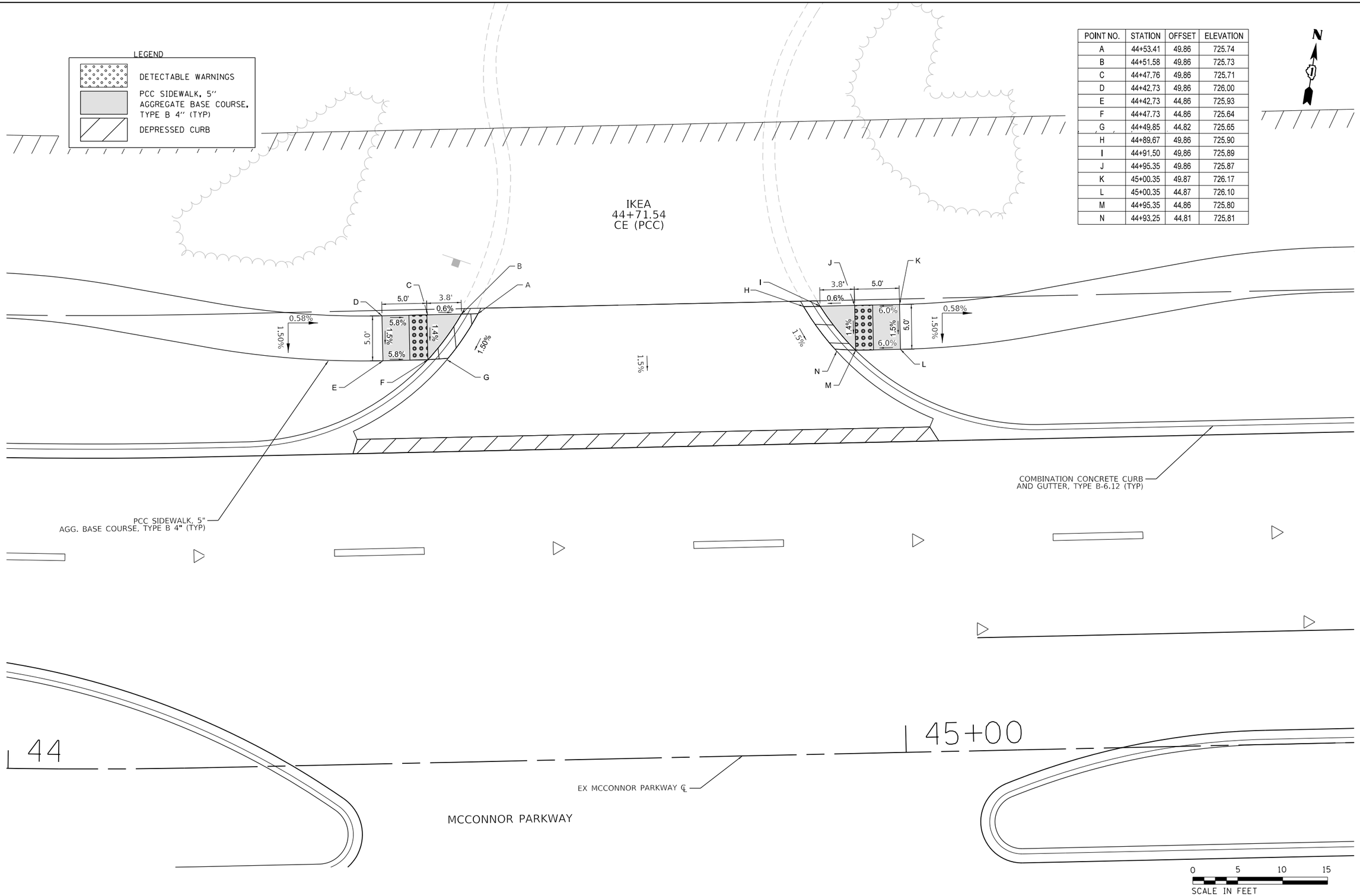

POINT NO.	STATION	OFFSET	ELEVATION
A	44+53.41	49.86	725.74
B	44+51.58	49.86	725.73
C	44+47.76	49.86	725.71
D	44+42.73	49.86	726.00
E	44+42.73	44.86	725.93
F	44+47.73	44.86	725.64
G	44+49.85	44.82	725.65
H	44+89.67	49.86	725.90
I	44+91.50	49.86	725.89
J	44+95.35	49.86	725.87
K	45+00.35	49.87	726.17
L	45+00.35	44.87	726.10
M	44+95.35	44.86	725.80
N	44+93.25	44.81	725.81

MODEL: Default
FILE NAME: F:\061-078 WIS McConnor Parkway\CADD Sheets\Contract 02 CADD Sheets\16 ADA Ramp Details\22-00142-02-PV SHT_ADA_4.dgn

BLA, Inc.

USER NAME = jrodriguez	DESIGNED - JR	REVISED -
	DRAWN - JR	REVISED -
PLOT SCALE = 10.0000 ' / in.	CHECKED - GJE	REVISED -
PLOT DATE = 6/4/2025	DATE - 02/18/2025	REVISED -

STATE OF ILLINOIS
DEPARTMENT OF TRANSPORTATION

MCCONNOR PARKWAY RECONSTRUCTION
ADA RAMP DETAILS

SCALE: 1" = 5' | SHEET 4 OF 10 SHEETS | STA. N/A TO STA. N/A

F.A.U. RTE.	SECTION	COUNTY	TOTAL SHEETS	SHEET NO.
7008	22-00142-02-PV	COOK	245	188

CONTRACT NO. 61L38

ILLINOIS FED. AID PROJECT

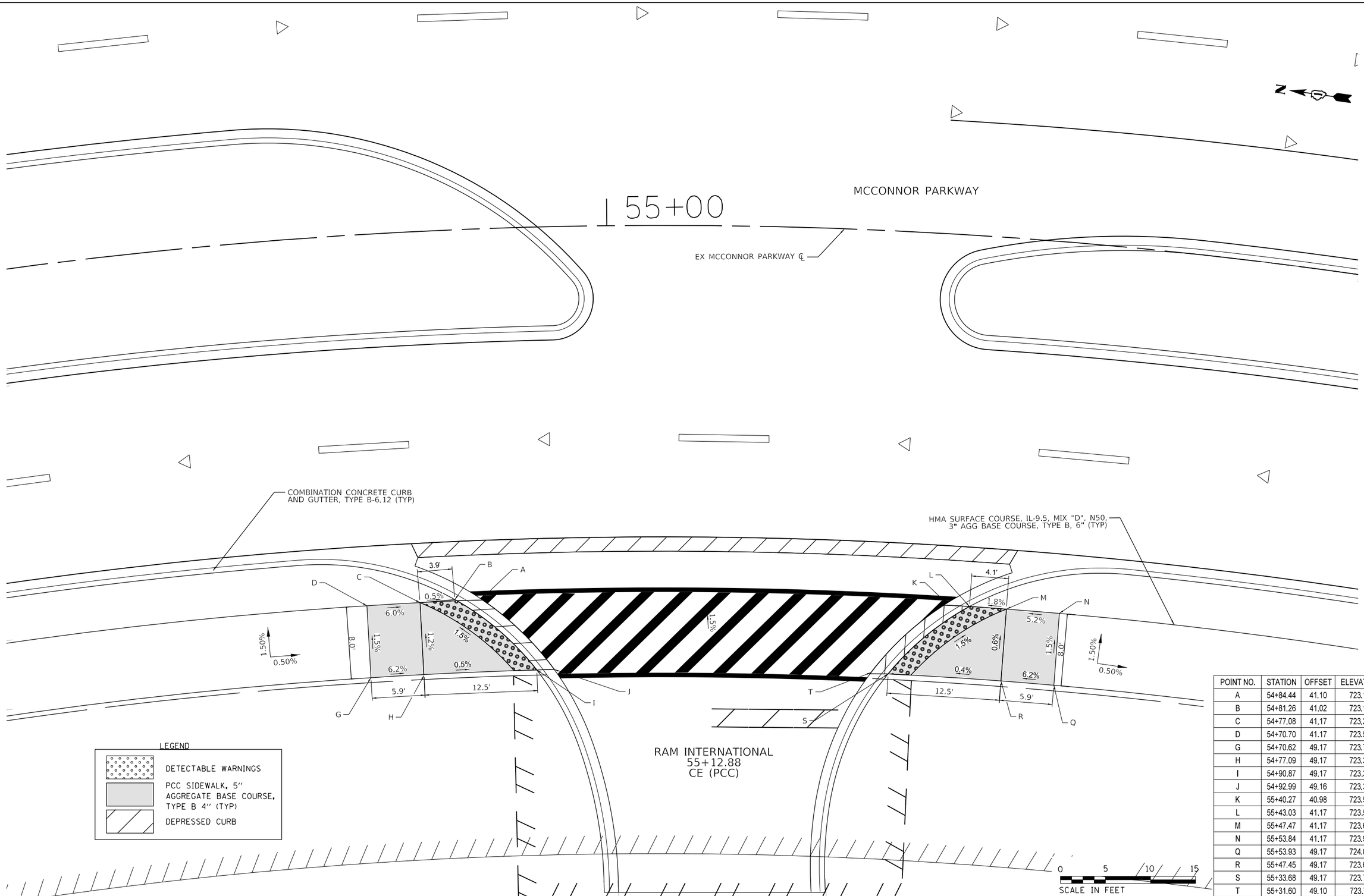

POINT NO.	STATION	OFFSET	ELEVATION
A	54+84.44	41.10	723.19
B	54+81.26	41.02	723.18
C	54+77.08	41.17	723.20
D	54+70.70	41.17	723.58
G	54+70.62	49.17	723.70
H	54+77.09	49.17	723.30
I	54+90.87	49.17	723.37
J	54+92.99	49.16	723.38
K	55+40.27	40.98	723.53
L	55+43.03	41.17	723.52
M	55+47.47	41.17	723.60
N	55+53.84	41.17	723.93
Q	55+53.93	49.17	724.05
R	55+47.45	49.17	723.65
S	55+33.68	49.17	723.70
T	55+31.60	49.10	723.71

MODEL: Default
FILE NAME: F:\861-078 VoS McConnor Parkway\CADD Sheets\Contract 02 CADD Sheets\16 ADA Ramp Details\22-00142-02-PV_SHT_ADA_5.dgn

BLA, Inc.

USER NAME = jrodriguez	DESIGNED - JR	REVISED -
	DRAWN - JR	REVISED -
PLOT SCALE = 10.0000 ' / in.	CHECKED - GJE	REVISED -
PLOT DATE = 6/4/2025	DATE - 02/18/2025	REVISED -

STATE OF ILLINOIS
DEPARTMENT OF TRANSPORTATION

MCCONNOR PARKWAY RECONSTRUCTION
ADA RAMP DETAILS

SCALE: 1" = 5' | SHEET 5 OF 10 SHEETS | STA. N/A TO STA. N/A

F.A.U. RTE.	SECTION	COUNTY	TOTAL SHEETS	SHEET NO.
7008	22-00142-02-PV	COOK	245	189

CONTRACT NO. 61L38

ILLINOIS FED. AID PROJECT

POINT NO.	STATION	OFFSET	ELEVATION
A	61+37.21	49.23	723.13
B	61+35.26	49.17	723.12
C	61+30.88	49.17	723.24
D	61+25.88	49.17	723.49
E	61+20.88	49.17	723.52
F	61+20.88	44.17	723.50
G	61+25.88	44.17	723.47
H	61+30.88	44.17	723.22
I	61+33.25	44.26	723.23
J	61+90.87	50.01	724.40
K	61+92.96	50.01	724.39
L	61+97.44	50.17	724.36
M	62+02.94	50.17	724.68
N	62+08.45	50.17	724.32
O	62+08.34	45.17	724.25
P	62+02.89	45.17	724.61
Q	61+97.44	45.17	724.29
R	61+94.90	45.28	724.30

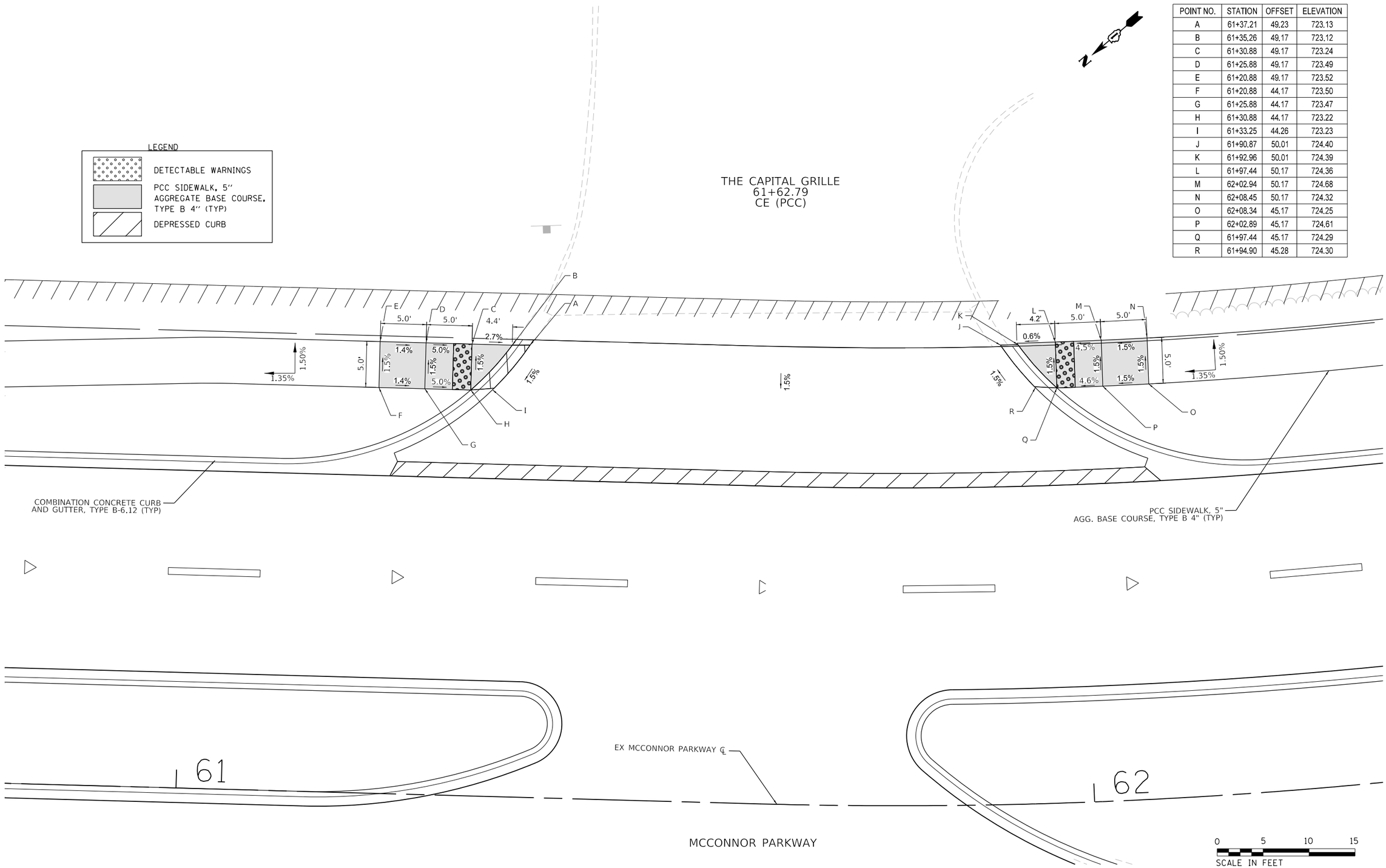

MODEL: Default
FILE NAME: F:\061-078 VGS McConnor Parkway\CADD Sheets\Contract 02 CADD Sheets\16 ADA Ramp Details\22-00142-02-PV_SHT_ADA_6.dgn

BLA, Inc.

USER NAME = jrodriguez	DESIGNED - JR	REVISED -	
	DRAWN - JR	REVISED -	
PLOT SCALE = 10.0000 ' / in.	CHECKED - GJE	REVISED -	
PLOT DATE = 6/4/2025	DATE - 02/18/2025	REVISED -	

STATE OF ILLINOIS
DEPARTMENT OF TRANSPORTATION

MCCONNOR PARKWAY RECONSTRUCTION
ADA RAMP DETAILS

SCALE: 1" = 5' | SHEET 6 OF 10 SHEETS | STA. N/A TO STA. N/A

F.A.U. RTE.	SECTION	COUNTY	TOTAL SHEETS	SHEET NO.
7008	22-00142-02-PV	COOK	245	190

CONTRACT NO. 61L38

ILLINOIS FED. AID PROJECT

POINT NO.	STATION	OFFSET	ELEVATION
A	63+76.23	34.51	723.62
B	63+76.21	36.09	723.61
C	63+76.61	46.97	723.76
D	63+84.25	46.86	723.61
E	63+83.95	36.60	723.46
F	63+84.08	35.01	723.47
G	63+75.22	9.76	723.99
H	63+75.14	8.17	723.98
I	63+74.74	1.87	724.03
J	63+74.33	12.02	723.89
K	63+74.31	13.60	723.90
L	63+82.43	13.66	723.80
M	63+82.43	12.08	723.79
N	63+82.75	2.18	723.91
O	63+83.04	6.85	723.84
P	63+83.20	8.43	723.85
Q	63+73.42	35.60	723.66
R	63+73.27	37.18	723.65
S	63+72.98	44.03	723.70
T	63+81.34	44.35	723.60
U	63+81.59	37.24	723.50
V	63+81.55	35.65	723.51
W	63+72.98	52.03	723.82
X	63+81.34	52.35	723.72
Y	63+72.98	47.03	723.76

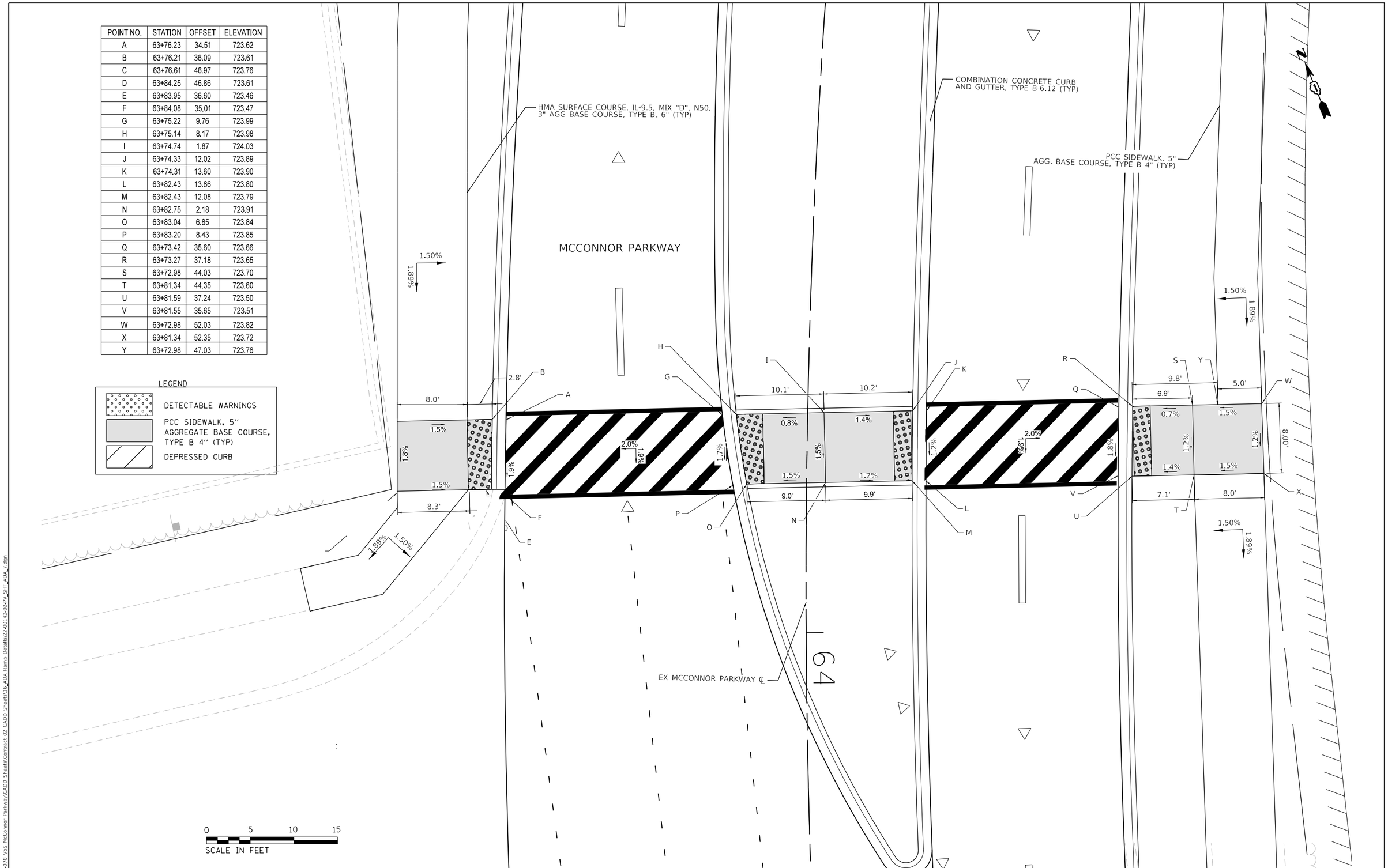

BLA, Inc.	USER NAME = jrodriguez	DESIGNED - JR	REVISED -
		DRAWN - JR	REVISED -
	PLOT SCALE = 10.0000 ' / in.	CHECKED - GJE	REVISED -
	PLOT DATE = 6/4/2025	DATE - 02/18/2025	REVISED -

STATE OF ILLINOIS
DEPARTMENT OF TRANSPORTATION

MCCONNOR PARKWAY RECONSTRUCTION
ADA RAMP DETAILS

SCALE: 1" = 5' | SHEET 7 OF 10 SHEETS | STA. N/A TO STA. N/A

F.A.U. RTE.	SECTION	COUNTY	TOTAL SHEETS	SHEET NO.
7008	22-00142-02-PV	COOK	245	191

CONTRACT NO. 61L38

ILLINOIS FED. AID PROJECT

MODEL: Default
FILE NAME: F:\061-078 WS McConnor Parkway\CADD Sheets\Contract 02 CADD Sheets\16 ADA Ramp Details\22-00142-02-PV SHT ADA 7.dgn

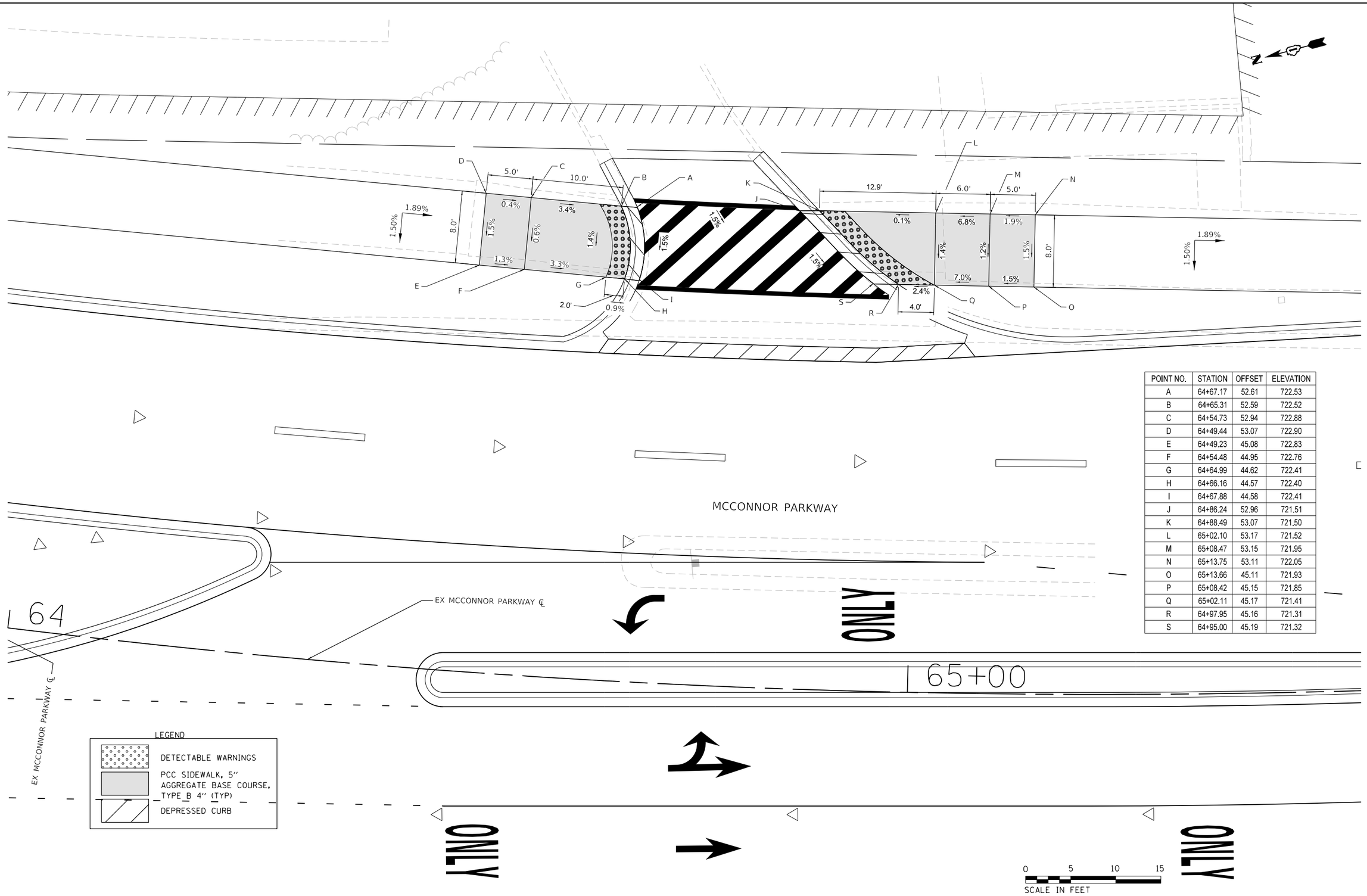

POINT NO.	STATION	OFFSET	ELEVATION
A	64+67.17	52.61	722.53
B	64+65.31	52.59	722.52
C	64+54.73	52.94	722.88
D	64+49.44	53.07	722.90
E	64+49.23	45.08	722.83
F	64+54.48	44.95	722.76
G	64+64.99	44.62	722.41
H	64+66.16	44.57	722.40
I	64+67.88	44.58	722.41
J	64+86.24	52.96	721.51
K	64+88.49	53.07	721.50
L	65+02.10	53.17	721.52
M	65+08.47	53.15	721.95
N	65+13.75	53.11	722.05
O	65+13.66	45.11	721.93
P	65+08.42	45.15	721.85
Q	65+02.11	45.17	721.41
R	64+97.95	45.16	721.31
S	64+95.00	45.19	721.32

MODEL: Default
FILE NAME: F:\861-078 VOS McConnor Parkway\CADD Sheets\Contract 02 CADD Sheets\16 ADA Ramp Details\22-00142-02-PV SHT ADA 8.dgn

BLA, Inc.

USER NAME = jrodriguez	DESIGNED - JR	REVISED -
	DRAWN - JR	REVISED -
PLOT SCALE = 10.0000 ' / in.	CHECKED - GJE	REVISED -
PLOT DATE = 6/4/2025	DATE - 02/18/2025	REVISED -

STATE OF ILLINOIS
DEPARTMENT OF TRANSPORTATION

MCCONNOR PARKWAY RECONSTRUCTION
ADA RAMP DETAILS

SCALE: 1" = 5' | SHEET 8 OF 10 SHEETS | STA. N/A TO STA. N/A

F.A.U. RTE.	SECTION	COUNTY	TOTAL SHEETS	SHEET NO.
7008	22-00142-02-PV	COOK	245	192

CONTRACT NO. 61L38

ILLINOIS FED. AID PROJECT

POINT NO.	STATION	OFFSET	ELEVATION
A	66+11.43	56.72	718.61
B	66+10.06	57.64	718.60
C	66+07.26	60.69	718.65
D	66+03.76	64.46	718.72
E	66+03.33	78.97	718.77
F	65+94.65	78.64	718.89
G	65+95.21	64.13	718.85
H	65+95.46	57.60	718.75
I	65+88.00	51.13	719.00
J	65+80.61	51.10	719.10
K	65+80.57	43.10	718.98
L	65+88.99	43.14	718.95
M	65+99.27	54.11	718.80
N	66+02.78	50.32	718.75
O	66+03.96	49.18	718.76

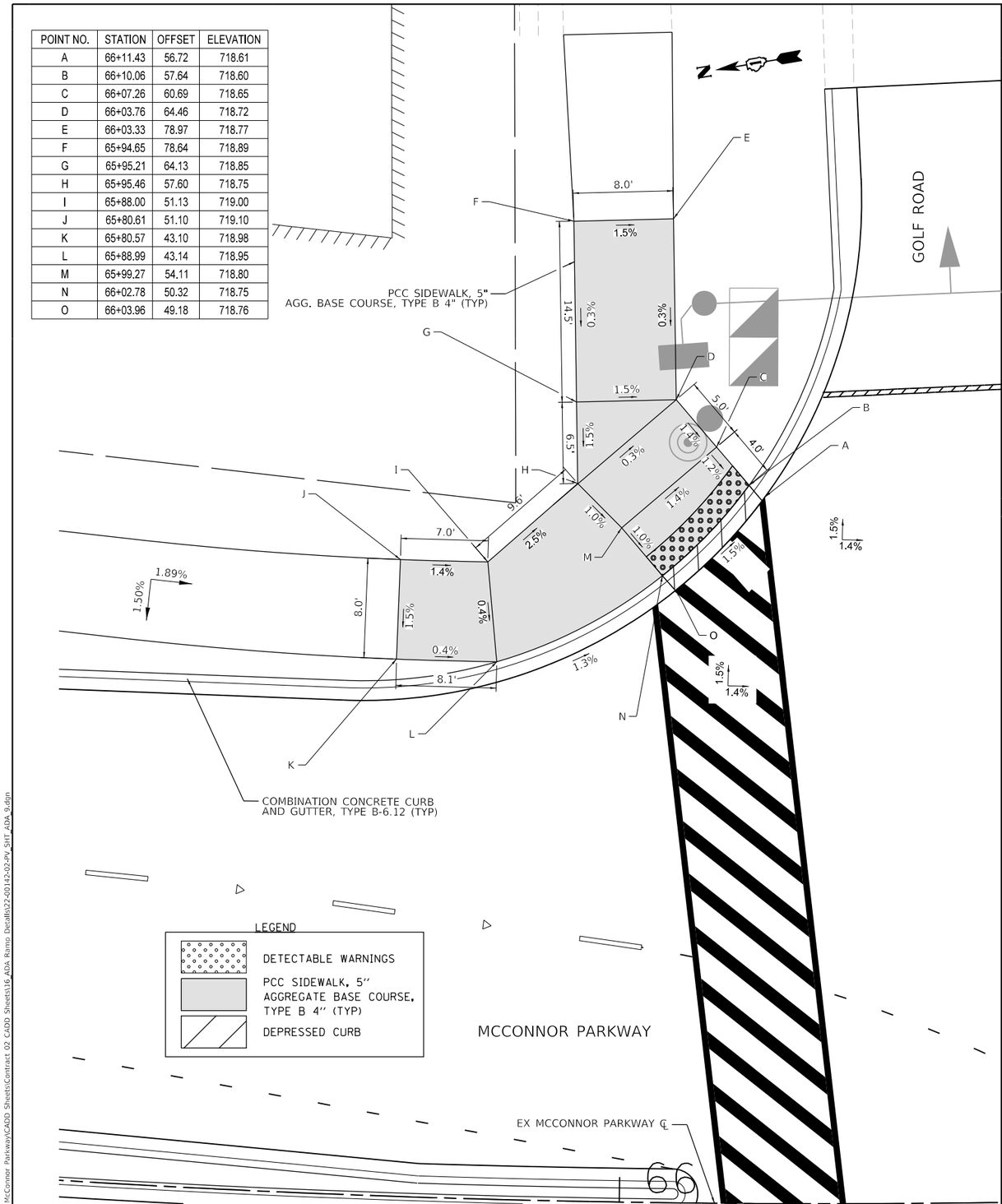

POINT NO.	STATION	OFFSET	ELEVATION
A	66+13.49	34.77	719.17
B	66+13.42	36.37	719.16
C	66+13.72	43.43	719.25
D	66+14.26	56.31	719.89
E	66+14.47	61.31	719.96
F	66+22.01	61.06	719.93
G	66+34.02	60.79	719.55
H	66+36.35	60.88	719.56
I	66+35.44	55.76	719.46
J	66+33.88	55.79	719.45
K	66+21.83	56.06	719.86
L	66+21.38	43.11	719.22
M	66+21.25	39.34	719.17
N	66+21.21	37.52	719.18

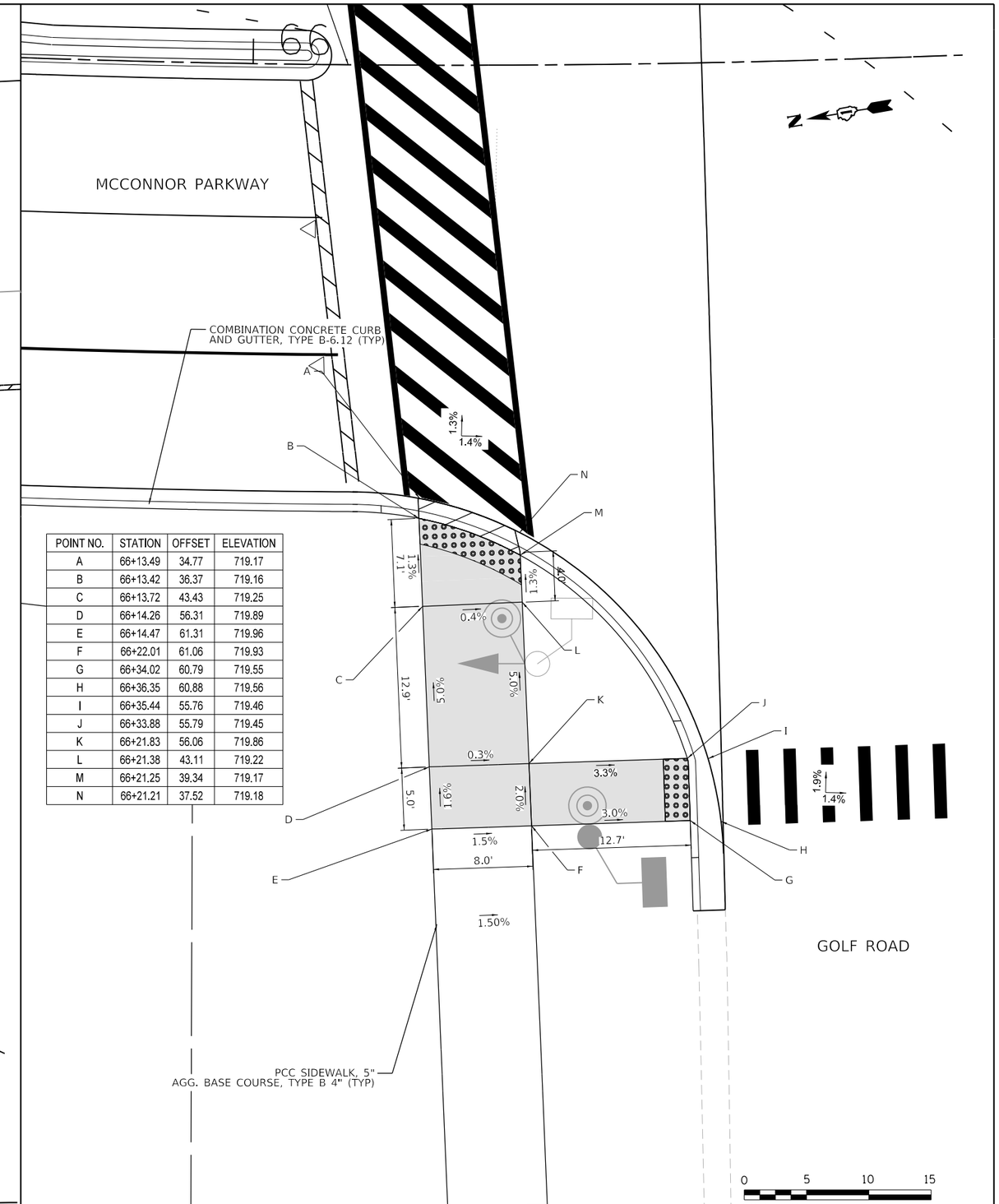

MODEL: Default
FILE NAME: F:\B61-078 VOS McConnor Parkway\CADD Sheets\Contract 02 CADD Sheets\16 ADA Ramp Details\22-00142-02-PV_SHT_ADA_9.dgn

BLA, Inc.

USER NAME = jrodriguez	DESIGNED - JR	REVISED -	
	DRAWN - JR	REVISED -	
PLOT SCALE = 10.0000 ' / in.	CHECKED - GJE	REVISED -	
PLOT DATE = 6/4/2025	DATE - 02/18/2025	REVISED -	

STATE OF ILLINOIS
DEPARTMENT OF TRANSPORTATION

MCCONNOR PARKWAY RECONSTRUCTION
ADA RAMP DETAILS

SCALE: 1" = 5' | SHEET 9 OF 10 SHEETS | STA. N/A TO STA. N/A

F.A.U. RTE.	SECTION	COUNTY	TOTAL SHEETS	SHEET NO.
7008	22-00142-02-PV	COOK	245	193
		CONTRACT NO. 61L38		
		ILLINOIS FED. AID PROJECT		

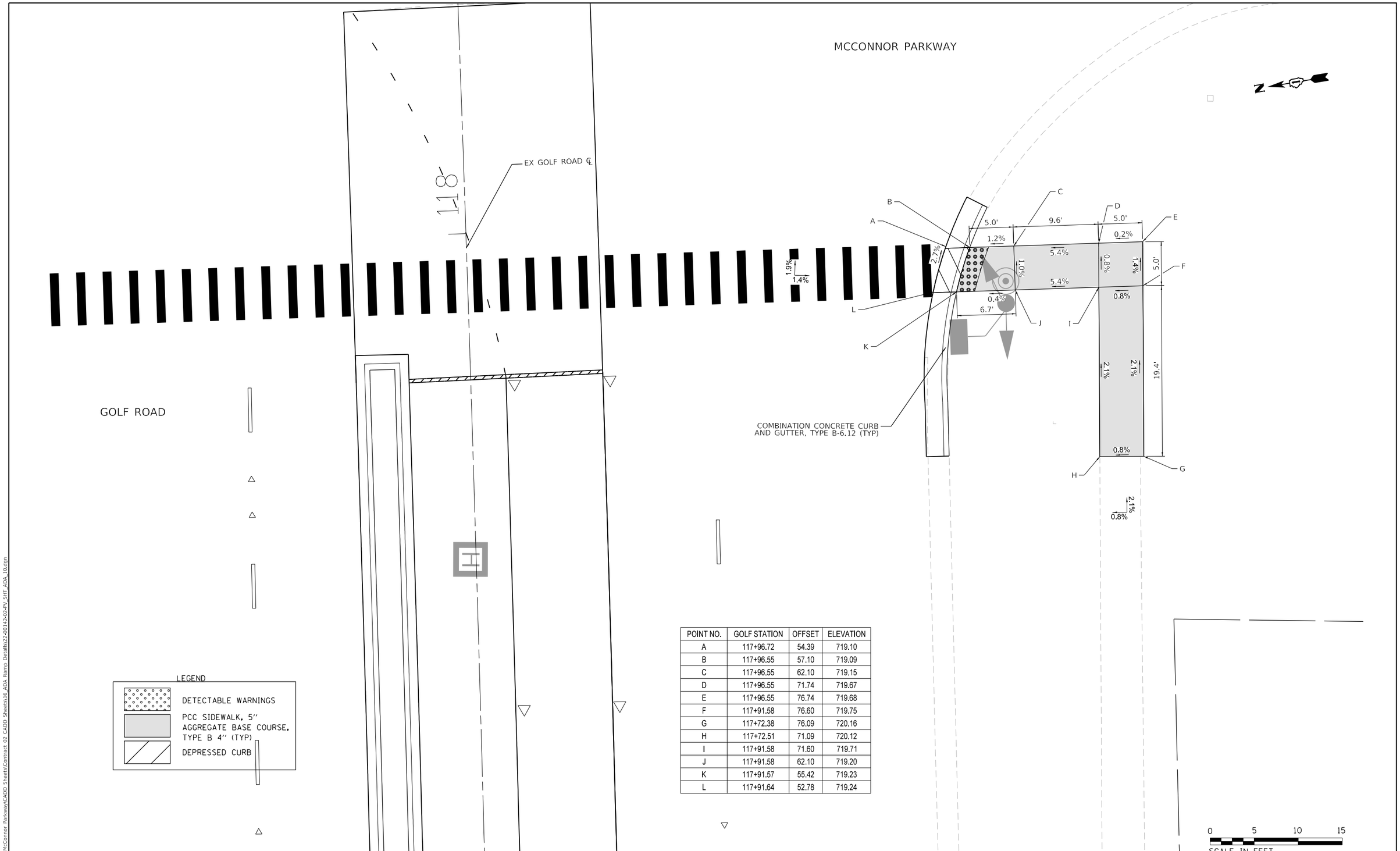

POINT NO.	GOLF STATION	OFFSET	ELEVATION
A	117+96.72	54.39	719.10
B	117+96.55	57.10	719.09
C	117+96.55	62.10	719.15
D	117+96.55	71.74	719.67
E	117+96.55	76.74	719.68
F	117+91.58	76.60	719.75
G	117+72.38	76.09	720.16
H	117+72.51	71.09	720.12
I	117+91.58	71.60	719.71
J	117+91.58	62.10	719.20
K	117+91.57	55.42	719.23
L	117+91.64	52.78	719.24

MODEL: Default
FILE NAME: P:\061-078 VOS McConnor Parkway\CADD Sheets\Contract 02 CADD Sheets\16 ADA Ramp Details\22-00142-02-PV_SHT_ADA_10.dgn

BLA, Inc.

USER NAME = jrodriguez	DESIGNED - JR	REVISED -	
	DRAWN - JR	REVISED -	
PLOT SCALE = 10.0000 ' / in.	CHECKED - GJE	REVISED -	
PLOT DATE = 6/4/2025	DATE - 02/18/2025	REVISED -	

STATE OF ILLINOIS
DEPARTMENT OF TRANSPORTATION

MCCONNOR PARKWAY RECONSTRUCTION
ADA RAMP DETAILS

SCALE: 1" = 5' | SHEET 10 OF 10 SHEETS | STA. N/A TO STA. N/A

F.A.U. RTE.	SECTION	COUNTY	TOTAL SHEETS	SHEET NO.
7008	22-00142-02-PV	COOK	245	194
		CONTRACT NO. 61L38		
		ILLINOIS FED. AID PROJECT		

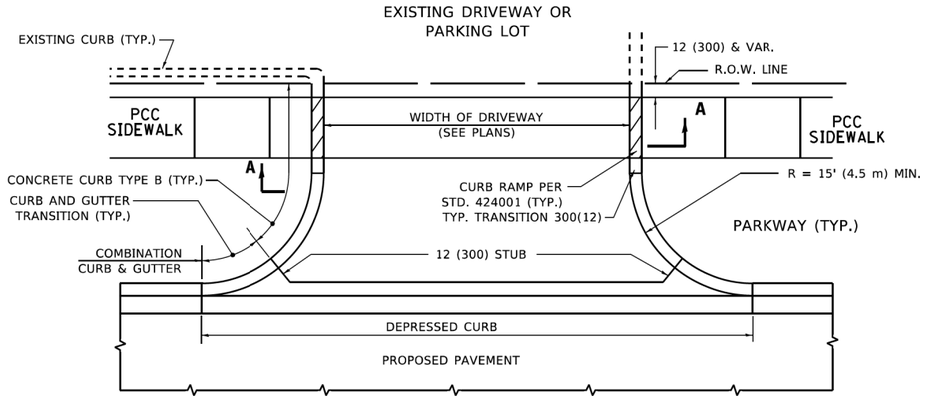

WITH CONCRETE CURB, TYPE B

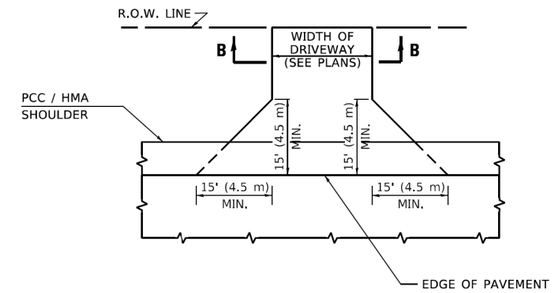

ADJACENT TO PCC /HMA SHOULDER

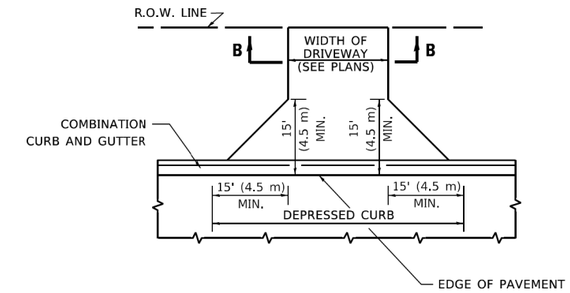

ADJACENT TO CURB AND GUTTER

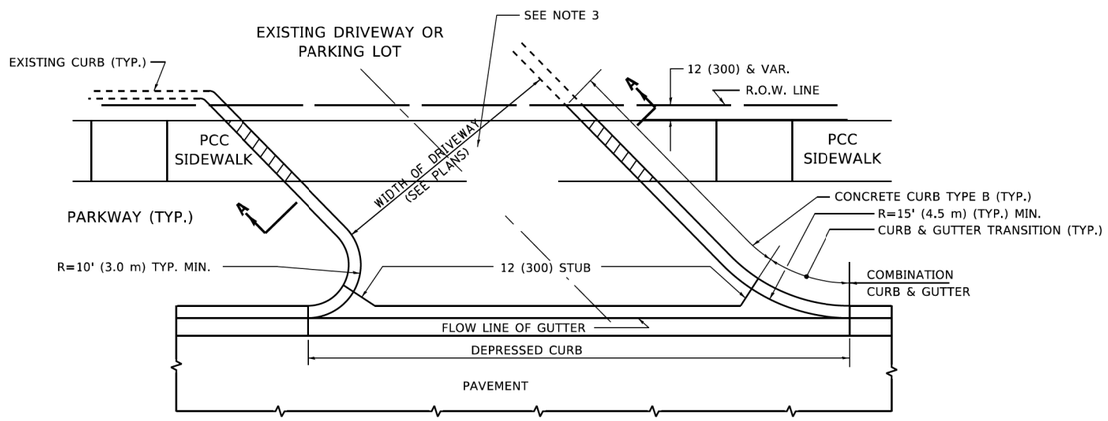

WITH CONCRETE CURB, TYPE B

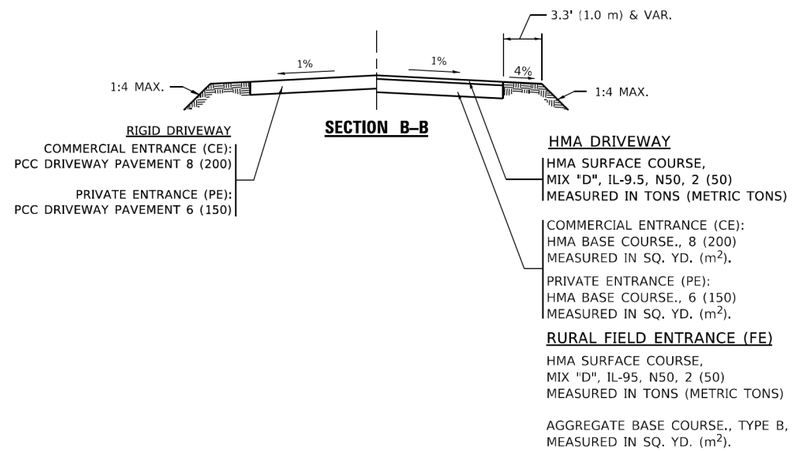

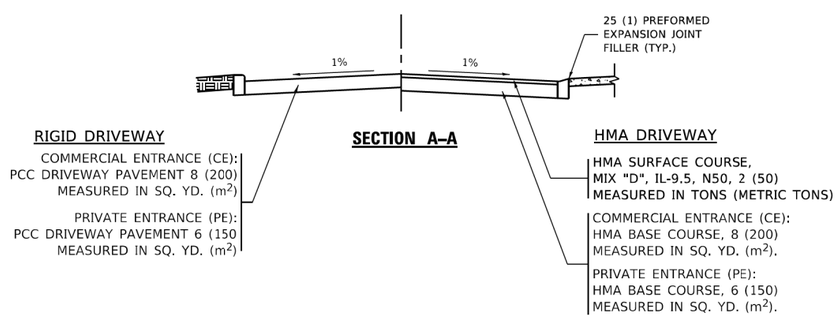

GENERAL NOTES

1. DRIVEWAY SLOPES, LOCATIONS, & GEOMETRIC LAYOUT SHALL BE IN ACCORDANCE WITH THE LATEST EDITION OF THE "HANDBOOK FOR POLICY ON PERMITS FOR ACCESS DRIVEWAYS TO STATE HIGHWAYS". FOR FURTHER LAYOUT REQUIREMENTS, REFER TO ILLUSTRATIONS IN THE PERMIT HANDBOOK. DRIVEWAYS SHALL BE REPLACED IN KIND, UNLESS OTHERWISE NOTED ON THE PLANS.

2. COMMERCIAL DRIVEWAYS SHALL BE CONSTRUCTED WITH CONCRETE CURB, TYPE B RETURNS EXCEPT WHEN THE SIDEWALK EDGE IS 4 FEET (1.2 METERS) OR LESS FROM THE BACK OF CURB, CONSTRUCT A FLARE DRIVEWAY WITHOUT CURB.

ALL DIMENSIONS ARE IN INCHES (MILLIMETERS) UNLESS OTHERWISE NOTED.

MODEL: Default
FILE NAME: pw:\\ildot-pw.bentley.com:PWIDOT\Documents\IDOT Offices\District 1\Projects\DistStd22x34\CADData\CADsheets\bd01.dgn

USER NAME = Lawrence.DeManche	DESIGNED - R. SHAH	REVISED - R. BORO 06-11-08	
	DRAWN -	REVISED - R. BORO 09-06-11	
PLOT SCALE = 100.0000 ' / in.	CHECKED -	REVISED - K. SMITH 08-28-19	
PLOT DATE = 11/18/2022	DATE - 11-04-95	REVISED - K. SMITH 11-18-22	

STATE OF ILLINOIS
DEPARTMENT OF TRANSPORTATION

DRIVEWAY DETAILS – DISTANCE BETWEEN R.O.W. AND FACE OF CURB & EDGE OF SHOULDER ≥15'(4.5m)

SCALE: NONE | SHEET 1 OF 1 SHEETS | STA. N/A TO STA. N/A

F.A.U RTE.	SECTION	COUNTY	TOTAL SHEETS	SHEET NO.
7008	22-00142-02-PV	COOK	245	195
	BD400-01 (BD-01)	CONTRACT NO. 61L38		
		ILLINOIS FED. AID PROJECT		

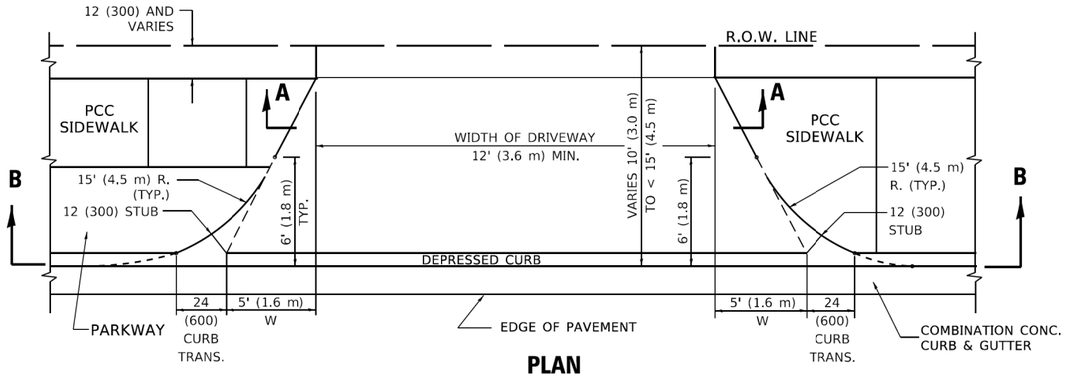

PLAN

10' (3.0 m) TO < 15' (4.5 m)

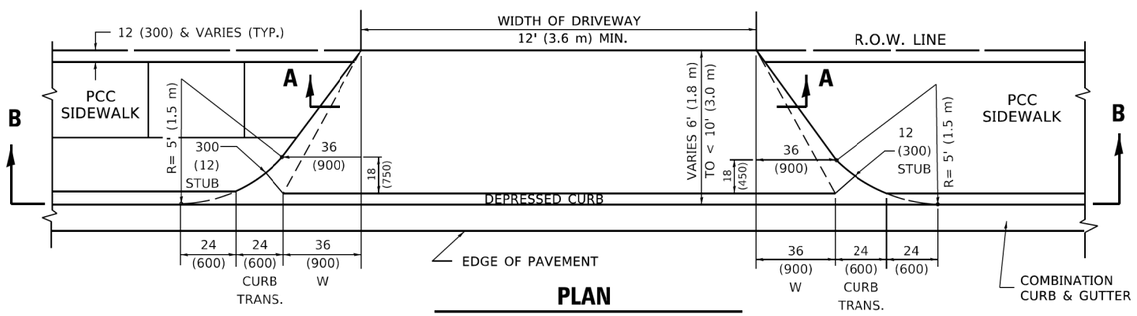

PLAN

6' (1.8 m) TO < 10' (3.0 m)

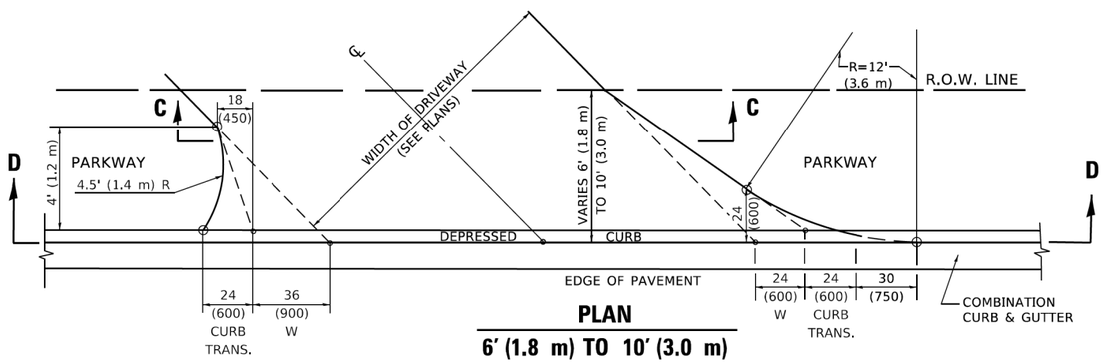

PLAN

6' (1.8 m) TO 10' (3.0 m)

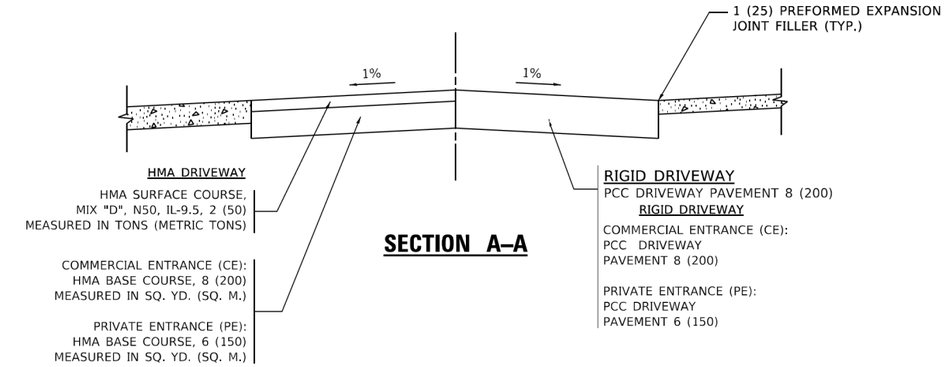

SECTION A–A

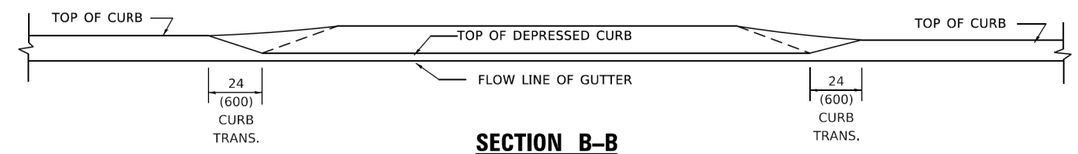

SECTION B–B

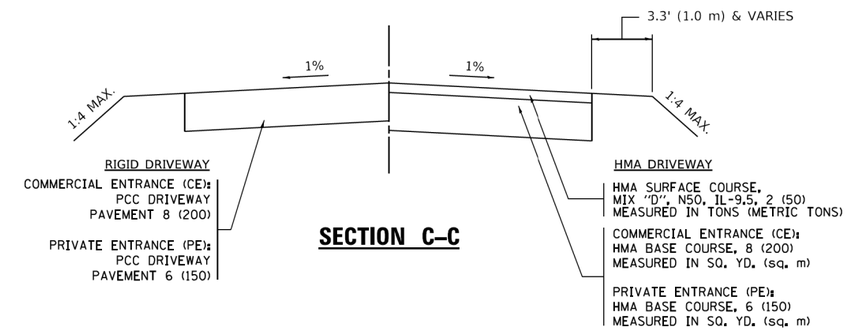

SECTION C–C

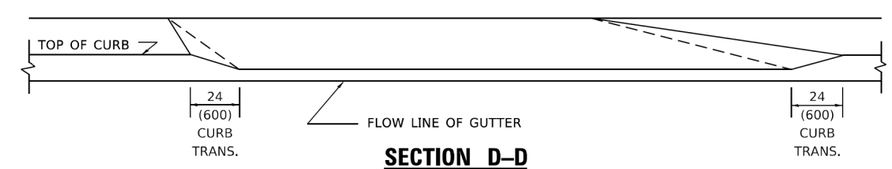

SECTION D–D

GENERAL NOTES

1. DRIVEWAY SLOPES, LOCATIONS, & GEOMETRIC LAYOUT SHALL BE IN ACCORDANCE WITH THE LATEST EDITION OF THE "HANDBOOK FOR POLICY ON PERMITS FOR ACCESS DRIVEWAYS TO STATE HIGHWAYS". FOR FURTHER LAYOUT REQUIREMENTS, REFER TO ILLUSTRATION 10 IN THE PERMIT HANDBOOK. WHERE SIDEWALKS EXIST, DRIVEWAYS SHALL BE REPLACED WITH RIGID PAVEMENT. WHERE NO SIDEWALKS EXIST, DRIVEWAYS SHALL BE REPLACED IN KIND. SIDEWALK CROSS SLOPE THRU DRIVEWAY AREA TO BE A MAXIMUM OF 1:50.
2. WHEN THE DISTANCE BETWEEN R.O.W. AND THE BACK OF CURB IS EQUAL TO OR LESS THAN 8' (2.4 m), THE PCC SIDEWALK SHALL EXTEND TO THE BACK OF CURB.
3. "W" VARIES FROM 36 (900) TO 5' (1.5 m) PROPORTIONAL TO THE LENGTH (L), FROM 6' (1.8 m) TO 10' (3 m).

ALL DIMENSIONS ARE IN INCHES (MILLIMETERS) UNLESS OTHERWISE NOTED.

MODEL: Default
FILE NAME: pw:\\ildot-pw.bentley.com:PWIDOT\Documents\IDOT Offices\District 1\Projects\Dist\d22x34\CADData\CADsheets\bd02.dgn

USER NAME = Lawrence.DeManche	DESIGNED - R. SHAH	REVISED - R. BORO 01-01-07	
	DRAWN -	REVISED - R. BORO 09-06-11	
PLOT SCALE = 100.0000 ' / in.	CHECKED -	REVISED - K. SMITH 08-27-19	
PLOT DATE = 11/18/2022	DATE - 11-06-95	REVISED - K. SMITH 11-18-22	

STATE OF ILLINOIS
DEPARTMENT OF TRANSPORTATION

DRIVEWAY DETAILS
DISTANCE BETWEEN ROW AND FACE OF CURB < 15' (4.5m)

SCALE: NONE | SHEET 1 OF 1 SHEETS | STA. N/A | TO STA. N/A

F.A.U RTE.	SECTION	COUNTY	TOTAL SHEETS	SHEET NO.
7008	22-00142-02-PV	COOK	245	196
	BD400-02 (BD-02)	CONTRACT NO. 61L38		
		ILLINOIS	FED. AID PROJECT	

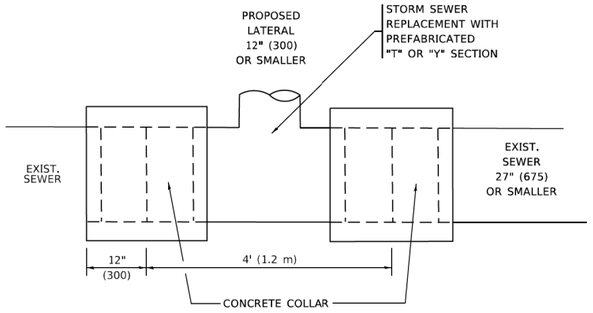

DETAIL "A"

LATERAL CONNECTION TO EXISTING SEWER
OF 27" (675) OR SMALLER

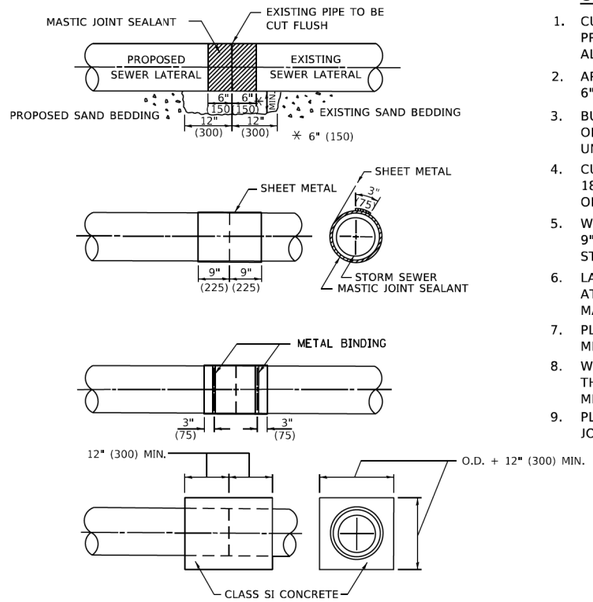

DETAIL "B"

CLASS SI CONCRETE COLLAR

CONSTRUCTION SEQUENCE

1. CUT THE EXISTING END OF THE PIPE SO AS TO PRESENT A FLUSH BUTT JOINT. BRUSH AND CLEAN ALL PIPES.
2. APPLY THE MASTIC JOINT SEALANT TO THE FIRST 6" (150) OF EACH PIPE.
3. BUTT THE PIPES TOGETHER LEAVING A MINIMUM OF 12' x 6' (300 x 150) DEEP EXCAVATION UNDER AND AROUND EACH PIPE END.
4. CUT A PIECE OF SHEET METAL GAGE NO. 19 1.1 (0.0418) 18" (450) WIDE BY THE OUTSIDE CIRCUMFERANCE OF THE PIPE PLUS 3" (75) LONG.
5. WRAP THE SHEET METAL AROUND THE PIPES, 9" (225) ON EACH SIDE OF THE JOINT, STARTING AT THE TOP OF THE PIPE.
6. LAP THE SHEET METAL AT LEAST 3" (75) AT THE TOP OF THE PIPE AND PLACE THE MASTIC JOINT SEALANT BETWEEN THE LAP.
7. PLACE TWO METAL BANDS AROUND THE SHEET METAL AND TIGHTEN.
8. WIPE OFF ANY EXCESS MASTIC JOINT SEALANT THAT OOZES OUT FROM BETWEEN THE SHEET METAL AND THE PIPES.
9. PLACE CLASS SI CONCRETE AROUND THE JOINT.

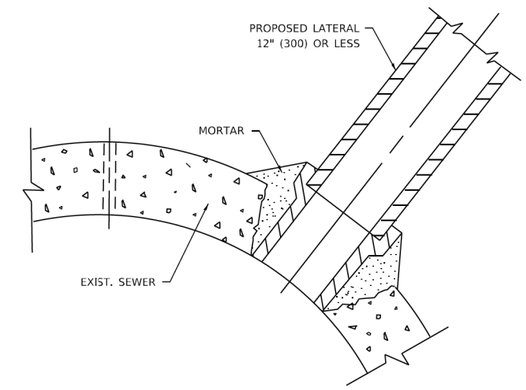

DETAIL "C"

PROPOSED LATERAL
CONNECTION TO EXISTING SEWER
OF 30" (750) OR LARGER

NOTES:

MATERIAL

MATERIAL USED FOR THE TEE OR WYE SECTION SHALL BE COMPATIBLE WITH THE EXISTING STORM SEWER OR THE PROPOSED STORM SEWER.

CONSTRUCTION METHODS

I. THIS WORK SHALL BE CONSTRUCTED IN CONFORMANCE WITH THE APPLICABLE PORTIONS OF SECTION 550 OF THE STANDARD SPECIFICATIONS.

II. CONNECTION TO AN EXISTING STORM SEWER SHALL BE BY EITHER OF THE FOLLOWING METHODS:
A) PROPOSED STORM SEWER CONNECTION TO EXISTING SEWER OF 27" (675) OR SMALLER SEE DETAIL "A" AND "B".
B) PROPOSED STORM SEWER CONNECTION TO EXISTING SEWER OF 30" (750) OR LARGER SEE DETAIL "C".

IF THE EXISTING SEWER PIPE IS CRACKED, BROKEN OR OTHERWISE DAMAGED BY THE CONTRACTOR IN MAKING THE CIRCULAR OPENING, THE CONTRACTOR SHALL REPLACE THAT SECTION OF PIPE WITH PIPE EQUAL AND SIMILAR IN ALL RESPECTS TO THE PIPE IN THE EXISTING SEWER, IN A CAREFUL WORKMANLIKE MANNER, WITHOUT EXTRA COMPENSATION.

GENERAL

1. CARE MUST BE TAKEN TO PREVENT DEBRIS FROM ENTERING THE SEWER. ALL DEBRIS WHICH ENTERS THE SEWER MUST BE REMOVED. THE SEWER MUST BE LEFT CLEAN AND UNOBSTRUCTED UPON COMPLETION OF THE CONTRACT.
2. CARE MUST BE TAKEN TO PREVENT ANY PART OF THE NEW PIPE CONNECTION FROM PROJECTING INTO THE EXISTING SEWER.

BASIS OF PAYMENT

1. TEE OR WYE CONNECTIONS SHALL BE PAID FOR AT THE CONTRACT UNIT PRICE EACH FOR STORM SEWER TEE OR WYE OF THE TYPE AND SIZE SPECIFIED IN THE PLANS, THIS PRICE SHALL INCLUDE ALL EXCAVATION OF THE TRENCH, REMOVAL OF THE EXISTING STORM SEWER, FURNISHING AND INSTALLING THE SPECIFIED TEE OR WYE SECTION, FURNISHING AND INSTALLING THE REQUIRED CONCRETE COLLAR, AND ALL OTHER MATERIAL NECESSARY TO COMPLETE THIS WORK AS SHOWN AND SPECIFIED.
2. REMOVAL AND REINSTALLATION OF EXISTING STORM SEWER ADJACENT TO THE PROPOSED TEE OR WYE SECTION, FOR THE PURPOSE OF FACILITATING THE INSTALLATION OF THE TEE OR WYE SECTION, WILL NOT BE PAID FOR SEPARATELY BUT SHALL BE INCLUDED IN THE UNIT PRICE BID FOR THE WORK.
3. TRENCH BACKFILL, EXCAVATION IN ROCK AND REMOVAL AND REPLACEMENT OF UNSUITABLE MATERIAL BELOW PLAN BEDDING GRADE WILL BE PAID FOR SEPARATELY.
4. CONCRETE COLLAR FOR CONNECTING A PROPOSED STORM SEWER TO AN EXISTING STORM SEWER WILL NOT BE PAID PAID FOR SEPARATELY BUT SHALL BE INCLUDED IN THE COST OF THE PROPOSED STORM SEWER.

* ALL DIMENSIONS ARE IN INCHES (MILLIMETERS) UNLESS OTHERWISE SHOWN.

USER NAME = Lawrence.DeManche	DESIGNED - M. DE YONG	REVISED - R. SHAH 09-09-94	STATE OF ILLINOIS DEPARTMENT OF TRANSPORTATION	DETAIL OF STORM SEWER CONNECTION TO EXISTING SEWER
	DRAWN -	REVISED - R. SHAH 10-25-94		
PLOT SCALE = 100.0000 ' / in.	CHECKED -	REVISED - R. SHAH 06-12-96		
PLOT DATE = 11/18/2022	DATE - 07-25-90	REVISED - K. SMITH 11-18-22		SCALE: NONE · SHEET 1 OF 1 SHEETS · STA. N/A TO STA. N/A

F.A.U RTE.	SECTION	COUNTY	TOTAL SHEETS	SHEET NO.
7008	22-00142-02-PV	COOK	245	197
	BD500-01 (BD-07)	CONTRACT NO. 61L38		
		ILLINOIS FED. AID PROJECT		

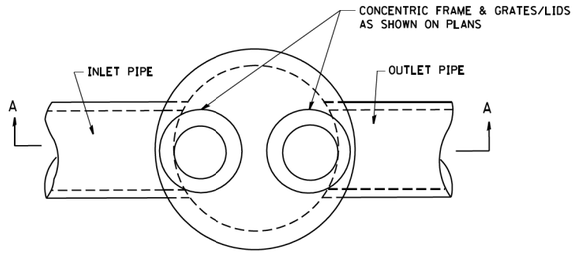

PLAN

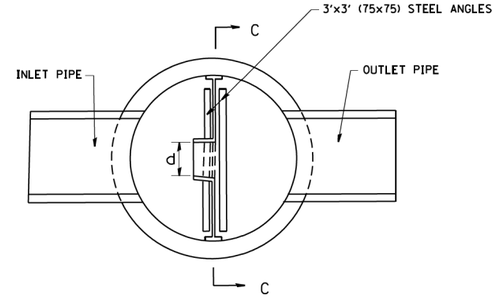

SECTION B-B

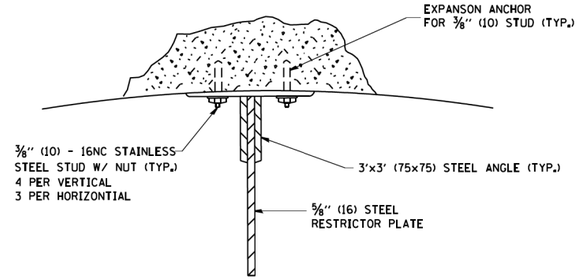

ANGLE FASTENER DETAIL

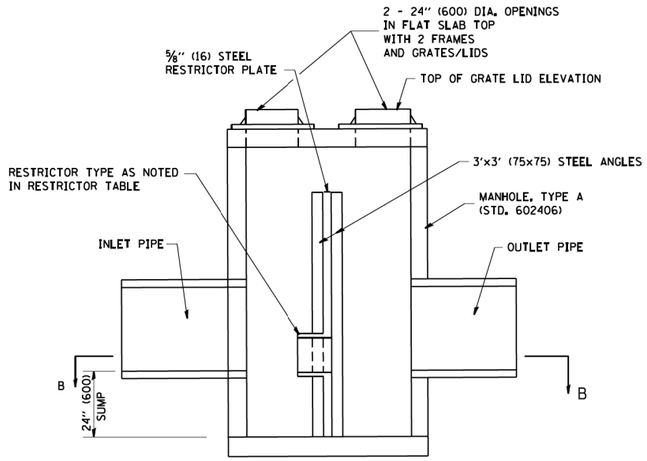

SECTION A-A

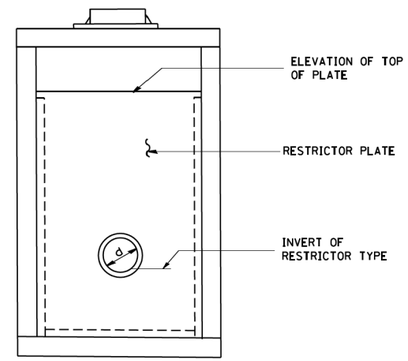

SECTION C-C

NOTES:

1. ALL STEEL ANGLES AND PLATES TO BE GALVANIZED AFTER FABRICATION.
2. ALL RESTRICTOR PLATES, ANGLES AND HARDWARE TO BE INCLUDED IN THE COST OF THE MANHOLE.
3. BASIS OF PAYMENT: "MANHOLES ,TYPE A, 6 FT. (1.8 m)-DIAMETER, TYPE 1 FRAME, CLOSED LID, RESTRICTOR PLATE" EACH

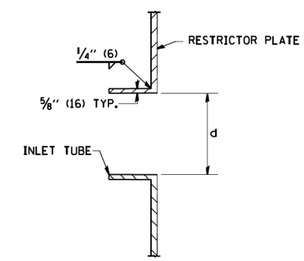

INLET TUBE DETAIL

STATION	MANHOLE DIAMETER	FRAME AND GRATE	RESTRICTOR TYPE	INSIDE RESTRICTOR TYPE DIAMETER in. (mm) (d)	INVERT OF RESTRICTOR TYPE	ELEVATION OF TOP OF PLATE OVERFLOW
117+74.25	6'	TYPE 1 CL (2)	2-SHARP EDGED	4"	714.22	717.59
* 65+49.85	6'	TYPE 1 CL (2)	2-SHARP EDGED	6.5'X2'	710.53	717.60

*SEE S1312 RESTRICTOR MANHOLE DETAIL

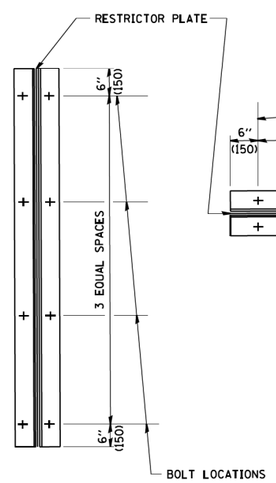

TYPICAL VERTICAL ANGLES
LOOKING TOWARD MANHOLE WALL

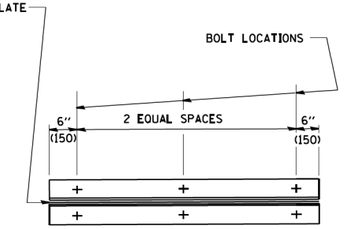

TYPICAL HORIZONTIAL
ANGLES LOOKING TOWARD
BOTTOM OF MANHOLE

TOTAL BOLTS REQUIRED: 22

NOTE:

1. ANGLES SHOULD BE 3x3x3/8 (75x75x75)
2. VERTICAL ANGLES SHOULD EXTEND FROM THE BOTTOM OF THE RESTRICTOR PLATE TO THE TOP.
3. HORIZONTIAL ANGLES SHOULD EXTEND FROM VERTICAL ANGLE TO VERTICAL ANGLE.

STEEL ANGLE BOLTING DETAILS

RESTRICTOR TYPE					
1	2	3	4	5	6
RE-ENTRANT TUBE	SHARP EDGED	SQUARE EDGED	RE-ENTRANT TUBE	SQUARE EDGED	ROUNDED
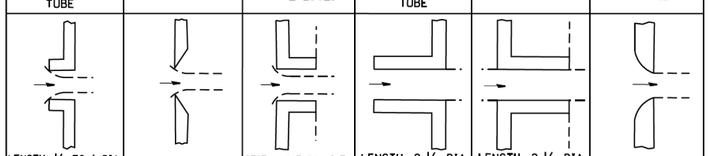					
LENGTH: 1/2 TO 1 DIA.		STREAM CLEARS SIDES	LENGTH: 2-1/2 DIA.	LENGTH: 2-1/2 DIA.	
C=.52	C=.61	C=.61	C=.73	C=.82	C=.98

VALUES OF "C" FOR CIRCULAR
AND SQUARE ORIFICES

ALL DIMENSIONS ARE IN INCHES (MILLIMETERS) UNLESS OTHERWISE SHOWN.

FILE NAME = W:\diststd\22x34\bd12.dgn	USER NAME = gaglianobt	DESIGNED - R. SHAH	REVISED - R. SHAH 10-25-94
		DRAWN -	REVISED - E. GOMEZ 08-28-00
	PLOT SCALE = 50.000 ' / IN.	CHECKED -	REVISED - M. GOMEZ 01-08-01
	PLOT DATE = 1/4/2008	DATE - 09-09-94	REVISED -

STATE OF ILLINOIS
DEPARTMENT OF TRANSPORTATION

MANHOLE WITH RESTRICTOR PLATE

SCALE: NONE | SHEET NO. 1 OF 1 SHEETS | STA. N/A | TO STA. N/A

F.A. RTE.	SECTION	COUNTY	TOTAL SHEETS	SHEET NO.
			245	198
BD600-04	(BD-12)	CONTRACT NO. 61L38		
FED. ROAD DIST. NO. 1	ILLINOIS	FED. AID PROJECT		

METHOD OF MEASUREMENT

REFER TO SECTION 442 OF THE STANDARD SPECIFICATIONS FOR ROAD AND BRIDGE CONSTRUCTION AND THE RECURRING SPECIAL PROVISION "PATCHING WITH HOT-MIX ASPHALT OVERLAY REMOVAL."

BASIS OF PAYMENT

1. REFER TO SECTION 442 OF THE STANDARD SPECIFICATIONS FOR ROAD AND BRIDGE CONSTRUCTION AND THE RECURRING SPECIAL PROVISION "PATCHING WITH HOT-MIX ASPHALT OVERLAY REMOVAL."
2. SAW CUT/SCORING OF EXISTING HMA OVERLAY IS INCLUDED IN THE COST OF PAVEMENT PATCHING.
3. SAW CUT/SCORING OF EXISTING PAVEMENT IS INCLUDED IN THE COST OF PAVEMENT PATCHING.

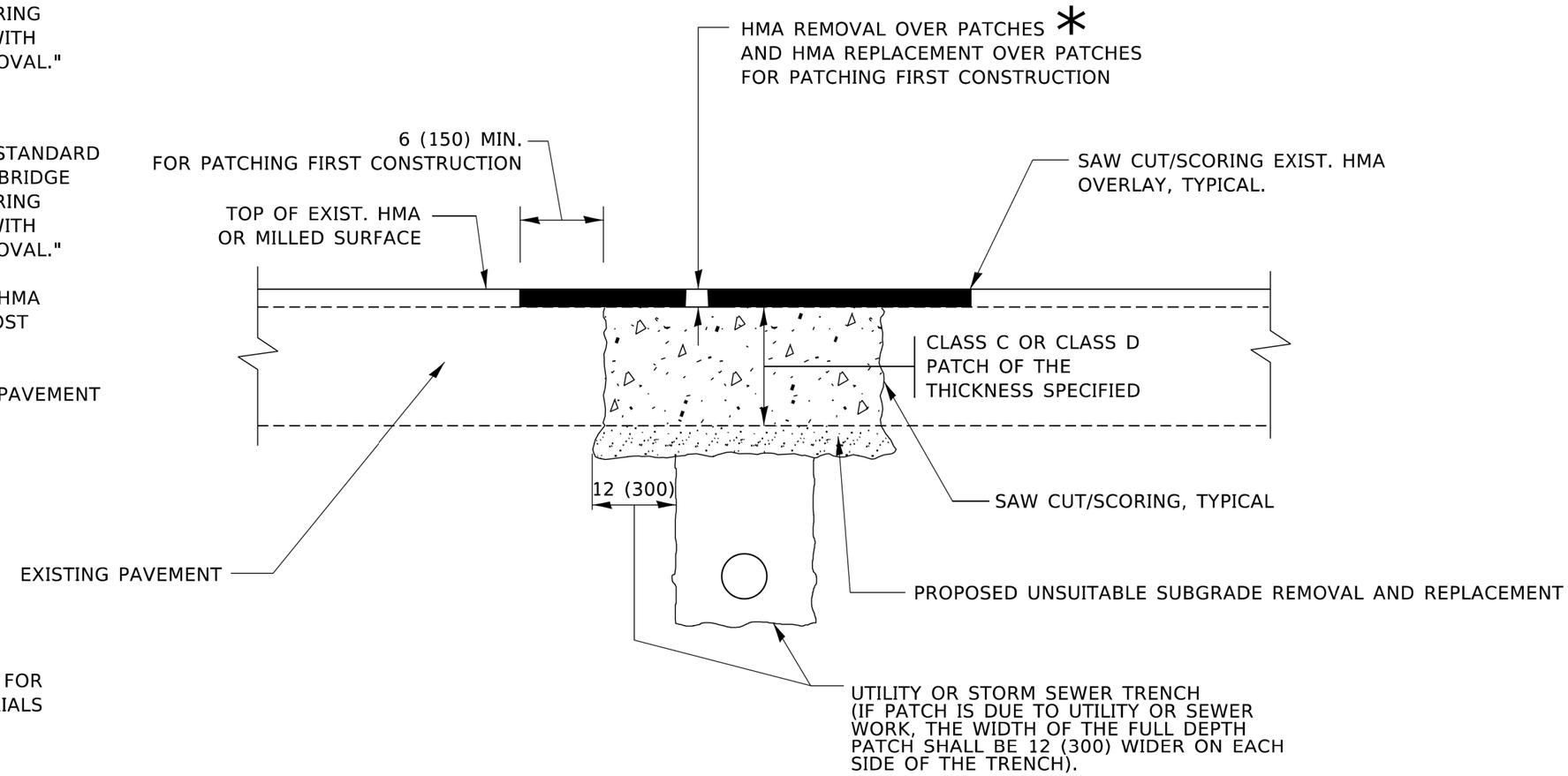

* SEE TYPICAL SECTIONS FOR THICKNESS AND MATERIALS

SEQUENCE OF CONSTRUCTION (PATCHING FIRST)

1. REMOVE THE EXISTING HMA MATERIAL OVER THE AREA TO BE PATCHED.
2. REMOVE AND REPLACE WITH CLASS C OR D PATCH.
3. REPLACE HMA MATERIAL OVER THE AREA TO BE PATCHED.

SEQUENCE OF CONSTRUCTION (MILLING FIRST)

1. MILL HMA FIRST IF THERE IS AT LEAST 4½ INCHES OR MORE OF HMA MATERIAL ON TOP OF THE EXISTING PAVEMENT OR IF THE PAVEMENT IS FULL DEPTH HMA. A MINIMUM OF 2 INCHES OF HMA MATERIAL SHALL BE IN PLACE AFTER MILLING.
2. REMOVE AND REPLACE WITH FULL DEPTH CLASS D PATCHES TO TOP OF MILLED SURFACE.

ALL DIMENSIONS ARE IN INCHES (MILLIMETERS) UNLESS OTHERWISE SHOWN.

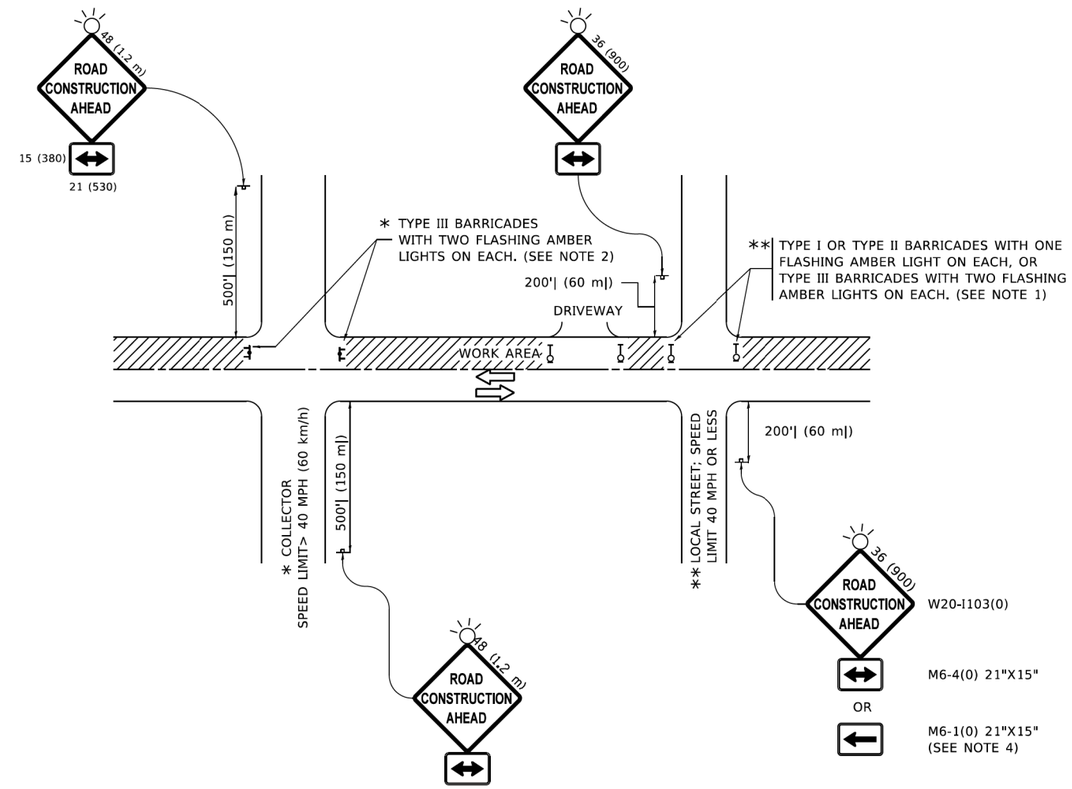

NOTES:

1. SIDE ROAD WITH A SPEED LIMIT OF 40 MPH (60 km/h) OR LESS AS SHOWN ON THE DRAWING AND AS DIRECTED BY THE ENGINEER:

   a) ONE "ROAD CONSTRUCTION AHEAD" SIGN 36 x 36 (900x900) WITH A FLASHER MOUNTED ON IT APPROXIMATELY 200' (60 m) IN ADVANCE OF THE MAIN ROUTE.

   b) THE CLOSED PORTION OF THE MAIN ROUTE SHALL BE PROTECTED BY BLOCKING WITH TYPE I, TYPE II OR TYPE III BARRICADES, 1/3 OF THE CROSS SECTION OF THE CLOSED PORTION.

2. SIDE ROAD WITH A SPEED LIMIT GREATER THAN 40 MPH (60 km/h) AS SHOWN ON THE DRAWING AND AS DIRECTED BY THE ENGINEER:

   a) ONE "ROAD CONSTRUCTION AHEAD" SIGN 48 x 48 (1.2 m x 1.2 m) WITH A FLASHER MOUNTED ON IT APPROXIMATELY 500' (150 m) IN ADVANCE OF THE MAIN ROUTE.

   b) THE CLOSED PORTION OF THE MAIN ROUTE SHALL BE PROTECTED BY BLOCKING WITH TYPE III BARRICADES, 1/2 OF THE CROSS SECTION OF THE CLOSED PORTION.

3. CONES MAY BE SUBSTITUTED FOR BARRICADES OR DRUMS AT HALF THE SPACING DURING DAY OPERATIONS. CONES SHALL BE A MINIMUM OF 28 (710) IN HEIGHT.

4. WHEN THE SIDE ROAD LIES BETWEEN THE BEGINNING OF THE MAINLINE SIGNING AND THE WORK ZONE, A SINGLE HEADED ARROW (M6-1) SHALL BE USED IN LIEU OF THE DOUBLE HEADED ARROW (M6-4).

5. WHEN WORK IS BEING PERFORMED ON A SIDE ROAD OR DRIVEWAY, FOLLOW THE APPLICABLE STANDARD(S). THE DIRECTIONAL ARROW (M6-1 OR M6-4) SHALL BE COVERED OR REMOVED WHEN NO LONGER CONSISTENT WITH THE TRAFFIC CONTROL SET-UP.

6. ADVANCE WARNING SIGNS ARE TO BE OMITTED ON DRIVEWAYS UNLESS OTHERWISE SPECIFIED IN THE PLANS OR BY THE ENGINEER.

7. THE TRAFFIC CONTROL AND PROTECTION FOR SIDE ROADS, INTERSECTIONS, AND DRIVEWAYS SHALL BE INCLUDED IN THE COST OF SPECIFIED TRAFFIC CONTROL STANDARDS OR ITEMS.

All dimensions are in inches (millimeters) unless otherwise shown.

MODEL: Default
FILE NAME: pw://ildot-pw.bentley.com:PWIDOT\Documents\IDOT Offices\District 1\Projects\Dist\5022x34\CADData\CADsheets\tc10.dgn

USER NAME = Lawrence.DeManche	DESIGNED - L.H.A.	REVISED - T. RAMMACHER 01-06-00	STATE OF ILLINOIS DEPARTMENT OF TRANSPORTATION
	DRAWN -	REVISED - A. SCHUETZE 07-01-13	
PLOT SCALE = 100.0000 ' / in.	CHECKED -	REVISED - A. SCHUETZE 09-15-16	
PLOT DATE = 5/3/2024	DATE - 06-89	REVISED - D. SENDERAK 05-03-24	

TRAFFIC CONTROL AND PROTECTION FOR SIDE ROADS, INTERSECTIONS, AND DRIVEWAYS

SCALE: NONE | SHEET 1 OF 1 SHEETS | STA. N/A TO STA. N/A

F.A.U RTE.	SECTION	COUNTY	TOTAL SHEETS	SHEET NO.
7008	22-00142-02-PV	COOK	245	200
	TC-10	CONTRACT NO. 61L38		
		ILLINOIS FED. AID PROJECT		