Illinois Department of Transportation
Division of Highways
Illinois Department of Transportation/D-2

SOIL BORING LOG

Page 1 of 1

Date 6/16/08

ROUTE FAP 301 DESCRIPTION P92--111-06 Bridge over the CC&P RR, .3 m. W. of Perryville Road LOGGED BY W. Garza

SECTION (201-3), K (4-1, 5) K LOCATION Cherry Valley Twp. - 10 NE, SEC., TWP. 43N, RNG. 2E

COUNTY Winnebago DRILLING METHOD Hollow Stem Auger HAMMER TYPE B-53 Diedrich Automatic

STRUCT. NO.
Station
BORING NO. B-1h
Station
Offset [redacted]
Ground Surface Elev. 769.20 ft

Surface Water Elev. ft
Stream Bed Elev. 72.50 ft

Groundwater Elev.:
First Encounter 754.2 ft ▼
Upon Completion ft
After Hrs. ft

Description	Elev.	DEPTH (ft)	BLOWS (/6")	UCS Qu (tsf)	MOIST (%)
MEDIUM dark brown LOAM				0.5 P	14.0
MEDIUM/STIFF brown LOAM	766.70		3 2 3	1.0 P	13.0
MEDIUM brown SILTY CLAY LOAM with SAND lens	765.20	-5	1 1 1	0.8 P	23.0
STIFF brown LOAM with SAND lens	762.70		1 1 3	1.1 B	18.0
VERY SOFT brown SILTY CLAY LOAM	760.20	-10	1 1 3	0.2 P	21.0
VERY LOOSE tan dirty moist SAND	757.20		0 1 1		
LOOSE tan dirty SAND	754.70	▼ 15	2 3 4		17.0
MEDIUM gray SANDY LOAM TILL	752.70		2 3 4	0.7 B	11.0
	750.20	-20			
MEDIUM tan LOAM TILL with SAND lens			2 3 12	0.5 B	13.0
VERY DENSE tan weathered LIMESTONE	747.20		13 20 65		
VERY DENSE tan weathered LIMESTONE	745.20	-25	100/2"		
Borehole continued with rock coring.	743.20	-40			

The Unconfined Compressive Strength (UCS) Failure Mode is indicated by (B-Bulge, S-Shear, P-Penetrometer)
The SPT (N value) is the sum of the last two blow values in each sampling zone (AASHTO T206)

BBS, from 137 (Rev. 8-99)

Illinois Department of Transportation
Division of Highways
Illinois Department of Transportation/D-2

ROCK CORE LOG

Page 1 of 1

Date 6/16/08

ROUTE FAP 301 DESCRIPTION P92--111-06 Bridge over the CC&P RR, .3 m. W. of Perryville Road LOGGED BY W. Garza

SECTION (201-3), K (4-1, 5) K LOCATION Cherry Valley Twp. - 10 NE, SEC., TWP. 43N, RNG. 2E

COUNTY Winnebago CORING METHOD

STRUCT. NO.
Station
BORING NO. B-1h
Station
Offset [redacted]
Ground Surface Elev. 769.20 ft

CORING BARREL TYPE & SIZE
Core Diameter 2 in
Top of Rock Elev. 747.20 ft
Begin Core Elev. 743.20 ft

Description	Elev.	DEPTH (ft)	CORE (#)	RECOVERY (%)	R.Q.D. (%)	CORE TIME (min/ft)	STRENGTH (tsf)
Dolomite: yellow tan-buff, vuggy and pitted, very finely crystalline with chert inclusions. t.s.f.: 739.2 to 738.8	743.20		1	100	7		287.0
Dolomite: as above with fractured zone at 736.2. No testable segments.	738.20	-30	2	100	10		3.2
Dolomite: as above, though medium to massively bedded. t.s.f.: 732.3 to 731.8	733.20	-35	3	100	58	2	200.0
End of Boring	728.20	-40					
		-45					

Color pictures of the cores
Cores will be stored for examination until
The "Strength" column represents the uniaxial compressive strength of the core sample (ASTM D-2938)

BBS, form 138 (Rev. 8-99)

Illinois Department of Transportation
Division of Highways
Illinois Department of Transportation/D-2

SOIL BORING LOG

Page 1 of 2

Date 6/17/08

ROUTE FAP 301 DESCRIPTION P92-111-06 Bridge over the CC&P RR, .3 m. W. of Perryville Road LOGGED BY W. Garza

SECTION (201-3), K (4-1, 5) K LOCATION Cherry Valley Twp. - 10 NE, SEC., TWP. 43N, RNG. 2E

COUNTY Winnebago DRILLING METHOD Hollow Stem Auger HAMMER TYPE B-53 Diedrich Automatic

STRUCT. NO.
Station
BORING NO. B-2h
Station
Offset [redacted]
Ground Surface Elev. 795.10 ft

Surface Water Elev. ft
Stream Bed Elev. 72.50 ft

Groundwater Elev.:
First Encounter 750.1 ft ▼
Upon Completion ft
After Hrs. ft

Description	Elev.	DEPTH (ft)	BLOWS (/6")	UCS Qu (tsf)	MOIST (%)
STIFF dark brown LOAM				1.8 P	11.0
MEDIUM brown SANDY LOAM	792.60		2 3 3	0.8 P	16.0
MEDIUM gray SILTY LOAM with brown SAND lens	791.10	-5	2 3 3	0.6 P	22.0
MEDIUM gray SANDY LOAM	788.60		2 3 6	0.9 B	17.0
STIFF gray SANDY LOAM	786.10	-10	5 5 6	1.1 S	10.0
SOFT gray LOAM with SAND lens	783.60		2 2 3	0.4 B	23.0
VERY STIFF gray/tan SILTY CLAY LOAM	781.10	-15	3 5 5	2.7 B	20.0
MEDIUM gray/brown SILTY CLAY LOAM	778.60		4 4 8	0.9 B	24.0
	776.10	-20			
VERY STIFF gray SILTY CLAY LOAM			4 4 6	2.5 B	19.0
MEDIUM gray SILTY CLAY LOAM	773.60		2 2 5	0.5 B	26.0
STIFF gray SILTY CLAY LOAM	771.10	-25	3 5 5	1.2 B	25.0
STIFF gray SILTY CLAY LOAM with SANDY LOAM lens	768.60		2 2 5	1.2 B	22.0
SOFT gray SILTY LOAM	766.10	-30	2 1 6	0.4 P	20.0
MEDIUM gray SANDY LOAM	763.60		6 8 10	0.7 B	13.0
STIFF gray LOAM with SAND lens	761.10	-35	3 9 10	1.1 P	15.0
MEDIUM dark gray LOAM	758.60		4 6 7	0.9 B	19.0
	756.10	-40			

The Unconfined Compressive Strength (UCS) Failure Mode is indicated by (B-Bulge, S-Shear, P-Penetrometer)
The SPT (N value) is the sum of the last two blow values in each sampling zone (AASHTO T206)

BBS, from 137 (Rev. 8-99)

BORING B-1h

Station: 2648+67.50
Offset from ℄ I-39: 85.33' Rt.

BORING B-2h

Station: 2649+31.16
Offset from ℄ I-39: 17.58' Rt.

MODEL: SHEET
FILE NAME: c:\pwworking\benesch projects\projects\d0173871\D264C24_SHT_0208-0209-CN_BORING-LOG-1.dgn

Bowman 10 S. LaSalle Street, Suite 2710 Chicago, Illinois 60603 312-454-0160 www.bowman.com

USER NAME = lfranceschina	DESIGNED - JW	REVISED -	
	DRAWN - DSO	REVISED -	
PLOT SCALE = $SCALE$	CHECKED - AJN	REVISED -	
PLOT DATE = 8/12/2024	DATE -	REVISED -	

STATE OF ILLINOIS
DEPARTMENT OF TRANSPORTATION

BORING LOGS 1
STRUCTURE NO. 101-0208/0209

SCALE: SHEET 58 OF 60 SHEETS STA. TO STA.

F.A.I RTE.	SECTION	COUNTY	TOTAL SHEETS	SHEET NO.
*	(201-3)R & (4-1.5)R	WINNEBAGO	1685	601
		CONTRACT NO. 64C24		
	ILLINOIS	FED. AID PROJECT		

* FAI ROUTE 39 (I-39) & FAP 301 (US 20)

Illinois Department of Transportation
Division of Highways
Illinois Department of Transportation/D-2

SOIL BORING LOG

Page 2 of 2

Date 6/17/08

ROUTE FAP 301 DESCRIPTION P92-111-06 Bridge over the CC&P RR, .3 m. W. of Perryville Road LOGGED BY W. Garza

SECTION (201-3), K (4-1, 5) K LOCATION Cherry Valley Twp. - 10 NE, SEC., TWP. 43N, RNG. 2E

COUNTY Winnebago DRILLING METHOD Hollow Stem Auger HAMMER TYPE B-53 Diedrich Automatic

STRUCT. NO.
Station
BORING NO. B-2h
Station [redacted]
Offset
Ground Surface Elev. 795.10 ft

Surface Water Elev. ft
Stream Bed Elev. 72.50 ft

Groundwater Elev.:
First Encounter 750.1 ft ▼
Upon Completion ft
After Hrs. ft

Description	Elev.	DEPTH (ft)	BLOWS (/6")	UCS Qu (tsf)	MOIST (%)
VERY STIFF gray LOAM TILL			3 6 9	2.3 B	31.0
	753.10				
MEDIUM tan dirty moist SAND			10 11 14		
	750.60				
HARD gray SANDY LOAM TILL		▼45	11 23 29	4.2 S	9.0
	748.60				
VERY STIFF olive-green SANDY LOAM TILL			5 22 28	3.1 P	12.0
	745.60				
VERY DENSE tan weathered LIMESTONE		-50	100/6"		
	743.60				
VERY DENSE tan weathered LIMESTONE	742.60		100/1"		
Auger Refusal at 52.5' End of Boring		-55			
		-60			

The Unconfined Compressive Strength (UCS) Failure Mode is indicated by (B-Bulge, S-Shear, P-Penetration)
The SPT (N value) is the sum of the last two blow values in each sampling zone (AASHTO T206)

BBS, form 138 (Rev. 8-99)

BORING B-2h

Station: 2649+31.16
Offset from ℄ I-39: 17.58' Rt.

Illinois Department of Transportation
Division of Highways
Illinois Department of Transportation/D-2

SOIL BORING LOG

Page 1 of 1

Date 6/20/08

ROUTE FAP 301 DESCRIPTION P92-111-06 Bridge over the CC&P RR, .3 m. W. of Perryville Road LOGGED BY W. Garza

SECTION (201-3), K (4-1, 5) K LOCATION Cherry Valley Twp. - 10 NE, SEC., TWP. 43N, RNG. 2E

COUNTY Winnebago DRILLING METHOD Hollow Stem Auger HAMMER TYPE CME-45 Automatic

STRUCT. NO.
Station
BORING NO. B-3h
Station [redacted]
Offset
Ground Surface Elev. 769.80 ft

Surface Water Elev. ft
Stream Bed Elev. 72.50 ft

Groundwater Elev.:
First Encounter ft
Upon Completion ft
After Hrs. ft

Description	Elev.	DEPTH (ft)	BLOWS (/6")	UCS Qu (tsf)	MOIST (%)
MEDIUM dark brown SILTY CLAY LOAM				0.5 P	24.0
	767.30				
STIFF brown CLAY LOAM			2 3 4	1.5 P	18.0
	765.80				
STIFF tan SANDY LOAM		-5	8 9 10	1.1 P	12.0
	763.30				
STIFF tan SANDY LOAM TILL			7 9 11	1.8 P	11.0
	760.30				
VERY DENSE tan weathered LIMESTONE		-10	37 100/5"		
	758.30				
VERY DENSE tan weathered LIMESTONE			100/2"		
Auger Refusal at 14'	755.80				
Borehole continued with rock coring.		-15			
		-20			

The Unconfined Compressive Strength (UCS) Failure Mode is indicated by (B-Bulge, S-Shear, P-Penetration)
The SPT (N value) is the sum of the last two blow values in each sampling zone (AASHTO T206)

BBS, form 138 (Rev. 8-99)

BORING B-3h

Station: 2647+72.12
Offset from ℄ I-39: 61.58' Lt.

Illinois Department of Transportation
Division of Highways
Illinois Department of Transportation/D-2

ROCK CORE LOG

Page 1 of 1

Date 6/20/08

ROUTE FAP 301 DESCRIPTION P92-111-06 Bridge over the CC&P RR, .3 m. W. of Perryville Road LOGGED BY W. Garza

SECTION (201-3), K (4-1, 5) K LOCATION Cherry Valley Twp. - 10 NE, SEC., TWP. 43N, RNG. 2E

COUNTY Winnebago CORING METHOD

STRUCT. NO.
Station
CORING BARREL TYPE & SIZE
Core Diameter 2 in
Top of Rock Elev. 760.30 ft
Begin Core Elev. 755.80 ft
BORING NO. B-3h
Station [redacted]
Offset
Ground Surface Elev. 769.80 ft

Description	Elev.	DEPTH (ft)	CORE (#)	RECOVERY (%)	R.Q.D. (%)	CORE TIME (min/ft)	STRENGTH (tsf)
Dolomite: yellow tan-buff, vuggy and pitted, very finely crystalline, with chert inclusions, top foot contains one-inch segments. t.s.f.: 751.8 to 751.2	755.80	-15	1	100	32	1.8	97.0
Dolomite: as above, though medium to massively bedded, with sandy inclusions. t.s.f.: 747.1 to 746.5	750.80	-20	2	100	62	1.4	87.0
Dolomite: as above, less pitted t.s.f.: 744.2 to 743.5	745.80	-25	3	100	83	2	184.0
End of Boring	740.80	-30					

Color pictures of the cores
Cores will be stored for examination until
The "Strength" column represents the uniaxial compressive strength of the core sample (ASTM D-2938)

BBS, form 138 (Rev. 8-99)

MODEL: SHEET
FILE NAME: c:\pwworkdir\benesch projects\projects\d0173871\D264C24_SHT_0208-0209-CN_BORING-LOG-2.dgn

Bowman
10 S. LaSalle Street, Suite 2110
Chicago, Illinois 60603
312-554-0300
www.bowman.com

USER NAME = lfranceschina	DESIGNED - JW	REVISED -	
	DRAWN - DSO	REVISED -	
PLOT SCALE = $SCALE$	CHECKED - AJN	REVISED -	
PLOT DATE = 8/12/2024	DATE - 02/27/24	REVISED -	

STATE OF ILLINOIS
DEPARTMENT OF TRANSPORTATION

BORING LOGS 2
STRUCTURE NO. 101-0208/0209

SCALE: SHEET 59 OF 60 SHEETS STA. TO STA.

F.A.I RTE.	SECTION	COUNTY	TOTAL SHEETS	SHEET NO.
*	(201-3)R & (4-1,5)R	WINNEBAGO	1685	602
		CONTRACT NO. 64C24		
	ILLINOIS	FED. AID PROJECT		

* FAI ROUTE 39 (I-39) & FAP 301 (US 20)

Illinois Department of Transportation
Division of Highways
Illinois Department of Transportation/D-2

SOIL BORING LOG

Date 6/24/08

ROUTE FAP 301 DESCRIPTION P92-111-06 Bridge over the CC&P RR., .3 m. W. of Perryville Road LOGGED BY W. Garza

SECTION (201-3), K (4-1, 5) K LOCATION Cherry Valley Twp. - 10 NE, SEC., TWP. 43N, RNG. 2E

COUNTY Winnebago DRILLING METHOD Hollow Stem Auger HAMMER TYPE CME-45 Automatic

STRUCT. NO.
Station
BORING NO. B-4h
Station [redacted]
Offset
Ground Surface Elev. 797.00 ft

Surface Water Elev. ft
Stream Bed Elev. 72.50 ft

Groundwater Elev.:
First Encounter 757.0 ft ▼
Upon Completion ft
After Hrs. ft

Description	Elev.	DEPTH (ft)	BLOWS (/6")	UCS Qu (tsf)	MOIST (%)
MEDIUM brown LOAM	794.50		3		
			3	0.5	13.0
	793.00		4	P	
STIFF brown SILTY CLAY LOAM		-5	1		
			2	1.2	19.0
	790.50		5	B	
VERY LOOSE gray very moist dirty SAND			3		
			1		18.0
	788.00		1		
STIFF gray LOAM		-10	2		
			3	1.9	15.0
	785.50		6	S	
STIFF gray SILTY CLAY LOAM			3		
			4	1.8	20.0
	783.00		6	B	
VERY STIFF light brown CLAY LOAM		-15	2		
			5	2.5	21.0
	780.50		7	B	
VERY STIFF gray SILTY CLAY LOAM			2		
			5	2.3	20.0
	778.00		7	B	
		-20			
STIFF gray SILTY CLAY LOAM			4		
			4	1.4	14.0
	775.50		9	P	
MEDIUM tan SANDY LOAM			5		
			13		7.0
	773.00		11		
VERY STIFF gray/brown SILTY CLAY LOAM		-25	3		
			5	2.9	21.0
	770.50		8	B	
STIFF brown LOAM			2		
			6	1.8	16.0
	768.00		9	B	
VERY STIFF gray CLAY LOAM with SANDY LOAM lens		-30	8		
			11	3.7	17.0
	765.50		9	B	
VERY STIFF gray CLAY LOAM TILL			4		
			8	2.5	18.0
	763.00		9	P	
VERY STIFF brown LOAM TILL		-35	2		
			5	3.5	13.0
			7		
	760.00				
MEDIUM tan weathered LIMESTONE			9		
			10		
	758.00		17		
		▼-40			

The Unconfined Compressive Strength (UCS) Failure Mode is indicated by (B-Bulge, S-Shear, P-Penetrometer)
The SPT (N value) is the sum of the last two blow values in each sampling zone (AASHTO T206)

BBS, from 137 (Rev. 8-99)

Illinois Department of Transportation
Division of Highways
Illinois Department of Transportation/D-2

SOIL BORING LOG

Date 6/24/08

ROUTE FAP 301 DESCRIPTION P92-111-06 Bridge over the CC&P RR., .3 m. W. of Perryville Road LOGGED BY W. Garza

SECTION (201-3), K (4-1, 5) K LOCATION Cherry Valley Twp. - 10 NE, SEC., TWP. 43N, RNG. 2E

COUNTY Winnebago DRILLING METHOD Hollow Stem Auger HAMMER TYPE CME-45 Automatic

STRUCT. NO.
Station
BORING NO. B-4h
Station [redacted]
Offset
Ground Surface Elev. 797.00 ft

Surface Water Elev. ft
Stream Bed Elev. 72.50 ft

Groundwater Elev.:
First Encounter 757.0 ft ▼
Upon Completion ft
After Hrs. ft

Description	Elev.	DEPTH (ft)	BLOWS (/6")	UCS Qu (tsf)	MOIST (%)
MEDIUM tan weathered LIMESTONE			12		
			15		
	755.50		9		
VERY DENSE tan weathered LIMESTONE			100/4"		
	753.50				
Auger Refusal at 43.5'					
Borehole continued with rock coring.		-45			
		-50			
		-55			
		-60			

The Unconfined Compressive Strength (UCS) Failure Mode is indicated by (B-Bulge, S-Shear, P-Pen...
The SPT (N value) is the sum of the last two blow values in each sampling zone (AASHTO T206)

BBS ... 8-99)

Illinois Department of Transportation
Division of Highways
Illinois Department of Transportation/D-2

ROCK CORE LOG

Date 6/24/08

ROUTE FAP 301 DESCRIPTION P92-111-06 Bridge over the CC&P RR., .3 m. W. of Perryville Road LOGGED BY W. Garza

SECTION (201-3), K (4-1, 5) K LOCATION Cherry Valley Twp. - 10 NE, SEC., TWP. 43N, RNG. 2E

COUNTY Winnebago CORING METHOD

STRUCT. NO.
Station
CORING BARREL TYPE & SIZE
Core Diameter 2 in
Top of Rock Elev. 760.00 ft
Begin Core Elev. 753.50 ft
BORING NO. B-4h
Station [redacted]
Offset
Ground Surface Elev. 797.00 ft

Description	Elev.	DEPTH (ft)	CORE (#)	RECOVERY (%)	R.Q.D. (%)	CORE TIME (min/ft)	STRENGTH (tsf)
Dolomite: yellow tan-buff, vuggy and pitted, very finely crystalline, chalky with washed out sand size particles and fractured throughout.	753.50		1	90	0	1	
		-45					
	748.50						
Dolomite: as above t.s.f.: 745.1 to 744.6			2	100	42	1.4	193.0
		-50					
	743.50						
Abandoned run - problems with water			3				
		-55					
	738.50						
End of Boring							
		-60					

Color pictures of the cores _____
Cores will be stored for examination until_____
The "Strength" column represents the uniaxial compressive strength of the core sample (ASTM D-2938)

BBS, form 138 (Rev. 8-99)

BORING B-4h

Station: 2647+36.30
Offset from ℄ I-39: 11.8' Rt.

MODEL: SHEET
FILE NAME: c:\pwworkdir\benesch projects\projects\d0173871\D284C24_SHT_0208-0209-CN_BORING-LOG-3.dgn

Bowman
10 S. LaSalle Street, Suite 2710
Chicago, Illinois 60603
312-454-0350
www.bowmanz.com

USER NAME = lfranceschina	DESIGNED - JW	REVISED -	
	DRAWN - DSO	REVISED -	
PLOT SCALE = $SCALE$	CHECKED - AJN	REVISED -	
PLOT DATE = 8/12/2024	DATE -	REVISED -	

STATE OF ILLINOIS
DEPARTMENT OF TRANSPORTATION

BORING LOGS 3
STRUCTURE NO. 101-0208/0209

SCALE: SHEET 60 OF 60 SHEETS STA. TO STA.

F.A.I RTE.	SECTION	COUNTY	TOTAL SHEETS	SHEET NO.
*	(201-3)R & (4-1,5)R	WINNEBAGO	1685	603
		CONTRACT NO. 64C24		
		ILLINOIS	FED. AID PROJECT	

* FAI ROUTE 39 (I-39) & FAP 301 (US 20)

Bench Mark: BM#402 - Cut square in southeast wingwall of S.N. 101-0070. Elevation 796.69

Exisiting Structure: S.N. 101-0069 (S.B.) and S.N. 101-0070 (N.B.) built as F.A. Route 194, Section 4 VB-1 at Station 832 +49.16 in 1963. Bridges widened and deck replaced in 1991 as F.A.I. Route 39, Section 4 VBY-1. Each superstructure consists of 3 spans of continous composite rolled steel beams with partial length flange cover plates. Each substructure consists of concrete stub abutments and concrete 5 column piers supported on piles. Length = 279'-8½" (back-to-back of abutments). Width = 42'-2" (out-to-out deck). Traffic is to be maintained utilizing stage construction.

No Salvage

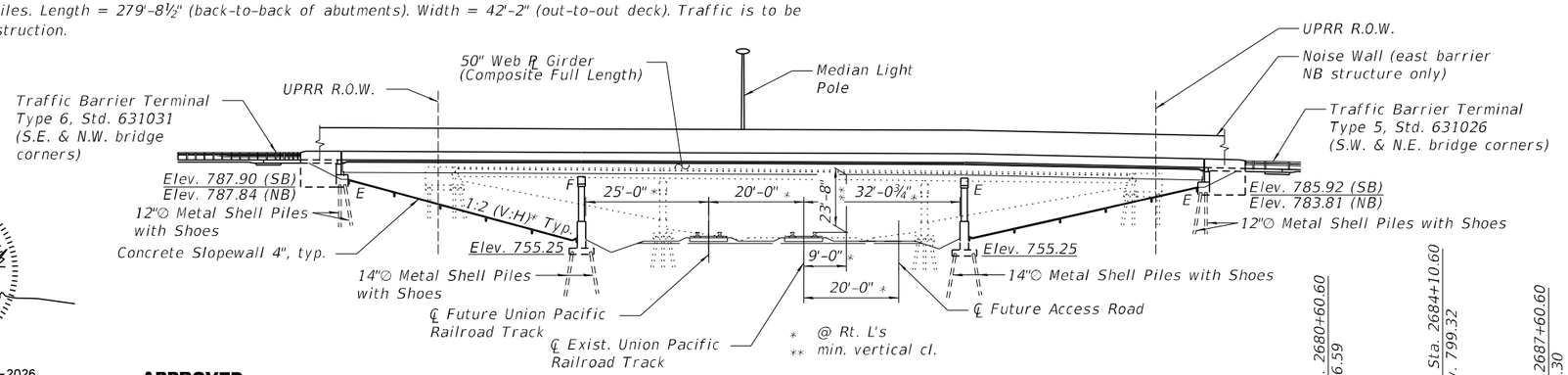

ELEVATION

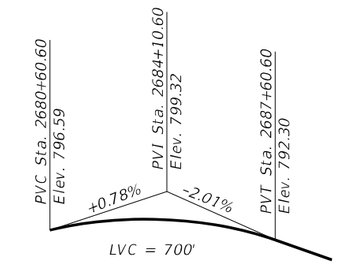

PROFILE GRADE F.A.I. RTE 39

Along Prop. PGL (NB) & Prop. PGL NB
Note: Up to ¼ inch may be ground off the bridge deck and the bridge approach slabs. The profile grade shows the final elevation after grinding.

DESIGN SPECIFICATIONS

2020 AASHTO LRFD Bridge Design Specifications, 9th Edition

LOADING HL-93

Allow 50#/sq. ft. for future wearing surface.
200 plf allowance for noise wall posts and paneling extending up to 8'-0" above top of barrier

SEISMIC DATA

Seismic Performance Zone (SPZ) = 1
Design Spectral Acceleration at 1.0 sec. (S_{D1}) = 0.079g
Design Spectral Acceleration at 0.2 sec. (S_{DS}) =0.135g
Soil Site Class = D

DESIGN STRESSES

FIELD UNITS

f'c = 3,500 psi (Substructure)
f'c = 4,000 psi (Superstructure Concrete)
fy = 60,000 psi (Reinforcement)
fy = 50,000 psi (M270 Grade 50)***

*** Structural steel to be metalized.

Sta. 7+00.00	Sta. 8+00.00	Sta. 9+00.00	Sta. 10+00.00	Sta. 11+00.00	Sta. 12+00.00	Sta. 13+00.00
Elev. 768.39	Elev. 767.81	Elev. 767.30	Elev. 766.74	Elev. 766.16	Elev. 765.71	Elev. 765.30

TOP OF RAIL ELEVATIONS

Along ℄ Exist. UPRR Track

Indicates Soil Boring Location

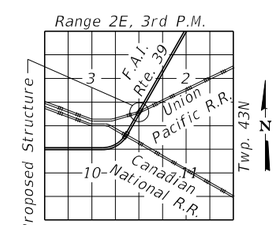

LOCATION SKETCH

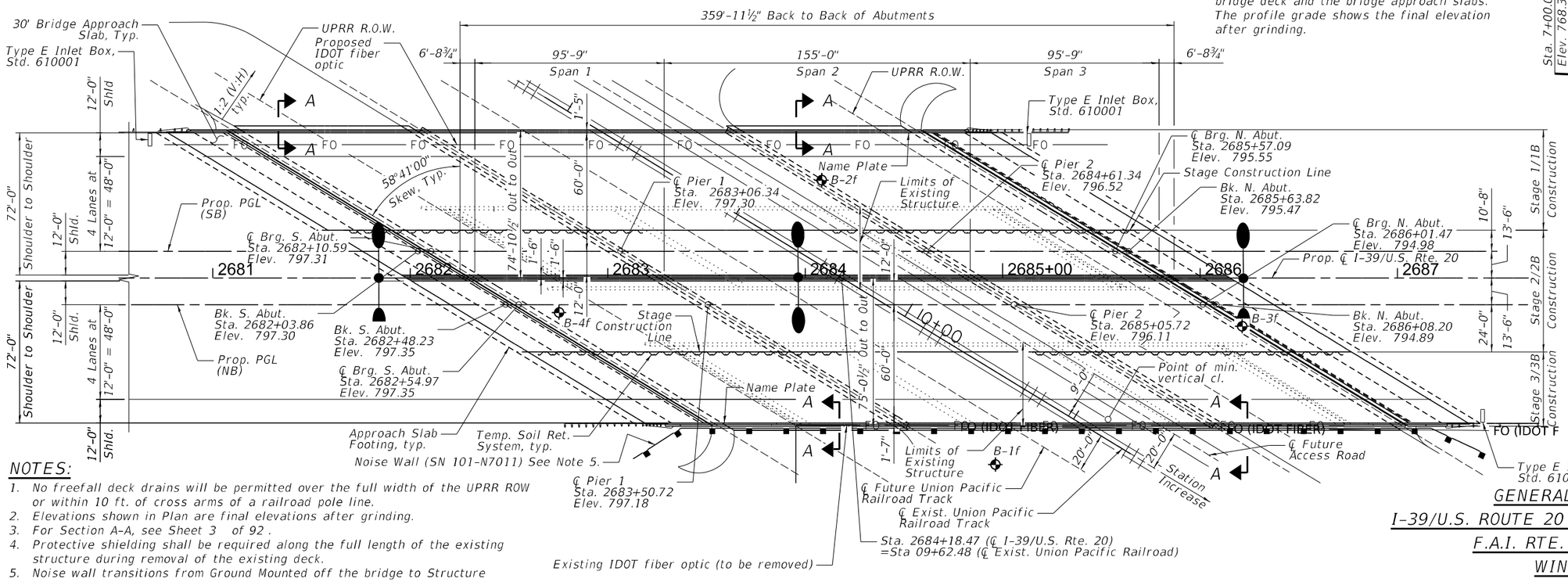

PLAN

NOTES:

1. No freefall deck drains will be permitted over the full width of the UPRR ROW or within 10 ft. of cross arms of a railroad pole line.
2. Elevations shown in Plan are final elevations after grinding.
3. For Section A-A, see Sheet 3 of 92 .
4. Protective shielding shall be required along the full length of the existing structure during removal of the existing deck.
5. Noise wall transitions from Ground Mounted off the bridge to Structure Mounted on the bridge. For further details on Ground/Structure Mounted Noise Wall, See Plans for SN 101-N7011 in Contract 64C24.

MATTHEW F. HELLENTHAL 081-007652 LICENSED STRUCTURAL ENGINEER STATE OF ILLINOIS

EXPIRATION DATE: 11-30-2026
DATE: 05-16-2025

APPROVED
For Structural Adequacy Only
Engineer of Bridges & Structures

GENERAL PLAN & ELEVATION
I-39/U.S. ROUTE 20 OVER UNION PACIFIC RAILROAD
F.A.I. RTE. 39 - SECTION (4-1,5)R
WINNEBAGO COUNTY
STA. 2684+18.47
STRUCTURE NUMBER 101-0210 (SB)
STRUCTURE NUMBER 101-0211 (NB)

benesch
Alfred Benesch & Company
35 W Wacker Drive, Suite 3300
Chicago, Illinois 60601
312-969-0450 Job No. 10800

USER NAME =	DESIGNED - AAB	REVISED -
	CHECKED - MFH	REVISED -
PLOT SCALE =	DRAWN - KMS	REVISED -
PLOT DATE =	CHECKED - MFH	REVISED -

STATE OF ILLINOIS
DEPARTMENT OF TRANSPORTATION

SHEET 1 OF 92 SHEETS

F.A.I. RTE.	SECTION	COUNTY	TOTAL SHEETS	SHEET NO.
39	(201-3)R & (4-1, 5)R	WINNEBAGO	1685	604

CONTRACT NO. 64C24
ILLINOIS FED. AID PROJECT

MODEL: $MODELNAME$
FILE NAME: c:\pwworkdir\benesch projects\projects\d0247003\D264C24-1010210_0211-sht-gpe_REV-NSP.dgn
5/16/2025 12:26:10 PM

INDEX OF SHEETS:

INDEX OF SHEETS (CONT.):

GENERAL NOTES:

1. These plans are for erection of the bridges. All work shown related to the Beam and Bearing Fabrication Contract (64U51) is for information only.
2. Fasteners shall be ASTM F 3125 Grade A325 Type 1, hot dip galvanized bolts in metallized areas. Bolts 7/8" diameter, holes 15/16" diameter, unless otherwise noted. See special provision for "Metallizing of Structural Steel".
3. Calculated weight of Structural Steel = 2,220,000 lbs
4. FOR INFORMATION ONLY - All structural steel shall be AASHTO M270 Grade 50 and shall be metallized. See Special Provision for "Metallizing of Structural Steel."
5. No field welding is permitted except as specified in the contract documents.
6. Reinforcement bars designated (E) shall be epoxy coated.
7. If the Contractor elects to use cantilever forming brackets on the exterior beams or girders, the brackets shall be placed at the same locations as required for the hardwood blocks in Article 503.06(b) of the Standard Specifications. If additional cantilever forming brackets are required, hardwood blocking shall be wedged between the exterior and first interior beam at each of the additional bracket locations.
8. The concrete for bridge decks finished according to Article 503.16(a) of the Standard Specifications shall be placed and compacted parallel to the skew in uniform increments along centerline of bridge. The machine used for finishing shall be set parallel to the skew for striking off and screeding the concrete.
9. A film forming Concrete Sealer shall be applied to the designated areas of the abutments.
10. Bearing seat surfaces shall be constructed or adjusted to the designated elevations within a tolerance of 1/8 in. (0.01 ft.). Adjustment shall be made either by grinding the surface or by shimming the bearings.
11. It shall be the Contractor's responsibility to verify the location of all utilities prior to starting construction.
12. The existing structural steel coating contains lead. The Contractor shall take appropriate precautions to address the presence of lead on this project.
13. Slipforming is only permitted for the west parapet of the southbound structure (SN 101-0210).
14. It is anticipated that the structural steel and bearings will be fabricated by June 1, 2026 for Stage 1, June 1, 2027 for Stage 2, and June 1, 2028 for Stage 3. The delivery dates shall be coordinated with IDOT and the Contractor responsible for Contract No. 64U51.

TOTAL BILL OF MATERIAL

ITEM	UNIT	SN 101-0210/0211		
		SUPER	SUB	TOTAL
Removal of Existing Structures No. 3	Each	0.5	0.5	1
Removal of Existing Structures No. 4	Each	0.5	0.5	1
Protective Shield	Sq Yd	2,580		2,580
Structure Excavation	Cu Yd		7,526	7,526
Concrete Structures	Cu Yd		3,178.6	3,178.6
Concrete Superstructure	Cu Yd	1,758.2		1,758.2
Protective Coat	Sq Yd	7,576		7,576
Concrete Superstructure (Approach Slab)	Cu Yd	416.6		416.6
Erecting Structural Steel	L Sum	0.58		0.58
Stud Shear Connectors	Each	31,620		31,620
Reinforcement Bars, Epoxy Coated	Pound	640,340	388,000	1,028,340
Bar Splicers	Each	2,644	648	3,292
Mechanical Splicers	Each	18	80	98
Slope Wall 4 Inch	Sq Yd		3,370	3,370
Furnishing Metal Shell Piles 12" x 0.250"	Foot		4,990	4,990
Furnishing Metal Shell Piles 14" x 0.312"	Foot		4,132	4,132
Driving Piles	Foot		9,122	9,122
Test Pile Metal Shells	Each		10	10
Pile Shoes	Each		320	320
Name Plates	Each	2		2
Preformed Joint Strip Seal	Foot	282		282
Erecting Elastomeric Bearing Assembly, Type I	Each	20		20
Erecting Elastomeric Bearing Assembly, Type II	Each	20		20
Anchor Bolts, 1"	Each		80	80
Anchor Bolts, 1 1/4"	Each		160	160
Temporary Soil Retention System	Sq Ft		8,597	8,597
Granular Backfill for Structures	Cu Yd		1,114	1,114
Concrete Sealer	Sq Ft		7,085	7,085
Geocomposite Wall Drain	Sq Yd		534	534
Pipe Underdrains for Structures 4"	Foot		649	649
Bridge Deck Grooving (Longitudinal)	Sq Yd	4,438		4,438
Bar Terminators	Each	152		152
Erecting High Load Multi-Rotational Bearings, Disc, Fixed-600K	Each	20		20
Erecting High Load Multi-Rotational Bearings, Disc, Guided Expansion-600K	Each	20		20
Diamond Grinding (Bridge Section)	Sq Yd	8,626		8,626
Modular Expansion Joint 6"	Foot	284		284
Temporary Shoring	Each		4	4
Noise Abatement Wall Anchor Rod Assembly	Each	40		40

RAILROAD NOTES:

1. Use the Union Pacific Railroad Public Projects Manual as a guide for assisting in administering, coordinating, planning, and implementing your project.
2. Prior to construction, obtain Railroad review and approval of all relevant construction items, including but not limited to, shoring, track & ground monitoring, erection, demolition, and falsework. All designs must adhere to the most restrictive provisions of the current UPRR and AREMA standards and guidelines in effect at the time the work is executed. Allow a minimum of 4 weeks for review and approval of each submittal. For submittals not in accordance with these notes, longer review times shall be expected.
3. Projects shall be designed such that all construction activities and phasing will not compromise safety nor impact Railroad operations.
4. Railroad requirements do not allow work within 50 feet of track centerline when a train passes the work site and all personnel must clear the area within 25 feet of the track centerline and secure all equipment.
5. Construction activities must be performed within naturally occurring track windows. Coordinate all requests for construction work windows with the Railroad's Designated Representative to ensure that the work is scheduled to eliminate any potential disruption to the Railroad's operations.
6. Verify the elevation of the existing top-of-rail profile before starting construction. Top-of-rail survey shall be performed for 1000 feet on either side of proposed overhead structure. Additional vertical clearance may be required for adjustment of sag in vertical curve, future track raise, flood considerations, construction and maintenance purposes. Bring all discrepancies to the attention of the Railroad prior to construction.

RAILROAD NOTES (CONT.):

7. Construction activities are not allowed within the temporary construction clearance envelope per the current UPRR Guidelines for Railroad Grade Separation Projects and Guidelines for Temporary Shoring.
8. The minimum permanent vertical clearance shall be 23'-4" measured from top of highest rail to the lowest obstruction under the structure. The extent of this vertical clearance shall be a minimum of 9 feet to the field side of the outermost existing or future tracks, measured perpendicular from the centerline of said tracks. In curved track, 9 feet shall be increased either 6 inches total or 1.5 inches for every degree of curve, whichever is greater. The permanent vertical clearance shall extend to cover all existing and future tracks, including the space in between.
9. All permanent clearances shall be verified throughout construction. A compliance report shall be submitted to the Railroad before project closing. All discrepancies shall be brought to the attention of the Railroad.
10. The permanent vertical and horizontal design clearances, which are specified in the bid documents approved by the Railroad, must be maintained in relation to the top-of-rail and centerline of existing and future tracks, respectively. Any reduction of these clearances is not permitted.
11. The proposed project shall not increase the quantity and/or characteristics of the flow in the Railroad's ditches and/or drainage structures.
12. Appropriate measures for the location and protection of UPRR facilities shall be addressed in all project submittals. For specific Railroad requirements and additional information refer to www.up.com/cbud. Abandonment of utilities must follow the UPRR Guidelines For Abandonment of Subsurface Utility Structures.

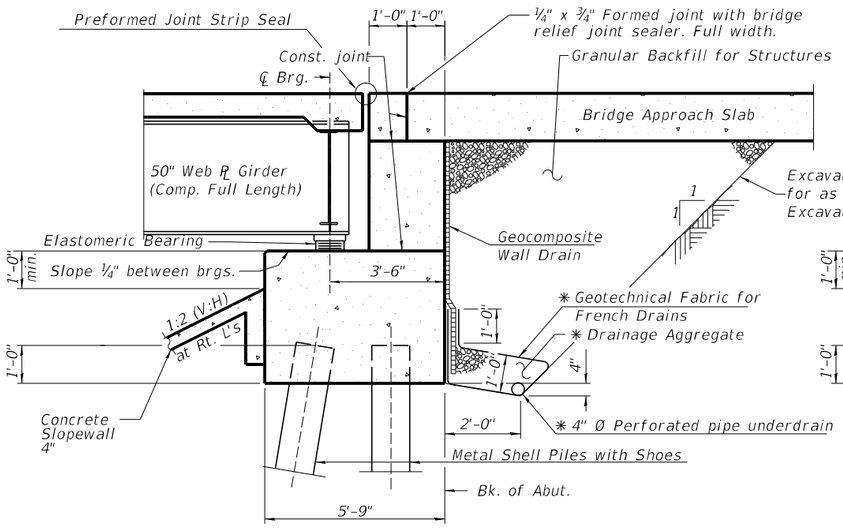

SECTION THRU SOUTH ABUTMENT

(Horiz. dim. @ Rt. angles)

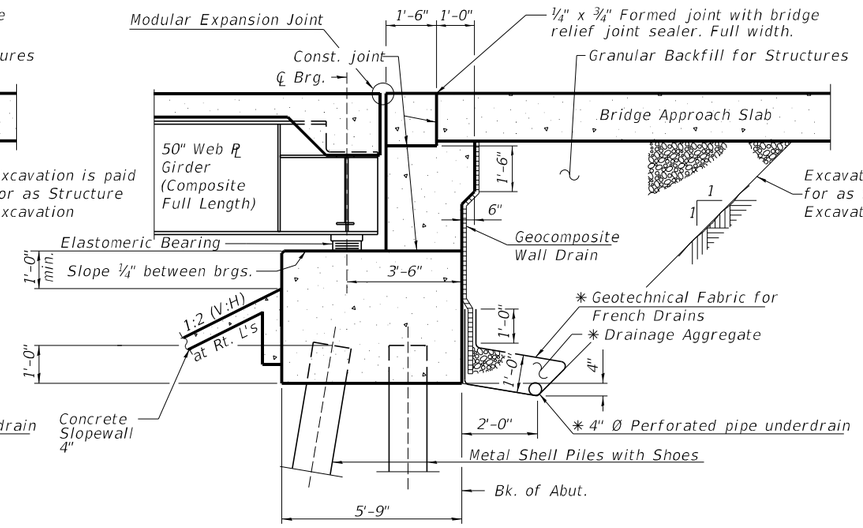

SECTION THRU NORTH ABUTMENT

(Horiz. dim. @ Rt. angles)

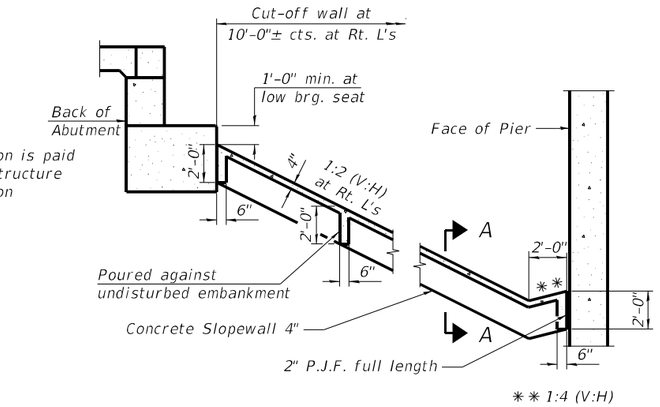

SECTION THRU CONCRETE SLOPEWALL

(Horiz. dim. @ Rt. L's)

✱ Included in the cost of Pipe Underdrains for Structures 4".

Note:
All drainage system components shall extend parallel to the abutment back wall until they intersect the wingwalls or 2'-0" from the end of the wingwalls when the wings are parallel to the abutment. The pipe shall extend under the wingwall, if necessary, until intersecting the side slopes. The pipes shall drain into concrete headwalls. (See Article 601.05 of the Standard Specifications and Highway Standard 601101).

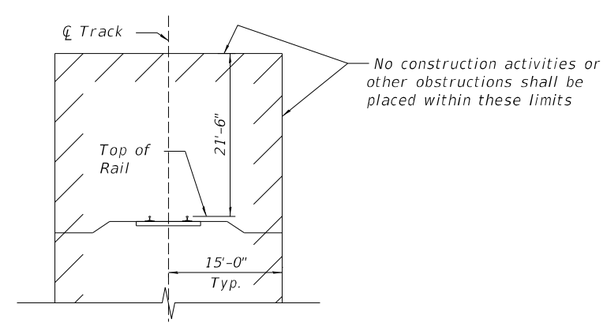

MIN. CONSTRUCTION CLEARANCE ENVELOPE

(Normal to Railroad)

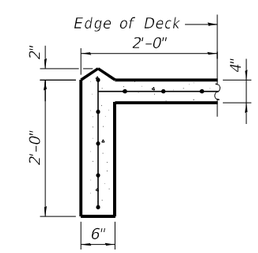

SECTION A-A

STATION 2684+18.47
BUILT 202_ BY
STATE OF ILLINOIS
F.A.I. RT. 39
SEC. (4-1, 5)R
LOADING HL-93
STRUCTURE NO. 101-0210

NAME PLATE

See Std. 515001

STATION 2684+18.47
BUILT 202_ BY
STATE OF ILLINOIS
F.A.I. RT. 39
SEC. (4-1, 5)R
LOADING HL-93
STRUCTURE NO. 101-0211

NAME PLATE

See Std. 515001

NOTES:

1. Slope wall shall be reinforced with welded wire fabric, 6in x 6in - W4.0 x W4.0, weighing 58 lbs. per 100 sq. ft.

MODEL: SMODELNAMES
FILE NAME: c:\pwworkdir\benesch projects\projects\dms65238\D264C24-1010210_0211-sht-gendtls.dgn

benesch
Alfred Benesch & Company
35 W Wacker Drive, Suite 3300
Chicago, Illinois 60601
312-565-0450 Job No. 10800

USER NAME =	DESIGNED - AAB	REVISED -	
	CHECKED - MFH	REVISED -	
PLOT SCALE =	DRAWN - KMS	REVISED -	
PLOT DATE =	CHECKED - MFH	REVISED -	

STATE OF ILLINOIS
DEPARTMENT OF TRANSPORTATION

GENERAL DATA
STRUCTURE NO. 101-0210 & 101-0211

SHEET 3 OF 92 SHEETS

F.A.I. RTE.	SECTION	COUNTY	TOTAL SHEETS	SHEET NO.
39	(201-3)R & (4-1, 5)R	WINNEBAGO	1685	606
		CONTRACT NO. 64C24		
		ILLINOIS	FED. AID PROJECT	

2/11/2025 9:32:31 AM

S. ABUT. WORK POINTS

W.P.	*Station	*Offset
1	2680+86.76	74.92 Lt.
2	2680+86.76	72.42 Lt.
3	2681+07.02	72.42 Lt.
4	2682+26.51	00.28 Rt.
5	2682+30.01	00.04 Lt.
6	2682+31.91	03.16 Lt.
7	2681+08.71	78.12 Lt.
8	2681+06.76	74.92 Lt.

PIER 1 WORK POINTS

W.P.	*Station	*Offset
9	2682+04.71	70.06 Lt.
10	2683+26.10	3.79 Rt.
11	2683+30.77	3.90 Lt.
12	2682+09.39	77.75 Lt.

PIER 2 WORK POINTS

W.P.	*Station	*Offset
13	2683+59.71	70.06 Lt.
14	2684+81.10	3.79 Rt.
15	2684+85.77	3.90 Lt.
16	2683+64.39	77.75 Lt.

N. ABUT. WORK POINTS

W.P.	*Station	*Offset
17	2684+57.08	71.71 Lt.
18	2685+80.08	03.12 Rt.
19	2685+82.00	00.04 Lt.
20	2685+85.48	00.33 Lt.
21	2684+66.99	72.42 Lt.
22	2684+82.88	72.42 Lt.
23	2684+82.88	74.92 Lt.
24	2684+59.03	74.92 Lt.

*All Stations and Offsets Are Measured from ℄ I-39

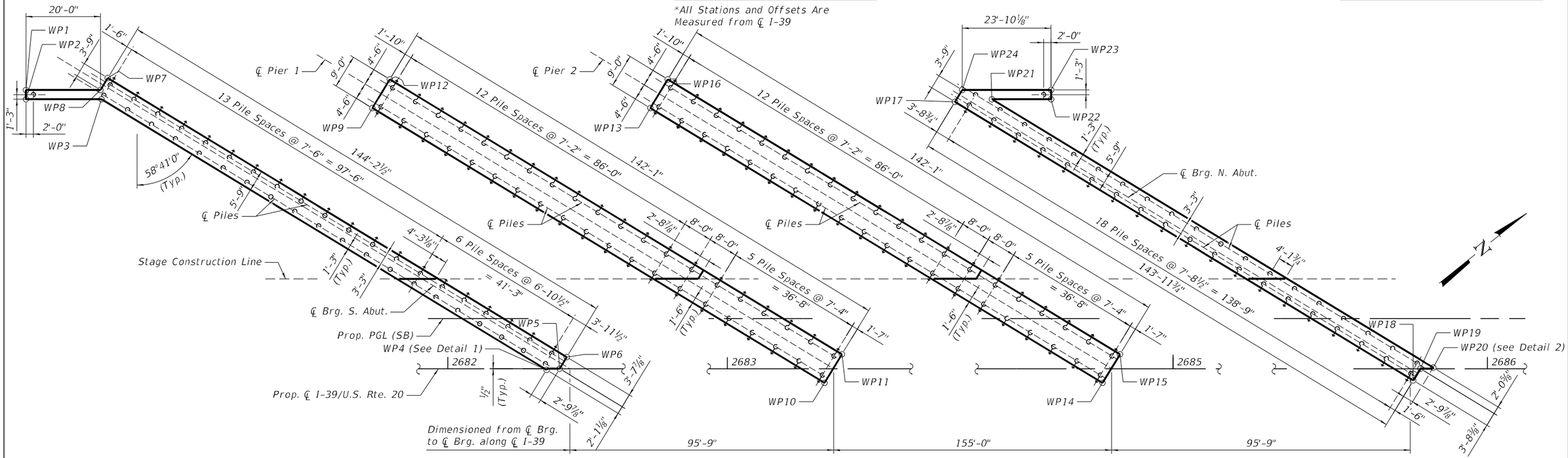

FOUNDATION LAYOUT

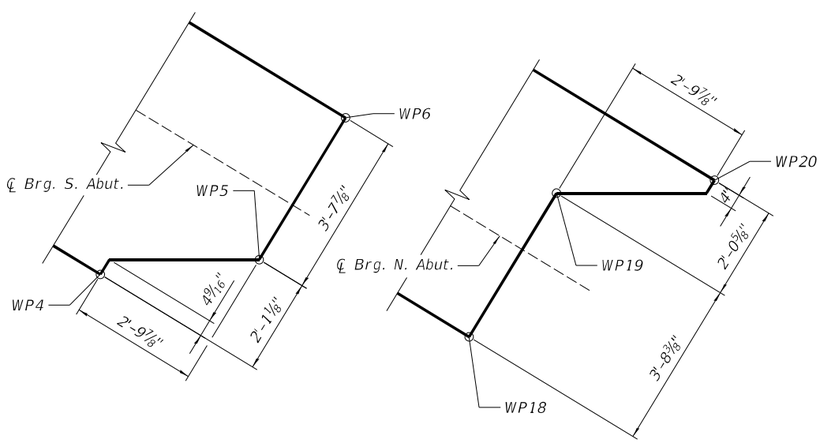

DETAIL 1

DETAIL 2

LEGEND

= Pile Battered 1H:4V

= Vertical Pile

NOTES:

1. See Sheets 81 to 85 of 92 for pier details.
2. See Sheets 70 to 79 of 92 for abutment details.
3. After demolition of the existing abutments, the Contractor shall verify that the existing back row vertical piles will not conflict with driving the proposed abutment batter piles. The Contractor shall inform he Engineer of any potential conflicts before driving piles.
4. Pile batter may be reduced to a minimum of 1H:12V for piles located directly adjacent to the stage lines where the pile leads conflict with the existing or proposed structure.

MODEL: SMODELNAMES
FILE NAME: c:\pwworkdir\benesch projects\dms65238\D264C24-1010210_0211-sht-find1.dgn

benesch
Alfred Benesch & Company
35 W Wacker Drive, Suite 3300
Chicago, Illinois 60601
312-565-0450 Job No. 10800

USER NAME =	DESIGNED - AAB	REVISED -	
	CHECKED - JHG	REVISED -	
PLOT SCALE =	DRAWN - KMS	REVISED -	
PLOT DATE =	CHECKED - JHG	REVISED -	

STATE OF ILLINOIS
DEPARTMENT OF TRANSPORTATION

FOUNDATION LAYOUT (SOUTHBOUND)
STRUCTURE NO. 101-0210 & 101-0211

SHEET 4 OF 92 SHEETS

F.A.I. RTE.	SECTION	COUNTY	TOTAL SHEETS	SHEET NO.
39	(201-3)R & (4-1, 5)R	WINNEBAGO	1685	607
		CONTRACT NO. 64C24		
		ILLINOIS	FED. AID PROJECT	

2/11/2025 9:32:35 AM

S. ABUT. WORK POINTS

W.P.	* Station	*Offset
1	2682+26.58	00.33 Rt.
2	2683+45.35	72.58 Rt.
3	2683+29.18	72.58 Rt.
4	2683+29.18	75.08 Rt.
5	2683+52.93	75.08 Rt.
6	2683+54.98	71.71 Rt.
7	2682+31.98	03.12 Lt.
8	2682+30.06	00.04 Rt.

PIER 1 WORK POINTS

W.P.	* Station	*Offset
9	2683+26.28	03.90 Rt.
10	2684+46.81	77.23 Rt.
11	2684+51.49	69.54 Rt.
12	2683+30.96	03.79 Lt.

PIER 2 WORK POINTS

W.P.	* Station	* Offset
13	2684+81.28	03.90 Rt.
14	2686+01.81	77.23 Rt.
15	2686+06.49	69.54 Rt.
16	2684+85.96	03.79 Lt.

N. ABUT. WORK POINTS

W.P.	* Station	* Offset
17	2685+80.15	03.16 Rt.
18	2687+03.35	78.12 Rt.
19	2687+05.20	75.08 Rt.
20	2687+25.20	75.08 Rt.
21	2687+25.20	72.58 Rt.
22	2687+05.31	72.58 Rt.
23	2685+85.55	00.28 Lt.
24	2685+82.05	00.04 Rt.

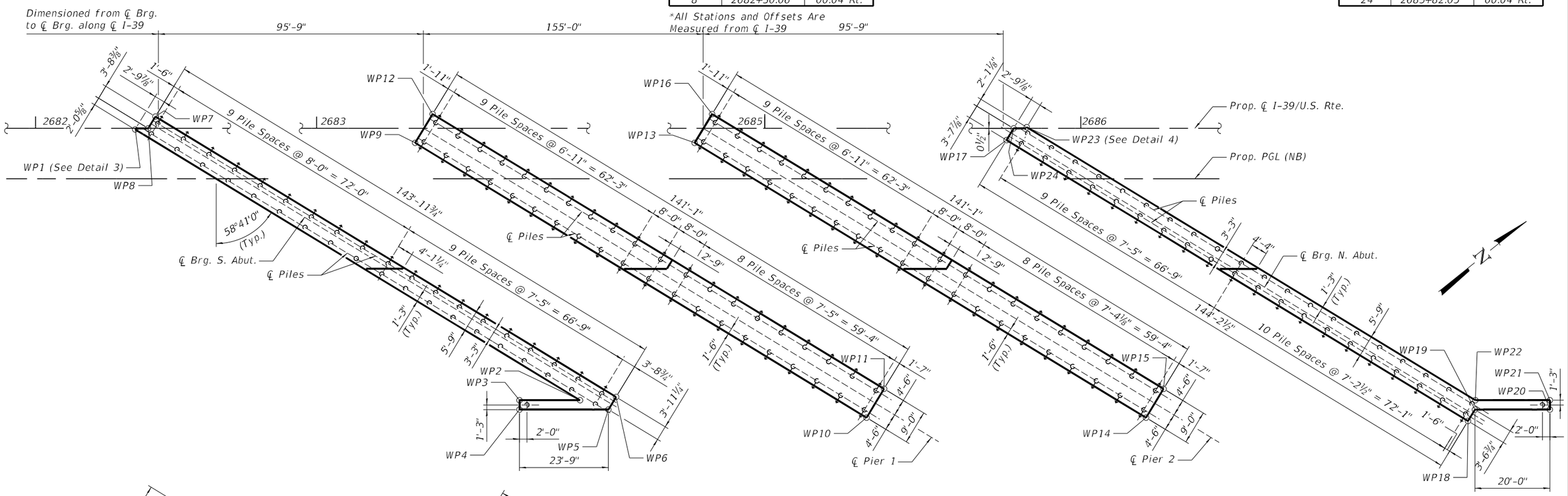

FOUNDATION LAYOUT

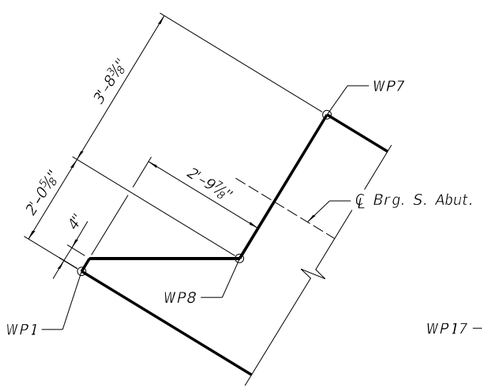

DETAIL 3

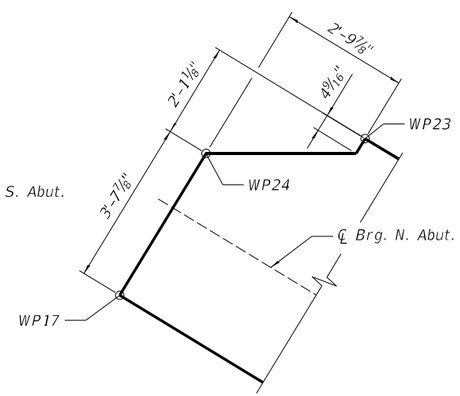

DETAIL 4

LEGEND

= Pile Battered 1H:4V

= Vertical Pile

NOTES:

1. See Sheets 81 to 85 of 92 for pier details.
2. See Sheets 70 to 79 of 92 for abutment details.
3. After demolition of the existing abutments, the Contractor shall verify that the existing back row vertical piles will not conflict with driving the proposed abutment batter piles. The Contractor shall inform he Engineer of any potential conflicts before driving piles.
4. Pile batter may be reduced to a minimum of 1H:12V for piles located directly adjacent to the stage lines where the pile leads conflict with the existing or proposed structure.

MODEL: $MODELNAME$
FILE NAME: c:\pwworkdir\benesch projects\projects\dms65238\D264C24-1010210_0211-sht-fnd2.dgn

benesch
Alfred Benesch & Company
35 W Wacker Drive, Suite 3300
Chicago, Illinois 60601
312-565-0450 Job No. 10800

USER NAME =	DESIGNED - AAB	REVISED -	
	CHECKED - JHG	REVISED -	
PLOT SCALE =	DRAWN - KMS	REVISED -	
PLOT DATE =	CHECKED - JHG	REVISED -	

STATE OF ILLINOIS
DEPARTMENT OF TRANSPORTATION

FOUNDATION LAYOUT (NORTHBOUND)
STRUCTURE NO. 101-0210 & 101-0211

SHEET 5 OF 92 SHEETS

F.A.I. RTE.	SECTION	COUNTY	TOTAL SHEETS	SHEET NO.
39	(201-3)R & (4-1, 5)R	WINNEBAGO	1685	608

CONTRACT NO. 64C24

ILLINOIS | FED. AID PROJECT

2/11/2025 9:32:40 AM

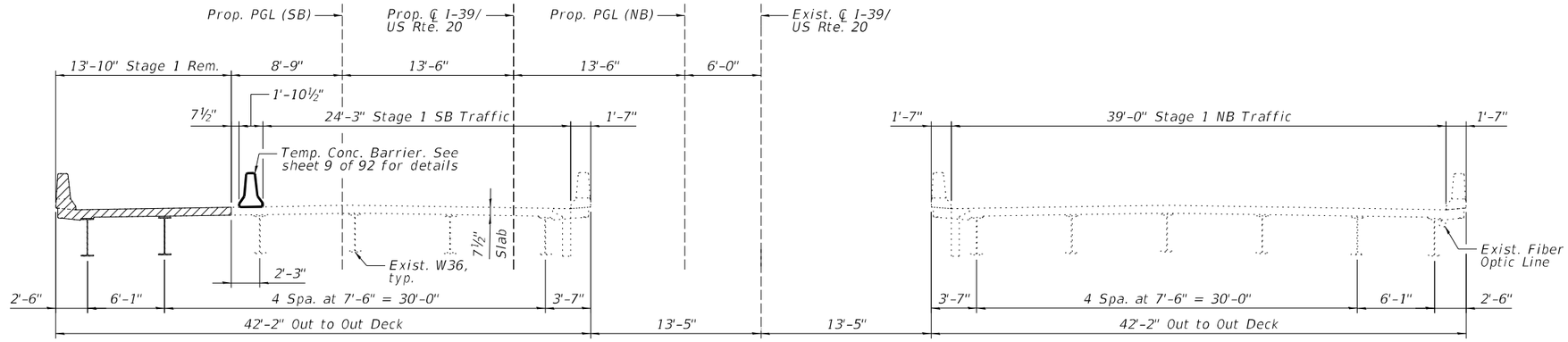

STAGE 1 REMOVAL

(Looking North)

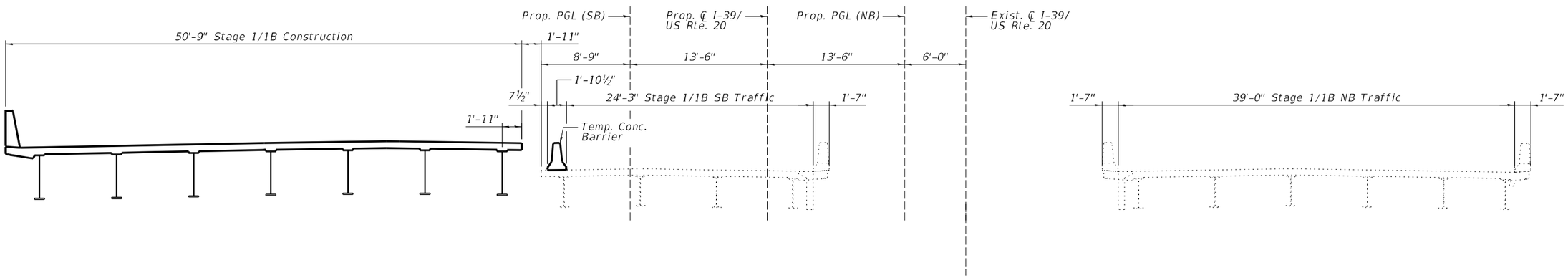

STAGE 1/1B CONSTRUCTION

(Looking North)

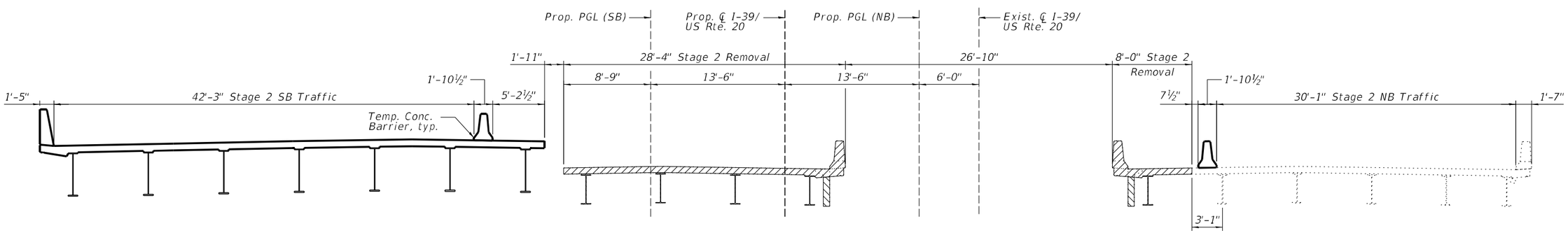

STAGE 2 REMOVAL

(Looking North)

NOTES:

1. All removal dimensions and details are approximate based on the existing plans and shall be confirmed by the Contractor prior to beginning removal.
2. Payment for superstructure removal, as shown herein, shall be included in the cost for Removal of Existing Structures No. 3 for SB (SN 101-0210) and Removal of Existing Structures No. 4 for NB (SN 101-0211).
3. Work this sheet with substructure removal limits and staging shown on sheets 10 thru 12 of 92 .
4. For quantity of Temporary Concrete Barrier, see Roadway Plans.
5. Hatched area indicates Removal of Existing Structures.

MODEL: sMODELNAMES
FILE NAME: c:\pwworkdir\benesch projects\projects\dms65238\D264C24-1010210_0211-sht-stg1.dgn

benesch
Alfred Benesch & Company
35 W Wacker Drive, Suite 3300
Chicago, Illinois 60601
312-565-0150 Job No. 10800

USER NAME =	DESIGNED - AAB	REVISED -	
	CHECKED - MFH	REVISED -	
PLOT SCALE =	DRAWN - KMS	REVISED -	
PLOT DATE =	CHECKED - MFH	REVISED -	

STATE OF ILLINOIS
DEPARTMENT OF TRANSPORTATION

STAGE CONSTRUCTION DETAILS (1 OF 3)
STRUCTURE NO. 101-0210 & 101-0211

SHEET 6 OF 92 SHEETS

F.A.I. RTE.	SECTION	COUNTY	TOTAL SHEETS	SHEET NO.
39	(201-3)R & (4-1, 5)R	WINNEBAGO	1685	609

CONTRACT NO. 64C24

ILLINOIS | FED. AID PROJECT

2/11/2025 9:32:44 AM

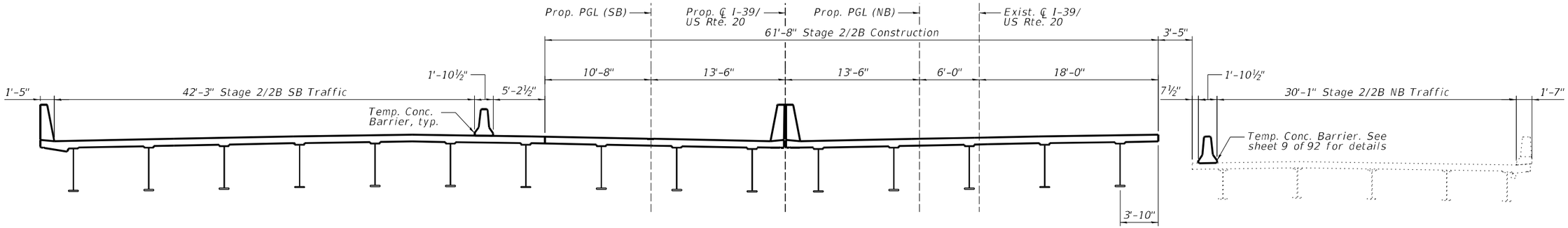

STAGE 2/2B CONSTRUCTION

(Looking North)

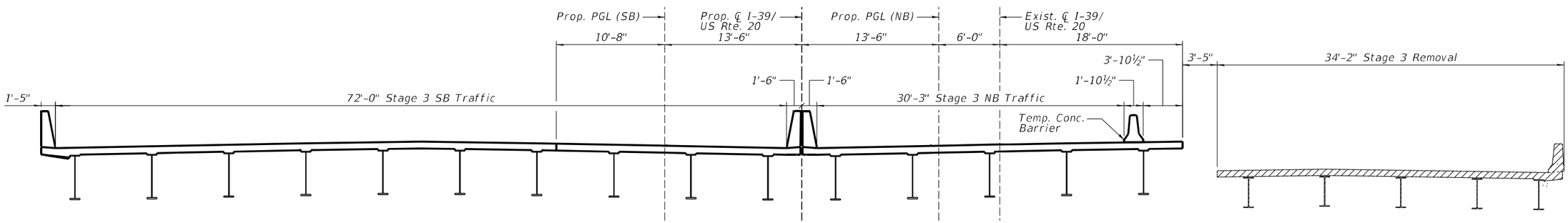

STAGE 3 REMOVAL

(Looking North)

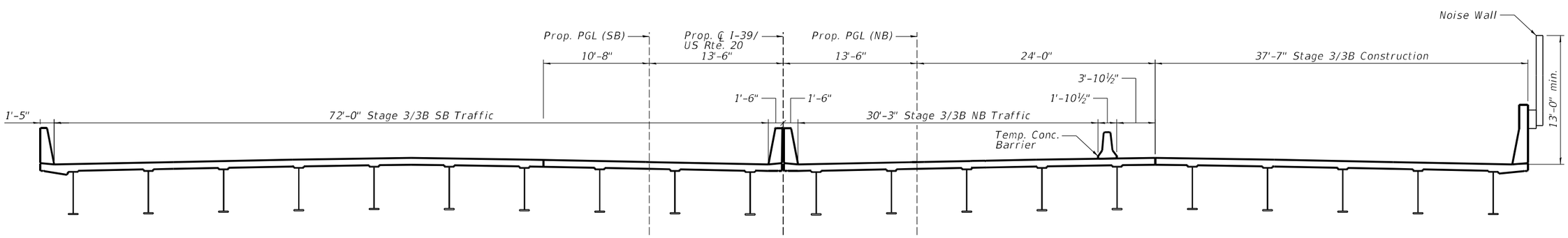

STAGE 3/3B CONSTRUCTION

(Looking North)

NOTES:

1. All removal dimensions and details are approximate based on the existing plans and shall be confirmed by the Contractor prior to beginning removal.
2. Payment for superstructure removal, as shown herein, shall be included in the cost for Removal of Existing Structures No. 3 for SB (SN 101-0210) and Removal of Existing Structures No. 4 for NB (SN 101-0211).
3. Work this sheet with substructure removal limits and staging shown on sheets 10 thru 12 of 92 .
4. For quantity of Temporary Concrete Barrier, see Roadway Plans.
5. Hatched area indicates Removal of Existing Structures.

MODEL: SMODELNAMES
FILE NAME: c:\pwworkn\benesch projects\projects\dms65238\D264C24-1010210_0211-sht-stg2.dgn

benesch
Alfred Benesch & Company
35 W Wacker Drive, Suite 3300
Chicago, Illinois 60601
312-565-0450 Job No. 10800

USER NAME =	DESIGNED - AAB	REVISED -	
	CHECKED - MFH	REVISED -	
PLOT SCALE =	DRAWN - KMS	REVISED -	
PLOT DATE =	CHECKED - MFH	REVISED -	

STATE OF ILLINOIS
DEPARTMENT OF TRANSPORTATION

STAGE CONSTRUCTION DETAILS (2 OF 3)
STRUCTURE NO. 101-0210 & 101-0211

SHEET 7 OF 92 SHEETS

F.A.I. RTE.	SECTION	COUNTY	TOTAL SHEETS	SHEET NO.
39	(201-3)R & (4-1, 5)R	WINNEBAGO	1685	610
		CONTRACT NO. 64C24		
	ILLINOIS	FED. AID PROJECT		

2/11/2025 9:32:48 AM

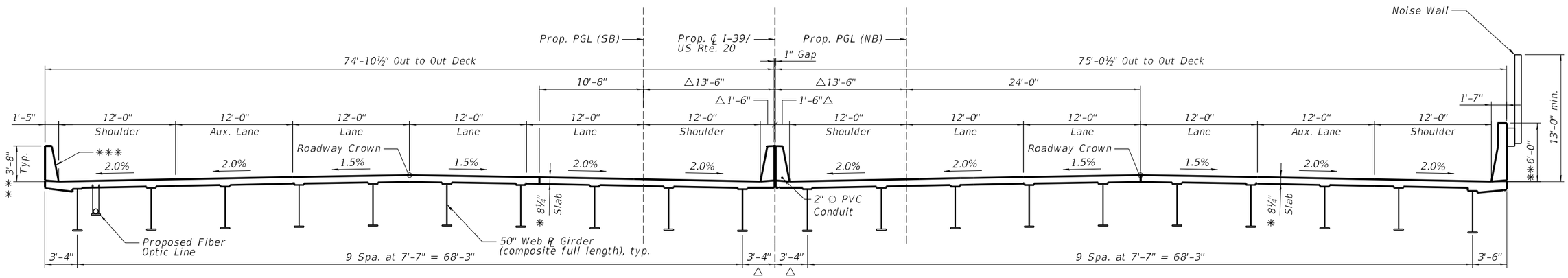

✱ Prior to grinding.
✱✱ After grinding.
✱✱✱ Constant-slope concrete parapet, typ.
△ Measured to Prop. ℄ I-39/US Rte. 20.

CROSS SECTION (FINAL CONDITION)

(Looking North)

MODEL: $MODELNAMES
FILE NAME: c:\pwworkdir\benesch projects\projects\dms65238\D264C24-1010210_0211-sht-stg3.dgn

2/11/2025 9:32:51 AM

benesch
Alfred Benesch & Company
35 W Wacker Drive, Suite 3300
Chicago, Illinois 60601
312-565-0150 Job No. 10800

USER NAME =	DESIGNED - AAB	REVISED -	
	CHECKED - MFH	REVISED -	
PLOT SCALE =	DRAWN - KMS	REVISED -	
PLOT DATE =	CHECKED - MFH	REVISED -	

STATE OF ILLINOIS
DEPARTMENT OF TRANSPORTATION

STAGE CONSTRUCTION DETAILS (3 OF 3)
STRUCTURE NO. 101-0210 & 101-0211

SHEET 8 OF 92 SHEETS

F.A.I. RTE.	SECTION	COUNTY	TOTAL SHEETS	SHEET NO.
39	(201-3)R & (4-1, 5)R	WINNEBAGO	1685	611
		CONTRACT NO. 64C24		
		ILLINOIS	FED. AID PROJECT	

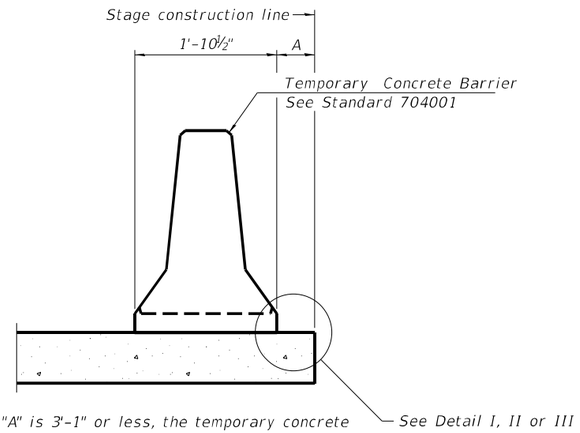

When "A" is 3'-1" or less, the temporary concrete barrier shall be restrained to the new slab according to Detail I, II or III. No restraint is required when "A" is greater than 3'-1".

NEW SLAB OR NEW DECK BEAM

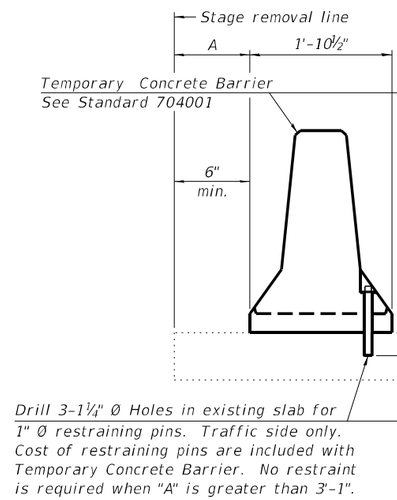

EXISTING SLAB

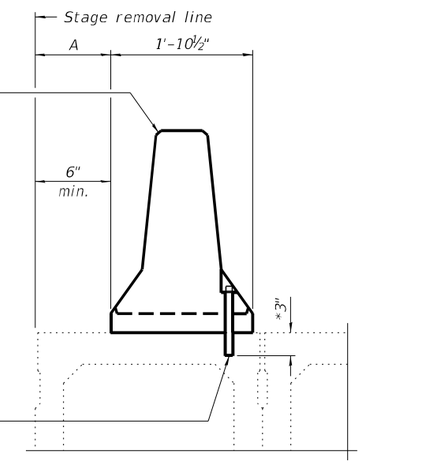

* When hot-mix asphalt wearing surface is present, embedment shall be 3" plus the wearing surface depth.

EXISTING DECK BEAM

SECTIONS THRU SLAB OR DECK BEAM

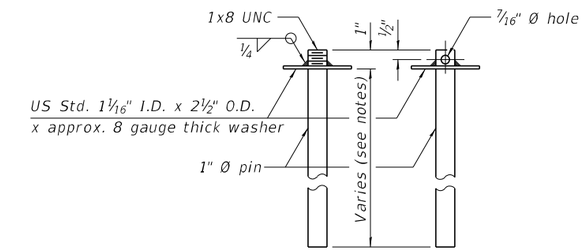

RESTRAINING PIN

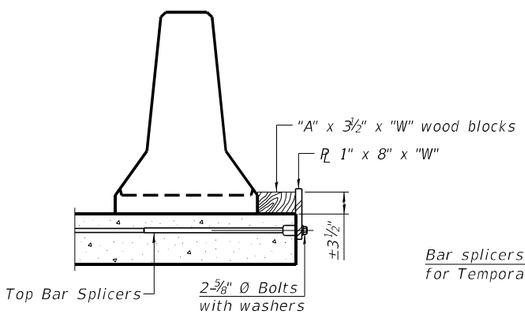

DETAIL I

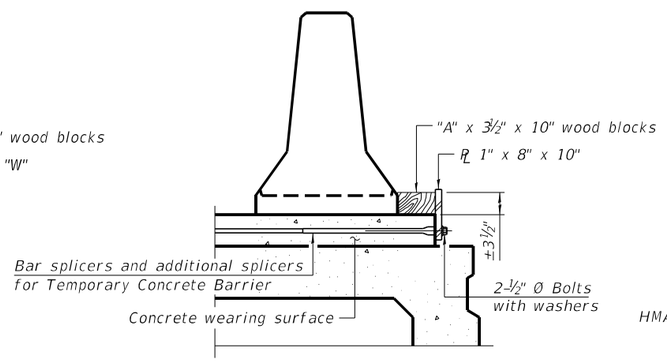

DETAIL II

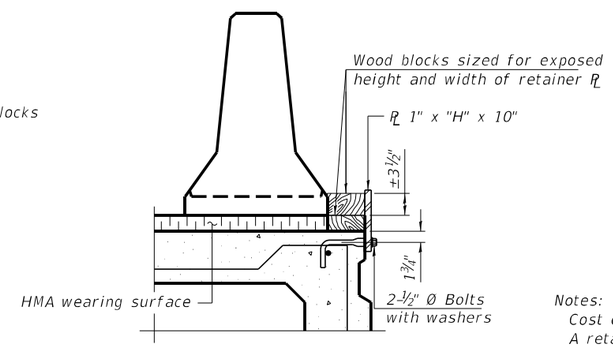

DETAIL III

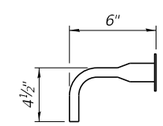

BAR SPLICER FOR #4 BAR - DETAIL III

Notes:

Cost of retainer assembly is included with Temporary Concrete Barrier.

A retainer assembly shall be located at the approximate ℄ of each temporary concrete barrier.

The retainer plate shall not be removed until the concrete on the adjacent stage is ready to be poured. For Detail III applications the retainer plate shall not be removed until just prior to placing the adjacent beam.

When the 'A' dimension is less than 1½", the wood block shall be omitted and the barrier shall be placed in direct contact with the steel retainer plate. For deck beam applications the minimum required 'A' distance is 6" to accommodate the shear key clamping device.

Detail I - Installation for a new bridge deck or bridge slab.

Detail II - Installation for a new deck beam with an initial concrete wearing surface. Additional bar splicers shall be provided at 6'-0" centers and paired with the bar splicers of the concrete wearing surface reinforcement to accommodate the installation of the retainer assemblies. The cost of the additional bar splicers is included with the concrete wearing surface.

Detail III - Installation for a new deck beam with no initial wearing surface or with an initial hot-mix asphalt (HMA) wearing surface present. The deck beam directly beneath the temporary concrete barrier shall be fabricated with bar splicer inserts in the side of the beam, as detailed, to accommodate the installation of the retainer assemblies. A pair of bar splicers, 6" apart, shall be placed at 6'-0" centers along the length of the beam. The cost of the bar splicers is included with the deck beam.

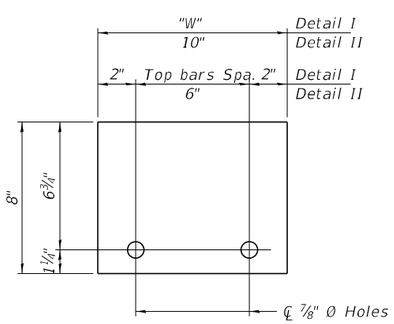

STEEL RETAINER PL 1" x 8" x "W"

(Detail I and II)

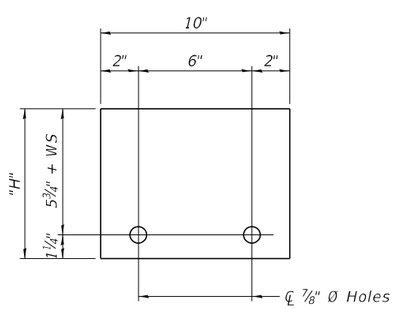

STEEL RETAINER PL 1" x "H" x 10"

(Detail III)

RAILING CRITERIA

NCHRP 350 Test Level	3
Railing Weight (plf)	440

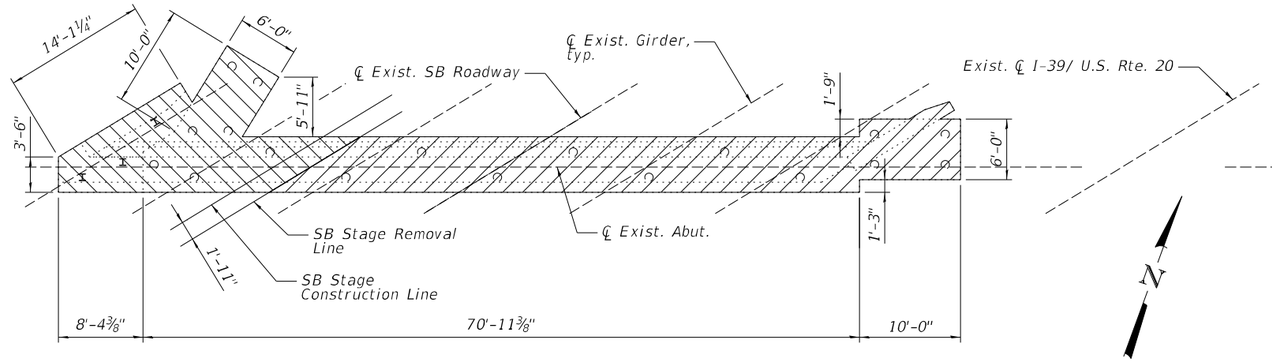

SOUTHBOUND

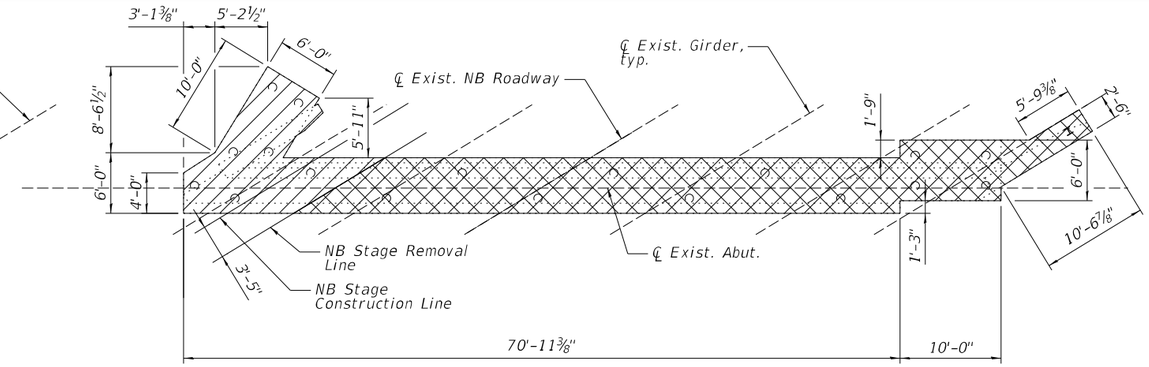

NORTHBOUND

PLAN - NORTH ABUTMENT REMOVAL

(North abutment shown, south abutment similar)

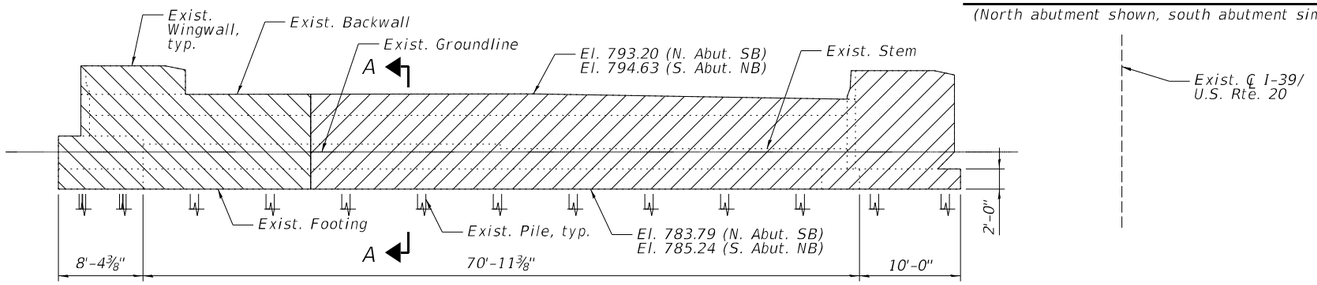

SOUTHBOUND

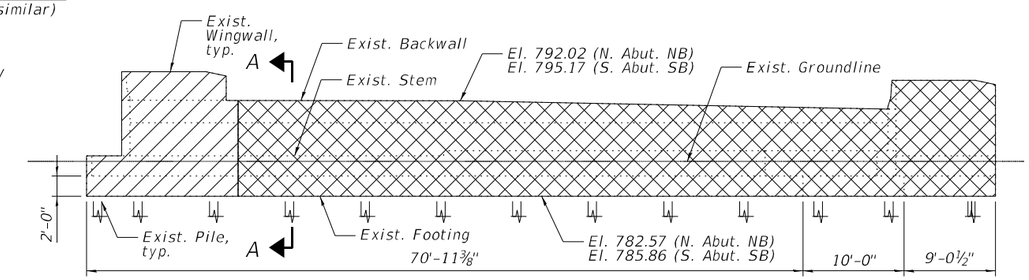

NORTHBOUND

ELEVATION - NORTH ABUTMENT REMOVAL

(North abutment shown, south abutment similar)

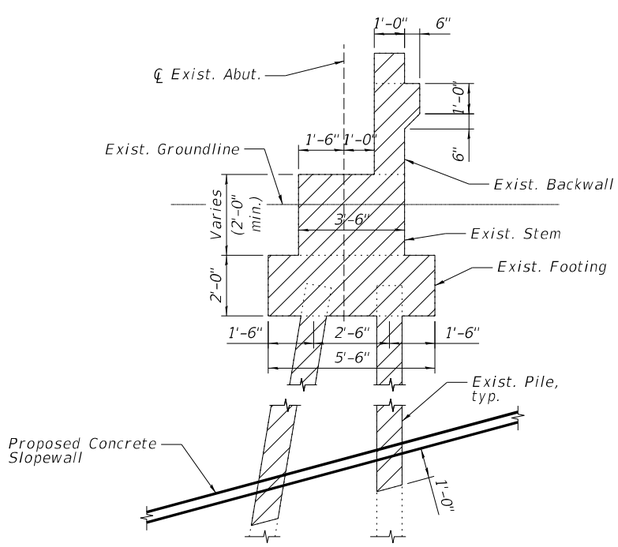

SECTION A-A

LEGEND

- Stage 1 Removal
- Stage 2 Removal
- Stage 3 Removal

NOTES:

1. All removal dimensions and details are approximate based on the existing plans and shall be confirmed by the Contractor prior to beginning removal.
2. Payment for substructure removal, as shown herein, shall be included in the cost for Removal of Existing Structures No. 3 for SB (SN 101-0210) and Removal of Existing Structures No. 4 for NB (SN 101-0211).
3. Work this sheet with superstructure removal limits and staging shown on Sheets 6 and 7 of 92.

MODEL: sMODELNAMES
FILE NAME: c:\pwworkdir\benesch projects\projects\dms65238\D264C24-1010210_0211-sht-exabutremoval.dgn

benesch
Alfred Benesch & Company
35 W Wacker Drive, Suite 3300
Chicago, Illinois 60601
312-565-0450 Job No. 10800

USER NAME =	DESIGNED - AAB	REVISED -	
	CHECKED - MFH	REVISED -	
PLOT SCALE =	DRAWN - KMS	REVISED -	
PLOT DATE =	CHECKED - MFH	REVISED -	

STATE OF ILLINOIS
DEPARTMENT OF TRANSPORTATION

EXISTING ABUTMENT REMOVAL DETAILS
STRUCTURE NO. 101-0210 & 101-0211

SHEET 10 OF 92 SHEETS

F.A.I. RTE.	SECTION	COUNTY	TOTAL SHEETS	SHEET NO.
39	(201-3)R & (4-1, 5)R	WINNEBAGO	1685	613

CONTRACT NO. 64C24

ILLINOIS | FED. AID PROJECT

2/11/2025 9:32:57 AM

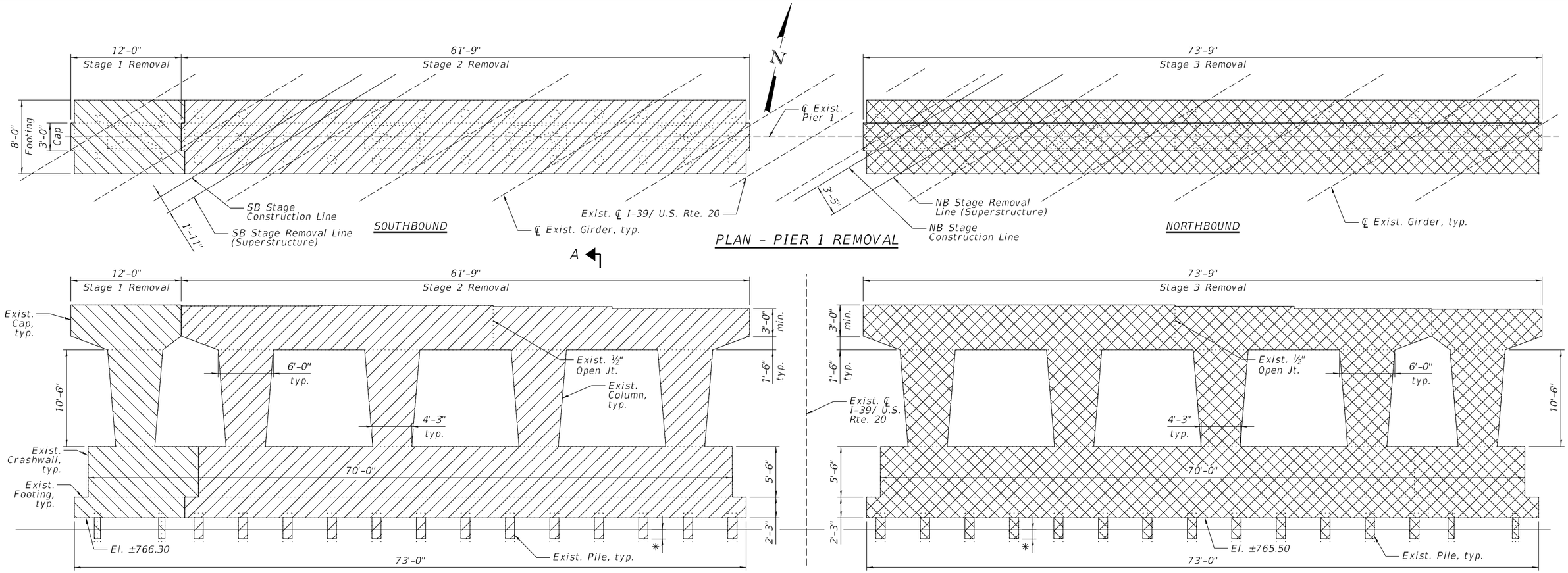

NOTES:

1. All removal dimensions and details are approximate based on the existing plans and shall be confirmed by the Contractor prior to beginning removal.
2. Payment for substructure removal, as shown herein, shall be included in the cost for Removal of Existing Structures No. 3 for SB (SN 101-0210) and Removal of Existing Structures No. 4 for NB (SN 101-0211).
3. Work this sheet with superstructure removal limits and staging shown on Sheets 6 and 7 of 92.

MODEL: sMODELNAMES
FILE NAME: c:\pwworkdir\benesch projects\projects\dms65238\D264C24-1010210_0211-sht-pierrem1.dgn

benesch
Alfred Benesch & Company
35 W Wacker Drive, Suite 3300
Chicago, Illinois 60601
312/456-0450 Job No. 10800

USER NAME =	DESIGNED - AAB	REVISED -	
	CHECKED - MFH	REVISED -	
PLOT SCALE =	DRAWN - KMS	REVISED -	
PLOT DATE =	CHECKED - MFH	REVISED -	

STATE OF ILLINOIS
DEPARTMENT OF TRANSPORTATION

EXISTING PIER REMOVAL DETAILS (1 OF 2)
STRUCTURE NO. 101-0210 & 101-0211

SHEET 11 OF 92 SHEETS

F.A.I. RTE.	SECTION	COUNTY	TOTAL SHEETS	SHEET NO.
39	(201-3)R & (4-1, 5)R	WINNEBAGO	1685	614
		CONTRACT NO. 64C24		
	ILLINOIS	FED. AID PROJECT		

2/11/2025 9:33:01 AM

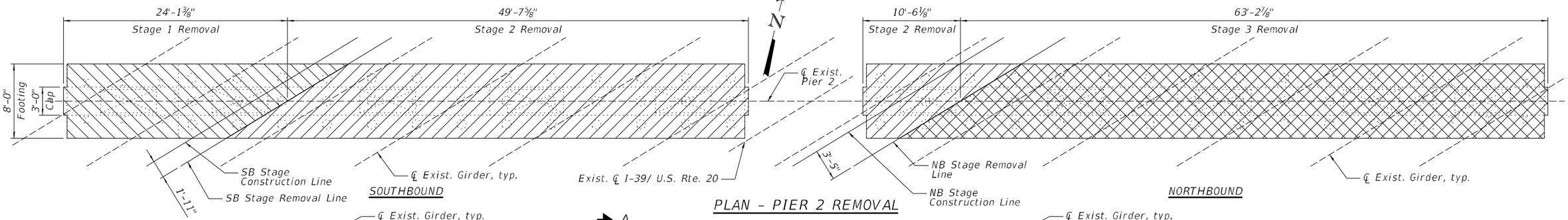

PLAN - PIER 2 REMOVAL

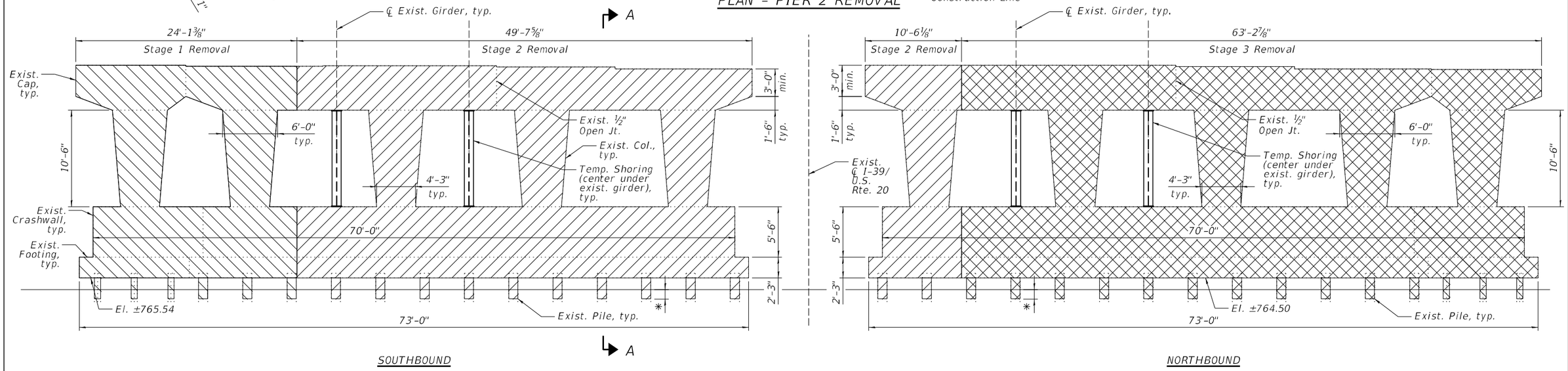

ELEVATION - PIER 2 REMOVAL
(Looking north)

* See Section A-A

TEMPORARY SHORING SERVICE LOADS
(at ea. location)

Case	Load (k)
DL	166.1
LL	65.9

BILL OF MATERIAL SB (SN 101-0210)

Item	Unit	Total
Temporary Shoring	Each	2

BILL OF MATERIAL NB (SN 101-0211)

Item	Unit	Total
Temporary Shoring	Each	2

LEGEND

- Stage 1 Removal
- Stage 2 Removal
- Stage 3 Removal

NOTES:

1. All removal dimensions and details are approximate based on the existing plans and shall be confirmed by the Contractor prior to beginning removal.
2. Payment for substructure removal, as shown herein, shall be included in the cost for Removal of Existing Structures No. 3 for SB (SN 101-0210) and Removal of Existing Structures No. 4 for NB (SN 101-0211).
3. Work this sheet with superstructure removal limits and staging shown on Sheets 6 and 7 of 92.
4. See Sheet 11 of 92 for Section A-A.
5. Temporary shoring shall be installed prior to Stage 1 removal for SB and prior to Stage 2 removal for NB.
6. See Special Provision for Temporary Shoring for additional information.

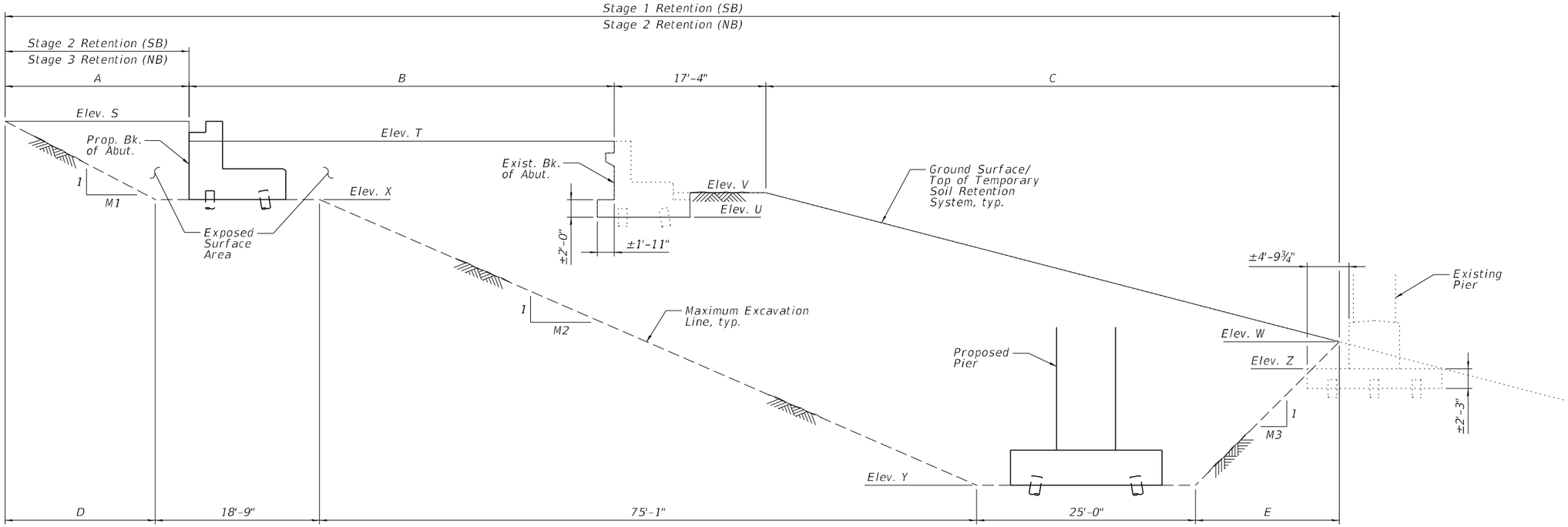

ELEVATION - TEMPORARY SOIL RETENTION SYSTEM

(Looking west at south abutment, north abutment opposite hand)

DIMENSIONS AND ELEVATIONS

Abut.	Bound	A	B	C	D	E	M1	M2	M3	S	T	U	V	W	X	Y	Z
S. Abut.	SB	22'-3"	±48'-7"	±65'-6"	18'-5"	±16'-5"	1.9	2.3	1.0	797.47	±795.06	±785.86	±788.68	±771.66	787.90	755.25	±768.55
	NB	22'-11"	±48'-7"	±65'-6"	19'-1"	±16'-5"	1.9	2.3	1.0	797.75	±794.53	±785.24	±788.68	±771.66	787.84	755.25	±767.75
N. Abut.	SB	23'-0"	±31'-8"	±84'-0"	19'-2"	±18'-0"	1.9	2.4	1.9	795.89	±793.20	±783.79	±786.46	±764.63	785.92	755.25	±767.79
	NB	24'-10"	±31'-8"	±84'-0"	21'-0"	±18'-0"	1.9	2.6	1.9	794.72	±792.08	±782.57	±786.46	±764.63	783.81	755.25	±766.75

BILL OF MATERIAL SB (SN 101-0210)

Item	Unit	Total
Temporary Soil Retention System	Sq. Ft.	4,265

BILL OF MATERIAL NB (SN 101-0211)

Item	Unit	Total
Temporary Soil Retention System	Sq. Ft.	4,332

NOTES:

1. A cantilevered sheet piling design does not appear feasible and additional members or other retention systems may be necessary. The Contractor shall submit a temporary soil retention system design including plan details and calculations for review and acceptance by the Engineer.

2. All slopes and dimensions are measured along the temporary soil retention system.

3. Plan dimensions and details relative to the existing structure have been taken from existing plans and are subject to nominal construction variations. The Contractor shall field verify existing dimensions and details affecting the temporary soil retention system and make necessary approved adjustments prior to construction or ordering of materials. Such variations shall not be cause for additional compensation for a change in scope of work; however, the Contractor will be paid for the quantity actually furnished at the unit price bid for the work.

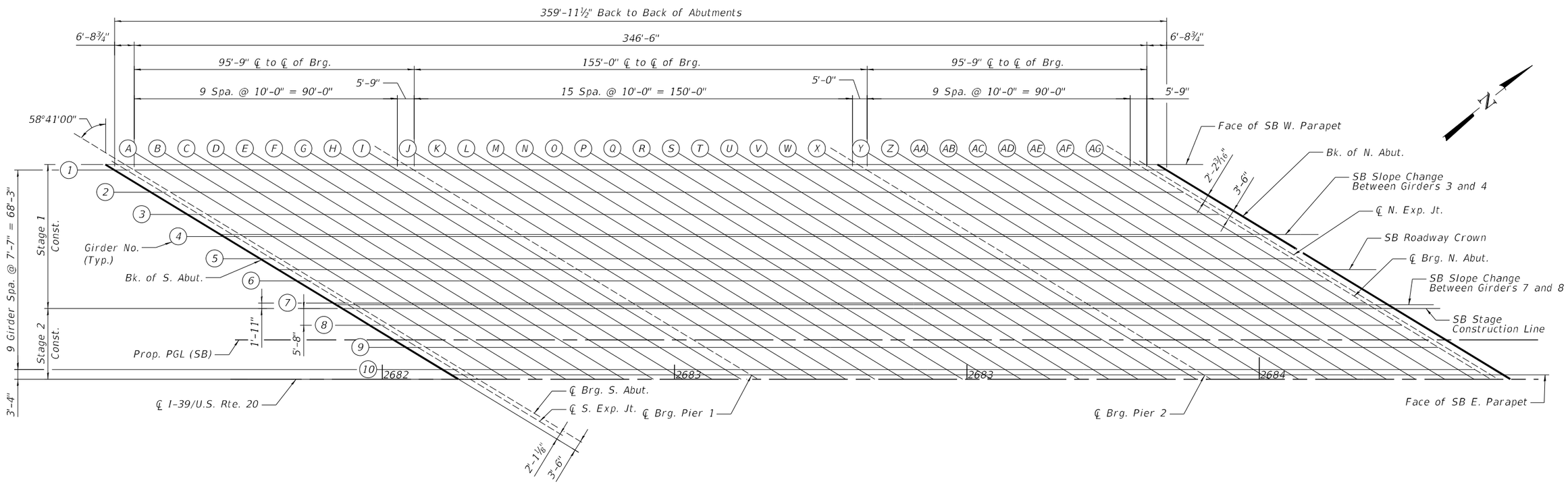

PLAN

MODEL: $MODELNAMES
FILE NAME: c:\pwworkdir\benesch projects\projects\dms65238\D264C24-1010210_0211-sht-tselpln1.dgn

benesch	USER NAME =	DESIGNED - AAB	REVISED -	STATE OF ILLINOIS DEPARTMENT OF TRANSPORTATION	TOP OF SLAB ELEVATIONS PLAN (SOUTHBOUND) STRUCTURE NO. 101-0210 & 101-0211	F.A.I. RTE.	SECTION	COUNTY	TOTAL SHEETS	SHEET NO.
Alfred Benesch & Company 35 W Wacker Drive, Suite 3300 Chicago, Illinois 60601 312/969-0050 Job No. 10800		CHECKED - KMP	REVISED -			39	(201-3)R & (4-1, 5)R	WINNEBAGO	1685	617
	PLOT SCALE =	DRAWN - KMS	REVISED -			CONTRACT NO. 64C24				
	PLOT DATE =	CHECKED - KMP	REVISED -		SHEET 14 OF 92 SHEETS	ILLINOIS	FED. AID PROJECT			

2/11/2025 9:33:13 AM

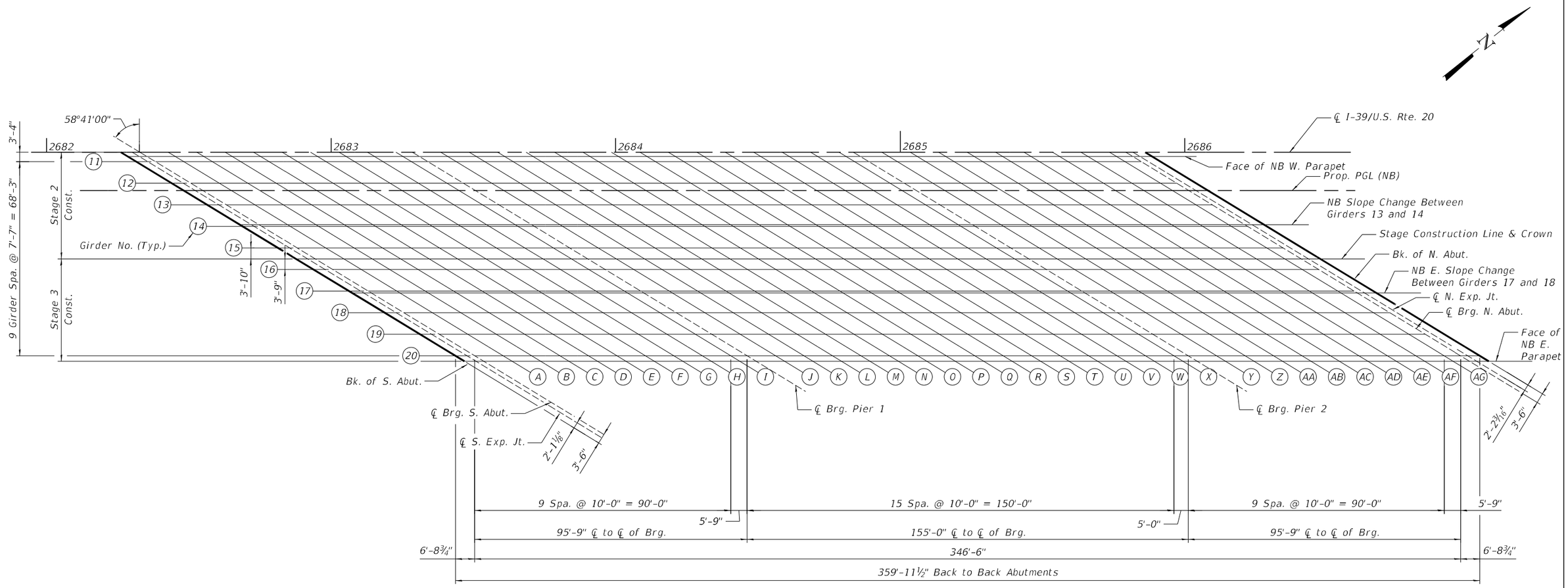

PLAN

MODEL: $MODELNAME$
FILE NAME: c:\pwworkdir\benesch projects\projects\dms65238\D264C24-1010210_0211-sht-tselplh2.dgn

benesch
Alfred Benesch & Company
35 W Wacker Drive, Suite 3300
Chicago, Illinois 60601
312-956-0450 Job No. 10800

USER NAME =	DESIGNED - AAB	REVISED -	
	CHECKED - KMP	REVISED -	
PLOT SCALE =	DRAWN - KMS	REVISED -	
PLOT DATE =	CHECKED - KMP	REVISED -	

STATE OF ILLINOIS
DEPARTMENT OF TRANSPORTATION

TOP OF SLAB ELEVATIONS PLAN (NORTHBOUND)
STRUCTURE NO. 101-0210 & 101-0211

SHEET 15 OF 92 SHEETS

F.A.I. RTE.	SECTION	COUNTY	TOTAL SHEETS	SHEET NO.
39	(201-3)R & (4-1, 5)R	WINNEBAGO	1685	618

CONTRACT NO. 64C24

ILLINOIS FED. AID PROJECT

2/11/2025 9:33:17 AM

FACE OF SB. W. PARAPET

Location	Station	Offset	Theoretical Grade Elevations	Theoretical Grade Elevations Adjusted For Dead Load Deflection & Grinding
BK. S. ABUT.	2681+05.24	-73.50	796.66	796.68
CL. S. EXP. JT.	2681+09.27	-73.50	796.68	796.70
CL. BRG. S. ABUT.	2681+11.97	-73.50	796.70	796.72
A	2681+21.97	-73.50	796.75	796.79
B	2681+31.97	-73.50	796.81	796.86
C	2681+41.97	-73.50	796.85	796.91
D	2681+51.97	-73.50	796.90	796.95
E	2681+61.97	-73.50	796.94	796.98
F	2681+71.97	-73.50	796.97	797.00
G	2681+81.97	-73.50	797.00	797.02
H	2681+91.97	-73.50	797.03	797.04
I	2682+01.97	-73.50	797.05	797.07
CL. BRG. PIER 1	2682+07.72	-73.50	797.07	797.09
J	2682+17.72	-73.50	797.08	797.14
K	2682+27.72	-73.50	797.10	797.19
L	2682+37.72	-73.50	797.11	797.25
M	2682+47.72	-73.50	797.11	797.30
N	2682+57.72	-73.50	797.11	797.35
O	2682+67.72	-73.50	797.11	797.38
P	2682+77.72	-73.50	797.10	797.39
Q	2682+87.72	-73.50	797.09	797.39
R	2682+97.72	-73.50	797.08	797.36
S	2683+07.72	-73.50	797.06	797.31
T	2683+17.72	-73.50	797.04	797.26
U	2683+27.72	-73.50	797.01	797.18
V	2683+37.72	-73.50	796.98	797.10
W	2683+47.72	-73.50	796.95	797.02
X	2683+57.72	-73.50	796.91	796.95
CL. BRG. PIER 2	2683+62.72	-73.50	796.89	796.91
Y	2683+72.72	-73.50	796.84	796.85
Z	2683+82.72	-73.50	796.79	796.80
AA	2683+92.72	-73.50	796.74	796.75
AB	2684+02.72	-73.50	796.69	796.71
AC	2684+12.72	-73.50	796.63	796.67
AD	2684+22.72	-73.50	796.56	796.61
AE	2684+32.72	-73.50	796.49	796.55
AF	2684+42.72	-73.50	796.42	796.47
AG	2684+52.72	-73.50	796.34	796.38
CL. BRG. N. ABUT.	2684+58.47	-73.50	796.30	796.32
CL. N. EXP. JT.	2684+61.00	-73.50	796.28	796.30
BK. N. ABUT.	2684+65.20	-73.50	796.24	796.26

GIRDER 1

Location	Station	Offset	Theoretical Grade Elevations	Theoretical Grade Elevations Adjusted For Dead Load Deflection & Grinding
BK. S. ABUT.	2681+08.40	-71.58	796.72	796.74
CL. S. EXP. JT.	2681+12.43	-71.58	796.74	796.76
CL. BRG. S. ABUT.	2681+15.13	-71.58	796.75	796.78
A	2681+25.13	-71.58	796.81	796.85
B	2681+35.13	-71.58	796.86	796.91
C	2681+45.13	-71.58	796.91	796.97
D	2681+55.13	-71.58	796.95	797.00
E	2681+65.13	-71.58	796.99	797.03
F	2681+75.13	-71.58	797.02	797.05
G	2681+85.13	-71.58	797.05	797.06
H	2681+95.13	-71.58	797.08	797.08
I	2682+05.13	-71.58	797.10	797.11
CL. BRG. PIER 1	2682+10.88	-71.58	797.11	797.13
J	2682+20.88	-71.58	797.13	797.18
K	2682+30.88	-71.58	797.14	797.23
L	2682+40.88	-71.58	797.15	797.29
M	2682+50.88	-71.58	797.15	797.34
N	2682+60.88	-71.58	797.15	797.39
O	2682+70.88	-71.58	797.15	797.42
P	2682+80.88	-71.58	797.14	797.43
Q	2682+90.88	-71.58	797.13	797.42
R	2683+00.88	-71.58	797.11	797.39
S	2683+10.88	-71.58	797.09	797.35
T	2683+20.88	-71.58	797.07	797.29
U	2683+30.88	-71.58	797.04	797.21
V	2683+40.88	-71.58	797.01	797.13
W	2683+50.88	-71.58	796.97	797.05
X	2683+60.88	-71.58	796.93	796.97
CL. BRG. PIER 2	2683+65.88	-71.58	796.91	796.93
Y	2683+75.88	-71.58	796.87	796.87
Z	2683+85.88	-71.58	796.82	796.82
AA	2683+95.88	-71.58	796.76	796.78
AB	2684+05.88	-71.58	796.71	796.73
AC	2684+15.88	-71.58	796.64	796.69
AD	2684+25.88	-71.58	796.58	796.63
AE	2684+35.88	-71.58	796.51	796.56
AF	2684+45.88	-71.58	796.44	796.48
AG	2684+55.88	-71.58	796.36	796.39
CL. BRG. N. ABUT.	2684+61.63	-71.58	796.31	796.33
CL. N. EXP. JT.	2684+64.16	-71.58	796.29	796.31
BK. N. ABUT.	2684+68.36	-71.58	796.26	796.28

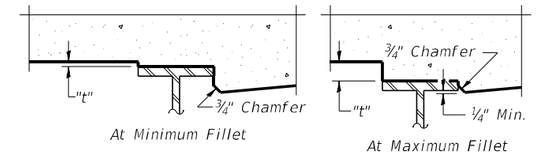

At Minimum Fillet

At Maximum Fillet

To determine "t": After all structural steel has been erected, elevations of the top flanges of the girders shall be taken at intervals shown on sheets 14 & 15 of 92 . These elevations subtracted from the "Theoretical Grade Elevations Adjusted for Dead Load Deflection and Grinding" shown below and on sheets 17 thru 27 of 92 , minus the initial slab thickness prior to grinding, equals the fillet heights "t" above top flange of girders.

The slab is to be ground after curing to achieve smoothness, but the slab is not to be ground to elevations below the "Theoretical Grade Elevations" shown below and on Sheets 17 thru 27 of 92 . For grinding the deck, see Special Provisions.

FILLET HEIGHTS

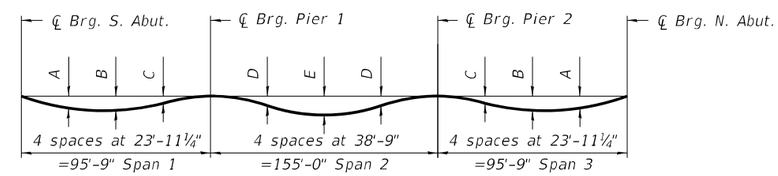

DEAD LOAD DEFLECTION DIAGRAM

(Includes weight of concrete only.)
(See Dead Load Deflection Table.)

Note:
The above deflections are not to be used in the field if the engineer is working from the grade elevations adjusted for dead load deflections and grinding as shown in the tables on this sheet and Sheets 17 thru 27 of 92 .

DEAD LOAD DEFLECTION TABLE

(All deflections given in inches.)

Girders	A	B	C	D	E
1,10,11,20	7/16	5/16	-1/8	2	3 5/16
2,9,12,19	7/16	5/16	-1/8	1 7/8	3 1/16
3,8,13,18	3/8	1/4	-1/8	1 5/8	2 3/4
4-7,14-17	3/8	1/4	-1/16	1 7/16	2 7/16

GIRDER 2

Location	Station	Offset	Theoretical Grade Elevations	Theoretical Grade Elevations Adjusted For Dead Load Deflection & Grinding
BK. S. ABUT.	2681+20.86	-64.00	796.94	796.96
CL. S. EXP. JT.	2681+24.89	-64.00	796.96	796.98
CL. BRG. S. ABUT.	2681+27.59	-64.00	796.97	796.99
A	2681+37.59	-64.00	797.02	797.06
B	2681+47.59	-64.00	797.07	797.12
C	2681+57.59	-64.00	797.11	797.17
D	2681+67.59	-64.00	797.15	797.20
E	2681+77.59	-64.00	797.18	797.22
F	2681+87.59	-64.00	797.21	797.24
G	2681+97.59	-64.00	797.23	797.25
H	2682+07.59	-64.00	797.26	797.26
I	2682+17.59	-64.00	797.27	797.29
CL. BRG. PIER 1	2682+23.34	-64.00	797.28	797.30
J	2682+33.34	-64.00	797.29	797.35
K	2682+43.34	-64.00	797.30	797.39
L	2682+53.34	-64.00	797.30	797.44
M	2682+63.34	-64.00	797.30	797.48
N	2682+73.34	-64.00	797.30	797.52
O	2682+83.34	-64.00	797.29	797.54
P	2682+93.34	-64.00	797.28	797.55
Q	2683+03.34	-64.00	797.26	797.53
R	2683+13.34	-64.00	797.24	797.50
S	2683+23.34	-64.00	797.21	797.45
T	2683+33.34	-64.00	797.19	797.39
U	2683+43.34	-64.00	797.15	797.31
V	2683+53.34	-64.00	797.12	797.23
W	2683+63.34	-64.00	797.07	797.15
X	2683+73.34	-64.00	797.03	797.07
CL. BRG. PIER 2	2683+78.34	-64.00	797.01	797.03
Y	2683+88.34	-64.00	796.96	796.96
Z	2683+98.34	-64.00	796.90	796.91
AA	2684+08.34	-64.00	796.84	796.86
AB	2684+18.34	-64.00	796.78	796.81
AC	2684+28.34	-64.00	796.71	796.75
AD	2684+38.34	-64.00	796.64	796.69
AE	2684+48.34	-64.00	796.57	796.62
AF	2684+58.34	-64.00	796.49	796.53
AG	2684+68.34	-64.00	796.41	796.44
CL. BRG. N. ABUT.	2684+74.09	-64.00	796.36	796.38
CL. N. EXP. JT.	2684+76.62	-64.00	796.34	796.36
BK. N. ABUT.	2684+80.82	-64.00	796.30	796.32

GIRDER 3

Location	Station	Offset	Theoretical Grade Elevations	Theoretical Grade Elevations Adjusted For Dead Load Deflection & Grinding
BK. S. ABUT.	2681+33.33	-56.41	797.15	797.17
CL. S. EXP. JT.	2681+37.36	-56.41	797.17	797.19
CL. BRG. S. ABUT.	2681+40.06	-56.41	797.19	797.21
A	2681+50.06	-56.41	797.23	797.27
B	2681+60.06	-56.41	797.27	797.32
C	2681+70.06	-56.41	797.31	797.36
D	2681+80.06	-56.41	797.34	797.39
E	2681+90.06	-56.41	797.37	797.41
F	2682+00.06	-56.41	797.39	797.42
G	2682+10.06	-56.41	797.41	797.43
H	2682+20.06	-56.41	797.43	797.44
I	2682+30.06	-56.41	797.44	797.46
CL. BRG. PIER 1	2682+35.81	-56.41	797.45	797.47
J	2682+45.81	-56.41	797.45	797.50
K	2682+55.81	-56.41	797.45	797.54
L	2682+65.81	-56.41	797.45	797.58
M	2682+75.81	-56.41	797.45	797.61
N	2682+85.81	-56.41	797.44	797.64
O	2682+95.81	-56.41	797.42	797.65
P	2683+05.81	-56.41	797.41	797.65
Q	2683+15.81	-56.41	797.38	797.63
R	2683+25.81	-56.41	797.36	797.60
S	2683+35.81	-56.41	797.33	797.54
T	2683+45.81	-56.41	797.30	797.48
U	2683+55.81	-56.41	797.26	797.40
V	2683+65.81	-56.41	797.22	797.32
W	2683+75.81	-56.41	797.17	797.24
X	2683+85.81	-56.41	797.12	797.16
CL. BRG. PIER 2	2683+90.81	-56.41	797.09	797.12
Y	2684+00.81	-56.41	797.04	797.05
Z	2684+10.81	-56.41	796.98	796.99
AA	2684+20.81	-56.41	796.92	796.93
AB	2684+30.81	-56.41	796.85	796.87
AC	2684+40.81	-56.41	796.78	796.81
AD	2684+50.81	-56.41	796.70	796.75
AE	2684+60.81	-56.41	796.62	796.67
AF	2684+70.81	-56.41	796.54	796.58
AG	2684+80.81	-56.41	796.45	796.48
CL. BRG. N. ABUT.	2684+86.56	-56.41	796.40	796.42
CL. N. EXP. JT.	2684+89.09	-56.41	796.38	796.40
BK. N. ABUT.	2684+93.29	-64.00	796.34	796.36

SB SLOPE CHANGE BETWEEN GIRDERS 3 AND 4

Location	Station	Offset	Theoretical Grade Elevations	Theoretical Grade Elevations Adjusted For Dead Load Deflection & Grinding
BK. S. ABUT.	2681+44.69	-49.50	797.34	797.37
CL. S. EXP. JT.	2681+48.72	-49.50	797.36	797.38
CL. BRG. S. ABUT.	2681+51.42	-49.50	797.37	797.39
A	2681+61.42	-49.50	797.41	797.45
B	2681+71.42	-49.50	797.45	797.50
C	2681+81.42	-49.50	797.48	797.53
D	2681+91.42	-49.50	797.51	797.56
E	2682+01.42	-49.50	797.53	797.57
F	2682+11.42	-49.50	797.55	797.58
G	2682+21.42	-49.50	797.57	797.58
H	2682+31.42	-49.50	797.58	797.59
I	2682+41.42	-49.50	797.59	797.60
CL. BRG. PIER 1	2682+47.17	-49.50	797.59	797.61
J	2682+57.17	-49.50	797.59	797.64
K	2682+67.17	-49.50	797.59	797.67
L	2682+77.17	-49.50	797.58	797.69
M	2682+87.17	-49.50	797.57	797.72
N	2682+97.17	-49.50	797.56	797.74
O	2683+07.17	-49.50	797.54	797.74
P	2683+17.17	-49.50	797.52	797.73
Q	2683+27.17	-49.50	797.49	797.71
R	2683+37.17	-49.50	797.46	797.67
S	2683+47.17	-49.50	797.43	797.62
T	2683+57.17	-49.50	797.39	797.55
U	2683+67.17	-49.50	797.35	797.48
V	2683+77.17	-49.50	797.30	797.40
W	2683+87.17	-49.50	797.25	797.31
X	2683+97.17	-49.50	797.20	797.23
CL. BRG. PIER 2	2684+02.17	-49.50	797.17	797.19
Y	2684+12.17	-49.50	797.11	797.12
Z	2684+22.17	-49.50	797.04	797.05
AA	2684+32.17	-49.50	796.98	796.99
AB	2684+42.17	-49.50	796.90	796.93
AC	2684+52.17	-49.50	796.83	796.86
AD	2684+62.17	-49.50	796.75	796.79
AE	2684+72.17	-49.50	796.66	796.71
AF	2684+82.17	-49.50	796.58	796.62
AG	2684+92.17	-49.50	796.48	796.51
CL. BRG. N. ABUT.	2684+97.92	-49.50	796.43	796.45
CL. N. EXP. JT.	2685+00.45	-49.50	796.41	796.43
BK. N. ABUT.	2685+04.65	-49.50	796.36	796.38

GIRDER 4

Location	Station	Offset	Theoretical Grade Elevations	Theoretical Grade Elevations Adjusted For Dead Load Deflection & Grinding
BK. S. ABUT.	2681+45.79	-48.83	797.36	797.38
CL. S. EXP. JT.	2681+49.82	-48.83	797.38	797.40
CL. BRG. S. ABUT.	2681+52.52	-48.83	797.39	797.41
A	2681+62.52	-48.83	797.43	797.46
B	2681+72.52	-48.83	797.46	797.51
C	2681+82.52	-48.83	797.49	797.55
D	2681+92.52	-48.83	797.52	797.57
E	2682+02.52	-48.83	797.55	797.58
F	2682+12.52	-48.83	797.57	797.59
G	2682+22.52	-48.83	797.58	797.60
H	2682+32.52	-48.83	797.59	797.60
I	2682+42.52	-48.83	797.60	797.61
CL. BRG. PIER 1	2682+48.27	-48.83	797.60	797.62
J	2682+58.27	-48.83	797.60	797.65
K	2682+68.27	-48.83	797.60	797.68
L	2682+78.27	-48.83	797.59	797.70
M	2682+88.27	-48.83	797.58	797.73
N	2682+98.27	-48.83	797.57	797.74
O	2683+08.27	-48.83	797.55	797.75
P	2683+18.27	-48.83	797.53	797.74
Q	2683+28.27	-48.83	797.50	797.72
R	2683+38.27	-48.83	797.47	797.68
S	2683+48.27	-48.83	797.43	797.63
T	2683+58.27	-48.83	797.40	797.56
U	2683+68.27	-48.83	797.35	797.48
V	2683+78.27	-48.83	797.31	797.40
W	2683+88.27	-48.83	797.26	797.32
X	2683+98.27	-48.83	797.20	797.24
CL. BRG. PIER 2	2684+03.27	-48.83	797.17	797.19
Y	2684+13.27	-48.83	797.11	797.12
Z	2684+23.27	-48.83	797.05	797.06
AA	2684+33.27	-48.83	796.98	796.99
AB	2684+43.27	-48.83	796.91	796.93
AC	2684+53.27	-48.83	796.83	796.87
AD	2684+63.27	-48.83	796.75	796.79
AE	2684+73.27	-48.83	796.67	796.71
AF	2684+83.27	-48.83	796.58	796.62
AG	2684+93.27	-48.83	796.48	796.51
CL. BRG. N. ABUT.	2684+99.02	-48.83	796.43	796.45
CL. N. EXP. JT.	2685+01.55	-48.83	796.40	796.43
BK. N. ABUT.	2685+05.75	-48.83	796.36	796.38

GIRDER 5

Location	Station	Offset	Theoretical Grade Elevations	Theoretical Grade Elevations Adjusted For Dead Load Deflection & Grinding
BK. S. ABUT.	2681+58.25	-41.25	797.53	797.55
CL. S. EXP. JT.	2681+62.28	-41.25	797.54	797.56
CL. BRG. S. ABUT.	2681+64.98	-41.25	797.55	797.57
A	2681+74.98	-41.25	797.59	797.62
B	2681+84.98	-41.25	797.62	797.66
C	2681+94.98	-41.25	797.64	797.69
D	2682+04.98	-41.25	797.66	797.71
E	2682+14.98	-41.25	797.68	797.72
F	2682+24.98	-41.25	797.70	797.72
G	2682+34.98	-41.25	797.71	797.72
H	2682+44.98	-41.25	797.71	797.72
I	2682+54.98	-41.25	797.72	797.73
CL. BRG. PIER 1	2682+60.73	-41.25	797.72	797.74
J	2682+70.73	-41.25	797.71	797.76
K	2682+80.73	-41.25	797.71	797.78
L	2682+90.73	-41.25	797.69	797.80
M	2683+00.73	-41.25	797.68	797.82
N	2683+10.73	-41.25	797.66	797.83
O	2683+20.73	-41.25	797.63	797.84
P	2683+30.73	-41.25	797.61	797.82
Q	2683+40.73	-41.25	797.57	797.79
R	2683+50.73	-41.25	797.54	797.75
S	2683+60.73	-41.25	797.50	797.69
T	2683+70.73	-41.25	797.46	797.62
U	2683+80.73	-41.25	797.41	797.54
V	2683+90.73	-41.25	797.36	797.45
W	2684+00.73	-41.25	797.30	797.36
X	2684+10.73	-41.25	797.24	797.28
CL. BRG. PIER 2	2684+15.73	-41.25	797.21	797.23
Y	2684+25.73	-41.25	797.14	797.15
Z	2684+35.73	-41.25	797.08	797.08
AA	2684+45.73	-41.25	797.00	797.02
AB	2684+55.73	-41.25	796.92	796.95
AC	2684+65.73	-41.25	796.84	796.88
AD	2684+75.73	-41.25	796.76	796.80
AE	2684+85.73	-41.25	796.67	796.71
AF	2684+95.73	-41.25	796.57	796.61
AG	2685+05.73	-41.25	796.48	796.51
CL. BRG. N. ABUT.	2685+11.48	-41.25	796.42	796.44
CL. N. EXP. JT.	2685+14.01	-41.25	796.39	796.41
BK. N. ABUT.	2685+18.21	-41.25	796.35	796.37

SB ROADWAY CROWN

Location	Station	Offset	Theoretical Grade Elevations	Theoretical Grade Elevations Adjusted For Dead Load Deflection & Grinding
BK. S. ABUT.	2681+64.41	-37.50	797.60	797.63
CL. S. EXP. JT.	2681+68.44	-37.50	797.62	797.64
CL. BRG. S. ABUT.	2681+71.14	-37.50	797.63	797.65
A	2681+81.14	-37.50	797.66	797.70
B	2681+91.14	-37.50	797.69	797.74
C	2682+01.14	-37.50	797.71	797.76
D	2682+11.14	-37.50	797.73	797.78
E	2682+21.14	-37.50	797.75	797.79
F	2682+31.14	-37.50	797.76	797.79
G	2682+41.14	-37.50	797.77	797.78
H	2682+51.14	-37.50	797.77	797.78
I	2682+61.14	-37.50	797.77	797.79
CL. BRG. PIER 1	2682+66.89	-37.50	797.77	797.79
J	2682+76.89	-37.50	797.76	797.81
K	2682+86.89	-37.50	797.75	797.83
L	2682+96.89	-37.50	797.74	797.85
M	2683+06.89	-37.50	797.72	797.87
N	2683+16.89	-37.50	797.70	797.88
O	2683+26.89	-37.50	797.67	797.88
P	2683+36.89	-37.50	797.64	797.86
Q	2683+46.89	-37.50	797.61	797.83
R	2683+56.89	-37.50	797.57	797.78
S	2683+66.89	-37.50	797.53	797.72
T	2683+76.89	-37.50	797.48	797.65
U	2683+86.89	-37.50	797.43	797.56
V	2683+96.89	-37.50	797.38	797.47
W	2684+06.89	-37.50	797.32	797.38
X	2684+16.89	-37.50	797.26	797.29
CL. BRG. PIER 2	2684+21.89	-37.50	797.23	797.25
Y	2684+31.89	-37.50	797.16	797.17
Z	2684+41.89	-37.50	797.09	797.09
AA	2684+51.89	-37.50	797.01	797.02
AB	2684+61.89	-37.50	796.93	796.96
AC	2684+71.89	-37.50	796.85	796.88
AD	2684+81.89	-37.50	796.76	796.80
AE	2684+91.89	-37.50	796.67	796.71
AF	2685+01.89	-37.50	796.57	796.61
AG	2685+11.89	-37.50	796.47	796.50
CL. BRG. N. ABUT.	2685+17.64	-37.50	796.41	796.43
CL. N. EXP. JT.	2685+20.17	-37.50	796.39	796.41
BK. N. ABUT.	2685+24.37	-37.50	796.34	796.36

GIRDER 6

Location	Station	Offset	Theoretical Grade Elevations	Theoretical Grade Elevations Adjusted For Dead Load Deflection & Grinding
BK. S. ABUT.	2681+70.72	-33.66	797.57	797.59
CL. S. EXP. JT.	2681+74.75	-33.66	797.58	797.60
CL. BRG. S. ABUT.	2681+77.45	-33.66	797.59	797.61
A	2681+87.45	-33.66	797.62	797.66
B	2681+97.45	-33.66	797.65	797.69
C	2682+07.45	-33.66	797.67	797.72
D	2682+17.45	-33.66	797.69	797.73
E	2682+27.45	-33.66	797.70	797.74
F	2682+37.45	-33.66	797.71	797.73
G	2682+47.45	-33.66	797.71	797.73
H	2682+57.45	-33.66	797.72	797.73
I	2682+67.45	-33.66	797.71	797.73
CL. BRG. PIER 1	2682+73.20	-33.66	797.71	797.73
J	2682+83.20	-33.66	797.70	797.75
K	2682+93.20	-33.66	797.69	797.76
L	2683+03.20	-33.66	797.67	797.78
M	2683+13.20	-33.66	797.65	797.80
N	2683+23.20	-33.66	797.63	797.80
O	2683+33.20	-33.66	797.60	797.80
P	2683+43.20	-33.66	797.57	797.78
Q	2683+53.20	-33.66	797.53	797.75
R	2683+63.20	-33.66	797.49	797.70
S	2683+73.20	-33.66	797.44	797.63
T	2683+83.20	-33.66	797.39	797.56
U	2683+93.20	-33.66	797.34	797.47
V	2684+03.20	-33.66	797.29	797.38
W	2684+13.20	-33.66	797.23	797.28
X	2684+23.20	-33.66	797.16	797.19
CL. BRG. PIER 2	2684+28.20	-33.66	797.13	797.15
Y	2684+38.20	-33.66	797.06	797.07
Z	2684+48.20	-33.66	796.98	796.99
AA	2684+58.20	-33.66	796.90	796.92
AB	2684+68.20	-33.66	796.82	796.85
AC	2684+78.20	-33.66	796.73	796.77
AD	2684+88.20	-33.66	796.64	796.69
AE	2684+98.20	-33.66	796.55	796.59
AF	2685+08.20	-33.66	796.45	796.49
AG	2685+18.20	-33.66	796.35	796.38
CL. BRG. N. ABUT.	2685+23.95	-33.66	796.29	796.31
CL. N. EXP. JT.	2685+26.48	-33.66	796.26	796.28
BK. N. ABUT.	2685+30.68	-33.66	796.22	796.24

GIRDER 7

Location	Station	Offset	Theoretical Grade Elevations	Theoretical Grade Elevations Adjusted For Dead Load Deflection & Grinding
BK. S. ABUT.	2681+83.18	-26.08	797.50	797.52
CL. S. EXP. JT.	2681+87.21	-26.08	797.51	797.53
CL. BRG. S. ABUT.	2681+89.91	-26.08	797.51	797.53
A	2681+99.91	-26.08	797.54	797.58
B	2682+09.91	-26.08	797.56	797.61
C	2682+19.91	-26.08	797.58	797.63
D	2682+29.91	-26.08	797.59	797.64
E	2682+39.91	-26.08	797.60	797.63
F	2682+49.91	-26.08	797.60	797.63
G	2682+59.91	-26.08	797.60	797.62
H	2682+69.91	-26.08	797.60	797.61
I	2682+79.91	-26.08	797.59	797.61
CL. BRG. PIER 1	2682+85.66	-26.08	797.58	797.61
J	2682+95.66	-26.08	797.57	797.62
K	2683+05.66	-26.08	797.55	797.63
L	2683+15.66	-26.08	797.53	797.64
M	2683+25.66	-26.08	797.51	797.65
N	2683+35.66	-26.08	797.48	797.65
O	2683+45.66	-26.08	797.44	797.64
P	2683+55.66	-26.08	797.41	797.62
Q	2683+65.66	-26.08	797.36	797.58
R	2683+75.66	-26.08	797.32	797.53
S	2683+85.66	-26.08	797.27	797.46
T	2683+95.66	-26.08	797.21	797.38
U	2684+05.66	-26.08	797.16	797.29
V	2684+15.66	-26.08	797.10	797.19
W	2684+25.66	-26.08	797.03	797.09
X	2684+35.66	-26.08	796.96	796.99
CL. BRG. PIER 2	2684+40.66	-26.08	796.92	796.95
Y	2684+50.66	-26.08	796.85	796.86
Z	2684+60.66	-26.08	796.77	796.78
AA	2684+70.66	-26.08	796.69	796.70
AB	2684+80.66	-26.08	796.60	796.62
AC	2684+90.66	-26.08	796.51	796.54
AD	2685+00.66	-26.08	796.41	796.46
AE	2685+10.66	-26.08	796.31	796.36
AF	2685+20.66	-26.08	796.21	796.25
AG	2685+30.66	-26.08	796.10	796.13
CL. BRG. N. ABUT.	2685+36.41	-26.08	796.04	796.06
CL. N. EXP. JT.	2685+38.94	-26.08	796.01	796.03
BK. N. ABUT.	2685+43.14	-26.08	795.96	795.98

SB SLOPE CHANGE BETWEEN GIRDERS 7 AND 8

Location	Station	Offset	Theoretical Grade Elevations	Theoretical Grade Elevations Adjusted For Dead Load Deflection & Grinding
BK. S. ABUT.	2681+84.14	-25.50	797.49	797.51
CL. S. EXP. JT.	2681+88.17	-25.50	797.50	797.52
CL. BRG. S. ABUT.	2681+90.87	-25.50	797.51	797.53
A	2682+00.87	-25.50	797.53	797.57
B	2682+10.87	-25.50	797.55	797.60
C	2682+20.87	-25.50	797.57	797.62
D	2682+30.87	-25.50	797.58	797.63
E	2682+40.87	-25.50	797.59	797.63
F	2682+50.87	-25.50	797.59	797.62
G	2682+60.87	-25.50	797.59	797.61
H	2682+70.87	-25.50	797.59	797.60
I	2682+80.87	-25.50	797.58	797.60
CL. BRG. PIER 1	2682+86.62	-25.50	797.57	797.60
J	2682+96.62	-25.50	797.56	797.61
K	2683+06.62	-25.50	797.54	797.62
L	2683+16.62	-25.50	797.52	797.63
M	2683+26.62	-25.50	797.49	797.64
N	2683+36.62	-25.50	797.46	797.64
O	2683+46.62	-25.50	797.43	797.63
P	2683+56.62	-25.50	797.39	797.61
Q	2683+66.62	-25.50	797.35	797.57
R	2683+76.62	-25.50	797.30	797.52
S	2683+86.62	-25.50	797.25	797.45
T	2683+96.62	-25.50	797.20	797.37
U	2684+06.62	-25.50	797.14	797.27
V	2684+16.62	-25.50	797.08	797.18
W	2684+26.62	-25.50	797.02	797.07
X	2684+36.62	-25.50	796.95	796.98
CL. BRG. PIER 2	2684+41.62	-25.50	796.91	796.93
Y	2684+51.62	-25.50	796.83	796.84
Z	2684+61.62	-25.50	796.75	796.76
AA	2684+71.62	-25.50	796.67	796.68
AB	2684+81.62	-25.50	796.58	796.61
AC	2684+91.62	-25.50	796.49	796.53
AD	2685+01.62	-25.50	796.39	796.44
AE	2685+11.62	-25.50	796.29	796.34
AF	2685+21.62	-25.50	796.19	796.23
AG	2685+31.62	-25.50	796.08	796.11
CL. BRG. N. ABUT.	2685+37.37	-25.50	796.02	796.04
CL. N. EXP. JT.	2685+39.90	-25.50	795.99	796.01
BK. N. ABUT.	2685+44.10	-25.50	795.94	795.96

SB STAGE CONSTRUCTION LINE

Location	Station	Offset	Theoretical Grade Elevations	Theoretical Grade Elevations Adjusted For Dead Load Deflection & Grinding
BK. S. ABUT.	2681+86.33	-24.17	797.47	797.49
CL. S. EXP. JT.	2681+90.36	-24.17	797.48	797.50
CL. BRG. S. ABUT.	2681+93.06	-24.17	797.49	797.51
A	2682+03.06	-24.17	797.51	797.55
B	2682+13.06	-24.17	797.53	797.58
C	2682+23.06	-24.17	797.54	797.60
D	2682+33.06	-24.17	797.56	797.60
E	2682+43.06	-24.17	797.56	797.60
F	2682+53.06	-24.17	797.57	797.59
G	2682+63.06	-24.17	797.57	797.58
H	2682+73.06	-24.17	797.56	797.57
I	2682+83.06	-24.17	797.55	797.57
CL. BRG. PIER 1	2682+88.81	-24.17	797.55	797.57
J	2682+98.81	-24.17	797.53	797.58
K	2683+08.81	-24.17	797.51	797.59
L	2683+18.81	-24.17	797.49	797.60
M	2683+28.81	-24.17	797.46	797.61
N	2683+38.81	-24.17	797.43	797.61
O	2683+48.81	-24.17	797.40	797.60
P	2683+58.81	-24.17	797.36	797.57
Q	2683+68.81	-24.17	797.31	797.53
R	2683+78.81	-24.17	797.27	797.48
S	2683+88.81	-24.17	797.22	797.41
T	2683+98.81	-24.17	797.16	797.33
U	2684+08.81	-24.17	797.10	797.23
V	2684+18.81	-24.17	797.04	797.13
W	2684+28.81	-24.17	796.97	797.03
X	2684+38.81	-24.17	796.90	796.94
CL. BRG. PIER 2	2684+43.81	-24.17	796.87	796.89
Y	2684+53.81	-24.17	796.79	796.80
Z	2684+63.81	-24.17	796.71	796.72
AA	2684+73.81	-24.17	796.62	796.64
AB	2684+83.81	-24.17	796.54	796.56
AC	2684+93.81	-24.17	796.44	796.48
AD	2685+03.81	-24.17	796.35	796.39
AE	2685+13.81	-24.17	796.25	796.29
AF	2685+23.81	-24.17	796.14	796.18
AG	2685+33.81	-24.17	796.03	796.06
CL. BRG. N. ABUT.	2685+39.56	-24.17	795.97	795.99
CL. N. EXP. JT.	2685+42.09	-24.17	795.94	795.96
BK. N. ABUT.	2685+46.29	-24.17	795.89	795.91

GIRDER 8

Location	Station	Offset	Theoretical Grade Elevations	Theoretical Grade Elevations Adjusted For Dead Load Deflection & Grinding
BK. S. ABUT.	2681+95.65	-18.50	797.38	797.40
CL. S. EXP. JT.	2681+99.68	-18.50	797.39	797.41
CL. BRG. S. ABUT.	2682+02.38	-18.50	797.40	797.42
A	2682+12.38	-18.50	797.41	797.45
B	2682+22.38	-18.50	797.43	797.48
C	2682+32.38	-18.50	797.44	797.50
D	2682+42.38	-18.50	797.45	797.50
E	2682+52.38	-18.50	797.45	797.49
F	2682+62.38	-18.50	797.45	797.48
G	2682+72.38	-18.50	797.45	797.46
H	2682+82.38	-18.50	797.44	797.45
I	2682+92.38	-18.50	797.43	797.44
CL. BRG. PIER 1	2682+98.13	-18.50	797.42	797.44
J	2683+08.13	-18.50	797.40	797.45
K	2683+18.13	-18.50	797.38	797.46
L	2683+28.13	-18.50	797.35	797.47
M	2683+38.13	-18.50	797.32	797.48
N	2683+48.13	-18.50	797.29	797.48
O	2683+58.13	-18.50	797.25	797.47
P	2683+68.13	-18.50	797.20	797.45
Q	2683+78.13	-18.50	797.16	797.40
R	2683+88.13	-18.50	797.11	797.34
S	2683+98.13	-18.50	797.05	797.27
T	2684+08.13	-18.50	796.99	797.18
U	2684+18.13	-18.50	796.93	797.08
V	2684+28.13	-18.50	796.86	796.97
W	2684+38.13	-18.50	796.79	796.86
X	2684+48.13	-18.50	796.72	796.76
CL. BRG. PIER 2	2684+53.13	-18.50	796.68	796.70
Y	2684+63.13	-18.50	796.60	796.61
Z	2684+73.13	-18.50	796.52	796.52
AA	2684+83.13	-18.50	796.43	796.44
AB	2684+93.13	-18.50	796.34	796.36
AC	2685+03.13	-18.50	796.24	796.28
AD	2685+13.13	-18.50	796.14	796.18
AE	2685+23.13	-18.50	796.03	796.08
AF	2685+33.13	-18.50	795.93	795.97
AG	2685+43.13	-18.50	795.81	795.84
CL. BRG. N. ABUT.	2685+48.88	-18.50	795.75	795.77
CL. N. EXP. JT.	2685+51.41	-18.50	795.72	795.74
BK. N. ABUT.	2685+55.61	-18.50	795.67	795.69

PROP. PGL (SB)

Location	Station	Offset	Theoretical Grade Elevations	Theoretical Grade Elevations Adjusted For Dead Load Deflection & Grinding
BK. S. ABUT.	2682+03.86	-13.50	797.30	797.32
CL. S. EXP. JT.	2682+07.89	-13.50	797.31	797.33
CL. BRG. S. ABUT.	2682+10.59	-13.50	797.31	797.33
A	2682+20.59	-13.50	797.33	797.37
B	2682+30.59	-13.50	797.34	797.39
C	2682+40.59	-13.50	797.35	797.41
D	2682+50.59	-13.50	797.35	797.41
E	2682+60.59	-13.50	797.35	797.39
F	2682+70.59	-13.50	797.35	797.38
G	2682+80.59	-13.50	797.34	797.35
H	2682+90.59	-13.50	797.33	797.34
I	2683+00.59	-13.50	797.31	797.33
CL. BRG. PIER 1	2683+06.34	-13.50	797.30	797.32
J	2683+16.34	-13.50	797.28	797.33
K	2683+26.34	-13.50	797.26	797.35
L	2683+36.34	-13.50	797.23	797.36
M	2683+46.34	-13.50	797.19	797.37
N	2683+56.34	-13.50	797.15	797.37
O	2683+66.34	-13.50	797.11	797.37
P	2683+76.34	-13.50	797.07	797.34
Q	2683+86.34	-13.50	797.02	797.29
R	2683+96.34	-13.50	796.96	797.23
S	2684+06.34	-13.50	796.90	797.14
T	2684+16.34	-13.50	796.84	797.05
U	2684+26.34	-13.50	796.78	796.94
V	2684+36.34	-13.50	796.71	796.82
W	2684+46.34	-13.50	796.63	796.70
X	2684+56.34	-13.50	796.56	796.59
CL. BRG. PIER 2	2684+61.34	-13.50	796.52	796.54
Y	2684+71.34	-13.50	796.43	796.44
Z	2684+81.34	-13.50	796.34	796.35
AA	2684+91.34	-13.50	796.25	796.27
AB	2685+01.34	-13.50	796.16	796.18
AC	2685+11.34	-13.50	796.06	796.10
AD	2685+21.34	-13.50	795.95	796.00
AE	2685+31.34	-13.50	795.85	795.90
AF	2685+41.34	-13.50	795.73	795.78
AG	2685+51.34	-13.50	795.62	795.65
CL. BRG. N. ABUT.	2685+57.09	-13.50	795.55	795.57
CL. N. EXP. JT.	2685+59.62	-13.50	795.52	795.54
BK. N. ABUT.	2685+63.82	-13.50	795.47	795.49

GIRDER 9

Location	Station	Offset	Theoretical Grade Elevations	Theoretical Grade Elevations Adjusted For Dead Load Deflection & Grinding
BK. S. ABUT.	2682+08.11	-10.91	797.26	797.28
CL. S. EXP. JT.	2682+12.14	-10.91	797.26	797.28
CL. BRG. S. ABUT.	2682+14.84	-10.91	797.27	797.29
A	2682+24.84	-10.91	797.28	797.32
B	2682+34.84	-10.91	797.29	797.35
C	2682+44.84	-10.91	797.30	797.36
D	2682+54.84	-10.91	797.30	797.35
E	2682+64.84	-10.91	797.30	797.34
F	2682+74.84	-10.91	797.29	797.32
G	2682+84.84	-10.91	797.29	797.30
H	2682+94.84	-10.91	797.27	797.28
I	2683+04.84	-10.91	797.25	797.27
CL. BRG. PIER 1	2683+10.59	-10.91	797.24	797.26
J	2683+20.59	-10.91	797.22	797.27
K	2683+30.59	-10.91	797.19	797.28
L	2683+40.59	-10.91	797.16	797.30
M	2683+50.59	-10.91	797.12	797.30
N	2683+60.59	-10.91	797.08	797.31
O	2683+70.59	-10.91	797.04	797.29
P	2683+80.59	-10.91	796.99	797.26
Q	2683+90.59	-10.91	796.94	797.22
R	2684+00.59	-10.91	796.89	797.15
S	2684+10.59	-10.91	796.83	797.07
T	2684+20.59	-10.91	796.76	796.97
U	2684+30.59	-10.91	796.70	796.86
V	2684+40.59	-10.91	796.62	796.74
W	2684+50.59	-10.91	796.55	796.62
X	2684+60.59	-10.91	796.47	796.51
CL. BRG. PIER 2	2684+65.59	-10.91	796.43	796.45
Y	2684+75.59	-10.91	796.34	796.35
Z	2684+85.59	-10.91	796.25	796.26
AA	2684+95.59	-10.91	796.16	796.17
AB	2685+05.59	-10.91	796.06	796.09
AC	2685+15.59	-10.91	795.96	796.00
AD	2685+25.59	-10.91	795.86	795.91
AE	2685+35.59	-10.91	795.75	795.80
AF	2685+45.59	-10.91	795.63	795.68
AG	2685+55.59	-10.91	795.52	795.55
CL. BRG. N. ABUT.	2685+61.34	-10.91	795.45	795.47
CL. N. EXP. JT.	2685+63.87	-10.91	795.42	795.44
BK. N. ABUT.	2685+68.07	-10.91	795.36	795.39

GIRDER 10

Location	Station	Offset	Theoretical Grade Elevations	Theoretical Grade Elevations Adjusted For Dead Load Deflection & Grinding
BK. S. ABUT.	2682+20.58	-3.33	797.12	797.15
CL. S. EXP. JT.	2682+24.61	-3.33	797.13	797.15
CL. BRG. S. ABUT.	2682+27.31	-3.33	797.13	797.15
A	2682+37.31	-3.33	797.14	797.18
B	2682+47.31	-3.33	797.15	797.20
C	2682+57.31	-3.33	797.15	797.21
D	2682+67.31	-3.33	797.15	797.20
E	2682+77.31	-3.33	797.14	797.18
F	2682+87.31	-3.33	797.13	797.16
G	2682+97.31	-3.33	797.12	797.13
H	2683+07.31	-3.33	797.10	797.10
I	2683+17.31	-3.33	797.08	797.09
CL. BRG. PIER 1	2683+23.06	-3.33	797.06	797.08
J	2683+33.06	-3.33	797.03	797.09
K	2683+43.06	-3.33	797.00	797.10
L	2683+53.06	-3.33	796.96	797.11
M	2683+63.06	-3.33	796.92	797.11
N	2683+73.06	-3.33	796.88	797.11
O	2683+83.06	-3.33	796.83	797.10
P	2683+93.06	-3.33	796.78	797.06
Q	2684+03.06	-3.33	796.72	797.01
R	2684+13.06	-3.33	796.66	796.94
S	2684+23.06	-3.33	796.60	796.85
T	2684+33.06	-3.33	796.53	796.74
U	2684+43.06	-3.33	796.45	796.62
V	2684+53.06	-3.33	796.38	796.50
W	2684+63.06	-3.33	796.30	796.37
X	2684+73.06	-3.33	796.21	796.25
CL. BRG. PIER 2	2684+78.06	-3.33	796.17	796.19
Y	2684+88.06	-3.33	796.08	796.08
Z	2684+98.06	-3.33	795.99	795.99
AA	2685+08.06	-3.33	795.89	795.90
AB	2685+18.06	-3.33	795.78	795.81
AC	2685+28.06	-3.33	795.68	795.72
AD	2685+38.06	-3.33	795.57	795.62
AE	2685+48.06	-3.33	795.45	795.51
AF	2685+58.06	-3.33	795.34	795.38
AG	2685+68.06	-3.33	795.21	795.24
CL. BRG. N. ABUT.	2685+73.81	-3.33	795.14	795.16
CL. N. EXP. JT.	2685+76.34	-3.33	795.11	795.13
BK. N. ABUT.	2685+80.54	-3.33	795.05	795.08

FACE OF SB E. PARAPET

Location	Station	Offset	Theoretical Grade Elevations	Theoretical Grade Elevations Adjusted For Dead Load Deflection & Grinding
BK. S. ABUT.	2682+23.58	-1.50	797.09	797.11
CL. S. EXP. JT.	2682+27.61	-1.50	797.10	797.12
CL. BRG. S. ABUT.	2682+30.31	-1.50	797.10	797.12
A	2682+40.31	-1.50	797.11	797.15
B	2682+50.31	-1.50	797.11	797.17
C	2682+60.31	-1.50	797.11	797.17
D	2682+70.31	-1.50	797.11	797.16
E	2682+80.31	-1.50	797.10	797.14
F	2682+90.31	-1.50	797.09	797.12
G	2683+00.31	-1.50	797.07	797.09
H	2683+10.31	-1.50	797.06	797.06
I	2683+20.31	-1.50	797.03	797.04
CL. BRG. PIER 1	2683+26.06	-1.50	797.02	797.04
J	2683+36.06	-1.50	796.99	797.04
K	2683+46.06	-1.50	796.95	797.05
L	2683+56.06	-1.50	796.91	797.06
M	2683+66.06	-1.50	796.87	797.07
N	2683+76.06	-1.50	796.83	797.06
O	2683+86.06	-1.50	796.78	797.05
P	2683+96.06	-1.50	796.72	797.01
Q	2684+06.06	-1.50	796.67	796.96
R	2684+16.06	-1.50	796.60	796.89
S	2684+26.06	-1.50	796.54	796.79
T	2684+36.06	-1.50	796.47	796.69
U	2684+46.06	-1.50	796.40	796.57
V	2684+56.06	-1.50	796.32	796.44
W	2684+66.06	-1.50	796.24	796.31
X	2684+76.06	-1.50	796.15	796.19
CL. BRG. PIER 2	2684+81.06	-1.50	796.11	796.13
Y	2684+91.06	-1.50	796.01	796.02
Z	2685+01.06	-1.50	795.92	795.92
AA	2685+11.06	-1.50	795.82	795.83
AB	2685+21.06	-1.50	795.72	795.74
AC	2685+31.06	-1.50	795.61	795.65
AD	2685+41.06	-1.50	795.50	795.55
AE	2685+51.06	-1.50	795.38	795.43
AF	2685+61.06	-1.50	795.26	795.31
AG	2685+71.06	-1.50	795.14	795.17
CL. BRG. N. ABUT.	2685+76.81	-1.50	795.07	795.09
CL. N. EXP. JT.	2685+79.34	-1.50	795.03	795.05
BK. N. ABUT.	2685+83.54	-1.50	794.98	795.00

FACE OF NB W. PARAPET

Location	Station	Offset	Theoretical Grade Elevations	Theoretical Grade Elevations Adjusted For Dead Load Deflection & Grinding
BK. S. ABUT.	2682+28.51	1.50	797.10	797.12
CL. S. EXP. JT.	2682+32.55	1.50	797.10	797.12
CL. BRG. S. ABUT.	2682+35.25	1.50	797.10	797.13
A	2682+45.25	1.50	797.11	797.15
B	2682+55.25	1.50	797.11	797.17
C	2682+65.25	1.50	797.11	797.17
D	2682+75.25	1.50	797.11	797.16
E	2682+85.25	1.50	797.10	797.14
F	2682+95.25	1.50	797.08	797.11
G	2683+05.25	1.50	797.07	797.08
H	2683+15.25	1.50	797.04	797.05
I	2683+25.25	1.50	797.02	797.03
CL. BRG. PIER 1	2683+31.00	1.50	797.00	797.02
J	2683+41.00	1.50	796.97	797.03
K	2683+51.00	1.50	796.93	797.03
L	2683+61.00	1.50	796.89	797.04
M	2683+71.00	1.50	796.85	797.04
N	2683+81.00	1.50	796.80	797.04
O	2683+91.00	1.50	796.75	797.02
P	2684+01.00	1.50	796.70	796.98
Q	2684+11.00	1.50	796.64	796.93
R	2684+21.00	1.50	796.57	796.85
S	2684+31.00	1.50	796.51	796.76
T	2684+41.00	1.50	796.43	796.65
U	2684+51.00	1.50	796.36	796.53
V	2684+61.00	1.50	796.28	796.40
W	2684+71.00	1.50	796.19	796.27
X	2684+81.00	1.50	796.11	796.15
CL. BRG. PIER 2	2684+86.00	1.50	796.06	796.08
Y	2684+96.00	1.50	795.97	795.97
Z	2685+06.00	1.50	795.87	795.87
AA	2685+16.00	1.50	795.77	795.78
AB	2685+26.00	1.50	795.66	795.69
AC	2685+36.00	1.50	795.55	795.60
AD	2685+46.00	1.50	795.44	795.49
AE	2685+56.00	1.50	795.32	795.38
AF	2685+66.00	1.50	795.20	795.25
AG	2685+76.00	1.50	795.08	795.11
CL. BRG. N. ABUT.	2685+81.75	1.50	795.00	795.02
CL. N. EXP. JT.	2685+84.27	1.50	794.97	794.99
BK. N. ABUT.	2685+88.48	1.50	794.91	794.94

GIRDER 11

Location	Station	Offset	Theoretical Grade Elevations	Theoretical Grade Elevations Adjusted For Dead Load Deflection & Grinding
BK. S. ABUT.	2682+31.52	3.33	797.14	797.16
CL. S. EXP. JT.	2682+35.56	3.33	797.14	797.16
CL. BRG. S. ABUT.	2682+38.26	3.33	797.14	797.16
A	2682+48.26	3.33	797.15	797.19
B	2682+58.26	3.33	797.15	797.20
C	2682+68.26	3.33	797.15	797.21
D	2682+78.26	3.33	797.14	797.20
E	2682+88.26	3.33	797.13	797.17
F	2682+98.26	3.33	797.11	797.14
G	2683+08.26	3.33	797.10	797.11
H	2683+18.26	3.33	797.07	797.08
I	2683+28.26	3.33	797.05	797.06
CL. BRG. PIER 1	2683+34.01	3.33	797.03	797.05
J	2683+44.01	3.33	797.00	797.05
K	2683+54.01	3.33	796.96	797.06
L	2683+64.01	3.33	796.92	797.06
M	2683+74.01	3.33	796.87	797.07
N	2683+84.01	3.33	796.82	797.06
O	2683+94.01	3.33	796.77	797.04
P	2684+04.01	3.33	796.72	797.00
Q	2684+14.01	3.33	796.65	796.95
R	2684+24.01	3.33	796.59	796.87
S	2684+34.01	3.33	796.52	796.77
T	2684+44.01	3.33	796.45	796.67
U	2684+54.01	3.33	796.37	796.54
V	2684+64.01	3.33	796.29	796.41
W	2684+74.01	3.33	796.21	796.28
X	2684+84.01	3.33	796.12	796.16
CL. BRG. PIER 2	2684+89.01	3.33	796.07	796.09
Y	2684+99.01	3.33	795.98	795.98
Z	2685+09.01	3.33	795.88	795.88
AA	2685+19.01	3.33	795.77	795.79
AB	2685+29.01	3.33	795.67	795.69
AC	2685+39.01	3.33	795.56	795.60
AD	2685+49.01	3.33	795.44	795.49
AE	2685+59.01	3.33	795.32	795.38
AF	2685+69.01	3.33	795.20	795.25
AG	2685+79.01	3.33	795.07	795.11
CL. BRG. N. ABUT.	2685+84.76	3.33	795.00	795.02
CL. N. EXP. JT.	2685+87.28	3.33	794.97	794.99
BK. N. ABUT.	2685+91.49	3.33	794.91	794.93

GIRDER 12

Location	Station	Offset	Theoretical Grade Elevations	Theoretical Grade Elevations Adjusted For Dead Load Deflection & Grinding
BK. S. ABUT.	2682+43.98	10.92	797.30	797.32
CL. S. EXP. JT.	2682+48.02	10.92	797.30	797.32
CL. BRG. S. ABUT.	2682+50.72	10.92	797.30	797.32
A	2682+60.72	10.92	797.30	797.34
B	2682+70.72	10.92	797.30	797.35
C	2682+80.72	10.92	797.29	797.35
D	2682+90.72	10.92	797.28	797.33
E	2683+00.72	10.92	797.26	797.30
F	2683+10.72	10.92	797.24	797.27
G	2683+20.72	10.92	797.22	797.23
H	2683+30.72	10.92	797.19	797.20
I	2683+40.72	10.92	797.16	797.17
CL. BRG. PIER 1	2683+46.47	10.92	797.14	797.16
J	2683+56.47	10.92	797.10	797.15
K	2683+66.47	10.92	797.06	797.15
L	2683+76.47	10.92	797.01	797.15
M	2683+86.47	10.92	796.96	797.14
N	2683+96.47	10.92	796.91	797.13
O	2684+06.47	10.92	796.85	797.11
P	2684+16.47	10.92	796.79	797.06
Q	2684+26.47	10.92	796.72	797.00
R	2684+36.47	10.92	796.65	796.92
S	2684+46.47	10.92	796.58	796.82
T	2684+56.47	10.92	796.50	796.71
U	2684+66.47	10.92	796.42	796.58
V	2684+76.47	10.92	796.34	796.45
W	2684+86.47	10.92	796.25	796.32
X	2684+96.47	10.92	796.15	796.19
CL. BRG. PIER 2	2685+01.47	10.92	796.10	796.12
Y	2685+11.47	10.92	796.00	796.01
Z	2685+21.47	10.92	795.90	795.90
AA	2685+31.47	10.92	795.79	795.81
AB	2685+41.47	10.92	795.68	795.71
AC	2685+51.47	10.92	795.57	795.61
AD	2685+61.47	10.92	795.45	795.49
AE	2685+71.47	10.92	795.32	795.37
AF	2685+81.47	10.92	795.19	795.24
AG	2685+91.47	10.92	795.06	795.09
CL. BRG. N. ABUT.	2685+97.22	10.92	794.99	795.01
CL. N. EXP. JT.	2685+99.74	10.92	794.95	794.97
BK. N. ABUT.	2686+03.95	10.92	794.89	794.91

PROP. PBL (NB)

Location	Station	Offset	Theoretical Grade Elevations	Theoretical Grade Elevations Adjusted For Dead Load Deflection & Grinding
BK. S. ABUT.	2682+48.23	13.50	797.35	797.37
CL. S. EXP. JT.	2682+52.27	13.50	797.35	797.37
CL. BRG. S. ABUT.	2682+54.97	13.50	797.35	797.37
A	2682+64.97	13.50	797.35	797.39
B	2682+74.97	13.50	797.35	797.40
C	2682+84.97	13.50	797.34	797.39
D	2682+94.97	13.50	797.32	797.38
E	2683+04.97	13.50	797.31	797.35
F	2683+14.97	13.50	797.28	797.31
G	2683+24.97	13.50	797.26	797.27
H	2683+34.97	13.50	797.23	797.24
I	2683+44.97	13.50	797.20	797.21
CL. BRG. PIER 1	2683+50.72	13.50	797.18	797.20
J	2683+60.72	13.50	797.14	797.19
K	2683+70.72	13.50	797.09	797.18
L	2683+80.72	13.50	797.04	797.18
M	2683+90.72	13.50	796.99	797.17
N	2684+00.72	13.50	796.94	797.16
O	2684+10.72	13.50	796.88	797.13
P	2684+20.72	13.50	796.81	797.08
Q	2684+30.72	13.50	796.75	797.02
R	2684+40.72	13.50	796.68	796.94
S	2684+50.72	13.50	796.60	796.84
T	2684+60.72	13.50	796.52	796.73
U	2684+70.72	13.50	796.44	796.60
V	2684+80.72	13.50	796.35	796.46
W	2684+90.72	13.50	796.26	796.33
X	2685+00.72	13.50	796.16	796.20
CL. BRG. PIER 2	2685+05.72	13.50	796.11	796.13
Y	2685+15.72	13.50	796.01	796.02
Z	2685+25.72	13.50	795.91	795.91
AA	2685+35.72	13.50	795.80	795.81
AB	2685+45.72	13.50	795.68	795.71
AC	2685+55.72	13.50	795.57	795.61
AD	2685+65.72	13.50	795.45	795.49
AE	2685+75.72	13.50	795.32	795.37
AF	2685+85.72	13.50	795.19	795.23
AG	2685+95.72	13.50	795.06	795.09
CL. BRG. N. ABUT.	2686+01.47	13.50	794.98	795.00
CL. N. EXP. JT.	2686+03.99	13.50	794.94	794.96
BK. N. ABUT.	2686+08.20	13.50	794.89	794.91

GIRDER 13

Location	Station	Offset	Theoretical Grade Elevations	Theoretical Grade Elevations Adjusted For Dead Load Deflection & Grinding
BK. S. ABUT.	2682+56.45	18.50	797.45	797.47
CL. S. EXP. JT.	2682+60.49	18.50	797.45	797.47
CL. BRG. S. ABUT.	2682+63.19	18.50	797.45	797.47
A	2682+73.19	18.50	797.45	797.49
B	2682+83.19	18.50	797.44	797.49
C	2682+93.19	18.50	797.43	797.48
D	2683+03.19	18.50	797.41	797.46
E	2683+13.19	18.50	797.39	797.43
F	2683+23.19	18.50	797.36	797.39
G	2683+33.19	18.50	797.34	797.35
H	2683+43.19	18.50	797.30	797.31
I	2683+53.19	18.50	797.27	797.28
CL. BRG. PIER 1	2683+58.94	18.50	797.24	797.26
J	2683+68.94	18.50	797.20	797.25
K	2683+78.94	18.50	797.15	797.24
L	2683+88.94	18.50	797.10	797.23
M	2683+98.94	18.50	797.05	797.21
N	2684+08.94	18.50	796.99	797.19
O	2684+18.94	18.50	796.93	797.15
P	2684+28.94	18.50	796.86	797.10
Q	2684+38.94	18.50	796.79	797.04
R	2684+48.94	18.50	796.71	796.95
S	2684+58.94	18.50	796.63	796.85
T	2684+68.94	18.50	796.55	796.74
U	2684+78.94	18.50	796.47	796.61
V	2684+88.94	18.50	796.37	796.48
W	2684+98.94	18.50	796.28	796.35
X	2685+08.94	18.50	796.18	796.22
CL. BRG. PIER 2	2685+13.94	18.50	796.13	796.15
Y	2685+23.94	18.50	796.03	796.03
Z	2685+33.94	18.50	795.92	795.92
AA	2685+43.94	18.50	795.80	795.82
AB	2685+53.94	18.50	795.69	795.71
AC	2685+63.94	18.50	795.57	795.61
AD	2685+73.94	18.50	795.44	795.49
AE	2685+83.94	18.50	795.31	795.36
AF	2685+93.94	18.50	795.18	795.22
AG	2686+03.94	18.50	795.04	795.07
CL. BRG. N. ABUT.	2686+09.69	18.50	794.96	794.99
CL. N. EXP. JT.	2686+12.21	18.50	794.93	794.95
BK. N. ABUT.	2686+16.42	18.50	794.87	794.89

NB W. SLOPE CHANGE

Location	Station	Offset	Theoretical Grade Elevations	Theoretical Grade Elevations Adjusted For Dead Load Deflection & Grinding
BK. S. ABUT.	2682+67.95	25.50	797.59	797.61
CL. S. EXP. JT.	2682+71.99	25.50	797.59	797.61
CL. BRG. S. ABUT.	2682+74.69	25.50	797.59	797.61
A	2682+84.69	25.50	797.58	797.61
B	2682+94.69	25.50	797.56	797.61
C	2683+04.69	25.50	797.55	797.60
D	2683+14.69	25.50	797.53	797.57
E	2683+24.69	25.50	797.50	797.54
F	2683+34.69	25.50	797.47	797.50
G	2683+44.69	25.50	797.44	797.45
H	2683+54.69	25.50	797.40	797.41
I	2683+64.69	25.50	797.36	797.37
CL. BRG. PIER 1	2683+70.44	25.50	797.33	797.35
J	2683+80.44	25.50	797.29	797.33
K	2683+90.44	25.50	797.23	797.31
L	2684+00.44	25.50	797.18	797.29
M	2684+10.44	25.50	797.12	797.26
N	2684+20.44	25.50	797.06	797.23
O	2684+30.44	25.50	796.99	797.19
P	2684+40.44	25.50	796.92	797.13
Q	2684+50.44	25.50	796.84	797.06
R	2684+60.44	25.50	796.76	796.97
S	2684+70.44	25.50	796.68	796.87
T	2684+80.44	25.50	796.59	796.76
U	2684+90.44	25.50	796.50	796.63
V	2685+00.44	25.50	796.41	796.50
W	2685+10.44	25.50	796.31	796.37
X	2685+20.44	25.50	796.20	796.24
CL. BRG. PIER 2	2685+25.44	25.50	796.15	796.17
Y	2685+35.44	25.50	796.04	796.05
Z	2685+45.44	25.50	795.93	795.93
AA	2685+55.44	25.50	795.81	795.82
AB	2685+65.44	25.50	795.69	795.71
AC	2685+75.44	25.50	795.56	795.60
AD	2685+85.44	25.50	795.43	795.48
AE	2685+95.44	25.50	795.30	795.35
AF	2686+05.44	25.50	795.16	795.20
AG	2686+15.44	25.50	795.02	795.05
CL. BRG. N. ABUT.	2686+21.19	25.50	794.94	794.96
CL. N. EXP. JT.	2686+23.71	25.50	794.90	794.92
BK. N. ABUT.	2686+27.92	25.50	794.84	794.86

GIRDER 14

Location	Station	Offset	Theoretical Grade Elevations	Theoretical Grade Elevations Adjusted For Dead Load Deflection & Grinding
BK. S. ABUT.	2682+68.91	26.08	797.60	797.62
CL. S. EXP. JT.	2682+72.95	26.08	797.60	797.62
CL. BRG. S. ABUT.	2682+75.65	26.08	797.59	797.62
A	2682+85.65	26.08	797.58	797.62
B	2682+95.65	26.08	797.57	797.62
C	2683+05.65	26.08	797.55	797.60
D	2683+15.65	26.08	797.53	797.58
E	2683+25.65	26.08	797.51	797.54
F	2683+35.65	26.08	797.48	797.50
G	2683+45.65	26.08	797.44	797.46
H	2683+55.65	26.08	797.41	797.42
I	2683+65.65	26.08	797.36	797.38
CL. BRG. PIER 1	2683+71.40	26.08	797.34	797.36
J	2683+81.40	26.08	797.29	797.34
K	2683+91.40	26.08	797.24	797.31
L	2684+01.40	26.08	797.18	797.29
M	2684+11.40	26.08	797.12	797.27
N	2684+21.40	26.08	797.06	797.24
O	2684+31.40	26.08	796.99	797.19
P	2684+41.40	26.08	796.92	797.13
Q	2684+51.40	26.08	796.84	797.06
R	2684+61.40	26.08	796.76	796.97
S	2684+71.40	26.08	796.68	796.87
T	2684+81.40	26.08	796.59	796.76
U	2684+91.40	26.08	796.50	796.63
V	2685+01.40	26.08	796.40	796.50
W	2685+11.40	26.08	796.31	796.36
X	2685+21.40	26.08	796.20	796.24
CL. BRG. PIER 2	2685+26.40	26.08	796.15	796.17
Y	2685+36.40	26.08	796.04	796.05
Z	2685+46.40	26.08	795.92	795.93
AA	2685+56.40	26.08	795.81	795.82
AB	2685+66.40	26.08	795.69	795.71
AC	2685+76.40	26.08	795.56	795.60
AD	2685+86.40	26.08	795.43	795.47
AE	2685+96.40	26.08	795.30	795.34
AF	2686+06.40	26.08	795.16	795.20
AG	2686+16.40	26.08	795.02	795.05
CL. BRG. N. ABUT.	2686+22.15	26.08	794.93	794.96
CL. N. EXP. JT.	2686+24.67	26.08	794.90	794.92
BK. N. ABUT.	2686+28.88	26.08	794.84	794.86

GIRDER 15

Location	Station	Offset	Theoretical Grade Elevations	Theoretical Grade Elevations Adjusted For Dead Load Deflection & Grinding
BK. S. ABUT.	2682+81.38	33.67	797.70	797.72
CL. S. EXP. JT.	2682+85.42	33.67	797.70	797.72
CL. BRG. S. ABUT.	2682+88.12	33.67	797.70	797.72
A	2682+98.12	33.67	797.68	797.72
B	2683+08.12	33.67	797.66	797.71
C	2683+18.12	33.67	797.64	797.69
D	2683+28.12	33.67	797.61	797.66
E	2683+38.12	33.67	797.58	797.62
F	2683+48.12	33.67	797.55	797.57
G	2683+58.12	33.67	797.51	797.52
H	2683+68.12	33.67	797.47	797.48
I	2683+78.12	33.67	797.42	797.43
CL. BRG. PIER 1	2683+83.87	33.67	797.39	797.41
J	2683+93.87	33.67	797.34	797.38
K	2684+03.87	33.67	797.28	797.36
L	2684+13.87	33.67	797.22	797.33
M	2684+23.87	33.67	797.16	797.30
N	2684+33.87	33.67	797.09	797.26
O	2684+43.87	33.67	797.01	797.22
P	2684+53.87	33.67	796.94	797.15
Q	2684+63.87	33.67	796.86	797.08
R	2684+73.87	33.67	796.77	796.98
S	2684+83.87	33.67	796.68	796.87
T	2684+93.87	33.67	796.59	796.76
U	2685+03.87	33.67	796.49	796.62
V	2685+13.87	33.67	796.39	796.49
W	2685+23.87	33.67	796.29	796.35
X	2685+33.87	33.67	796.18	796.21
CL. BRG. PIER 2	2685+38.87	33.67	796.12	796.15
Y	2685+48.87	33.67	796.01	796.02
Z	2685+58.87	33.67	795.89	795.90
AA	2685+68.87	33.67	795.77	795.78
AB	2685+78.87	33.67	795.64	795.67
AC	2685+88.87	33.67	795.51	795.55
AD	2685+98.87	33.67	795.38	795.42
AE	2686+08.87	33.67	795.24	795.28
AF	2686+18.87	33.67	795.10	795.14
AG	2686+28.87	33.67	794.95	794.98
CL. BRG. N. ABUT.	2686+34.62	33.67	794.86	794.88
CL. N. EXP. JT.	2686+37.14	33.67	794.83	794.85
BK. N. ABUT.	2686+41.35	33.67	794.76	794.78

NB STAGE CONSTRUCTION LINE & CROWN

Location	Station	Offset	Theoretical Grade Elevations	Theoretical Grade Elevations Adjusted For Dead Load Deflection & Grinding
BK. S. ABUT.	2682+87.68	37.50	797.75	797.77
CL. S. EXP. JT.	2682+91.72	37.50	797.75	797.77
CL. BRG. S. ABUT.	2682+94.42	37.50	797.74	797.77
A	2683+04.42	37.50	797.73	797.76
B	2683+14.42	37.50	797.71	797.75
C	2683+24.42	37.50	797.68	797.73
D	2683+34.42	37.50	797.65	797.70
E	2683+44.42	37.50	797.62	797.66
F	2683+54.42	37.50	797.58	797.61
G	2683+64.42	37.50	797.54	797.56
H	2683+74.42	37.50	797.50	797.51
I	2683+84.42	37.50	797.45	797.46
CL. BRG. PIER 1	2683+90.17	37.50	797.42	797.44
J	2684+00.17	37.50	797.36	797.41
K	2684+10.17	37.50	797.30	797.38
L	2684+20.17	37.50	797.24	797.35
M	2684+30.17	37.50	797.17	797.32
N	2684+40.17	37.50	797.10	797.28
O	2684+50.17	37.50	797.02	797.23
P	2684+60.17	37.50	796.94	797.16
Q	2684+70.17	37.50	796.86	797.08
R	2684+80.17	37.50	796.77	796.99
S	2684+90.17	37.50	796.68	796.87
T	2685+00.17	37.50	796.59	796.75
U	2685+10.17	37.50	796.49	796.62
V	2685+20.17	37.50	796.39	796.48
W	2685+30.17	37.50	796.28	796.34
X	2685+40.17	37.50	796.17	796.20
CL. BRG. PIER 2	2685+45.17	37.50	796.11	796.13
Y	2685+55.17	37.50	795.99	796.00
Z	2685+65.17	37.50	795.87	795.88
AA	2685+75.17	37.50	795.75	795.76
AB	2685+85.17	37.50	795.62	795.64
AC	2685+95.17	37.50	795.48	795.52
AD	2686+05.17	37.50	795.35	795.39
AE	2686+15.17	37.50	795.21	795.25
AF	2686+25.17	37.50	795.06	795.10
AG	2686+35.17	37.50	794.91	794.94
CL. BRG. N. ABUT.	2686+40.92	37.50	794.83	794.85
CL. N. EXP. JT.	2686+43.44	37.50	794.79	794.81
BK. N. ABUT.	2686+47.65	37.50	794.72	794.74

GIRDER 16

Location	Station	Offset	Theoretical Grade Elevations	Theoretical Grade Elevations Adjusted For Dead Load Deflection & Grinding
BK. S. ABUT.	2682+93.84	41.25	797.69	797.71
CL. S. EXP. JT.	2682+97.88	41.25	797.68	797.70
CL. BRG. S. ABUT.	2683+00.58	41.25	797.68	797.70
A	2683+10.58	41.25	797.66	797.69
B	2683+20.58	41.25	797.63	797.68
C	2683+30.58	41.25	797.61	797.66
D	2683+40.58	41.25	797.58	797.62
E	2683+50.58	41.25	797.54	797.58
F	2683+60.58	41.25	797.50	797.53
G	2683+70.58	41.25	797.46	797.47
H	2683+80.58	41.25	797.41	797.42
I	2683+90.58	41.25	797.36	797.37
CL. BRG. PIER 1	2683+96.33	41.25	797.33	797.35
J	2684+06.33	41.25	797.27	797.31
K	2684+16.33	41.25	797.21	797.28
L	2684+26.33	41.25	797.14	797.25
M	2684+36.33	41.25	797.07	797.22
N	2684+46.33	41.25	797.00	797.17
O	2684+56.33	41.25	796.92	797.12
P	2684+66.33	41.25	796.84	797.05
Q	2684+76.33	41.25	796.75	796.97
R	2684+86.33	41.25	796.66	796.87
S	2684+96.33	41.25	796.57	796.76
T	2685+06.33	41.25	796.47	796.64
U	2685+16.33	41.25	796.37	796.50
V	2685+26.33	41.25	796.26	796.36
W	2685+36.33	41.25	796.15	796.21
X	2685+46.33	41.25	796.04	796.07
CL. BRG. PIER 2	2685+51.33	41.25	795.98	796.00
Y	2685+61.33	41.25	795.86	795.87
Z	2685+71.33	41.25	795.74	795.75
AA	2685+81.33	41.25	795.61	795.63
AB	2685+91.33	41.25	795.48	795.50
AC	2686+01.33	41.25	795.34	795.38
AD	2686+11.33	41.25	795.21	795.25
AE	2686+21.33	41.25	795.06	795.11
AF	2686+31.33	41.25	794.91	794.95
AG	2686+41.33	41.25	794.76	794.79
CL. BRG. N. ABUT.	2686+47.08	41.25	794.67	794.69
CL. N. EXP. JT.	2686+49.60	41.25	794.63	794.66
BK. N. ABUT.	2686+53.81	41.25	794.57	794.59

GIRDER 17

Location	Station	Offset	Theoretical Grade Elevations	Theoretical Grade Elevations Adjusted For Dead Load Deflection & Grinding
BK. S. ABUT.	2683+06.30	48.83	797.55	797.57
CL. S. EXP. JT.	2683+10.34	48.83	797.55	797.57
CL. BRG. S. ABUT.	2683+13.04	48.83	797.54	797.56
A	2683+23.04	48.83	797.51	797.55
B	2683+33.04	48.83	797.49	797.53
C	2683+43.04	48.83	797.45	797.50
D	2683+53.04	48.83	797.42	797.46
E	2683+63.04	48.83	797.38	797.41
F	2683+73.04	48.83	797.33	797.36
G	2683+83.04	48.83	797.28	797.30
H	2683+93.04	48.83	797.23	797.24
I	2684+03.04	48.83	797.17	797.19
CL. BRG. PIER 1	2684+08.79	48.83	797.14	797.16
J	2684+18.79	48.83	797.08	797.12
K	2684+28.79	48.83	797.01	797.09
L	2684+38.79	48.83	796.94	797.05
M	2684+48.79	48.83	796.86	797.01
N	2684+58.79	48.83	796.79	796.96
O	2684+68.79	48.83	796.70	796.91
P	2684+78.79	48.83	796.62	796.83
Q	2684+88.79	48.83	796.53	796.75
R	2684+98.79	48.83	796.43	796.64
S	2685+08.79	48.83	796.33	796.52
T	2685+18.79	48.83	796.23	796.39
U	2685+28.79	48.83	796.12	796.25
V	2685+38.79	48.83	796.01	796.11
W	2685+48.79	48.83	795.90	795.96
X	2685+58.79	48.83	795.78	795.81
CL. BRG. PIER 2	2685+63.79	48.83	795.72	795.74
Y	2685+73.79	48.83	795.59	795.60
Z	2685+83.79	48.83	795.47	795.47
AA	2685+93.79	48.83	795.33	795.35
AB	2686+03.79	48.83	795.20	795.22
AC	2686+13.79	48.83	795.06	795.09
AD	2686+23.79	48.83	794.91	794.96
AE	2686+33.79	48.83	794.76	794.81
AF	2686+43.79	48.83	794.61	794.65
AG	2686+53.79	48.83	794.45	794.48
CL. BRG. N. ABUT.	2686+59.54	48.83	794.36	794.38
CL. N. EXP. JT.	2686+62.06	48.83	794.32	794.34
BK. N. ABUT.	2686+66.27	48.83	794.25	794.27

NB E. SLOPE CHANGE

Location	Station	Offset	Theoretical Grade Elevations	Theoretical Grade Elevations Adjusted For Dead Load Deflection & Grinding
BK. S. ABUT.	2683+07.40	49.50	797.54	797.56
CL. S. EXP. JT.	2683+11.44	49.50	797.53	797.55
CL. BRG. S. ABUT.	2683+14.14	49.50	797.53	797.55
A	2683+24.14	49.50	797.50	797.54
B	2683+34.14	49.50	797.47	797.52
C	2683+44.14	49.50	797.44	797.49
D	2683+54.14	49.50	797.40	797.45
E	2683+64.14	49.50	797.36	797.40
F	2683+74.14	49.50	797.32	797.34
G	2683+84.14	49.50	797.27	797.28
H	2683+94.14	49.50	797.21	797.22
I	2684+04.14	49.50	797.16	797.17
CL. BRG. PIER 1	2684+09.89	49.50	797.12	797.14
J	2684+19.89	49.50	797.06	797.11
K	2684+29.89	49.50	796.99	797.07
L	2684+39.89	49.50	796.92	797.03
M	2684+49.89	49.50	796.85	796.99
N	2684+59.89	49.50	796.77	796.94
O	2684+69.89	49.50	796.68	796.89
P	2684+79.89	49.50	796.60	796.81
Q	2684+89.89	49.50	796.51	796.73
R	2684+99.89	49.50	796.41	796.62
S	2685+09.89	49.50	796.31	796.50
T	2685+19.89	49.50	796.21	796.37
U	2685+29.89	49.50	796.10	796.23
V	2685+39.89	49.50	795.99	796.08
W	2685+49.89	49.50	795.88	795.94
X	2685+59.89	49.50	795.76	795.79
CL. BRG. PIER 2	2685+64.89	49.50	795.70	795.72
Y	2685+74.89	49.50	795.57	795.58
Z	2685+84.89	49.50	795.44	795.45
AA	2685+94.89	49.50	795.31	795.32
AB	2686+04.89	49.50	795.17	795.20
AC	2686+14.89	49.50	795.03	795.07
AD	2686+24.89	49.50	794.89	794.93
AE	2686+34.89	49.50	794.74	794.78
AF	2686+44.89	49.50	794.58	794.62
AG	2686+54.89	49.50	794.43	794.46
CL. BRG. N. ABUT.	2686+60.64	49.50	794.34	794.36
CL. N. EXP. JT.	2686+63.16	49.50	794.29	794.32
BK. N. ABUT.	2686+67.37	49.50	794.23	794.25

GIRDER 18

Location	Station	Offset	Theoretical Grade Elevations	Theoretical Grade Elevations Adjusted For Dead Load Deflection & Grinding
BK. S. ABUT.	2683+18.77	56.42	797.38	797.40
CL. S. EXP. JT.	2683+22.81	56.42	797.37	797.39
CL. BRG. S. ABUT.	2683+25.51	56.42	797.36	797.38
A	2683+35.51	56.42	797.33	797.37
B	2683+45.51	56.42	797.30	797.35
C	2683+55.51	56.42	797.26	797.31
D	2683+65.51	56.42	797.22	797.27
E	2683+75.51	56.42	797.17	797.21
F	2683+85.51	56.42	797.12	797.15
G	2683+95.51	56.42	797.07	797.08
H	2684+05.51	56.42	797.01	797.02
I	2684+15.51	56.42	796.95	796.96
CL. BRG. PIER 1	2684+21.26	56.42	796.91	796.93
J	2684+31.26	56.42	796.84	796.89
K	2684+41.26	56.42	796.77	796.86
L	2684+51.26	56.42	796.70	796.82
M	2684+61.26	56.42	796.62	796.78
N	2684+71.26	56.42	796.53	796.73
O	2684+81.26	56.42	796.45	796.67
P	2684+91.26	56.42	796.35	796.60
Q	2685+01.26	56.42	796.26	796.51
R	2685+11.26	56.42	796.16	796.40
S	2685+21.26	56.42	796.06	796.27
T	2685+31.26	56.42	795.95	796.13
U	2685+41.26	56.42	795.84	795.98
V	2685+51.26	56.42	795.72	795.83
W	2685+61.26	56.42	795.60	795.67
X	2685+71.26	56.42	795.48	795.51
CL. BRG. PIER 2	2685+76.26	56.42	795.41	795.44
Y	2685+86.26	56.42	795.29	795.29
Z	2685+96.26	56.42	795.15	795.16
AA	2686+06.26	56.42	795.01	795.03
AB	2686+16.26	56.42	794.87	794.90
AC	2686+26.26	56.42	794.73	794.77
AD	2686+36.26	56.42	794.58	794.62
AE	2686+46.26	56.42	794.42	794.47
AF	2686+56.26	56.42	794.27	794.31
AG	2686+66.26	56.42	794.11	794.13
CL. BRG. N. ABUT.	2686+72.01	56.42	794.01	794.03
CL. N. EXP. JT.	2686+74.53	56.42	793.97	793.99
BK. N. ABUT.	2686+78.74	56.42	793.90	793.92

GIRDER 19

Location	Station	Offset	Theoretical Grade Elevations	Theoretical Grade Elevations Adjusted For Dead Load Deflection & Grinding
BK. S. ABUT.	2683+31.23	64.00	797.19	797.21
CL. S. EXP. JT.	2683+35.27	64.00	797.18	797.20
CL. BRG. S. ABUT.	2683+37.97	64.00	797.17	797.19
A	2683+47.97	64.00	797.14	797.18
B	2683+57.97	64.00	797.10	797.15
C	2683+67.97	64.00	797.05	797.11
D	2683+77.97	64.00	797.01	797.06
E	2683+87.97	64.00	796.96	797.00
F	2683+97.97	64.00	796.90	796.93
G	2684+07.97	64.00	796.84	796.86
H	2684+17.97	64.00	796.78	796.79
I	2684+27.97	64.00	796.72	796.73
CL. BRG. PIER 1	2684+33.72	64.00	796.68	796.70
J	2684+43.72	64.00	796.60	796.66
K	2684+53.72	64.00	796.53	796.62
L	2684+63.72	64.00	796.45	796.58
M	2684+73.72	64.00	796.36	796.54
N	2684+83.72	64.00	796.27	796.49
O	2684+93.72	64.00	796.18	796.43
P	2685+03.72	64.00	796.08	796.35
Q	2685+13.72	64.00	795.98	796.26
R	2685+23.72	64.00	795.88	796.14
S	2685+33.72	64.00	795.77	796.01
T	2685+43.72	64.00	795.66	795.86
U	2685+53.72	64.00	795.54	795.70
V	2685+63.72	64.00	795.42	795.53
W	2685+73.72	64.00	795.30	795.37
X	2685+83.72	64.00	795.17	795.20
CL. BRG. PIER 2	2685+88.72	64.00	795.10	795.12
Y	2685+98.72	64.00	794.97	794.97
Z	2686+08.72	64.00	794.83	794.83
AA	2686+18.72	64.00	794.69	794.70
AB	2686+28.72	64.00	794.54	794.57
AC	2686+38.72	64.00	794.39	794.43
AD	2686+48.72	64.00	794.23	794.28
AE	2686+58.72	64.00	794.08	794.13
AF	2686+68.72	64.00	793.91	793.96
AG	2686+78.72	64.00	793.75	793.78
CL. BRG. N. ABUT.	2686+84.47	64.00	793.65	793.67
CL. N. EXP. JT.	2686+86.99	64.00	793.61	793.63
BK. N. ABUT.	2686+91.20	64.00	793.53	793.55

GIRDER 20

Location	Station	Offset	Theoretical Grade Elevations	Theoretical Grade Elevations Adjusted For Dead Load Deflection & Grinding
BK. S. ABUT.	2683+43.70	71.58	797.00	797.02
CL. S. EXP. JT.	2683+47.74	71.58	796.99	797.01
CL. BRG. S. ABUT.	2683+50.44	71.58	796.98	797.00
A	2683+60.44	71.58	796.94	796.98
B	2683+70.44	71.58	796.89	796.95
C	2683+80.44	71.58	796.84	796.90
D	2683+90.44	71.58	796.79	796.85
E	2684+00.44	71.58	796.74	796.78
F	2684+10.44	71.58	796.68	796.70
G	2684+20.44	71.58	796.61	796.63
H	2684+30.44	71.58	796.55	796.55
I	2684+40.44	71.58	796.48	796.49
CL. BRG. PIER 1	2684+46.19	71.58	796.43	796.45
J	2684+56.19	71.58	796.36	796.41
K	2684+66.19	71.58	796.27	796.37
L	2684+76.19	71.58	796.19	796.33
M	2684+86.19	71.58	796.10	796.29
N	2684+96.19	71.58	796.00	796.24
O	2685+06.19	71.58	795.91	796.18
P	2685+16.19	71.58	795.81	796.09
Q	2685+26.19	71.58	795.70	795.99
R	2685+36.19	71.58	795.59	795.87
S	2685+46.19	71.58	795.48	795.73
T	2685+56.19	71.58	795.36	795.58
U	2685+66.19	71.58	795.24	795.41
V	2685+76.19	71.58	795.11	795.23
W	2685+86.19	71.58	794.98	795.06
X	2685+96.19	71.58	794.85	794.89
CL. BRG. PIER 2	2686+01.19	71.58	794.78	794.80
Y	2686+11.19	71.58	794.64	794.65
Z	2686+21.19	71.58	794.50	794.50
AA	2686+31.19	71.58	794.35	794.36
AB	2686+41.19	71.58	794.20	794.23
AC	2686+51.19	71.58	794.04	794.09
AD	2686+61.19	71.58	793.88	793.94
AE	2686+71.19	71.58	793.72	793.77
AF	2686+81.19	71.58	793.55	793.60
AG	2686+91.19	71.58	793.38	793.41
CL. BRG. N. ABUT.	2686+96.94	71.58	793.28	793.30
CL. N. EXP. JT.	2686+99.46	71.58	793.24	793.26
BK. N. ABUT.	2687+03.67	71.58	793.16	793.18

FACE OF NB E. PARAPET

Location	Station	Offset	Theoretical Grade Elevations	Theoretical Grade Elevations Adjusted For Dead Load Deflection & Grinding
BK. S. ABUT.	2683+46.85	73.50	796.95	796.97
CL. S. EXP. JT.	2683+50.89	73.50	796.93	796.96
CL. BRG. S. ABUT.	2683+53.59	73.50	796.92	796.95
A	2683+63.59	73.50	796.88	796.92
B	2683+73.59	73.50	796.84	796.89
C	2683+83.59	73.50	796.79	796.85
D	2683+93.59	73.50	796.74	796.79
E	2684+03.59	73.50	796.68	796.72
F	2684+13.59	73.50	796.62	796.65
G	2684+23.59	73.50	796.56	796.57
H	2684+33.59	73.50	796.49	796.49
I	2684+43.59	73.50	796.41	796.43
CL. BRG. PIER 1	2684+49.34	73.50	796.37	796.39
J	2684+59.34	73.50	796.29	796.35
K	2684+69.34	73.50	796.21	796.30
L	2684+79.34	73.50	796.12	796.27
M	2684+89.34	73.50	796.03	796.22
N	2684+99.34	73.50	795.94	796.17
O	2685+09.34	73.50	795.84	796.11
P	2685+19.34	73.50	795.73	796.02
Q	2685+29.34	73.50	795.63	795.92
R	2685+39.34	73.50	795.52	795.80
S	2685+49.34	73.50	795.40	795.66
T	2685+59.34	73.50	795.28	795.50
U	2685+69.34	73.50	795.16	795.33
V	2685+79.34	73.50	795.03	795.16
W	2685+89.34	73.50	794.90	794.98
X	2685+99.34	73.50	794.77	794.81
CL. BRG. PIER 2	2686+04.34	73.50	794.70	794.72
Y	2686+14.34	73.50	794.56	794.56
Z	2686+24.34	73.50	794.41	794.42
AA	2686+34.34	73.50	794.27	794.28
AB	2686+44.34	73.50	794.11	794.14
AC	2686+54.34	73.50	793.96	794.00
AD	2686+64.34	73.50	793.80	793.85
AE	2686+74.34	73.50	793.63	793.68
AF	2686+84.34	73.50	793.46	793.51
AG	2686+94.34	73.50	793.29	793.32
CL. BRG. N. ABUT.	2687+00.09	73.50	793.19	793.21
CL. N. EXP. JT.	2687+02.61	73.50	793.14	793.16
BK. N. ABUT.	2687+06.82	73.50	793.07	793.09

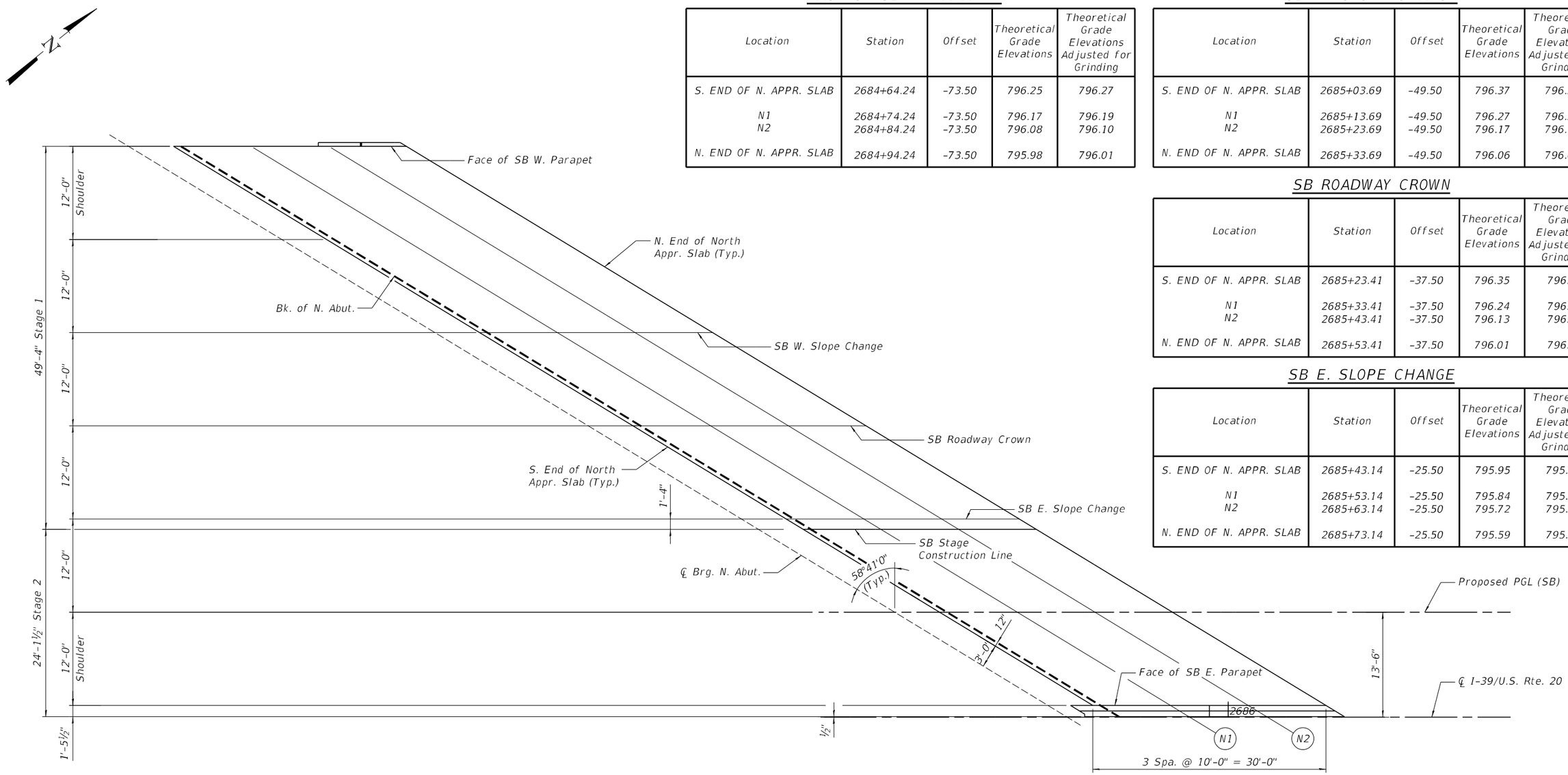

FACE OF SB W. PARAPET

Location	Station	Offset	Theoretical Grade Elevations	Theoretical Grade Elevations Adjusted for Grinding
S. END OF N. APPR. SLAB	2684+64.24	-73.50	796.25	796.27
N1	2684+74.24	-73.50	796.17	796.19
N2	2684+84.24	-73.50	796.08	796.10
N. END OF N. APPR. SLAB	2684+94.24	-73.50	795.98	796.01

SB. W. SLOPE CHANGE

Location	Station	Offset	Theoretical Grade Elevations	Theoretical Grade Elevations Adjusted for Grinding
S. END OF N. APPR. SLAB	2685+03.69	-49.50	796.37	796.39
N1	2685+13.69	-49.50	796.27	796.29
N2	2685+23.69	-49.50	796.17	796.19
N. END OF N. APPR. SLAB	2685+33.69	-49.50	796.06	796.08

SB ROADWAY CROWN

Location	Station	Offset	Theoretical Grade Elevations	Theoretical Grade Elevations Adjusted for Grinding
S. END OF N. APPR. SLAB	2685+23.41	-37.50	796.35	796.37
N1	2685+33.41	-37.50	796.24	796.26
N2	2685+43.41	-37.50	796.13	796.15
N. END OF N. APPR. SLAB	2685+53.41	-37.50	796.01	796.03

SB E. SLOPE CHANGE

Location	Station	Offset	Theoretical Grade Elevations	Theoretical Grade Elevations Adjusted for Grinding
S. END OF N. APPR. SLAB	2685+43.14	-25.50	795.95	795.97
N1	2685+53.14	-25.50	795.84	795.86
N2	2685+63.14	-25.50	795.72	795.74
N. END OF N. APPR. SLAB	2685+73.14	-25.50	795.59	795.61

TOP OF NORTH APPROACH SLAB ELEVATIONS (SOUTHBOUND)

SB STAGE CONSTRUCTION LINE

Location	Station	Offset	Theoretical Grade Elevations	Theoretical Grade Elevations Adjusted for Grinding
S. END OF N. APPR. SLAB	2685+45.33	-24.17	795.90	795.92
N1	2685+55.33	-24.17	795.78	795.81
N2	2685+65.33	-24.17	795.66	795.68
N. END OF N. APPR. SLAB	2685+75.33	-24.17	795.54	795.56

PROP. PGL (SB)

Location	Station	Offset	Theoretical Grade Elevations	Theoretical Grade Elevations Adjusted for Grinding
S. END OF N. APPR. SLAB	2685+62.86	-13.50	795.48	795.50
N1	2685+72.86	-13.50	795.36	795.38
N2	2685+82.86	-13.50	795.23	795.25
N. END OF N. APPR. SLAB	2685+92.86	-13.50	795.10	795.12

FACE OF SB E. PARAPET

Location	Station	Offset	Theoretical Grade Elevations	Theoretical Grade Elevations Adjusted for Grinding
S. END OF N. APPR. SLAB	2685+82.58	-1.50	794.99	795.01
N1	2685+92.58	-1.50	794.86	794.88
N2	2686+02.58	-1.50	794.72	794.74
N. END OF N. APPR. SLAB	2686+12.58	-1.50	794.58	794.60

MODEL: $MODELNAME$
FILE NAME: c:\pwworking\benesch projects\dms65238\D264C24-1010210_0211-sht-apprsel1.dgn

benesch
Alfred Benesch & Company
35 W Wacker Drive, Suite 3300
Chicago, Illinois 60601
312-565-0550 Job No. 10800

USER NAME =	DESIGNED - AAB	REVISED -	
	CHECKED - KMP	REVISED -	
PLOT SCALE =	DRAWN - KMS	REVISED -	
PLOT DATE =	CHECKED - KMP	REVISED -	

STATE OF ILLINOIS
DEPARTMENT OF TRANSPORTATION

TOP OF NORTH APPROACH SLAB ELEVATIONS (SOUTHBOUND)
STRUCTURE NO. 101-0210 & 101-0211

SHEET 28 OF 92 SHEETS

F.A.I. RTE.	SECTION	COUNTY	TOTAL SHEETS	SHEET NO.
39	(201-3)R & (4-1, 5)R	WINNEBAGO	1685	631

CONTRACT NO. 64C24

ILLINOIS | FED. AID PROJECT

2/11/2025 9:34:02 AM

FACE OF SB W. PARAPET

Location	Station	Offset	Theoretical Grade Elevations	Theoretical Grade Elevations Adjusted for Grinding
S. END OF S. APPR. SLAB	2680+77.16	-73.50	796.47	796.49
S1	2680+87.16	-73.50	796.54	796.56
S2	2680+97.16	-73.50	796.61	796.63
N. END OF S. APPR. SLAB	2681+07.16	-73.50	796.67	796.69

SB. W. SLOPE CHANGE

Location	Station	Offset	Theoretical Grade Elevations	Theoretical Grade Elevations Adjusted for Grinding
S. END OF S. APPR. SLAB	2681+16.61	-49.50	797.20	797.23
S1	2681+26.61	-49.50	797.26	797.28
S2	2681+36.61	-49.50	797.31	797.33
N. END OF S. APPR. SLAB	2681+46.61	-49.50	797.35	797.37

SB ROADWAY CROWN

Location	Station	Offset	Theoretical Grade Elevations	Theoretical Grade Elevations Adjusted for Grinding
S. END OF S. APPR. SLAB	2681+36.33	-37.50	797.49	797.51
S1	2681+46.33	-37.50	797.53	797.55
S2	2681+56.33	-37.50	797.57	797.59
N. END OF S. APPR. SLAB	2681+66.33	-37.50	797.61	797.63

SB E. SLOPE CHANGE

Location	Station	Offset	Theoretical Grade Elevations	Theoretical Grade Elevations Adjusted for Grinding
S. END OF S. APPR. SLAB	2681+56.06	-25.50	797.39	797.41
S1	2681+66.06	-25.50	797.43	797.45
S2	2681+76.06	-25.50	797.46	797.49
N. END OF S. APPR. SLAB	2681+86.06	-25.50	797.49	797.52

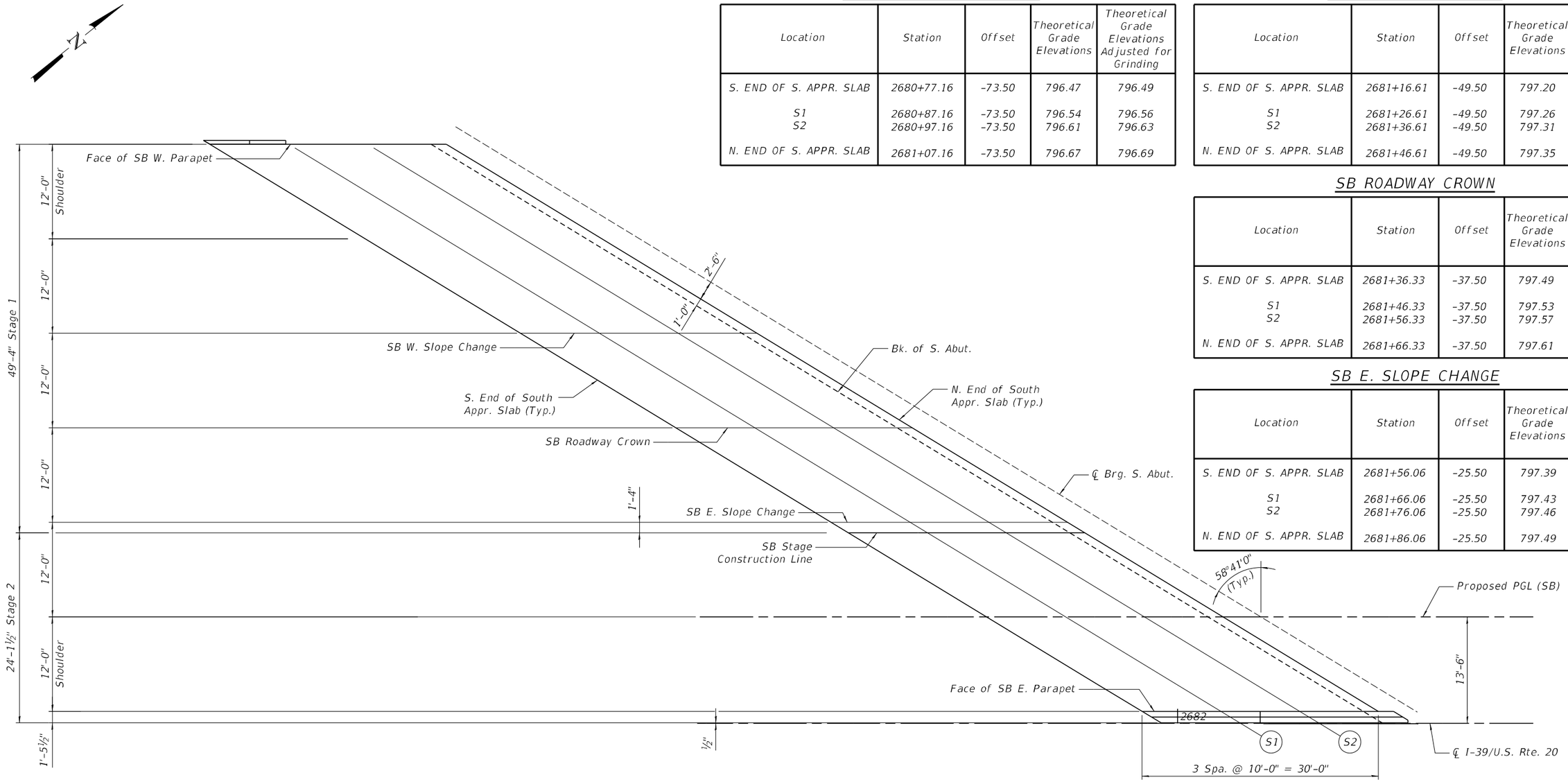

TOP OF SOUTH APPROACH SLAB ELEVATIONS (SOUTHBOUND)

SB STAGE CONSTRUCTION LINE

Location	Station	Offset	Theoretical Grade Elevations	Theoretical Grade Elevations Adjusted for Grinding
S. END OF S. APPR. SLAB	2681+58.25	-24.17	797.37	797.40
S1	2681+68.25	-24.17	797.41	797.43
S2	2681+78.25	-24.17	797.45	797.47
N. END OF S. APPR. SLAB	2681+88.25	-24.17	797.47	797.50

PROP. PGL (SB)

Location	Station	Offset	Theoretical Grade Elevations	Theoretical Grade Elevations Adjusted for Grinding
S. END OF S. APPR. SLAB	2681+75.78	-13.50	797.22	797.24
S1	2681+85.78	-13.50	797.25	797.27
S2	2681+95.78	-13.50	797.28	797.30
N. END OF S. APPR. SLAB	2682+05.78	-13.50	797.30	797.32

FACE OF SB E. PARAPET

Location	Station	Offset	Theoretical Grade Elevations	Theoretical Grade Elevations Adjusted for Grinding
S. END OF S. APPR. SLAB	2681+95.50	-1.50	797.04	797.06
S1	2682+05.50	-1.50	797.06	797.08
S2	2682+15.50	-1.50	797.08	797.10
N. END OF S. APPR. SLAB	2682+25.50	-1.50	797.09	797.12

MODEL: $MODELNAME$
FILE NAME: c:\pwworking\benesch projects\dms65238\D264C24-1010210_0211-sht-apprsl2.dgn

benesch
Alfred Benesch & Company
35 W Wacker Drive, Suite 3300
Chicago, Illinois 60601
312.565.0650 Job No. 10800

USER NAME =	DESIGNED - AAB	REVISED -	
	CHECKED - KMP	REVISED -	
PLOT SCALE =	DRAWN - KMS	REVISED -	
PLOT DATE =	CHECKED - KMP	REVISED -	

STATE OF ILLINOIS
DEPARTMENT OF TRANSPORTATION

TOP OF SOUTH APPROACH SLAB ELEVATIONS (SOUTHBOUND)
STRUCTURE NO. 101-0210 & 101-0211

SHEET 29 OF 92 SHEETS

F.A.I. RTE.	SECTION	COUNTY	TOTAL SHEETS	SHEET NO.
39	(201-3)R & (4-1, 5)R	WINNEBAGO	1685	632

CONTRACT NO. 64C24

ILLINOIS | FED. AID PROJECT

2/11/2025 9:34:05 AM

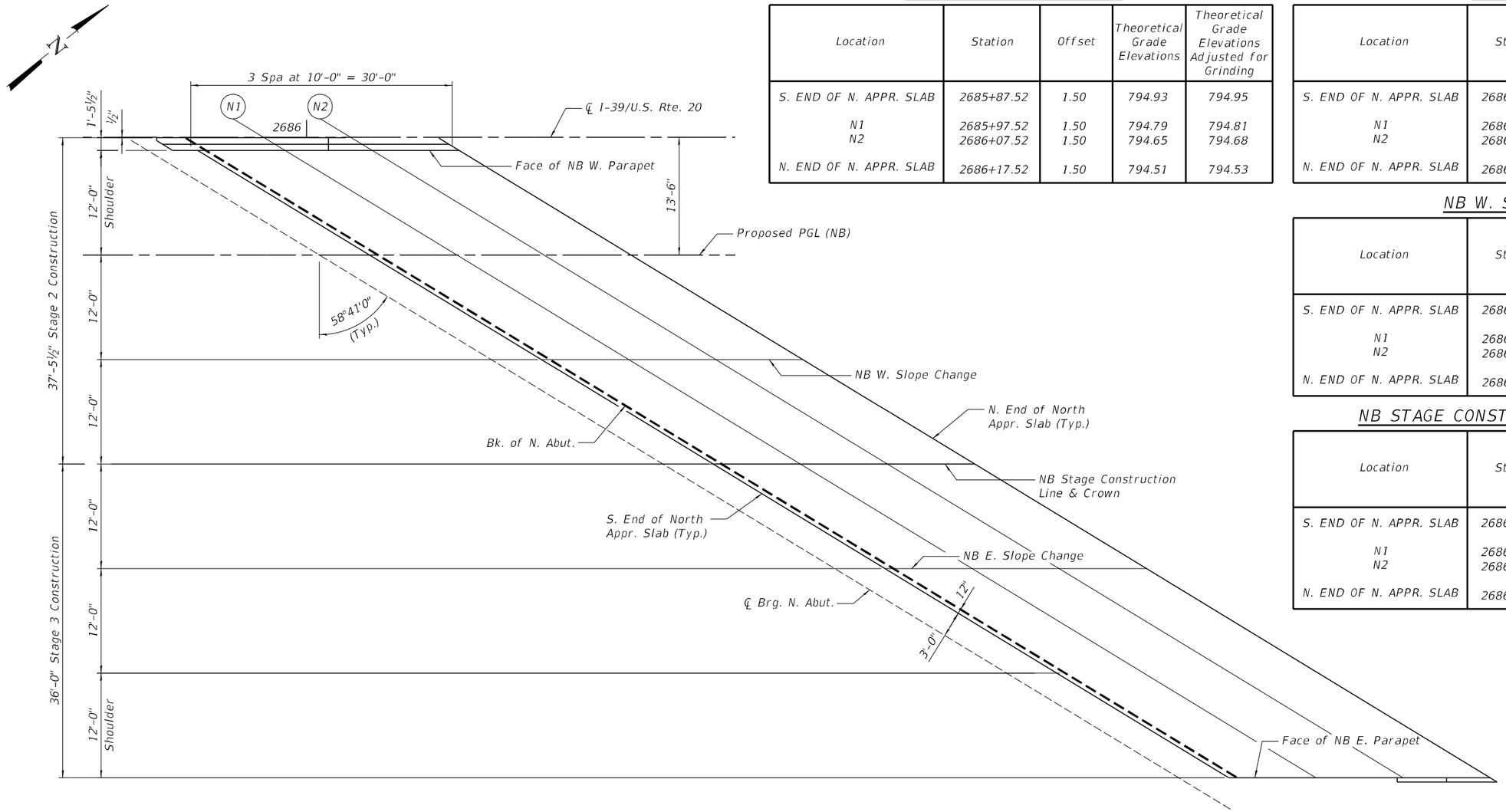

FACE OF NB W. PARAPET

Location	Station	Offset	Theoretical Grade Elevations	Theoretical Grade Elevations Adjusted for Grinding
S. END OF N. APPR. SLAB	2685+87.52	1.50	794.93	794.95
N1	2685+97.52	1.50	794.79	794.81
N2	2686+07.52	1.50	794.65	794.68
N. END OF N. APPR. SLAB	2686+17.52	1.50	794.51	794.53

PROP. PGL (NB)

Location	Station	Offset	Theoretical Grade Elevations	Theoretical Grade Elevations Adjusted for Grinding
S. END OF N. APPR. SLAB	2686+07.24	13.50	794.90	794.92
N1	2686+17.24	13.50	794.76	794.78
N2	2686+27.24	13.50	794.61	794.63
N. END OF N. APPR. SLAB	2686+37.24	13.50	794.46	794.48

NB W. SLOPE CHANGE

Location	Station	Offset	Theoretical Grade Elevations	Theoretical Grade Elevations Adjusted for Grinding
S. END OF N. APPR. SLAB	2686+26.96	25.50	794.86	794.88
N1	2686+36.96	25.50	794.71	794.73
N2	2686+46.96	25.50	794.55	794.57
N. END OF N. APPR. SLAB	2686+56.96	25.50	794.39	794.41

NB STAGE CONSTRUCTION LINE & CROWN

Location	Station	Offset	Theoretical Grade Elevations	Theoretical Grade Elevations Adjusted for Grinding
S. END OF N. APPR. SLAB	2686+46.69	37.50	794.74	794.76
N1	2686+56.69	37.50	794.58	794.60
N2	2686+66.69	37.50	794.42	794.44
N. END OF N. APPR. SLAB	2686+76.69	37.50	794.25	794.27

TOP OF NORTH APPROACH SLAB ELEVATIONS (NORTHBOUND)

NB E. SLOPE CHANGE

Location	Station	Offset	Theoretical Grade Elevations	Theoretical Grade Elevations Adjusted for Grinding
S. END OF N. APPR. SLAB	2686+66.41	49.50	794.24	794.26
N1	2686+76.41	49.50	794.08	794.10
N2	2686+86.41	49.50	793.91	793.93
N. END OF N. APPR. SLAB	2686+96.41	49.50	793.73	793.75

FACE OF NB E. PARAPET

Location	Station	Offset	Theoretical Grade Elevations	Theoretical Grade Elevations Adjusted for Grinding
S. END OF N. APPR. SLAB	2687+05.86	73.50	793.09	793.11
N1	2687+15.86	73.50	792.90	792.93
N2	2687+25.86	73.50	792.72	792.74
N. END OF N. APPR. SLAB	2687+35.86	73.50	792.53	792.55

MODEL: $MODELNAME$
FILE NAME: c:\pwworkdir\benesch projects\projects\dms65238\D264C24-1010210_0211-sht-apprset3.dgn

benesch
Alfred Benesch & Company
35 W Wacker Drive, Suite 3300
Chicago, Illinois 60601
312.969.0456 Job No. 10800

USER NAME =	DESIGNED - AAB	REVISED -	
	CHECKED - KMP	REVISED -	
PLOT SCALE =	DRAWN - KMS	REVISED -	
PLOT DATE =	CHECKED - KMP	REVISED -	

STATE OF ILLINOIS
DEPARTMENT OF TRANSPORTATION

TOP OF NORTH APPROACH SLAB ELEVATIONS (NORTHBOUND)
STRUCTURE NO. 101-0210 & 101-0211

SHEET 30 OF 92 SHEETS

F.A.I. RTE.	SECTION	COUNTY	TOTAL SHEETS	SHEET NO.
39	(201-3)R & (4-1, 5)R	WINNEBAGO	1685	633

CONTRACT NO. 64C24

ILLINOIS FED. AID PROJECT

2/11/2025 9:34:09 AM

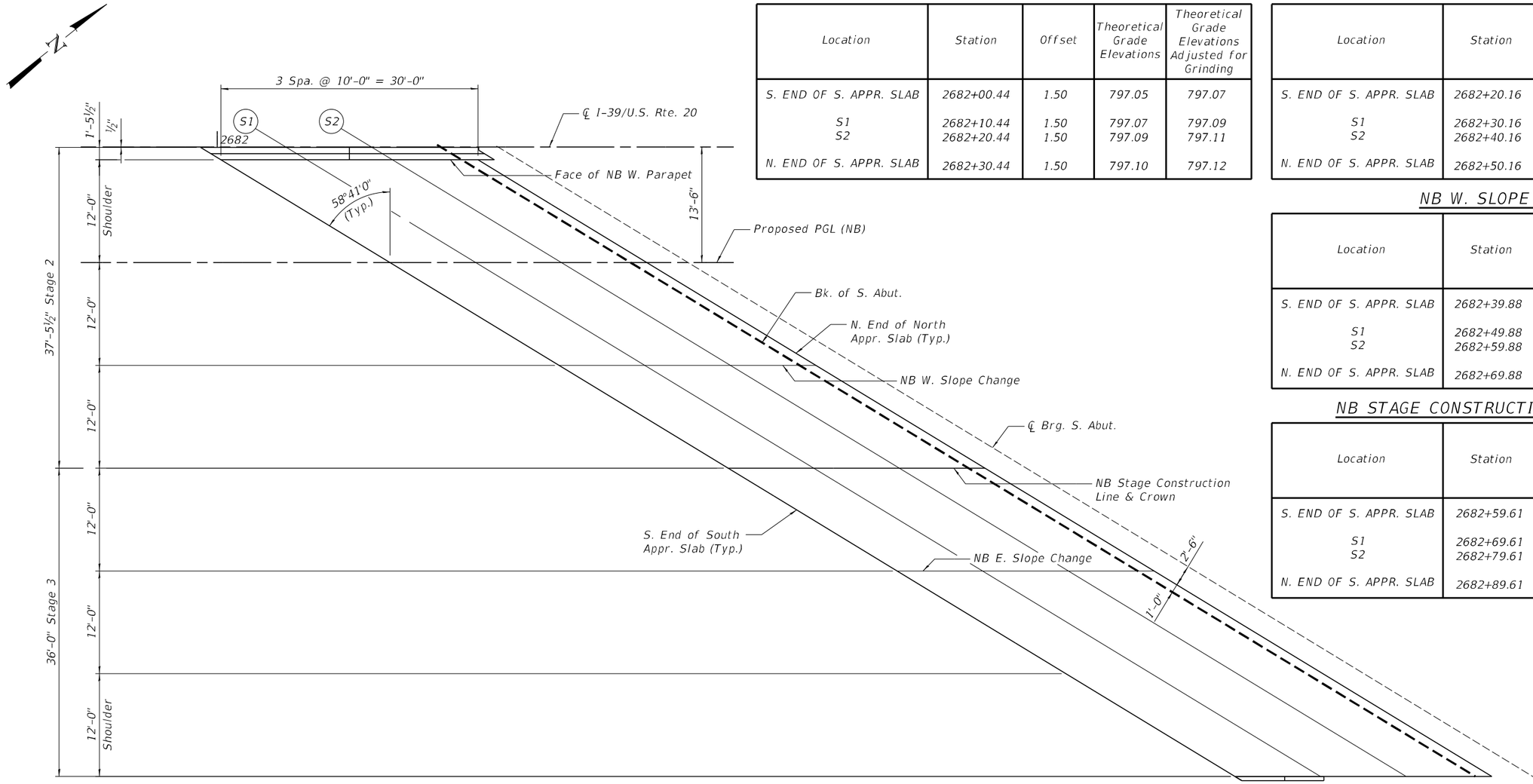

FACE OF NB W. PARAPET

Location	Station	Offset	Theoretical Grade Elevations	Theoretical Grade Elevations Adjusted for Grinding
S. END OF S. APPR. SLAB	2682+00.44	1.50	797.05	797.07
S1	2682+10.44	1.50	797.07	797.09
S2	2682+20.44	1.50	797.09	797.11
N. END OF S. APPR. SLAB	2682+30.44	1.50	797.10	797.12

PROP. PGL (NB)

Location	Station	Offset	Theoretical Grade Elevations	Theoretical Grade Elevations Adjusted for Grinding
S. END OF S. APPR. SLAB	2682+20.16	13.50	797.33	797.35
S1	2682+30.16	13.50	797.34	797.36
S2	2682+40.16	13.50	797.35	797.37
N. END OF S. APPR. SLAB	2682+50.16	13.50	797.35	797.37

NB W. SLOPE CHANGE

Location	Station	Offset	Theoretical Grade Elevations	Theoretical Grade Elevations Adjusted for Grinding
S. END OF S. APPR. SLAB	2682+39.88	25.50	797.59	797.61
S1	2682+49.88	25.50	797.59	797.61
S2	2682+59.88	25.50	797.59	797.61
N. END OF S. APPR. SLAB	2682+69.88	25.50	797.59	797.61

NB STAGE CONSTRUCTION LINE & CROWN

Location	Station	Offset	Theoretical Grade Elevations	Theoretical Grade Elevations Adjusted for Grinding
S. END OF S. APPR. SLAB	2682+59.61	37.50	797.77	797.79
S1	2682+69.61	37.50	797.77	797.79
S2	2682+79.61	37.50	797.76	797.78
N. END OF S. APPR. SLAB	2682+89.61	37.50	797.75	797.77

TOP OF SOUTH APPROACH SLAB ELEVATIONS (NORTHBOUND)

NB E. SLOPE CHANGE

Location	Station	Offset	Theoretical Grade Elevations	Theoretical Grade Elevations Adjusted for Grinding
S. END OF S. APPR. SLAB	2682+79.33	49.50	797.58	797.60
S1	2682+89.33	49.50	797.57	797.59
S2	2682+99.33	49.50	797.56	797.58
N. END OF S. APPR. SLAB	2683+09.33	49.50	797.54	797.56

FACE OF NB E. PARAPET

Location	Station	Offset	Theoretical Grade Elevations	Theoretical Grade Elevations Adjusted for Grinding
S. END OF S. APPR. SLAB	2683+18.78	73.50	797.04	797.06
S1	2683+28.78	73.50	797.01	797.03
S2	2683+38.78	73.50	796.98	797.00
N. END OF S. APPR. SLAB	2683+48.78	73.50	796.94	796.96

MODEL: SMODELNAMES
FILE NAME: c:\pwworkdir\benesch projects\projects\dms65238\D264C24-1010210_0211-sht-tapprsel1.dgn

benesch
Alfred Benesch & Company
35 W Wacker Drive, Suite 3300
Chicago, Illinois 60601
312-565-0450 Job No. 10800

USER NAME =	DESIGNED - AAB	REVISED -	
	CHECKED - KMP	REVISED -	
PLOT SCALE =	DRAWN - KMS	REVISED -	
PLOT DATE =	CHECKED - KMP	REVISED -	

STATE OF ILLINOIS
DEPARTMENT OF TRANSPORTATION

TOP OF SOUTH APPROACH SLAB ELEVATIONS (NORTHBOUND)
STRUCTURE NO. 101-0210 & 101-0211

SHEET 31 OF 92 SHEETS

F.A.I. RTE.	SECTION	COUNTY	TOTAL SHEETS	SHEET NO.
39	(201-3)R & (4-1, 5)R	WINNEBAGO	1685	634
		CONTRACT NO. 64C24		
		ILLINOIS	FED. AID PROJECT	

2/11/2025 9:34:13 AM

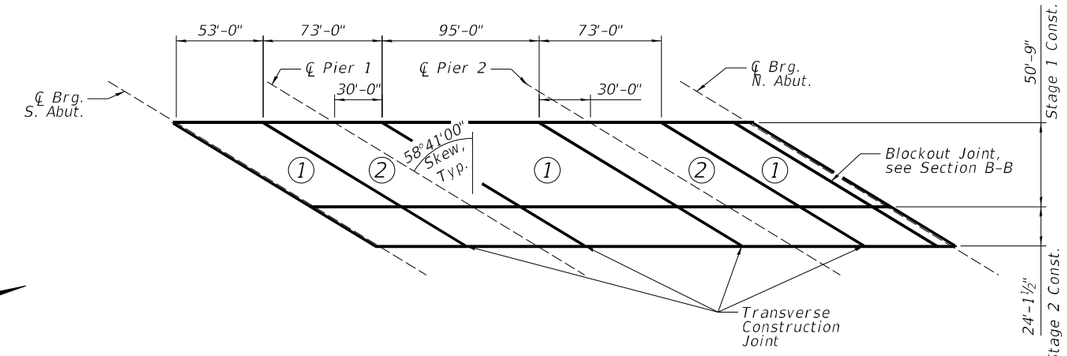

DECK POUR SEQUENCE

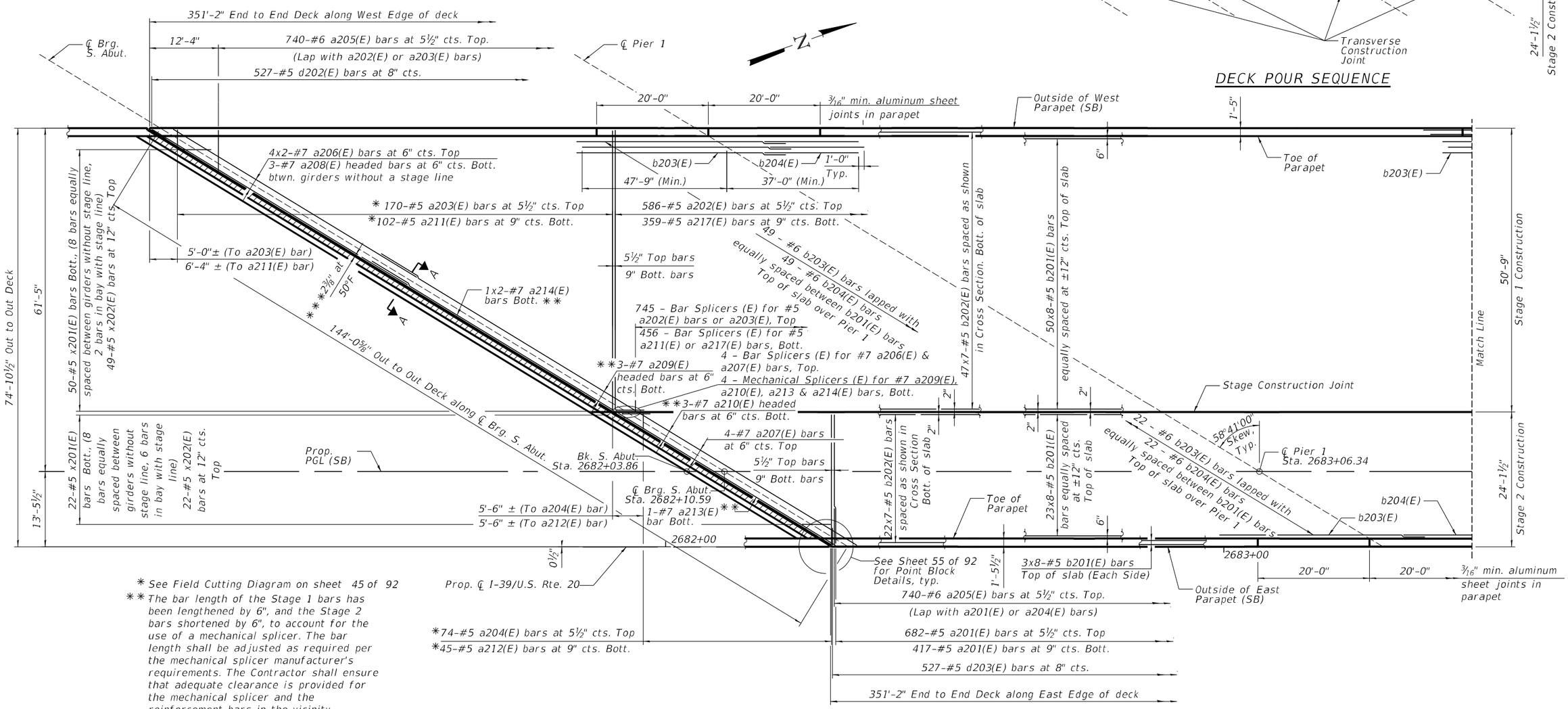

SOUTHBOUND PARTIAL PLAN

* See Field Cutting Diagram on sheet 45 of 92

** The bar length of the Stage 1 bars has been lengthened by 6", and the Stage 2 bars shortened by 6", to account for the use of a mechanical splicer. The bar length shall be adjusted as required per the mechanical splicer manufacturer's requirements. The Contractor shall ensure that adequate clearance is provided for the mechanical splicer and the reinforcement bars in the vicinity.

*** Dimension showing concrete opening. For joint opening, see sheet 55 of 92.

MINIMUM BAR LAP

#5 bar = 3'-6"
#6 bar = 4'-10"
#7 bar = 4'-8"

NOTES:

1. See Sheets 36, 44 and 45 of 92 for Superstructure Details, Section A-A, Section B-B and Deck Cross Section.
2. See Sheet 45 of 92 for Bill of Materials.
3. Bars indicated thus 36x8 - #5 etc. indicates 36 lines of bars with 8 lengths per line.
4. Dimensions are based on a Rolled Rail Strip Seal Joint. If the Contractor elects to use the Welded Rail Strip Seal Joint, deck dimensions may require adjustments to satisfy the details on sheet 55 of 92.
5. When the deck pour is stopped for the day at one or more of the transverse bonded construction joints in the deck pouring sequence as shown, the next pour shall not be made until both of the following are met:

   1. At least 72 hours shall have elapsed from the end of the previous pour.
   2. The concrete strength shall have attained a minimum flexural strength of 675 psi or a minimum compressive strength of 4000 psi.

benesch
Alfred Benesch & Company
35 W Wacker Drive, Suite 3300
Chicago, Illinois 60601
312-969-0450 Job No. 10800

USER NAME =	DESIGNED - SHK	REVISED -	
	CHECKED - TPS	REVISED -	
PLOT SCALE =	DRAWN - KMS	REVISED -	
PLOT DATE =	CHECKED - TPS	REVISED -	

STATE OF ILLINOIS
DEPARTMENT OF TRANSPORTATION

DECK PLAN (SOUTHBOUND 1 OF 2)
STRUCTURE NO. 101-0210 & 101-0211

SHEET 32 OF 92 SHEETS

F.A.I. RTE.	SECTION	COUNTY	TOTAL SHEETS	SHEET NO.
39	(201-3)R & (4-1, 5)R	WINNEBAGO	1685	635
		CONTRACT NO. 64C24		
	ILLINOIS	FED. AID PROJECT		

MODEL: $MODELNAMES
FILE NAME: c:\pwworkdir\benesch projects\projects\dms65238\D264C24-1010210_0211-sht-deckpln1.dgn
2/11/2025 9:34:16 AM

* See Field Cutting Diagram on sheet 45 of 92.

** The bar length of the Stage 1 bars has been lengthened by 6", and the Stage 2 bars shortened by 6", to account for the use of a mechanical splicer. The bar length shall be adjusted as required per the mechanical splicer manufacturer's requirements. The Contractor shall ensure that adequate clearance is provided for the mechanical splicer and the reinforcement bars in the vicinity.

*** Dimension showing concrete opening. For joint opening, see sheet 53 of 92.

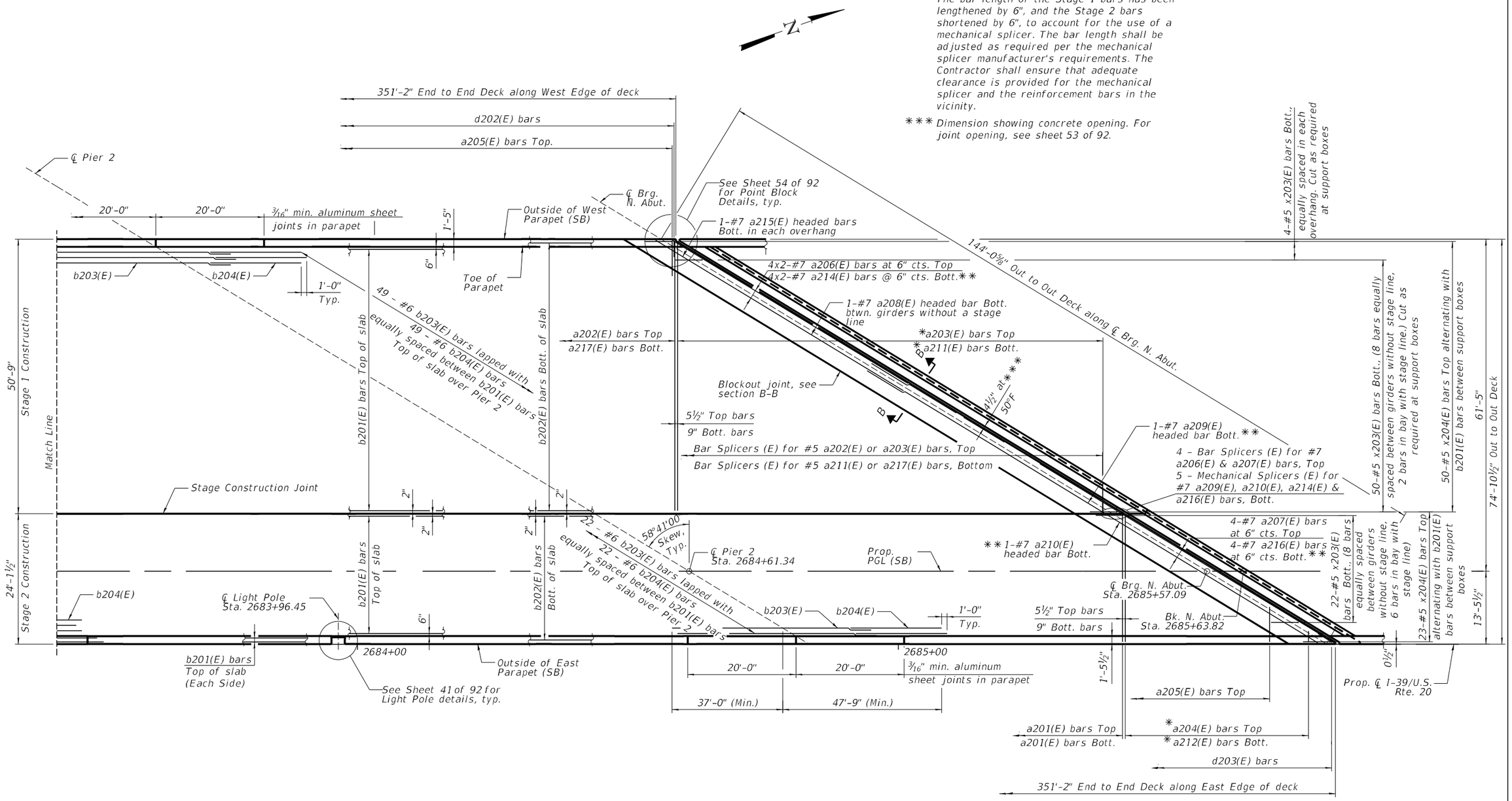

MINIMUM BAR LAP

#5 bar = 3'-6"
#6 bar = 4'-10"
#7 bar = 4'-8"

SOUTHBOUND PARTIAL PLAN

MODEL: sMODELNAMES
FILE NAME: c:\pwworkdir\benesch projects\projects\dms65238\D264C24-1010210_0211-sht-deck.dgn

2/11/2025 9:34:20 AM

benesch
Alfred Benesch & Company
35 W Wacker Drive, Suite 3300
Chicago, Illinois 60601
312-565-0150 Job No. 10800

USER NAME =	DESIGNED - SHK	REVISED -	
	CHECKED - TPS	REVISED -	
PLOT SCALE =	DRAWN - KMS	REVISED -	
PLOT DATE =	CHECKED - TPS	REVISED -	

STATE OF ILLINOIS
DEPARTMENT OF TRANSPORTATION

DECK PLAN (SOUTHBOUND 2 OF 2)
STRUCTURE NO. 101-0210 & 101-0211

SHEET 33 OF 92 SHEETS

F.A.I. RTE.	SECTION	COUNTY	TOTAL SHEETS	SHEET NO.
39	(201-3)R & (4-1, 5)R	WINNEBAGO	1685	636
		CONTRACT NO. 64C24		
		ILLINOIS	FED. AID PROJECT	

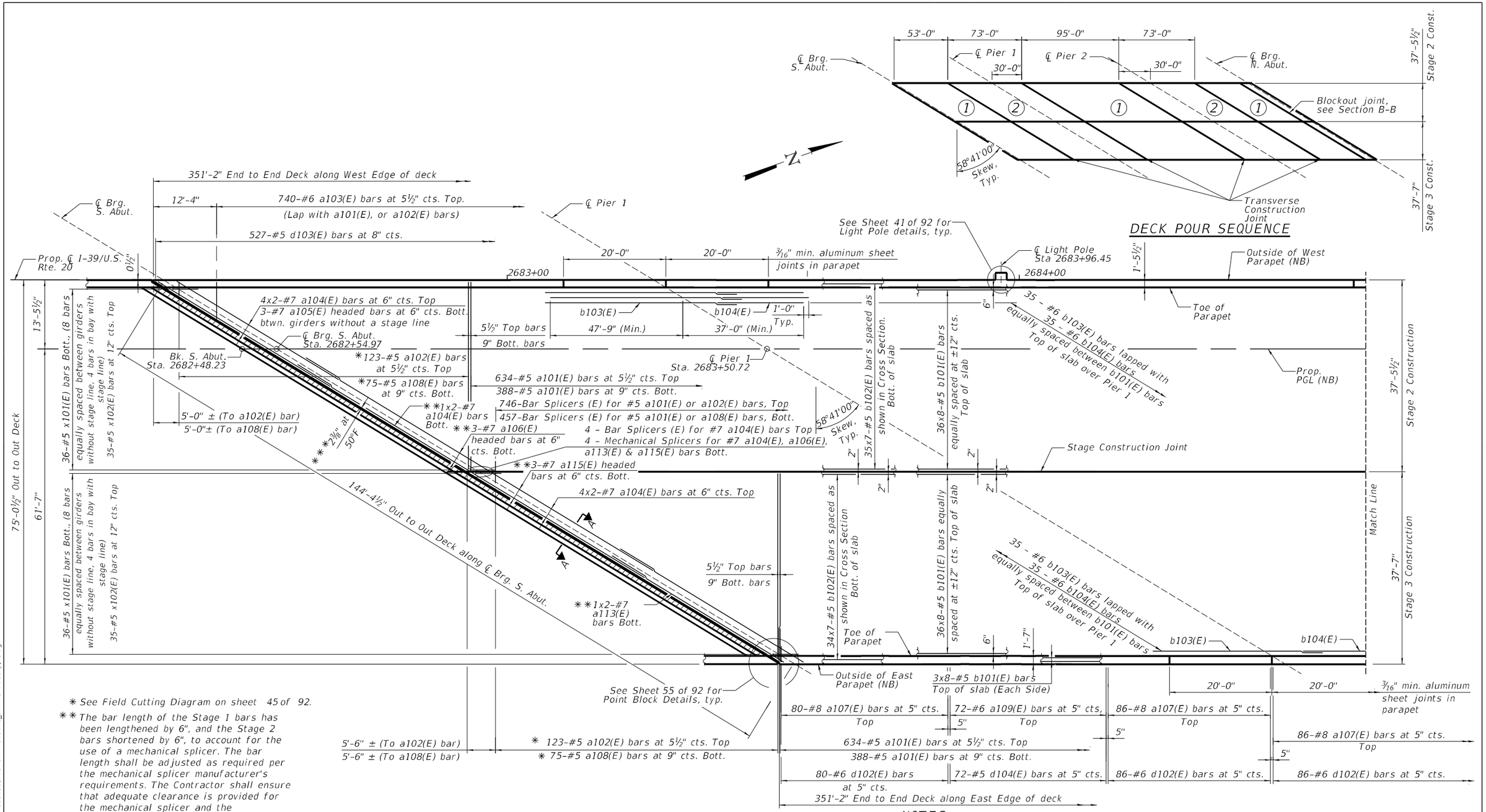

NORTHBOUND PARTIAL PLAN

* See Field Cutting Diagram on sheet 45 of 92.

** The bar length of the Stage 1 bars has been lengthened by 6", and the Stage 2 bars shortened by 6", to account for the use of a mechanical splicer. The bar length shall be adjusted as required per the mechanical splicer manufacturer's requirements. The Contractor shall ensure that adequate clearance is provided for the mechanical splicer and the reinforcement bars in the vicinity.

*** Dimension showing concrete opening. For joint opening, see sheet 55 of 92.

MINIMUM BAR LAP

#5 bar = 3'-6"
#6 bar = 4'-10"
#7 bar = 4'-8"

NOTES:

1. See Sheets 36, 44 and 45 of 92 for Superstructure Details, Section A-A, Section B-B and Deck Cross Section.
2. See Sheet 45 of 92 for Bill of Materials.
3. Bars indicated thus 36x8 - #5 etc. indicates 36 lines of bars with 8 lengths per line.
4. Dimensions are based on a Rolled Rail Strip Seal Joint. If the Contractor elects to use the Welded Rail Strip Seal Joint, deck dimensions may require adjustments to satisfy the details on sheet 55 of 92.
5. When the deck pour is stopped for the day at one or more of the transverse bonded construction joints in the deck pouring sequence as shown, the next pour shall not be made until both of the following are met:

   1. At least 72 hours shall have elapsed from the end of the previous pour.
   2. The concrete strength shall have attained a minimum flexural strength of 675 psi or a minimum compressive strength of 4000 psi.

MODEL: SMODELNAMES
FILE NAME: c:\pwworkdir\benesch projects\dms65238\D264C24-1010210_0211-sht-deck01b3.dgn

benesch
Alfred Benesch & Company
35 W Wacker Drive, Suite 3300
Chicago, Illinois 60601
312-565-0450 Job No. 10800

USER NAME =	DESIGNED - SHK	REVISED -	
	CHECKED - TPS	REVISED -	
PLOT SCALE =	DRAWN - KMS	REVISED -	
PLOT DATE =	CHECKED - TPS	REVISED -	

STATE OF ILLINOIS
DEPARTMENT OF TRANSPORTATION

DECK PLAN (NORTHBOUND 1 OF 2)
STRUCTURE NO. 101-0210 & 101-0211

SHEET 34 OF 92 SHEETS

F.A.I. RTE.	SECTION	COUNTY	TOTAL SHEETS	SHEET NO.
39	(201-3)R & (4-1, 5)R	WINNEBAGO	1685	637
		CONTRACT NO. 64C24		
		ILLINOIS	FED. AID PROJECT	

2/11/2025 9:34:23 AM

* See Field Cutting Diagram on sheet 45 of 92.

** The bar length of the Stage 1 bars has been lengthened by 6", and the Stage 2 bars shortened by 6", to account for the use of a mechanical splicer. The bar length shall be adjusted as required per the mechanical splicer manufacturer's requirements. The Contractor shall ensure that adequate clearance is provided for the mechanical splicer and the reinforcement bars in the vicinity.

*** Dimension showing concrete opening. For joint opening, see sheet 53 of 92.

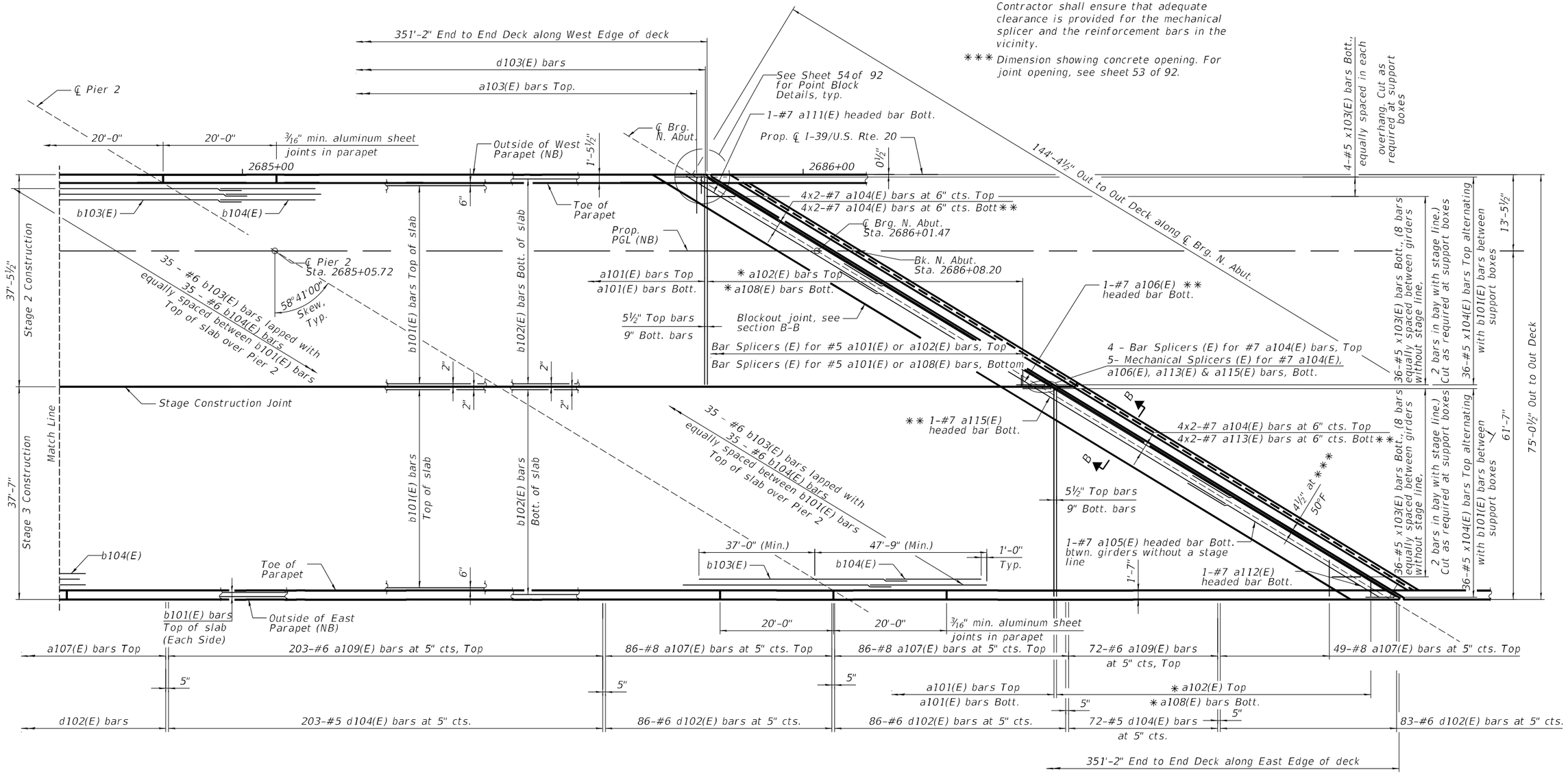

MINIMUM BAR LAP

#5 bar = 3'-6"
#6 bar = 4'-10"
#7 bar = 4'-8"

NORTHBOUND PARTIAL PLAN

MODEL: SMODELNAMES
FILE NAME: c:\pwworkdir\benesch projects\projects\dms65238\D264C24-1010210_0211-sht-deck.dgn

benesch	USER NAME =	DESIGNED - SHK	REVISED -	STATE OF ILLINOIS DEPARTMENT OF TRANSPORTATION	DECK PLAN (NORTHBOUND 2 OF 2) STRUCTURE NO. 101-0210 & 101-0211
Alfred Benesch & Company 35 W Wacker Drive, Suite 3300 Chicago, Illinois 60601 312-565-0450 Job No. 10800		CHECKED - TPS	REVISED -		
	PLOT SCALE =	DRAWN - KMS	REVISED -		
	PLOT DATE =	CHECKED - TPS	REVISED -		SHEET 35 OF 92 SHEETS

F.A.I. RTE.	SECTION	COUNTY	TOTAL SHEETS	SHEET NO.
39	(201-3)R & (4-1, 5)R	WINNEBAGO	1685	638
		CONTRACT NO. 64C24		
		ILLINOIS	FED. AID PROJECT	

2/11/2025 9:34:28 AM

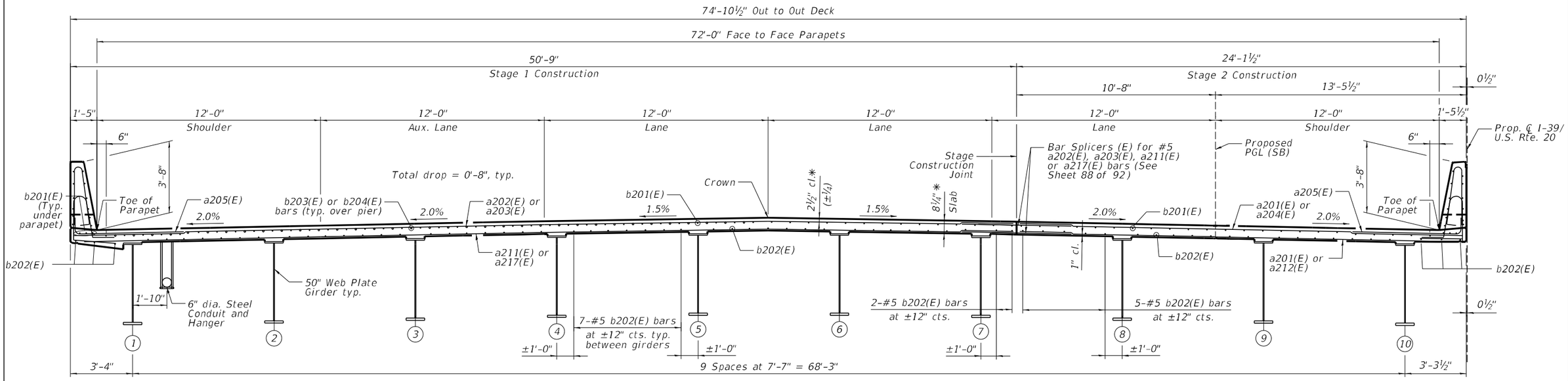

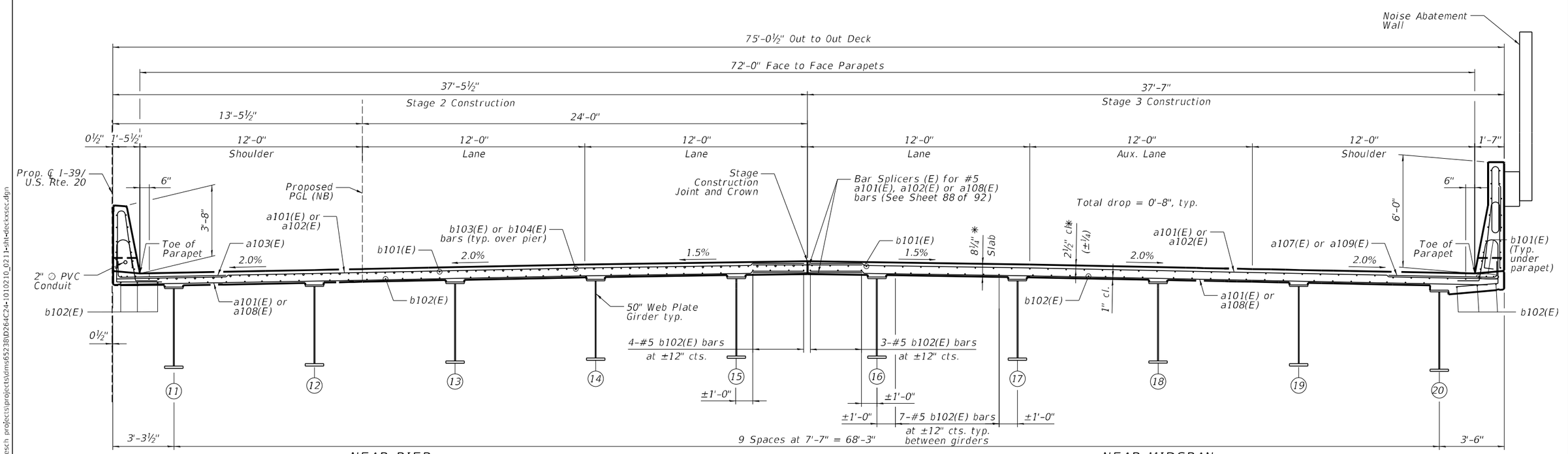

NOTE:
See Electrical Plans for the conduit and junction box attached to the underside of deck.

benesch
Alfred Benesch & Company
35 W Wacker Drive, Suite 3300
Chicago, Illinois 60601
312-565-0450 Job No. 10800

USER NAME =	DESIGNED - SHK	REVISED -	
	CHECKED - TPS	REVISED -	
PLOT SCALE =	DRAWN - KMS	REVISED -	
PLOT DATE =	CHECKED - TPS	REVISED -	

STATE OF ILLINOIS
DEPARTMENT OF TRANSPORTATION

DECK CROSS SECTION
STRUCTURE NO. 101-0210 & 101-0211
SHEET 36 OF 92 SHEETS

F.A.I. RTE.	SECTION	COUNTY	TOTAL SHEETS	SHEET NO.
39	(201-3)R & (4-1, 5)R	WINNEBAGO	1685	639
		CONTRACT NO. 64C24		
		ILLINOIS	FED. AID PROJECT	

MODEL: SMODELNAMES
FILE NAME: c:\pwworkdir\benesch projects\projects\dms65238\D264C24-1010210_0211-sht-deckxsec.dgn
2/11/2025 9:34:32 AM

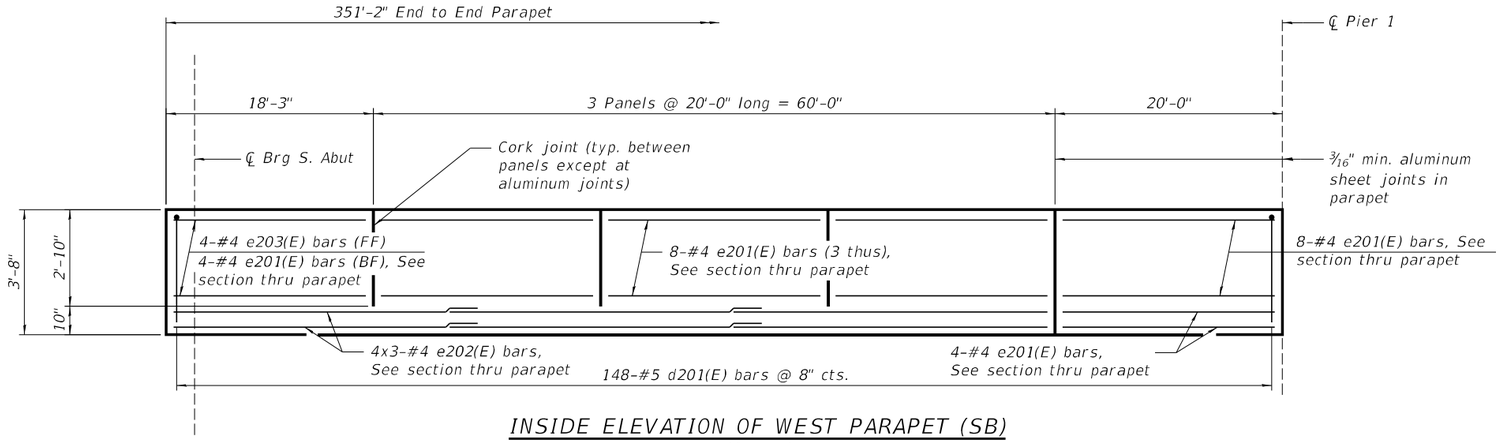

INSIDE ELEVATION OF WEST PARAPET (SB)

(Span 1)

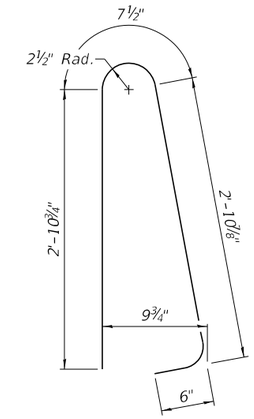

BAR d201(E)

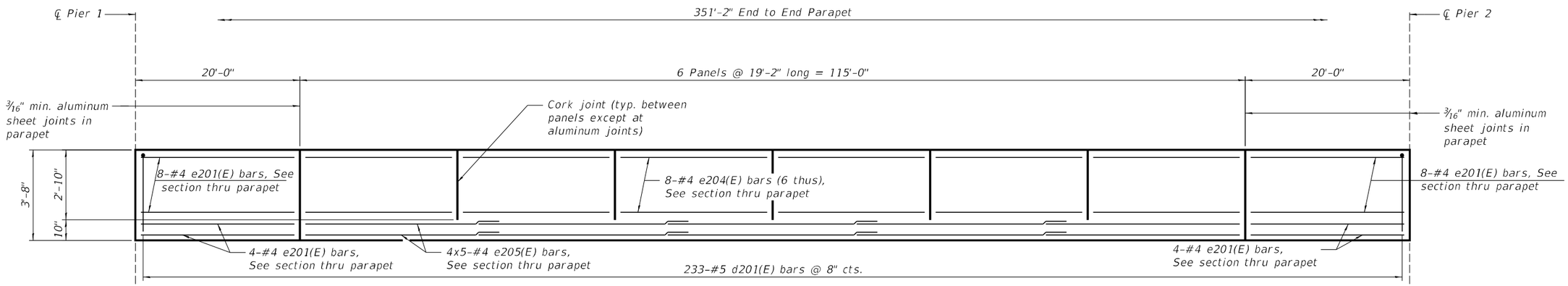

INSIDE ELEVATION OF WEST PARAPET (SB)

(Span 2)

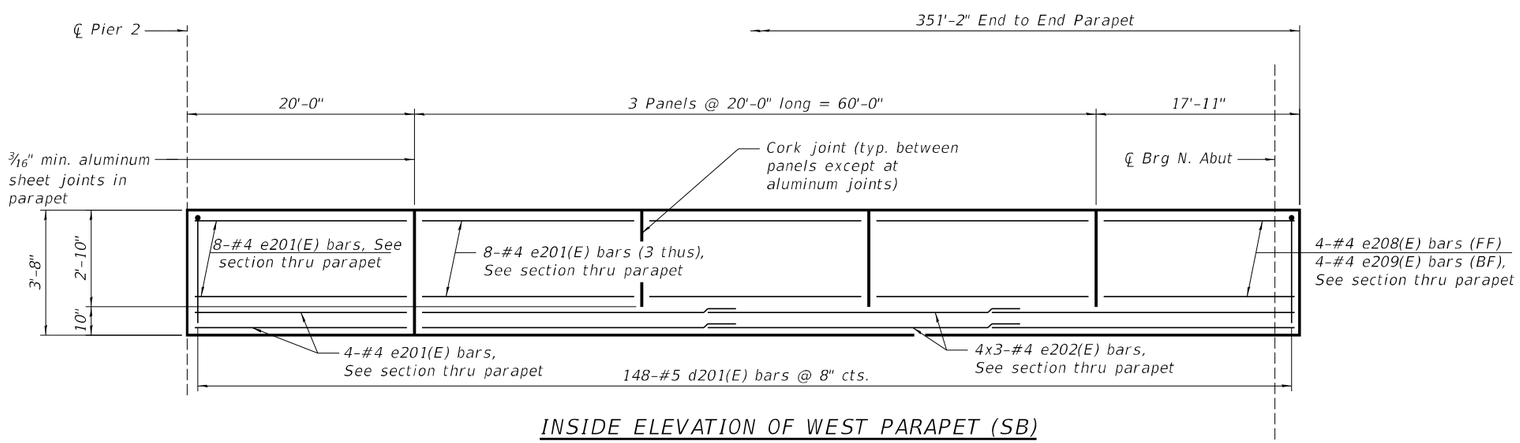

INSIDE ELEVATION OF WEST PARAPET (SB)

(Span 3)

MINIMUM BAR LAP

#4 bar = 2'-5"

NOTES:

1. Bars indicated thus 4x5-#4 etc. indicates 4 lines of bars with 5 lengths per line.
2. All horizontal dimensions shown are taken at the toe of the parapet.
3. For sections thru parapets, see sheet 42 of 92.

MODEL: SMODELNAMES
FILE NAME: c:\pwworkdir\benesch projects\projects\dms65238\D264C24-1010210_0211-sht-prpt01.dgn

benesch
Alfred Benesch & Company
35 W Wacker Drive, Suite 3300
Chicago, Illinois 60601
312-565-0450 Job No. 10800

USER NAME =	DESIGNED - SHK	REVISED -	
	CHECKED - TPS	REVISED -	
PLOT SCALE =	DRAWN - KMS	REVISED -	
PLOT DATE =	CHECKED - TPS	REVISED -	

STATE OF ILLINOIS
DEPARTMENT OF TRANSPORTATION

WEST PARAPET ELEVATION (SOUTHBOUND)
STRUCTURE NO. 101-0210 & 101-0211

SHEET 37 OF 92 SHEETS

F.A.I. RTE.	SECTION	COUNTY	TOTAL SHEETS	SHEET NO.
39	(201-3)R & (4-1, 5)R	WINNEBAGO	1685	640
		CONTRACT NO. 64C24		
		ILLINOIS	FED. AID PROJECT	

2/11/2025 9:34:35 AM

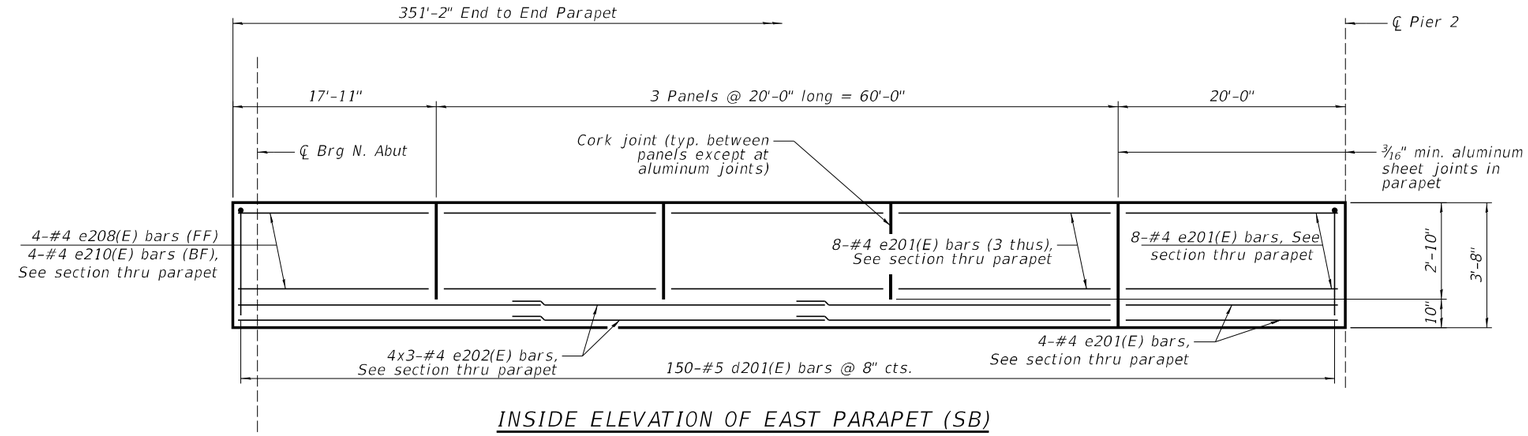

INSIDE ELEVATION OF EAST PARAPET (SB)

(Span 3)

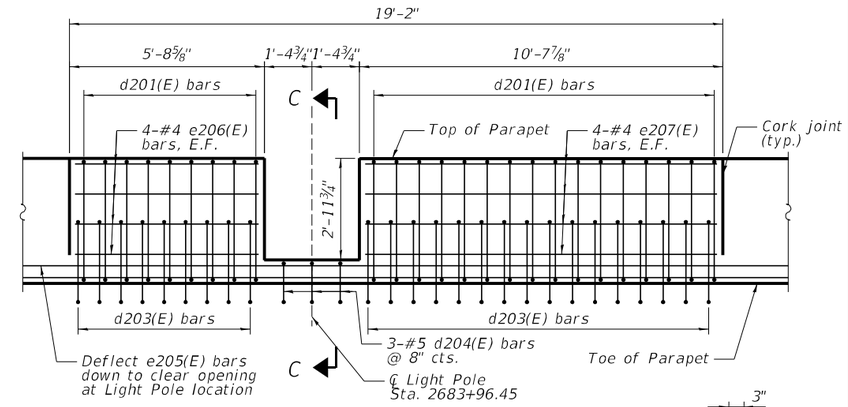

DETAIL A

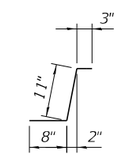

BAR d204(E)

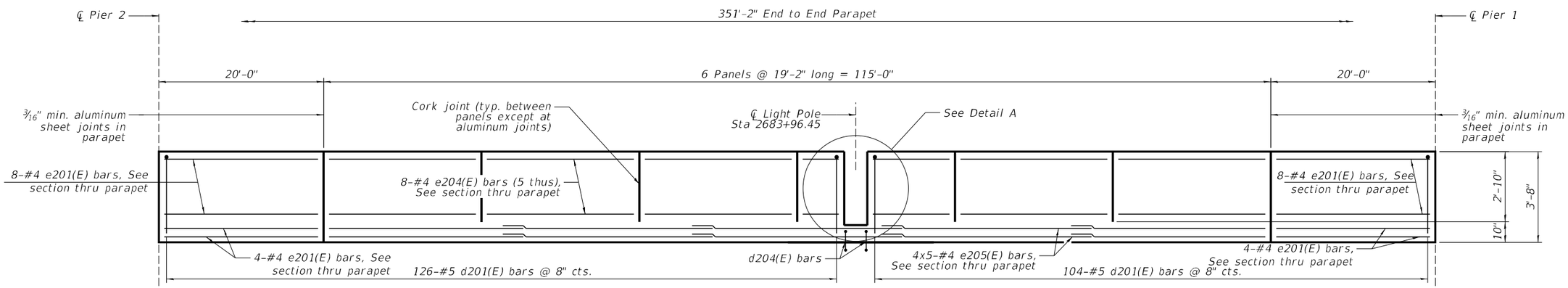

INSIDE ELEVATION OF EAST PARAPET (SB)

(Span 2)

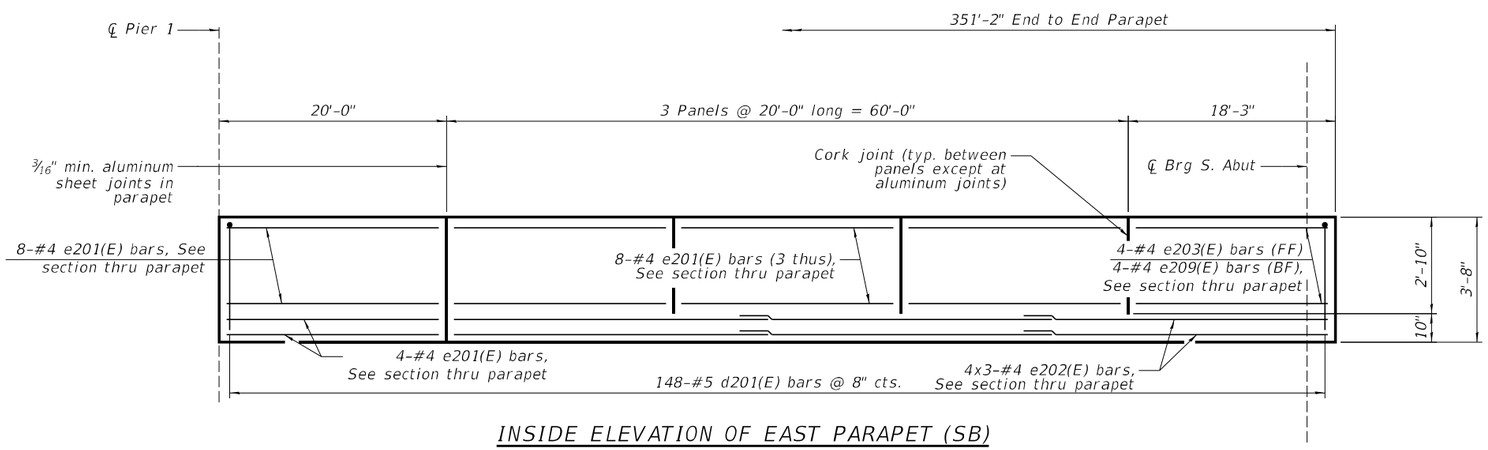

INSIDE ELEVATION OF EAST PARAPET (SB)

(Span 1)

MINIMUM BAR LAP

#4 bar = 2'-5"

NOTES:

1. Bars indicated thus 4x5-#4 etc. indicates 4 lines of bars with 5 lengths per line.
2. All horizontal dimensions shown are taken at the toe of the parapet.
3. For sections thru parapets, see sheet 42 of 92.
4. For Section C-C, see sheet 41 of 92.

MODEL: SMODELNAMES
FILE NAME: c:\pwworkdir\benesch projects\projects\dms65238\D264C24-1010210_0211-sht-prpt42.dgn

benesch
Alfred Benesch & Company
35 W Wacker Drive, Suite 3300
Chicago, Illinois 60601
312-565-0450 Job No. 10800

USER NAME =	DESIGNED - SHK	REVISED -	
	CHECKED - TPS	REVISED -	
PLOT SCALE =	DRAWN - KMS	REVISED -	
PLOT DATE =	CHECKED - TPS	REVISED -	

STATE OF ILLINOIS
DEPARTMENT OF TRANSPORTATION

EAST PARAPET ELEVATION (SOUTHBOUND)
STRUCTURE NO. 101-0210 & 101-0211

SHEET 38 OF 92 SHEETS

F.A.I. RTE.	SECTION	COUNTY	TOTAL SHEETS	SHEET NO.
39	(201-3)R & (4-1, 5)R	WINNEBAGO	1685	641
		CONTRACT NO. 64C24		
		ILLINOIS	FED. AID PROJECT	

2/11/2025 9:34:38 AM

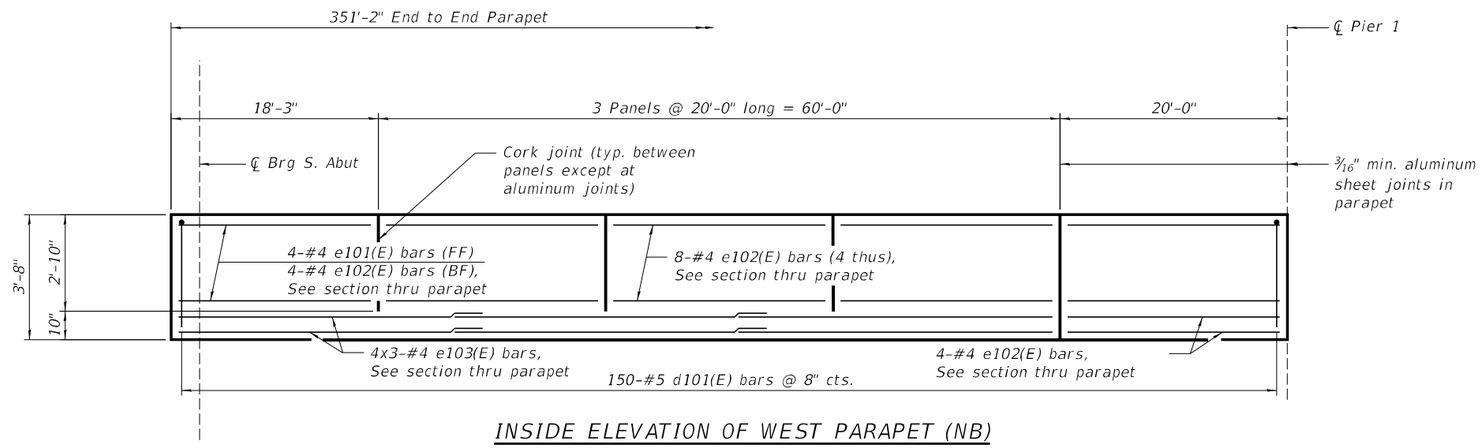

INSIDE ELEVATION OF WEST PARAPET (NB)

(Span 1)

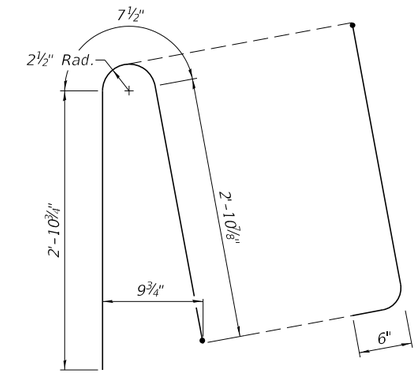

BAR d101(E)

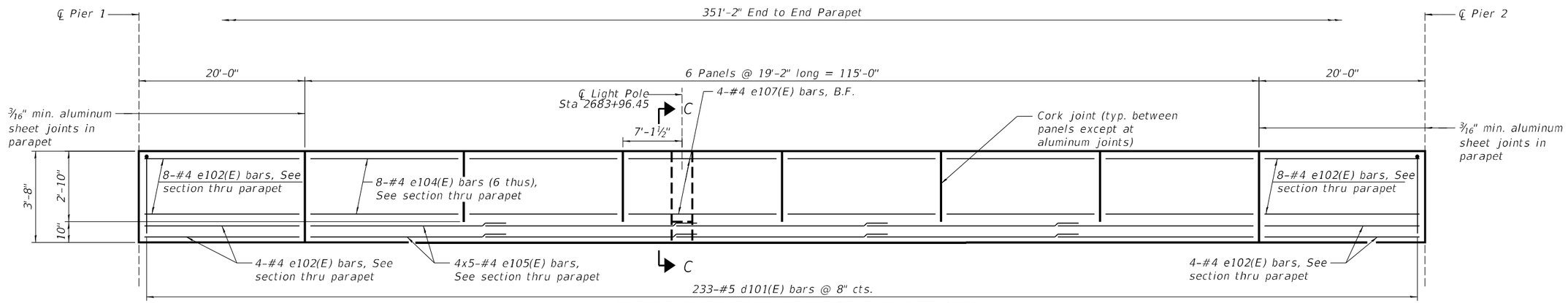

INSIDE ELEVATION OF WEST PARAPET (NB)

(Span 2)

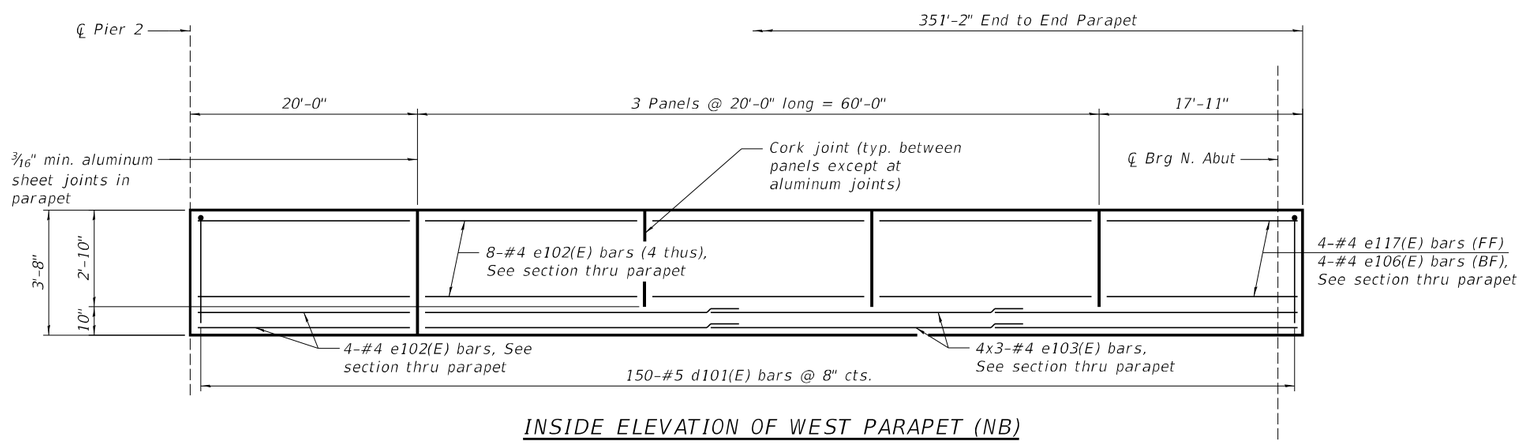

INSIDE ELEVATION OF WEST PARAPET (NB)

(Span 3)

MINIMUM BAR LAP

#4 bar = 2'-5"

NOTES:

1. Bars indicated thus 4x5-#4 etc. indicates 4 lines of bars with 5 lengths per line.
2. All horizontal dimensions shown are taken at the toe of the parapet.
3. Provide expansion / deflection couplings for embedded conduit at parapet expansion joint locations.
4. For sections thru parapets, see sheet 42 of 92.
5. For Section C-C, see sheet 41 of 92.

MODEL: $MODELNAMES
FILE NAME: c:\pwworkdir\benesch projects\projects\dms65238\D264C24-1010210_0211-sht-prpt.dgn

benesch
Alfred Benesch & Company
35 W Wacker Drive, Suite 3300
Chicago, Illinois 60601
312-565-0450 Job No. 10800

USER NAME =	DESIGNED - SHK	REVISED -	
	CHECKED - TPS	REVISED -	
PLOT SCALE =	DRAWN - KMS	REVISED -	
PLOT DATE =	CHECKED - TPS	REVISED -	

STATE OF ILLINOIS
DEPARTMENT OF TRANSPORTATION

WEST PARAPET ELEVATION (NORTHBOUND)
STRUCTURE NO. 101-0210 & 101-0211

SHEET 39 OF 92 SHEETS

F.A.I. RTE.	SECTION	COUNTY	TOTAL SHEETS	SHEET NO.
39	(201-3)R & (4-1, 5)R	WINNEBAGO	1685	642
		CONTRACT NO. 64C24		
		ILLINOIS	FED. AID PROJECT	

2/11/2025 9:34:41 AM

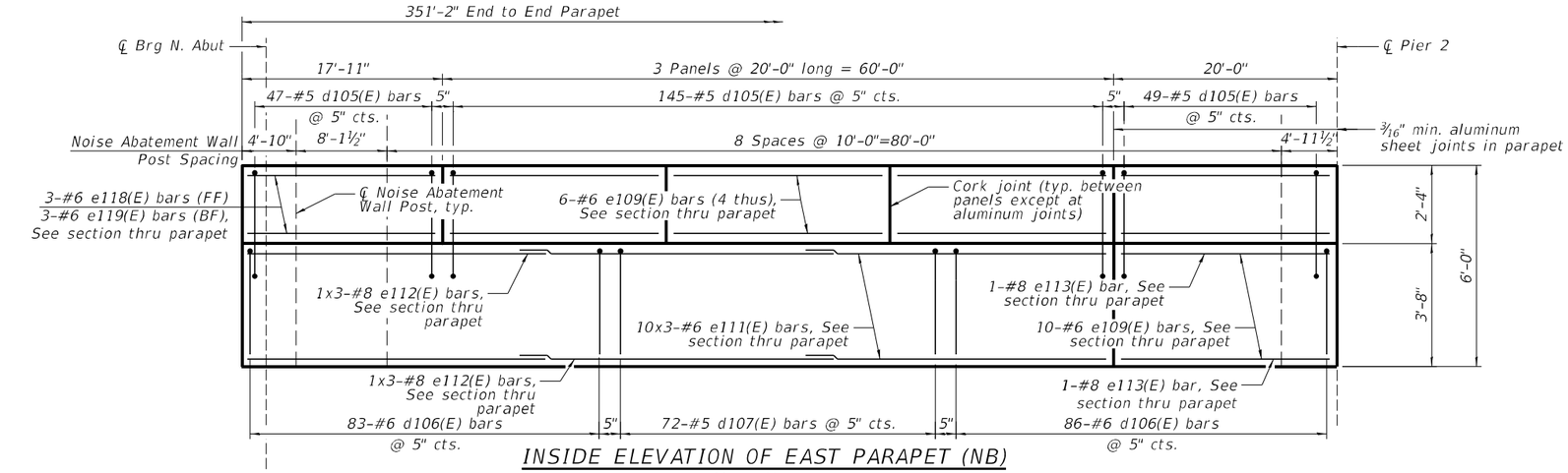

INSIDE ELEVATION OF EAST PARAPET (NB)

(Span 3)

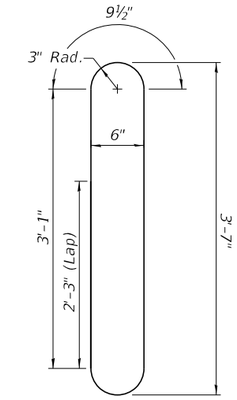

BAR d105(E)

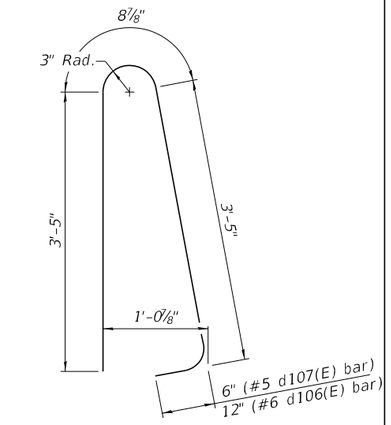

BARS d106(E) & d107(E)

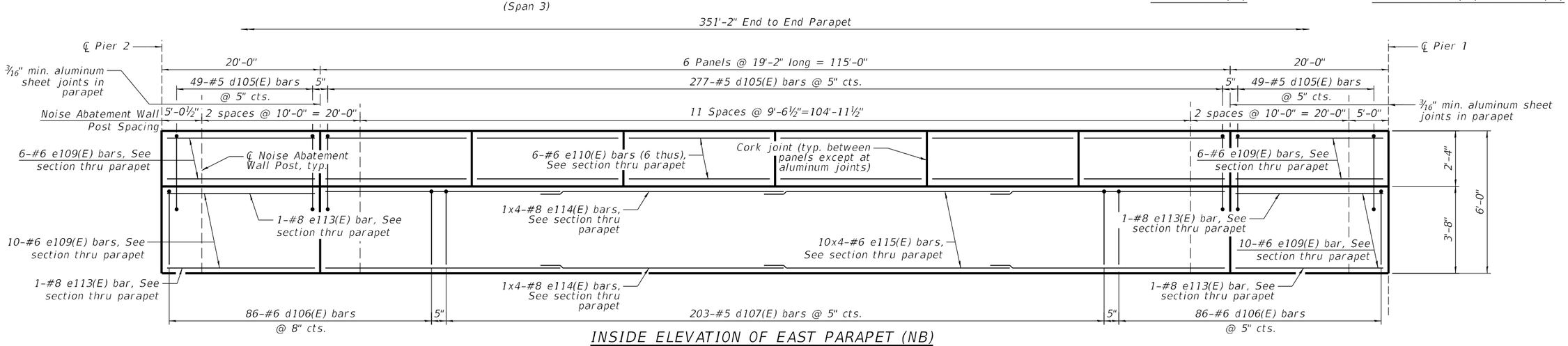

INSIDE ELEVATION OF EAST PARAPET (NB)

(Span 2)

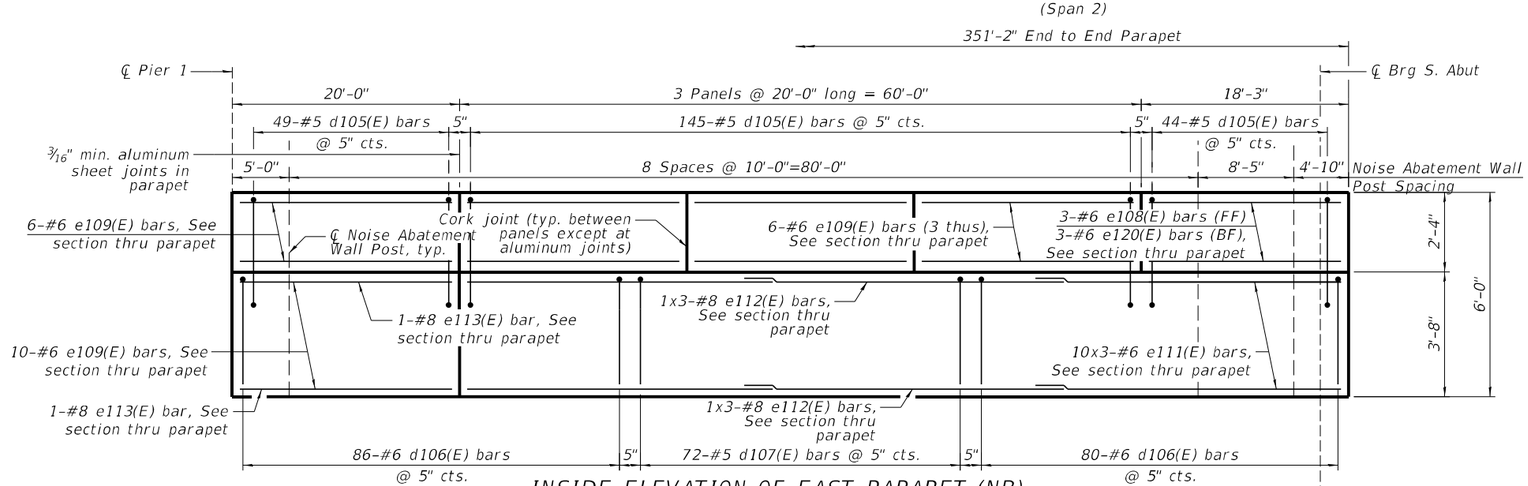

INSIDE ELEVATION OF EAST PARAPET (NB)

(Span 1)

MINIMUM BAR LAP

#6 bar = 5'-0"
#8 bar = 7'-7"

NOTES:

1. Bars indicated thus 4x5-#4 etc. indicates 4 lines of bars with 5 lengths per line.
2. All horizontal dimensions shown are taken at the toe of the parapet.
3. For sections thru parapets, see sheet 42 of 92.

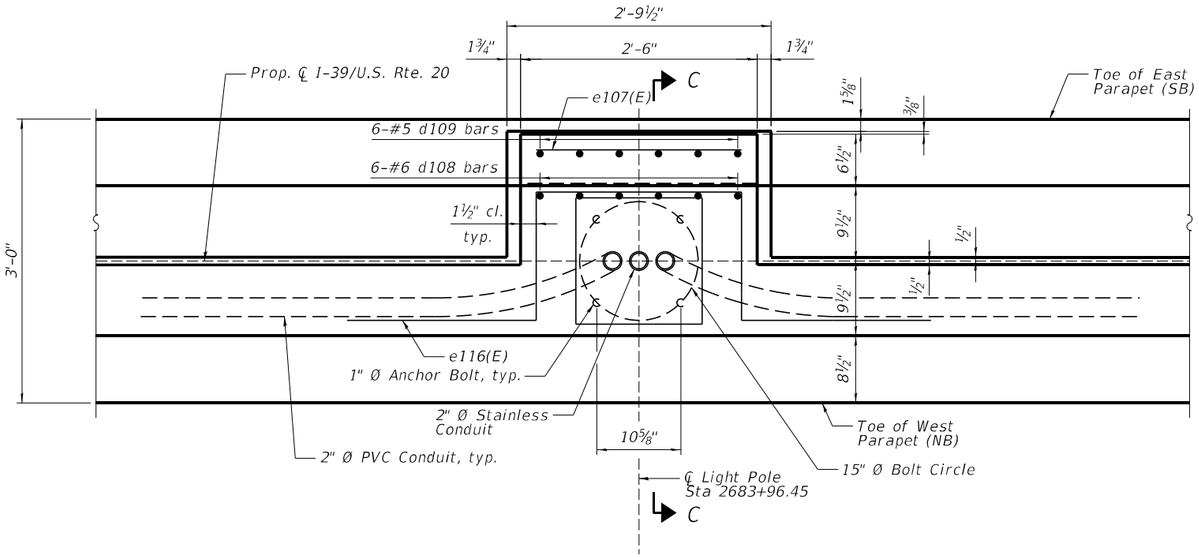

TOP PLAN
(At Light Pole Location)

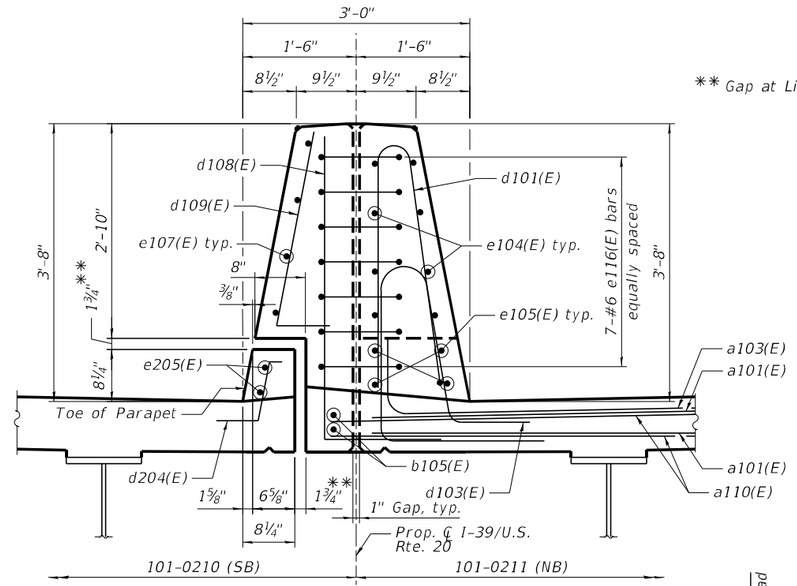

SECTION C-C
(Looking Upstation)
(Light Pole and Conduit not shown for clarity)

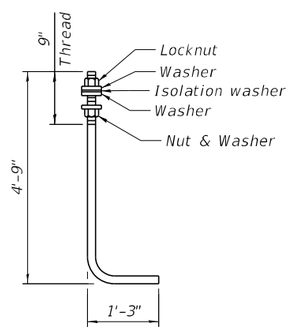

ANCHOR ROD
1" Diameter(ASTM F 1554 Grade 105)
Full length hot dipped galvanized.

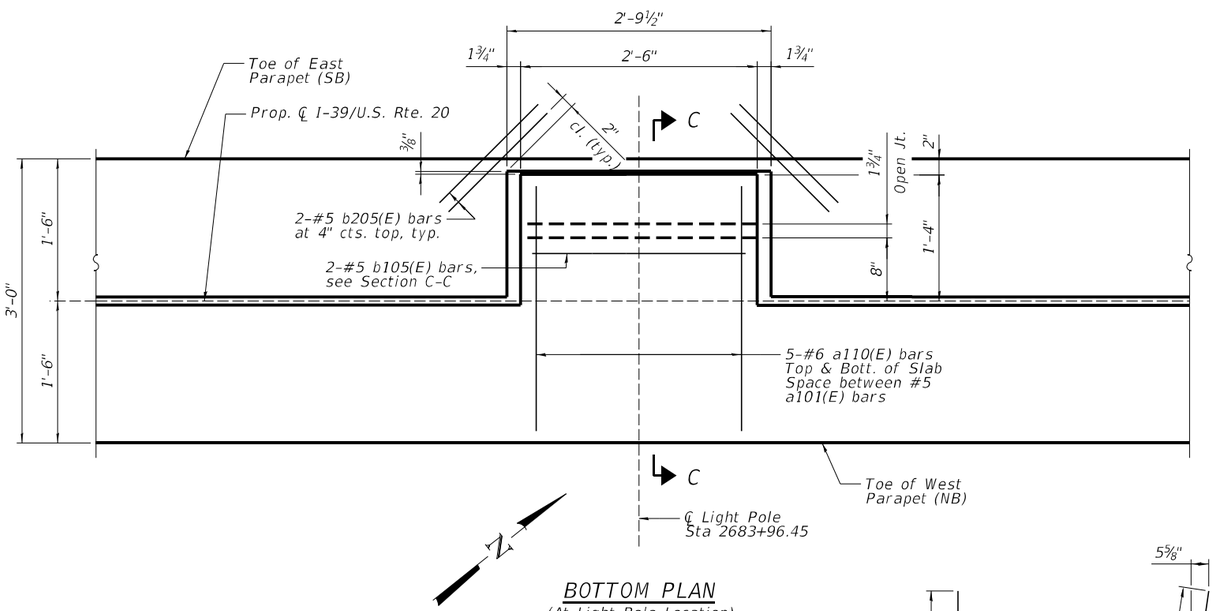

BOTTOM PLAN
(At Light Pole Location)

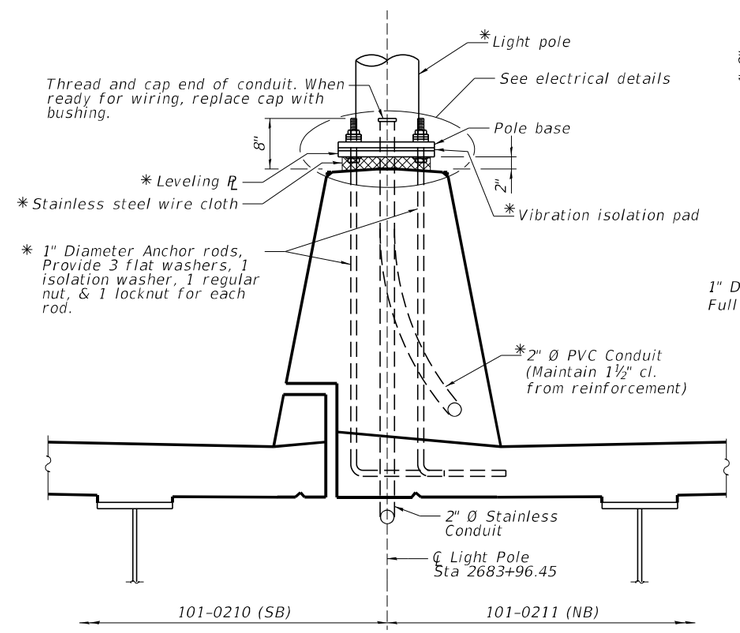

SECTION C-C
(Looking Upstation)
(Showing Light Pole, Anchor Rods & Conduit)

* See electrical plans for Light Pole details and pay items.

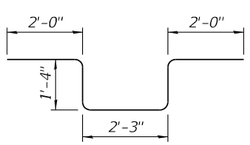

BAR e116(E)

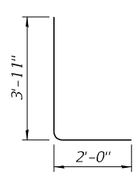

BAR d108(E)

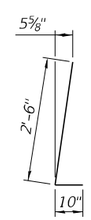

BAR d109(E)

NOTES:
1. See Highway Standard 812001.
2. Cost of anchor rods is included with Concrete Superstructure.

MODEL: sMODELNAMES
FILE NAME: c:\pwworkdir\benesch projects\projects\dms65238\D264C24-1010210_0211-sht-prpdtls1.dgn

benesch
Alfred Benesch & Company
35 W Wacker Drive, Suite 3300
Chicago, Illinois 60601
312-565-0450 Job No. 10800

USER NAME =	DESIGNED - SHK	REVISED -	
	CHECKED - TPS	REVISED -	
PLOT SCALE =	DRAWN - KMS	REVISED -	
PLOT DATE =	CHECKED - TPS	REVISED -	

STATE OF ILLINOIS
DEPARTMENT OF TRANSPORTATION

PARAPET DETAILS (1 OF 3)
STRUCTURE NO. 101-0210 & 101-0211

SHEET 41 OF 92 SHEETS

F.A.I. RTE.	SECTION	COUNTY	TOTAL SHEETS	SHEET NO.
39	(201-3)R & (4-1, 5)R	WINNEBAGO	1685	644
		CONTRACT NO. 64C24		
	ILLINOIS	FED. AID PROJECT		

2/11/2025 9:34:47 AM

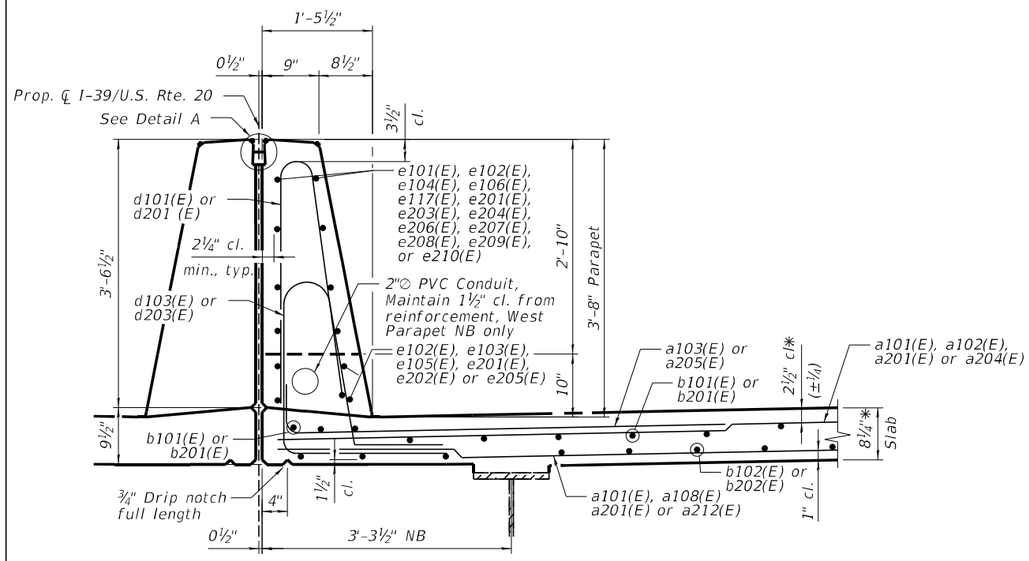

SECTION THRU WEST PARAPET (NB)

(East Parapet (SB) similar)

✱ Prior to grinding

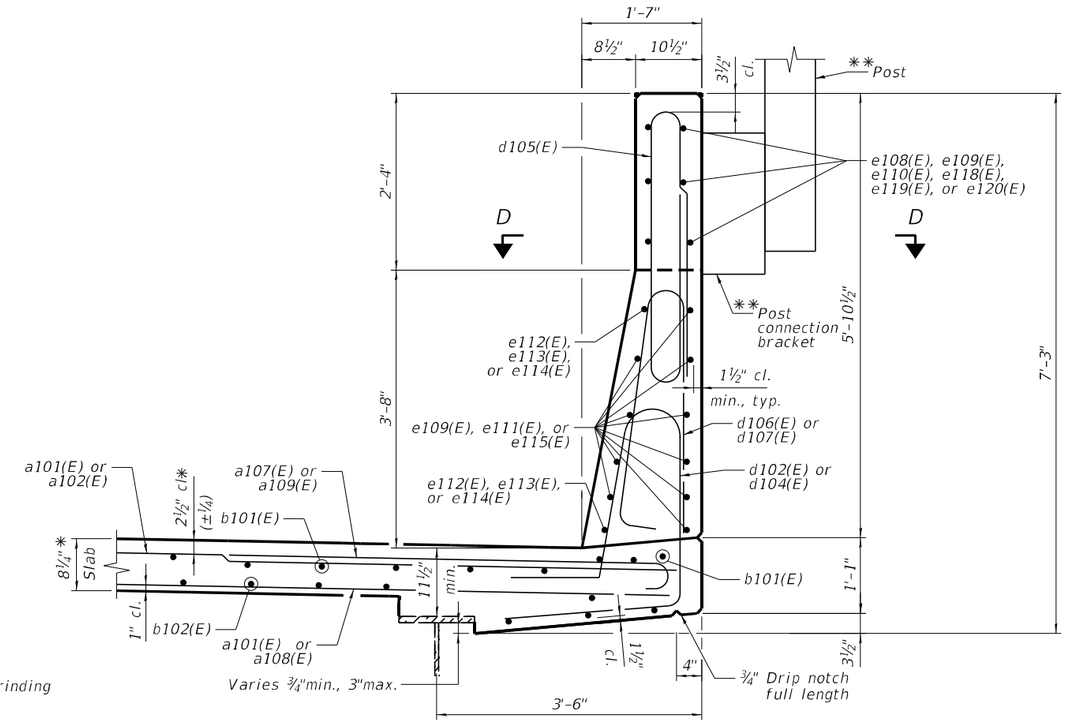

SECTION THRU EAST PARAPET (NB)

✱✱ Shown for information only. See Noise Abatement Wall plans for full details.

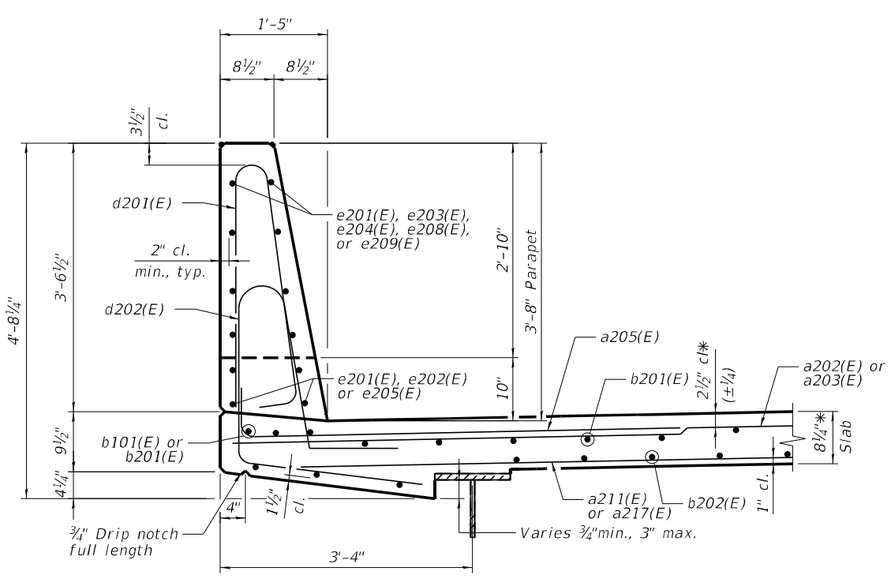

SECTION THRU WEST PARAPET (SB)

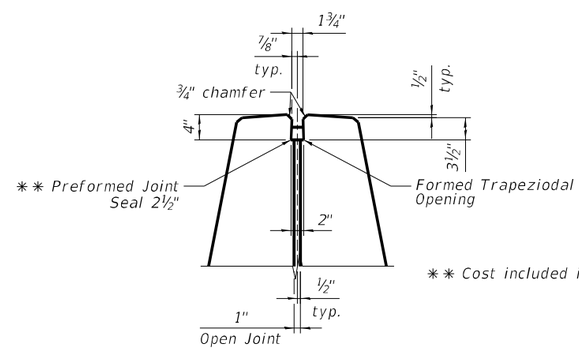

✱✱ Cost included in Concrete Superstructure.

DETAIL A

NOTE:
See sheet 43 of 92 for Section D-D.

MODEL: $MODELNAME$
FILE NAME: c:\pwworkdir\benesch projects\projects\dms65238\D264C24-1010210_0211-sht-prpt-dtls2.dgn

benesch
Alfred Benesch & Company
35 W Wacker Drive, Suite 3300
Chicago, Illinois 60601
312-565-0550 Job No. 10800

USER NAME =	DESIGNED - SHK	REVISED -	
	CHECKED - TPS	REVISED -	
PLOT SCALE =	DRAWN - KMS	REVISED -	
PLOT DATE =	CHECKED - TPS	REVISED -	

STATE OF ILLINOIS
DEPARTMENT OF TRANSPORTATION

PARAPET DETAILS (2 OF 3)
STRUCTURE NO. 101-0210 & 101-0211

SHEET 42 OF 92 SHEETS

F.A.I. RTE.	SECTION	COUNTY	TOTAL SHEETS	SHEET NO.
39	(201-3)R & (4-1, 5)R	WINNEBAGO	1685	645
		CONTRACT NO. 64C24		
		ILLINOIS	FED. AID PROJECT	

2/11/2025 9:34:50 AM

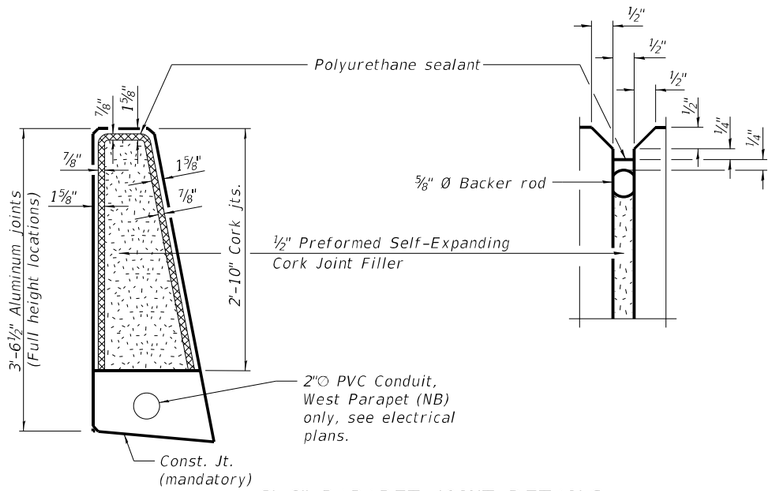

3'-8" PARAPET JOINT DETAILS

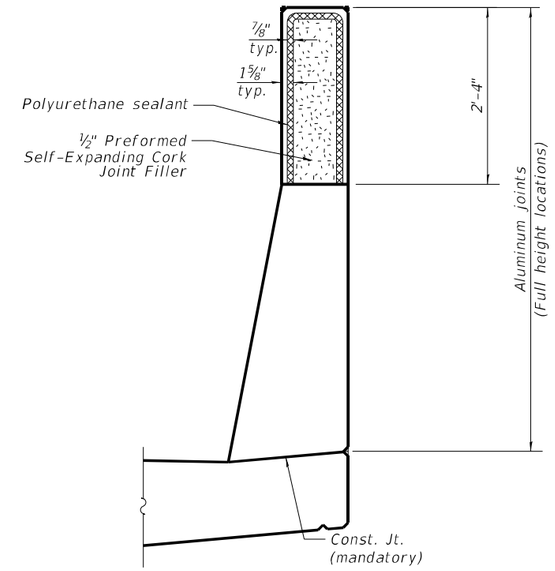

6'-0" PARAPET JOINT DETAILS

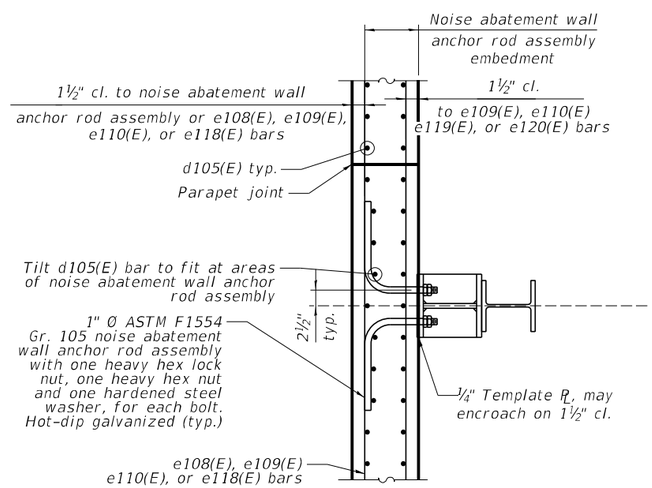

SECTION D-D

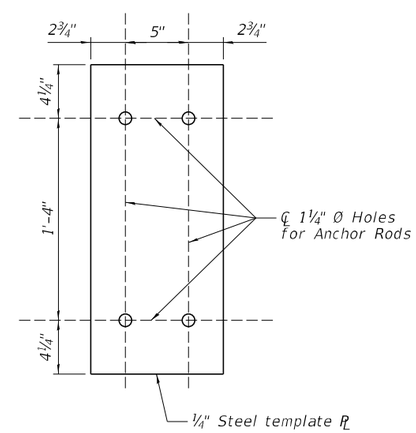

TEMPLATE PLATE FOR NOISE ABATEMENT WALL ANCHOR ROD ASSEMBLY

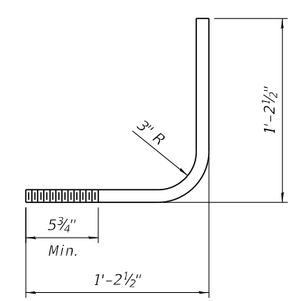

NOISE ABATEMENT WALL ANCHOR ROD ASSEMBLY

NOTES:

1. The 3/16" minimum aluminum sheet shall be ASTM B 209 alloy 3003-H14 and coated with 5 mils of either bitumen paint or epoxy paint to minimize reaction with wet concrete. Cost included with Concrete Superstructure.

2. The polyurethane sealant shall be according to Article 1050.04 of the Std. Spec. and the color shall be gray.

MODEL: sMODELNAMES
FILE NAME: c:\pwworkdir\benesch projects\projects\dms65238\D264C24-1010210_0211-sht-prpt.dgn

benesch
Alfred Benesch & Company
35 W Wacker Drive, Suite 3300
Chicago, Illinois 60601
312-565-0150 Job No. 10800

USER NAME =	DESIGNED - SHK	REVISED -	
	CHECKED - TPS	REVISED -	
PLOT SCALE =	DRAWN - KMS	REVISED -	
PLOT DATE =	CHECKED - TPS	REVISED -	

STATE OF ILLINOIS
DEPARTMENT OF TRANSPORTATION

PARAPET DETAILS (3 OF 3)
STRUCTURE NO. 101-0210 & 101-0211

SHEET 43 OF 92 SHEETS

F.A.I. RTE.	SECTION	COUNTY	TOTAL SHEETS	SHEET NO.
39	(201-3)R & (4-1, 5)R	WINNEBAGO	1685	646
		CONTRACT NO. 64C24		
		ILLINOIS	FED. AID PROJECT	

2/11/2025 9:34:53 AM

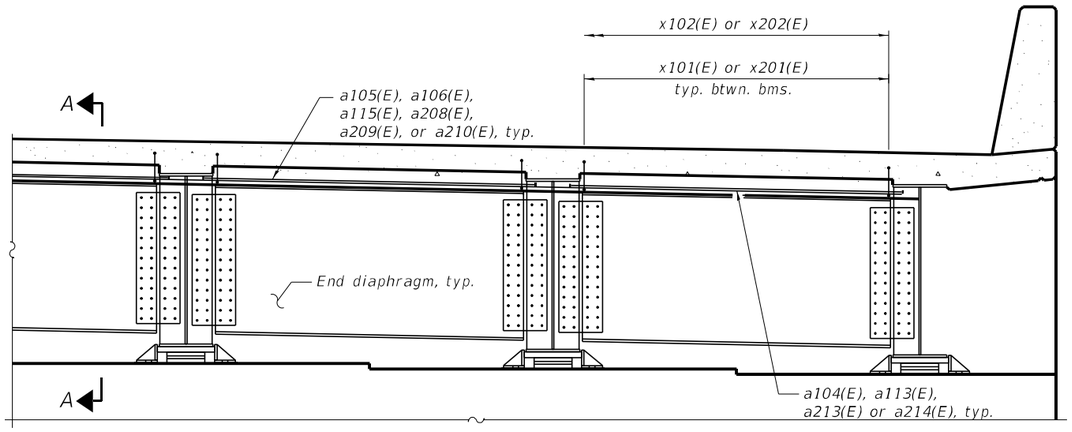

DIAPHRAGM AT SOUTH ABUTMENT

(Looking South)
(Northbound shown, Southbound similar)

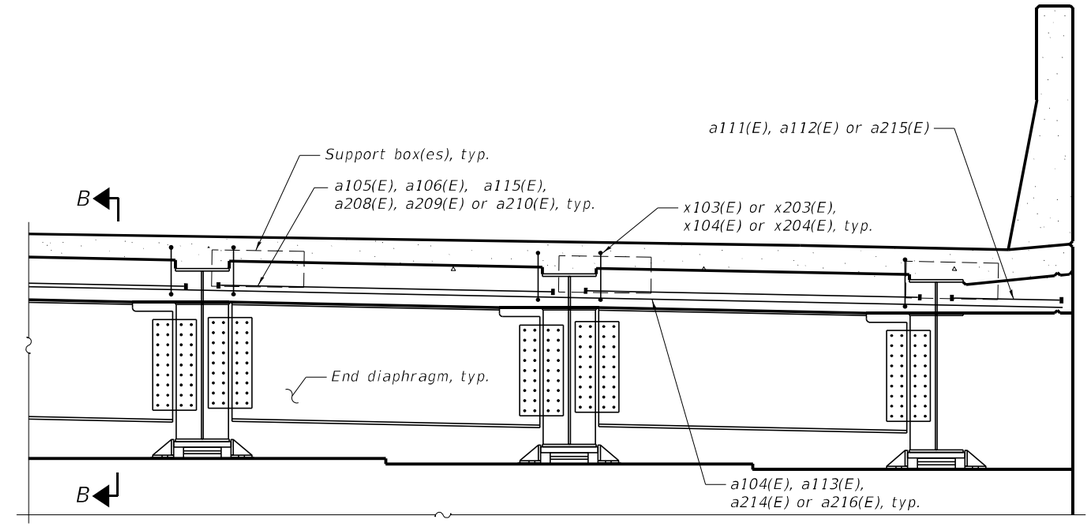

DIAPHRAGM AT NORTH ABUTMENT

(Looking North)
(Northbound shown, Southbound similar)

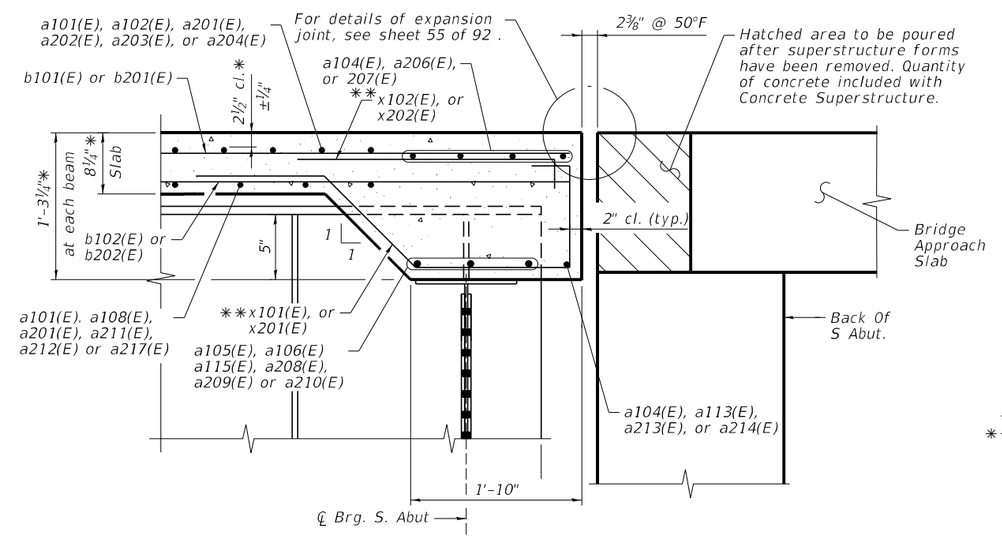

SECTION A-A

(at Rt. Angles)
(Full end diaphragm not
shown for clarity)

✱ Prior to grinding
✱✱ Bars shall be placed parallel to the girders. Spacing for these bars shall be at right angles to the girders.

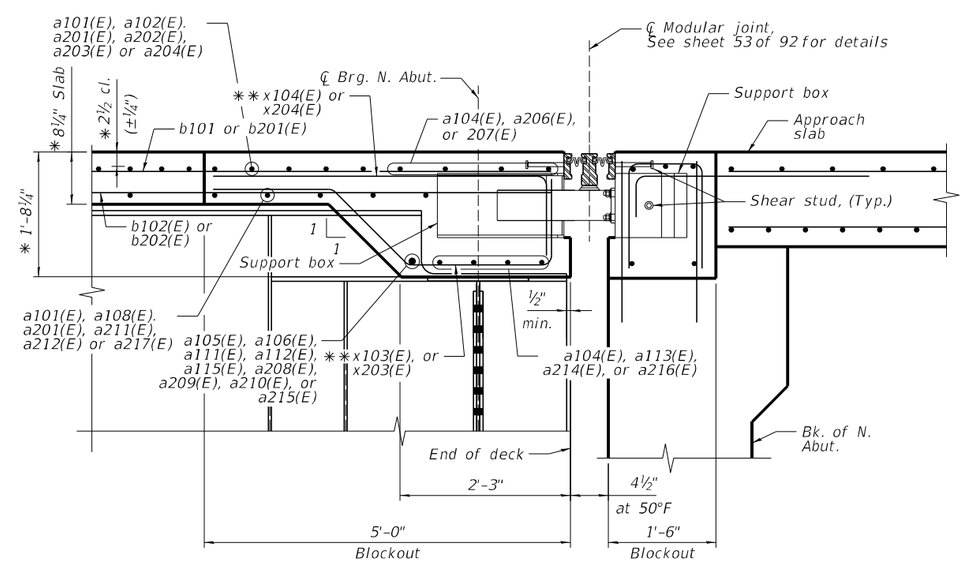

SECTION B-B

Note:
See sheet 45 of 92 for superstructure details and Bill of Material.

MODEL: $MODELNAME$
FILE NAME: c:\pwworkit\benesch projects\projects\dms65238\D264C24-1010210_0211-sht-diaphsxp.dgn

benesch
Alfred Benesch & Company
35 W Wacker Drive, Suite 3300
Chicago, Illinois 60601
312-565-0150 Job No. 10800

USER NAME =	DESIGNED - MFH	REVISED -	
	CHECKED - KMP	REVISED -	
PLOT SCALE =	DRAWN - KMS	REVISED -	
PLOT DATE =	CHECKED - KMP	REVISED -	

STATE OF ILLINOIS
DEPARTMENT OF TRANSPORTATION

DECK DETAILS AT DIAPHRAGMS
STRUCTURE NO. 101-0210 & 101-0211

SHEET 44 OF 92 SHEETS

F.A.I. RTE.	SECTION	COUNTY	TOTAL SHEETS	SHEET NO.
39	(201-3)R & (4-1, 5)R	WINNEBAGO	1685	647
		CONTRACT NO. 64C24		
		ILLINOIS	FED. AID PROJECT	

2/11/2025 9:34:56 AM

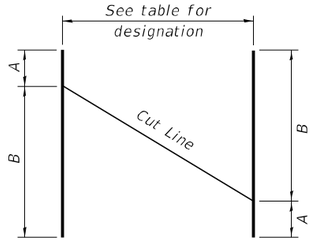

FIELD CUTTING DIAGRAM

Order bars full length. Cut as shown and use remainder of bars in opposite end of deck.

Bar	No.	Size	A	B
a102(E)	246	#5	3'-0"	36'-8"
a108(E)	150	#5	3'-0"	36'-6"
a203(E)	170	#5	3'-0"	50'-1"
a211(E)	102	#5	3'-0"	49'-11"
a204(E)	74	#5	3'-0"	23'-4"
a212(E)	45	#5	3'-0"	23'-1"

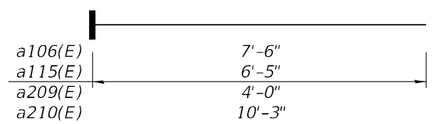

HEADED BARS a106(E), a115(E), a209(E), & 210(E)

(Headed. 16-#7 Bar Terminators)

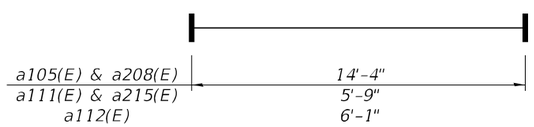

HEADED BARS a105(E), a111(E), a112(E), a208(E) & a215(E)

(Headed. 136-#7 Bar Terminators)

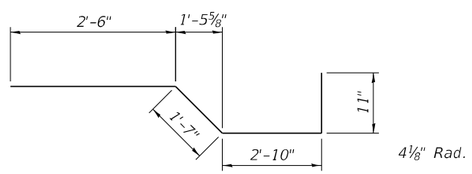

BARS x101(E) & x201(E)

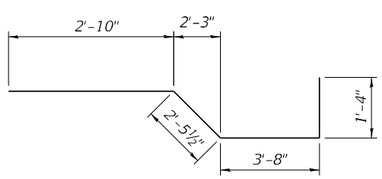

BARS x103(E) & x203(E)

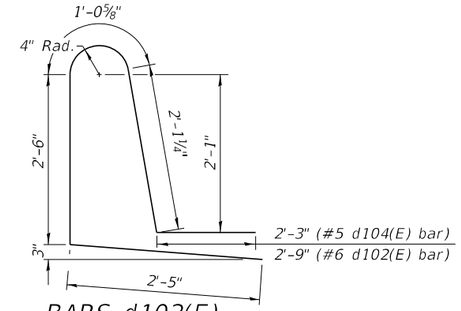

BARS d102(E) & d104(E)

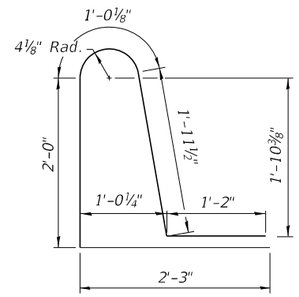

BARS d103(E) & d203(E)

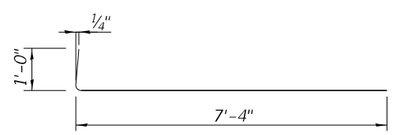

BARS a103(E) & a205(E)

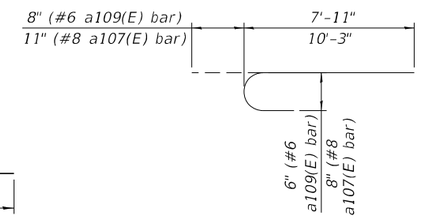

BARS a107(E) & a109(E)

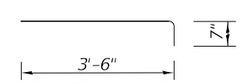

BARS x102(E) & x202(E)

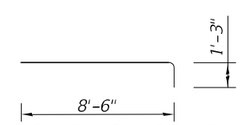

BARS x104(E) & x204(E)

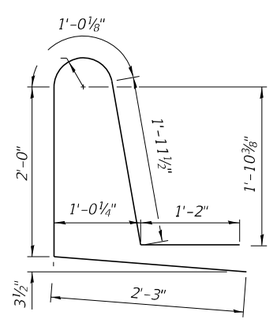

BAR d202(E)

SUPERSTRUCTURE BILL OF MATERIAL NB (SN 101-0211)

Bar	No.	Size	Length	Shape
a101(E)	2044	#5	37'-2"	
a102(E)	246	#5	39'-8"	
a103(E)	740	#6	8'-4"	
a104(E)	42	#7	38'-6"	
a105(E)	32	#7	14'-4"	
a106(E)	4	#7	7'-6"	
a107(E)	473	#8	11'-2"	
a108(E)	150	#5	39'-6"	
a109(E)	347	#6	8'-7"	
a110(E)	10	#6	5'-1"	
a111(E)	1	#7	5'-9"	
a112(E)	1	#7	6'-1"	
a113(E)	10	#7	38'-1"	
a115(E)	4	#7	6'-5"	
b101(E)	624	#5	47'-2"	
b102(E)	483	#5	53'-3"	
b103(E)	140	#6	58'-6"	
b104(E)	140	#6	32'-2"	
b105(E)	2	#5	2'-2"	
d101(E)	533	#5	7'-0"	
d102(E)	507	#6	10'-10"	
d103(E)	527	#5	8'-5"	
d104(E)	347	#5	10'-4"	
d105(E)	854	#5	10'-0"	
d106(E)	507	#6	8'-7"	
d107(E)	347	#5	8'-1"	
d108(E)	6	#6	5'-11"	
d109(E)	6	#5	3'-4"	
e101(E)	8	#4	17'-11"	
e102(E)	100	#4	19'-8"	
e103(E)	24	#4	28'-2"	
e104(E)	48	#4	18'-10"	
e105(E)	20	#4	25'-0"	
e106(E)	4	#4	15'-9"	
e107(E)	4	#4	2'-2"	
e108(E)	3	#6	17'-11"	
e109(E)	100	#6	19'-8"	
e110(E)	36	#6	18'-10"	
e111(E)	60	#6	30'-0"	
e112(E)	12	#8	31'-9"	
e113(E)	8	#8	19'-8"	
e114(E)	8	#8	34'-6"	
e115(E)	40	#6	32'-6"	
e116(E)	7	#6	8'-11"	
e117(E)	4	#4	17'-7"	
e118(E)	3	#6	17'-7"	
e119(E)	3	#6	19'-5"	
e120(E)	3	#6	15'-11"	
x101(E)	72	#5	7'-10"	
x102(E)	70	#5	4'-1"	
x103(E)	80	#5	10'-4"	
x104(E)	72	#5	9'-9"	
Concrete Superstructure			Cu. Yds.	891.3
Protective Coat			Sq. Yd.	3,328
Reinforcement Bars, Epoxy Coated			Lbs.	260,810

SUPERSTRUCTURE BILL OF MATERIAL SB (SN 101-0210)

Bar	No.	Size	Length	Shape
a201(E)	1099	#5	23'-9"	
a202(E)	586	#5	50'-5"	
a203(E)	170	#5	53'-1"	
a204(E)	74	#5	26'-4"	
a205(E)	1480	#6	8'-4"	
a206(E)	16	#7	51'-5"	
a207(E)	8	#7	45'-9"	
a208(E)	32	#7	14'-4"	
a209(E)	4	#7	4'-0"	
a210(E)	4	#7	10'-3"	
a211(E)	102	#5	52'-11"	
a212(E)	45	#5	26'-1"	
a213(E)	1	#7	39'-3"	
a214(E)	10	#7	51'-11"	
a215(E)	2	#7	5'-9"	
a216(E)	4	#7	45'-6"	
a217(E)	359	#5	49'-7"	
b201(E)	632	#5	47'-2"	
b202(E)	483	#5	53'-3"	
b203(E)	142	#6	58'-6"	
b204(E)	142	#6	32'-2"	
b205(E)	4	#5	2'-0"	
d201(E)	1057	#5	7'-0"	
d202(E)	527	#5	8'-5"	
d203(E)	527	#5	8'-5"	
d204(E)	3	#5	1'-10"	
e201(E)	200	#4	19'-8"	
e202(E)	48	#4	28'-2"	
e203(E)	8	#4	18'-0"	
e204(E)	88	#4	18'-10"	
e205(E)	40	#4	25'-0"	
e206(E)	8	#4	5'-4"	
e207(E)	8	#4	10'-3"	
e208(E)	8	#4	17'-7"	
e209(E)	8	#4	15'-11"	
e210(E)	4	#5	19'-5"	
x201(E)	72	#5	7'-10"	
x202(E)	71	#5	4'-1"	
x203(E)	80	#5	10'-4"	
x204(E)	73	#5	9'-9"	
Concrete Superstructure			Cu. Yds.	847.7
Protective Coat			Sq. Yd.	3,218
Reinforcement Bars, Epoxy Coated			Lbs.	220,930

NOTE:
Bar terminators paid for separately. See Total Bill of Materials.

MODEL: SMODELNAMES
FILE NAME: c:\pwworkdir\benesch projects\projects\dms65238\D264C24-1010210_0211-sht-supdet.dgn

benesch
Alfred Benesch & Company
35 W Wacker Drive, Suite 3300
Chicago, Illinois 60601
312-565-0150 Job No. 10800

USER NAME =	DESIGNED - SHK	REVISED -	
	CHECKED - TPS	REVISED -	
PLOT SCALE =	DRAWN - KMS	REVISED -	
PLOT DATE =	CHECKED - TPS	REVISED -	

STATE OF ILLINOIS
DEPARTMENT OF TRANSPORTATION

SUPERSTRUCTURE DETAILS
STRUCTURE NO. 101-0210 & 101-0211

SHEET 45 OF 92 SHEETS

F.A.I. RTE.	SECTION	COUNTY	TOTAL SHEETS	SHEET NO.
39	(201-3)R & (4-1, 5)R	WINNEBAGO	1685	648

CONTRACT NO. 64C24

ILLINOIS | FED. AID PROJECT

2/11/2025 9:34:58 AM

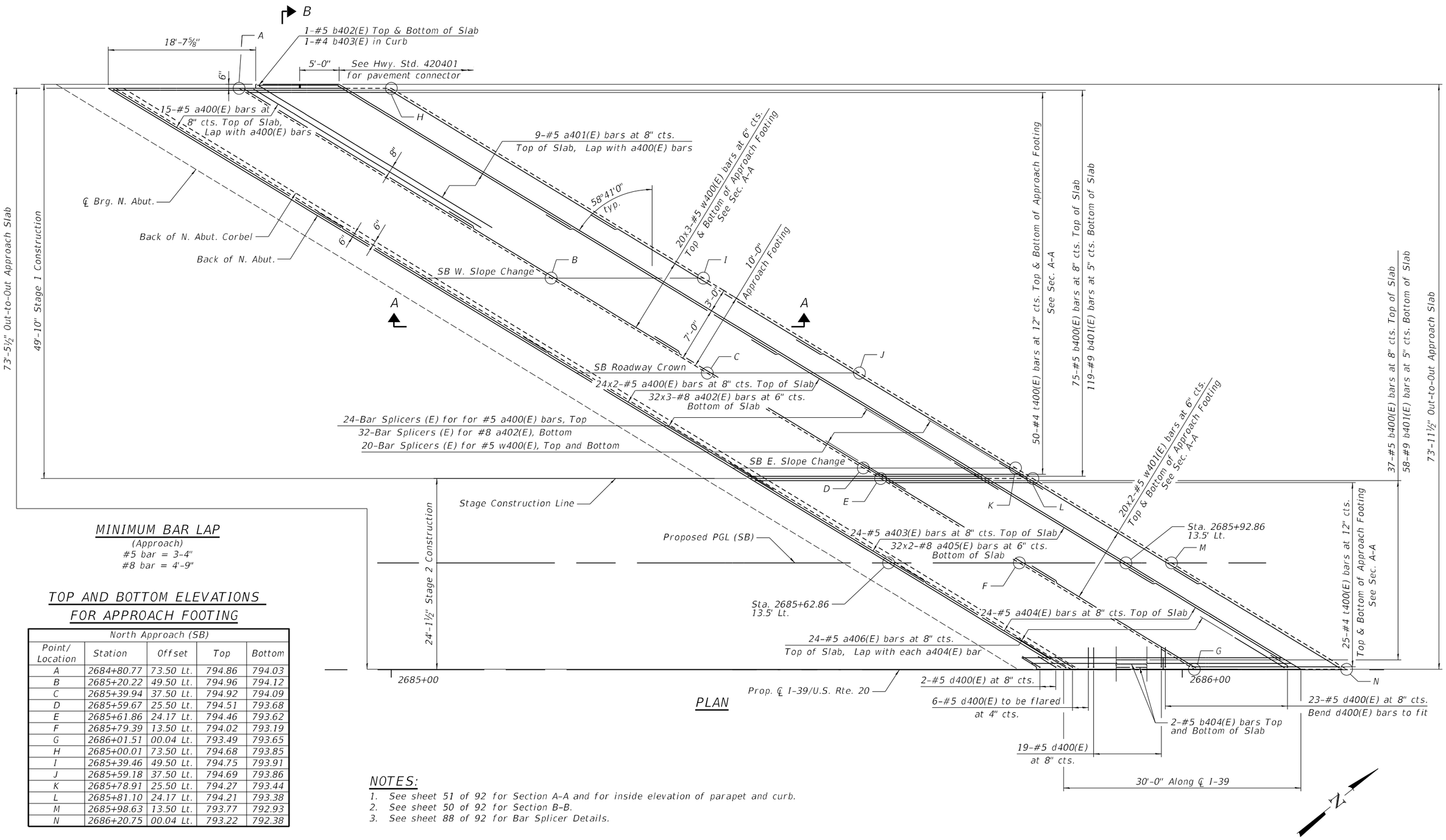

PLAN

MINIMUM BAR LAP

(Approach)
#5 bar = 3-4"
#8 bar = 4'-9"

TOP AND BOTTOM ELEVATIONS FOR APPROACH FOOTING

North Approach (SB)

Point/ Location	Station	Offset	Top	Bottom
A	2684+80.77	73.50 Lt.	794.86	794.03
B	2685+20.22	49.50 Lt.	794.96	794.12
C	2685+39.94	37.50 Lt.	794.92	794.09
D	2685+59.67	25.50 Lt.	794.51	793.68
E	2685+61.86	24.17 Lt.	794.46	793.62
F	2685+79.39	13.50 Lt.	794.02	793.19
G	2686+01.51	00.04 Lt.	793.49	793.65
H	2685+00.01	73.50 Lt.	794.68	793.85
I	2685+39.46	49.50 Lt.	794.75	793.91
J	2685+59.18	37.50 Lt.	794.69	793.86
K	2685+78.91	25.50 Lt.	794.27	793.44
L	2685+81.10	24.17 Lt.	794.21	793.38
M	2685+98.63	13.50 Lt.	793.77	792.93
N	2686+20.75	00.04 Lt.	793.22	792.38

NOTES:

1. See sheet 51 of 92 for Section A-A and for inside elevation of parapet and curb.
2. See sheet 50 of 92 for Section B-B.
3. See sheet 88 of 92 for Bar Splicer Details.

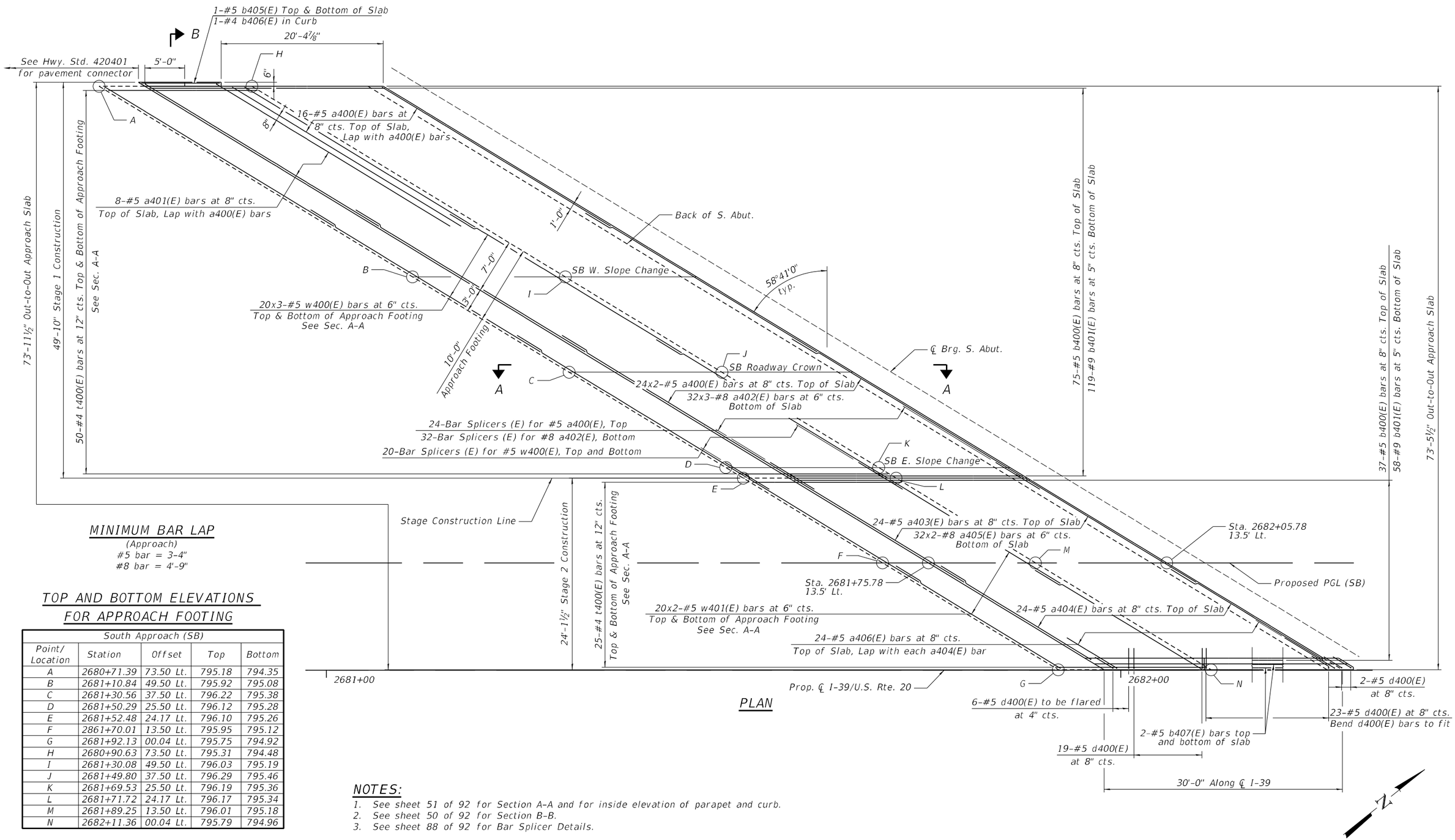

PLAN

MINIMUM BAR LAP

(Approach)
#5 bar = 3-4"
#8 bar = 4'-9"

TOP AND BOTTOM ELEVATIONS FOR APPROACH FOOTING

South Approach (SB)				
Point/ Location	Station	Offset	Top	Bottom
A	2680+71.39	73.50 Lt.	795.18	794.35
B	2681+10.84	49.50 Lt.	795.92	795.08
C	2681+30.56	37.50 Lt.	796.22	795.38
D	2681+50.29	25.50 Lt.	796.12	795.28
E	2681+52.48	24.17 Lt.	796.10	795.26
F	2861+70.01	13.50 Lt.	795.95	795.12
G	2681+92.13	00.04 Lt.	795.75	794.92
H	2680+90.63	73.50 Lt.	795.31	794.48
I	2681+30.08	49.50 Lt.	796.03	795.19
J	2681+49.80	37.50 Lt.	796.29	795.46
K	2681+69.53	25.50 Lt.	796.19	795.36
L	2681+71.72	24.17 Lt.	796.17	795.34
M	2681+89.25	13.50 Lt.	796.01	795.18
N	2682+11.36	00.04 Lt.	795.79	794.96

NOTES:

1. See sheet 51 of 92 for Section A-A and for inside elevation of parapet and curb.
2. See sheet 50 of 92 for Section B-B.
3. See sheet 88 of 92 for Bar Splicer Details.

MODEL: sMODELNAME5
FILE NAME: c:\pwworkh\benesch projects\projects\dms65238\D264C24-1010210_0211-sht-approh2.dgn

benesch
Alfred Benesch & Company
35 W Wacker Drive, Suite 3300
Chicago, Illinois 60601
312-565-0150 Job No. 10800

USER NAME =	DESIGNED - RPC	REVISED -	
	CHECKED - KMP	REVISED -	
PLOT SCALE =	DRAWN - RPC	REVISED -	
PLOT DATE =	CHECKED - KMP	REVISED -	

STATE OF ILLINOIS
DEPARTMENT OF TRANSPORTATION

SOUTH APPROACH SLAB PLAN (SOUTHBOUND)
STRUCTURE NO. 101-0210 & 101-0211

SHEET 47 OF 92 SHEETS

F.A.I. RTE.	SECTION	COUNTY	TOTAL SHEETS	SHEET NO.
39	(201-3)R & (4-1, 5)R	WINNEBAGO	1685	650
		CONTRACT NO. 64C24		
		ILLINOIS	FED. AID PROJECT	

2/11/2025 9:35:05 AM

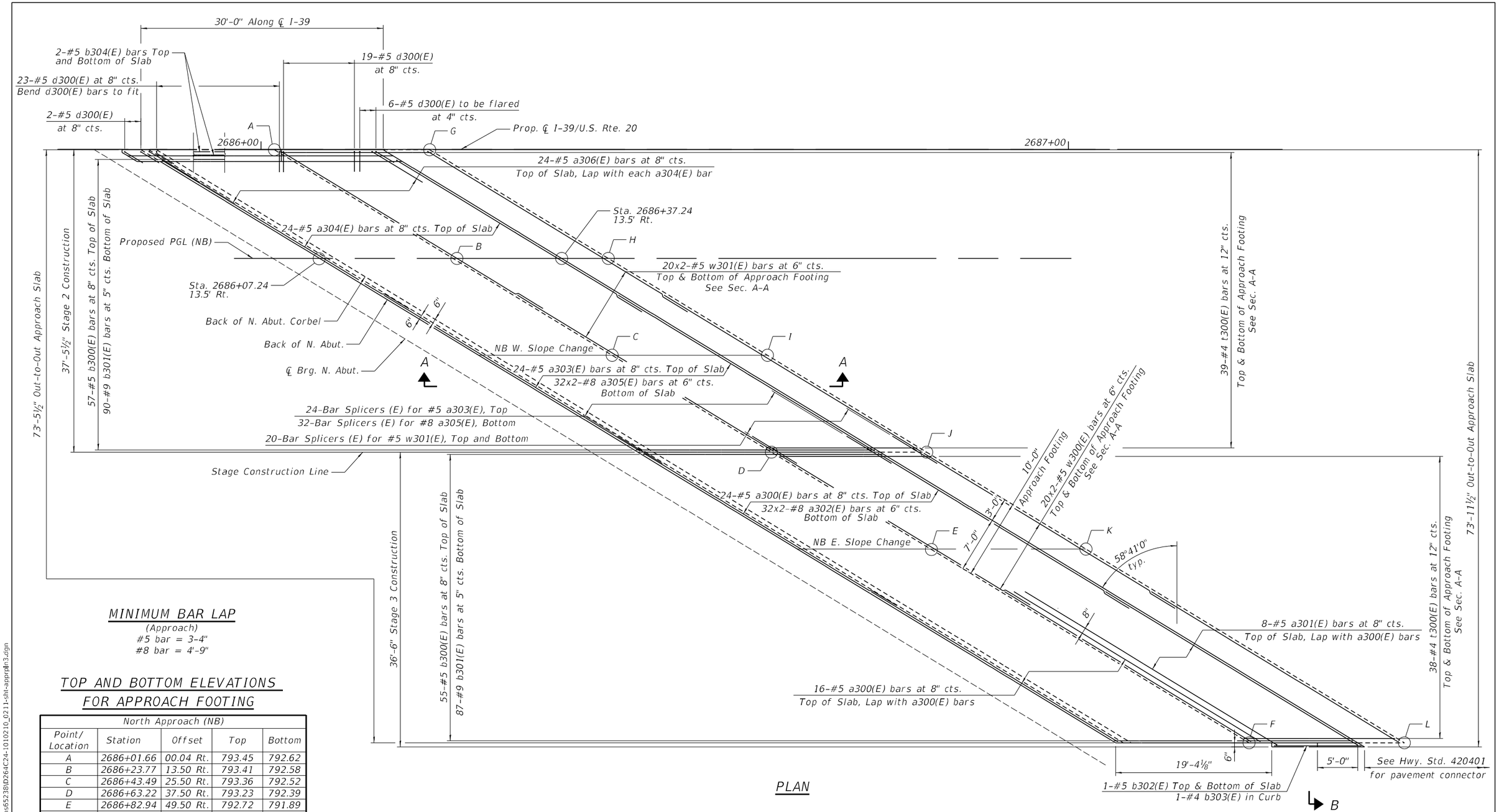

PLAN

MINIMUM BAR LAP

(Approach)
#5 bar = 3'-4"
#8 bar = 4'-9"

TOP AND BOTTOM ELEVATIONS FOR APPROACH FOOTING

North Approach (NB)				
Point/ Location	Station	Offset	Top	Bottom
A	2686+01.66	00.04 Rt.	793.45	792.62
B	2686+23.77	13.50 Rt.	793.41	792.58
C	2686+43.49	25.50 Rt.	793.36	792.52
D	2686+63.22	37.50 Rt.	793.23	792.39
E	2686+82.94	49.50 Rt.	792.72	791.89
F	6287+22.39	73.50 Rt.	791.53	790.70
G	2686+20.90	00.04 Rt.	793.18	792.35
H	2686+43.01	13.50 Rt.	793.12	792.29
I	2686+62.73	25.50 Rt.	793.05	792.21
J	2686+82.46	37.50 Rt.	792.90	792.07
K	2687+02.18	49.50 Rt.	792.38	791.54
L	2867+41.63	73.50 Rt.	791.17	790.34

NOTES:

1. See sheet 51 of 92 for Section A-A and for inside elevation of parapet and curb.
2. See sheet 50 of 92 for Section B-B.
3. See sheet 88 of 92 for Bar Splicer Details.

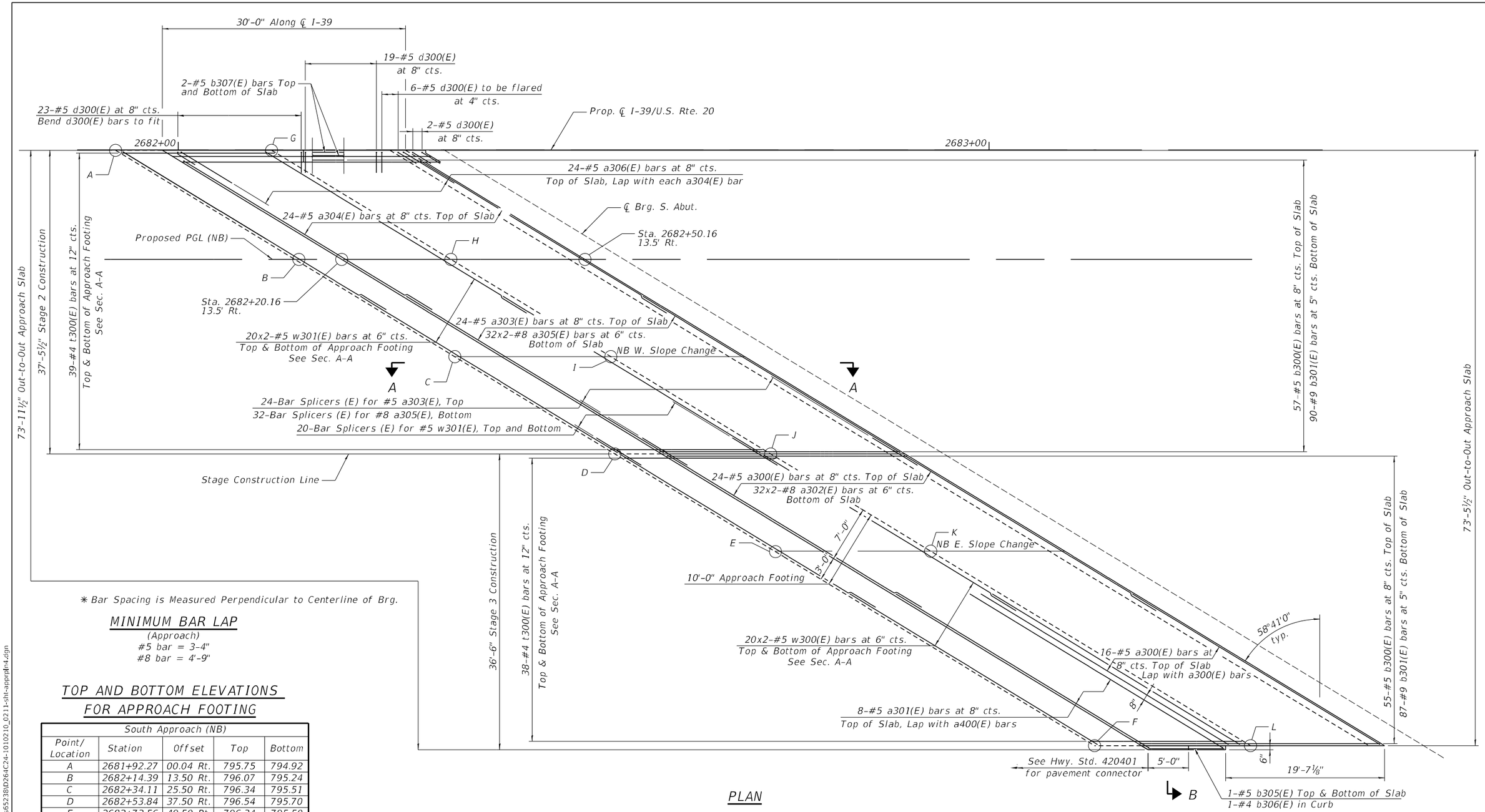

✱ Bar Spacing is Measured Perpendicular to Centerline of Brg.

MINIMUM BAR LAP

(Approach)
#5 bar = 3'-4"
#8 bar = 4'-9"

TOP AND BOTTOM ELEVATIONS FOR APPROACH FOOTING

South Approach (NB)				
Point/ Location	Station	Offset	Top	Bottom
A	2681+92.27	00.04 Rt.	795.75	794.92
B	2682+14.39	13.50 Rt.	796.07	795.24
C	2682+34.11	25.50 Rt.	796.34	795.51
D	2682+53.84	37.50 Rt.	796.54	795.70
E	2682+73.56	49.50 Rt.	796.34	795.50
F	6283+13.01	73.50 Rt.	795.81	794.97
G	2682+11.51	00.04 Rt.	795.80	794.97
H	2682+33.63	13.50 Rt.	796.10	795.27
I	2682+53.35	25.50 Rt.	796.34	795.51
J	2682+73.08	37.50 Rt.	796.52	795.68
K	2682+92.80	49.50 Rt.	796.32	795.49
L	2863+32.25	73.50 Rt.	795.76	794.92

PLAN

NOTES:

1. See sheet 51 of 92 for Section A-A and for inside elevation of parapet and curb.
2. See sheet 50 of 92 for Section B-B.
3. See sheet 88 of 92 for Bar Splicer Details.

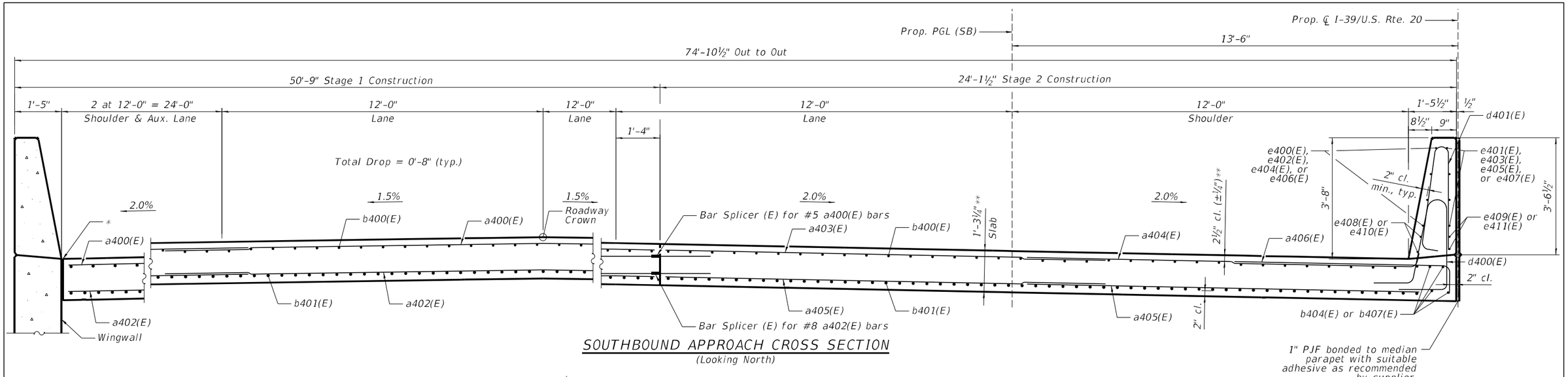

SOUTHBOUND APPROACH CROSS SECTION

(Looking North)

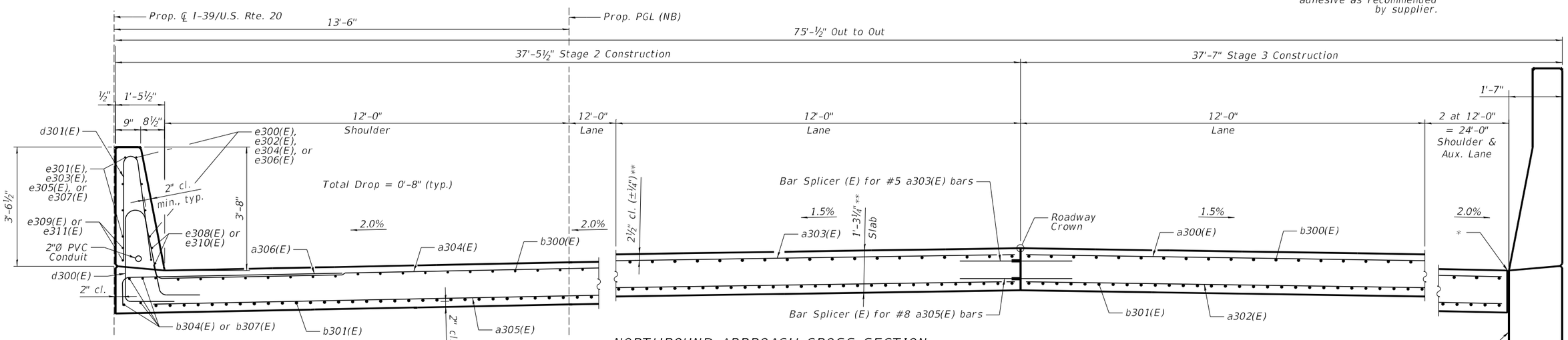

NORTHBOUND APPROACH CROSS SECTION

(Looking North)

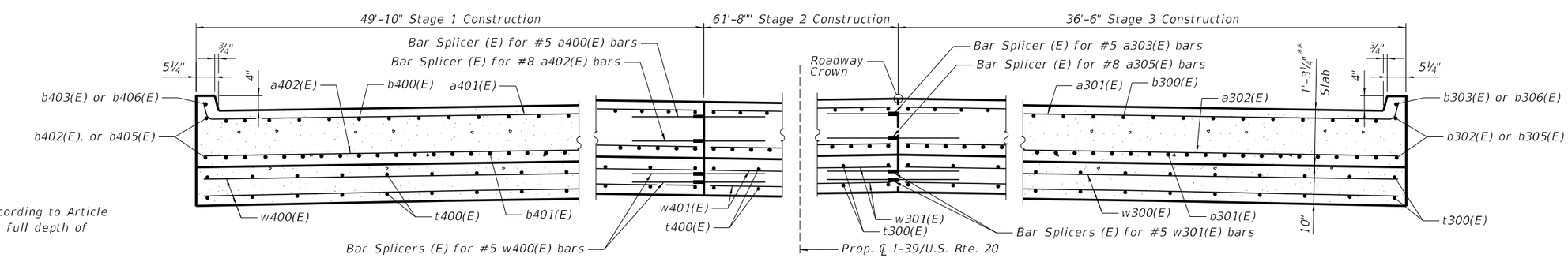

SECTION B-B

(Section thru curb & approach footing)

* ½" Preformed Expansion Joint Filler according to Article 1051.09 of the Standard Specifications; full depth of slab, full length of parapet.

** Prior to grinding

MODEL: $MODELNAMES
FILE NAME: c:\pwworkdir\benesch projects\projects\dms65238\D264C24-1010210_0211-sht-apprdtls1.dgn

2/11/2025 9:35:14 AM

benesch
Alfred Benesch & Company
35 W Wacker Drive, Suite 3300
Chicago, Illinois 60601
312/565-0450 Job No. 10800

USER NAME =	DESIGNED - RPC	REVISED -	
	CHECKED - KMP	REVISED -	
PLOT SCALE =	DRAWN - RPC	REVISED -	
PLOT DATE =	CHECKED - KMP	REVISED -	

STATE OF ILLINOIS
DEPARTMENT OF TRANSPORTATION

APPROACH SLAB DETAILS (1 OF 3)
STRUCTURE NO. 101-0210 & 101-0211

SHEET 50 OF 92 SHEETS

F.A.I. RTE.	SECTION	COUNTY	TOTAL SHEETS	SHEET NO.
39	(201-3)R & (4-1, 5)R	WINNEBAGO	1685	653
		CONTRACT NO. 64C24		
		ILLINOIS	FED. AID PROJECT	

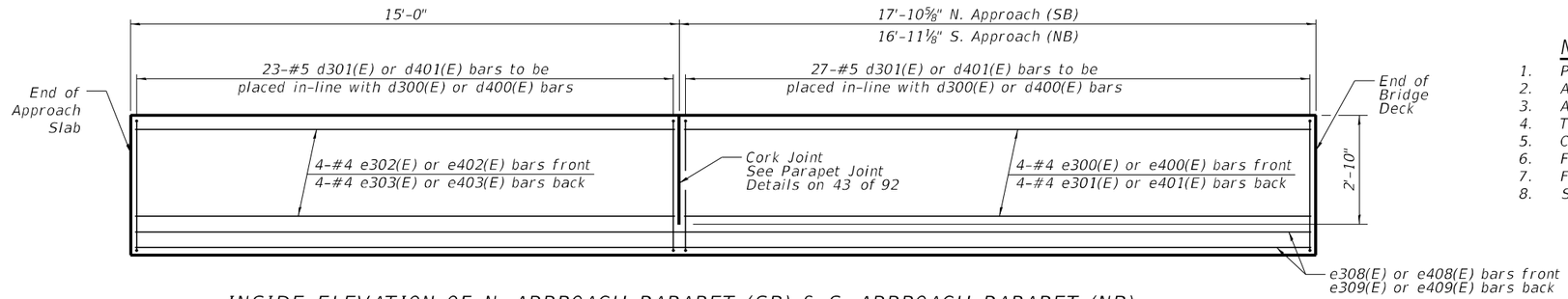

INSIDE ELEVATION OF N. APPROACH PARAPET (SB) & S. APPROACH PARAPET (NB)

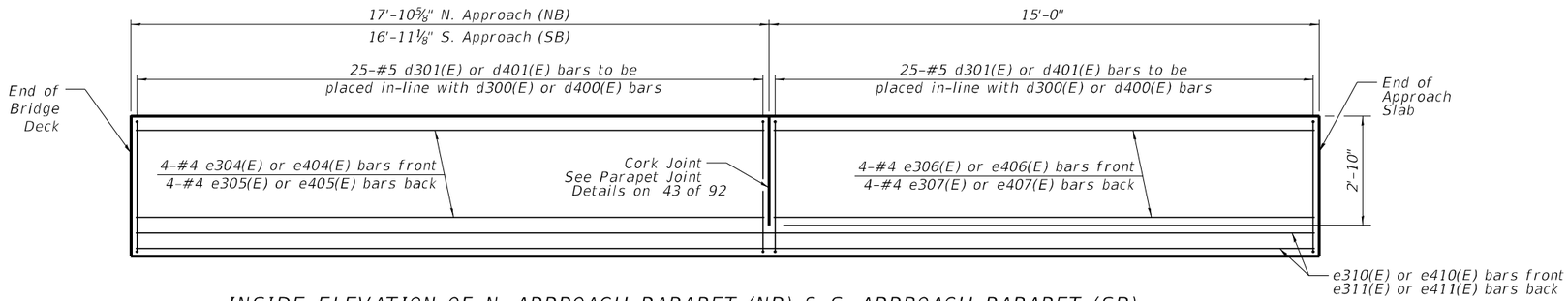

INSIDE ELEVATION OF N. APPROACH PARAPET (NB) & S. APPROACH PARAPET (SB)

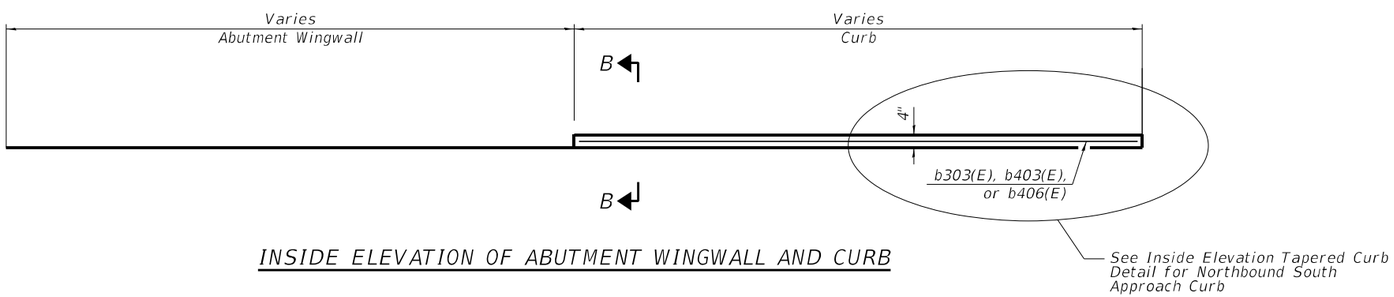

INSIDE ELEVATION OF ABUTMENT WINGWALL AND CURB

NOTES:

1. Parapet concrete shall be paid for as Concrete Superstructure.
2. Approach slab shall be paid for as Concrete Superstructure (Approach Slab).
3. Approach footing concrete shall be paid for as Concrete Structures.
4. The approach footing maximum applied service bearing pressure (Qmax) = 2.0 ksf.
5. Cost of excavation for approach footing included with Concrete Structures.
6. For Granular Backfill for Structures and drainage treatment details, see sheet 3 of 92 .
7. For Section B-B see Sheet 50 of 92 .
8. See Sheet 88 of 92 for Bar Splicer Details.

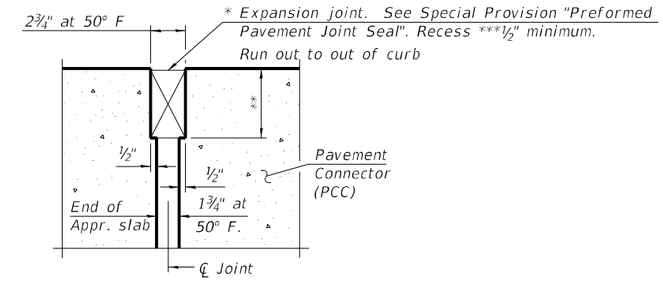

DETAIL A

* Cost included with Concrete Superstructure (Approach Slab).

** Per manufacturer recommendations

*** Prior to grinding

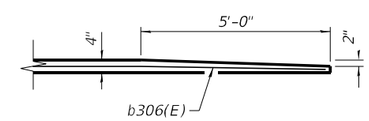

INSIDE ELEVATION TAPERED CURB DETAIL
(NB South Approach Curb)

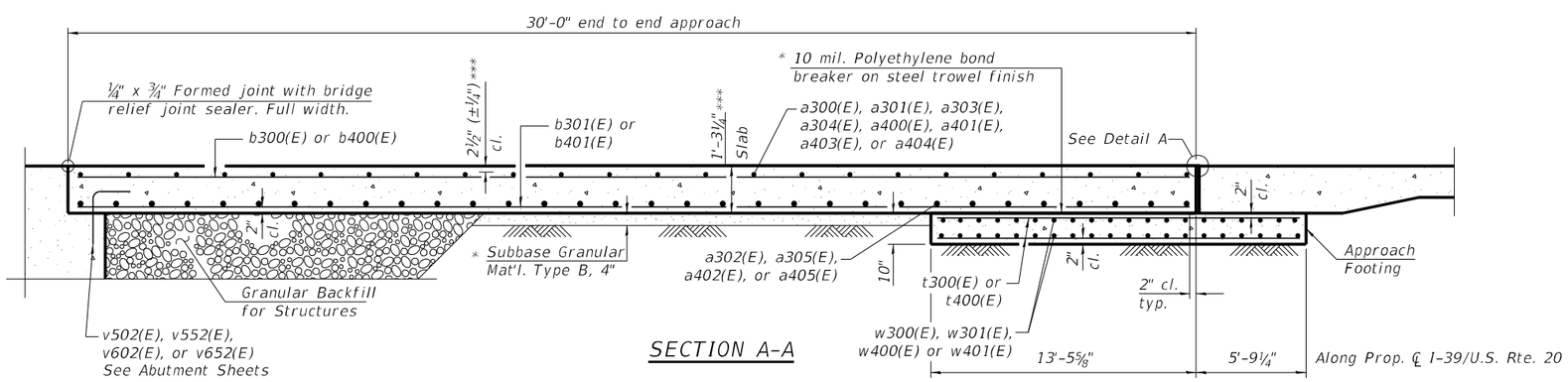

SECTION A-A

MODEL: $MODELNAME$
FILE NAME: c:\pwworkdir\benesch projects\projects\dms65238\D264C24-1010210_0211-sht-approdtls2.dgn

benesch
Alfred Benesch & Company
35 W Wacker Drive, Suite 3300
Chicago, Illinois 60601
312-969-0450 Job No. 10800

USER NAME =	DESIGNED - RPC	REVISED -	
	CHECKED - KMP	REVISED -	
PLOT SCALE =	DRAWN - RPC	REVISED -	
PLOT DATE =	CHECKED - KMP	REVISED -	

STATE OF ILLINOIS
DEPARTMENT OF TRANSPORTATION

APPROACH SLAB DETAILS (2 OF 3)
STRUCTURE NO. 101-0210 & 101-0211

SHEET 51 OF 92 SHEETS

F.A.I. RTE.	SECTION	COUNTY	TOTAL SHEETS	SHEET NO.
39	(201-3)R & (4-1, 5)R	WINNEBAGO	1685	654
		CONTRACT NO. 64C24		
		ILLINOIS	FED. AID PROJECT	

2/11/2025 9:35:16 AM

NORTH APPROACH BILL OF MATERIAL NB (SN 101-0211)

Bar	No.	Size	Length	Shape
a300(E)	40	#5	36'-8"	
a301(E)	8	#5	37'-2"	
a302(E)	64	#8	37'-5"	
a303(E)	24	#5	37'-7"	
a304(E)	24	#5	38'-1"	
a305(E)	64	#8	38'-4"	
a306(E)	24	#5	7'-4"	
b300(E)	112	#5	29'-8"	
b301(E)	177	#9	29'-8"	
b302(E)	2	#5	10'-7"	
b303(E)	1	#4	10'-7"	
b304(E)	4	#5	31'-8"	
d300(E)	50	#5	8'-6"	
d301(E)	50	#5	7'-0"	
e304(E)	4	#4	17'-9"	
e305(E)	4	#4	19'-4"	
e306(E)	4	#4	14'-4"	
e307(E)	4	#4	12'-3"	
e310(E)	2	#4	32'-5"	
e311(E)	2	#4	31'-11"	
t300(E)	154	#4	18'-11"	
w300(E)	80	#5	36'-2"	
w301(E)	80	#5	37'-7"	
Concrete Superstructure			Cu. Yd.	4.9
Protective Coat			Sq. Yd.	258
Concrete Superstructure (Approach Slab)			Cu. Yd.	104.2
Concrete Structures			Cu. Yd.	43.7
Reinforcement Bars, Epoxy Coated			Pound	47510

NORTH APPROACH BILL OF MATERIAL SB (SN 101-0210)

Bar	No.	Size	Length	Shape
a400(E)	63	#5	34'-2"	
a401(E)	9	#5	34'-8"	
a402(E)	96	#8	35'-1"	
a403(E)	24	#5	24'-9"	
a404(E)	24	#5	25'-3"	
a405(E)	64	#8	25'-6"	
a406(E)	24	#5	7'-4"	
b400(E)	112	#5	29'-8"	
b401(E)	177	#9	29'-8"	
b402(E)	2	#5	10'-2"	
b403(E)	1	#4	10'-2"	
b404(E)	4	#5	31'-8"	
d400(E)	50	#5	8'-6"	
d401(E)	50	#5	7'-0"	
e400(E)	4	#4	17'-2"	
e401(E)	4	#4	15'-8"	
e402(E)	4	#4	14'-11"	
e403(E)	4	#4	16'-8"	
e408(E)	2	#4	32'-5"	
e409(E)	2	#4	32'-8"	
t400(E)	150	#4	18'-11"	
w400(E)	120	#5	33'-10"	
w401(E)	80	#5	24'-9"	
Concrete Superstructure			Cu. Yd.	4.9
Protective Coat			Sq. Yd.	258
Concrete Superstructure (Approach Slab)			Cu. Yd.	104.2
Concrete Structures			Cu. Yd.	43.7
Reinforcement Bars, Epoxy Coated			Pound	48100

SOUTH APPROACH BILL OF MATERIAL NB (SN 101-0211)

Bar	No.	Size	Length	Shape
a300(E)	40	#5	36'-8"	
a301(E)	8	#5	37'-2"	
a302(E)	64	#8	37'-5"	
a303(E)	24	#5	37'-7"	
a304(E)	24	#5	38'-1"	
a305(E)	64	#8	38'-4"	
a306(E)	24	#5	7'-4"	
b300(E)	112	#5	29'-8"	
b301(E)	177	#9	29'-8"	
b305(E)	2	#5	9'-3"	
b306(E)	1	#4	9'-3"	
b307(E)	4	#5	31'-2"	
d300(E)	50	#5	8'-6"	
d301(E)	50	#5	7'-0"	
e300(E)	4	#4	16'-3"	
e301(E)	4	#4	14'-8"	
e302(E)	4	#4	14'-11"	
e303(E)	4	#4	16'-9"	
e308(E)	2	#4	31'-6"	
e309(E)	2	#4	31'-9"	
t300(E)	154	#4	18'-11"	
w300(E)	80	#5	36'-2"	
w301(E)	80	#5	37'-7"	
Concrete Superstructure			Cu. Yd.	4.7
Protective Coat			Sq. Yd.	257
Concrete Superstructure (Approach Slab)			Cu. Yd.	104.1
Concrete Structures			Cu. Yd.	43.7
Reinforcement Bars, Epoxy Coated			Pound	47500

SOUTH APPROACH BILL OF MATERIAL SB (SN 101-0210)

Bar	No.	Size	Length	Shape
a400(E)	64	#5	34'-2"	
a401(E)	8	#5	34'-8"	
a402(E)	96	#8	35'-1"	
a403(E)	24	#5	24'-9"	
a404(E)	24	#5	25'-3"	
a405(E)	64	#8	25'-6"	
a406(E)	24	#5	7'-4"	
b400(E)	112	#5	29'-8"	
b401(E)	177	#9	29'-8"	
b405(E)	2	#5	9'-3"	
b406(E)	1	#4	9'-3"	
b407(E)	4	#5	31'-2"	
d400(E)	50	#5	8'-6"	
d401(E)	50	#5	7'-0"	
e404(E)	4	#4	16'-8"	
e405(E)	4	#4	18'-5"	
e406(E)	4	#4	14'-4"	
e407(E)	4	#4	12'-6"	
e410(E)	2	#4	31'-4"	
e411(E)	2	#4	31'-3"	
t400(E)	150	#4	18'-11"	
w400(E)	120	#5	33'-10"	
w401(E)	80	#5	24'-9"	
Concrete Superstructure			Cu. Yd.	4.7
Protective Coat			Sq. Yd.	257
Concrete Superstructure (Approach Slab)			Cu. Yd.	104.1
Concrete Structures			Cu. Yd.	43.7
Reinforcement Bars, Epoxy Coated			Pound	48090

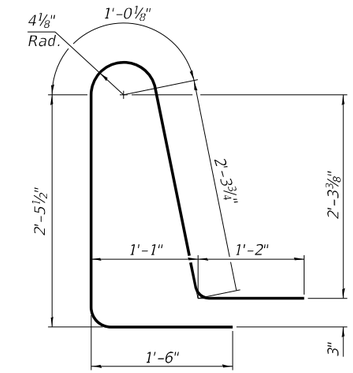

BAR d300(E) & d400(E)

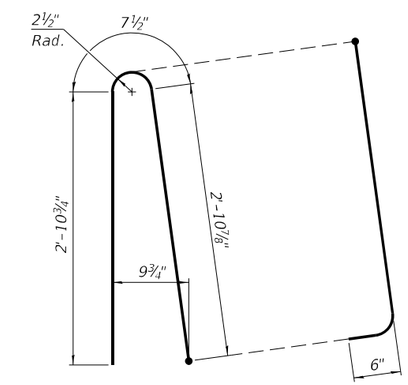

BAR d301(E)

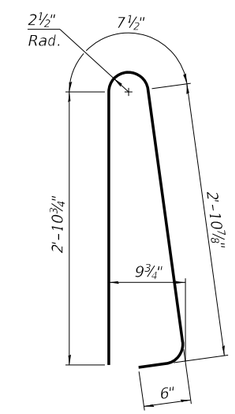

BAR d401(E)

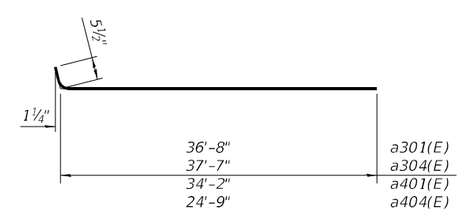

BARS a301(E), a304(E), a401(E), & a404(E)

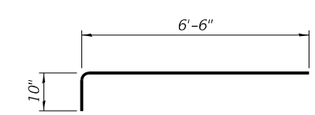

BAR a306(E) & a406(E)

MODEL: sMODELNAMES
FILE NAME: c:\pwworking\benesch projects\projects\dms65238\D264C24-1010210_0211-sht-approtls3.dgn

benesch
Alfred Benesch & Company
35 W Wacker Drive, Suite 3300
Chicago, Illinois 60601
3126960450 Job No. 10800

USER NAME =	DESIGNED - RPC	REVISED -	
	CHECKED - KMP	REVISED -	
PLOT SCALE =	DRAWN - RPC	REVISED -	
PLOT DATE =	CHECKED - KMP	REVISED -	

STATE OF ILLINOIS
DEPARTMENT OF TRANSPORTATION

APPROACH SLAB DETAILS (3 OF 3)
STRUCTURE NO. 101-0210 & 101-0211

SHEET 52 OF 92 SHEETS

F.A.I. RTE.	SECTION	COUNTY	TOTAL SHEETS	SHEET NO.
39	(201-3)R & (4-1, 5)R	WINNEBAGO	1685	655

CONTRACT NO. 64C24

ILLINOIS | FED. AID PROJECT

2/11/2025 9:35:19 AM

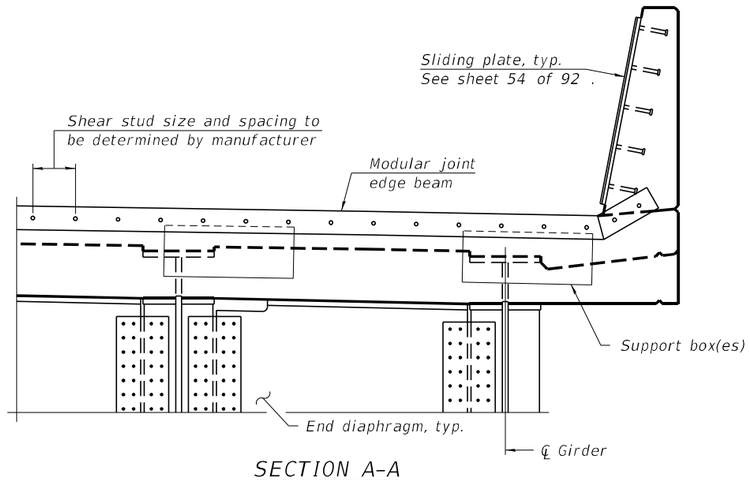

SECTION A-A

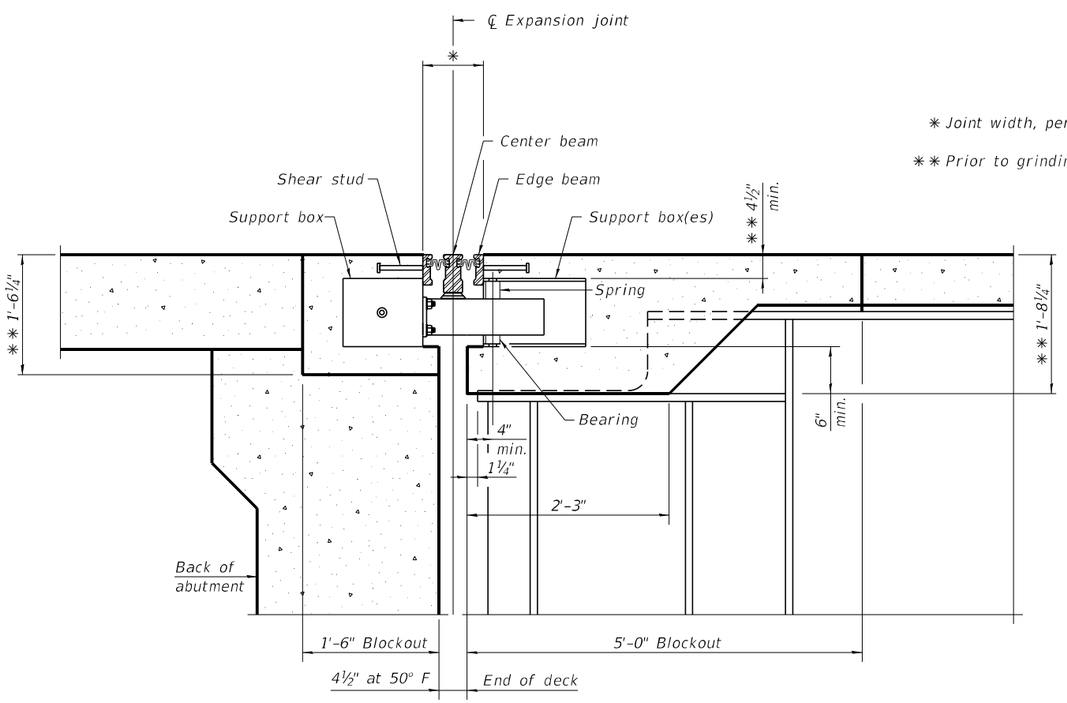

SECTION B-B

(Dimensions shown at right ∠'s to the joint)

✱ Joint width, per manufacturer.

✱✱ Prior to grinding.

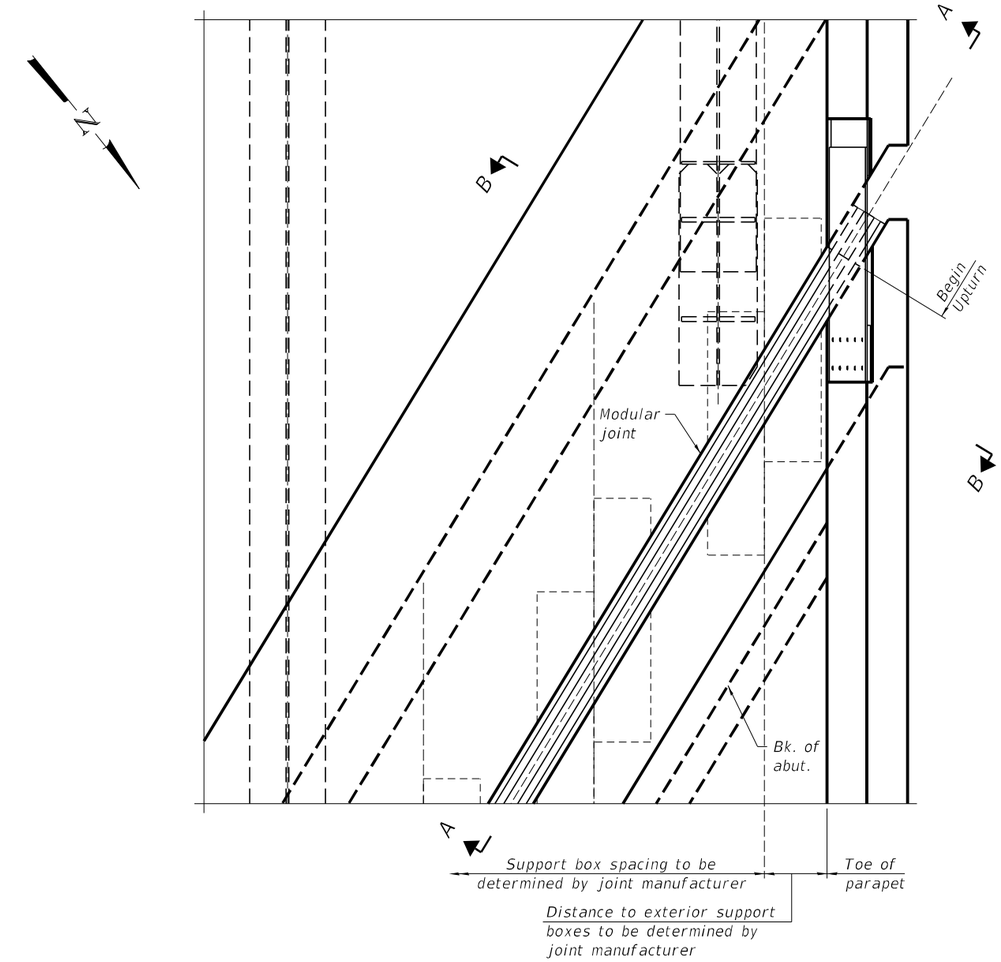

PARTIAL PLAN

Notes:

Actual dimensions may vary depending on modular joint manufacturer's design.

A support box is required outside the fascia beam.

Modular expansion joints shall be installed with forming and reinforcement bars in place prior to pouring the adjoining concrete deck span or approach slab.

Modular joint assemblies shall be temporarily supported off the beam ends until the concrete is placed. Additional supports, if required by design, shall be detailed on the shop drawings to connect to the top of the end diaphragm.

Modular expansion joints shall be adjusted for temperature prior to pouring the blockout area.

Modular expansion joints shall be assembled in their final relative position with ends in place for shop inspection and acceptance.

For beam coping details see sheet 66 of 92 .

For end diaphragm details see sheet 64 of 92 .

For modular joint deck edge beam details see sheet 44 of 92 .

Bars in the blockout may be adjusted in the field if necessary to miss joint support boxes, as approved by the Engineer.

Total Long. Movement	Total Lateral Movement	Joint Size
3⅜"	½"	6"

BILL OF MATERIAL
SB (SN 101-0210)

Item	Unit	Quantity
Modular Expansion Joint 6"	Foot	142.0

BILL OF MATERIAL
NB (SN 101-0211)

Item	Unit	Quantity
Modular Expansion Joint 6"	Foot	142.0

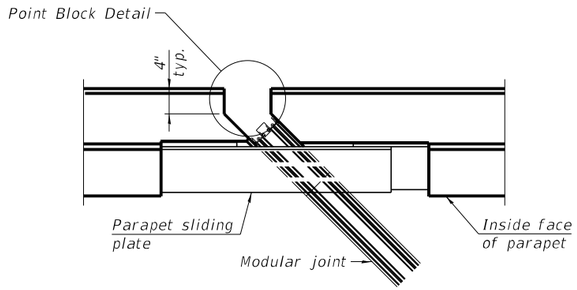

PLAN AT PARAPET

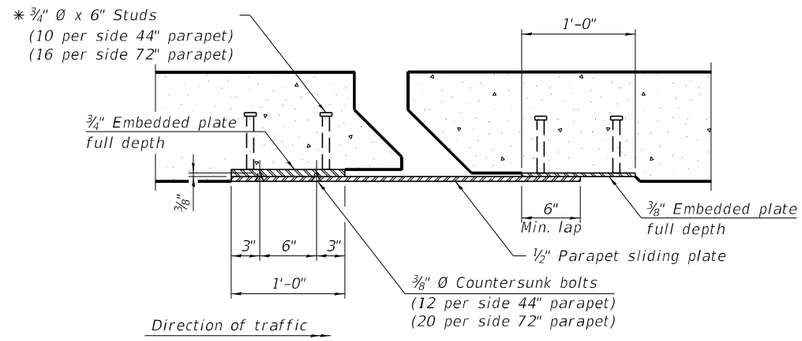

SECTION B-B

Notes:
All steel components shall be galvanized after fabrication according to Article 520.03 of the Standard Specifications.
Cost of parapet sliding plates, embedded plates, and anchorage studs, is included with Modular Expansion Joint 6".
Actual dimension of joint opening may vary based on modular joint manufacturer's design.

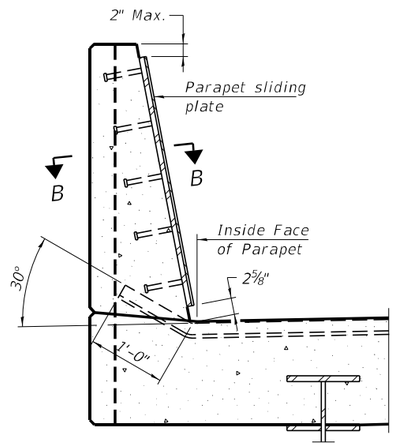

SECTION AT 44" PARAPET

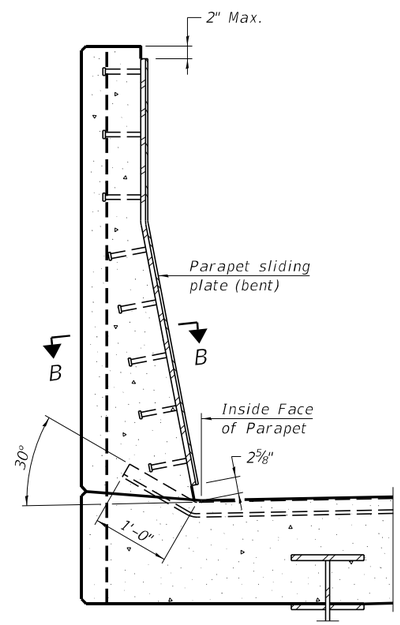

SECTION AT 72" PARAPET

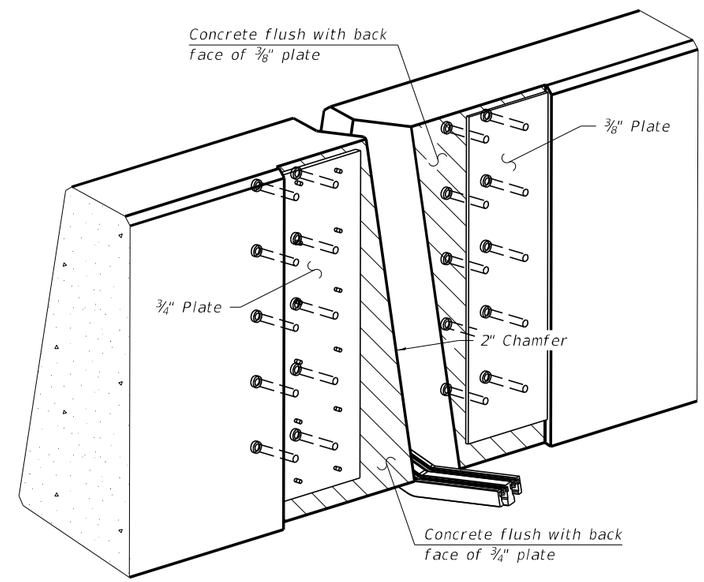

TRIMETRIC VIEW
(Showing embedded plates only;
44" barrier shown, 72" barrier similar)

✳ Granular or solid flux filled headed studs conforming to Article 1006.32 of the Standard Specifications, automatically end welded.

MODEL: $MODELNAME$
FILE NAME: c:\pwworkdir\benesch projects\projects\dms65238\D264C24-1010210_0211-sht-moddtl-2.dgn

benesch
Alfred Benesch & Company
35 W Wacker Drive, Suite 3300
Chicago, Illinois 60601
312-969-0450 Job No. 10800

USER NAME =	DESIGNED - MFH	REVISED -	
	CHECKED - TPS	REVISED -	
PLOT SCALE =	DRAWN - KMS	REVISED -	
PLOT DATE =	CHECKED - TPS	REVISED -	

STATE OF ILLINOIS
DEPARTMENT OF TRANSPORTATION

NORTH MODULAR JOINT DETAILS (2 OF 2)
STRUCTURE NO. 101-0210 & 101-0211

SHEET 54 OF 92 SHEETS

F.A.I. RTE.	SECTION	COUNTY	TOTAL SHEETS	SHEET NO.
39	(201-3)R & (4-1, 5)R	WINNEBAGO	1685	657
		CONTRACT NO. 64C24		
		ILLINOIS	FED. AID PROJECT	

2/11/2025 9:35:24 AM

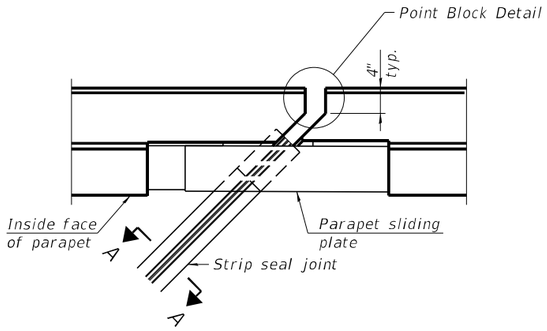

PLAN AT PARAPET

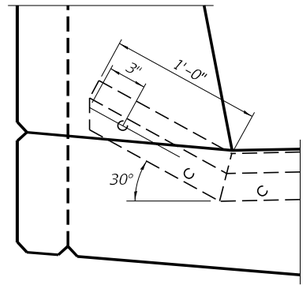

DETAIL A

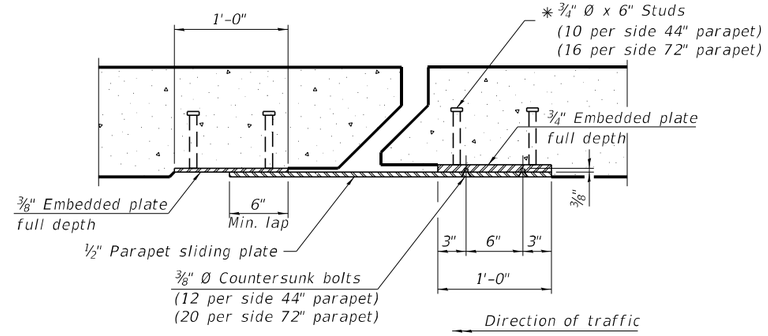

SECTION B-B

Notes:

The strip seal shall be made continuous and shall have a minimum thickness of ¼". The configuration of the strip seal shall match the configuration of the locking edge rails. Open or "webbed" strip seal gland configurations are not permitted. The gland shall be sized for a maximum rated movement of 4 inches.

The locking edge rails depicted are configured for typical applications and are conceptual only. The actual configuration of the locking edge rails and matching strip seal may vary from manufacturer to manufacturer provided they fit the application and meet the minimum anchorage shown. Flanged edge rails, however, will not be allowed. Locking edge rails may exceed the 4½" maximum depth provided the anchorage system is revised according to the manufacturer's recommendation.

The manufacturer's recommended installation methods shall be followed.

All steel components shall be galvanized after fabrication according to Article 520.03 of the Standard Specifications.

The maximum space between locking edge rail segments shall be 3/16" and sealed with a suitable sealant; however, any rail joint within 10' measured perpendicular to the face of the curb or parapet shall be welded as shown in the locking edge rail splice detail.

Cost of parapet sliding plates, embedded plates, and anchorage studs included with Preformed Joint Strip Seal.

The concrete opening below the strip seal will vary based on the locking edge rail chosen by the Contractor. Deck and parapet lengths shown elsewhere in the plans are dimensioned to the concrete opening, not the joint opening, and are based on the rolled locking edge rail. If the Contractor elects to use a different locking edge rail, dimensional adjustments may be required. One exception to this would be the strip seal joint at the end of the precast bridge approach slab. For these cases the pavement connector length shall be adjusted, not the length of the bridge approach slab.

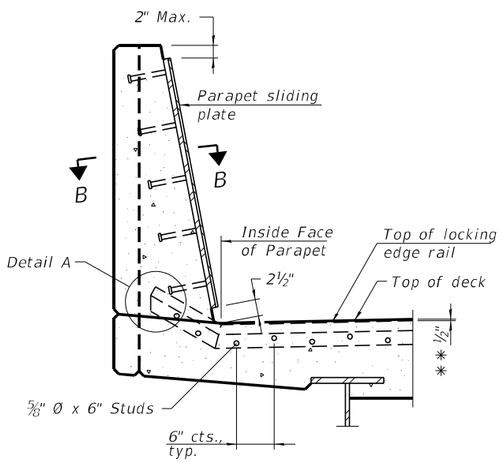

SECTION AT 44" PARAPET

✱✱ Prior to grinding.

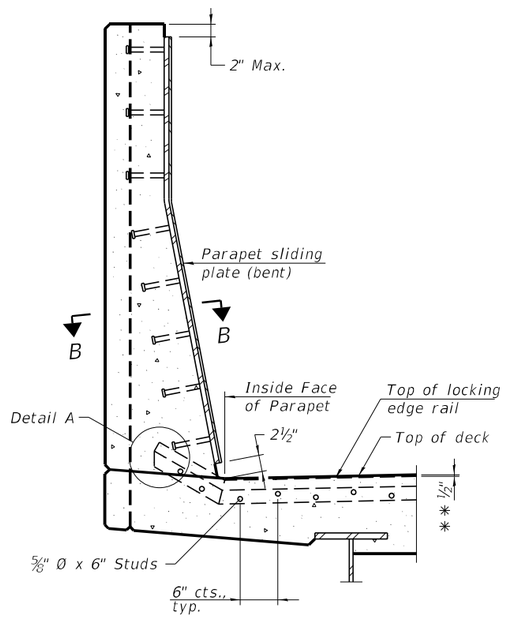

SECTION AT 72" PARAPET

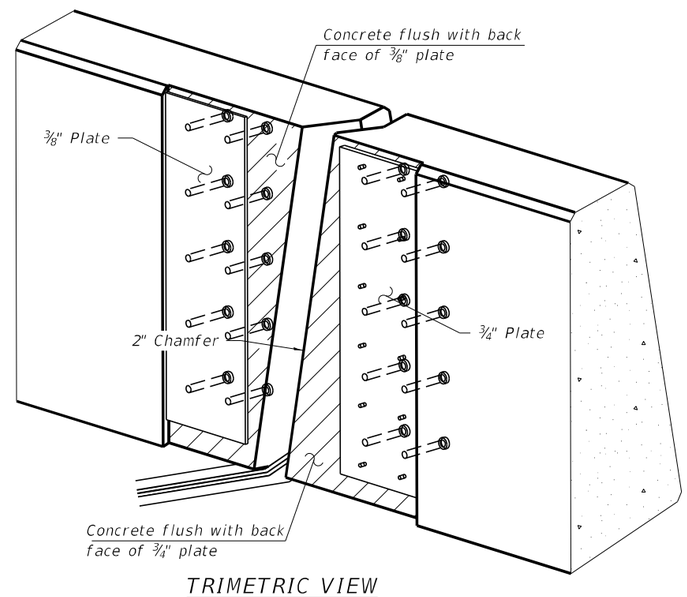

TRIMETRIC VIEW

(Showing embedded plates only; 44" barrier shown, 72" barrier similar)

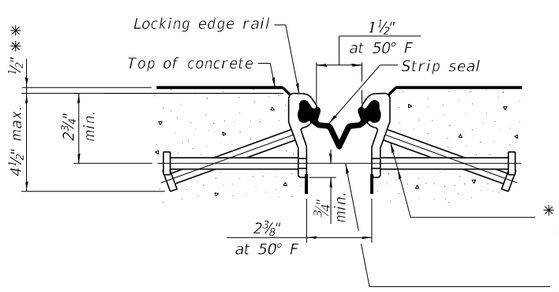

SHOWING ROLLED RAIL JOINT

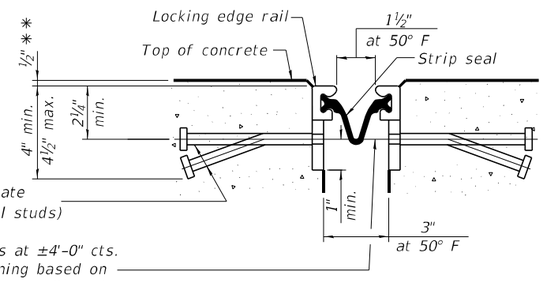

SHOWING WELDED RAIL JOINT

✱ ⅝" Ø x 6" studs @ 6" cts. (alternate angled/bent studs with horizontal studs)

⅜" ϕ threaded rods in 7/16" ϕ holes at ±4'-0" cts. for holding the proper joint opening based on the temperature during the deck pour. Place to miss studs. All rods shall be burned, or sawed off flush with the plates after concrete is set.

SECTION A-A

✱ Granular or solid flux filled headed studs conforming to Article 1006.32 of the Std. Specs., automatically end welded.

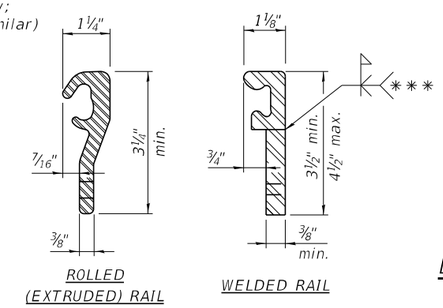

LOCKING EDGE RAILS

✱✱✱ Back gouge not required if complete joint penetration is verified by mock-up.

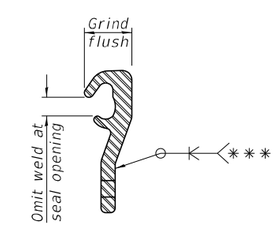

LOCKING EDGE RAIL SPLICE

The inside of the locking edge rail groove shall be free of weld residue. Rolled rail shown, welded rail similar.

BILL OF MATERIAL
SB (SN 101-0210)

Item	Unit	Total
Preformed Joint Strip Seal	Foot	141.0

BILL OF MATERIAL
NB (SN 101-0211)

Item	Unit	Total
Preformed Joint Strip Seal	Foot	141.0

benesch
Alfred Benesch & Company
35 W Wacker Drive, Suite 3300
Chicago, Illinois 60601
312-565-0150 Job No. 10800

USER NAME =	DESIGNED - MFH	REVISED -	
	CHECKED - TPS	REVISED -	
PLOT SCALE =	DRAWN - KMS	REVISED -	
PLOT DATE =	CHECKED - TPS	REVISED -	

STATE OF ILLINOIS
DEPARTMENT OF TRANSPORTATION

SOUTH PREFORMED JOINT STRIP SEAL
STRUCTURE NO. 101-0210 & 101-0211

SHEET 55 OF 92 SHEETS

F.A.I. RTE.	SECTION	COUNTY	TOTAL SHEETS	SHEET NO.
39	(201-3)R & (4-1, 5)R	WINNEBAGO	1685	658
		CONTRACT NO. 64C24		
		ILLINOIS	FED. AID PROJECT	

MODEL: $MODELNAMES
FILE NAME: c:\pwworkdir\benesch projects\projects\dms65238\D264C24-1010210_0211-sht-ssexpl.dgn
2/11/2025 9:35:26 AM

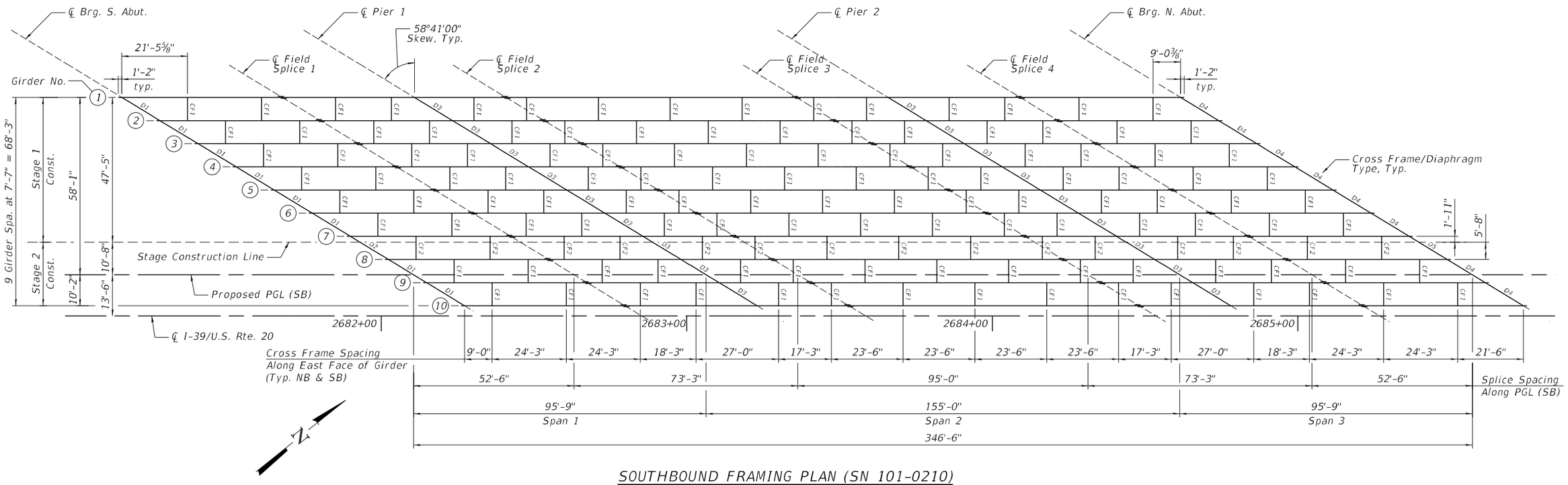

SOUTHBOUND FRAMING PLAN (SN 101-0210)

NOTES:

1. All cross frames and diaphragms shall be installed as steel is erected and secured with erection pins and bolts in accordance with the erection plan approved by the Engineer. Individual diaphragms at supports may be temporarily disconnected to install bearing anchor bolts.
2. Load carrying components designated "CVN" shall conform to the Charpy-V-Notch Impact Energy Requirement, Zone 2.
3. See Sheet 58 of 92 for girder elevation.
4. See Sheets 62 thru 65 of 92 for cross frame/diaphragm details.
5. See Sheet 61 of 92 for field splice details.

MODEL: $MODELNAMES
FILE NAME: c:\pwworkdir\benesch projects\projects\dms65238\D264C24-1010210_0211-sht-frmpln1.dgn

benesch
Alfred Benesch & Company
35 W Wacker Drive, Suite 3300
Chicago, Illinois 60601
312.969.0450 Job No. 10800

USER NAME =	DESIGNED - AAB	REVISED -	
	CHECKED - JHG	REVISED -	
PLOT SCALE =	DRAWN - KMS	REVISED -	
PLOT DATE =	CHECKED - JHG	REVISED -	

STATE OF ILLINOIS
DEPARTMENT OF TRANSPORTATION

FRAMING PLAN (SOUTHBOUND)
STRUCTURE NO. 101-0210 & 101-0211

SHEET 56 OF 92 SHEETS

F.A.I. RTE.	SECTION	COUNTY	TOTAL SHEETS	SHEET NO.
39	(201-3)R & (4-1, 5)R	WINNEBAGO	1685	659
		CONTRACT NO. 64C24		
		ILLINOIS	FED. AID PROJECT	

2/11/2025 9:35:29 AM

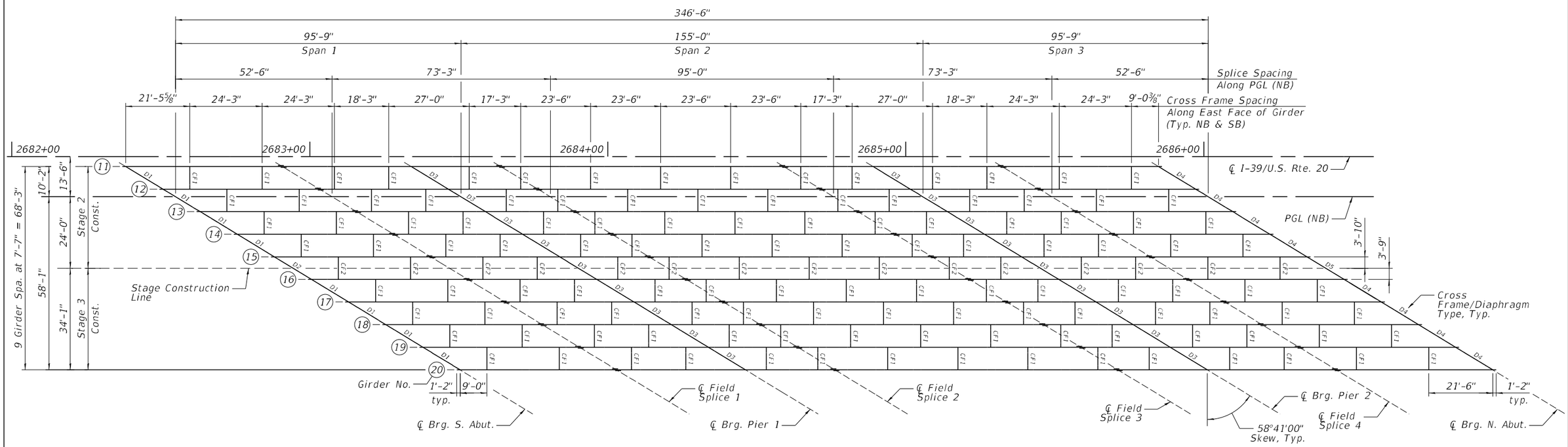

NORTHBOUND FRAMING PLAN (SN 101-0211)

N

NOTES:

1. All cross frames and diaphragms shall be installed as steel is erected and secured with erection pins and bolts in accordance with the erection plan approved by the Engineer. Individual diaphragms at supports may be temporarily disconnected to install bearing anchor bolts.

2. Load carrying components designated "CVN" shall conform to the Charpy-V-Notch Impact Energy Requirement, Zone 2.

3. See Sheet 58 of 92 for girder elevation.

4. See Sheets 62 thru 65 of 92 for cross frame/diaphragm details.

5. See Sheet 61 of 92 for field splice details.

MODEL: SMODELNAMES
FILE NAME: c:\pwworkdir\benesch projects\dms65238\D264C24-1010210_0211-sht-frmpln2.dgn

benesch
Alfred Benesch & Company
35 W Wacker Drive, Suite 3300
Chicago, Illinois 60601
312-565-0450 Job No. 10800

USER NAME =	DESIGNED - AAB	REVISED -	
	CHECKED - JHG	REVISED -	
PLOT SCALE =	DRAWN - KMS	REVISED -	
PLOT DATE =	CHECKED - JHG	REVISED -	

STATE OF ILLINOIS
DEPARTMENT OF TRANSPORTATION

FRAMING PLAN (NORTHBOUND)
STRUCTURE NO. 101-0210 & 101-0211

SHEET 57 OF 92 SHEETS

F.A.I. RTE.	SECTION	COUNTY	TOTAL SHEETS	SHEET NO.
39	(201-3)R & (4-1, 5)R	WINNEBAGO	1685	660
		CONTRACT NO. 64C24		
		ILLINOIS	FED. AID PROJECT	

2/11/2025 9:35:32 AM

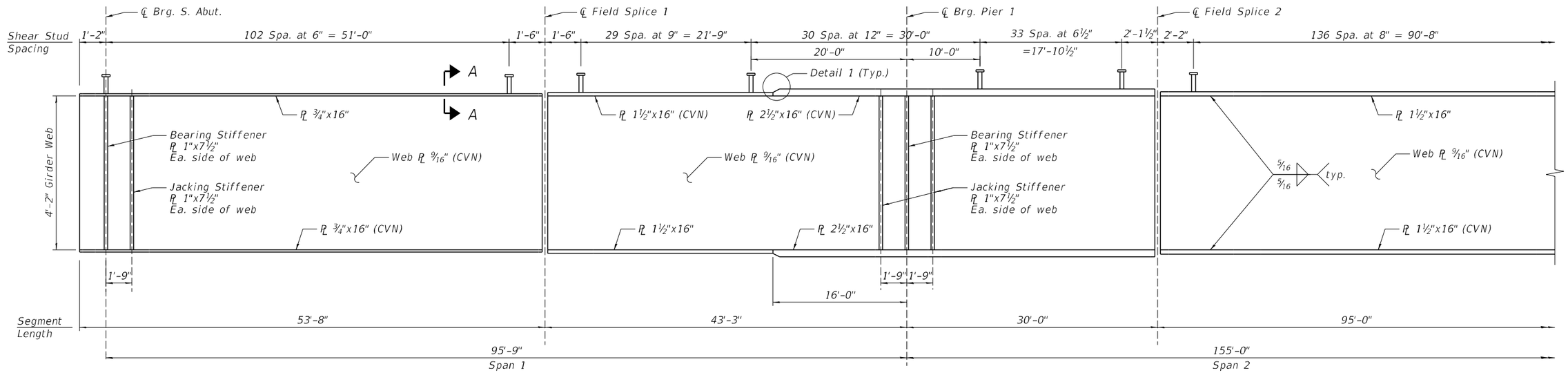

GIRDER ELEVATION

(Cross Frame Connection Plates Not Shown For Clarity)

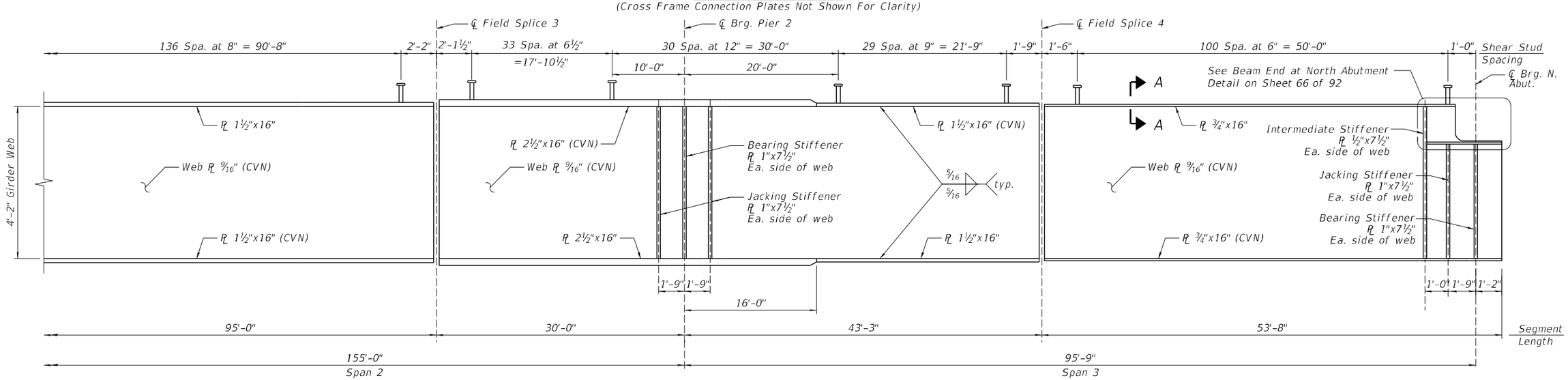

GIRDER ELEVATION

(Cross Frame/Diaphragm Connection Plates Not Shown For Clarity)

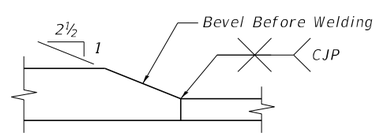

DETAIL 1

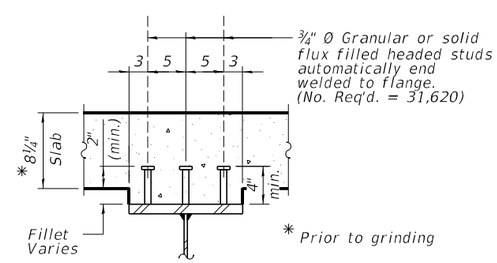

SECTION A-A

NOTES:

1. All structural steel shall be AASHTO M270 Grade 50.
2. Load carrying components designated "CVN" shall conform to the Charpy-V-Notch Impact Energy Requirement, Zone 2.
3. See Sheets 56 & 57 of 92 for framing plan.
4. See Sheets 62 thru 65 of 92 for cross frame and diaphragm details.
5. See Sheet 61 of 92 for field splice details.
6. See Sheet 66 of 92 for girder details.

MODEL: sMODELNAMES
FILE NAME: c:\pwworkdir\benesch projects\projects\dms65238\D264C24-10\0210_0211-sht-grdrel.dgn

benesch
Alfred Benesch & Company
35 W Wacker Drive, Suite 3300
Chicago, Illinois 60601
3124964050 Job No. 10800

USER NAME =	DESIGNED - AAB	REVISED -	
	CHECKED - JHG	REVISED -	
PLOT SCALE =	DRAWN - KMS	REVISED -	
PLOT DATE =	CHECKED - JHG	REVISED -	

STATE OF ILLINOIS
DEPARTMENT OF TRANSPORTATION

GIRDER ELEVATION
STRUCTURE NO. 101-0210 & 101-0211

SHEET 58 OF 92 SHEETS

F.A.I. RTE.	SECTION	COUNTY	TOTAL SHEETS	SHEET NO.
39	(201-3)R & (4-1, 5)R	WINNEBAGO	1685	661
		CONTRACT NO. 64C24		
	ILLINOIS	FED. AID PROJECT		

2/11/2025 9:35:34 AM

INTERIOR GIRDER MOMENT TABLE				
		0.4 Sp. 1/ 0.6 Sp. 3	Pier 1/ Pier 2	0.5 Sp. 2
Is	(in^4)	21,314	61,026	37,695
Ic(n)	(in^4)	55,913	-----	83,107
Ic(3n)	(in^4)	41,505	-----	61,707
Ic(cr)	(in^4)	-----	69,009	-----
Ss	(in^3)	828	2,219	1,422
Sc(n)	(in^3)	1,206	-----	1,861
Sc(3n)	(in^3)	1,097	-----	1,707
Sc(cr)	(in^3)	-----	2,320	-----
Sx	(in^3)	1,165	2,296	1,751
DC1	(k/')	1.019	1.210	1.101
MDC1	('k)	318	2,194	1,246
DC2	(k/')	0.386	0.386	0.386
MDC2	('k)	133	738	425
DW	(k/')	0.380	0.380	0.380
MDW	('k)	131	727	419
LLDF	('k)	0.612	0.584	0.563
M_{LL+IM}	('k)	1,299	1,947	1,663
fℓ (Strength I)	('k)	16.0	14.5	14.8
Mu + ⅓ fℓ Sxc	('k)	3,551	9,088	6,347
Øf Mn	(ksi)	6,251	-	9,113
fs DC1	(ksi)	4.6	11.9	10.5
fs DC2	(ksi)	1.5	3.8	3.0
fs DW	(ksi)	1.4	3.8	2.9
fs (LL+IM)	(ksi)	12.9	10.1	10.7
fℓ (Service II)	(ksi)	12.1	11.2	11.4
fs+ $^{fl}/_2$ (Service II)	(ksi)	30.3	38.1	36.1
Service II Resistance	(ksi)	47.5	47.5	47.5
fs + $^{fl}/_3$ (Strength I)	(ksi)	37.7	47.7	45.0
Øf Fn	(ksi)	-	50.0	-
Vf	(k)	125.7	458.3	105.2

EXTERIOR GIRDER MOMENT TABLE				
		0.4 Sp. 1/ 0.6 Sp. 3	Pier 1/ Pier 2	0.5 Sp. 2
Is	(in^4)	21,314	61,026	37,695
Ic(n)	(in^4)	55,203	-----	81,955
Ic(3n)	(in^4)	40,800	-----	60,761
Ic(cr)	(in^4)	-----	69,009	-----
Ss	(in^3)	828	2,219	1,422
Sc(n)	(in^3)	1,202	-----	1,855
Sc(3n)	(in^3)	1,090	-----	1,699
Sc(cr)	(in^3)	-----	2,320	-----
Sx	(in^3)	1,162	2,297	1,747
DC1	(k/')	0.951	1.142	1.033
MDC1	('k)	295	2,063	1,173
DC2	(k/')	0.551	0.551	0.551
MDC2	('k)	190	1,054	607
DW	(k/')	0.360	0.360	0.360
MDW	('k)	124	689	397
LLDF	('k)	0.612	0.584	0.563
M_{LL+IM}	('k)	1,299	1,947	1,663
fℓ (Strength I)	('k)	3.2	2.9	3.0
Mu + ⅓ fℓ Sxc	('k)	3,169	8,522	5,876
Øf Mn	(ksi)	6,235	-	9,030
fs DC1	(ksi)	4.3	11.2	9.9
fs DC2	(ksi)	2.1	5.5	4.3
fs DW	(ksi)	1.4	3.6	2.8
fs (LL+IM)	(ksi)	13.0	10.1	10.8
fℓ (Service II)	(ksi)	2.4	2.2	2.3
fs+ $^{fl}/_2$ (Service II)	(ksi)	25.8	34.4	32.1
Service II Resistance	(ksi)	47.5	47.5	47.5
fs + $^{fl}/_3$ (Strength I)	(ksi)	33.8	44.7	41.8
Øf Fn	(ksi)	-	50.0	-
Vf	(k)	106.2	413.0	83.4

INTERIOR GIRDER REACTION TABLE			
		S. Abut./ N. Abut.	Pier 1/ Pier 2
LLDF		1.044	1.044
OCF		1.333	1.333
RDC1	(k)	29.4	168.0
RDC2	(k)	10.8	56.2
RDW	(k)	10.6	55.3
R_{LL}	(k)	95.0	208.2
R_{IM}	(k)	21.7	38.5
RTotal (Strength I) (Impact)	(k)	270.3	794.9
RTotal (Strength I) (No Impact)	(k)	232.3	727.5

EXTERIOR GIRDER REACTION TABLE			
		S. Abut./ N. Abut.	Pier 1/ Pier 2
LLDF		0.827	0.827
OCF		1.333	1.333
RDC1	(k)	27.5	158.1
RDC2	(k)	15.5	80.2
RDW	(k)	10.1	52.4
R_{LL}	(k)	75.2	165.0
R_{IM}	(k)	17.2	30.5
RTotal (Strength I) (Impact)	(k)	230.6	718.4
RTotal (Strength I) (No Impact)	(k)	200.5	665.0

Is, Ss: Non-composite moment of inertia and section modulus of the steel section used for computing fs (Total-Strength I, and Service II) due to non-composite dead loads ($in.^4$ and $in.^3$).

Ic(n), Sc(n): Composite moment of inertia and section modulus of the steel and deck based upon the modular ratio, "n", used for computing fs (Total-Strength I, and Service II) in uncracked sections due to short term composite live loads ($in.^4$ and $in.^3$).

Ic(3n), Sc(3n): Composite moment of inertia and section modulus of the steel and deck based upon 3 times the modular ratio, "3n", used for computing fs (Total-Strength I, and Service II) in uncracked sections due to long-term composite (superimposed) dead loads ($in.^4$ and $in.^3$).

Ic(cr), Sc(cr): Composite moment of inertia and section modulus of the steel and longitudinal deck reinforcement, used for computing fs (Total-Strength I and Service II) in cracked sections, due to both short-term composite live loads and long-term composite (superimposed) dead loads ($in.^4$ and $in.^3$).

Sx: Section modulus about the major axis of section to the controlling flange, tension or compression, taken as yield moment with respect to the controlling flange over the yield strength of the controlling flange ($in.^3$).

DC1: Un-factored non-composite dead load (kips/ft.).

MDC1: Un-factored moment due to non-composite dead load (kip-ft.).

DC2: Un-factored long-term composite (superimposed excluding future wearing surface) dead load (kips/ft.).

MDC2: Un-factored moment due to long-term composite (superimposed excluding future wearing surface) dead load (kip-ft.).

DW: Un-factored long-term composite (superimposed future wearing surface only) dead load (kips/ft.).

MDW: Un-factored moment due to long-term composite (superimposed future wearing surface only) dead load (kip-ft.).

LLDF: Live Load Distribution Factor for moment and shear computed according to Article 4.6.2.2 and other IDOT provisions.

M_{LL+IM}: Un-factored live load moment plus dynamic load allowance (impact)(kip-ft.).

Mu: Strength I load combination of factored design moments (kip-ft.).
1.25 (MDC1+ MDC2) + 1.5 MDW + 1.75 M_{LL+IM}

fℓ: Factored calculated flange lateral bending stress as calculated using Article 6.10.1.6 and as further simplified by IDOT provisions (ksi).

Øf Mn: Factored nominal flexural resistance of the section determined as specified in Article 6.10.7.1 or A6 as applicable (kip-ft)

fs DC1: Un-factored stress at edge of flange for controlling steel flange due to vertical non-composite dead loads as calculated below (ksi).
MDC1 / Ss

fs DC2: Un-factored stress at edge of flange for controlling steel flange due to vertical composite dead loads as calculated below (ksi).
MDC2 / Sc(3n) or MDC2 / Sc(cr) as applicable.

fs DW: Un-factored stress at edge of flange for controlling steel flange due to vertical composite future wearing surface loads as calculated below (ksi).
MDW / Sc(3n) or MDW / Sc(cr) as applicable.

fs (LL+IM): Un-factored stress at edge of flange for controlling steel flange due to vertical composite live plus impact loads as calculated below (ksi).
M_{LL+IM} / Sc(n) or M_{LL+IM} / Sc(cr) as applicable.

fs + $^{fl}/_2$ (Service II): Sum of stresses as computed below (ksi).
fsDC1 + fsDC2 + fsDW + 1.3 fs($_{LL+IM}$) + $^{fl}/_2$

Service II Resistance: Composite (0.95RhFyf) or noncomposite (0.80RhFyf) stress capacity according to Article 6.10.4.2 (ksi).

fs + $^{fl}/_3$ (Strength I): Sum of stresses as computed below on non-compact section (ksi).
1.25 (fsDC1 + fsDC2) + 1.5 fsDW + 1.75 fs($_{LL+IM}$) + $^{fl}/_3$

Øf Fn: Factored nominal flexural resistance of the section a specified in Article 6.10.7.2 or 6.10.8 as applicable (ksi).

Vf: Maximum factored shear range in span computed according to Article 6.10.10.

Note:
M_{LL} and R_{LL} include the effects of centrifugal force and superelevation.

OCF: Obtuse Correction Factor according to Article 4.6.2.2.3c or as further simplified by IDOT provisions.

R_{DC1} : Un-factored reaction due to non-composite dead load (kip).

R_{DC2} : Un-factored reaction due to long-term composite (superimposed excluding future wearing surface) dead load (kip).

R_{DW} : Un-factored reaction due to long-term composite (superimposed future wearing surface only) dead load (kip).

R_{LL} : Un-factored live load reaction (kip).

R_{IM} : Un-factored dynamic load allowance (impact) (kip).

R_{TOTAL} (Strength I)(Impact) : Strength I load combination of factored design reactions (kip).
1.25 (R_{DC1} + R_{DC2}) + 1.5 R_{DW} + 1.75 (R_{LL} + R_{IM})

R_{TOTAL} (Strength I)(No Impact) : Strength I load combination of factored design reactions, not including dynamic load allowance (Impact) (kip).
1.25 (R_{DC1} + R_{DC2}) + 1.5 R_{DW} + 1.75 (R_{LL})

MODEL: sMODELNAMES
FILE NAME: c:\pwworkdir\benesch projects\projects\dms65238\D264C24-1010210_0211-sht-mrtbl.dgn

benesch
Alfred Benesch & Company
35 W Wacker Drive, Suite 3300
Chicago, Illinois 60601
312-565-0450 Job No. 10800

USER NAME =	DESIGNED - AAB	REVISED -	
	CHECKED - JHG	REVISED -	
PLOT SCALE =	DRAWN - KMS	REVISED -	
PLOT DATE =	CHECKED - JHG	REVISED -	

STATE OF ILLINOIS
DEPARTMENT OF TRANSPORTATION

GIRDER MOMENT AND REACTION TABLES
STRUCTURE NO. 101-0210 & 101-0211

SHEET 59 OF 92 SHEETS

F.A.I. RTE.	SECTION	COUNTY	TOTAL SHEETS	SHEET NO.
39	(201-3)R & (4-1, 5)R	WINNEBAGO	1685	662
		CONTRACT NO. 64C24		
		ILLINOIS	FED. AID PROJECT	

2/11/2025 9:35:37 AM

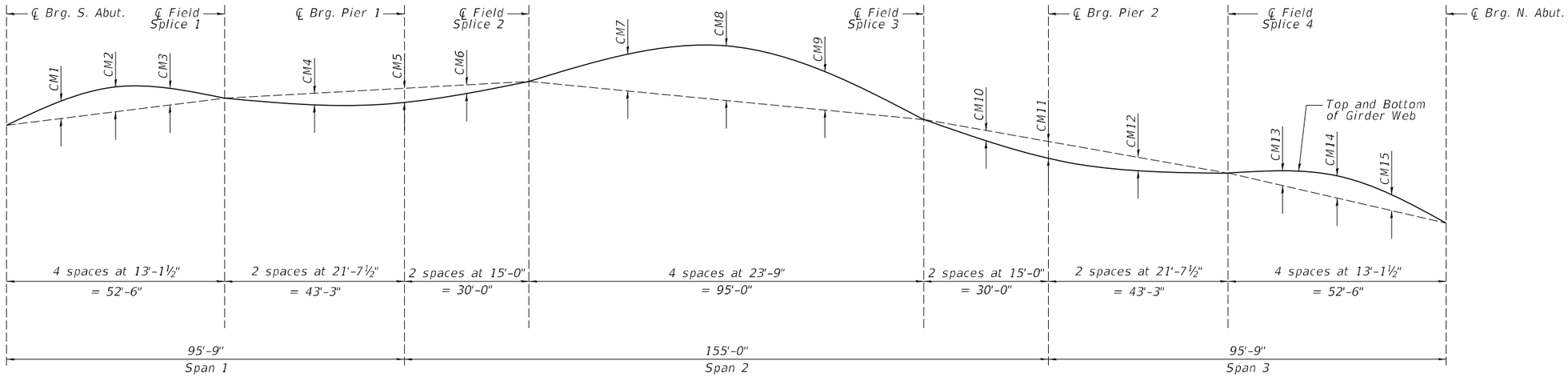

CAMBER DIAGRAM

GIRDER DIMENSIONS

Girders	CM1	CM2	CM3	CM4	CM5	CM6	CM7	CM8	CM9	CM10	CM11	CM12	CM13	CM14	CM15
1 thru 20	15/16"	1¼"	15/16"	⅝"	¾"	½"	3 5/16"	4⅜"	3 5/16"	½"	¾"	⅝"	15/16"	1¼"	15/16"

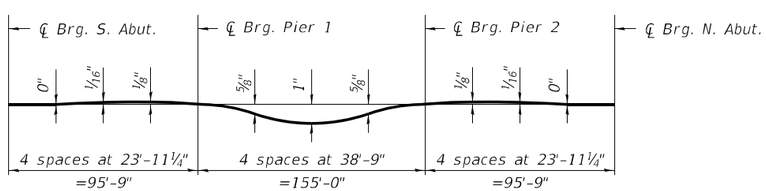

STEEL DEAD LOAD DEFLECTION DIAGRAM

(All Girders)

TOP OF WEB ELEVATIONS*

Location	Girder 1	Girder 2	Girder 3	Girder 4	Girder 5	Girder 6	Girder 7	Girder 8	Girder 9	Girder 10
℄ Brg. S. Abut.	795.92	796.14	796.35	796.56	796.72	796.76	796.68	796.56	796.43	796.30
℄ Field Splice 1	796.09	796.28	796.47	796.64	796.78	796.80	796.69	796.55	796.39	796.23
℄ Brg. Pier 1	796.14	796.30	796.46	796.61	796.72	796.72	796.59	796.43	796.26	796.09
℄ Field Splice 2	796.28	796.42	796.56	796.69	796.79	796.77	796.63	796.46	796.28	796.09
℄ Field Splice 3	796.16	796.26	796.35	796.43	796.48	796.41	796.23	796.01	795.79	795.55
℄ Brg. Pier 2	795.94	796.03	796.11	796.18	796.22	796.13	795.93	795.69	795.45	795.19
℄ Field Splice 4	795.77	795.85	795.91	795.97	795.99	795.88	795.66	795.39	795.12	794.84
℄ Brg. N. Abut.	795.46	795.50	795.54	795.58	795.57	795.43	795.18	794.89	794.59	794.29

Location	Girder 11	Girder 12	Girder 13	Girder 14	Girder 15	Girder 16	Girder 17	Girder 18	Girder 19	Girder 20
℄ Brg. S. Abut.	796.31	796.47	796.62	796.76	796.86	796.84	796.71	796.53	796.34	795.87
℄ Field Splice 1	796.22	796.35	796.48	796.59	796.67	796.62	796.46	796.25	796.04	795.57
℄ Brg. Pier 1	796.06	796.16	796.26	796.34	796.40	796.33	796.15	795.93	795.70	795.22
℄ Field Splice 2	796.05	796.13	796.21	796.28	796.31	796.23	796.03	795.81	795.57	795.09
℄ Field Splice 3	795.46	795.50	795.53	795.55	795.54	795.42	795.17	794.89	794.61	794.08
℄ Brg. Pier 2	795.10	795.13	795.14	795.15	795.13	794.99	794.73	794.43	794.12	793.57
℄ Field Splice 4	794.72	794.73	794.74	794.73	794.69	794.53	794.24	793.91	793.58	792.99
℄ Brg. N. Abut.	794.15	794.13	794.11	794.08	794.01	793.82	793.51	793.16	792.80	792.18

*For fabrication only.

NOTES:

1. See sheet 58 of 92 for girder segment lengths.

MODEL: sMODELNAMES
FILE NAME: c:\pwworkdir\benesch projects\projects\dms65238\D264C24-1010210_0211-sht-camber.dgn

benesch
Alfred Benesch & Company
35 W Wacker Drive, Suite 3300
Chicago, Illinois 60601
312-565-0150 Job No. 10800

USER NAME =	DESIGNED - AAB	REVISED -	
	CHECKED - KMP	REVISED -	
PLOT SCALE =	DRAWN - KMS	REVISED -	
PLOT DATE =	CHECKED - KMP	REVISED -	

STATE OF ILLINOIS
DEPARTMENT OF TRANSPORTATION

GIRDER TOP OF WEB ELEVATIONS AND CAMBER
STRUCTURE NO. 101-0210 & 101-0211

SHEET 60 OF 92 SHEETS

F.A.I. RTE.	SECTION	COUNTY	TOTAL SHEETS	SHEET NO.
39	(201-3)R & (4-1, 5)R	WINNEBAGO	1685	663
		CONTRACT NO. 64C24		
		ILLINOIS	FED. AID PROJECT	

2/11/2025 9:35:40 AM

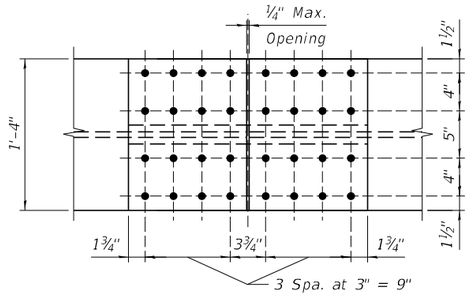

TOP FLANGE SPLICE

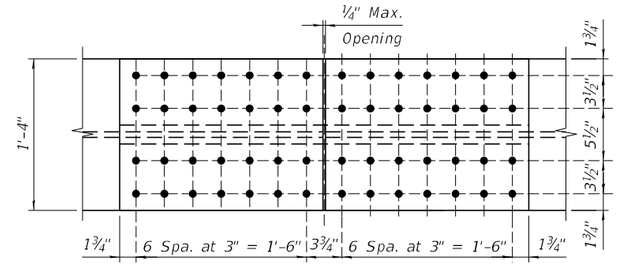

TOP FLANGE SPLICE

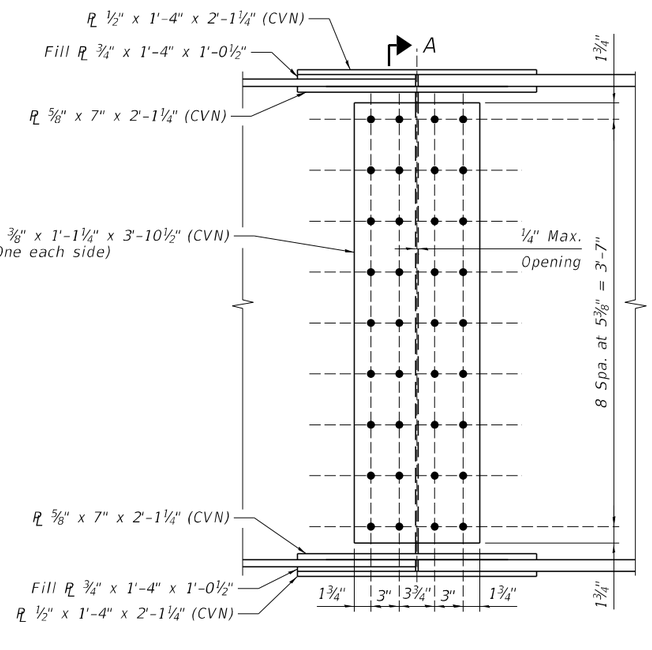

ELEVATION

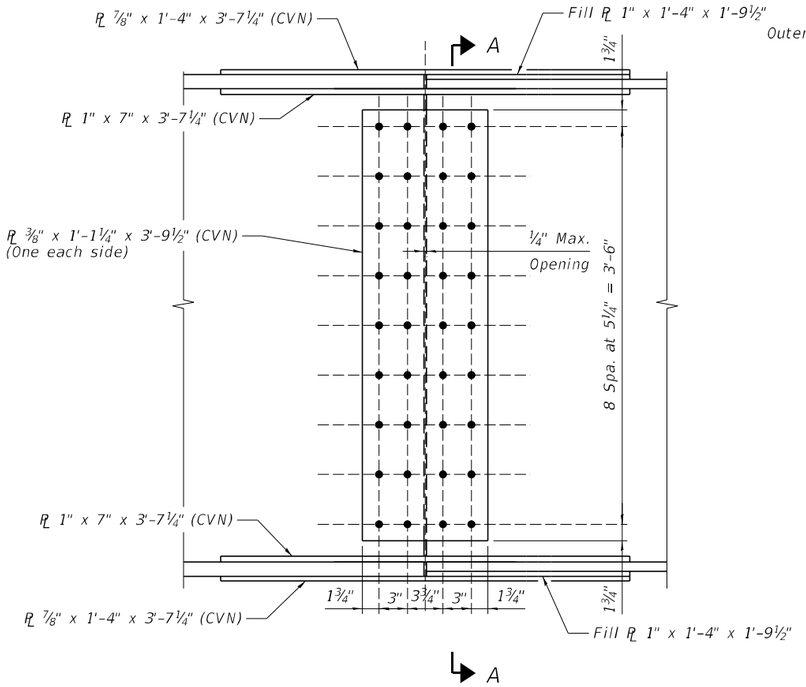

ELEVATION

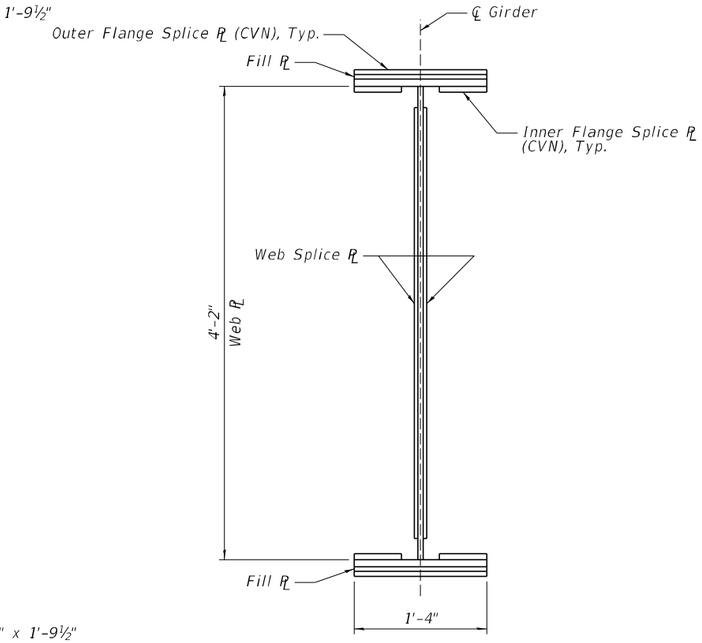

SECTION A-A

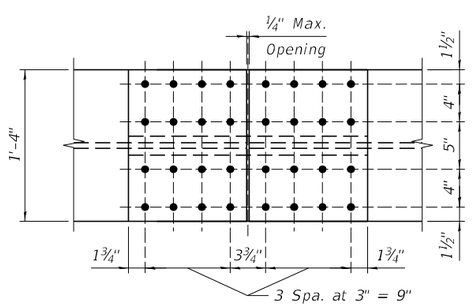

BOTTOM FLANGE SPLICE

FIELD SPLICE 1 & 4

(40 Total Locations)

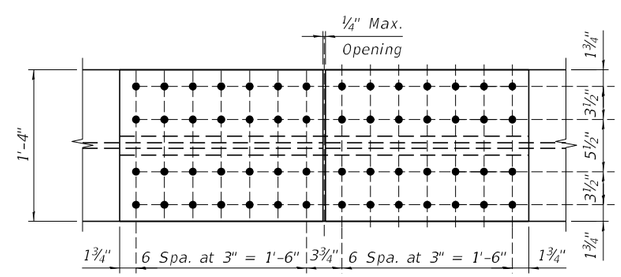

BOTTOM FLANGE SPLICE

FIELD SPLICE 2 & 3

(40 Total Locations)

NOTES:

1. Load carrying components designated "CVN" shall conform to the Charpy-V-Notch Impact Energy Requirement, Zone 2.
2. Fasteners shall be ASTM F 3125 A325 Type 1, hot dipped galvanized bolts. Bolts ⅞" diameter, holes 15/16" diameter. See provision for "Metalizing of Structural Steel".

MODEL: sMODELNAMES
FILE NAME: c:\pwworkdir\benesch projects\projects\dms65238\D264C24-1010210_0211-sht-fsdtls.dgn

benesch
Alfred Benesch & Company
35 W Wacker Drive, Suite 3300
Chicago, Illinois 60601
312-969-0450 Job No. 10800

USER NAME =	DESIGNED - AAB	REVISED -	
	CHECKED - JHG	REVISED -	
PLOT SCALE =	DRAWN - KMS	REVISED -	
PLOT DATE =	CHECKED - JHG	REVISED -	

STATE OF ILLINOIS
DEPARTMENT OF TRANSPORTATION

FIELD SPLICE DETAILS
STRUCTURE NO. 101-0210 & 101-0211

SHEET 61 OF 92 SHEETS

F.A.I. RTE.	SECTION	COUNTY	TOTAL SHEETS	SHEET NO.
39	(201-3)R & (4-1, 5)R	WINNEBAGO	1685	664
		CONTRACT NO. 64C24		
	ILLINOIS	FED. AID PROJECT		

2/11/2025 9:35:42 AM

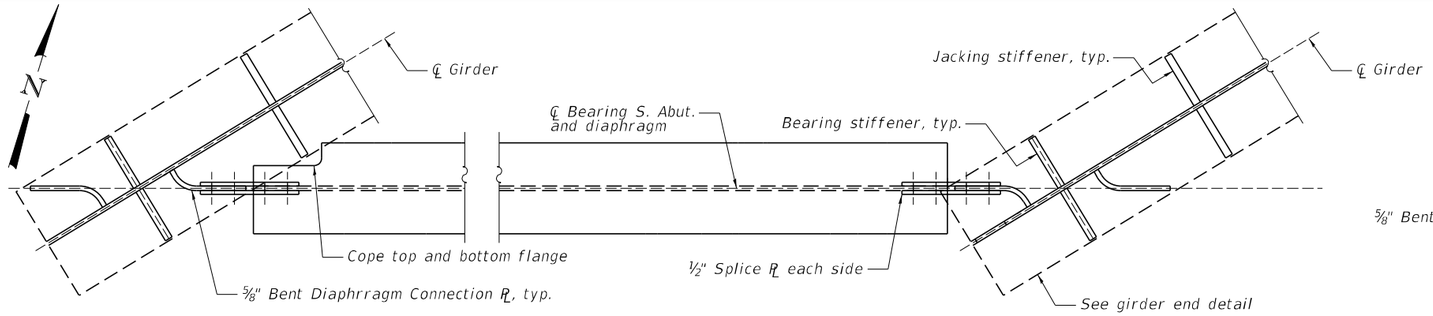

DIAPHRAGM D1 - PLAN

(Diaphragm D2 similar, with splice)

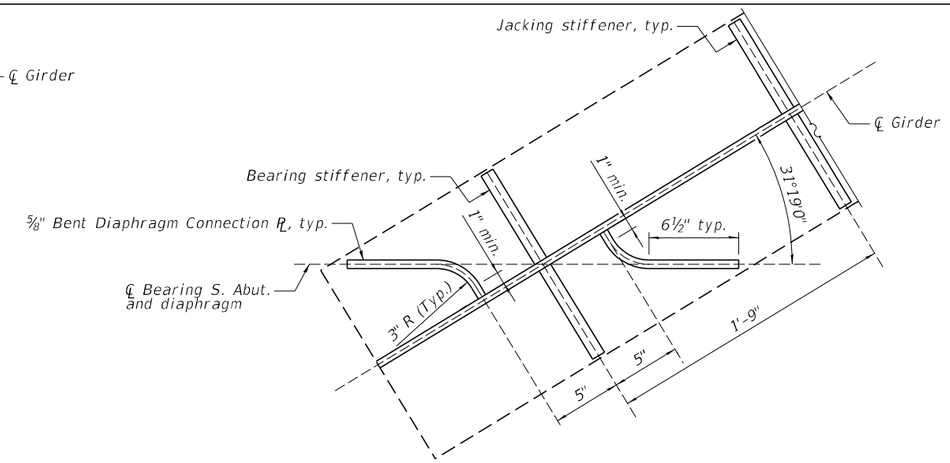

GIRDER END DETAIL

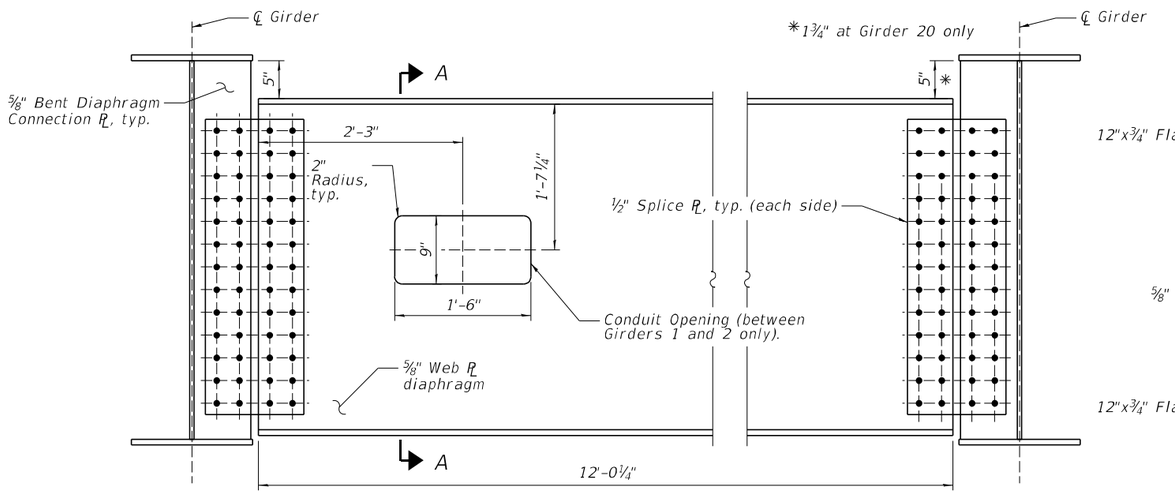

DIAPHRAGM D1 - ELEVATION

(Looking upstation)

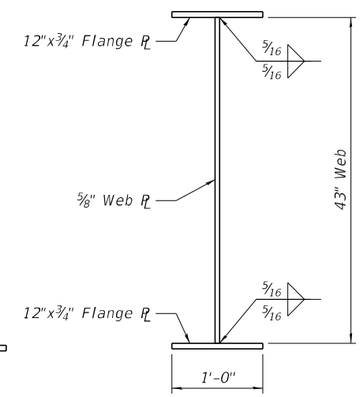

SECTION A-A

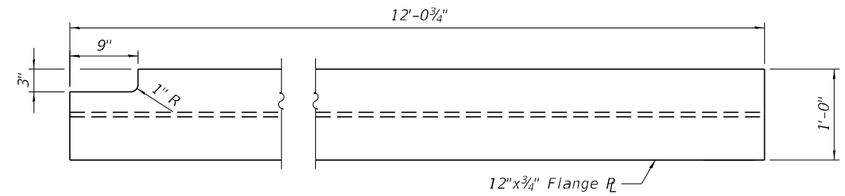

TOP & BOTTOM FLANGE PLAN

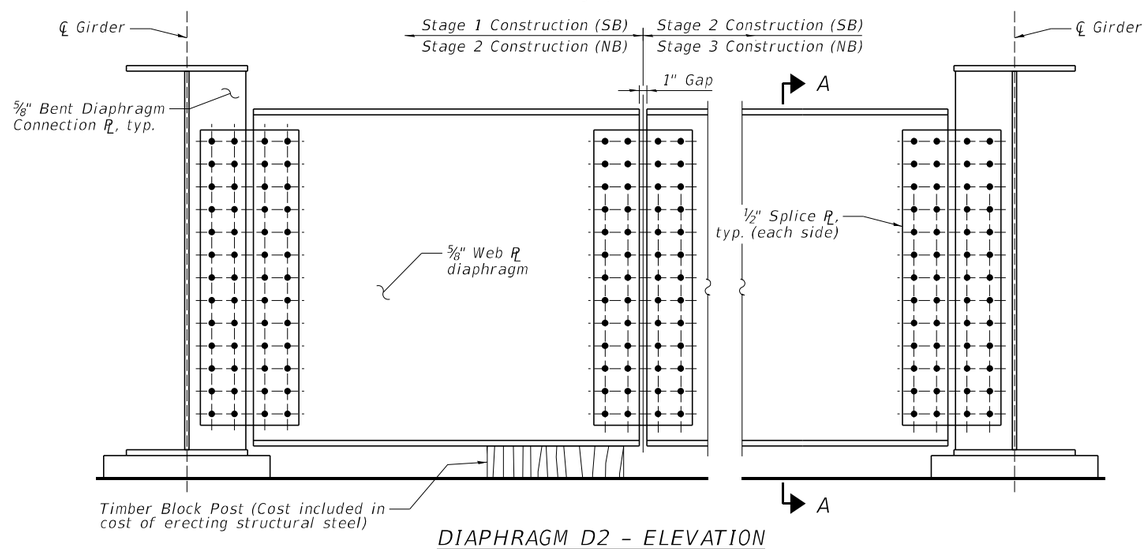

DIAPHRAGM D2 - ELEVATION

(Looking upstation)

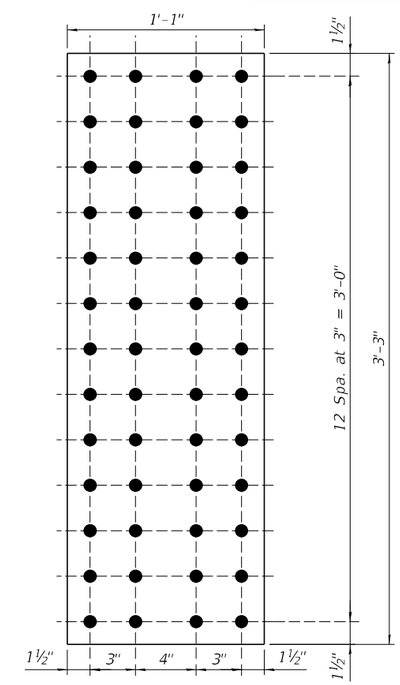

SPLICE PLATE

NOTES:

1. All diaphragms between girders shall be installed with erection pins and bolts in accordance with the erection plan approved by the Engineer. Individual diaphragms at supports may be temporarily disconnected to install bearing anchor rods.
2. For locations of diaphragms, see Sheets 56 and 57 of 92 .
3. For further details on the bent diaphragm connection plates, see Sheet 66 of 92 .
4. Fasteners shall be ASTM F 3125 A325 Type 1, hot dip galvanized bolts. Bolts ⅞" diameter, holes 15/16" diameter. See special provision for "Metallizing of Structural Steel"

MODEL: sMODELNAMES
FILE NAME: c:\pwworkdir\benesch projects\projects\d0247003\D264C24-1010210_0211-sht-xframe-1_REV-INSP.dgn

benesch
Alfred Benesch & Company
35 W Wacker Drive, Suite 3300
Chicago, Illinois 60601
312-969-0450 Job No. 10800

USER NAME =	DESIGNED - AAB	REVISED -	
	CHECKED - JHG	REVISED -	
PLOT SCALE =	DRAWN - KMS	REVISED -	
PLOT DATE =	CHECKED - JHG	REVISED -	

STATE OF ILLINOIS
DEPARTMENT OF TRANSPORTATION

DIAPHRAGM DETAILS (1 OF 3)
STRUCTURE NO. 101-0210 & 101-0211

SHEET 62 OF 92 SHEETS

F.A.I. RTE.	SECTION	COUNTY	TOTAL SHEETS	SHEET NO.
39	(201-3)R & (4-1, 5)R	WINNEBAGO	1685	665
		CONTRACT NO. 64C24		
	ILLINOIS	FED. AID PROJECT		

5/16/2025 12:33:28 PM

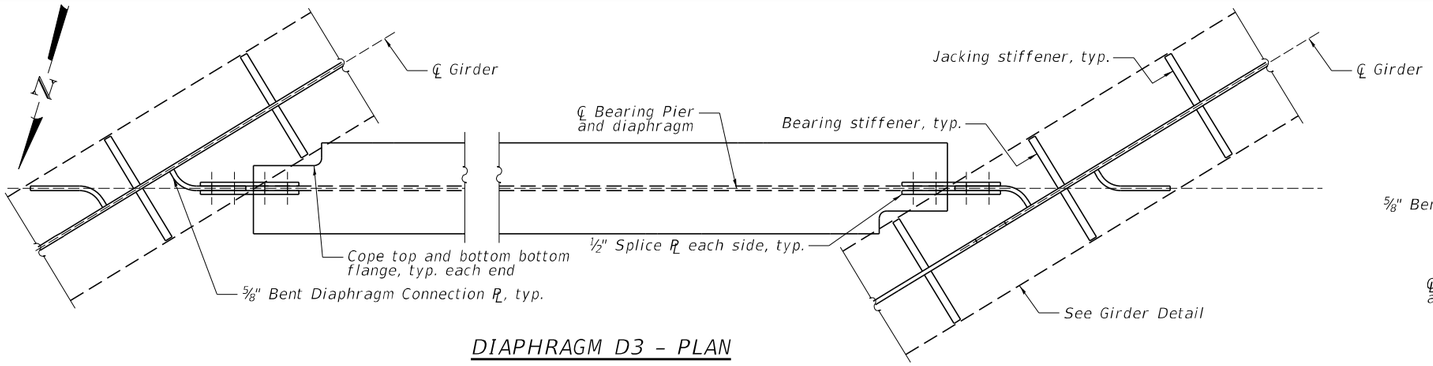

DIAPHRAGM D3 - PLAN

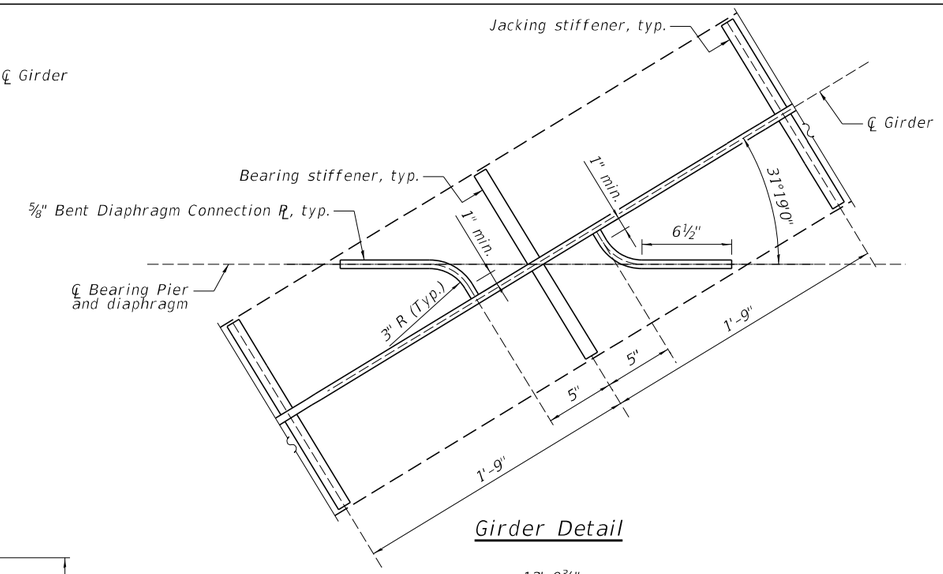

Girder Detail

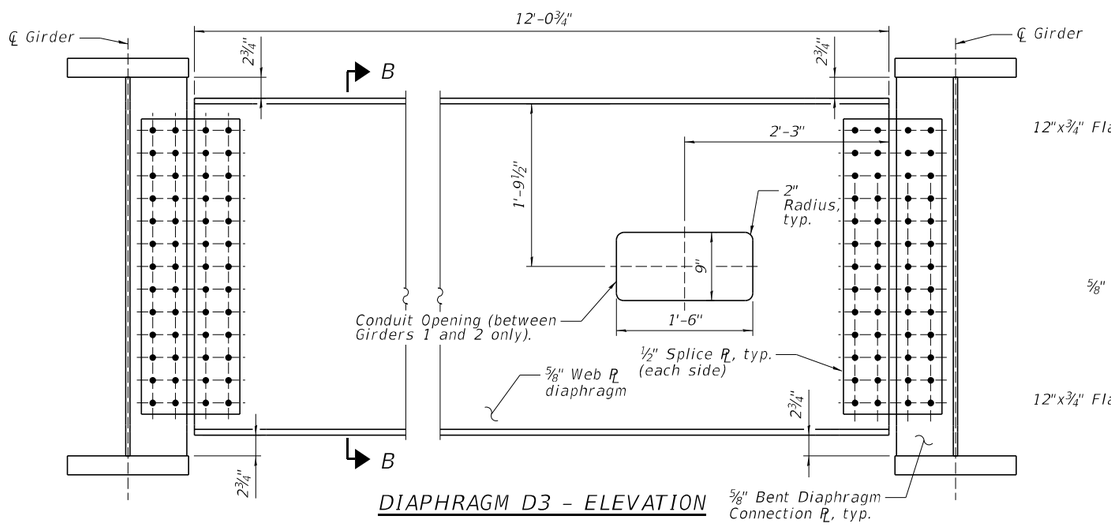

DIAPHRAGM D3 - ELEVATION

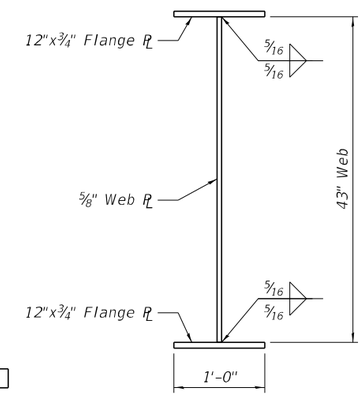

SECTION B-B

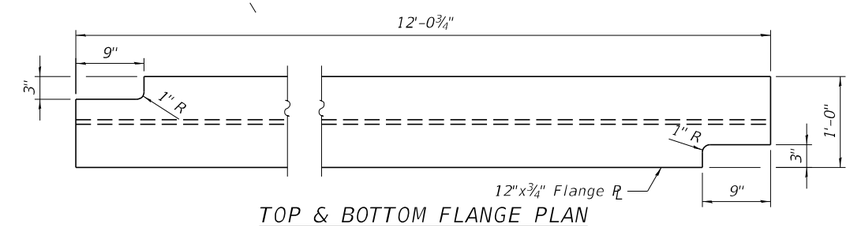

TOP & BOTTOM FLANGE PLAN

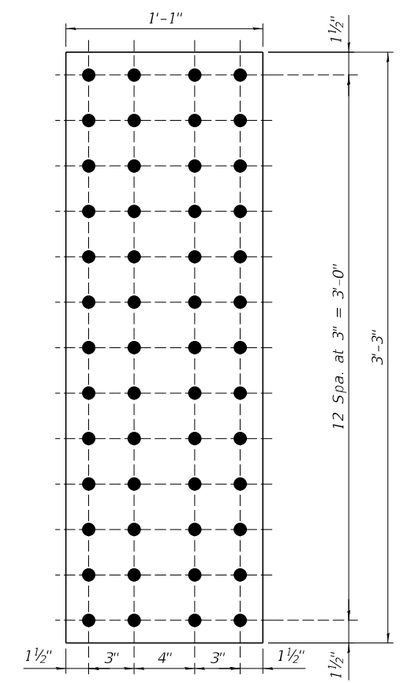

SPLICE PLATE

NOTES:

1. All diaphragms between girders shall be installed with erection pins and bolts in accordance with the erection plan approved by the Engineer. Individual diaphragms at supports may be temporarily disconnected to install bearing anchor rods.
2. For locations of diaphragms, see Sheets 56 and 57 of 92 .
3. For further details on the bent diaphragm connection plates, see Sheet 66 of 92 .
4. Fasteners shall be ASTM F 3125 A325 Type 1, hot dip galvanized bolts. Bolts ⅞" diameter, holes 15/16" diameter. See special provision for "Metallizing of Structural Steel"

MODEL: sMODELNAMES
FILE NAME: c:\pwworkdir\benesch projects\projects\dms65238\D264C24-1010210_0211-sht-xframe-2.dgn

benesch
Alfred Benesch & Company
35 W Wacker Drive, Suite 3300
Chicago, Illinois 60601
312-565-0150 Job No. 10800

USER NAME =	DESIGNED - AAB	REVISED -	
	CHECKED - JHG	REVISED -	
PLOT SCALE =	DRAWN - KMS	REVISED -	
PLOT DATE =	CHECKED - JHG	REVISED -	

STATE OF ILLINOIS
DEPARTMENT OF TRANSPORTATION

DIAPHRAGM DETAILS (2 OF 3)
STRUCTURE NO. 101-0210 & 101-0211

SHEET 63 OF 92 SHEETS

F.A.I. RTE.	SECTION	COUNTY	TOTAL SHEETS	SHEET NO.
39	(201-3)R & (4-1, 5)R	WINNEBAGO	1685	666

CONTRACT NO. 64C24

ILLINOIS | FED. AID PROJECT

2/11/2025 9:35:48 AM

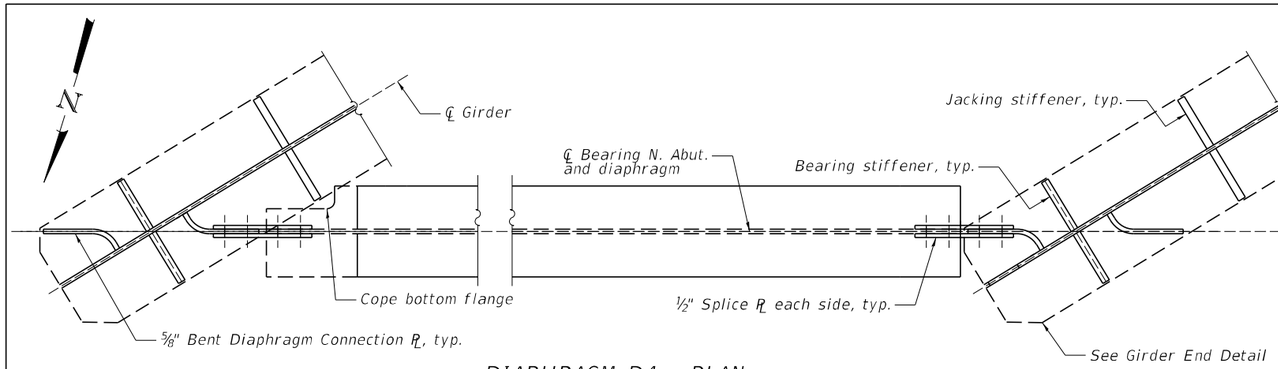

DIAPHRAGM D4 - PLAN

(Diaphragm D5 similar, with splice)

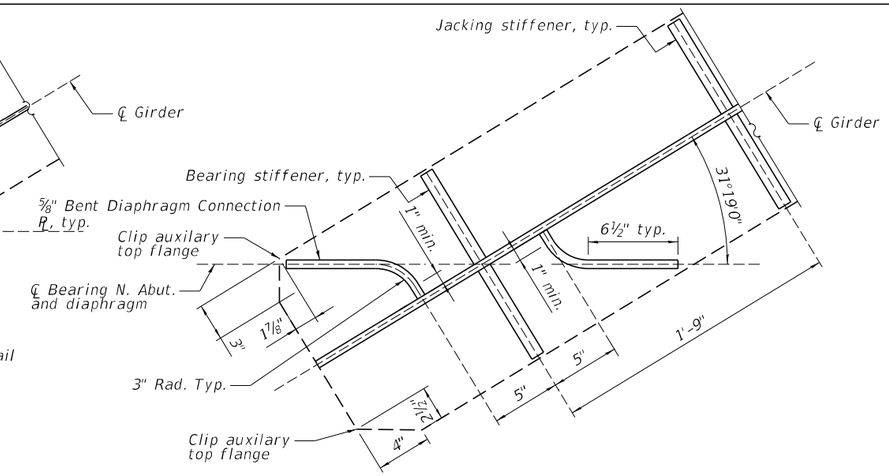

GIRDER END DETAIL

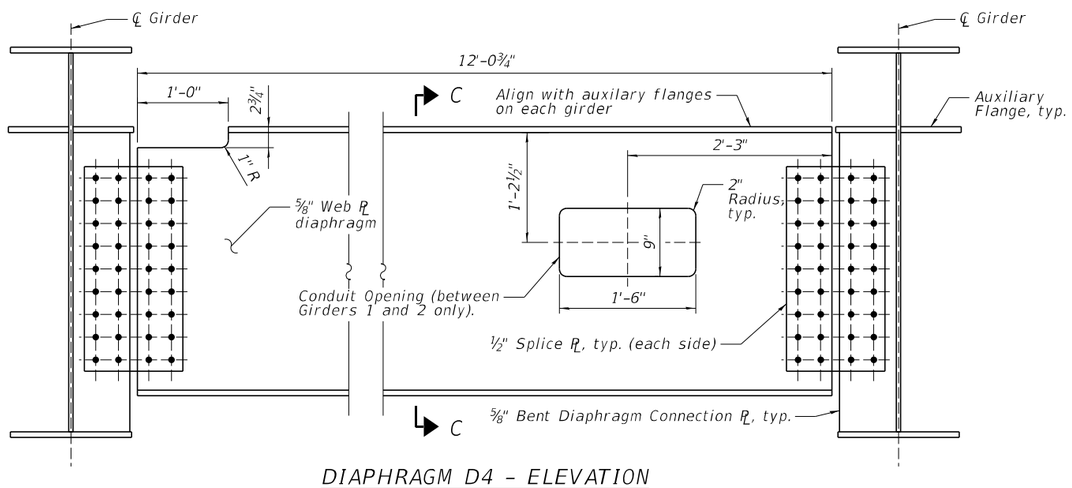

DIAPHRAGM D4 - ELEVATION

(Looking downstation)

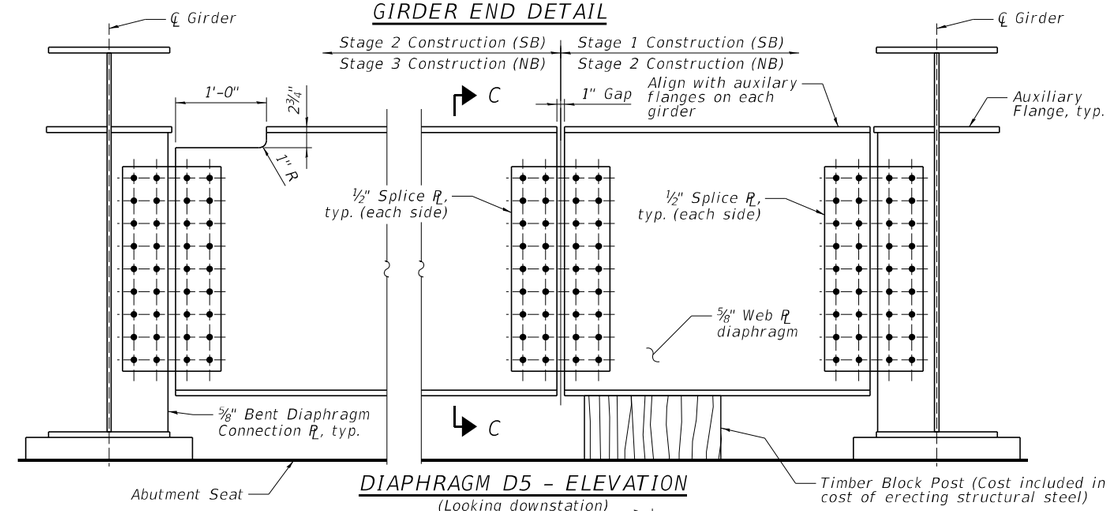

DIAPHRAGM D5 - ELEVATION

(Looking downstation)

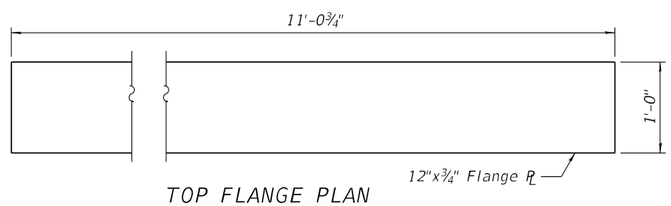

TOP FLANGE PLAN

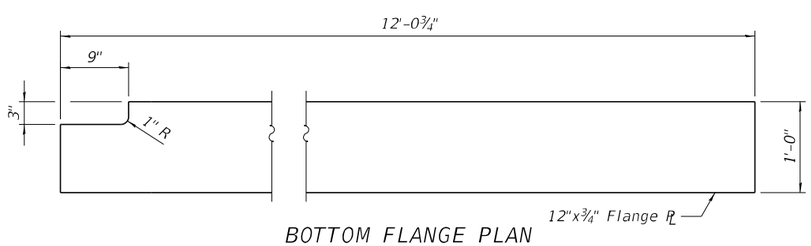

BOTTOM FLANGE PLAN

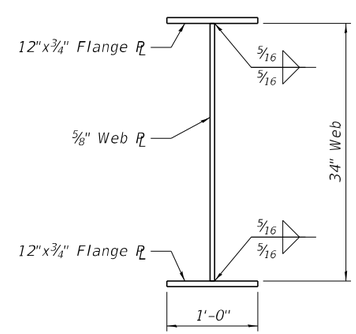

SECTION C-C

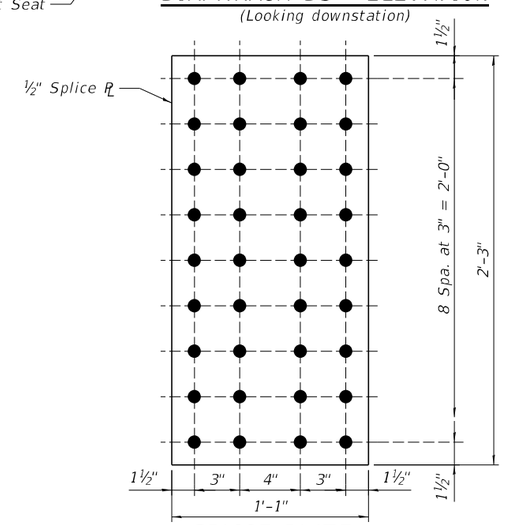

SPLICE PLATE

NOTES:

1. All diaphragms between girders shall be installed with erection pins and bolts in accordance with the erection plan approved by the Engineer. Individual diaphragms at supports may be temporarily disconnected to install bearing anchor rods.
2. For locations of diaphragms, see Sheets 56 and 57 of 92 .
3. For further details on the bent diaphragm connection plates, see Sheet 66 of 92 .
4. Fasteners shall be ASTM F 3125 A325 Type 1, hot dip galvanized bolts. Bolts ⅞" diameter, holes 15/16" diameter. See special provision for "Metallizing of Structural Steel"

MODEL: $MODELNAME
FILE NAME: c:\pwworkdir\benesch projects\projects\d0247003\D264C24-1010210_0211-sht-xframe-3_REV-INSP.dgn

5/16/2025 12:34:19 PM

benesch
Alfred Benesch & Company
35 W Wacker Drive, Suite 3300
Chicago, Illinois 60601
312-565-0150 Job No. 10800

USER NAME =	DESIGNED - AAB	REVISED -	
	CHECKED - JHG	REVISED -	
PLOT SCALE =	DRAWN - KMS	REVISED -	
PLOT DATE =	CHECKED - JHG	REVISED -	

STATE OF ILLINOIS
DEPARTMENT OF TRANSPORTATION

DIAPHRAGM DETAILS (3 OF 3)
STRUCTURE NO. 101-0210 & 101-0211

SHEET 64 OF 92 SHEETS

F.A.I. RTE.	SECTION	COUNTY	TOTAL SHEETS	SHEET NO.
39	(201-3)R & (4-1, 5)R	WINNEBAGO	1685	667
		CONTRACT NO. 64C24		
		ILLINOIS	FED. AID PROJECT	

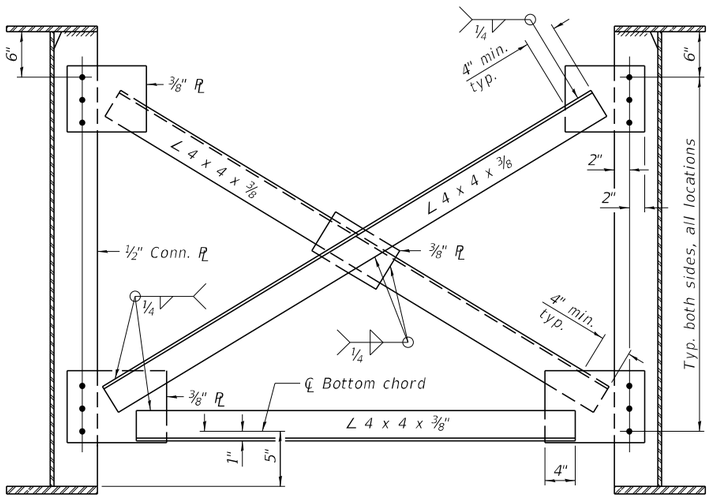

CROSS-FRAME CF1

(240 Total CF1 Locations)

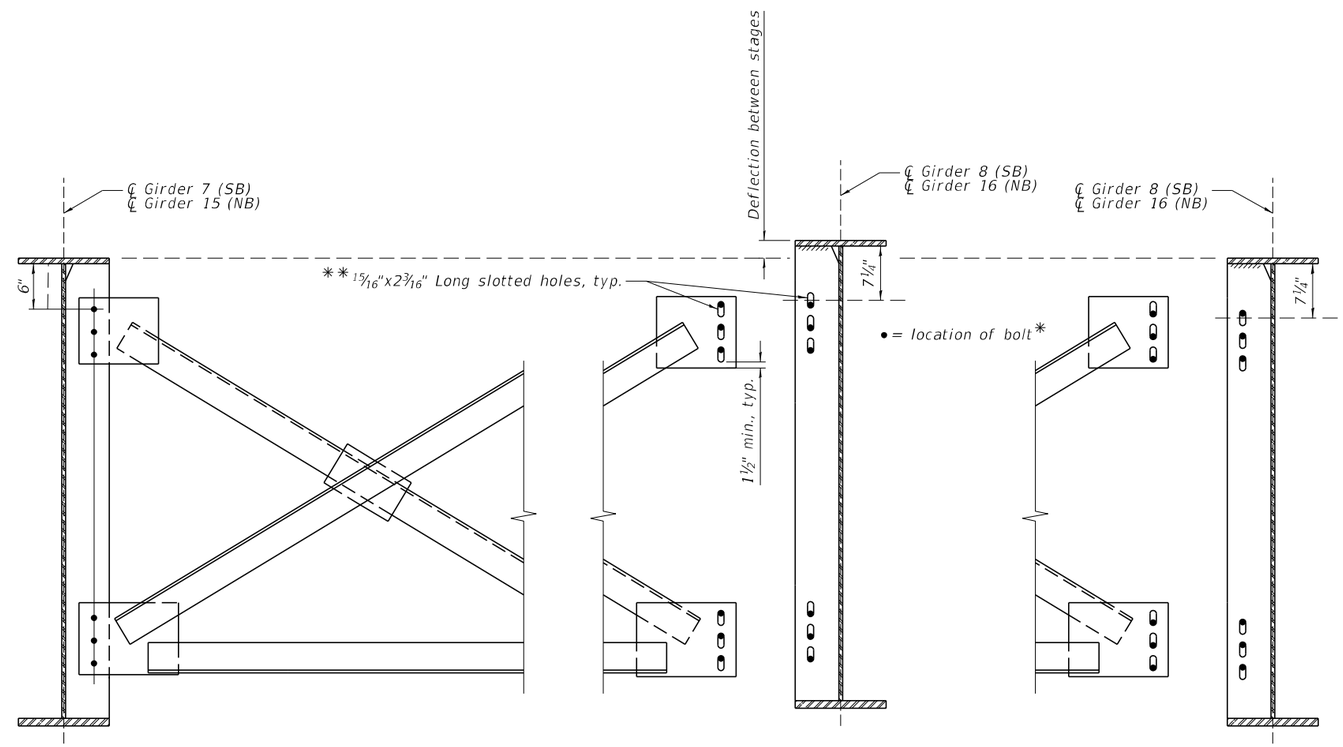

PRIOR TO STAGE 2 DECK POUR (SB)
PRIOR TO STAGE 3 DECK POUR (NB)

AFTER STAGE 2 DECK POUR (SB)
AFTER STAGE 3 DECK POUR (NB)

CROSS-FRAME CF2

(Similar to CF1 Except As Noted Above)
(30 Total CF2 Locations)

* The bolts shall be finger tight until the Stage 2 (SB)/Stage 3 (NB) deck concrete is poured, girders to deflect vertically without stressing the cross frames or previous stage's girders.

** One plate washer required on each side (2 washers total) for each set of slotted holes.

NOTES:

1. All cross frames between girders shall be installed with erection pins and bolts in accordance with the erection plan approved by the Engineer. Individual diaphragms at supports may be temporarily disconnected to install bearing anchor rods.

2. For locations of cross frames, see Sheets 56 and 57 of 92 .

3. Cross frames shall be fitted during the girder erection sequence and shall be detailed for steel dead load fit.

4. Fasteners shall be ASTM F 3125 A325 Type 1, hot dip galvanized bolts. Bolts 7/8" diameter, holes 15/16" diameter. See special provision for "Metallizing of Structural Steel"

MODEL: SMODELNAMES
FILE NAME: c:\pwworkdir\benesch projects\dms65238\D264C24-1010210_0211-sht-xframe-1.dgn

2/11/2025 9:35:55 AM

benesch
Alfred Benesch & Company
35 W Wacker Drive, Suite 3300
Chicago, Illinois 60601
312-565-0450 Job No. 10800

USER NAME =	DESIGNED - AAB	REVISED -	
	CHECKED - JHG	REVISED -	
PLOT SCALE =	DRAWN - KMS	REVISED -	
PLOT DATE =	CHECKED - JHG	REVISED -	

STATE OF ILLINOIS
DEPARTMENT OF TRANSPORTATION

CROSS FRAME DETAILS
STRUCTURE NO. 101-0210 & 101-0211

SHEET 65 OF 92 SHEETS

F.A.I. RTE.	SECTION	COUNTY	TOTAL SHEETS	SHEET NO.
39	(201-3)R & (4-1, 5)R	WINNEBAGO	1685	668
		CONTRACT NO. 64C24		
	ILLINOIS	FED. AID PROJECT		

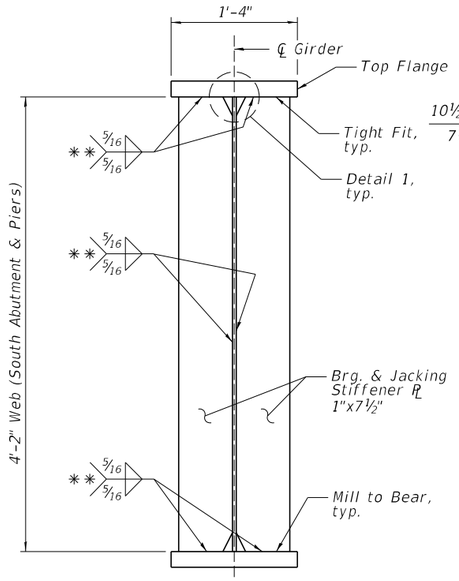

BEARING AND JACKING STIFFENER PLATES

(No. Plates Req'd = 320)

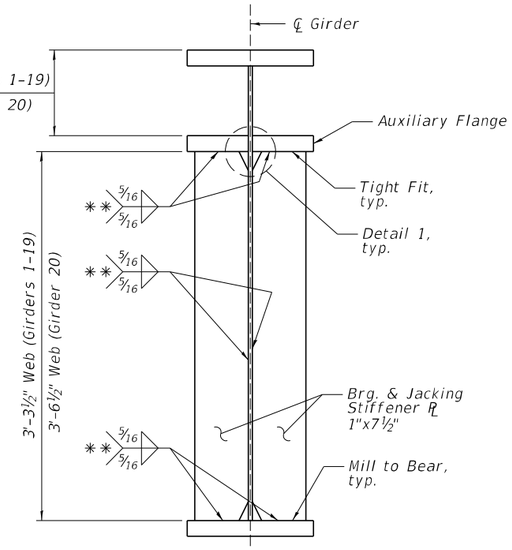

BEARING AND JACKING STIFFENER PLATES – NORTH ABUTMENT ONLY

(No. Plates Req'd = 80)

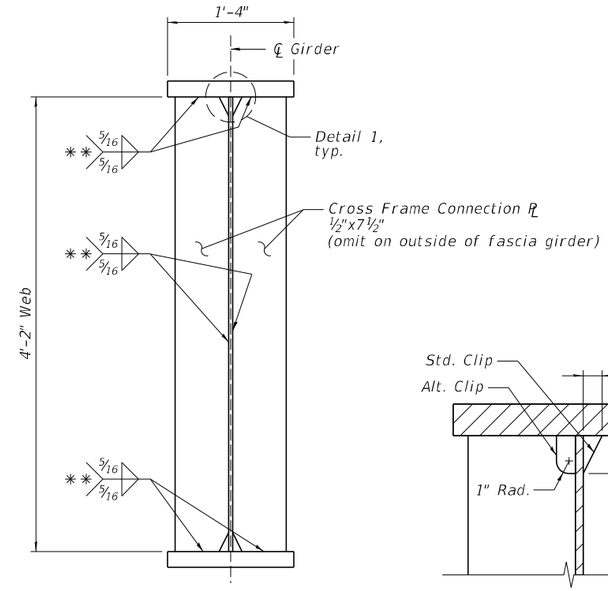

CONNECTION PLATES

(No. Plates Req'd = 540)

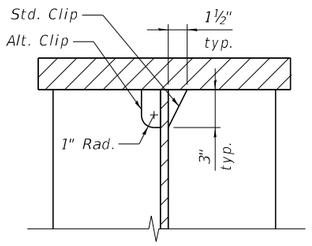

DETAIL 1

(Top and bottom flanges where applicable)

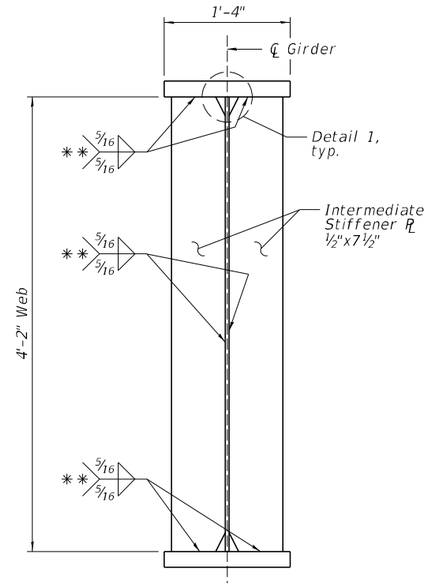

INTERMEDIATE STIFFENER

North Abutment Only
(No. Plates Req'd = 40)

** Terminate weld ¼" (±⅛") from edges of plate

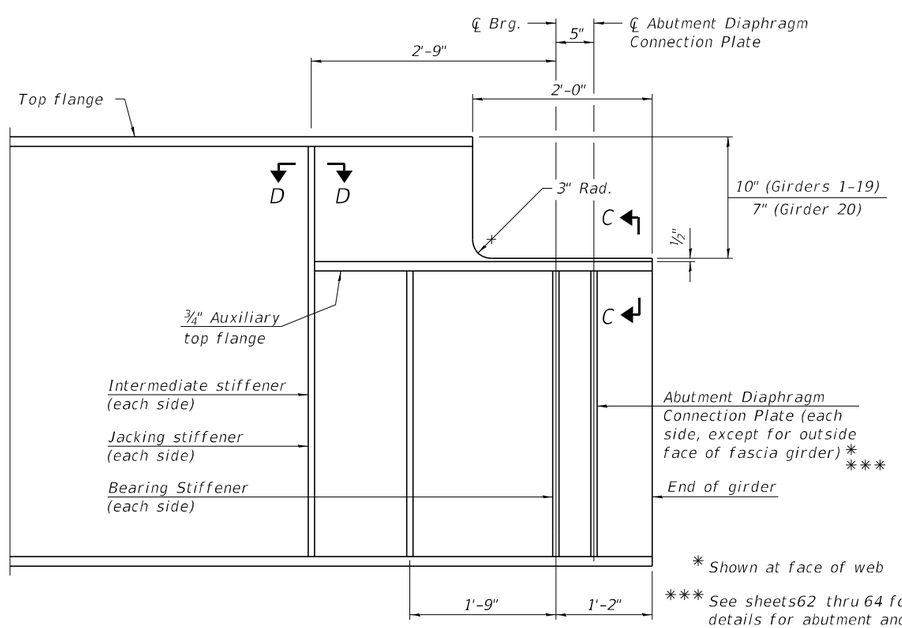

BEAM END AT NORTH ABUTMENT

(End diaphragm girder not shown for clarity)

* Shown at face of web

*** See sheets62 thru 64 for additional details for abutment and pier diaphragm connection plates

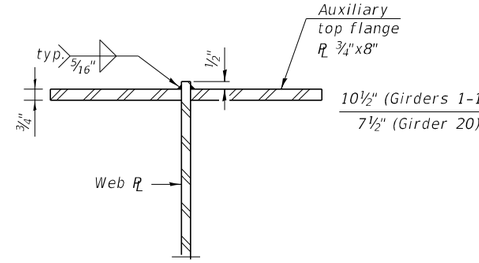

SECTION C-C

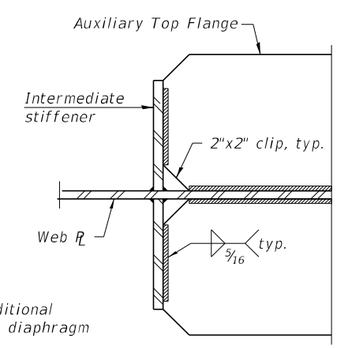

SECTION D-D

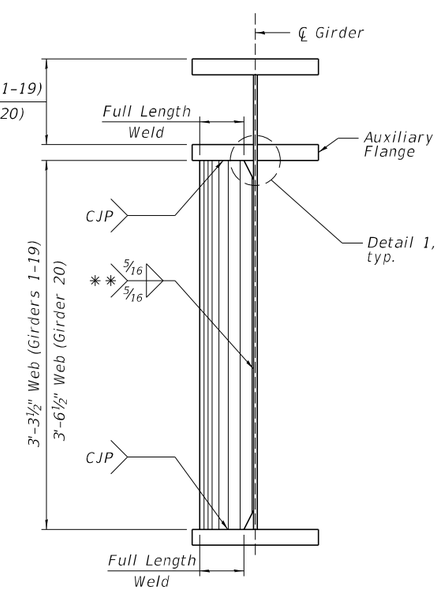

NORTH ABUTMENT DIAPHRAGM CONNECTION PLATES ***

(No. Plates Req'd = 36)

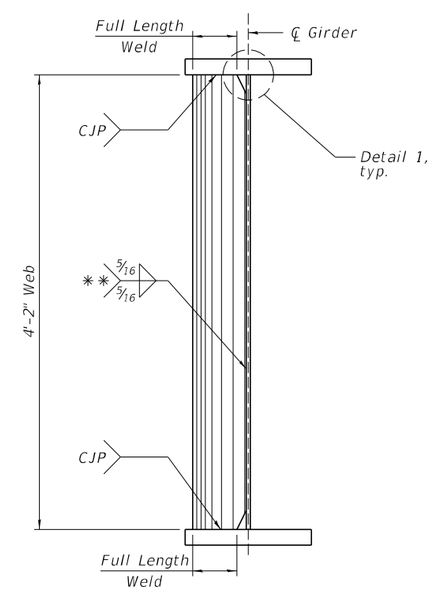

SOUTH ABUTMENT AND PIERS DIAPHRAGM CONNECTION PLATES ***

(No. Plates Req'd = 108)

benesch
Alfred Benesch & Company
35 W Wacker Drive, Suite 3300
Chicago, Illinois 60601
312-969-0450 Job No. 10800

USER NAME =	DESIGNED - AAB	REVISED -	
	CHECKED - JHG	REVISED -	
PLOT SCALE =	DRAWN - KMS	REVISED -	
PLOT DATE =	CHECKED - JHG	REVISED -	

STATE OF ILLINOIS
DEPARTMENT OF TRANSPORTATION

GIRDER DETAILS
STRUCTURE NO. 101-0210 & 101-0211

SHEET 66 OF 92 SHEETS

F.A.I. RTE.	SECTION	COUNTY	TOTAL SHEETS	SHEET NO.
39	(201-3)R & (4-1, 5)R	WINNEBAGO	1685	669
		CONTRACT NO. 64C24		
		ILLINOIS	FED. AID PROJECT	

MODEL: sMODELNAME
FILE NAME: c:\pwworkdir\benesch projects\projects\dms65238\D264C24-1010210_0211-sht-girderdtls.dgn

2/11/2025 9:35:57 AM

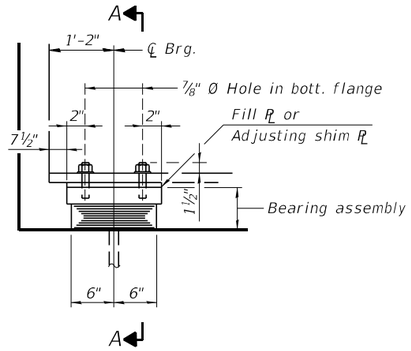

ELEVATION AT SOUTH ABUT.

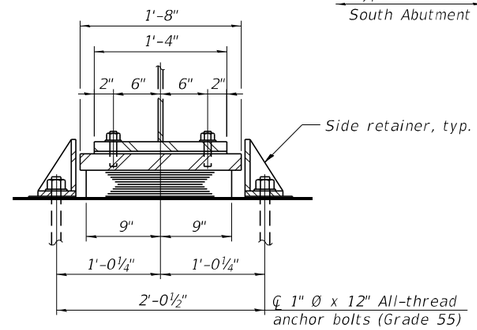

SECTION A-A

TYPE I ELASTOMERIC EXP. BRG.

Type I Details — South Abutment | Type II Details — North Abutment

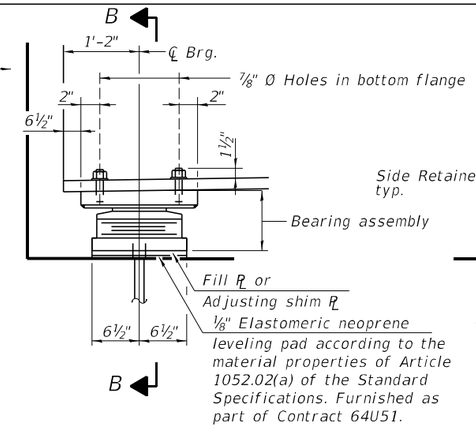

ELEVATION AT NORTH ABUT.

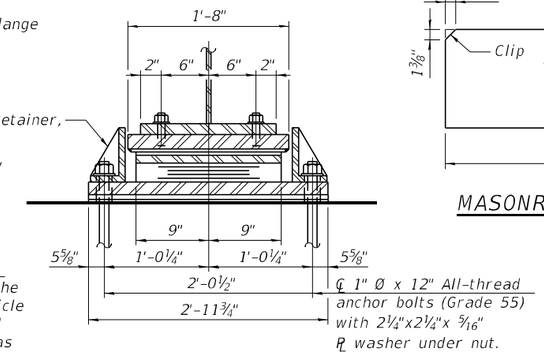

SECTION B-B

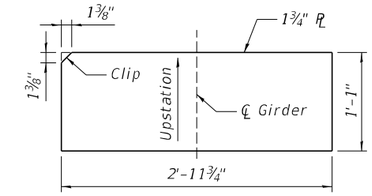

MASONRY PLATE PLAN

TYPE II ELASTOMERIC EXP. BRG.

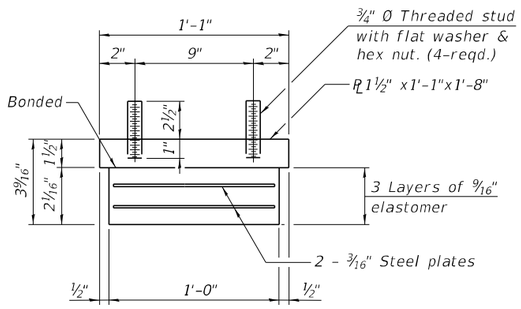

BEARING ASSEMBLY

Note:
Shim plates shall not be placed under bearing assembly.

REQUIRED FILL PLATE AT S. ABUT.

Girder	Thickness
5	½"
6	1"
15	¼"

NOTES:

1. Installation of side retainers, shims, and stainless steel plates shall be included in the cost of Erecting Elastomeric Bearing Assembly, Type I.
2. Two ⅛" adjusting shims shall be furnished as part of Contract 64U51 for each bearing in addition to all other plates or shims and placed as shown on bearing details.
3. Anchor bolts and side retainers at all supports shall be installed as each member is erected unless an equivalent temporary means of lateral restraint is used.
4. All (embedded and separate) bearing plates, side retainers, anchor bolts, nuts, washers, and pintles shall be galvanized according to AASHTO M111 or M232 as applicable.
5. The structural steel plates of the bearing assembly shall conform to the requirements of AASHTO M270 Grade 50.

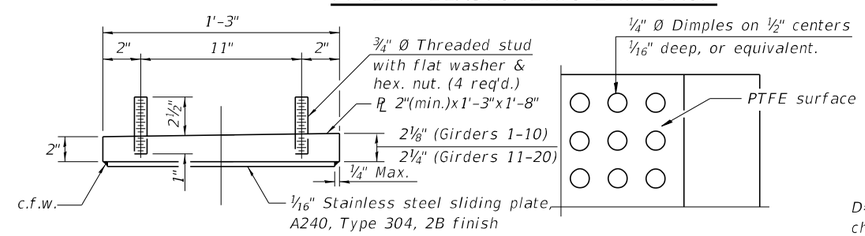

TOP BEARING ASSEMBLY

PLAN-PTFE SURFACE

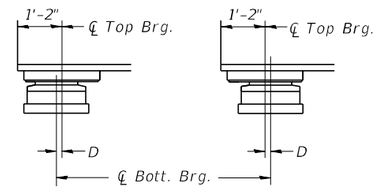

BELOW 50°F. ABOVE 50°F.
D=⅛" per each 100' of expansion for every 15° temp. change from the normal temp. of 50°F.

EXPANSION BEARING ORIENTATION

The above diagrams are for informational purposes only to show the amount of expected offset "D" for the current temperature in the field.

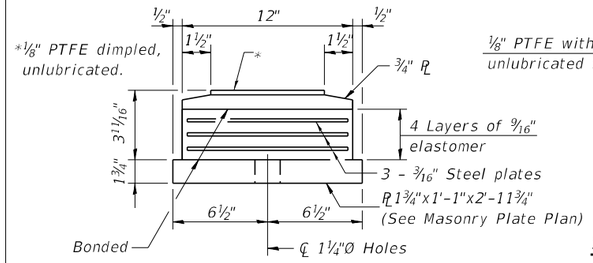

BOTTOM BEARING ASSEMBLY

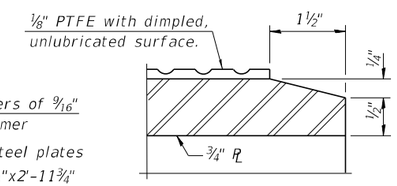

SECTION THRU PTFE

NOTES:

1. Installation of side retainers, shims, and leveling pad required for the elastomeric bearing assembly shall be included in the cost of Erecting Elastomeric Bearing Assembly, Type II.
2. The ⅛" PTFE sheet shall be bonded directly to the top steel plate with a two-component, medium viscosity epoxy resin, conforming to the requirements of the Federal Specification MMM-A-134, Type I. The bond agent shall be applied on the full area of the contact surfaces.
3. Bonding of ⅛" PTFE sheet during vulcanizing process will be permitted provided the process and method of adjusting assembly height is approved by the Engineer.
4. Anchor bolts and side retainers at all supports shall be installed as each member is erected unless an equivalent temporary means of lateral restraint is used.
5. All (embedded and separate) bearing plates, side retainers, anchor bolts, nuts, washers, and pintles shall be galvanized according to AASHTO M111 or M232 as applicable.
6. Two ⅛" adjusting shims shall be furnished as part of Contract 64U51 for each bearing in addition to all other plates or shims and placed as shown on bearing details.
7. The structural steel plates of the bearing assembly shall conform to the requirements of AASHTO M270 Grade 50.

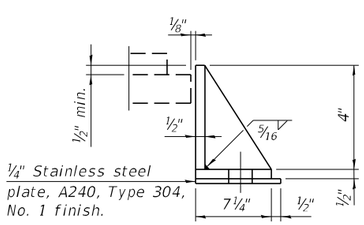

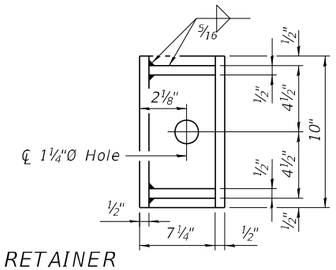

SIDE RETAINER

Equivalent rolled angle with stiffeners will be allowed in lieu of welded plates.

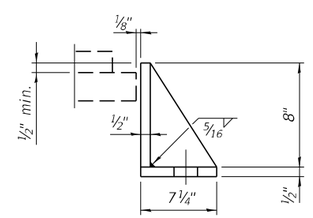

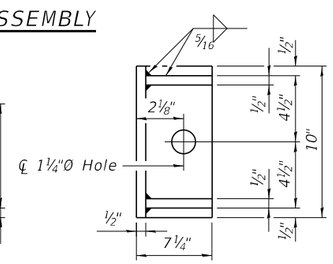

SIDE RETAINER

Equivalent rolled angle with stiffeners will be allowed in lieu of welded plates.

REQUIRED FILL PLATE AT N. ABUT.

Girder	Thickness
2	½"
4	½"
5	⅜"
12	⅝"
13	⅜"

BILL OF MATERIAL SB (SN 101-0210)

Item	Unit	Total
Erecting Elastomeric Bearing Assembly Type I	Each	10
Anchor Bolts, 1"	Each	20

BILL OF MATERIAL NB (SN 101-0211)

Item	Unit	Total
Erecting Elastomeric Bearing Assembly Type I	Each	10
Anchor Bolts, 1"	Each	20

BILL OF MATERIAL SB (SN 101-0210)

Item	Unit	Total
Erecting Elastomeric Bearing Assembly Type II	Each	10
Anchor Bolts, 1"	Each	20

BILL OF MATERIAL NB (SN 101-0211)

Item	Unit	Total
Erecting Elastomeric Bearing Assembly Type II	Each	10
Anchor Bolts, 1"	Each	20

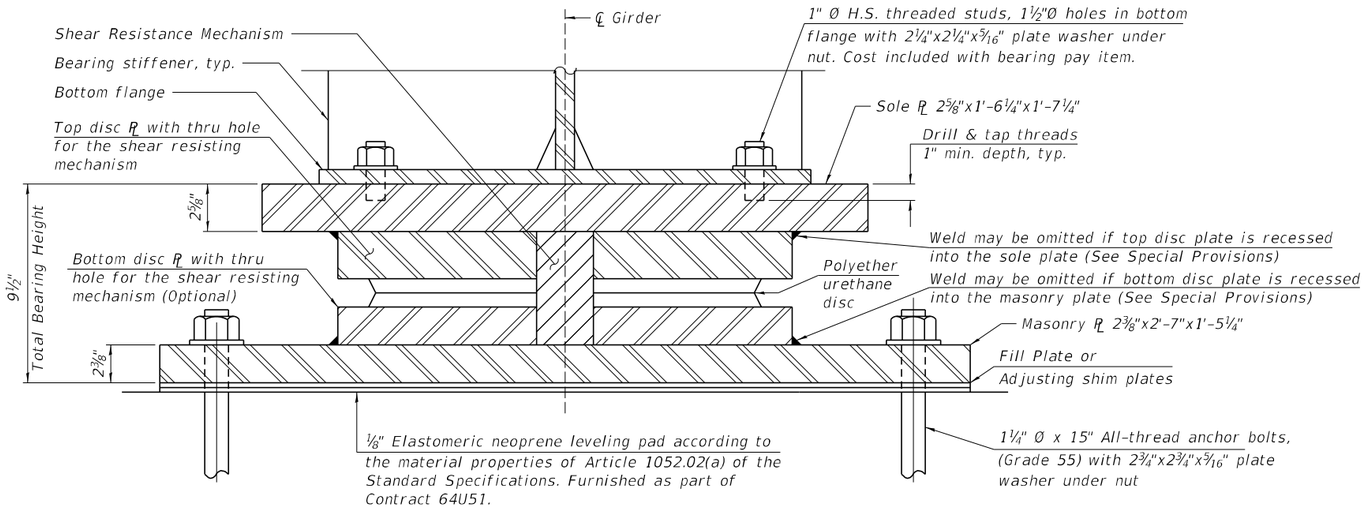

SECTION THRU BEARING

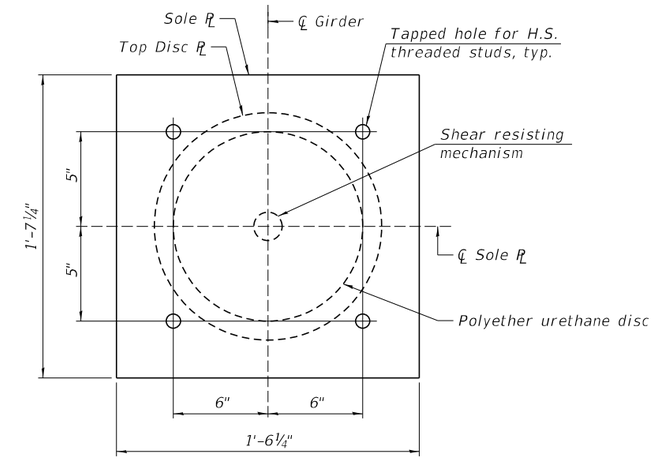

SOLE PLATE AND TOP DISC PLATE PLAN

DESIGN DATA

Unfactored Vertical Dead Load Reaction (R_{DC})	240	kips
Unfactored Vertical Wearing Surface Reaction (R_{DW})	56	kips
Unfactored Vertical Live Load without Impact Reaction (R_{LL})	210	kips
Maximum Strength or Extreme Event Lateral Reaction (H_u)	74	kips
Maximum Strength Limit State Rotation (Θ_u according to Article 14.4.2.2)	0.022	rad
Service I Factored Lateral Reaction	59.2	kips
Service I Rotation	0.021	rad
Service I Factored Vertical Reaction	506	kips
Strength I Factored Vertical Reaction	822	kips

Service I Load Factors = 1.0DC + 1.0DW + 1.00LL
Strength I Load Factors = 1.25DC + 1.5DW + 1.75LL + 1.2TU
Extreme Event Load Factors = 1.0EQ

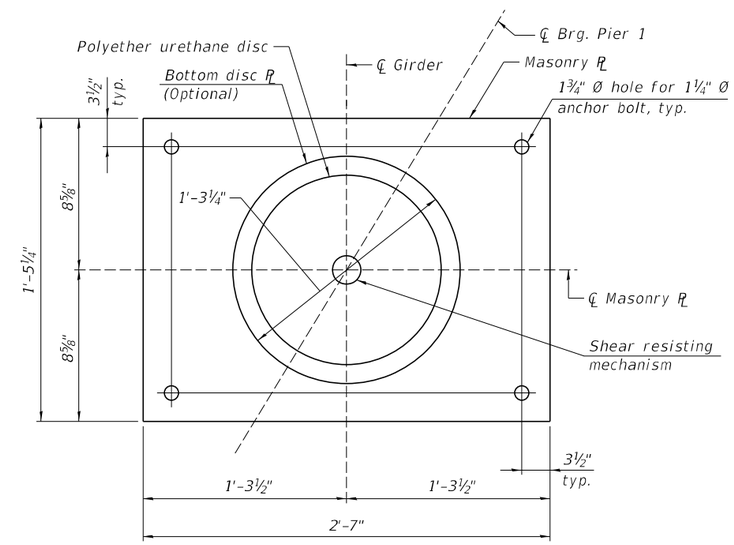

MASONRY PLATE AND BOTTOM DISC PLATE PLAN

NOTES:

1. Two ⅛ in. adjusting shims shall be furnished as part of Contract 64U51 for each bearing in addition to all other plates or shims and placed as shown on bearing details. Shim plates not included in total bearing height.

2. Total bearing height is estimated based on manufacturer data. Actual bearing height may differ from contract plans. The Contractor shall be responsible for verifying bearing heights and adjusting seat elevations, if required, prior to placing pier or abutment concrete.

3. The structural steel plates of the bearing assembly shall conform to the requirements of AASHTO M270 Grade 50.

4. All (embedded and separate) bearing plates, side retainers, anchor bolts, nuts, washers and pintles shall be galvanized according to AASHTO M111 or M232 as applicable.

5. Installation of shims and leveling pad shall be included in the cost of Erecting High Load Multi-Rotational Bearings, Disc, Fixed-600K.

REQUIRED FILL PLATE AT PIER 1

Girder	Thickness
5	⅛"
14	⅛"
15	¾"

BILL OF MATERIAL SB (SN 101-0210)

	Item	Unit	Total
*	Erecting High Load Multi-Rotational Bearings, Disc, Fixed-600K	Each	10
	Anchor Bolts, 1¼"	Each	40

BILL OF MATERIAL NB (SN 101-0211)

	Item	Unit	Total
*	Erecting High Load Multi-Rotational Bearings, Disc, Fixed-600K	Each	10
	Anchor Bolts, 1¼"	Each	40

* The value specified in the pay item name is an approximate vertical load capacity that is used for letting and bidding purposes only. Exact bearing capacity will vary subject to final design.

DESIGN DATA

Unfactored Vertical Dead Load Reaction (R_{DC})	240	kips
Unfactored Vertical Wearing Surface Reaction (R_{DW})	56	kips
Unfactored Vertical Live Load without Impact Reaction (R_{LL})	210	kips
Maximum Strength or Extreme Event Lateral Reaction (H_U)	74.0	kips
Maximum Strength Limit State Rotation (Θ_u according to Article 14.4.2.2)	0.022	rad
Unfactored Design Thermal Movement from 50° F (ΔT)	0.85	in.
Service I Factored Lateral Reaction	59.2	kips
Service I Rotation	0.021	rad
Strength I Factored Longitudinal Movement	1.02	in.
Service I Factored Vertical Reaction	506	kips
Strength I Factored Vertical Reaction	822	kips

Service I Load Factors = 1.0DC + 1.0DW + 1.00LL
Strength I Load Factors = 1.25DC + 1.5DW + 1.75LL + 1.2TU
Extreme Event Load Factors = 1.0EQ

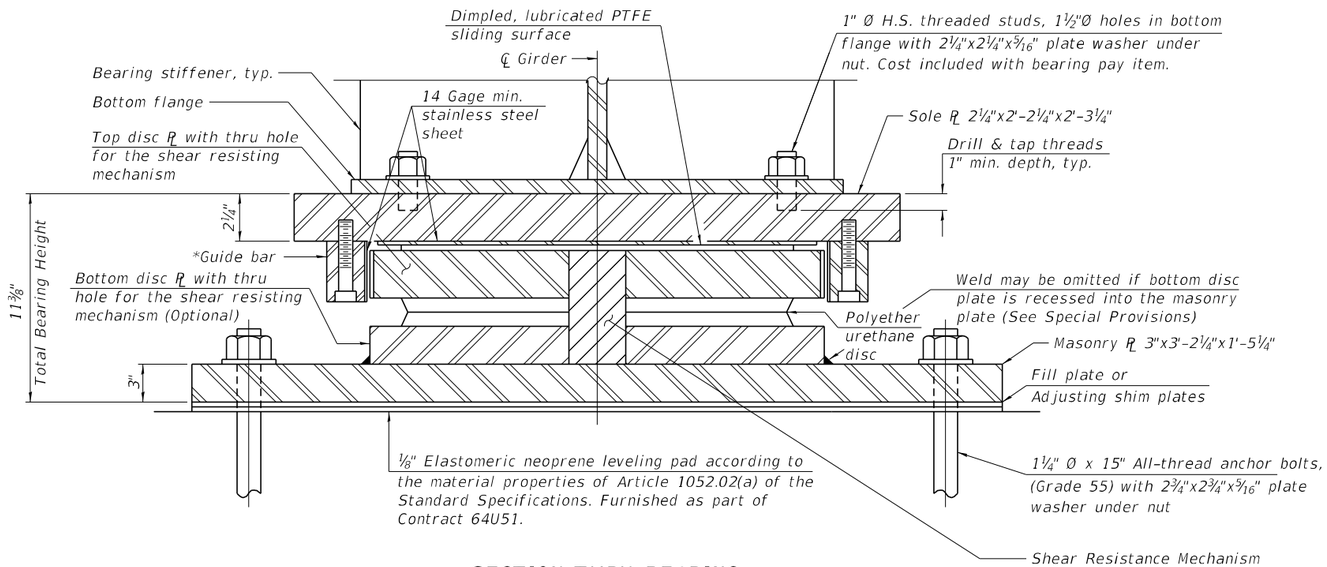

SECTION THRU BEARING

*As alternates to the bolted connection shown, the guide bars may be connected to the sole plate by groove welds or the guide bars and sole plate may be fabricated as a single piece.

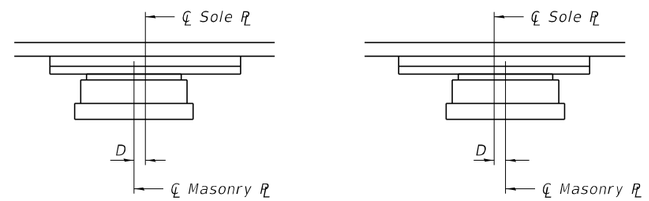

BELOW 50°F.
(Move masonry PL away from fixed bearing)

ABOVE 50°F.
(Move masonry PL toward fixed bearing)

SETTING ANCHOR BOLTS AT EXPANSION BEARING

D=⅛" per each 100' of expansion for every 15° temp. change from the normal temp. of 50° F.

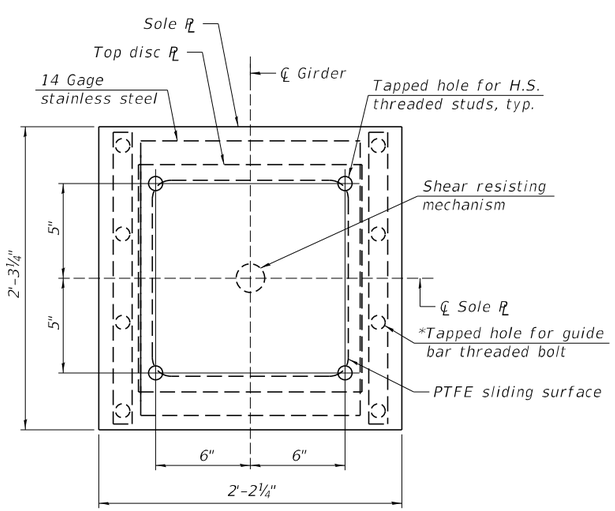

SOLE PLATE AND TOP DISC PLATE PLAN

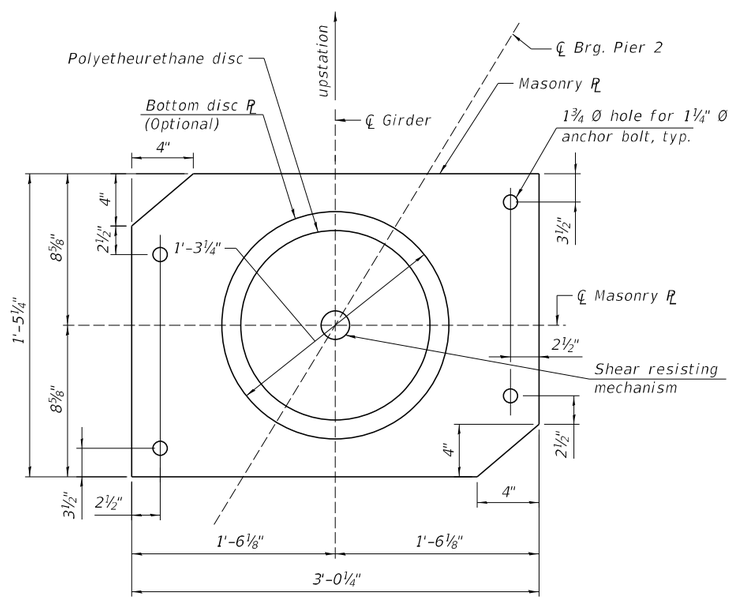

MASONRY PLATE AND BOTTOM DISC PLATE PLAN

REQUIRED FILL PLATE AT PIER 2

Girder	Thickness
4	1"
5	1½"
6	⅜"
12	⅜"
13	¾"
14	⅞"
15	⅝"

NOTES:

1. Two ⅛ in. adjusting shims shall be furnished as part of Contract 64U51 for each bearing in addition to all other plates or shims and placed as shown on bearing details. Shim plates not included in total bearing height.

2. Total bearing height is estimated based on manufacturer data. Actual bearing height may differ from contract plans. The Contractor shall be responsible for verifying bearing heights and adjusting seat elevations, if required, prior to placing pier or abutment concrete.

3. The structural steel plates of the bearing assembly shall conform to the requirements of AASHTO M270 Grade 50.

4. All (embedded and separate) bearing plates, side retainers, anchor bolts, nuts, washers and pintles shall be galvanized according to AASHTO M111 or M232 as applicable.

5. Installation of shims and leveling pad shall be included in the cost of Erecting High Load Multi-Rotational Bearings, Disc, Guided-Expansion-600K.

BILL OF MATERIAL SB (SN 101-0210)

	Item	Unit	Total
**	Erecting High Load Multi-Rotational Bearings, Disc, Guided Expansion-600K	Each	10
	Anchor Bolts, 1¼"	Each	40

BILL OF MATERIAL NB (SN 101-0211)

	Item	Unit	Total
**	Erecting High Load Multi-Rotational Bearings, Disc, Guided Expansion-600K	Each	10
	Anchor Bolts, 1¼"	Each	40

** The value specified in the pay item name is an approximate vertical load capacity that is used for letting and bidding purposes only. Exact bearing capacity will vary subject to final design.

MODEL: $MODELNAMES
FILE NAME: c:\pwworkdir\benesch projects\projects\d0247003\D264C24-1010210_0211-sht-bearing-2_REV-INSP.dgn

benesch
Alfred Benesch & Company
35 W Wacker Drive, Suite 3300
Chicago, Illinois 60601
312-565-0450 Job No. 10800

USER NAME =	DESIGNED - AAB	REVISED -	
	CHECKED - JHG	REVISED -	
PLOT SCALE =	DRAWN - KMS	REVISED -	
PLOT DATE =	CHECKED - JHG	REVISED -	

STATE OF ILLINOIS
DEPARTMENT OF TRANSPORTATION

GUIDED EXPANSION HLMR DISC BEARING DETAILS - PIER 2
STRUCTURE NO. 101-0210 & 101-0211

SHEET 69 OF 92 SHEETS

F.A.I. RTE.	SECTION	COUNTY	TOTAL SHEETS	SHEET NO.
39	(201-3)R & (4-1, 5)R	WINNEBAGO	1685	672

CONTRACT NO. 64C24
ILLINOIS FED. AID PROJECT

5/20/2025 8:25:15 AM

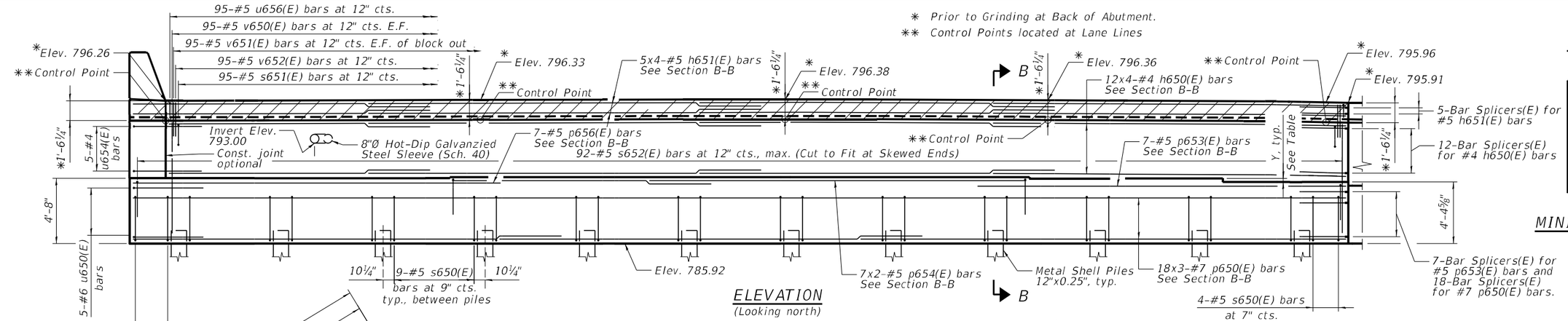

ELEVATION
(Looking north)

SEAT ELEVATIONS & STEP HEIGHTS

Girder	Elev.	Y
1	790.59	-
2	790.59	-
3	790.67	1"
4	790.67	-
5	790.67	-
6	790.56	-1⅜"
7	790.31	-3"

MINIMUM LAP LENGTH

#4 Bar = 2'-11"
#5 Bar = 3'-7"
#7 Bar = 5'-0"

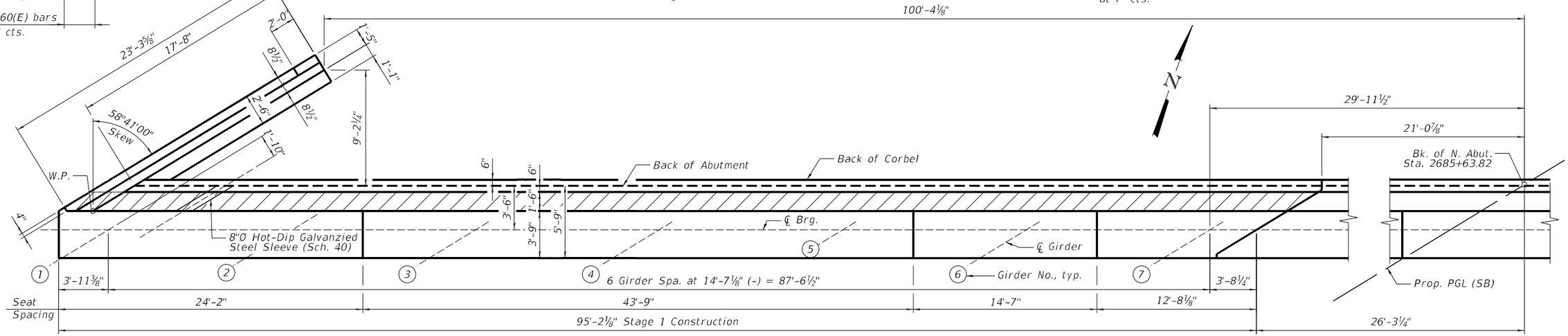

TOP VIEW

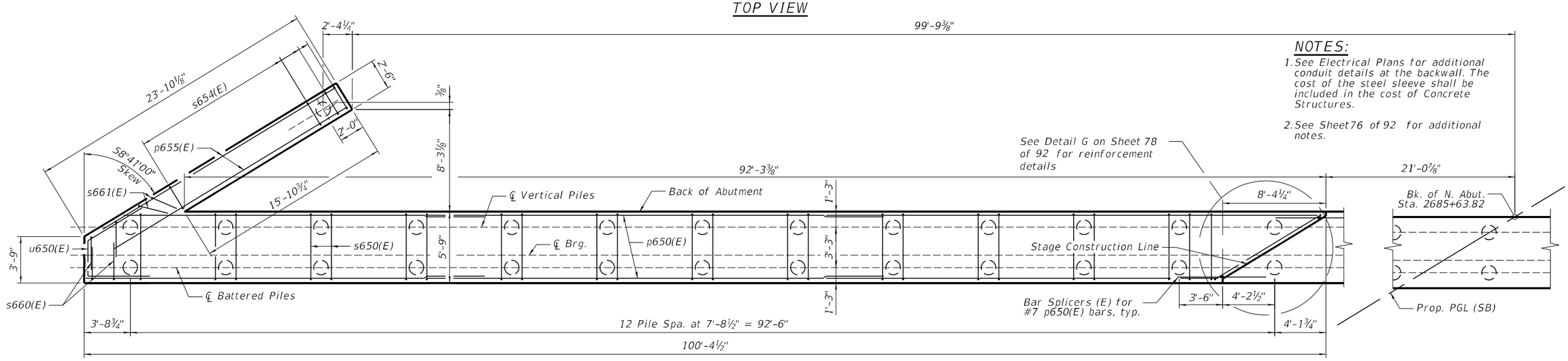

PLAN - PILE CAP

NOTES:

1. See Electrical Plans for additional conduit details at the backwall. The cost of the steel sleeve shall be included in the cost of Concrete Structures.
2. See Sheet 76 of 92 for additional notes.

MODEL: $MODELNAMES
FILE NAME: c:\pwworkdir\benesch projects\dms65238\D264C24-1010210_0211-sht-nabut1.dgn
2/11/2025 9:36:09 AM

benesch
Alfred Benesch & Company
35 W Wacker Drive, Suite 3300
Chicago, Illinois 60601
312-565-0150 Job No. 10800

USER NAME =	DESIGNED - WKK	REVISED -	
	CHECKED - MFH	REVISED -	
PLOT SCALE =	DRAWN - KMS	REVISED -	
PLOT DATE =	CHECKED - MFH	REVISED -	

STATE OF ILLINOIS
DEPARTMENT OF TRANSPORTATION

NORTH ABUTMENT PLAN AND ELEVATION (STAGE 1)
STRUCTURE NO. 101-0210 & 101-0211

SHEET 70 OF 92 SHEETS

F.A.I. RTE.	SECTION	COUNTY	TOTAL SHEETS	SHEET NO.
39	(201-3)R & (4-1, 5)R	WINNEBAGO	1685	673
		CONTRACT NO. 64C24		
		ILLINOIS	FED. AID PROJECT	

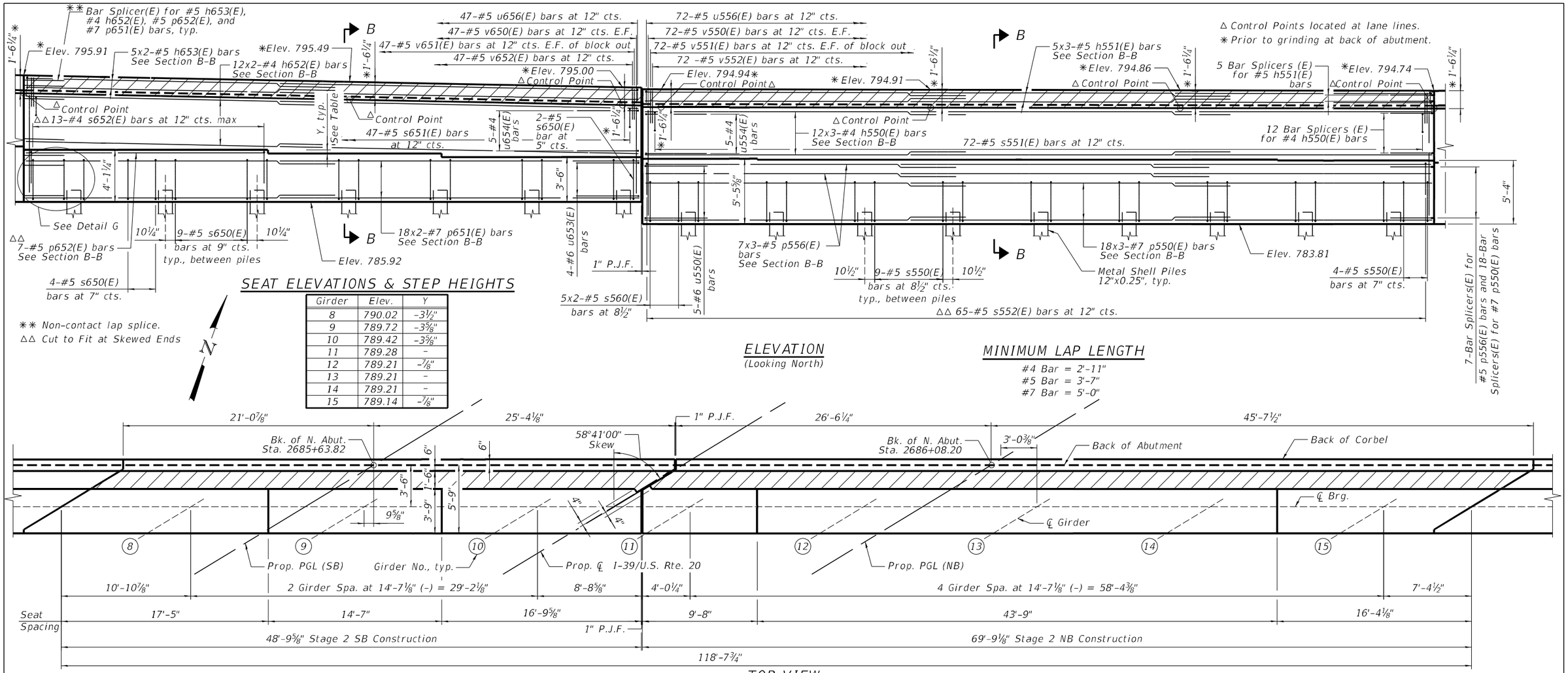

SEAT ELEVATIONS & STEP HEIGHTS

Girder	Elev.	Y
8	790.02	-3½"
9	789.72	-3⅝"
10	789.42	-3⅜"
11	789.28	-
12	789.21	-⅞"
13	789.21	-
14	789.21	-
15	789.14	-⅞"

** Non-contact lap splice.
△△ Cut to Fit at Skewed Ends

N

ELEVATION
(Looking North)

MINIMUM LAP LENGTH

#4 Bar = 2'-11"
#5 Bar = 3'-7"
#7 Bar = 5'-0"

TOP VIEW

NOTES:

1. See Sheet 76 of 92 for additional notes.
2. Control Points are located at lane lines.

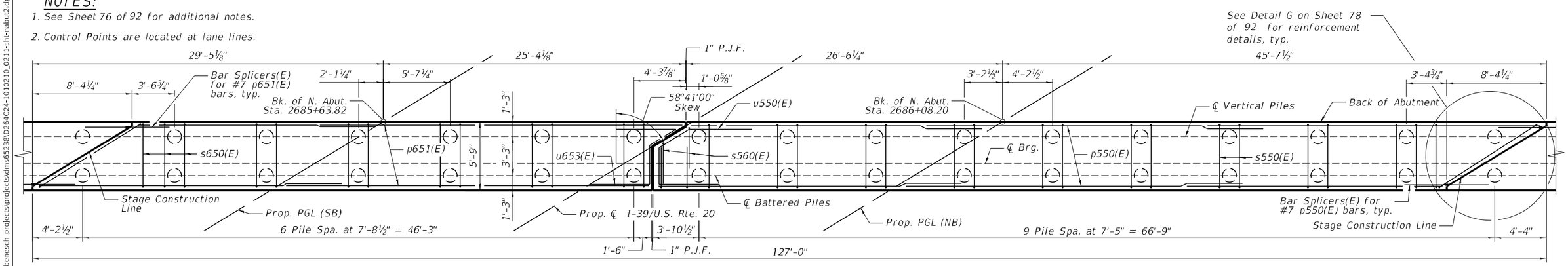

PLAN - PILE CAP

MODEL: sMODELNAMES
FILE NAME: c:\pwworkdir\benesch projects\projects\dms65238\D264C24-1010210_0211-sht-nabut2.dgn

benesch
Alfred Benesch & Company
35 W Wacker Drive, Suite 3300
Chicago, Illinois 60601
312-565-0450 Job No. 10800

USER NAME =	DESIGNED - WKK	REVISED -	
	CHECKED - MFH	REVISED -	
PLOT SCALE =	DRAWN - KMS	REVISED -	
PLOT DATE =	CHECKED - MFH	REVISED -	

STATE OF ILLINOIS
DEPARTMENT OF TRANSPORTATION

NORTH ABUTMENT PLAN AND ELEVATION (STAGE 2)
STRUCTURE NO. 101-0210 & 101-0211

SHEET 71 OF 92 SHEETS

F.A.I. RTE.	SECTION	COUNTY	TOTAL SHEETS	SHEET NO.
39	(201-3)R & (4-1, 5)R	WINNEBAGO	1685	674
		CONTRACT NO. 64C24		
		ILLINOIS	FED. AID PROJECT	

2/11/2025 9:36:11 AM

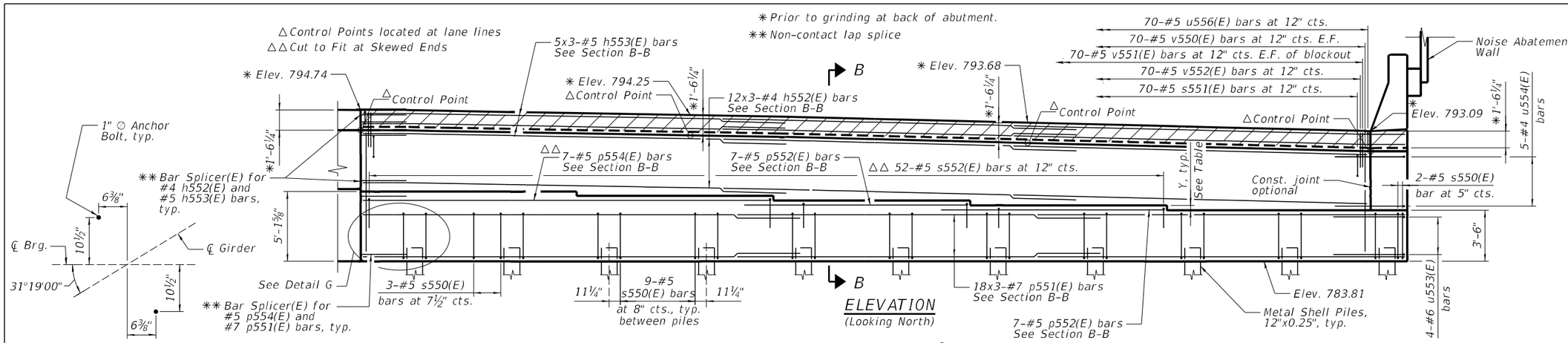

SEAT ELEVATIONS & STEP HEIGHTS

Girder	Elev.	Y
16	788.95	-2¼"
17	788.64	-3¾"
18	788.29	-4¼"
19	787.93	-4⅜"
20	787.31	-7½"

ANCHOR BOLT PLAN

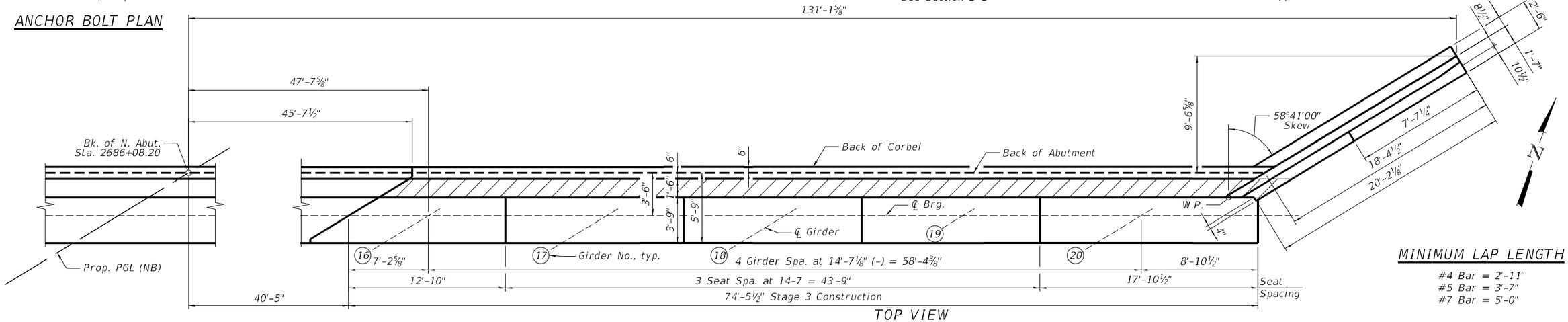

TOP VIEW

MINIMUM LAP LENGTH

#4 Bar = 2'-11"
#5 Bar = 3'-7"
#7 Bar = 5'-0"

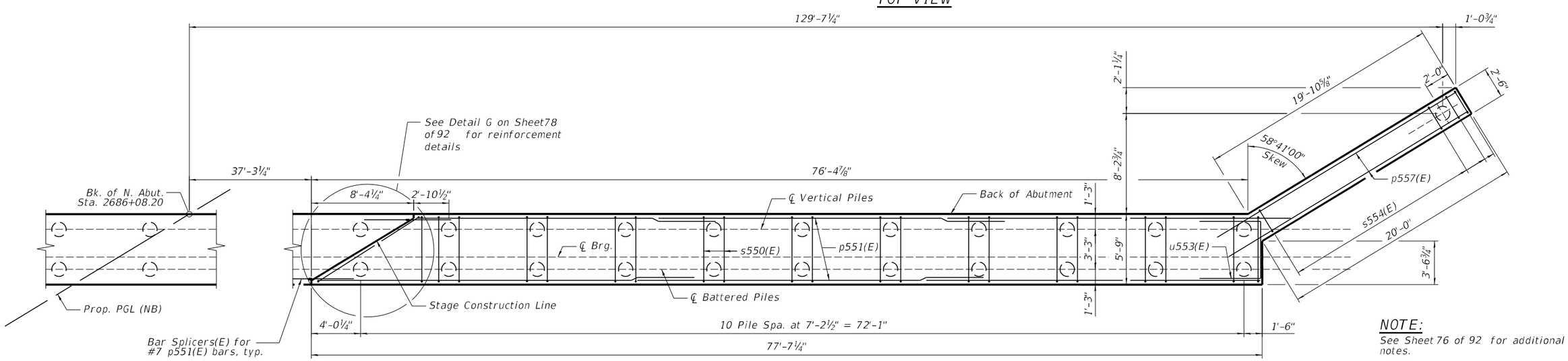

PLAN - PILE CAP

NOTE:

See Sheet 76 of 92 for additional notes.

benesch
Alfred Benesch & Company
35 W Wacker Drive, Suite 3300
Chicago, Illinois 60601
312-565-0150 Job No. 10800

USER NAME =	DESIGNED - WKK	REVISED -	
	CHECKED - MFH	REVISED -	
PLOT SCALE =	DRAWN - KMS	REVISED -	
PLOT DATE =	CHECKED - MFH	REVISED -	

STATE OF ILLINOIS
DEPARTMENT OF TRANSPORTATION

NORTH ABUTMENT PLAN AND ELEVATION (STAGE 3)
STRUCTURE NO. 101-0210 & 101-0211

SHEET 72 OF 92 SHEETS

F.A.I. RTE.	SECTION	COUNTY	TOTAL SHEETS	SHEET NO.
39	(201-3)R & (4-1, 5)R	WINNEBAGO	1685	675
		CONTRACT NO. 64C24		
		ILLINOIS FED. AID PROJECT		

MODEL: SMODELNAMES
FILE NAME: c:\pwworkdir\benesch projects\projects\dms65238\D264C24-1010210_0211-sht-nabut3.dgn
2/11/2025 9:36:14 AM

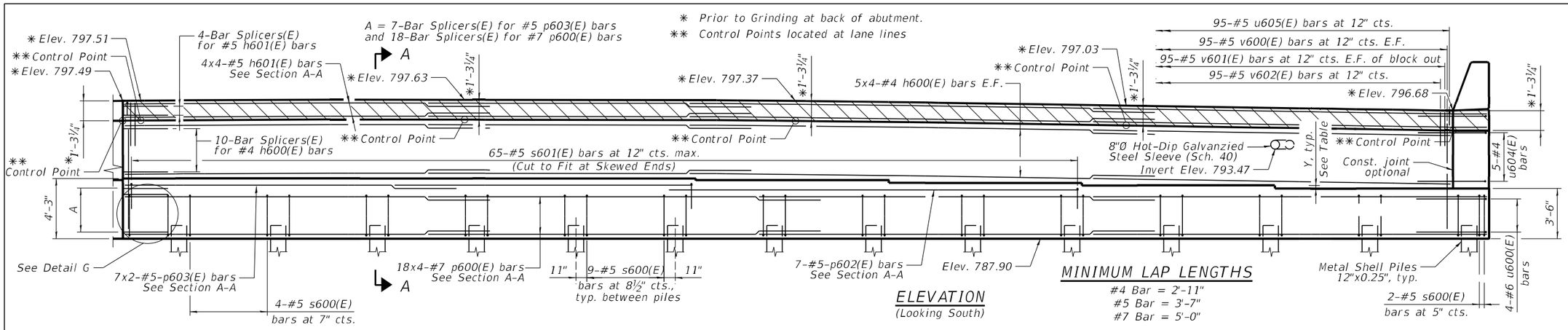

ELEVATION
(Looking South)

MINIMUM LAP LENGTHS
#4 Bar = 2'-11"
#5 Bar = 3'-7"
#7 Bar = 5'-0"

SEAT ELEVATIONS & STEP HEIGHTS

Girder	Elev.	Y
1	791.40	-
2	791.61	2½"
3	791.83	2⅝"
4	792.03	2⅜"
5	792.15	1½"
6	792.15	-
7	792.15	-

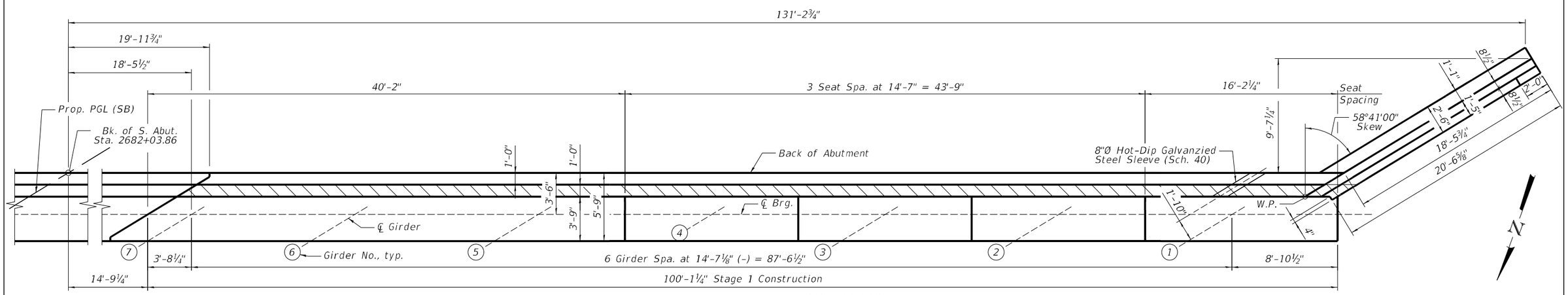

TOP VIEW

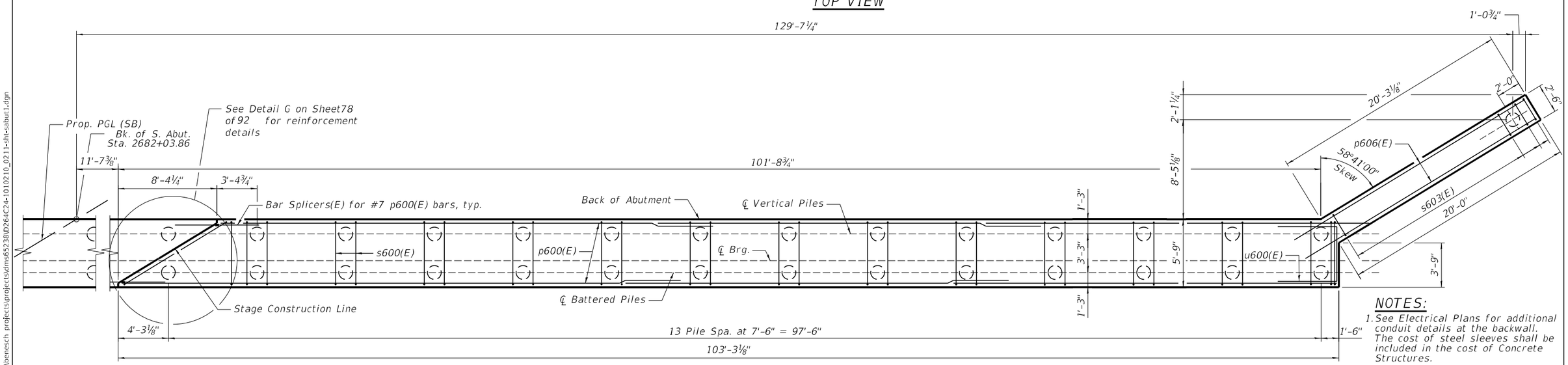

PLAN - PILE CAP

NOTES:

1. See Electrical Plans for additional conduit details at the backwall. The cost of steel sleeves shall be included in the cost of Concrete Structures.
2. See Sheet76 of 92 for additional notes.

SEAT ELEVATIONS & STEP HEIGHTS

A = 7-Bar Splicers(E) for #5 p503(E) bars and 18-Bar Splicers(E) for #7 p500(E) bars

B = 10-Bar Splicers(E) for #4 h500(E) bars

Girder	Elev.	Y
8	792.04	-1⅜"
9	791.91	-1½"
10	791.77	-1⅝"
11	791.78	-
12	791.94	1⅞"
13	792.09	1¾"
14	792.24	1¾"
15	792.32	1"

✱ Prior to grinding at back of abutment.
✱✱ Non-contact lap splice
△ Control points located at lane lines.
△△ Cut to Fit at Skewed Ends

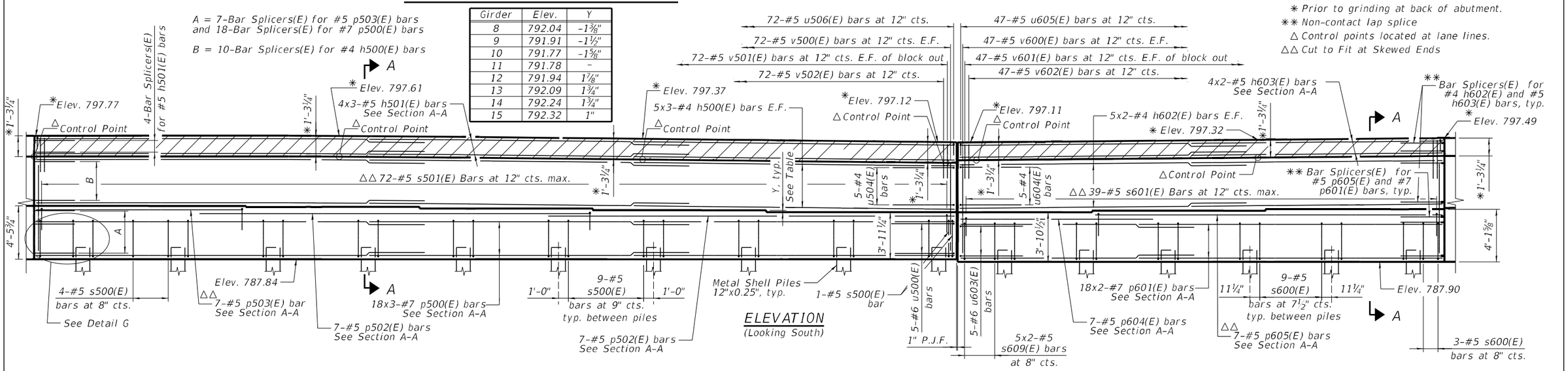

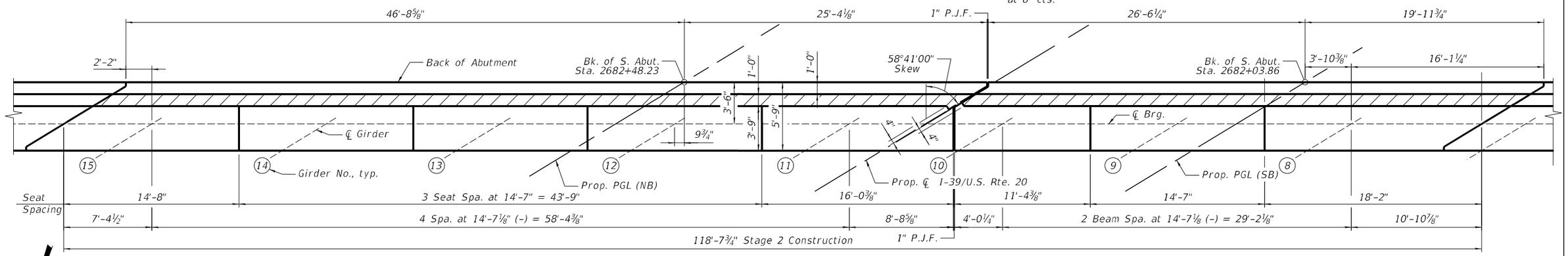

TOP VIEW

MINIMUM LAP LENGTH:

#4 Bar = 2'-11"
#5 Bar = 3'-7"
#7 Bar = 5'-0"

NOTE:

See Sheet 76 of 92 for additional notes.

N

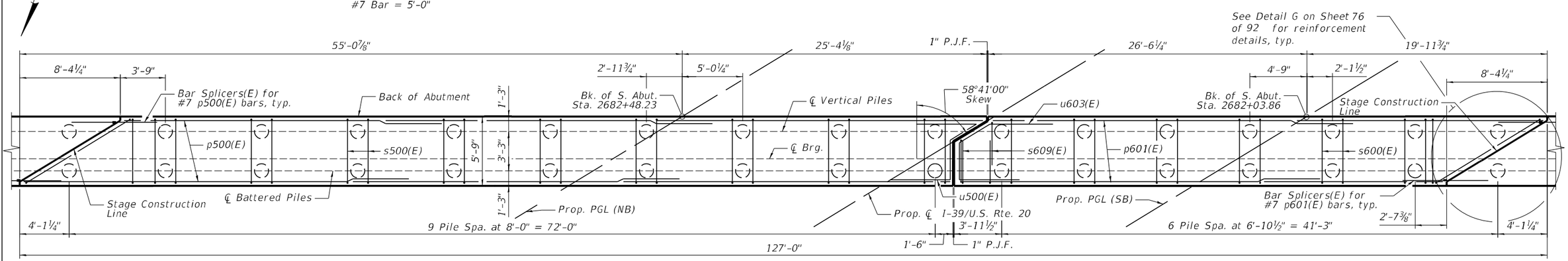

PLAN - PILE CAP

benesch
Alfred Benesch & Company
35 W Wacker Drive, Suite 3300
Chicago, Illinois 60601
312-565-0450 Job No. 10800

USER NAME =	DESIGNED - WKK	REVISED -	
	CHECKED - MFH	REVISED -	
PLOT SCALE =	DRAWN - KMS	REVISED -	
PLOT DATE =	CHECKED - MFH	REVISED -	

STATE OF ILLINOIS
DEPARTMENT OF TRANSPORTATION

SOUTH ABUTMENT PLAN AND ELEVATION (STAGE 2)
STRUCTURE NO. 101-0210 & 101-0211

SHEET 74 OF 92 SHEETS

F.A.I. RTE.	SECTION	COUNTY	TOTAL SHEETS	SHEET NO.
39	(201-3)R & (4-1, 5)R	WINNEBAGO	1685	677
		CONTRACT NO. 64C24		
		ILLINOIS	FED. AID PROJECT	

MODEL: SMODELNAMES
FILE NAME: c:\pwworkdir\benesch projects\dms65238\D264C24-1010210_0211-sht-abut2.dgn
2/11/2025 9:36:20 AM

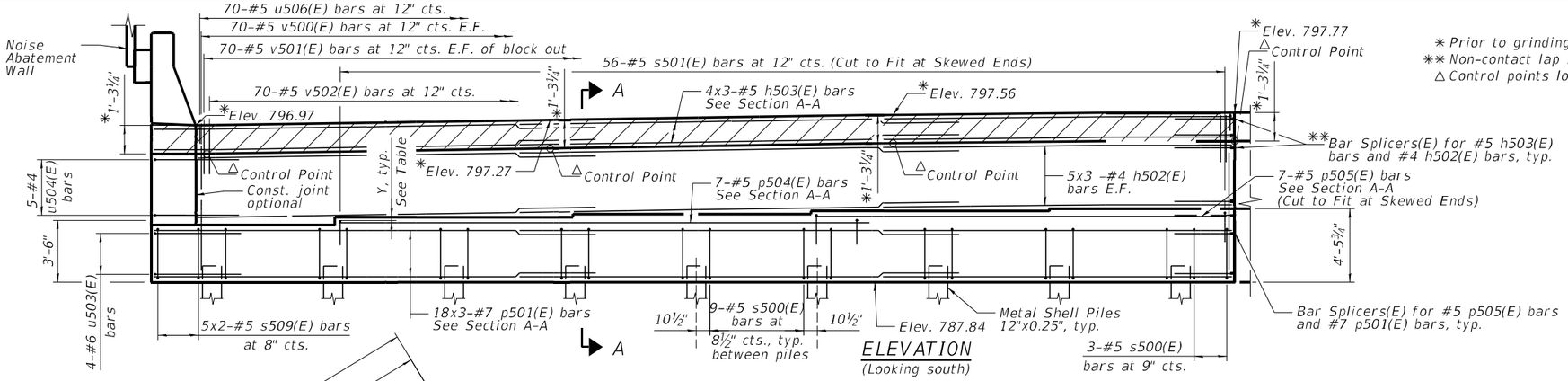

ELEVATION
(Looking south)

∗ Prior to grinding at back of abutment.
∗∗ Non-contact lap splice
△ Control points located at lane lines.

SEAT ELEVATIONS & STEP HEIGHTS

Girder	Elev.	Y
16	792.32	-
17	792.18	-1⅝"
18	792.00	-2⅛"
19	791.81	-2¼"
20	791.34	-5⅝"

MINIMUM LAP LENGTHS

#4 Bar = 2'-11"
#5 Bar = 3'-7"
#7 Bar = 5'-0"

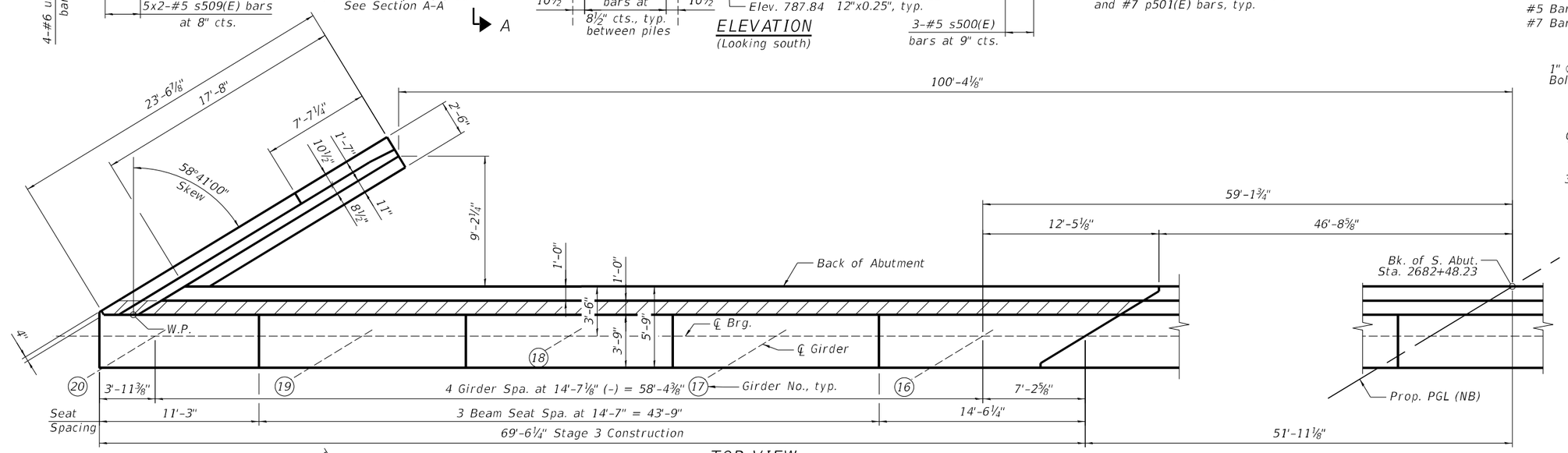

TOP VIEW

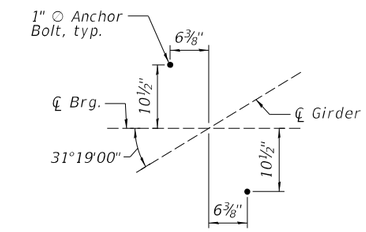

ANCHOR BOLT PLAN

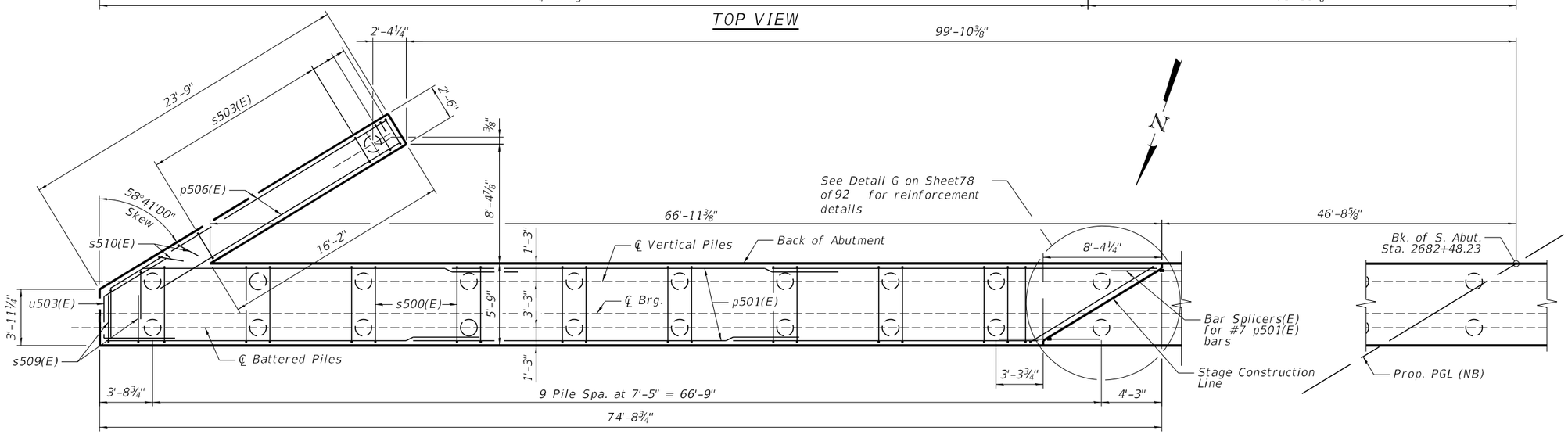

PLAN - PILE CAP

NOTE:
See Sheet 76 of 92 for additional notes.

MODEL: $MODELNAMES
FILE NAME: c:\pwworkdir\benesch projects\projects\ms65238\D264C24-1010210_0211-sht-sabut3.dgn
2/11/2025 9:36:23 AM

benesch
Alfred Benesch & Company
35 W Wacker Drive, Suite 3300
Chicago, Illinois 60601
312-565-0450 Job No. 10800

USER NAME =	DESIGNED - WKK	REVISED -	
	CHECKED - MFH	REVISED -	
PLOT SCALE =	DRAWN - KMS	REVISED -	
PLOT DATE =	CHECKED - MFH	REVISED -	

STATE OF ILLINOIS
DEPARTMENT OF TRANSPORTATION

SOUTH ABUTMENT PLAN AND ELEVATION (STAGE 3)
STRUCTURE NO. 101-0210 & 101-0211

SHEET 75 OF 92 SHEETS

F.A.I. RTE.	SECTION	COUNTY	TOTAL SHEETS	SHEET NO.
39	(201-3)R & (4-1, 5)R	WINNEBAGO	1685	678
		CONTRACT NO. 64C24		
		ILLINOIS	FED. AID PROJECT	

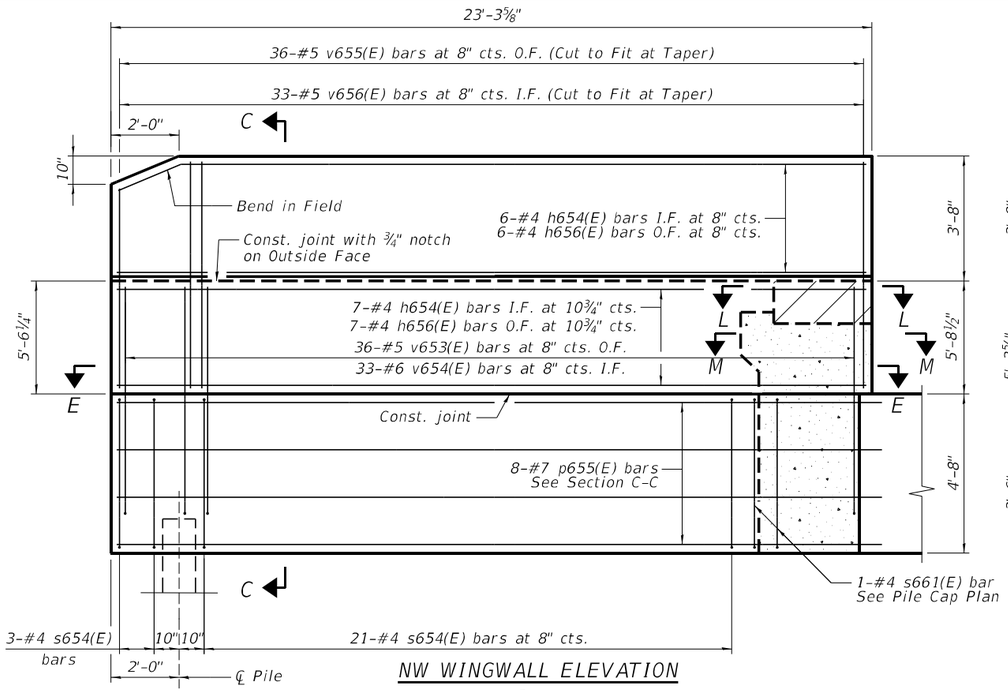

NW WINGWALL ELEVATION

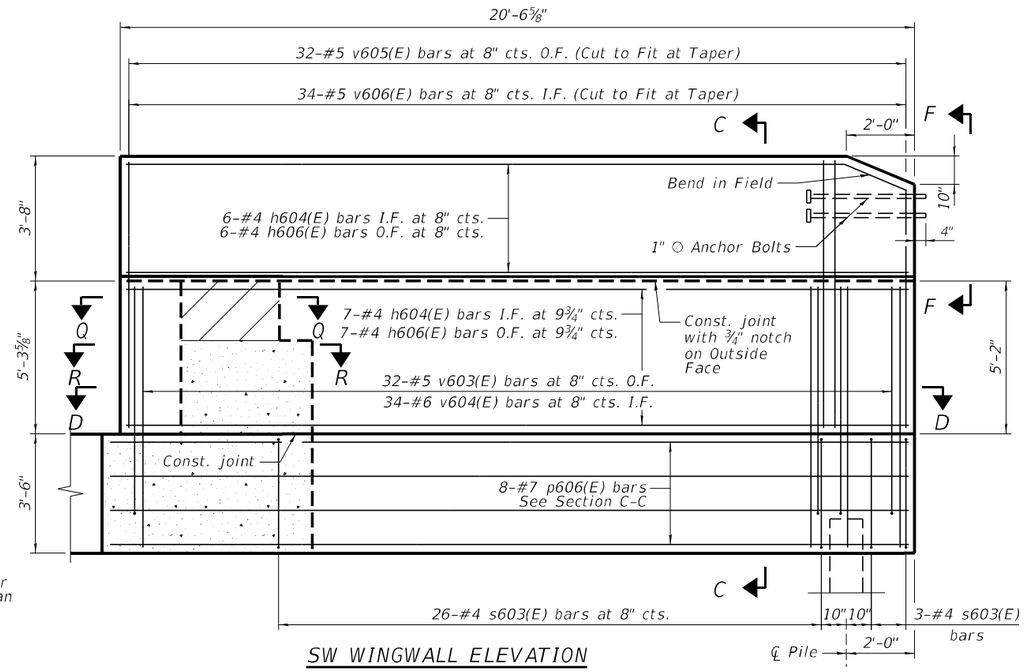

SW WINGWALL ELEVATION

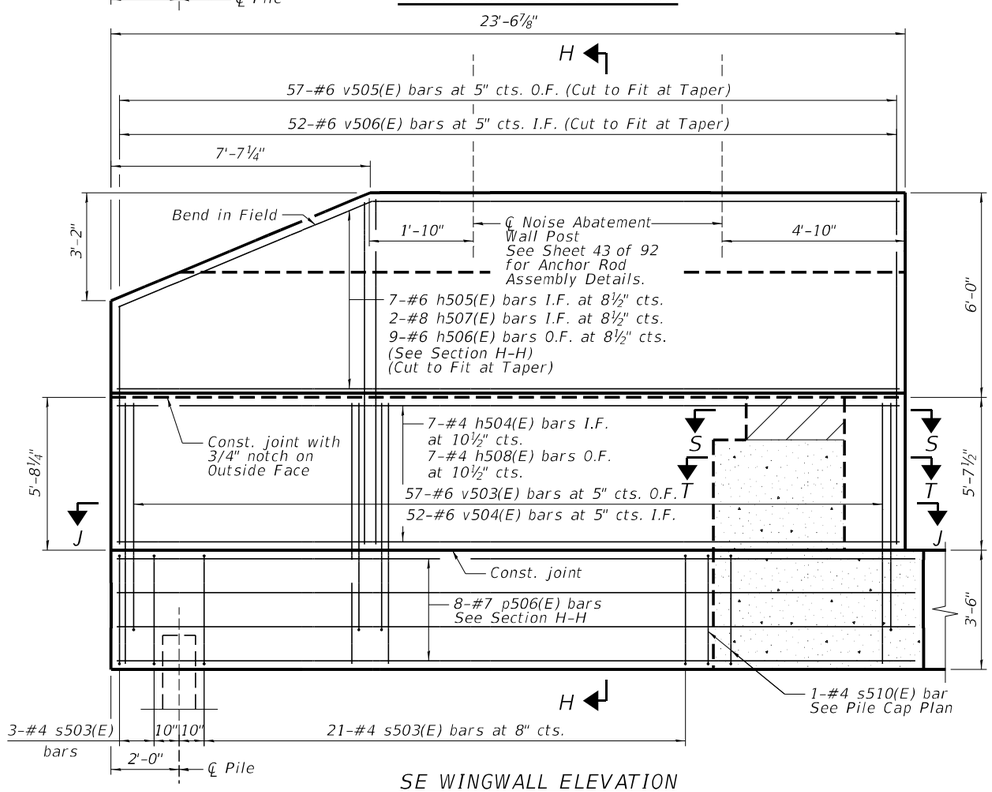

SE WINGWALL ELEVATION

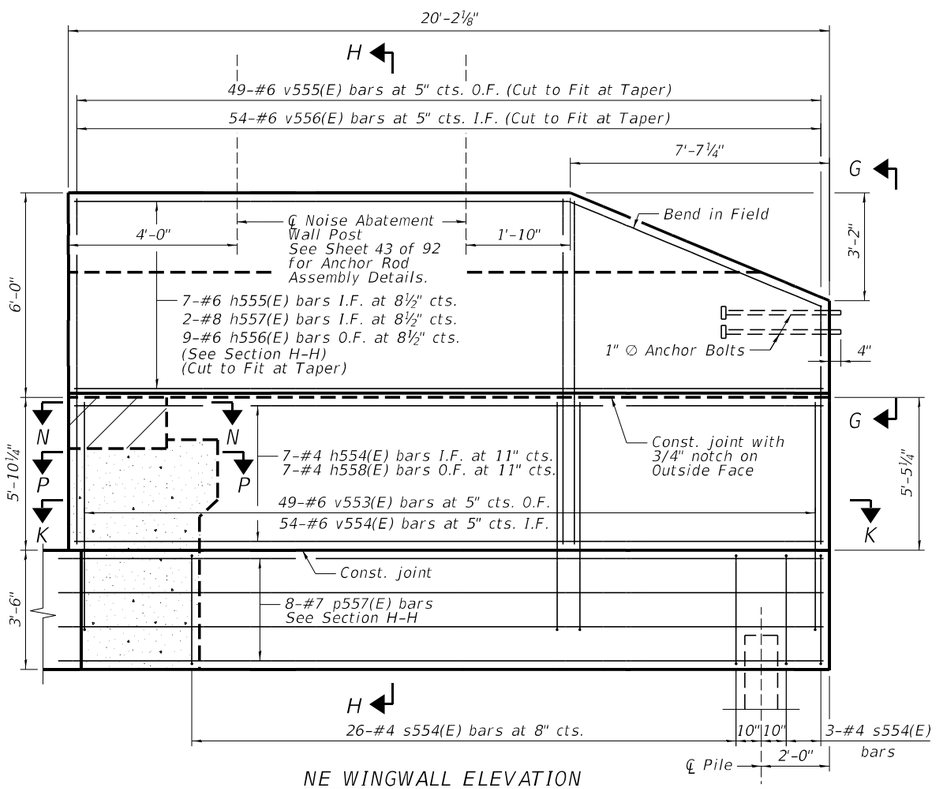

NE WINGWALL ELEVATION

NOTES:

1. Hatched area to be poured after superstructure false work has been removed and after approach slab side formwork has been removed.
2. Quantity of concrete in wingwall parapet and hatched area included with Concrete Superstructure on sheet 52 of 92 .
3. Space reinforcement in cap to miss anchor bolts.
4. Pour steps monolithically with cap.
5. For details of piles, see sheet 86 of 92.
6. The top of backwall and approach slab seat shall have a constant slope determined from the control points shown.
7. Concrete sealer shall be applied to the bearing seats and front faces of the hatched block, backwall, and abutment cap.
8. See Sheet 77 of 92 for all sections and views indicated on this sheet and anchor bolt details.

benesch
Alfred Benesch & Company
35 W Wacker Drive, Suite 3300
Chicago, Illinois 60601
312-969-0450 Job No. 10800

USER NAME =	DESIGNED - WKK	REVISED -	
	CHECKED - MFH	REVISED -	
PLOT SCALE =	DRAWN - KMS	REVISED -	
PLOT DATE =	CHECKED - MFH	REVISED -	

STATE OF ILLINOIS
DEPARTMENT OF TRANSPORTATION

ABUTMENT DETAILS (1 OF 5)
STRUCTURE NO. 101-0210 & 101-0211

SHEET 76 OF 92 SHEETS

F.A.I. RTE.	SECTION	COUNTY	TOTAL SHEETS	SHEET NO.
39	(201-3)R & (4-1, 5)R	WINNEBAGO	1685	679
		CONTRACT NO. 64C24		
		ILLINOIS	FED. AID PROJECT	

MODEL: SMODELNAMES
FILE NAME: c:\pwworkdir\benesch projects\projects\dms65238\D264C24-1010210_0211-sht-abutdtls1.dgn
2/11/2025 9:36:26 AM

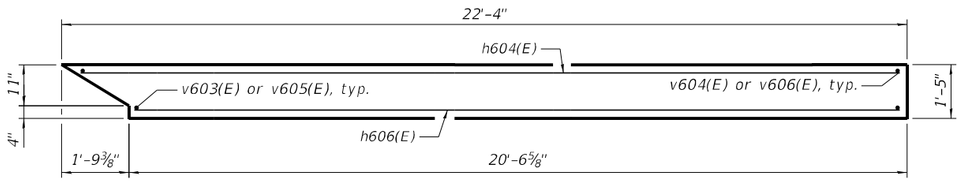

SECTION D-D

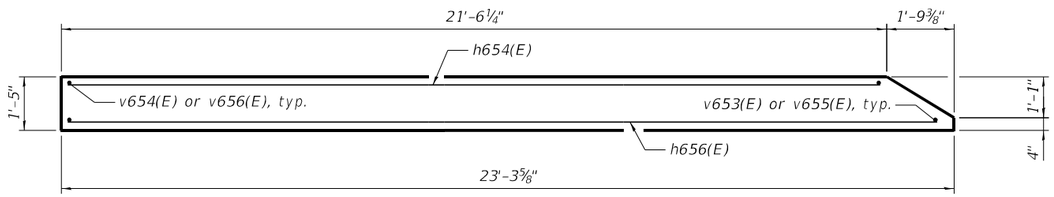

SECTION E-E

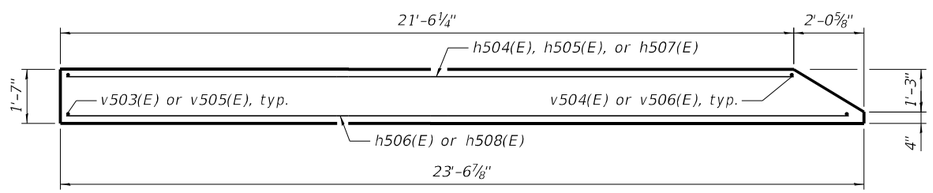

SECTION J-J

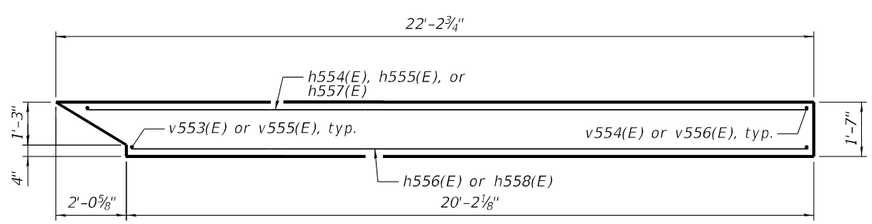

SECTION K-K

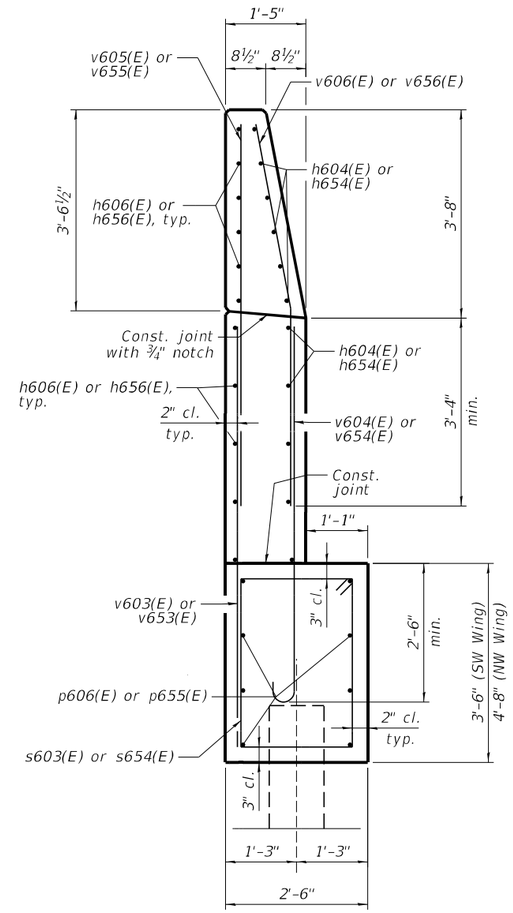

SECTION C-C

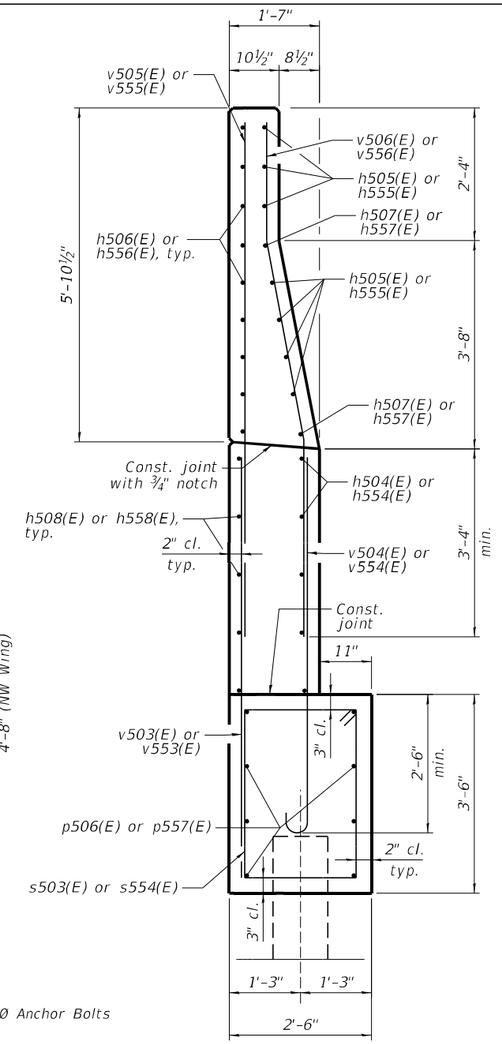

SECTION H-H

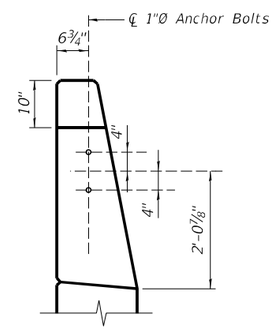

VIEW F-F

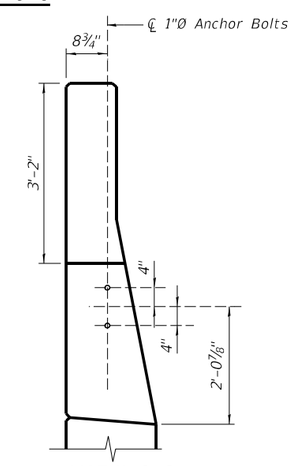

VIEW G-G

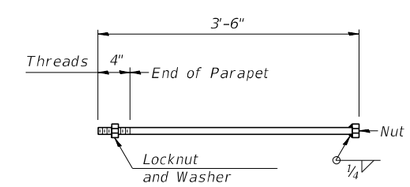

1" Ø ANCHOR BOLT

Anchor bolt assemblies shall be according to Article 1006.09 of the Standard Specifications. Cost included with Concrete Superstructure.

MODEL: sMODELNAMES
FILE NAME: c:\pwworkdir\benesch projects\projects\dms65238\D264C24-1010210_0211-sht-abutdtls2.dgn

benesch
Alfred Benesch & Company
35 W Wacker Drive, Suite 3300
Chicago, Illinois 60601
312-565-0450 Job No. 10800

USER NAME =	DESIGNED - WKK	REVISED -	
	CHECKED - MFH	REVISED -	
PLOT SCALE =	DRAWN - KMS	REVISED -	
PLOT DATE =	CHECKED - MFH	REVISED -	

STATE OF ILLINOIS
DEPARTMENT OF TRANSPORTATION

ABUTMENT DETAILS (2 OF 5)
STRUCTURE NO. 101-0210 & 101-0211

SHEET 77 OF 92 SHEETS

F.A.I. RTE.	SECTION	COUNTY	TOTAL SHEETS	SHEET NO.
39	(201-3)R & (4-1, 5)R	WINNEBAGO	1685	680
		CONTRACT NO. 64C24		
		ILLINOIS	FED. AID PROJECT	

2/11/2025 9:36:29 AM

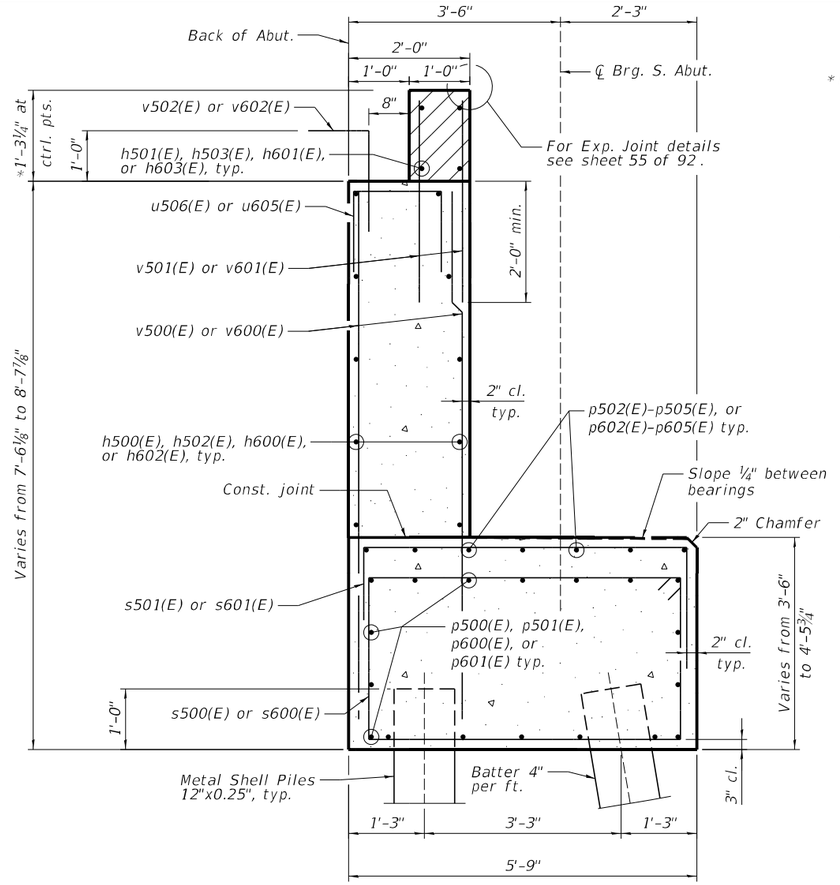

SECTION A-A
(At Rt. ℄'s)

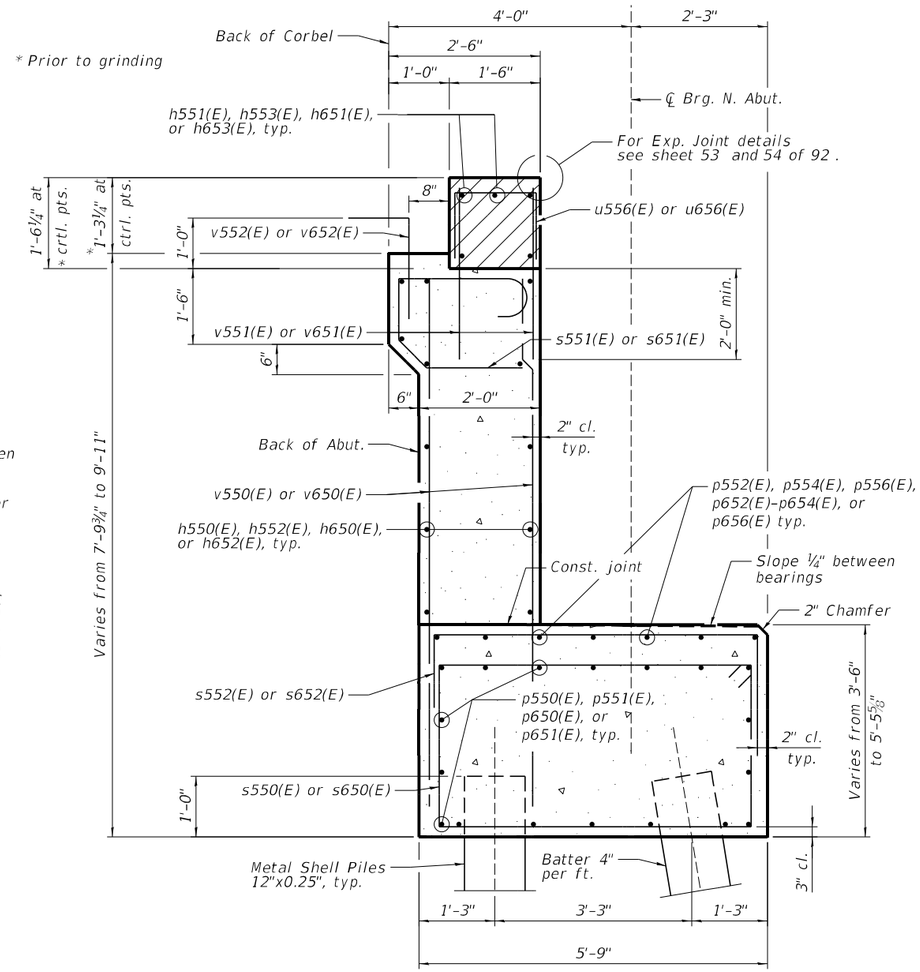

SECTION B-B
(At Rt. ℄'s)

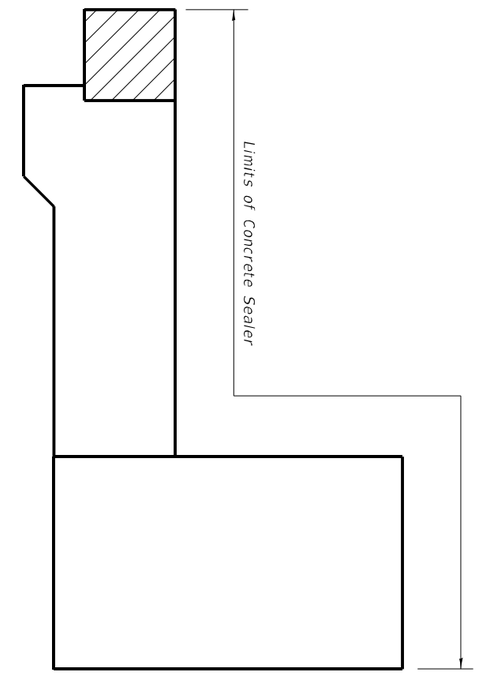

LIMITS OF CONCRETE SEALER
(North Abutment Shown, South Abutment Similar)

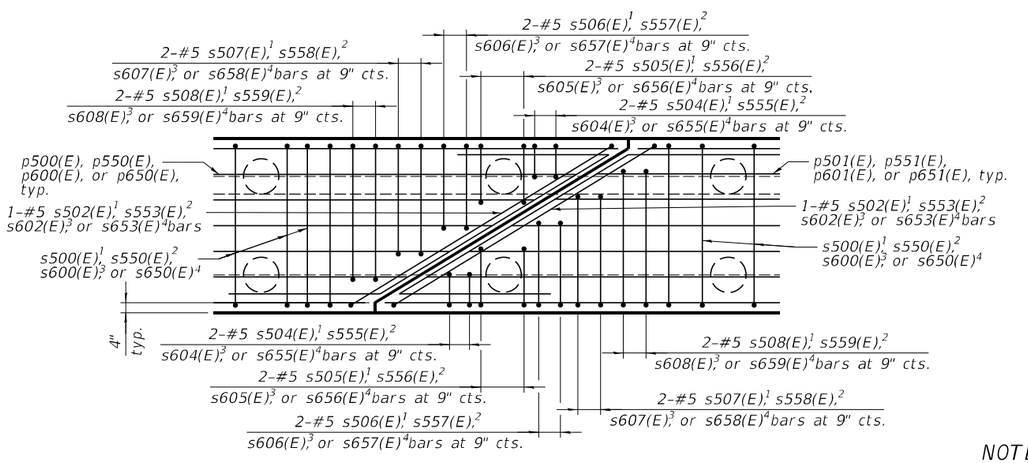

DETAIL G

LEGEND:
1 - S. Abut. NB bars
2 - N. Abut. NB bars
3 - S. Abut SB bars
4 - N. Abut SB bars

NOTE:
s(E) bars may be adjusted to fit with metal shell piles.

PILE DATA - N. ABUT - SOUTHBOUND
Type: Metal Shell Piles 12"x0.25" w/ Pile Shoes
Nominal Required Bearing: 353 kips
Factored Resistance Available: 194 kips
Est. Length: 29 feet
No. Production Piles: 38
No. Test Piles: 1

PILE DATA - N. ABUT - NORTHBOUND
Type: Metal Shell Piles 12"x0.25" w/ Pile Shoes
Nominal Required Bearing: 353 kips
Factored Resistance Available: 194 kips
Est. Length: 27 feet
No. Production Piles: 40
No. Test Piles: 1

PILE DATA - S. ABUT - SOUTHBOUND
Type: Metal Shell Piles 12"x0.25" w/ Pile Shoes
Nominal Required Bearing: 328 kips
Factored Resistance Available: 180 kips
Est. Length: 36 feet
No. Production Piles: 40
No. Test Piles: 1

PILE DATA - S. ABUT - NORTHBOUND
Type: Metal Shell Piles 12"x0.25" w/ Pile Shoes
Nominal Required Bearing: 328 kips
Factored Resistance Available: 180 kips
Est. Length: 36 feet
No. Production Piles: 38
No. Test Piles: 1

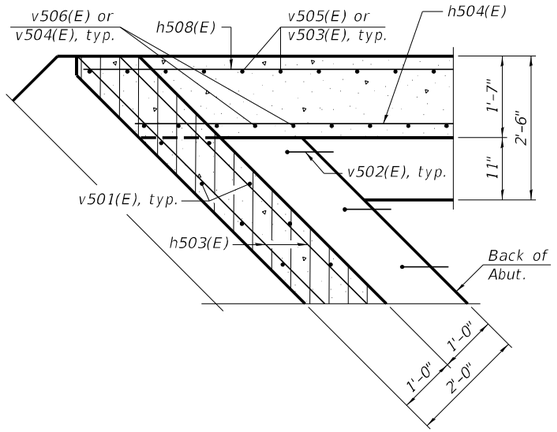

SECTION S-S

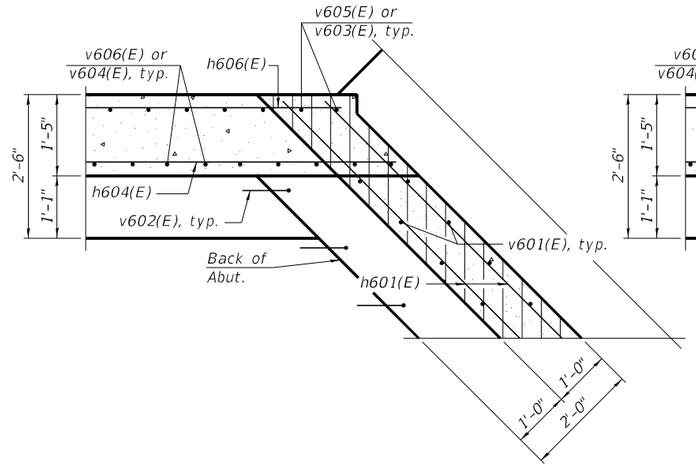

SECTION Q-Q

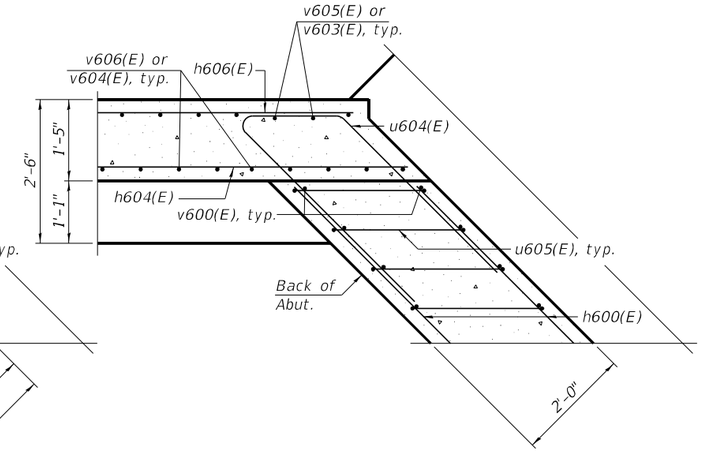

SECTION R-R

(v601(E) bars are not shown for clarity)

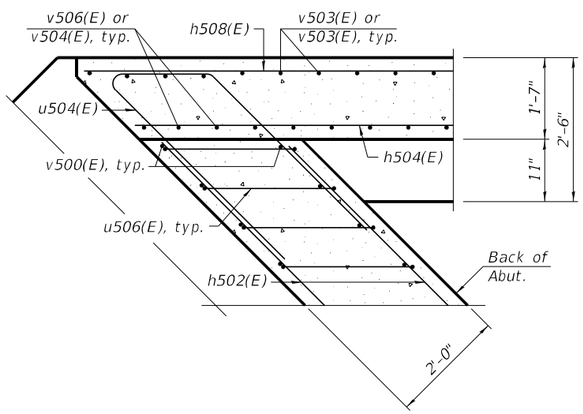

SECTION T-T

(v501(E) bars are not shown for clarity)

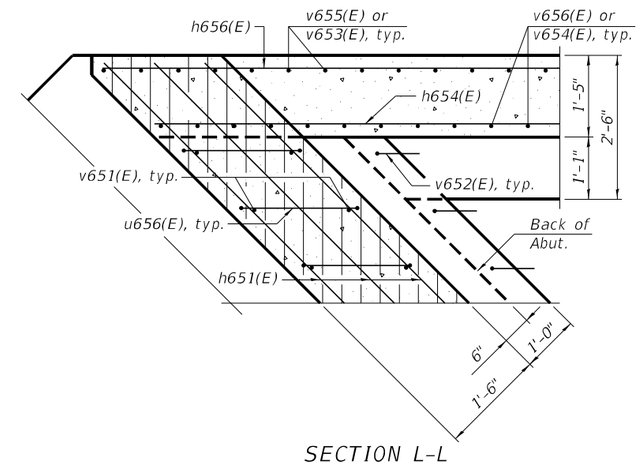

SECTION L-L

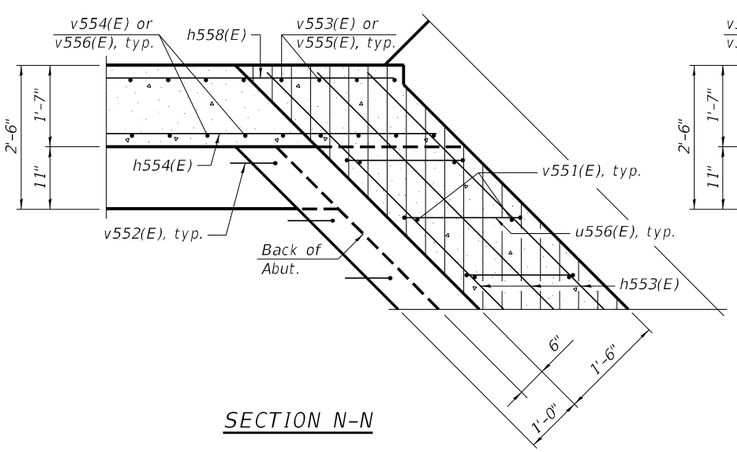

SECTION N-N

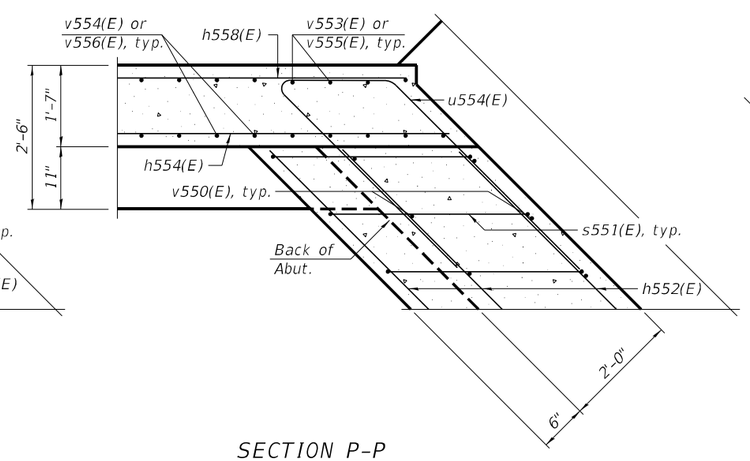

SECTION P-P

(v551(E) bars are not shown for clarity)

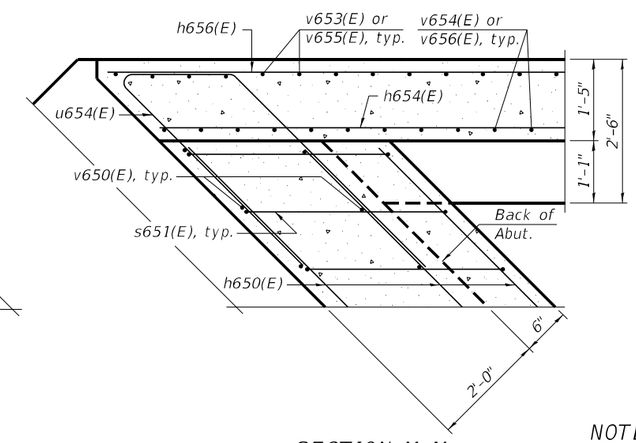

SECTION M-M

(v651(E) bars are not shown for clarity)

NOTE:
See Sheet 76 of 92 for locations of sections.

benesch
Alfred Benesch & Company
35 W Wacker Drive, Suite 3300
Chicago, Illinois 60601
312-565-0450 Job No. 10800

USER NAME =	DESIGNED - WKK	REVISED -	
	CHECKED - MFH	REVISED -	
PLOT SCALE =	DRAWN - KMS	REVISED -	
PLOT DATE =	CHECKED - MFH	REVISED -	

STATE OF ILLINOIS
DEPARTMENT OF TRANSPORTATION

ABUTMENT DETAILS (4 OF 5)
STRUCTURE NO. 101-0210 & 101-0211

SHEET 79 OF 92 SHEETS

F.A.I. RTE.	SECTION	COUNTY	TOTAL SHEETS	SHEET NO.
39	(201-3)R & (4-1, 5)R	WINNEBAGO	1685	682
		CONTRACT NO. 64C24		
		ILLINOIS	FED. AID PROJECT	

MODEL: $MODELNAME$
FILE NAME: c:\pwworkdir\benesch projects\projects\dms65238\D264C24-1010210_0211-sht-abutdtls4.dgn

2/11/2025 9:36:35 AM

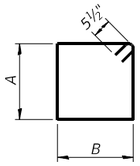

BARS s500(E), s502(E)-s508(E), s550(E), s553(E)-s559(E), s600(E), s602(E)-s608(E), s650(E) & s653-s659(E)

Bar	A	B
s500(E)	3'-1"	5'-5"
s502(E)	3'-1"	10'-5"
s503(E)	3'-1"	2'-2"
s504(E)	3'-1"	11"
s505(E)	3'-1"	1'-9"
s506(E)	3'-1"	2'-8"
s507(E)	3'-1"	3'-6"
s508(E)	3'-1"	4'-5"
s550(E)	3'-1"	5'-5"
s553(E)	3'-1"	10'-5"
s554(E)	3'-1"	2'-2"
s555(E)	3'-1"	11"
s556(E)	3'-1"	1'-9"
s557(E)	3'-1"	2'-8"
s558(E)	3'-1"	3'-6"
s559(E)	3'-1"	4'-5"
s600(E)	3'-1"	5'-5"
s602(E)	3'-1"	10'-5"
s603(E)	3'-1"	2'-2"
s604(E)	3'-1"	11"
s605(E)	3'-1"	1'-9"
s606(E)	3'-1"	2'-8"
s607(E)	3'-1"	3'-6"
s608(E)	3'-1"	4'-5"
s650(E)	3'-1"	5'-5"
s653(E)	3'-1"	10'-5"
s654(E)	4'-3"	2'-2"
s655(E)	3'-1"	11"
s656(E)	3'-1"	1'-9"
s657(E)	3'-1"	2'-8"
s658(E)	3'-1"	3'-6"
s659(E)	3'-1"	4'-5"

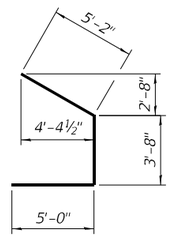

BAR u503(E) & u650(E)

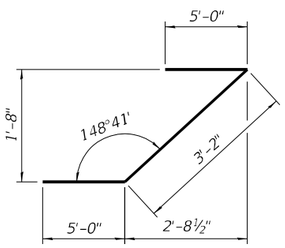

BAR u504(E), u554(E), u604(E), & u654(E)

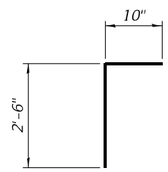

BARS v502(E), v552(E), v602(E), & v652(E)

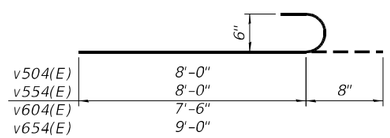

BARS v504(E), v554(E), v604(E), and v654(E)

S. ABUTMENT BILL OF MATERIAL SB (SN 101-0210)

Bar	No.	Size	Length	Shape
h600(E)	40	#4	26'-9"	
h601(E)	16	#5	27'-3"	
h602(E)	20	#4	24'-6"	
h603(E)	8	#5	25'-0"	
h604(E)	13	#4	22'-0"	
h606(E)	13	#4	20'-2"	
p600(E)	72	#7	29'-6"	
p601(E)	36	#7	25'-9"	
p602(E)	7	#5	32'-10"	
p603(E)	14	#5	23'-6"	
p604(E)	7	#5	15'-0"	
p605(E)	7	#5	37'-8"	
p606(E)	8	#7	22'-0"	
s600(E)	162	#5	17'-11"	
s601(E)	104	#5	11'-5"	
s602(E)	2	#5	27'-11'	
s603(E)	29	#4	11'-5"	
s604(E)	4	#5	8'-11"	
s605(E)	4	#5	10'-7"	
s606(E)	4	#5	12'-5"	
s607(E)	4	#5	14'-1"	
s608(E)	4	#5	15'-11"	
s609(E)	10	#5	9'-11"	
u600(E)	4	#6	15'-3"	
u603(E)	5	#6	17'-4"	
u604(E)	10	#4	13'-2"	
u605(E)	142	#5	7'-2"	
v600(E)	284	#5	7'-2"	
v601(E)	284	#5	3'-1"	
v602(E)	142	#5	3'-4"	
v603(E)	32	#5	8'-3"	
v604(E)	34	#6	8'-2"	
v605(E)	32	#5	7'-0"	
v606(E)	34	#5	7'-1"	
Structure Excavation			Cu. Yd.	446
Concrete Structures			Cu. Yd.	178.8
Reinforcement Bars, Epoxy Coated			Pound	20,620
Furnishing Metal Shell Piles 12"x0.25"			Foot	1,440
Driving Piles			Foot	1,440
Test Pile Metal Shells			Each	1
Pile Shoes			Each	41
Concrete Sealer			Sq. Ft.	1,711

For details of Bar Splicers, see sheet 88 of 92.

For details of piles, see sheet 86 of 92.

S. ABUTMENT BILL OF MATERIAL NB (SN 101-0211)

Bar	No.	Size	Length	Shape
h500(E)	30	#4	26'-0"	
h501(E)	12	#5	26'-6"	
h502(E)	30	#4	26'-0"	
h503(E)	12	#5	26'-6"	
h504(E)	7	#4	21'-2"	
h505(E)	7	#6	21'-2"	
h506(E)	9	#6	23'-2"	
h507(E)	2	#8	21'-2"	
h508(E)	7	#4	23'-2"	
p500(E)	54	#7	29'-3"	
p501(E)	54	#7	27'-3"	
p502(E)	14	#5	32'-10"	
p503(E)	7	#5	17'-6"	
p504(E)	7	#5	32'-9"	
p505(E)	7	#5	34'-0"	
p506(E)	8	#7	22'-9"	
s500(E)	153	#5	17'-11"	
s501(E)	128	#5	9'-5"	
s502(E)	2	#5	27'-11"	
s503(E)	24	#4	11'-5"	
s504(E)	4	#5	8'-11"	
s505(E)	4	#5	10'-7"	
s506(E)	4	#5	12'-5"	
s507(E)	4	#5	14'-1"	
s508(E)	4	#5	15'-11"	
s509(E)	10	#5	9'-11"	
s510(E)	2	#4	6'-9"	
u500(E)	5	#6	16'-9"	
u503(E)	4	#6	13'-10"	
u504(E)	10	#4	13'-2"	
u506(E)	142	#5	7'-2"	
v500(E)	284	#5	7'-2"	
v501(E)	284	#5	3'-1"	
v502(E)	142	#5	3'-4"	
v503(E)	57	#6	8'-8"	
v504(E)	52	#6	8'-8"	
v505(E)	57	#6	9'-4"	
v506(E)	52	#6	9'-5"	
Structure Excavation			Cu. Yd.	406
Concrete Structures			Cu. Yd.	186.4
Reinforcement Bars, Epoxy Coated			Pound	22,840
Furnishing Metal Shell Piles 12"x0.25"			Foot	1,368
Driving Piles			Foot	1,368
Test Pile Metal Shells			Each	1
Pile Shoes			Each	39
Concrete Sealer			Sq. Ft.	1,734

N. ABUTMENT BILL OF MATERIAL SB (SN 101-0210)

Bar	No.	Size	Length	Shape
h650(E)	48	#4	26'-6"	
h651(E)	20	#5	27'-0"	
h652(E)	24	#4	24'-6"	
h653(E)	10	#5	24'-10"	
h654(E)	13	#4	21'-5"	
h656(E)	13	#4	23'-2"	
p650(E)	54	#7	35'-9"	
p651(E)	36	#7	28'-4"	
p652(E)	7	#5	20'-2"	
p653(E)	7	#5	36'-1"	
p654(E)	14	#5	23'-6"	
p655(E)	8	#7	23'-6"	
p656(E)	7	#5	27'-5"	
s650(E)	154	#5	17'-11"	
s651(E)	142	#5	5'-10"	
s652(E)	105	#5	11'-5"	
s653(E)	2	#5	27'-11"	
s654(E)	24	#4	13'-9"	
s655(E)	4	#5	8'-11"	
s656(E)	4	#5	10'-7"	
s657(E)	4	#5	12'-5"	
s658(E)	4	#5	14'-1"	
s659(E)	4	#5	15'-11"	
s660(E)	10	#5	9'-11"	
s661(E)	2	#4	6'-9"	
u650(E)	5	#6	13'-10"	
u653(E)	4	#6	16'-9"	
u654(E)	10	#4	13'-2"	
u656(E)	142	#5	4'-7"	
v650(E)	284	#5	7'-6"	
v651(E)	284	#5	3'-4"	
v652(E)	142	#5	3'-4"	
v653(E)	36	#5	9'-1"	
v654(E)	33	#6	9'-8"	
v655(E)	36	#5	7'-0"	
v656(E)	33	#5	7'-1"	
Structure Excavation			Cu. Yd.	453
Concrete Structures			Cu. Yd.	199.1
Reinforcement Bars, Epoxy Coated			Pound	21,470
Furnishing Metal Shell Piles 12"x0.25"			Foot	1,102
Driving Piles			Foot	1,102
Test Pile Metal Shells			Each	1
Pile Shoes			Each	39
Concrete Sealer			Sq. Ft.	1,782

Bars indicated thus 6x2 #5 etc. indicates 6 lines of bars with 2 lengths per line.

N. ABUTMENT BILL OF MATERIAL NB (SN 101-0211)

Bar	No.	Size	Length	Shape
h550(E)	36	#4	25'-11"	
h551(E)	15	#5	26'-4"	
h552(E)	36	#4	25'-10"	
h553(E)	15	#5	26'-3"	
h554(E)	7	#4	21'-10"	
h555(E)	7	#6	21'-10"	
h556(E)	9	#6	19'-10"	
h557(E)	2	#8	21'-10"	
h558(E)	7	#4	19'-10"	
p550(E)	54	#7	27'-6"	
p551(E)	54	#7	29'-3"	
p552(E)	14	#5	18'-2"	
p554(E)	7	#5	30'-2"	
p556(E)	42	#5	26'-6"	
p557(E)	8	#7	22'-0"	
s550(E)	162	#5	17'-11"	
s551(E)	142	#5	5'-10"	
s552(E)	117	#5	9'-5"	
s553(E)	2	#5	27'-11"	
s554(E)	29	#4	11'-5'	
s555(E)	4	#5	8'-11"	
s556(E)	4	#5	10'-7"	
s557(E)	4	#5	12'-5"	
s558(E)	4	#5	14'-1"	
s559(E)	4	#5	15'-11"	
s560(E)	10	#5	9'-11"	
u550(E)	5	#6	17'-4"	
u553(E)	4	#6	15'-3"	
u554(E)	10	#4	13'-2"	
u556(E)	142	#5	4'-7"	
v550(E)	284	#5	7'-6"	
v551(E)	284	#5	3'-4"	
v552(E)	142	#5	3'-4"	
v553(E)	49	#6	8'-6"	
v554(E)	54	#6	8'-8"	
v555(E)	49	#6	9'-4"	
v556(E)	54	#6	9'-5"	
Structure Excavation			Cu. Yd.	531
Concrete Structures			Cu. Yd.	213.3
Reinforcement Bars, Epoxy Coated			Pound	24,300
Furnishing Metal Shell Piles 12"x0.25"			Foot	1,080
Driving Piles			Foot	1,080
Test Pile Metal Shells			Each	1
Pile Shoes			Each	41
Concrete Sealer			Sq. Ft.	1,858

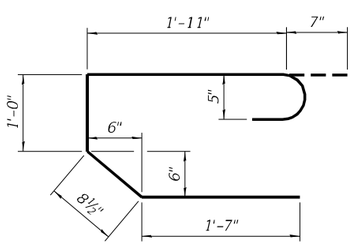

BARS s551(E) & s651(E)

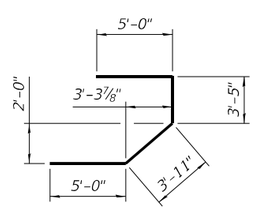

BARS u550(E) & u603(E)

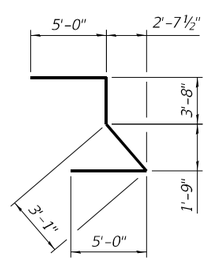

BARS u500(E) & u653(E)

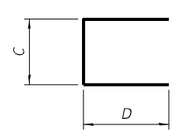

BARS s501(E), s509(E), s510(E), s552(E), s560(E), s601(E), s609(E), s652(E), s660(E), s661(E), u506(E), u553(E), u556(E), u600(E), u605(E), & u656(E)

Bar	C	D
s501(E)	5'-5"	2'-0"
s509(E)	3'-1"	3'-5"
s510(E)	3'-1"	1'-10"
s552(E)	5'-5"	2'-0"
s560(E)	3'-1"	3'-5"
s601(E)	5'-5"	3'-0"
s609(E)	3'-1"	3'-5"
s652(E)	5'-5"	3'-0"
s660(E)	3'-1"	3'-5"
s661(E)	3'-1"	1'-10"
u506(E)	3'-2"	2'-0"

Bar	C	D
u553(E)	5'-3"	5'-0"
u556(E)	2'-3"	1'-2"
u600(E)	5'-3"	5'-0"
u605(E)	3'-2"	2'-0"
u656(E)	2'-3"	1'-2"

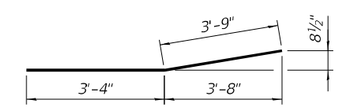

BAR v606(E) & v656(E)

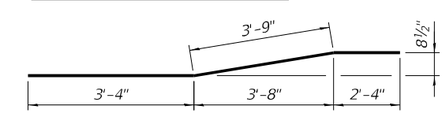

BAR v506(E) & v556(E)

MODEL: sMODELNAMES
FILE NAME: c:\pwworkdir\benesch projects\projects\dms65238\D264C24-1010210_0211-sht-abutdtls5.dgn

benesch
Alfred Benesch & Company
35 W Wacker Drive, Suite 3300
Chicago, Illinois 60601
312-565-0450 Job No. 10800

USER NAME =	DESIGNED - WKK	REVISED -	
	CHECKED - MFH	REVISED -	
PLOT SCALE =	DRAWN - KMS	REVISED -	
PLOT DATE =	CHECKED - MFH	REVISED -	

STATE OF ILLINOIS
DEPARTMENT OF TRANSPORTATION

ABUTMENT DETAILS (5 OF 5)
STRUCTURE NO. 101-0210 & 101-0211

SHEET 80 OF 92 SHEETS

F.A.I. RTE.	SECTION	COUNTY	TOTAL SHEETS	SHEET NO.
39	(201-3)R & (4-1, 5)R	WINNEBAGO	1685	683

CONTRACT NO. 64C24

ILLINOIS FED. AID PROJECT

2/11/2025 9:36:38 AM

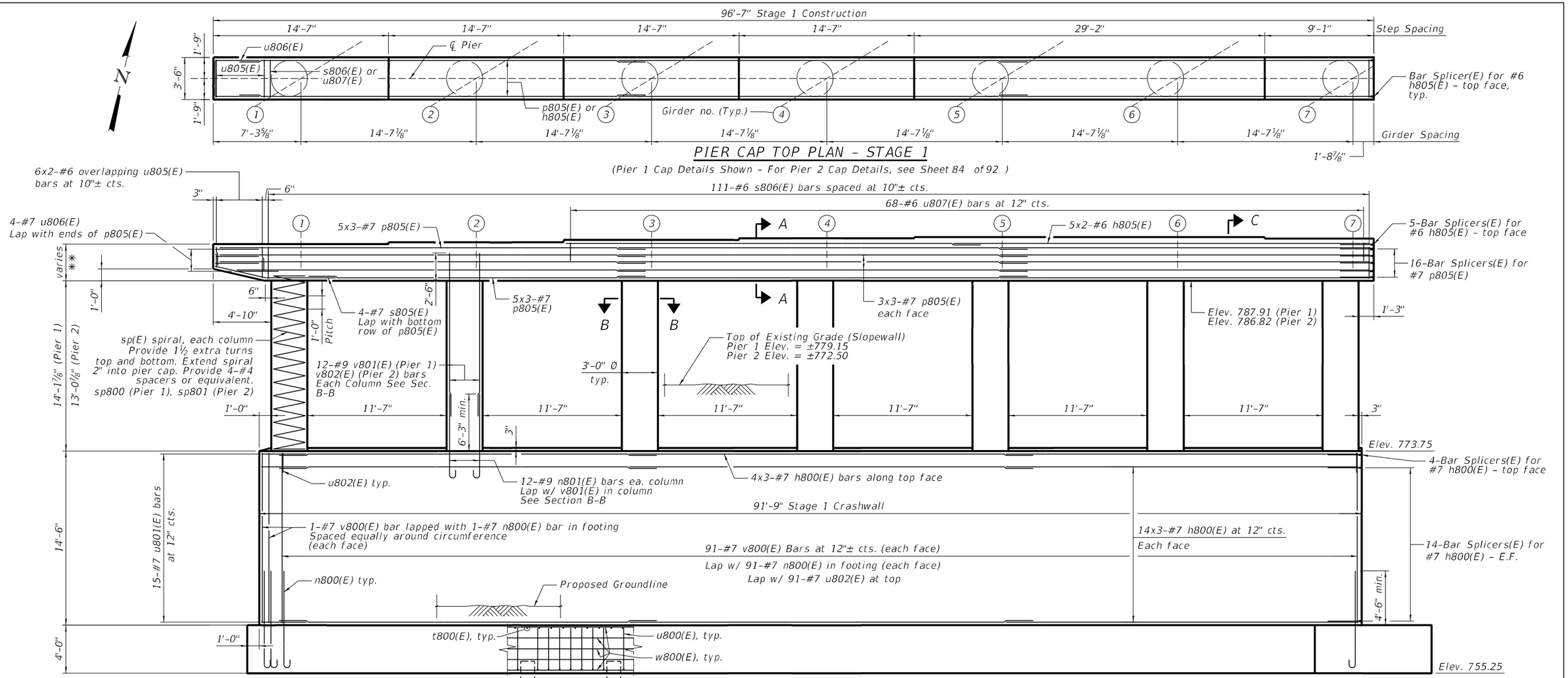

NOTES:

1. For Pier notes and seat elevations see sheet 84 of 92 .
2. For Sections A-A, B-B, and C-C, see sheet 85 of 92 .

benesch
Alfred Benesch & Company
35 W Wacker Drive, Suite 3300
Chicago, Illinois 60601
312-565-0450 Job No. 10600

USER NAME =	DESIGNED - AAB	REVISED -	
	CHECKED - JHG	REVISED -	
PLOT SCALE =	DRAWN - KMS	REVISED -	
PLOT DATE =	CHECKED - JHG	REVISED -	

STATE OF ILLINOIS
DEPARTMENT OF TRANSPORTATION

PIER PLAN AND ELEVATION (STAGE 1)
STRUCTURE NO. 101-0210 & 101-0211

SHEET 81 OF 92 SHEETS

F.A.I. RTE.	SECTION	COUNTY	TOTAL SHEETS	SHEET NO.
39	(201-3)R & (4-1, 5)R	WINNEBAGO	1685	684
		CONTRACT NO. 64C24		
		ILLINOIS	FED. AID PROJECT	

MODEL: SMODELNAMES
FILE NAME: c:\pwworkl\benesch projects\projects\dms65238\D264C24-1010210_0211-sht-pierdtls1.dgn
2/11/2025 9:36:41 AM

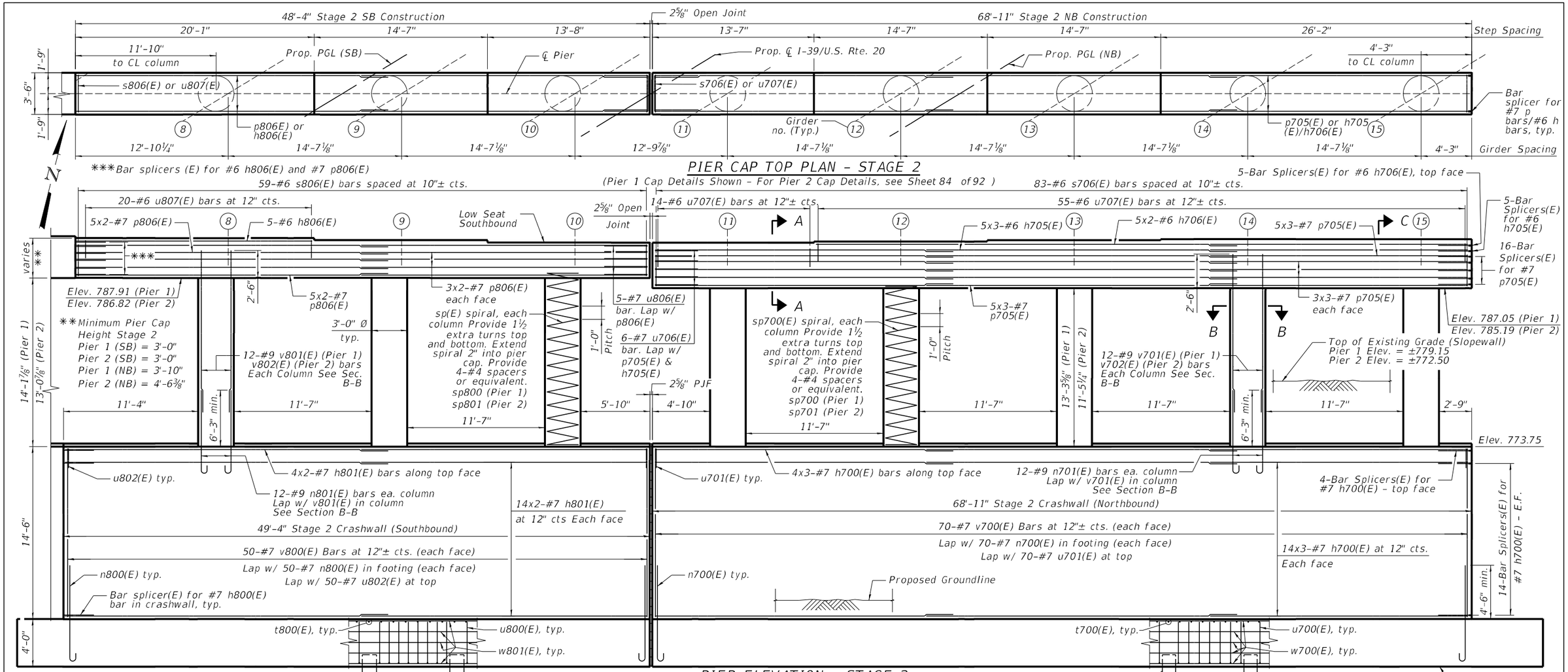

PIER CAP TOP PLAN - STAGE 2

MINIMUM LAP LENGTHS
#6 BAR - 4'-4"
#7 BAR - 5'-0"

PIER ELEVATION - STAGE 2
(Looking North)
(Pier 1 Cap Details Shown - For Pier 2 Cap Details, see Sheet 84 of 92)

FOOTING PLAN - STAGE 2

NOTES:

1. For Pier notes and seat elevations see sheet 84 of 92 .
2. For Sections A-A, B-B, and C-C, see sheet 85 of 92 .

benesch
Alfred Benesch & Company
35 W Wacker Drive, Suite 3300
Chicago, Illinois 60601
312-565-0150 Job No. 10800

USER NAME =	DESIGNED - AAB	REVISED -	
	CHECKED - JHG	REVISED -	
PLOT SCALE =	DRAWN - KMS	REVISED -	
PLOT DATE =	CHECKED - JHG	REVISED -	

STATE OF ILLINOIS
DEPARTMENT OF TRANSPORTATION

PIER PLAN AND ELEVATION (STAGE 2)
STRUCTURE NO. 101-0210 & 101-0211

SHEET 82 OF 92 SHEETS

F.A.I. RTE.	SECTION	COUNTY	TOTAL SHEETS	SHEET NO.
39	(201-3)R & (4-1, 5)R	WINNEBAGO	1685	685
		CONTRACT NO. 64C24		
		ILLINOIS	FED. AID PROJECT	

MODEL: SMODELNAMES
FILE NAME: c:\pwworkdir\benesch projects\projects\dms65238\D264C24-1010210_0211-sht-pierdtls2.dgn
2/11/2025 9:36:45 AM

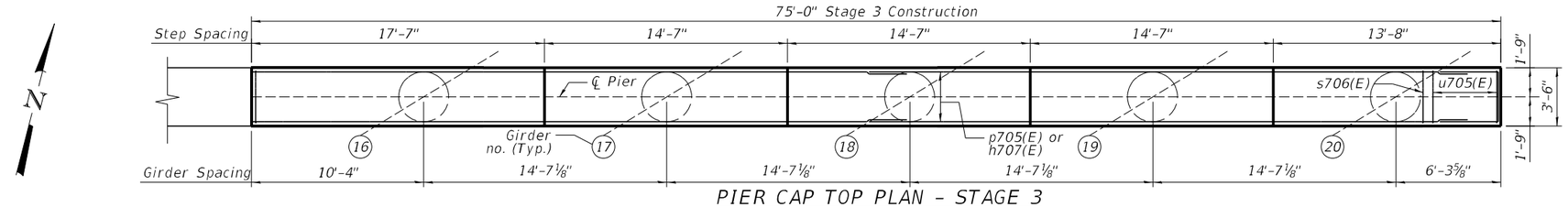

** Minimum Cap Height Stage 3
Pier 1 = 3'-0"
Pier 2 = 3'-0"

PIER CAP TOP PLAN - STAGE 3

(Pier 1 Cap Details Shown - For Pier 2 Cap Details, see Sheet 84 of 92)

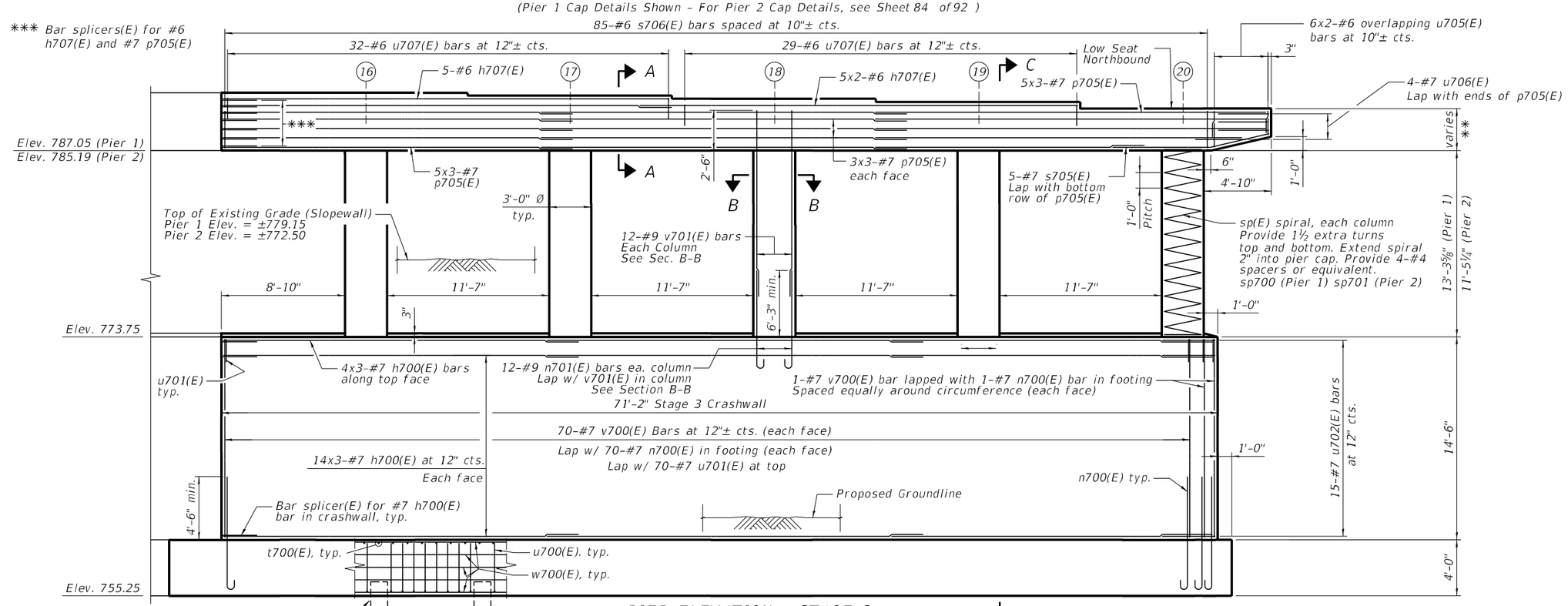

PIER ELEVATION - STAGE 3

(Looking North)
(Pier 1 Cap Details Shown - For Pier 2 Cap Details, see Sheet 84 of 92)

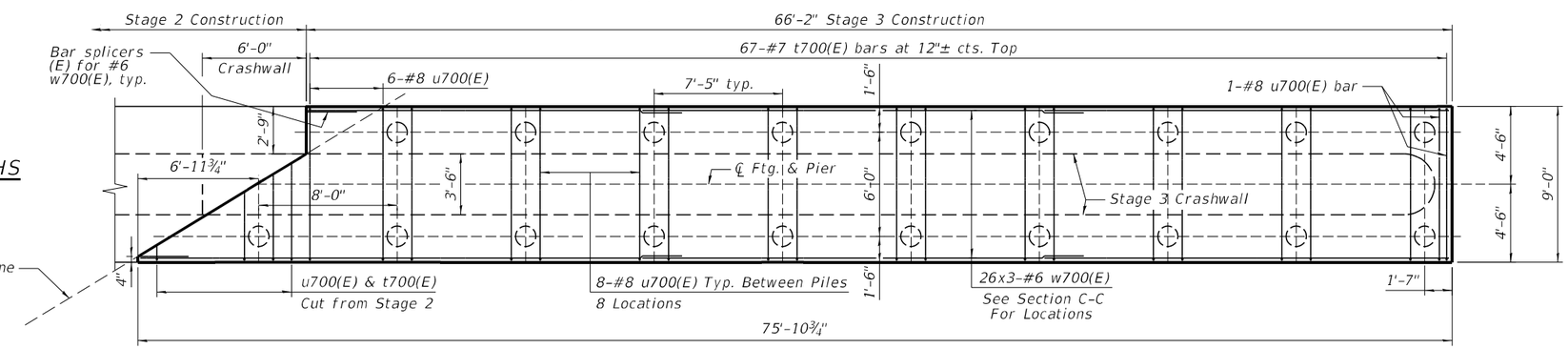

MINIMUM LAP LENGTHS

#6 BAR - 4'-4"
#7 BAR - 5'-0"

FOOTING PLAN - STAGE 3

NOTES:

1. For Pier notes and seat elevations see sheet 84 of 92 .
2. For Sections A-A, B-B, and C-C, see sheet 85 of 92 .

MODEL: sMODELNAMES
FILE NAME: c:\pwworking\benesch projects\projects\dms65238\D264C24-1010210_0211-sht-pierdtl-3.dgn

benesch
Alfred Benesch & Company
35 W Wacker Drive, Suite 3300
Chicago, Illinois 60601
312-969-0450 Job No. 10800

USER NAME =	DESIGNED - AAB	REVISED -	
	CHECKED - JHG	REVISED -	
PLOT SCALE =	DRAWN - KMS	REVISED -	
PLOT DATE =	CHECKED - JHG	REVISED -	

STATE OF ILLINOIS
DEPARTMENT OF TRANSPORTATION

PIER PLAN AND ELEVATION (STAGE 3)
STRUCTURE NO. 101-0210 & 101-0211

SHEET 83 OF 92 SHEETS

F.A.I. RTE.	SECTION	COUNTY	TOTAL SHEETS	SHEET NO.
39	(201-3)R & (4-1, 5)R	WINNEBAGO	1685	686
		CONTRACT NO. 64C24		
		ILLINOIS	FED. AID PROJECT	

2/11/2025 9:36:48 AM

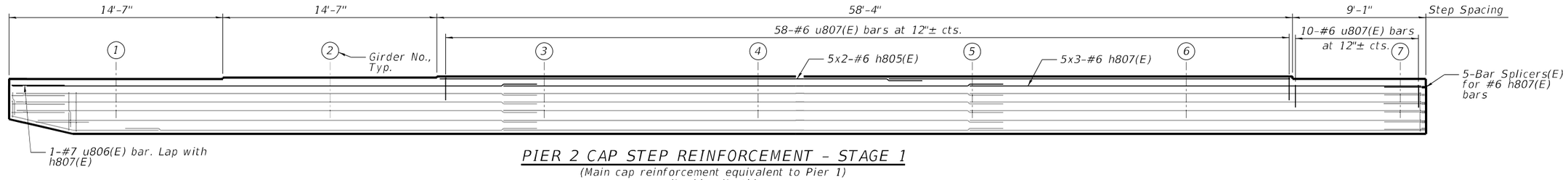

PIER 2 CAP STEP REINFORCEMENT - STAGE 1

(Main cap reinforcement equivalent to Pier 1)
(Looking North)

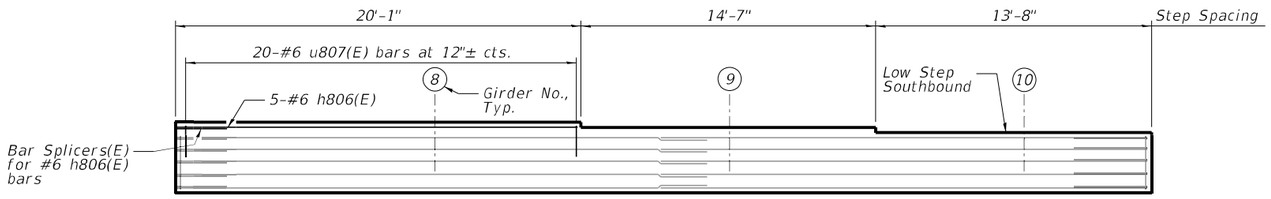

PIER 2 CAP STEP REINFORCEMENT - STAGE 2 (SB)

(Main cap reinforcement equivalent to Pier 1)
(Looking North)

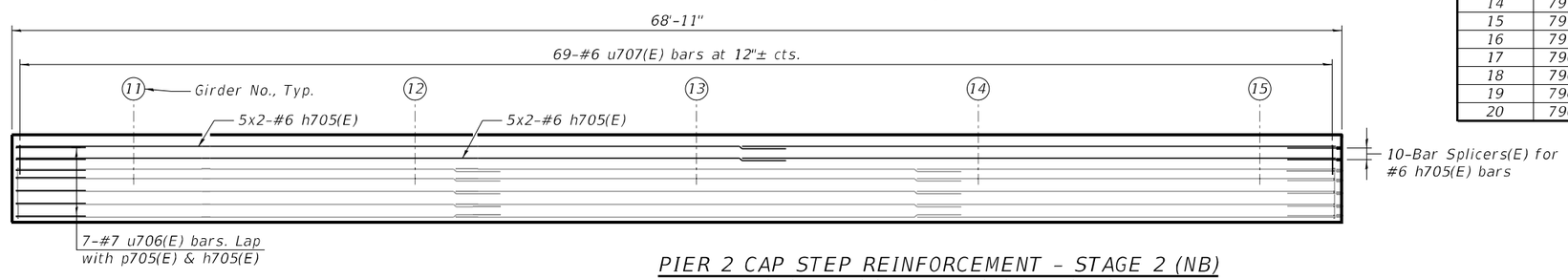

PIER 2 CAP STEP REINFORCEMENT - STAGE 2 (NB)

(Main cap reinforcement equivalent to Pier 1)
(Looking North)

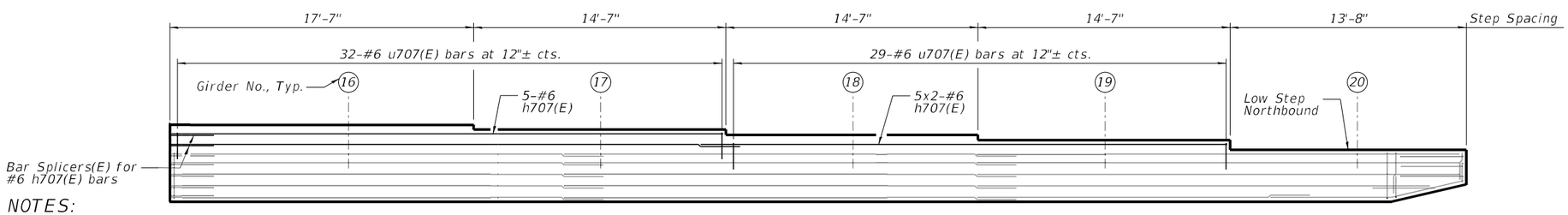

PIER 2 CAP STEP REINFORCEMENT - STAGE 3

(Main cap reinforcement equivalent to Pier 1)
(Looking North)

PIER 1 SEAT ELEVATIONS

Girder	Elev.	Step Height
1	790.96	-
2	791.13	2"
3	791.30	2"
4	791.45	1 3/4"
5	791.56	1 3/8"
6	791.56	-
7	791.43	-1 1/2"
8	791.27	-1 7/8"
9	791.09	-2 1/8"
10	790.91	-2 1/8"
11	790.88	-
12	790.99	1 3/8"
13	791.09	1 1/4"
14	791.18	1 1/8"
15	791.18	-
16	791.18	-
17	790.99	-2 1/4"
18	790.76	-2 3/4"
19	790.52	-2 7/8"
20	790.05	-5 5/8"

PIER 2 SEAT ELEVATIONS

Girder	Elev.	Step Height
1	790.56	-
2	790.65	1 1/8"
3	790.74	1 1/8"
4	790.74	-
5	790.74	-
6	790.74	-
7	790.57	-2"
8	790.33	-2 7/8"
9	790.07	-3 1/8"
10	789.82	-3"
11	789.72	-
12	789.72	-
13	789.72	-
14	789.72	-
15	789.72	-
16	789.63	-1 1/8"
17	789.36	-3 1/4"
18	789.06	-3 5/8"
19	788.75	-3 3/4"
20	788.19	-6 3/4"

PILE DATA - PIER 1 - NORTHBOUND

Type: Metal Shell Piles 14"x0.312" w/ Pile Shoes
Nominal Required Bearing: 513 kips
Factored Resistance Available: 282 kips
Est. Length: 40 feet
No. Production Piles: 38
No. Test Piles: 2 ✳

PILE DATA - PIER 2 - NORTHBOUND

Type: Metal Shell Piles 14"x0.312" w/ Pile Shoes
Nominal Required Bearing: 513 kips
Factored Resistance Available: 282 kips
Est. Length: 40 feet
No. Production Piles: 38
No. Test Piles: 2 ✳

PILE DATA - PIER 1 - SOUTHBOUND

Type: Metal Shell Piles 14"x0.312" w/ Pile Shoes
Nominal Required Bearing: 513 kips
Factored Resistance Available: 282 kips
Est. Length: 14 feet
No. Production Piles: 39
No. Test Piles: 1 ✳

PILE DATA - PIER 2 - SOUTHBOUND

Type: Metal Shell Piles 14"x0.312" w/ Pile Shoes
Nominal Required Bearing: 513 kips
Factored Resistance Available: 282 kips
Est. Length: 14 feet
No. Production Piles: 39
No. Test Piles: 1 ✳

✳ Due to varying soil strata encountered at the site, it is recommended that a test pile be driven at the east end of each stage.

NOTES:

1. Space Reinforcement in cap to miss anchor bolts.
2. Pour steps monolithically with cap.
3. For details of metal shell piles, see sheet 86 of 92 .
4. Hard driving conditions are expected at both SB piers as well as at the east end of the northbound piers. Piles shall be driven to a min. tip elevation of 741.25. If pier piles cannot be driven to the min. tip elevation without pile damage, the Contractor shall drive an adjacent pile next to the damaged one, using measures such as pre-coring and limiting the pile hammer energy. If pre-coring is utilized, the pre-core diameter shall be 18" and the annulus between the pile and the pre-core hole shall be filled with sand after placing the pile in the hole and prior to driving the pile. This work shall be performed at the Contractor's expense and considered in the cost of driving piles.
5. Bars noted thus, 3x2-#5 indicates 3 lines of bars with 2 lengths of bars per line.

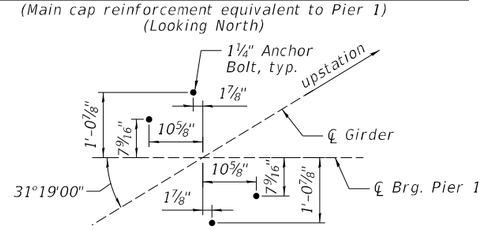

ANCHOR BOLT PLAN - PIER 1

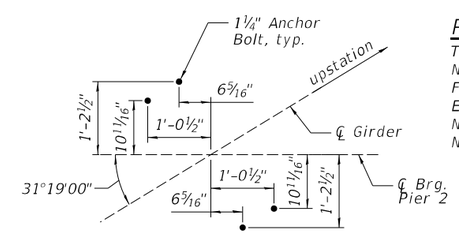

ANCHOR BOLT PLAN - PIER 2

benesch
Alfred Benesch & Company
35 W Wacker Drive, Suite 3300
Chicago, Illinois 60601
312.969.0450 Job No. 10800

USER NAME =	DESIGNED - AAB	REVISED -	
	CHECKED - JHG	REVISED -	
PLOT SCALE =	DRAWN - KMS	REVISED -	
PLOT DATE =	CHECKED - JHG	REVISED -	

STATE OF ILLINOIS
DEPARTMENT OF TRANSPORTATION

PIER DETAILS (1 OF 2)
STRUCTURE NO. 101-0210 & 101-0211

SHEET 84 OF 92 SHEETS

F.A.I. RTE.	SECTION	COUNTY	TOTAL SHEETS	SHEET NO.
39	(201-3)R & (4-1, 5)R	WINNEBAGO	1685	687
		CONTRACT NO. 64C24		
		ILLINOIS	FED. AID PROJECT	

MODEL: $MODELNAMES
FILE NAME: c:\pwworkdir\benesch projects\projects\dms65238\D264C24-1010210_0211-sh-pierdtls4.dgn
2/11/2025 9:36:51 AM

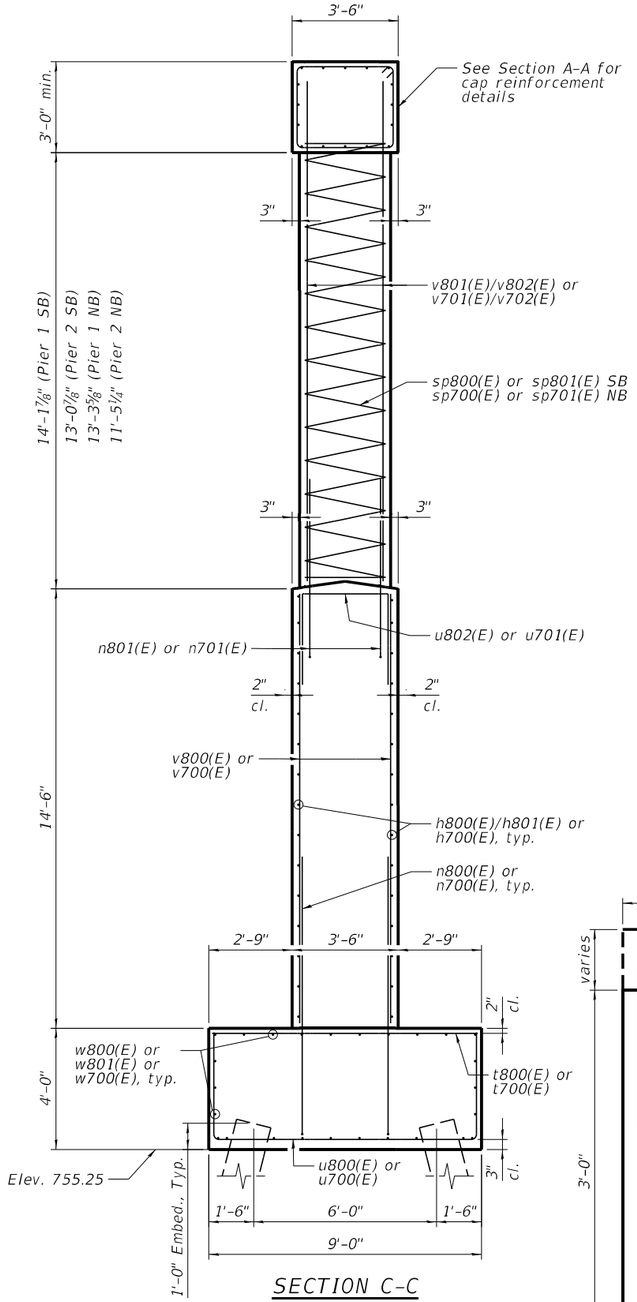

SECTION C-C

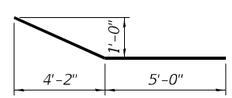

BAR s705(E)/s805(E)

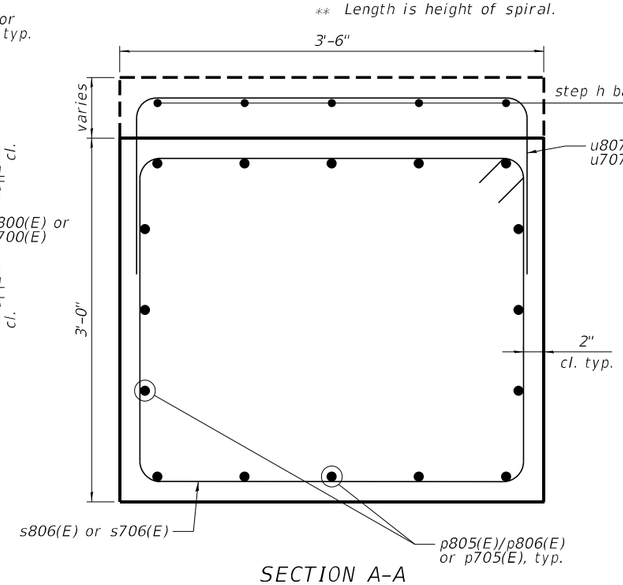

SECTION A-A

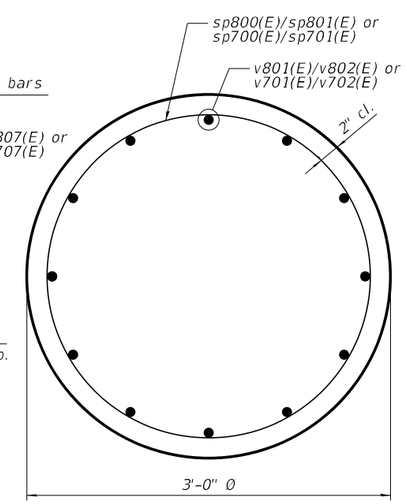

SECTION B-B

PIER 1 BILL OF MATERIAL SB (SN 101-0210)

	Bar	No.	Size	Length	Shape
	h800(E)	96	#7	33'-6"	
	h801(E)	64	#7	27'-6"	
	h805(E)	10	#6	36'-0"	
	h806(E)	5	#6	19'-10"	
	n800(E)	286	#7	9'-2"	
	n801(E)	120	#9	9'-0"	
	p805(E)	48	#7	36'-0"	
	p806(E)	32	#7	27'-0"	
	s805(E)	5	#7	9'-3"	
	s806(E)	170	#6	12'-8"	
**	sp800(E)	10	#5	14'-2"	
	t800(E)	144	#7	8'-8"	
	u800(E)	156	#8	15'-10"	
	u801(E)	15	#7	15'-3"	
	u802(E)	141	#7	10'-0"	
	u805(E)	12	#6	8'-6"	
	u806(E)	9	#7	13'-2"	
	u807(E)	88	#6	7'-2"	
	v800(E)	286	#7	14'-4"	
	v801(E)	120	#9	16'-8"	
	w800(E)	78	#6	36'-0"	
	w801(E)	52	#6	29'-0"	
	Structure Excavation			Cu. Yd.	1659
	Concrete Structures			Cu. Yd.	553.8
	Reinforcement Bars, Epoxy Coated			Pound	65,520
	Furnishing Metal Shell Piles 14"x0.312"			Foot	546
	Driving Piles			Foot	546
	Pile Shoes			Each	40
	Test Pile Metal Shells			Each	1

PIER 2 BILL OF MATERIAL SB (SN 101-0210)

	Bar	No.	Size	Length	Shape
	h800(E)	96	#7	33'-6"	
	h801(E)	64	#7	27'-6"	
	h805(E)	10	#6	36'-0"	
	h806(E)	5	#6	19'-10"	
	h807(E)	15	#6	35'-0"	
	n800(E)	286	#7	9'-2"	
	n801(E)	120	#9	9'-0"	
	p805(E)	48	#7	36'-0"	
	p806(E)	32	#7	27'-0"	
	s805(E)	5	#7	9'-3"	
	s806(E)	170	#6	12'-8"	
**	sp801(E)	10	#5	13'-1"	
	t800(E)	144	#7	8'-8"	
	u800(E)	156	#8	15'-10"	
	u801(E)	15	#7	15'-3"	
	u802(E)	141	#7	10'-0"	
	u805(E)	12	#6	8'-6"	
	u806(E)	10	#7	13'-2"	
	u807(E)	88	#6	7'-2"	
	v800(E)	286	#7	14'-4"	
	v802(E)	120	#9	15'-7"	
	w800(E)	78	#6	36'-0"	
	w801(E)	52	#6	29'-0"	
	Structure Excavation			Cu. Yd.	1196
	Concrete Structures			Cu. Yd.	557.0
	Reinforcement Bars, Epoxy Coated			Pound	65,900
	Furnishing Metal Shell Piles 14"x0.312"			Foot	546
	Driving Piles			Foot	546
	Pile Shoes			Each	40
	Test Pile Metal Shells			Each	1

** Length is height of spiral.

PIER 1 BILL OF MATERIAL NB (SN 101-0211)

	Bar	No.	Size	Length	Shape
	h700(E)	192	#7	27'-6"	
	h705(E)	15	#6	26'-0"	
	h706(E)	10	#6	30'-0"	
	h707(E)	15	#6	32'-0"	
	n700(E)	284	#7	9'-2"	
	n701(E)	120	#9	9'-0"	
	p705(E)	96	#7	29'-0"	
	s705(E)	5	#7	9'-3"	
	s706(E)	168	#6	12'-8"	
**	sp700(E)	10	#5	13'-4"	
	t700(E)	143	#7	8'-8"	
	u700(E)	156	#8	15'-10"	
	u701(E)	140	#7	10'-0"	
	u702(E)	15	#7	15'-3"	
	u705(E)	12	#6	8'-6"	
	u706(E)	10	#7	13'-2"	
	u707(E)	130	#6	7'-2"	
	v700(E)	284	#7	14'-4"	
	v701(E)	120	#9	15'-10"	
	w700(E)	156	#6	29'-0"	
	Structure Excavation			Cu. Yd.	1647
	Concrete Structures			Cu. Yd.	557.1
	Reinforcement Bars, Epoxy Coated			Pound	67,880
	Furnishing Metal Shell Piles 14"x0.312"			Foot	1520
	Driving Piles			Foot	1520
	Pile Shoes			Each	40
	Test Pile Metal Shells			Each	2

PIER 2 BILL OF MATERIAL NB (SN 101-0211)

	Bar	No.	Size	Length	Shape
	h700(E)	192	#7	27'-6"	
	h705(E)	20	#6	26'-0"	
	h707(E)	15	#6	32'-0"	
	n700(E)	284	#7	9'-2"	
	n701(E)	120	#9	9'-0"	
	p705(E)	96	#7	29'-0"	
	s705(E)	5	#7	9'-3"	
	s706(E)	168	#6	12'-8"	
**	sp701(E)	10	#5	11'-6"	
	t700(E)	143	#7	8'-8"	
	u700(E)	156	#8	15'-10"	
	u701(E)	140	#7	10'-0"	
	u702(E)	15	#7	15'-3"	
	u705(E)	12	#6	8'-6"	
	u706(E)	11	#7	13'-2"	
	u707(E)	130	#6	7'-2"	
	v700(E)	284	#7	14'-4"	
	v702(E)	120	#9	13'-11"	
	w700(E)	156	#6	29'-0"	
	Structure Excavation			Cu. Yd.	1188
	Concrete Structures			Cu. Yd.	558.4
	Reinforcement Bars, Epoxy Coated			Pound	66,870
	Furnishing Metal Shell Piles 14"x0.312"			Foot	1520
	Driving Piles			Foot	1520
	Pile Shoes			Each	40
	Test Pile Metal Shells			Each	2

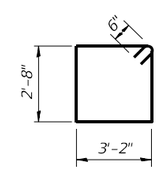

BAR s806(E)/s706(E)

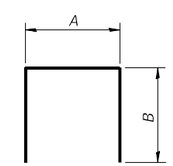

Pier U bars

A & B DIMENSIONS

Bar	A	B
u800(E)	8'-8"	3'-7"
u700(E)	8'-8"	3'-7"
u802(E)	3'-2"	3'-5"
u701(E)	3'-2"	3'-5"
u806(E)	3'-2"	5'-0"
u706(E)	3'-2"	5'-0"
u805(E)	3'-2"	2'-8"
u705(E)	3'-2"	2'-8"
u807(E)	3'-2"	2'-0"
u707(E)	3'-2"	2'-0"

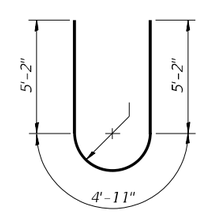

BAR u801(E)/u702(E)

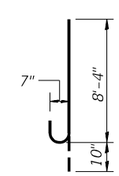

BAR n700(E)/n800(E)

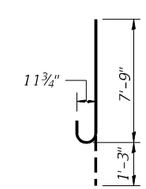

BAR n801(E)/n701(E)

benesch
Alfred Benesch & Company
35 W Wacker Drive, Suite 3300
Chicago, Illinois 60601
312-565-0455 Job No. 10800

USER NAME =	DESIGNED - AAB	REVISED -	
	CHECKED - JHG	REVISED -	
PLOT SCALE =	DRAWN - KMS	REVISED -	
PLOT DATE =	CHECKED - JHG	REVISED -	

STATE OF ILLINOIS
DEPARTMENT OF TRANSPORTATION

PIER DETAILS (2 OF 2)
STRUCTURE NO. 101-0210 & 101-0211

SHEET 85 OF 92 SHEETS

F.A.I. RTE.	SECTION	COUNTY	TOTAL SHEETS	SHEET NO.
39	(201-3)R & (4-1, 5)R	WINNEBAGO	1685	688
		CONTRACT NO. 64C24		
		ILLINOIS	FED. AID PROJECT	

MODEL: SMODELNAMES
FILE NAME: c:\pwworking\benesch projects\projects\dms65238\D264C24-1010210_0211-sht-pierdtls5.dgn
2/11/2025 9:36:55 AM

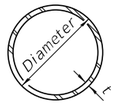

METAL SHELL PILE TABLE

Designation and outside diameter	Wall thickness t	Weight per foot (Lbs./ft.)	Inside volume (yd.³/ft.)
PP12	0.250"	31.40	0.0267
PP14	0.250"	36.75	0.0368
PP14	0.312"	45.65	0.0361
PP16	0.312"	52.32	0.0478
PP16	0.375"	62.64	0.0470

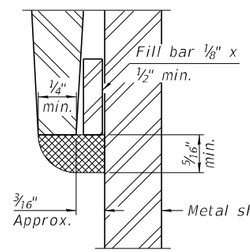

DETAIL A

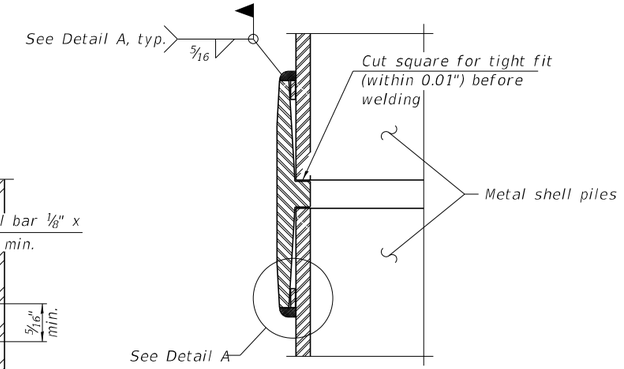

WELDED COMMERCIAL SPLICE

Notes:

The 1/8" x 1/2" min. fill bar may be constructed of 2 bars with a 1/8" max. gap between them.

Pile segments shall be driven to solid contact with splicer before welding.

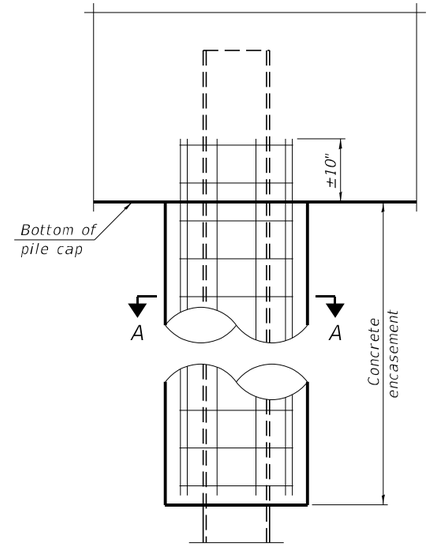

ELEVATION

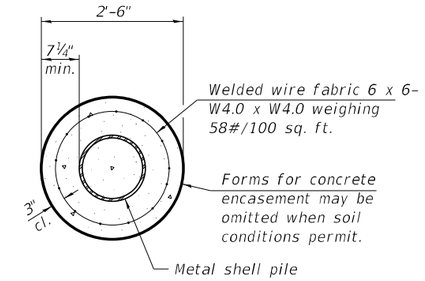

SECTION A-A

INDIVIDUAL PILE CONCRETE ENCASEMENT

(When specified)

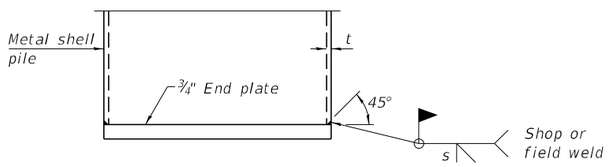

$s = t - 1/8"$

END PLATE ATTACHMENT

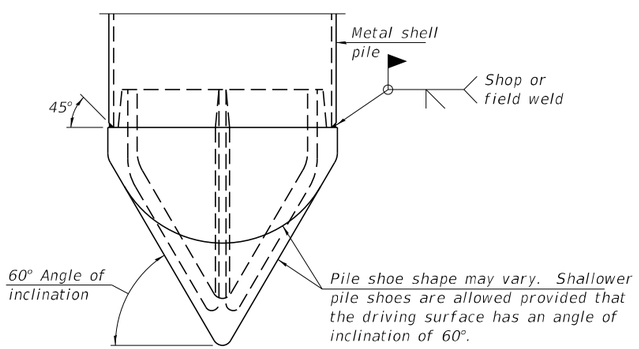

PILE SHOE ATTACHMENT

(When called for on the plans, the Contractor shall furnish metal shell pile shoes consisting of a single piece conical pile point as shown. The pile shoes shall be cast in one piece steel according to either ASTM A 148 Grade 80-50 or AASHTO M 103 Grade 65-35 and shall provide full bearing over the full circumference of the metal shell pile. The pile shoe shall have tapered leads to assure proper alignment and fitting and shall be secured to the pile with a circumferential weld).

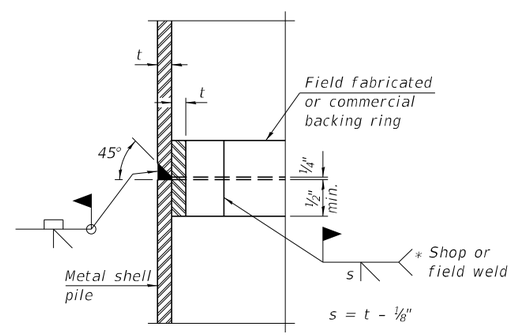

$s = t - 1/8"$

COMPLETE PENETRATION WELD SPLICE

* Field fabricated backing ring may be made from pile shell by removing segment to allow reducing circumference and vertically rejoin with partial joint penetration weld.

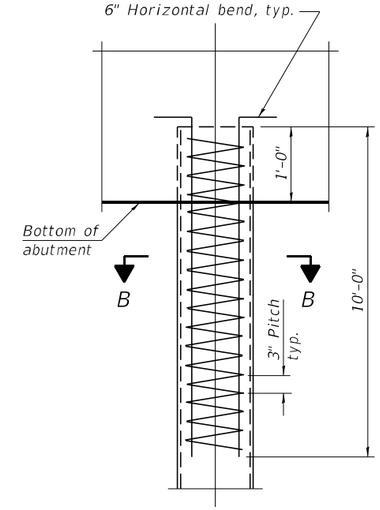

ELEVATION

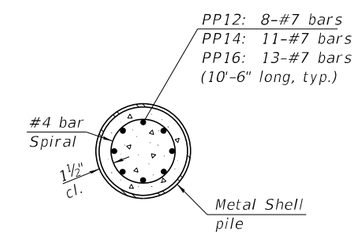

SECTION B-B

REINFORCEMENT AT ABUTMENTS

(Omit when concrete encasement is specified)

Note:

The metal shell piles shall be according to Article 1006.05 of the Standard Specifications.

F-MS 5-15-2023

MODEL: $MODELNAMES
FILE NAME: c:\pwworkdir\benesch projects\dms65238\D264C24-1010210_0211-sht-piledtls.dgn

2/11/2025 9:36:57 AM

benesch
Alfred Benesch & Company
35 W Wacker Drive, Suite 3300
Chicago, Illinois 60601
312-565-0150 Job No. 10800

USER NAME =	DESIGNED - AAB	REVISED -	
	CHECKED - MFH	REVISED -	
PLOT SCALE =	DRAWN - KMS	REVISED -	
PLOT DATE =	CHECKED - MFH	REVISED -	

STATE OF ILLINOIS
DEPARTMENT OF TRANSPORTATION

METAL SHELL PILE DETAILS
STRUCTURE NO. 101-0210 & 101-0211

SHEET 86 OF 92 SHEETS

F.A.I. RTE.	SECTION	COUNTY	TOTAL SHEETS	SHEET NO.
39	(201-3)R & (4-1, 5)R	WINNEBAGO	1685	689
		CONTRACT NO. 64C24		
		ILLINOIS	FED. AID PROJECT	

Notes:
All dimensions shall remain the same as shown on superstructure details, except dimension "A" which is to be revised as shown. Additional concrete needed to revise dimension "A" = 0.00348 cu. yds./ft.
Place full depth aluminum sheets as shown on superstructure details.
Replace all cork joint filler locations with a full thickness saw cut.

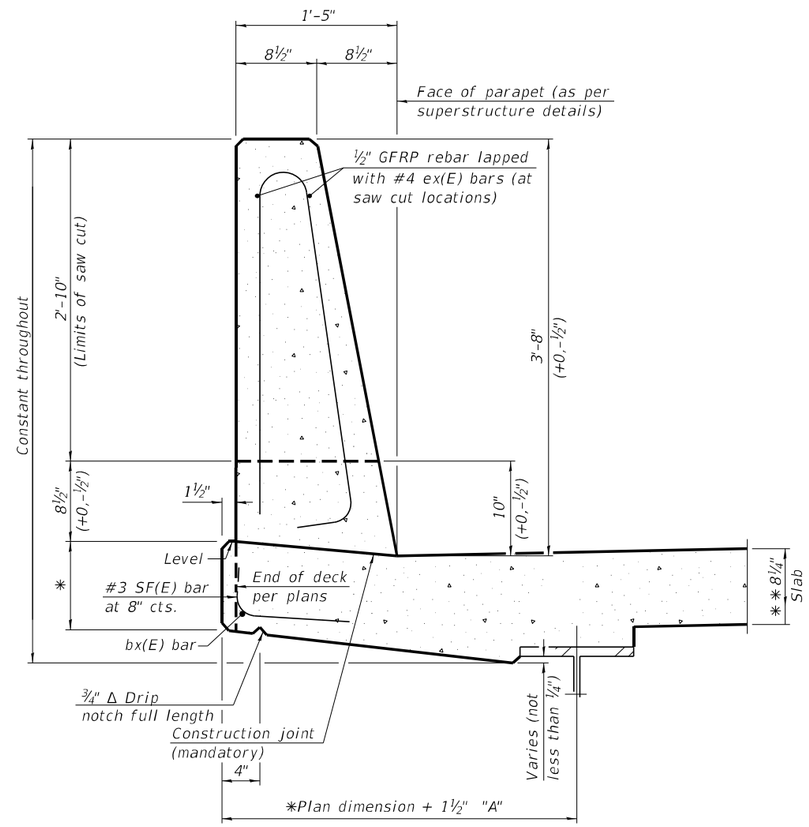

* See Superstructure Details.

** Prior to grinding.

44" CONCRETE-SLOPE PARAPET SECTION

(Showing dimensions, dx(E), and ½" Ø GFRP rebar)

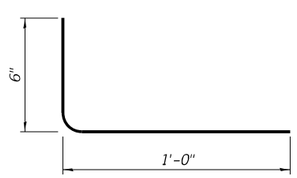

SF(E) BAR

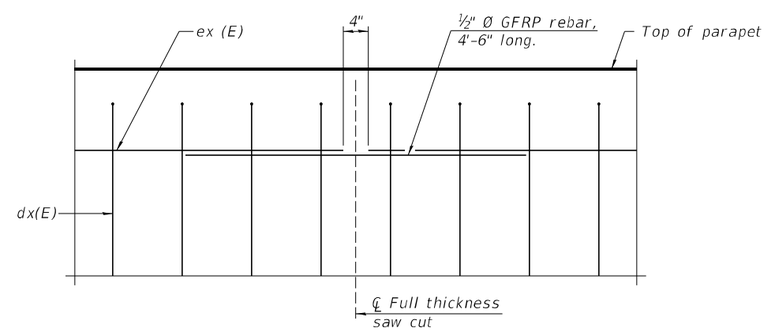

DETAIL - GFRP REBAR STIFFENING ELEVATION

(Place as shown in parapet section at each parapet joint location.)

MODEL: sMODELNAMES
FILE NAME: c:\pwworkdir\benesch projects\projects\dms65238\D264C24-1010210_0211-sht-slipform.dgn
2/11/2025 9:37:00 AM

benesch
Alfred Benesch & Company
35 W Wacker Drive, Suite 3300
Chicago, Illinois 60601
312-969-0450 Job No. 10800

USER NAME =	DESIGNED - MFH	REVISED -	
	CHECKED - TPS	REVISED -	
PLOT SCALE =	DRAWN - KMS	REVISED -	
PLOT DATE =	CHECKED - TPS	REVISED -	

STATE OF ILLINOIS
DEPARTMENT OF TRANSPORTATION

CONCRETE PARAPET SLIPFORMING OPTION
STRUCTURE NO. 101-0210 & 101-0211

SHEET 87 OF 92 SHEETS

F.A.I. RTE.	SECTION	COUNTY	TOTAL SHEETS	SHEET NO.
39	(201-3)R & (4-1, 5)R	WINNEBAGO	1685	690
		CONTRACT NO. 64C24		
	ILLINOIS	FED. AID PROJECT		

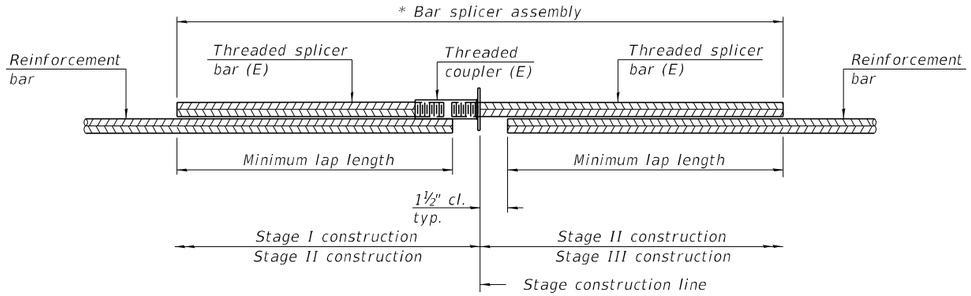

STANDARD BAR SPLICER ASSEMBLY PLAN

Only bar splicer assemblies as presented on the approved QPL list may be used.

Threaded splicer bar length = min. lap length + 1½" + 1 thread length

* Epoxy not required on Bar Splicer Assembly components used in conjunction with black bars.

Location	Bar size	No. assemblies required	Minimum lap length
NB Deck	#5	1203	3'-6"
NB Deck	#7	8	4'-8"
SB Deck	#5	1201	3'-6"
SB Deck	#7	8	4'-8"
SB S. Approach	#5	64	3'-4"
SB S. Approach	#8	32	4'-9"
SB N. Approach	#5	64	3'-4"
SB N. Approach	#8	32	4'-9"
NB S. Approach	#5	64	3'-4"
NB S. Approach	#8	32	4'-9"
NB N. Approach	#5	64	3'-4"
NB. N. Approach	#8	32	4'-9"
SB S. Abut.	#4	10	2'-11"
SB S. Abut.	#5	11	3'-7"
SB S. Abut.	#7	18	5'-0"
NB S. Abut.	#4	10	2'-11"
NB S. Abut.	#5	11	3'-7"
NB S. Abut.	#7	18	5'-0"
SB N. Abut.	#4	12	2'-11"
SB N. Abut.	#5	12	3'-7"
SB N. Abut.	#7	18	5'-0"
NB N. Abut.	#4	12	2'-11"
NB N. Abut.	#5	12	3'-7"
NB N. Abut.	#7	18	5'-0"
Pier 1 SB Footing	#6	26	4'-4"
Pier 2 SB Footing	#6	26	4'-4"
Pier 1 NB Footing	#6	26	4'-4"
Pier 2 NB Footing	#6	26	4'-4"
Pier 1 SB Crashwall	#7	32	5'-0"
Pier 2 SB Crashwall	#7	32	5'-0"
Pier 1 NB Crashwall	#7	32	5'-0"
Pier 2 NB Crashwall	#7	32	5'-0"
Pier 1 SB Cap	#7	16	5'-0"
Pier 2 SB Cap	#7	16	5'-0"
Pier 1 NB Cap	#7	16	5'-0"
Pier 2 NB Cap	#7	16	5'-0"
Pier 1 SB Cap	#6	5	4'-4"
Pier 2 SB Cap	#6	5	4'-4"
Pier 1 NB Cap	#6	10	4'-4"
Pier 2 NB Cap	#6	10	4'-4"

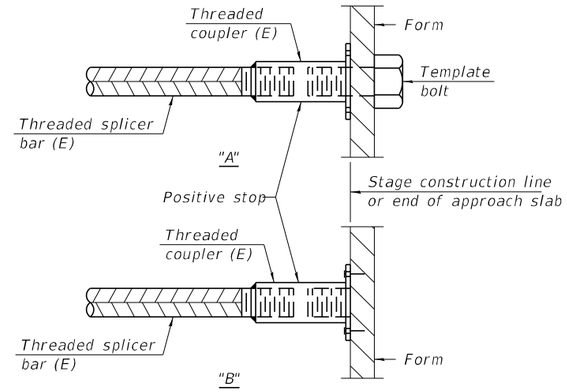

INSTALLATION AND SETTING METHODS

"A" : Set bar splicer assembly by means of a template bolt.

"B" : Set bar splicer assembly by nailing to wood forms or cementing to steel forms.

(E) : Indicates epoxy coating.

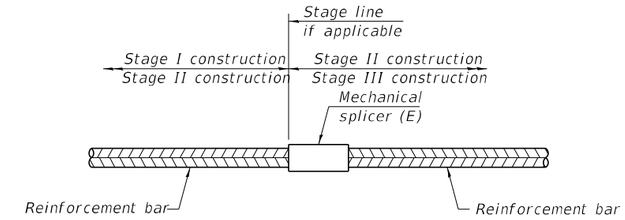

STANDARD MECHANICAL SPLICER

Location	Bar size	No. assemblies required
NB Deck	#7	9
SB Deck	#7	9
Pier 1 SB Footing	#7	10
Pier 2 SB Footing	#7	10
Pier 1 NB Footing	#7	10
Pier 2 NB Footing	#7	10
Pier 1 SB Footing	#8	10
Pier 2 SB Footing	#8	10
Pier 1 NB Footing	#8	10
Pier 2 NB Footing	#8	10

Notes:

Splicer bars shall be deformed with threaded ends and have a minimum 60 ksi yield strength.

All reinforcement shall be lapped and tied to the splicer bars.

Bar splicer assemblies shall be epoxy coated according to the requirements for reinforcement bars. See Section 508 of the Standard Specifications.

See approved list of bar splicer assemblies and mechanical splicers for alternatives.

BSD-1 5-15-2023

Illinois Department of Transportation
Division of Highways
Illinois Department of Transportation/D-2

SOIL BORING LOG

Date 5/19/08

ROUTE Bypass 20 DESCRIPTION P92-111-06 US Bypass 20 Bridge over U.P.R.R., .8 m. S. of Harrison Avenue LOGGED BY J. Strating

SECTION LOCATION Cherry Valley Twp. - 2 SW, SEC., TWP. 43N, RNG. 2E

COUNTY Winnebago DRILLING METHOD Hollow Stem Auger HAMMER TYPE CME-45 Automatic

STRUCT. NO.
Station

BORING NO. B-1f
Station 832+95
Offset 43.00ft Rt EB CL
Ground Surface Elev. 773.50 ft

Surface Water Elev. ft
Stream Bed Elev. 765.00 ft

Groundwater Elev.:
First Encounter 756.5 ft ▼
Upon Completion ft
After Hrs. ft

Description	Elev.	DEPTH (ft)	BLOWS (/6")	UCS Qu (tsf)	MOIST (%)
SOFT brown SILTY CLAY LOAM	771.50			0.3 P	20.0
STIFF brown SILTY CLAY LOAM	770.00		2 2 4	1.5 B	27.0
MEDIUM brown SILTY LOAM	767.50	-5	1 2 4	1.0 P	26.0
STIFF tan/gray SILTY CLAY LOAM	765.00		2 3 4	1.5 B	26.0
MEDIUM brown SANDY LOAM	762.00	-10	2 4 8	0.5 P	15.0
LOOSE tan moist fine SAND	760.00		4 3 5		
LOOSE tan very moist fine SAND	757.50	-15	1 4 4		
MEDIUM tan fine SAND	755.00		▼ 2 6 6		
Wash		-20	3		
LOOSE tan fine SAND (continued)	752.50		4 5		
MEDIUM tan fine SAND	750.00		8 13 11		
MEDIUM tan fine SAND	747.50	-25	4 9 7		
LOOSE tan fine SAND	744.50		0 2 7		
STIFF tan SILT	742.50	-30	3 3 7	1.0 P	26.0
STIFF tan/gray SILT with SAND lenses	739.50		3 5 10	1.7 P	22.0
MEDIUM tan dirty medium SAND with GRAVEL	737.50	-35	1 2 8		
VERY DENSE tan medium SAND with GRAVEL, bottom 2" LOAM	735.00	-40	13 26 25		
MEDIUM tan fine SAND, bottom 2" SILT (continued)	732.00		8 9		
MEDIUM gray SILT	729.50		8 12 14		
DENSE tan fine SAND with gray SILT lens	727.50	-45	0 14 22		
MEDIUM tan fine SAND	725.00		5 8 9		
DENSE tan clean medium SAND with GRAVEL	722.00	-50	14 17 31		
Wash HARD gray CLAY LOAM TILL	719.50		15 9 13	4.3 B	12.0
VERY DENSE tan/brown dirty SAND & GRAVEL with 2" TILL lens in middle	717.50	-55	17 30 33		
MEDIUM tan dirty medium SAND with GRAVEL	715.00		14 9 13		
		-60	18		
DENSE tan/gray dirty medium SAND with GRAVEL (continued)	712.50		20 22		
End of Boring		-65			
		-70			
		-75			
		-80			

The Unconfined Compressive Strength (UCS) Failure Mode is indicated by (B-Bulge, S-Shear, P-Penetrometer)
The SPT (N value) is the sum of the last two blow values in each sampling zone (AASHTO T206)

BBS, from 137 (Rev. 8-99)

Illinois Department of Transportation
Division of Highways
Illinois Department of Transportation/D-2

SOIL BORING LOG

Date 5/19/08

ROUTE Bypass 20 DESCRIPTION P92-111-06 US Bypass 20 Bridge over U.P.R.R., .8 m. S. of Harrison Avenue LOGGED BY J. Strating

SECTION LOCATION Cherry Valley Twp. - 2 SW, SEC., TWP. 43N, RNG. 2E

COUNTY Winnebago DRILLING METHOD Hollow Stem Auger HAMMER TYPE CME-45 Automatic

STRUCT. NO.
Station

BORING NO. B-1f
Station 832+95
Offset 43.00ft Rt EB CL
Ground Surface Elev. 773.50 ft

Surface Water Elev. ft
Stream Bed Elev. 765.00 ft

Groundwater Elev.:
First Encounter 756.5 ft ▼
Upon Completion ft
After Hrs. ft

The Unconfined Compressive Strength (UCS) Failure Mode is indicated by (B-Bulge, S-Shear, P-Penetrometer)
The SPT (N value) is the sum of the last two blow values in each sampling zone (AASHTO T206)

BBS, from 137 (Rev. 8-99)

Along CL I-39, Boring B-1f is located at Sta. 2684+96, 94.5' RT

MODEL: SMODELNAMES
FILE NAME: c:\pwworkdir\benesch projects\dms65238\D264C24-1010210_0211-sht-soil-1.dgn

benesch
Alfred Benesch & Company
35 W Wacker Drive, Suite 3300
Chicago, Illinois 60601
312-565-0450 Job No. 10800

USER NAME =	DESIGNED - AAB	REVISED -	
	CHECKED - MFH	REVISED -	
PLOT SCALE =	DRAWN - KMS	REVISED -	
PLOT DATE =	CHECKED - MFH	REVISED -	

STATE OF ILLINOIS
DEPARTMENT OF TRANSPORTATION

SOIL BORING LOGS (1 OF 4)
STRUCTURE NO. 101-0210 & 101-0211

SHEET 89 OF 92 SHEETS

F.A.I. RTE.	SECTION	COUNTY	TOTAL SHEETS	SHEET NO.
39	(201-3)R & (4-1, 5)R	WINNEBAGO	1685	692

CONTRACT NO. 64C24

ILLINOIS | FED. AID PROJECT

2/11/2025 9:37:05 AM

Illinois Department of Transportation
Division of Highways
Illinios Department of Transportation/D-2

SOIL BORING LOG

Date 5/21/08

ROUTE Bypass 20 DESCRIPTION P92-111-06 US Bypass 20 Bridge over U.P.R.R., .8 m. S. of Harrison Avenue LOGGED BY J. Strating

SECTION LOCATION Cherry Valley Twp. - 2 SW, SEC. , TWP. 43N, RNG. 1E

COUNTY Winnebago DRILLING METHOD Hollow Stem Auger HAMMER TYPE B-53 Diedrich Automatic

STRUCT. NO.
Station

BORING NO. B-2f
Station 832+07
Offset 37.00ft Lt WB CL
Ground Surface Elev. 772.00 ft

Surface Water Elev. ft
Stream Bed Elev. 765.00 ft

Groundwater Elev.:
First Encounter 750.0 ft
Upon Completion 747.5 ft
After Hrs. ft

Description	Elev.	DEPTH (ft)	BLOWS (/6")	UCS Qu (tsf)	MOIST (%)
STIFF brown SILTY CLAY LOAM				1.0 P	18.0
	770.00		4		
STIFF tan/brown SILTY CLAY LOAM			6 7	1.5 P	26.0
	768.50				
SOFT tan/brown SILTY CLAY LOAM		-5	2 2 8	0.4 B	24.0
	765.50				
MEDIUM tan LOAM TILL			2 5 6	0.9 B	12.0
	763.50				
STIFF tan LOAM TILL		-10	6 7 7	2.0 P	8.0
	761.00				
VERY STIFF tan LOAM TILL			6 10 14	2.3 P	10.0
	758.50				
HARD tan LOAM TILL		-15	24 40 45	4.5 P	6.0
	756.00				
HARD tan LOAM TILL			21 100/11"		6.0
	753.50				
HARD tan LOAM TILL		-20	25		
HARD tan LOAM TILL *(continued)*			45 50		6.0
	751.00				
HARD tan LOAM TILL			20 100/7"		8.0
	748.50				
HARD tan LOAM TILL		-25	18 43 42		7.0
	746.00				
End of Boring		-30 -35 -40			

The Unconfined Compressive Strength (UCS) Failure Mode is indicated by (B-Bulge, S-Shear, P-Penetrometer)
The SPT (N value) is the sum of the last two blow values in each sampling zone (AASHTO T206)

BBS, from 137 (Rev. 8-99)

Illinois Department of Transportation
Division of Highways
Illinios Department of Transportation/D-2

SOIL BORING LOG

Date 5/22/08

ROUTE Bypass 20 DESCRIPTION P92-111-06 US Bypass 20 Bridge over U.P.R.R., .8 m. S. of Harrison Avenue LOGGED BY J. Strating

SECTION LOCATION Cherry Valley Twp. - 2 SW, SEC. , TWP. 43N, RNG. 1E

COUNTY Winnebago DRILLING METHOD Hollow Stem Auger HAMMER TYPE B-53 Diedrich Automatic

STRUCT. NO.
Station

BORING NO. B-3f
Station 834+20
Offset 5.00ft Rt Med CL
Ground Surface Elev. 792.00 ft

Surface Water Elev. ft
Stream Bed Elev. 765.00 ft

Groundwater Elev.:
First Encounter 784.5 ft
Upon Completion ft
After Hrs. ft

Description	Elev.	DEPTH (ft)	BLOWS (/6")	UCS Qu (tsf)	MOIST (%)
MEDIUM brown SILTY CLAY LOAM				0.5 P	11.0
	789.50				
STIFF brown SILTY CLAY LOAM			2 3 3	1.8 P	16.0
	788.00				
MEDIUM brown SILTY CLAY LOAM		-5	1 1 2	0.5 P	20.0
	785.50				
VERY STIFF brown CLAY LOAM			3 4 9	3.3 B	19.0
	783.00				
VERY STIFF brown CLAY LOAM		-10	7 9 10	2.0 B	14.0
	780.50				
VERY STIFF brown CLAY LOAM			4 7 7	3.3 B	20.0
	778.00				
STIFF brown/gray CLAY LOAM		-15	4 6 7	1.3 P	17.0
	775.50				
VERY STIFF brown/gray LOAM			7 10 11	2.5 S	13.0
	773.00	-20			
MEDIUM dark gray SILTY LOAM			3 4 5	0.8 P	28.0
	770.50				
STIFF tan/brown SILTY CLAY LOAM			1 3 3	1.5 B	26.0
	767.50	-25			
STIFF tan/gray LOAM TILL			4 7 10	1.8 P	9.0
	765.50				
HARD tan LOAM TILL			15 23 23	4.5 P	7.0
	763.00	-30			
HARD tan LOAM TILL			10 9 9	4.5 P	7.0
	760.50				
HARD tan LOAM TILL			5 14 26	4.5 P	8.0
	758.00	-35			
HARD tan LOAM TILL			16 28 36	4.5	9.0
	755.50				
HARD tan LOAM TILL (added water to help drilling)			17 100/10"		8.0
	753.00	-40			

The Unconfined Compressive Strength (UCS) Failure Mode is indicated by (B-Bulge, S-Shear, P-Penetrometer)
The SPT (N value) is the sum of the last two blow values in each sampling zone (AASHTO T206)

BBS, from 137 (Rev. 8-99)

Along CL I-39, Boring B-2f is located at Sta. 2684+08, 49.5' LT
Along CL I-39, Boring B-3f is located at Sta. 2686+21, 24.5' RT

MODEL: sMODELNAMES
FILE NAME: c:\pwworkdir\benesch projects\projects\dms65238\D264C24-1010210_0211-sht-soil-2.dgn

benesch
Alfred Benesch & Company
35 W Wacker Drive, Suite 3300
Chicago, Illinois 60601
312-565-0450 Job No. 10800

USER NAME =	DESIGNED - AAB	REVISED -	
	CHECKED - MFH	REVISED -	
PLOT SCALE =	DRAWN - KMS	REVISED -	
PLOT DATE =	CHECKED - MFH	REVISED -	

STATE OF ILLINOIS
DEPARTMENT OF TRANSPORTATION

SOIL BORING LOGS (2 OF 4)
STRUCTURE NO. 101-0210 & 101-0211

SHEET 90 OF 92 SHEETS

F.A.I. RTE.	SECTION	COUNTY	TOTAL SHEETS	SHEET NO.
39	(201-3)R & (4-1, 5)R	WINNEBAGO	1685	693
		CONTRACT NO. 64C24		
		ILLINOIS	FED. AID PROJECT	

2/11/2025 9:37:11 AM

Illinois Department of Transportation
Division of Highways
Illinois Department of Transportation/D-2

SOIL BORING LOG

Date 5/22/08

ROUTE Bypass 20 DESCRIPTION P92-111-06 US Bypass 20 Bridge over U.P.R.R., .8 m. S. of Harrison Avenue LOGGED BY J. Strating

SECTION _____ LOCATION Cherry Valley Twp. - 2 SW, SEC., TWP. 43N, RNG. 1E

COUNTY Winnebago DRILLING METHOD Hollow Stem Auger HAMMER TYPE B-53 Diedrich Automatic

STRUCT. NO. _____
Station _____

BORING NO. B-3f
Station 834+20
Offset 5.00ft Rt Med CL
Ground Surface Elev. 792.00 ft

Surface Water Elev. _____ ft
Stream Bed Elev. 765.00 ft

Groundwater Elev.:
First Encounter 784.5 ft ▼
Upon Completion _____ ft
After _____ Hrs. _____ ft

Description	Elev.	DEPTH (ft)	BLOWS (/6")	UCS Qu (tsf)	MOIST (%)
HARD tan LOAM TILL			39		
			100/12"		8.0
	750.50				
HARD tan LOAM TILL			29		
			100/10"		9.0
	748.00				
HARD tan LOAM TILL		-45	100/9"		
					9.0
	745.50				
End of Boring					
		-50			
		-55			
		-60			

The Unconfined Compressive Strength (UCS) Failure Mode is indicated by (B-Bulge, S-Shear, P-Penetrometer)
The SPT (N value) is the sum of the last two blow values in each sampling zone (AASHTO T206)

BBS, from 137 (Rev. 8-99)

Illinois Department of Transportation
Division of Highways
Illinois Department of Transportation/D-2

SOIL BORING LOG

Date 6/12/08

ROUTE Bypass 20 DESCRIPTION P92-111-06 US Bypass 20 Bridge over U.P.R.R., .8 m. S. of Harrison Avenue LOGGED BY W. Garza

SECTION _____ LOCATION Cherry Valley Twp. - 2 SW, SEC., TWP. 43N, RNG. 1E

COUNTY Winnebago DRILLING METHOD Hollow Stem Auger HAMMER TYPE B-53 Diedrich Automatic

STRUCT. NO. _____
Station _____

BORING NO. B-4f
Station 830+74
Offset 2.00ft Lt Med CL
Ground Surface Elev. 793.00 ft

Surface Water Elev. _____ ft
Stream Bed Elev. 765.00 ft

Groundwater Elev.:
First Encounter 755.5 ft ▼
Upon Completion _____ ft
After _____ Hrs. _____ ft

Description	Elev.	DEPTH (ft)	BLOWS (/6")	UCS Qu (tsf)	MOIST (%)
STIFF brown SILTY CLAY LOAM				1.1	17.0
				P	
	790.50				
STIFF brown LOAM			2		
			3	1.1	19.0
	789.00		4	B	
STIFF brown SILTY CLAY LOAM		-5	2		
			2	1.2	25.0
	786.50		3	B	
MEDIUM gray LOAM			1		
			2	0.7	24.0
	784.00		6	S	
STIFF gray SILTY CLAY LOAM with SAND lens		-10	5		
			5	1.2	23.0
	781.50		8	B	
STIFF gray/brown LOAM			3		
			7	1.2	17.0
	779.00		8	B	
VERY STIFF gray LOAM		-15	5		
			5	2.5	22.0
	776.50		8	B	
VERY STIFF tan SANDY LOAM			5		
			6	2.8	9.0
	774.00		5	P	
		-20			
STIFF redish brown CLAY LOAM			3		
			4	2.0	15.0
	771.50		7	B	
MEDIUM dark gray SILTY LOAM			1		
			3	0.8	32.0
	769.00		5	S	
STIFF gray SILTY CLAY LOAM		-25	3		
			3	1.7	25.0
	766.50		6	B	
MEDIUM gray SANDY LOAM with SAND lens			1		
			3	0.6	17.0
	763.50		8	B	
VERY STIFF tan SANDY LOAM TILL		-30	4		
			4	2.5	9.0
	761.50		8	P	
HARD tan SANDY LOAM TILL			10		
			13	4.5	8.0
	759.00		17	P	
VERY DENSE tan SANDY LOAM TILL		-35	12		
			22		
	756.50		32		
VERY DENSE tan SANDY LOAM TILL with SAND lens		▼	3		
			16		
	753.50		35		
		-40			

The Unconfined Compressive Strength (UCS) Failure Mode is indicated by (B-Bulge, S-Shear, P-Penetrometer)
The SPT (N value) is the sum of the last two blow values in each sampling zone (AASHTO T206)

BBS, from 137 (Rev. 8-99)

Along CL I-39, Boring B-3f is located at Sta. 2686+21, 24.5' RT
Along CL I-39, Boring B-4f is located at Sta. 2682+75, 17.5' RT

MODEL: sMODELNAMES
FILE NAME: c:\pwworkdir\benesch projects\projects\dms65238\D264C24-1010210_0211-sht-soil-3.dgn

benesch
Alfred Benesch & Company
35 W Wacker Drive, Suite 3300
Chicago, Illinois 60601
312-565-0450 Job No. 10800

USER NAME =	DESIGNED - AAB	REVISED -	
	CHECKED - MFH	REVISED -	
PLOT SCALE =	DRAWN - KMS	REVISED -	
PLOT DATE =	CHECKED - MFH	REVISED -	

STATE OF ILLINOIS
DEPARTMENT OF TRANSPORTATION

SOIL BORING LOGS (3 OF 4)
STRUCTURE NO. 101-0210 & 101-0211

SHEET 91 OF 92 SHEETS

F.A.I. RTE.	SECTION	COUNTY	TOTAL SHEETS	SHEET NO.
39	(201-3)R & (4-1, 5)R	WINNEBAGO	1685	694

CONTRACT NO. 64C24

ILLINOIS | FED. AID PROJECT

2/11/2025 9:37:16 AM

Illinois Department of Transportation
Division of Highways
Illinois Department of Transportation/D-2

SOIL BORING LOG

Date 6/12/08

ROUTE Bypass 20 DESCRIPTION P92-111-06 US Bypass 20 Bridge over U.P.R.R., .8 m. S. of Harrison Avenue LOGGED BY W. Garza

SECTION LOCATION Cherry Valley Twp. - 2 SW, SEC. , TWP. 43N, RNG. 1E

COUNTY Winnebago DRILLING METHOD Hollow Stem Auger HAMMER TYPE B-53 Diedrich Automatic

STRUCT. NO.
Station

BORING NO. B-4f
Station 830+74
Offset 2.00ft Lt Med CL
Ground Surface Elev. 793.00 ft

Surface Water Elev. ft
Stream Bed Elev. 765.00 ft

Groundwater Elev.:
First Encounter 755.5 ft ▼
Upon Completion ft
After Hrs. ft

Description	Elev.	DEPTH (ft)	BLOWS (/6")	UCS Qu (tsf)	MOIST (%)
VERY SOFT tan SANDY LOAM TILL with SAND lens			26		
			22	3.3	9.0
	751.50		13	P	
VERY DENSE tan SANDY LOAM TILL			39		
			100/6"		
	749.00				
		-45			
VERY DENSE tan SANDY LOAM TILL			100/10"		
	746.50				
VERY DENSE tan fine SAND			12		
			22		
	744.00		47		
		-50			
VERY DENSE tan clean medium coarse SAND			38		
			100/10"		
	741.50				
End of Boring					
		-55			
		-60			

The Unconfined Compressive Strength (UCS) Failure Mode is indicated by (B-Bulge, S-Shear, P-Penetrometer)
The SPT (N value) is the sum of the last two blow values in each sampling zone (AASHTO T206)

BBS, from 137 (Rev. 8-99)

Along CL I-39, Boring B-4f is located at Sta. 2682+75, 17.5' RT

Bench Mark: B.M. 405 – N-2030863.68, E-2621037.13 – Elev. 770.67 – N.W. bolt on northerly overhead sign post of "Belvidere Exit 122A" sign. Approx. 400' into ramp. (East side of Ramp).

Existing SN 101-0071 & SN 101-0072 built as Section 5-HB in 1963. In 1990 the dual structures were widened and rehabilitated. Both structures consist of four span concrete deck on continuous steel wide flange superstructures supported by concrete piers and spill through abutments. Both structures are 228'-1" back to back of abutments. SN 101-0071 width varies from 52'-8" to 56'-7". SN 101-0072 width varies from 52'-10" to 56'-4¾". Traffic to be maintained utilizing staged construction.

No Salvage.

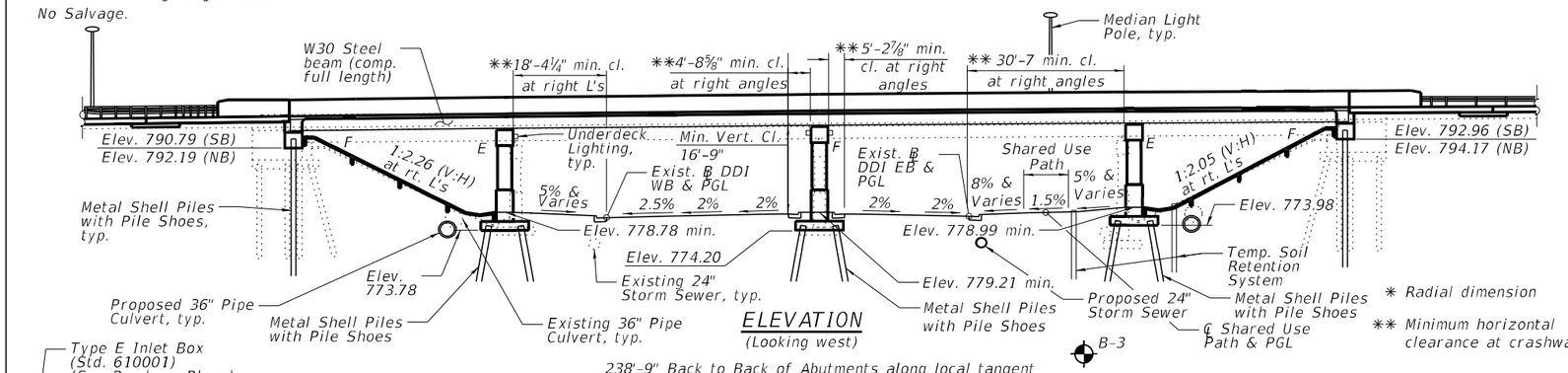

ELEVATION
(Looking west)

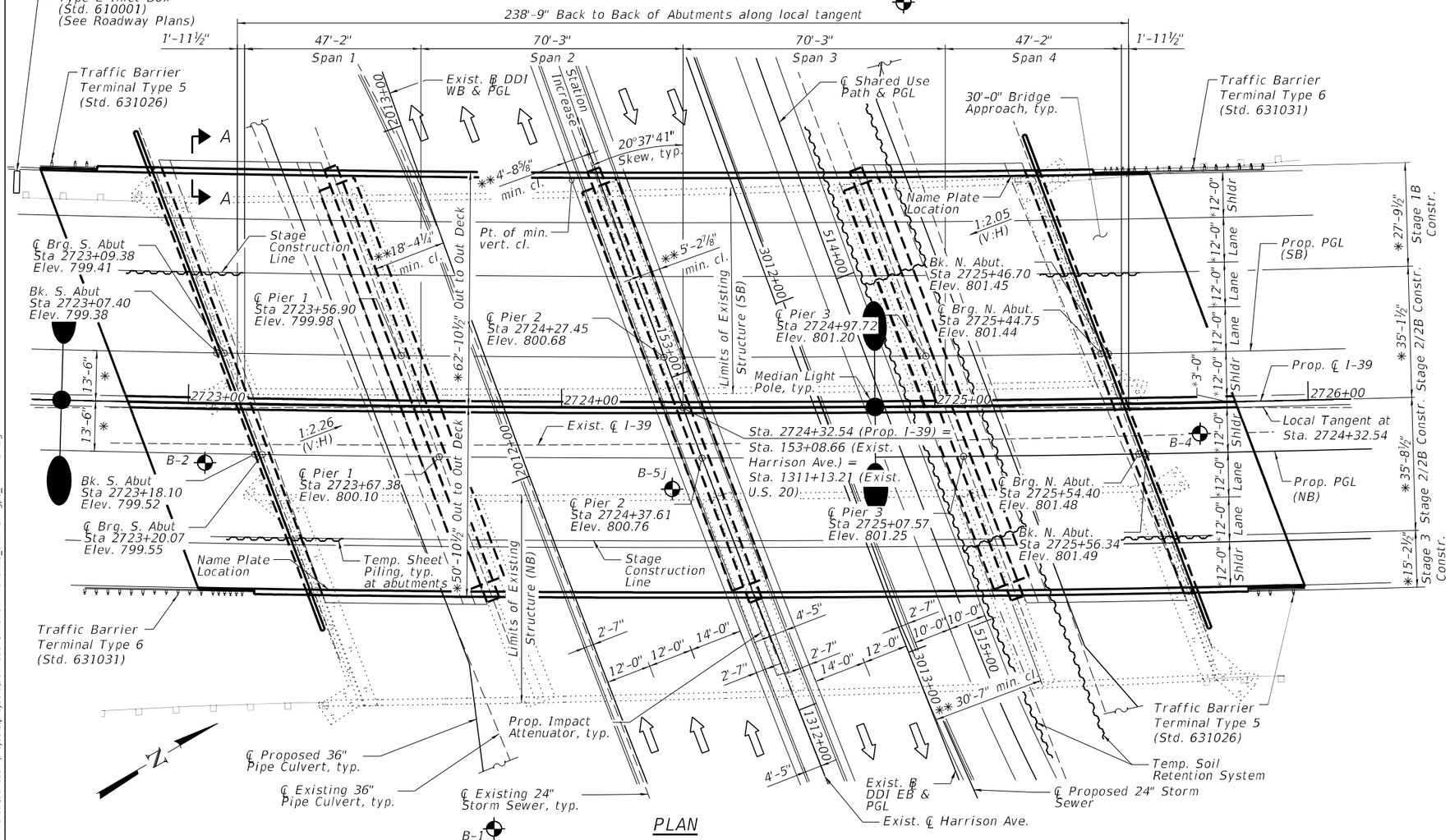

PLAN

DESIGN SPECIFICATIONS

2020 AASHTO LRFD Bridge Design Specifications, 9th Edition

LOADING HL-93

Allow 50#/sq. ft. for future wearing surface.

DESIGN STRESSES

FIELD UNITS

f'c = 3,500 psi (Substructure Concrete)
f'c = 4,000 psi (Superstructure Concrete)
fy = 60,000 psi (Reinforcement)
fy = 50,000 psi (Structural Steel)***
(M270 Grade 50)

*** All structural steel shall be metallized.

SEISMIC DATA

Seismic Performance Zone (SPZ) = 1
Design Spectral Acceleration at 1.0 sec. (S_{D1}) = 0.056g
Design Spectral Acceleration at 0.2 sec. (S_{DS}) = 0.101g
Soil Site Class = C

JAMES L. SURBER
081-007741
LICENSED STRUCTURAL ENGINEER
STATE OF ILLINOIS

EXPIRATION DATE: 11-30-2026
DATE: 05-16-2025

NOTES:

1. Elevations shown in Plan are final elevations after grinding.
2. Protective shielding shall be required along the full length of the existing structure during removal of the existing deck.
3. For Section A-A, see Sheet 3 of 81.

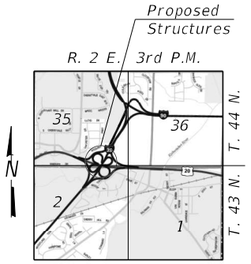

LOCATION SKETCH

GENERAL PLAN AND ELEVATION
I-39/U.S. 20 OVER HARRISON AVE.
F.A.I. ROUTE 39 - SECTION (201-3)R & (4-1, 5)R
WINNEBAGO COUNTY
STATION 2724+32.54
STRUCTURE NUMBER 101-0213 (NB)
STRUCTURE NUMBER 101-0214 (SB)

benesch
Alfred Benesch & Company
35 W Wacker Drive, Suite 3300
Chicago, Illinois 60601
312-565-0150 Job No. 10800

USER NAME =	DESIGNED - JPM/WKK	REVISED -	
	CHECKED - JLS	REVISED -	
PLOT SCALE =	DRAWN - KMS	REVISED -	
PLOT DATE =	CHECKED - JLS	REVISED -	

STATE OF ILLINOIS
DEPARTMENT OF TRANSPORTATION

SHEET 1 OF 81 SHEETS

F.A.I. RTE.	SECTION	COUNTY	TOTAL SHEETS	SHEET NO.
39	(201-3)R & (4-1, 5)R	WINNEBAGO	1685	696
		CONTRACT NO. 64C24		
		ILLINOIS	FED. AID PROJECT	

MODEL: $MODELNAME$
FILE NAME: c:\pwworking\benesch projects\projects\d0246997\D264C24-1010213_0214-sht-jpe_REV-INSP.dgn
5/16/2025 12:45:09 PM

INDEX OF SHEETS:

INDEX OF SHEETS (CONT.):

GENERAL NOTES:

1. These plans are for erection of the bridges. All work shown related to the Beam and Bearing Fabrication Contract (64U51) is for information only.
2. Fasteners shall be ASTM F 3125 Grade A325 Type 1, hot dip galvanized bolts in metallized areas. Bolts 7/8" diameter, holes 15/16" diameter, unless otherwise noted. See Special Provision for "Metallizing of Structural Steel".
3. Calculated weight of Structural Steel (Grade 50) = 693,000 lbs. and Structural Steel (Grade 36) = 78,000 lbs.
4. FOR INFORMATION ONLY – All structural steel shall be metallized. See Special Provision for "Metallizing of Structural Steel."
5. No field welding is permitted except as specified in the contract documents.
6. Reinforcement bars designated (E) shall be epoxy coated.
7. If the Contractor elects to use cantilever forming brackets on the exterior beams, the brackets shall be placed at the same locations as required for the hardwood blocks in Article 503.06(b) of the Standard Specifications. If additional cantilever forming brackets are required, hardwood blocking shall be wedged between the exterior and first interior beam at each of these additional bracket locations.
8. Bearing seat surfaces shall be constructed or adjusted to the designated elevations within a tolerance of 1/8 in. (0.01 ft.). Adjustment shall be made either by grinding the surface or by shimming the bearings.
9. Concrete Sealer shall be applied to the exposed surface areas of Pier 2.
10. The existing structural steel coating contains lead. The Contractor shall take appropriate precautions to address the presence of lead on this project.
11. It shall be the Contractor's responsibility to verify the location of all utilities prior to starting construction.
12. FOR INFORMATION ONLY – Exterior fascia and bottom of bottom flange areas shall be metalized and shop painted with System 3 (see detail this sheet). The color of the final finish coat of paint of fascia areas shall be Blue, Munsell No. 10B 3/6. See Special Provision for "Metallizing of Structural Steel." The interior metalized areas shall be painted with System 1.
13. It is anticipated that the structural steel and bearings will be fabricated by June 1, 2026 for Stage 1, June 1, 2027 for Stage 2, and June 1, 2028 for Stage 3. The delivery dates shall be coordinated with IDOT and the Contractor responsible for Contract No. 64U51.

TOTAL BILL OF MATERIAL

ITEM	UNIT	SUPER	SUB	TOTAL
Removal of Existing Structures No. 5	Each	0.5	0.5	1
Removal of Existing Structures No. 6	Each	0.5	0.5	1
Protective Shield	Sq. Yd.	2,730		2,730
Structure Excavation	Cu. Yd.		1,589	1,589
Concrete Structures	Cu. Yd.		1,248.9	1,248.9
Concrete Superstructure	Cu. Yd.	955.0		955.0
Protective Coat	Sq. Yd.	4,135		4,135
Concrete Superstructure (Approach Slab)	Cu. Yd.	321.9		321.9
Erecting Structural Steel	L. Sum	0.20		0.20
Stud Shear Connectors	Each	21,744		21,744
Reinforcement Bars, Epoxy Coated	Pound	371,400	180,370	551,770
Bar Splicers	Each	2,063	582	2,645
Mechanical Splicers	Each	28		28
Slope Wall 4 Inch	Sq. Yd.		1,243	1,243
Furnishing Metal Shell Piles 14" x 0.312"	Foot		2,745	2,745
Driving Piles	Foot		2,745	2,745
Test Pile Metal Shells	Each		10	10
Pile Shoes	Each		130	130
Name Plates	Each	2		2
Erecting Elastomeric Bearing Assembly, Type I	Each	32		32
Anchor Bolts, 1"	Each		160	160
Temporary Sheet Piling	Sq. Ft.		2,162	2,162
Temporary Soil Retention System	Sq. Ft.		3,602	3,602
Granular Backfill for Structures	Cu. Yd.		320	320
Concrete Sealer	Sq. Ft.		4,407	4,407
Geocomposite Wall Drain	Sq. Yd.		180	180
Pipe Underdrains for Structures 4"	Foot		293	293
Bridge Deck Grooving (Longitudinal)	Sq. Yd.	1,979		1,979
Bar Terminators	Each	690	1,210	1,900
Pedestrian Rail (Special)	Foot		179	179
Diamond Grinding (Bridge Section)	Sq. Yd.	3,877		3,877
Temporary Shoring	Each		3	3

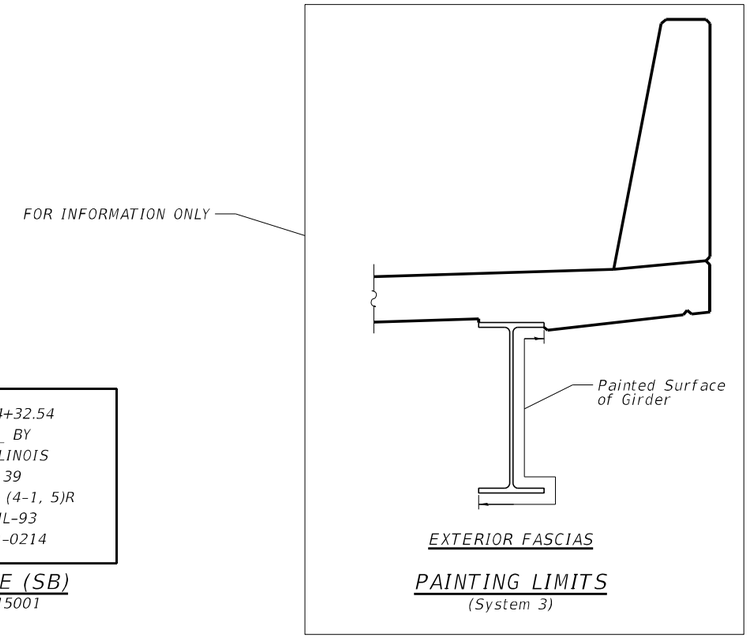

STATION 2724+32.54
BUILT 202_ BY
STATE OF ILLINOIS
F.A.I. RT. 39
SEC. (201-3)R & (4-1, 5)R
LOADING HL-93
STR. NO. 101-0213

NAME PLATE (NB)
See Std. 515001

STATION 2724+32.54
BUILT 202_ BY
STATE OF ILLINOIS
F.A.I. RT. 39
SEC. (201-3)R & (4-1, 5)R
LOADING HL-93
STR. NO. 101-0214

NAME PLATE (SB)
See Std. 515001

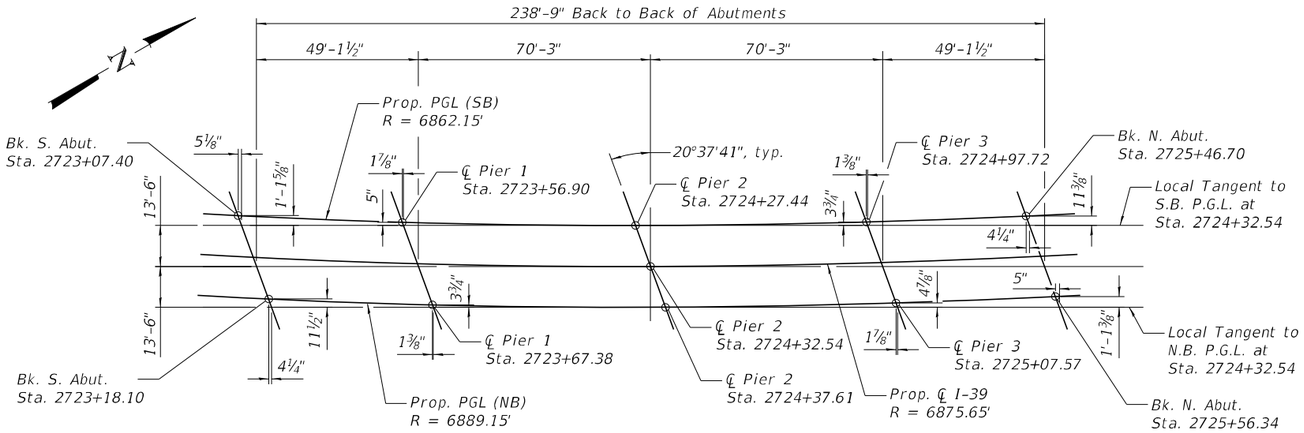

OFFSET SKETCH

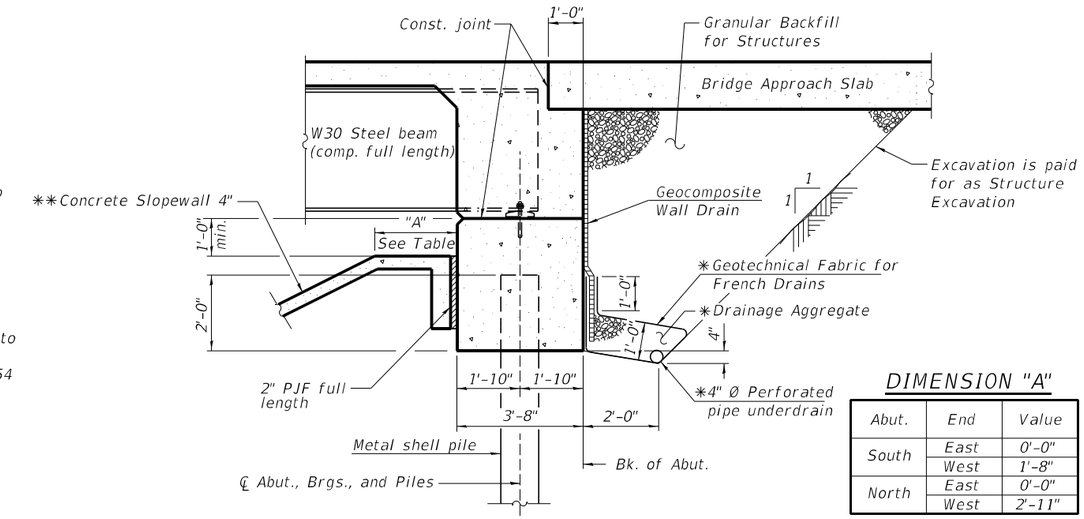

SECTION THRU INTEGRAL ABUTMENT

(Horiz. dim. at Rt. L's)

DIMENSION "A"

Abut.	End	Value
South	East	0'-0"
	West	1'-8"
North	East	0'-0"
	West	2'-11"

* Included in the cost of Pipe Underdrains for Structures 4".

Note: All drainage system components shall extend to 2'-0" from the end of each wingwall except an outlet pipe shall extend until intersecting with the side slopes. The pipes shall drain into concrete headwalls. (See Article 601.05 of the Standard Specifications and Highway Standard 601101).

CURVE DATA F.A.I. I-39

P.I. STA. = 2724+62.27
Δ = 17° 40' 00" (LT)
D = 0° 50' 00"
R = 6,875.65'
T = 1,068.50'
L = 2,120.05'
E = 82.53'
S.E. = 3.0%
P.C. STA. = 2713+93.76
P.T. STA. = 2735+13.81

CURVE DATA HARRISON AVE.

P.I. STA. = 1311+92.30
Δ = 17° 55' 04" (LT)
D = 1° 00' 00"
R = 5,729.71'
T = 903.28'
L = 1,791.80'
E = 70.76'
P.C. STA. = 144+84.47
P.T. STA. = 1320+80.83

CURVE DATA SHARED USE PATH

P.I. STA. = 514+00.18
Δ = 2° 05' 42" (LT)
D = 1° 00' 32"
R = 5,679.12'
T = 103.84'
L = 207.65'
E = 0.95'
P.C. STA. = 512+96.34
P.T. STA. = 515+04.00

CURVE DATA DDI WB

P.I. STA. = 2011+92.52
Δ = 2° 29' 06" (RT)
D = 0° 59' 32"
R = 5,774.71'
T = 125.24'
L = 250.44'
E = 1.36'
P.C. STA. = 2010+67.28
P.T. STA. = 2013+17.72

CURVE DATA DDI EB

P.I. STA. = 3012+28.33
Δ = 2° 40' 19" (LT)
D = 1° 00' 21"
R = 5,696.68'
T = 132.86'
L = 265.66'
E = 1.55'
P.C. STA. = 3010+95.47
P.T. STA. = 3013+61.13

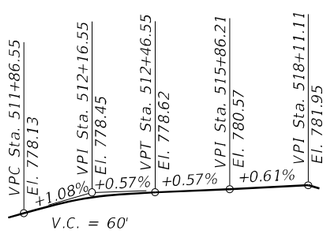

PROFILE GRADE SHARED USE PATH

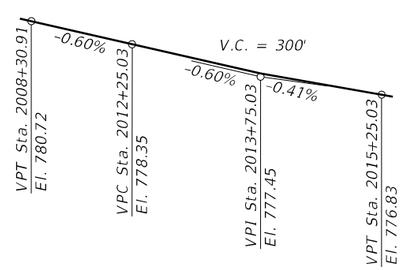

PROFILE GRADE DDI

Along WB PGL

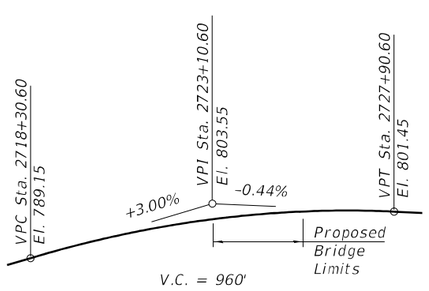

PROFILE GRADE I-39

Along NB & SB PGL

Note: The profile grade shows the final elevations after grinding. Up to ¼ inch may be ground off the bridge deck and the bridge approach slabs.

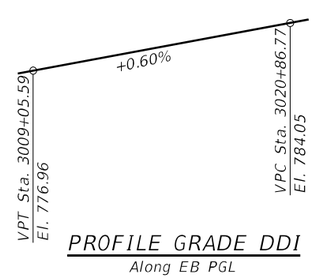

PROFILE GRADE DDI

Along EB PGL

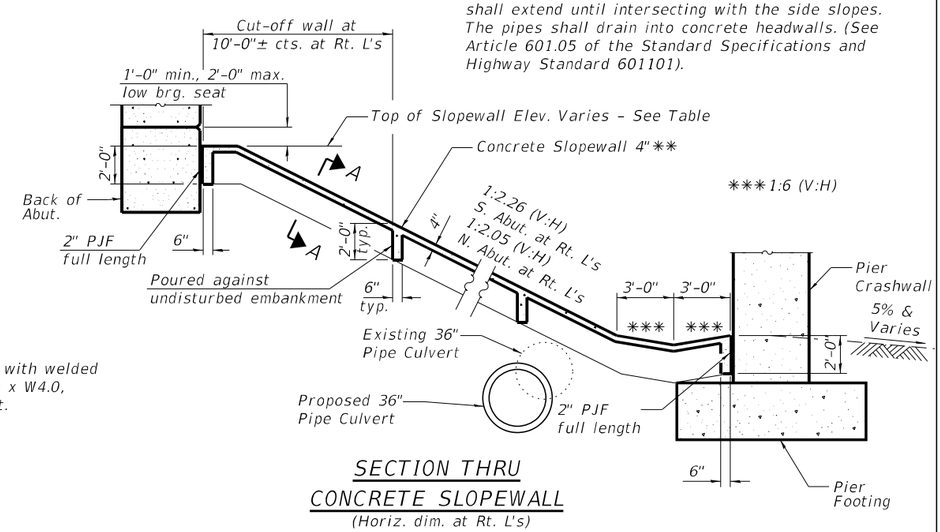

** Slope wall shall be reinforced with welded wire fabric, 6 in. x 6in. - W4.0 x W4.0, weighing 58 lbs. per 100 sq. ft.

SECTION THRU CONCRETE SLOPEWALL

(Horiz. dim. at Rt. L's)

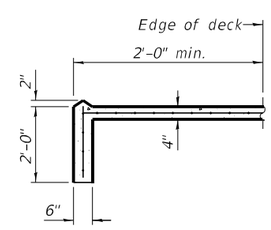

SECTION A-A

TOP OF SLOPEWALL ELEVATIONS

Abut.	End	Elev.
South	East	795.25
	West	793.29
North	East	797.09
	West	795.46

benesch
Alfred Benesch & Company
35 W Wacker Drive, Suite 3300
Chicago, Illinois 60601
312-565-0150 Job No. 10800

USER NAME =	DESIGNED - JPM	REVISED -	
	CHECKED - JLS	REVISED -	
PLOT SCALE =	DRAWN - KMS	REVISED -	
PLOT DATE =	CHECKED - JLS	REVISED -	

STATE OF ILLINOIS
DEPARTMENT OF TRANSPORTATION

GENERAL DETAILS
STRUCTURE NO. 101-0213 & 101-0214

SHEET 3 OF 81 SHEETS

F.A.I. RTE.	SECTION	COUNTY	TOTAL SHEETS	SHEET NO.
39	(201-3)R & (4-1, 5)R	WINNEBAGO	1685	698

CONTRACT NO. 64C24

ILLINOIS | FED. AID PROJECT

MODEL: sMODELNAMES
FILE NAME: c:\pwworkdir\benesch projects\projects\dms65240\D264C24-1010213_0214-sht-gendtls.dgn

4/22/2025 12:38:32 PM

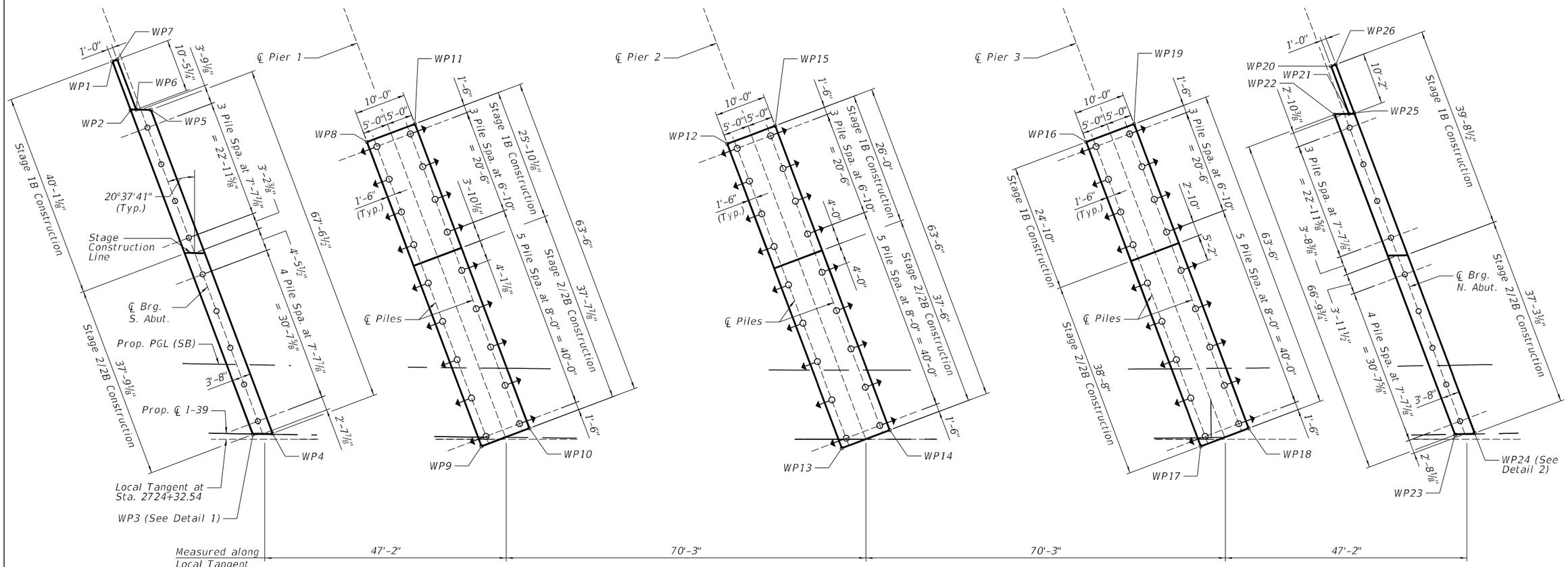

FOUNDATION LAYOUT PLAN (SOUTHBOUND)

S. ABUT. WORK POINTS

W.P.	Station	Offset
1	2722+83.80	72.23 Lt.
2	2722+87.62	62.79 Lt.
3	2723+12.80	00.09 Rt.
4	2723+16.64	00.16 Lt.
5	2722+91.56	62.92 Lt.
6	2722+88.66	62.92 Lt.
7	2722+84.74	72.60 Lt.

*All Stations and Offsets Are Measured from Prop. ℄ I-39

PIER 1 WORK POINTS

W.P.	Station	Offset
8	2723+34.26	57.37 Lt.
9	2723+57.48	01.77 Rt.
10	2723+66.80	01.85 Lt.
11	2723+43.65	61.02 Lt.

*All Stations and Offsets Are Measured from Prop. ℄ I-39

PIER 2 WORK POINTS

W.P.	Station	Offset
12	2724+05.24	57.65 Lt.
13	2724+27.84	01.72 Rt.
14	2724+37.20	01.80 Lt.
15	2724+14.67	61.21 Lt.

*All Stations and Offsets Are Measured from Prop. ℄ I-39

PIER 3 WORK POINTS

W.P.	Station	Offset
16	2724+75.95	57.93 Lt.
17	2724+97.94	01.68 Rt.
18	2725+07.34	01.75 Lt.
19	2724+85.42	61.39 Lt.

*All Stations and Offsets Are Measured from Prop. ℄ I-39

N. ABUT. WORK POINTS

W.P.	Station	Offset
20	2725+24.39	72.25 Lt.
21	2725+27.79	62.92 Lt.
22	2725+24.97	62.80 Lt.
23	2725+47.66	00.08 Rt.
24	2725+51.48	00.15 Lt.
25	2725+28.82	63.03 Lt.
26	2725+25.34	72.59 Lt.

*All Stations and Offsets Are Measured from Prop. ℄ I-39

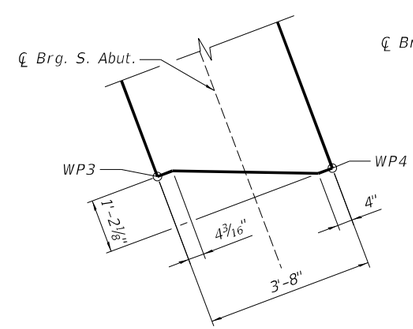

DETAIL 1

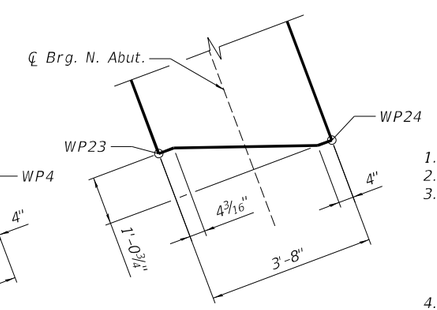

DETAIL 2

LEGEND

= Pile Battered 1H:6V

= Vertical Pile

NOTES:

1. See Sheets 63 to 72 of 81 for pier details.
2. See Sheets 56 to 62 of 81 for abutment details.
3. After demolition of the existing abutments, the Contractor shall verify that the existing back row vertical piles will not conflict with driving the proposed abutment batter piles. The Contractor shall inform the Engineer of any potential conflicts before driving piles.
4. Pile batter may be reduced for piles located directly adjacent to the stage lines where the pile leads conflict with the existing or proposed structure.
5. To miss existing piles, the pile driving tolerance relative to the plan position in Article 512.12 of the Standard Specifications may be increased to 1 ft. measured along centerline of bearing. The tolerance measured perpendicular to centerline of bearing shall remain at 6 in.

MODEL: $MODELNAME$
FILE NAME: c:\pwworkdir\benesch projects\projects\dms65240\D264C24-1010213_0214-sht-fdn-001.dgn

benesch
Alfred Benesch & Company
35 W Wacker Drive, Suite 3300
Chicago, Illinois 60601
312-969-0150 Job No. 10800

USER NAME =	DESIGNED - WKK	REVISED -	
	CHECKED - JHG	REVISED -	
PLOT SCALE =	DRAWN - KMS	REVISED -	
PLOT DATE =	CHECKED - JHG	REVISED -	

STATE OF ILLINOIS
DEPARTMENT OF TRANSPORTATION

FOUNDATION LAYOUT PLAN (SOUTHBOUND)
STRUCTURE NO. 101-0213 & 101-0214

SHEET 4 OF 81 SHEETS

F.A.I. RTE.	SECTION	COUNTY	TOTAL SHEETS	SHEET NO.
39	(201-3)R & (4-1, 5)R	WINNEBAGO	1685	699

CONTRACT NO. 64C24

ILLINOIS | FED. AID PROJECT

4/22/2025 12:38:38 PM

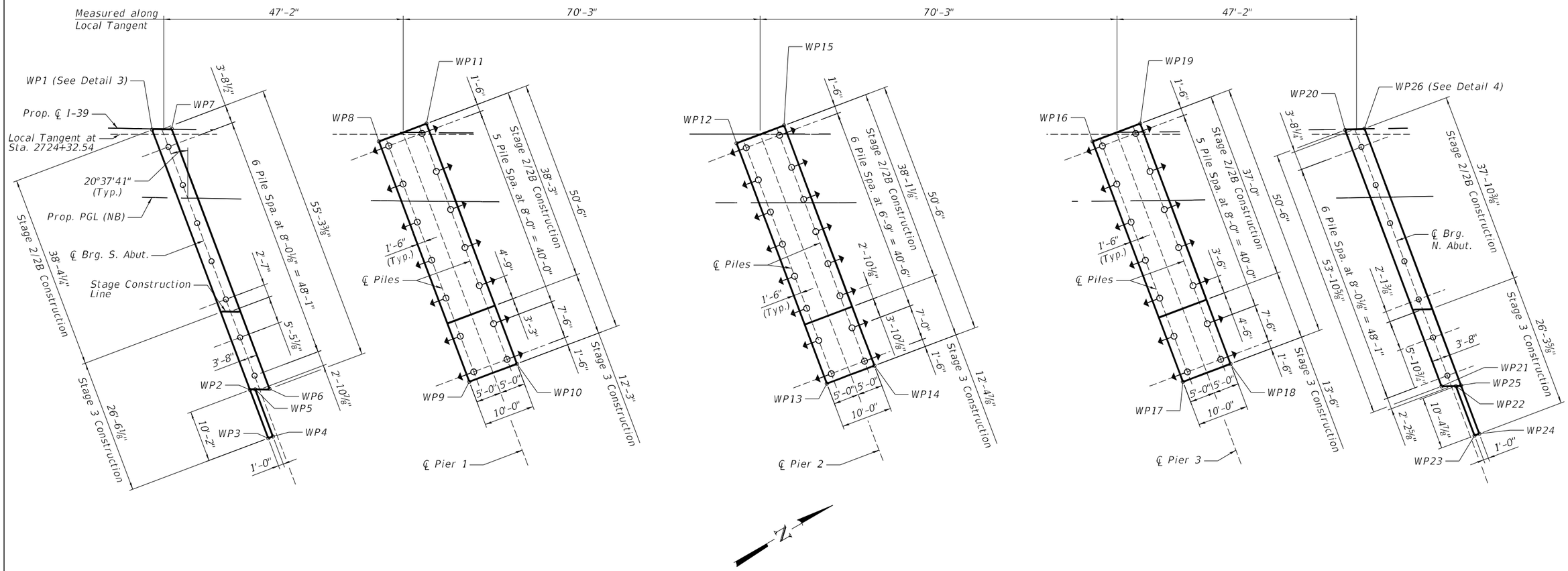

FOUNDATION LAYOUT PLAN (NORTHBOUND)

S. ABUT. WORK POINTS

W.P.	Station	Offset
1	2723+12.83	00.16 Rt.
2	2723+32.84	51.04 Rt.
3	2723+36.52	60.50 Rt.
4	2723+37.45	60.14 Rt.
5	2723+33.86	50.92 Rt.
6	2723+36.65	50.79 Rt.
7	2723+16.67	00.09 Lt.

*All Stations and Offsets Are Measured from Prop. ℄ I-39

PIER 1 WORK POINTS

W.P.	Station	Offset
8	2723+57.51	01.85 Rt.
9	2723+75.68	48.94 Rt.
10	2723+84.95	45.35 Rt.
11	2723+66.83	01.77 Lt.

*All Stations and Offsets Are Measured from Prop. ℄ I-39

PIER 2 WORK POINTS

W.P.	Station	Offset
12	2724+27.87	01.80 Rt.
13	2724+45.57	49.08 Rt.
14	2724+54.87	45.58 Rt.
15	2724+37.23	01.72 Lt.

*All Stations and Offsets Are Measured from Prop. ℄ I-39

PIER 3 WORK POINTS

W.P.	Station	Offset
16	2724+97.97	01.75 Rt.
17	2725+15.19	49.21 Rt.
18	2725+24.53	45.80 Rt.
19	2725+07.37	01.67 Lt.

*All Stations and Offsets Are Measured from Prop. ℄ I-39

N. ABUT. WORK POINTS

W.P.	Station	Offset
20	2725+47.69	00.15 Rt.
21	2725+65.70	50.92 Rt.
22	2725+68.50	50.92 Rt.
23	2725+71.94	60.72 Rt.
24	2725+72.88	60.39 Rt.
25	2725+69.52	50.81 Rt.
26	2725+51.50	00.08 Lt.

*All Stations and Offsets Are Measured from Prop. ℄ I-39

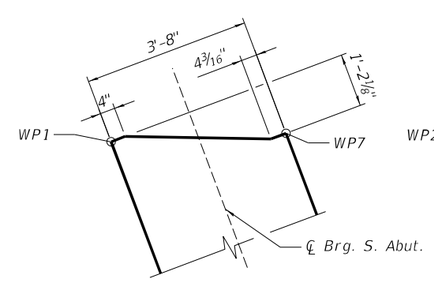

DETAIL 3

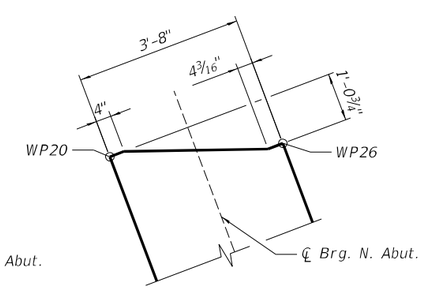

DETAIL 4

LEGEND

= Pile Battered 1H:6V

= Vertical Pile

NOTES:

1. See Sheets 63 to 72 of 81 for pier details.
2. See Sheets 56 to 62 of 81 for abutment details.
3. After demolition of the existing abutments, the Contractor shall verify that the existing back row vertical piles will not conflict with driving the proposed abutment batter piles. The Contractor shall inform the Engineer of any potential conflicts before driving piles.
4. Pile batter may be reduced for piles located directly adjacent to the stage lines where the pile leads conflict with the existing or proposed structure.
5. To miss existing piles, the pile driving tolerance relative to the plan position in Article 512.12 of the Standard Specifications may be increased to 1 ft. measured along centerline of bearing. The tolerance measured perpendicular to centerline of bearing shall remain at 6 in.

MODEL: SMODELNAMES
FILE NAME: c:\pwworkdir\benesch projects\projects\dms65240\D264C24-1010213_0214-sht-fdn-002.dgn

benesch
Alfred Benesch & Company
35 W Wacker Drive, Suite 3300
Chicago, Illinois 60601
312-565-0150 Job No. 10800

USER NAME =	DESIGNED - WKK	REVISED -	
	CHECKED - JHG	REVISED -	
PLOT SCALE =	DRAWN - KMS	REVISED -	
PLOT DATE =	CHECKED - JHG	REVISED -	

STATE OF ILLINOIS
DEPARTMENT OF TRANSPORTATION

FOUNDATION LAYOUT PLAN (NORTHBOUND)
STRUCTURE NO. 101-0213 & 101-0214

SHEET 5 OF 81 SHEETS

F.A.I. RTE.	SECTION	COUNTY	TOTAL SHEETS	SHEET NO.
39	(201-3)R & (4-1, 5)R	WINNEBAGO	1685	700

CONTRACT NO. 64C24

ILLINOIS FED. AID PROJECT

4/22/2025 12:38:43 PM