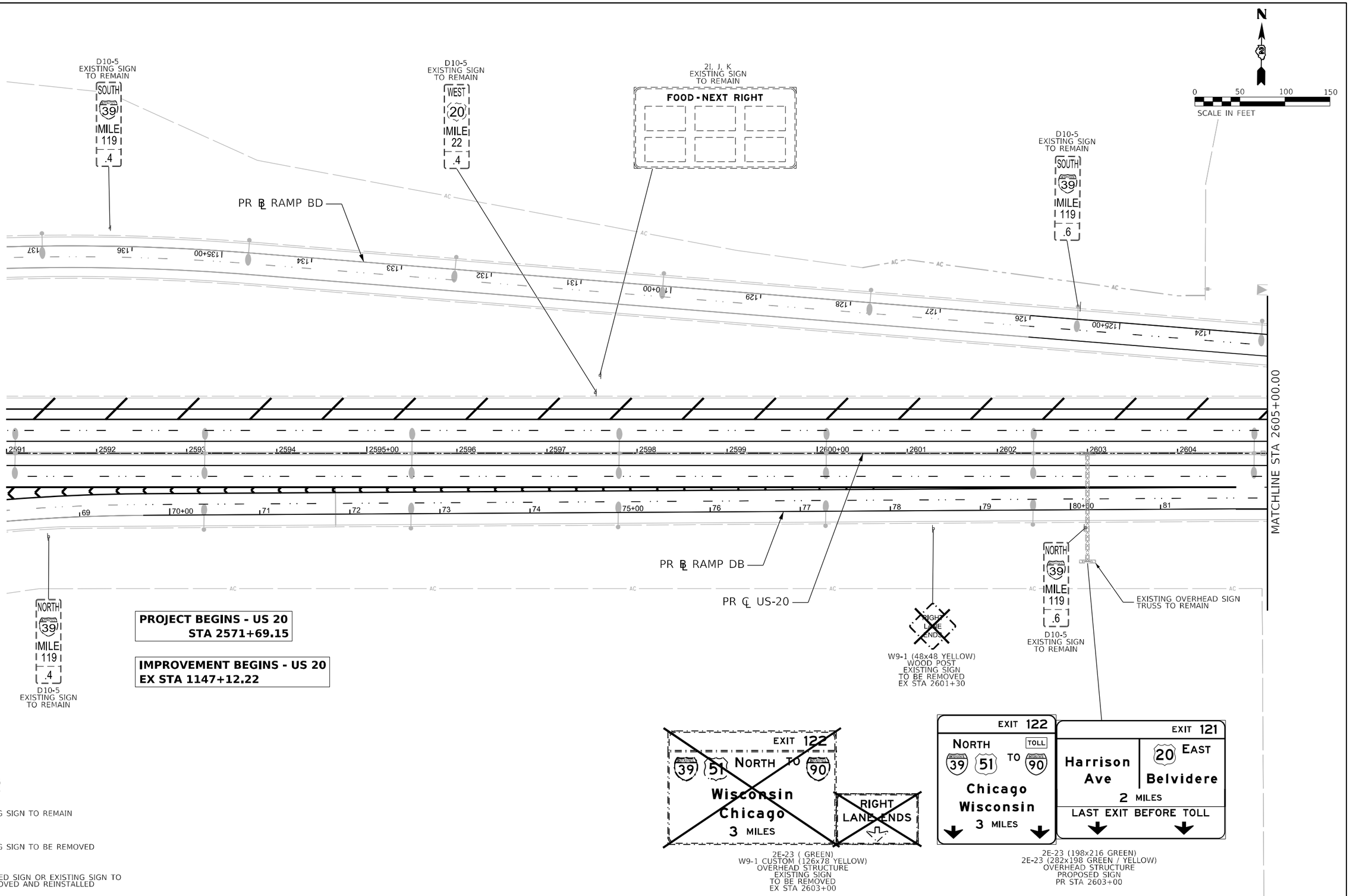

LEGEND

- SPEED LIMIT 45 — EXISTING SIGN TO REMAIN
- SPEED LIMIT 45 — EXISTING SIGN TO BE REMOVED
- SPEED LIMIT 45 — PROPOSED SIGN OR EXISTING SIGN TO BE REMOVED AND REINSTALLED

MODEL: PMK-01 [Sheet]
FILE NAME: pw://benesch-pw.bentley.com:benesch-pw-01/Documents/108009/108009.01/Eng_Docs/CAD_Sheets/Pvmk_mkg_sign/Mainline and Ramps (Quigg)/D264C24SIN-PR Signing Mainline.dgn

QUIGG ENGINEERING INC

USER NAME = mwilson	DESIGNED - MW	REVISED -	
	DRAWN - MW	REVISED -	
PLOT SCALE = 0.16666633 ' / in.	CHECKED - FBN	REVISED -	
PLOT DATE = 2/11/2025	DATE - 02/14/2025	REVISED -	

STATE OF ILLINOIS
DEPARTMENT OF TRANSPORTATION

PROPOSED SIGNING
I-39 / US 20

SCALE: 1"=50' | SHEET 1 OF 28 SHEETS | STA. BEGIN STATION TO STA. 2605+00.00

F.A.I. RTE.	SECTION	COUNTY	TOTAL SHEETS	SHEET NO.
39	(201-3)R & (4-1.5)R	WINNEBAGO	1685	401

CONTRACT NO. 64C24

ILLINOIS | FED. AID PROJECT

* FAI ROUTE 39 (I-39) & FAP 301 (US 20)

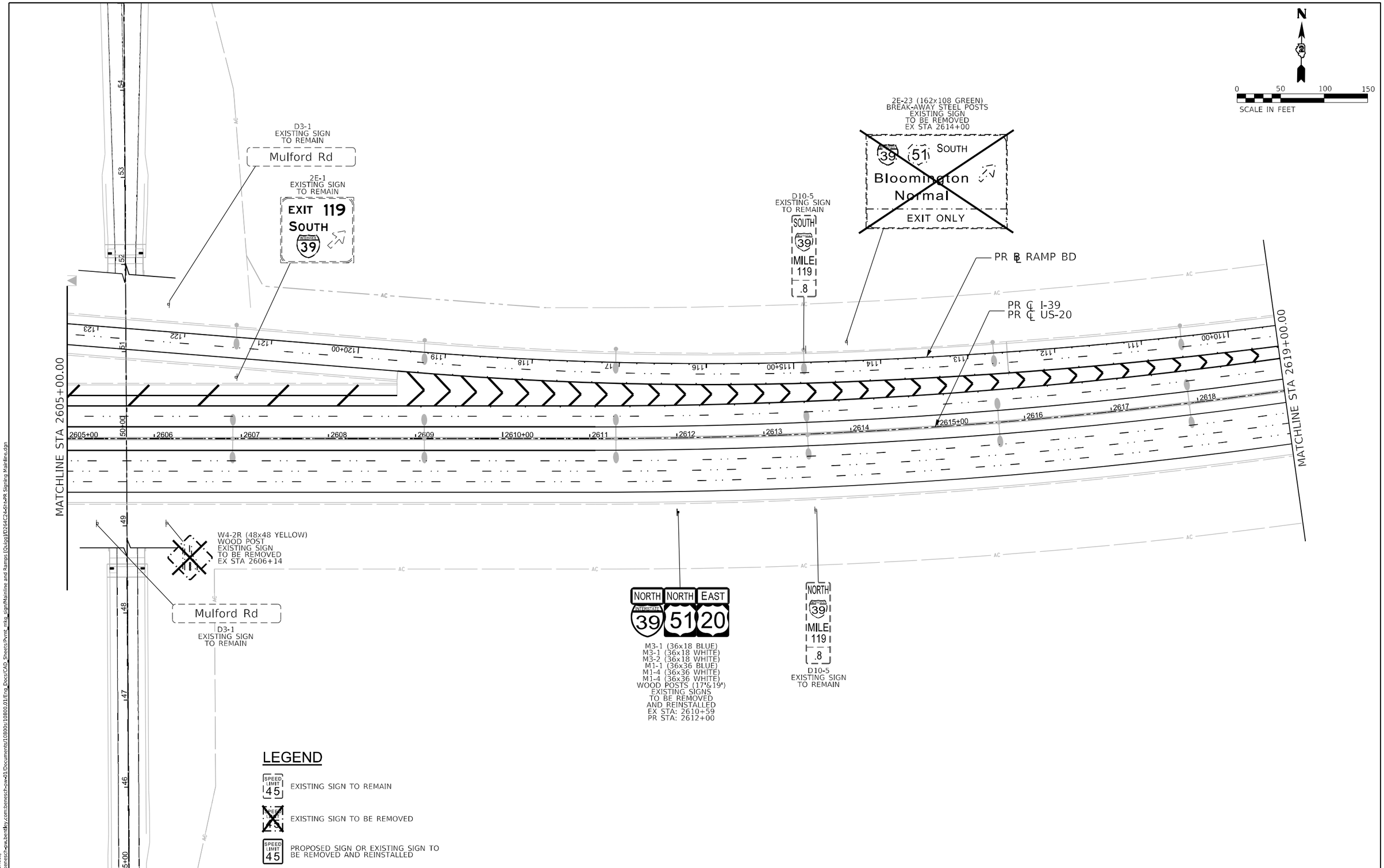

MODEL: PMK-02 [Sheet]
FILE NAME: pw://benesch-pw.bentley.com:benesch-pw-01/Documents/108009.108600.01/Eng_Docs/CAD_Sheets/Pvmt_mrks_sign/Mainline and Ramps [Quigg]/D254C24-SH-PR Signing Mainline.dgn

QUIGG ENGINEERING INC

USER NAME = mwilson	DESIGNED - MW	REVISED -	
	DRAWN - MW	REVISED -	
PLOT SCALE = 0.16666633 ' / in.	CHECKED - FBN	REVISED -	
PLOT DATE = 2/11/2025	DATE - 02/14/2025	REVISED -	

STATE OF ILLINOIS
DEPARTMENT OF TRANSPORTATION

PROPOSED SIGNING
I-39 / US 20

SCALE: 1"=50' | SHEET 2 OF 28 SHEETS | STA. 2605+00.00 TO STA. 2619+00.00

F.A.I. RTE.	SECTION	COUNTY	TOTAL SHEETS	SHEET NO.
39	(201-3)R & (4-1.5)R	WINNEBAGO	1685	402

CONTRACT NO. 64C24

ILLINOIS | FED. AID PROJECT

* FAI ROUTE 39 (I-39) & FAP 301 (US 20)

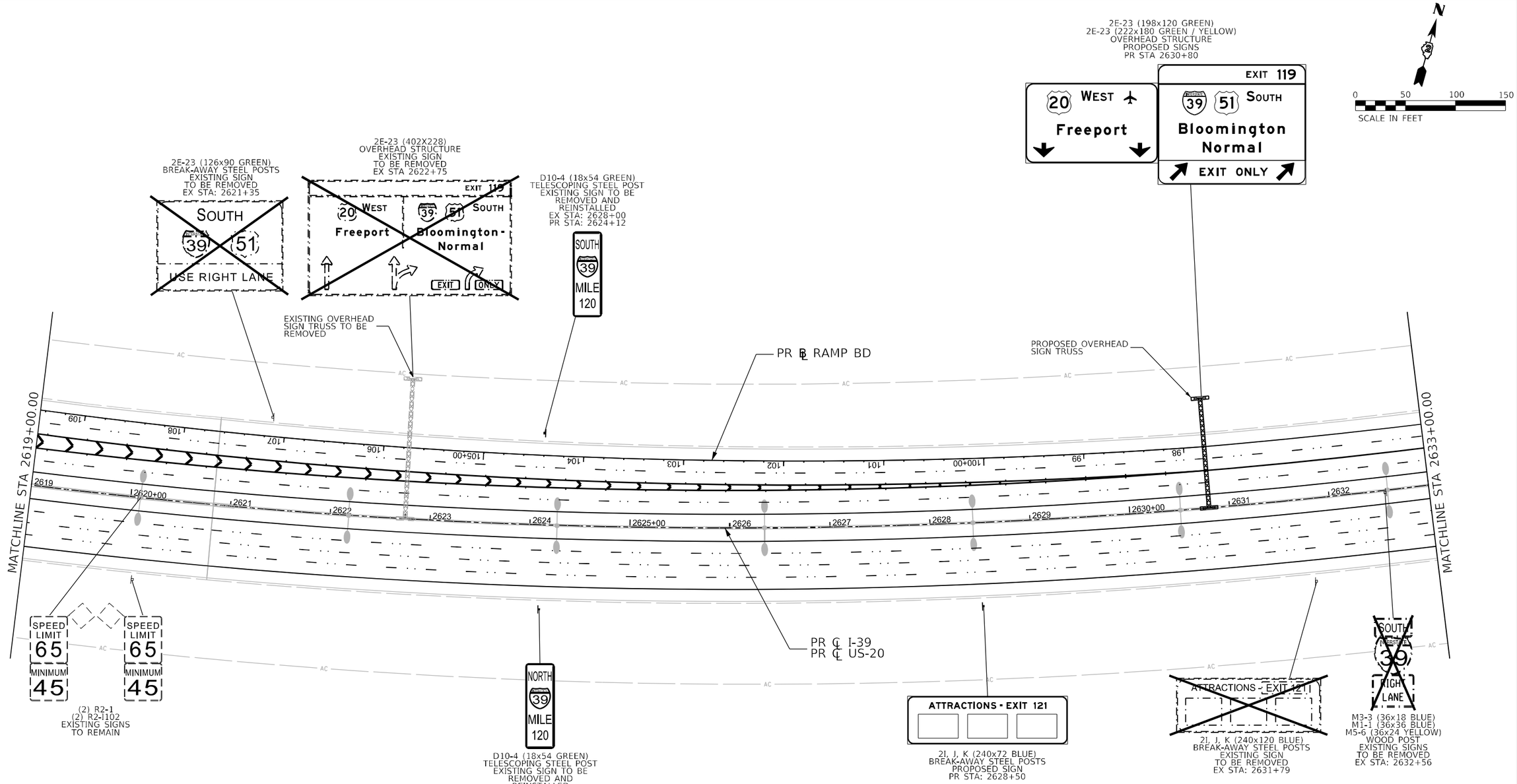

LEGEND

- SPEED LIMIT 45 — EXISTING SIGN TO REMAIN
- SPEED LIMIT 45 — EXISTING SIGN TO BE REMOVED
- SPEED LIMIT 45 — PROPOSED SIGN OR EXISTING SIGN TO BE REMOVED AND REINSTALLED

MODEL: PMK-03 [Sheet]
FILE NAME: pw://benesch-pw.bentley.com:benesch-pw-01/Documents/10800s/10800.01/Eng_Docs/CAD_Sheets/Pvmt_mtkg_sign/Mainline and Ramps (Quigg)/D264C24-SHs-PR Signing Mainline.dgn

QUIGG ENGINEERING INC

USER NAME = mwilson	DESIGNED - MW	REVISED -	
	DRAWN - MW	REVISED -	
PLOT SCALE = 0.16666633 ' / in.	CHECKED - FBN	REVISED -	
PLOT DATE = 2/11/2025	DATE - 02/14/2025	REVISED -	

STATE OF ILLINOIS
DEPARTMENT OF TRANSPORTATION

PROPOSED SIGNING
I-39 / US 20

SCALE: 1"=50' | SHEET 3 OF 28 SHEETS | STA. 2619+00.00 TO STA. 2633+00.00

F.A.I. RTE.	SECTION	COUNTY	TOTAL SHEETS	SHEET NO.
39	(201-3)R & (4-1.5)R	WINNEBAGO	1685	403
		CONTRACT NO. 64C24		
		ILLINOIS	FED. AID PROJECT	

* FAI ROUTE 39 (I-39) & FAP 301 (US 20)

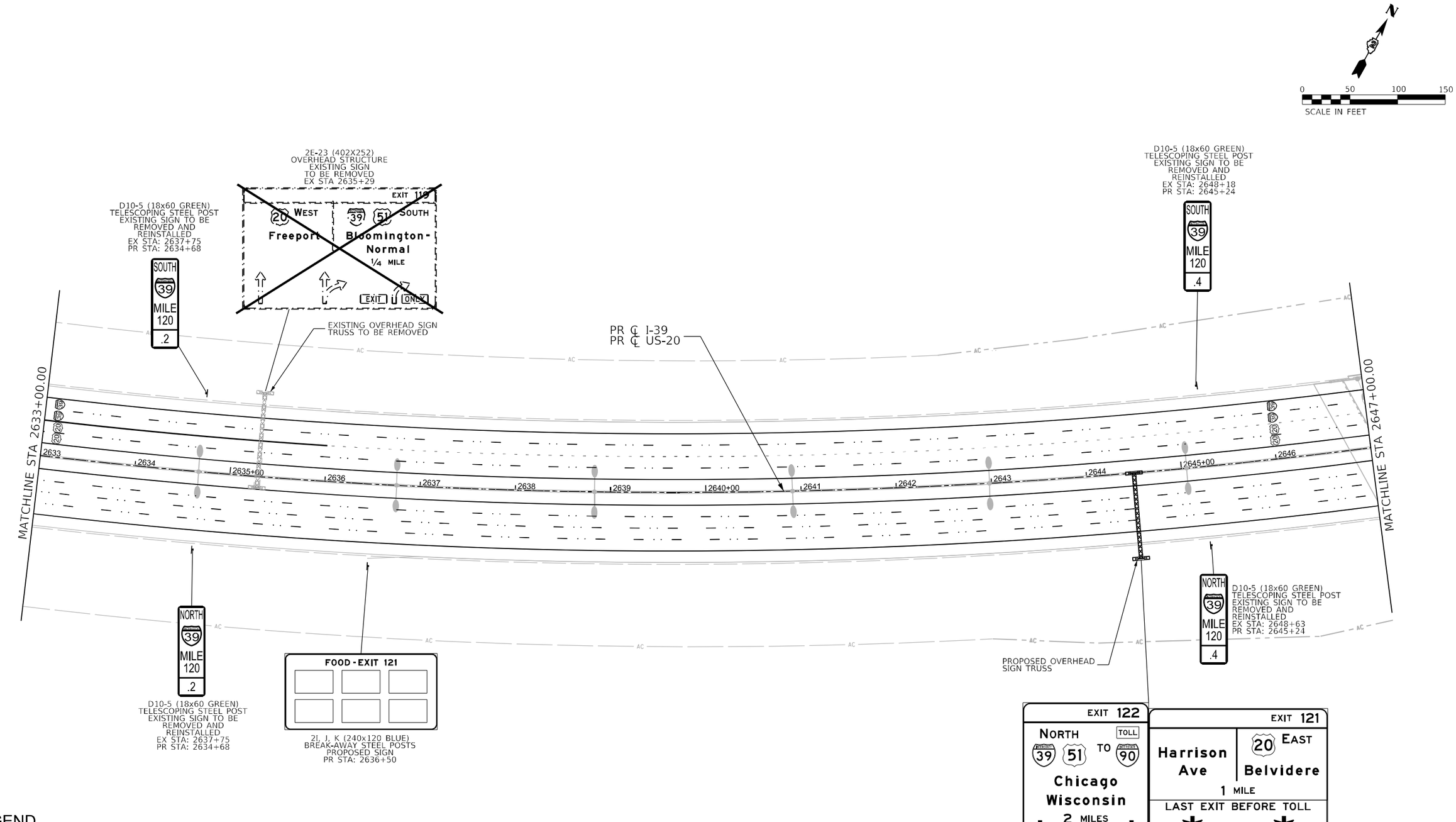

LEGEND

SPEED LIMIT 45 — EXISTING SIGN TO REMAIN

SPEED LIMIT 45 — EXISTING SIGN TO BE REMOVED

SPEED LIMIT 45 — PROPOSED SIGN OR EXISTING SIGN TO BE REMOVED AND REINSTALLED

MODEL: PMK-04 [Sheet]
FILE NAME: pw://benesch-pw.bentley.com:benesch-pw-01/Documents/10800's/10800.01/Eng_Docs/CAD_Sheets/Pmk_mlsg_sign/Mainline and Ramps [Quigg]/D264C24-SH-PR Signing Mainline.dgn

QUIGG ENGINEERING INC

USER NAME = mwilson	DESIGNED - MW	REVISED -	
	DRAWN - MW	REVISED -	
PLOT SCALE = 0.16666633 ' / in.	CHECKED - FBN	REVISED -	
PLOT DATE = 2/11/2025	DATE - 02/14/2025	REVISED -	

STATE OF ILLINOIS
DEPARTMENT OF TRANSPORTATION

PROPOSED SIGNING
I-39 / US 20

SCALE: 1"=50' | SHEET 4 OF 28 SHEETS | STA. 2633+00.00 TO STA. 2647+00.00

F.A.I. RTE.	SECTION	COUNTY	TOTAL SHEETS	SHEET NO.
39	(201-3)R & (4-1,5)R	WINNEBAGO	1685	404
		CONTRACT NO. 64C24		
		ILLINOIS	FED. AID PROJECT	

* FAI ROUTE 39 (I-39) & FAP 301 (US 20)

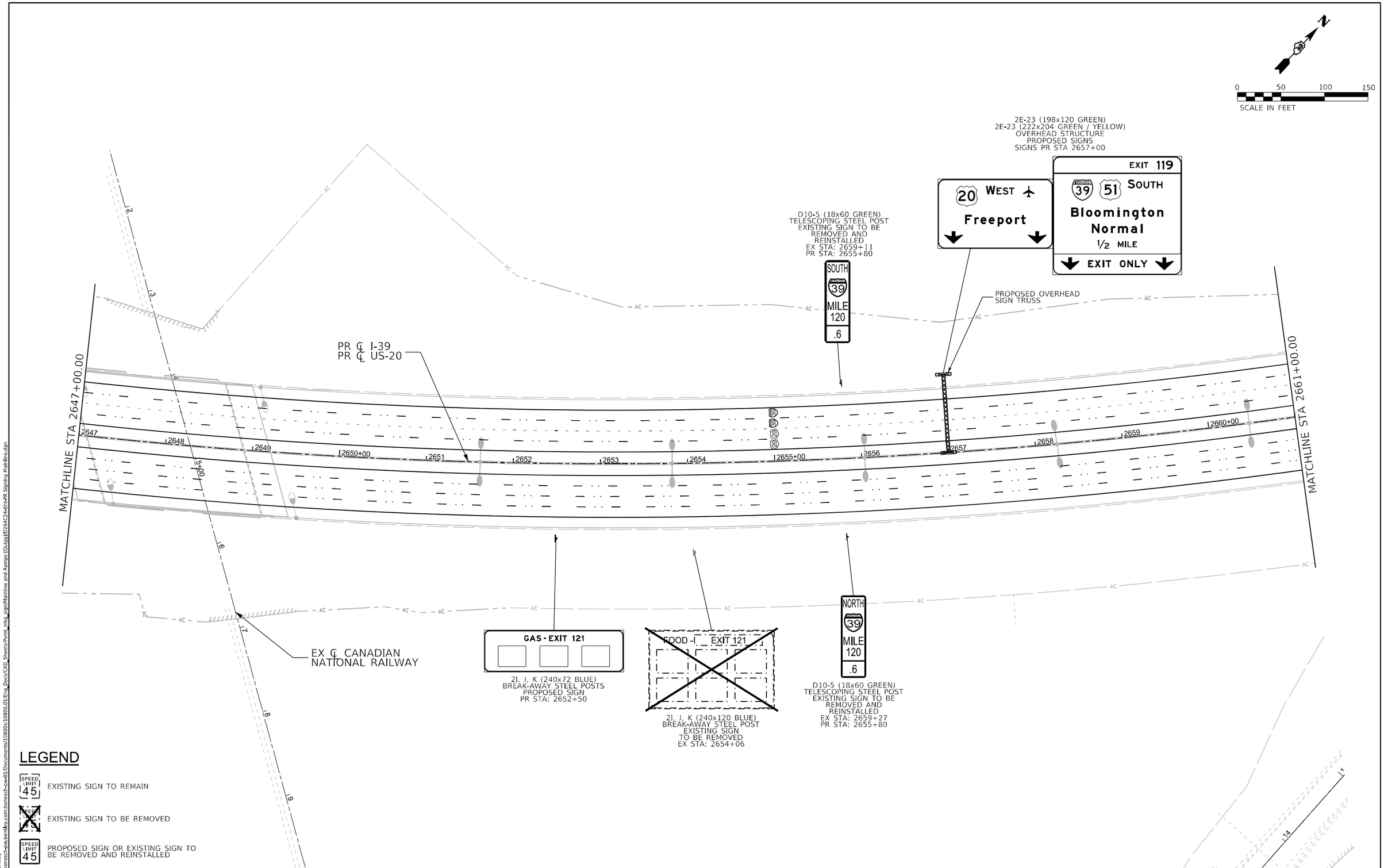

LEGEND

SPEED LIMIT 45 — EXISTING SIGN TO REMAIN

SPEED LIMIT 45 — EXISTING SIGN TO BE REMOVED

SPEED LIMIT 45 — PROPOSED SIGN OR EXISTING SIGN TO BE REMOVED AND REINSTALLED

MODEL: PMK-05 [Sheet]
FILE NAME: pw://benesch-pw.bentley.com:benesch-pw-01/Documents/108009.108600.01/Eng_Docs/CAD_Sheets/Pvmt_mrks_sign/Mainline and Ramps [Quigg]/D254C24-SH-PR Signing Mainline.dgn

QUIGG ENGINEERING INC

USER NAME = mwilson	DESIGNED - MW	REVISED -	
	DRAWN - MW	REVISED -	
PLOT SCALE = 0.16666633 ' / in.	CHECKED - FBN	REVISED -	
PLOT DATE = 2/11/2025	DATE - 02/14/2025	REVISED -	

STATE OF ILLINOIS
DEPARTMENT OF TRANSPORTATION

PROPOSED SIGNING
I-39 / US 20

SCALE: 1"=50' | SHEET 5 OF 28 SHEETS | STA. 2647+00.00 TO STA. 2661+00.00

F.A.I. RTE.	SECTION	COUNTY	TOTAL SHEETS	SHEET NO.
39	(201-3)R & (4-1.5)R	WINNEBAGO	1685	405
		CONTRACT NO. 64C24		
		ILLINOIS	FED. AID PROJECT	

* FAI ROUTE 39 (I-39) & FAP 301 (US 20)

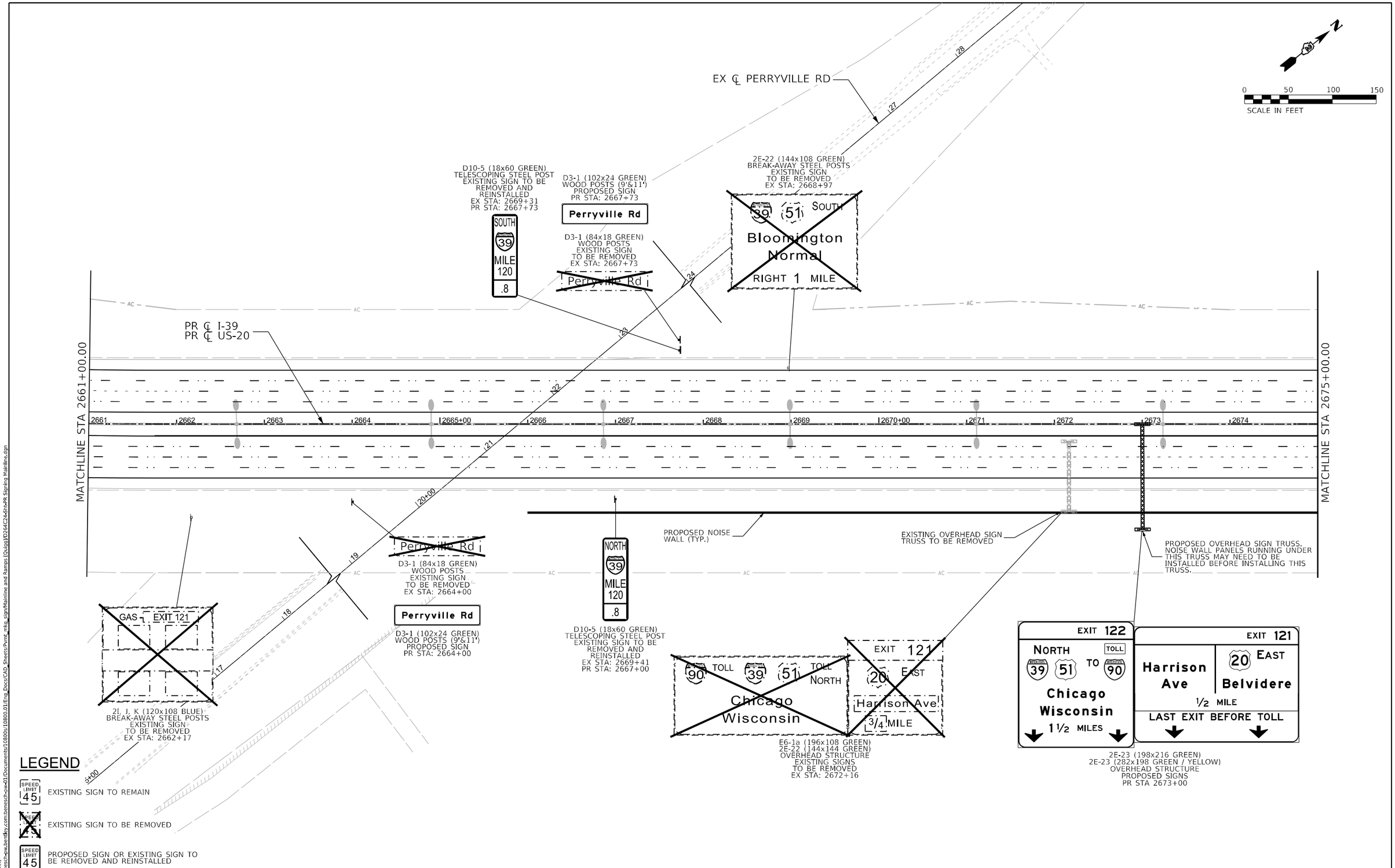

MODEL: PMK-06 [Sheet]
FILE NAME: pw://beresch-pw.bentley.com:beresch-pw-01\Documents\108090\10800.01\Eng_Docs\CAD_Sheets\Pvmt_mrks_sign\Mainline and Ramps [Quigg]\D264C24-Sh-PR Signing Mainline.dgn

QUIGG ENGINEERING INC

USER NAME = mwilson	DESIGNED - MW	REVISED -	
	DRAWN - MW	REVISED -	
PLOT SCALE = 0.16666633 ' / in.	CHECKED - FBN	REVISED -	
PLOT DATE = 2/11/2025	DATE - 02/14/2025	REVISED -	

STATE OF ILLINOIS
DEPARTMENT OF TRANSPORTATION

PROPOSED SIGNING
I-39 / US 20

SCALE: 1"=50' | SHEET 6 OF 28 SHEETS | STA. 2661+00.00 TO STA. 2675+00.00

F.A.I. RTE.	SECTION	COUNTY	TOTAL SHEETS	SHEET NO.
39	(201-3)R & (4-1.5)R	WINNEBAGO	1685	406
		CONTRACT NO. 64C24		
	ILLINOIS	FED. AID PROJECT		

* FAI ROUTE 39 (I-39) & FAP 301 (US 20)

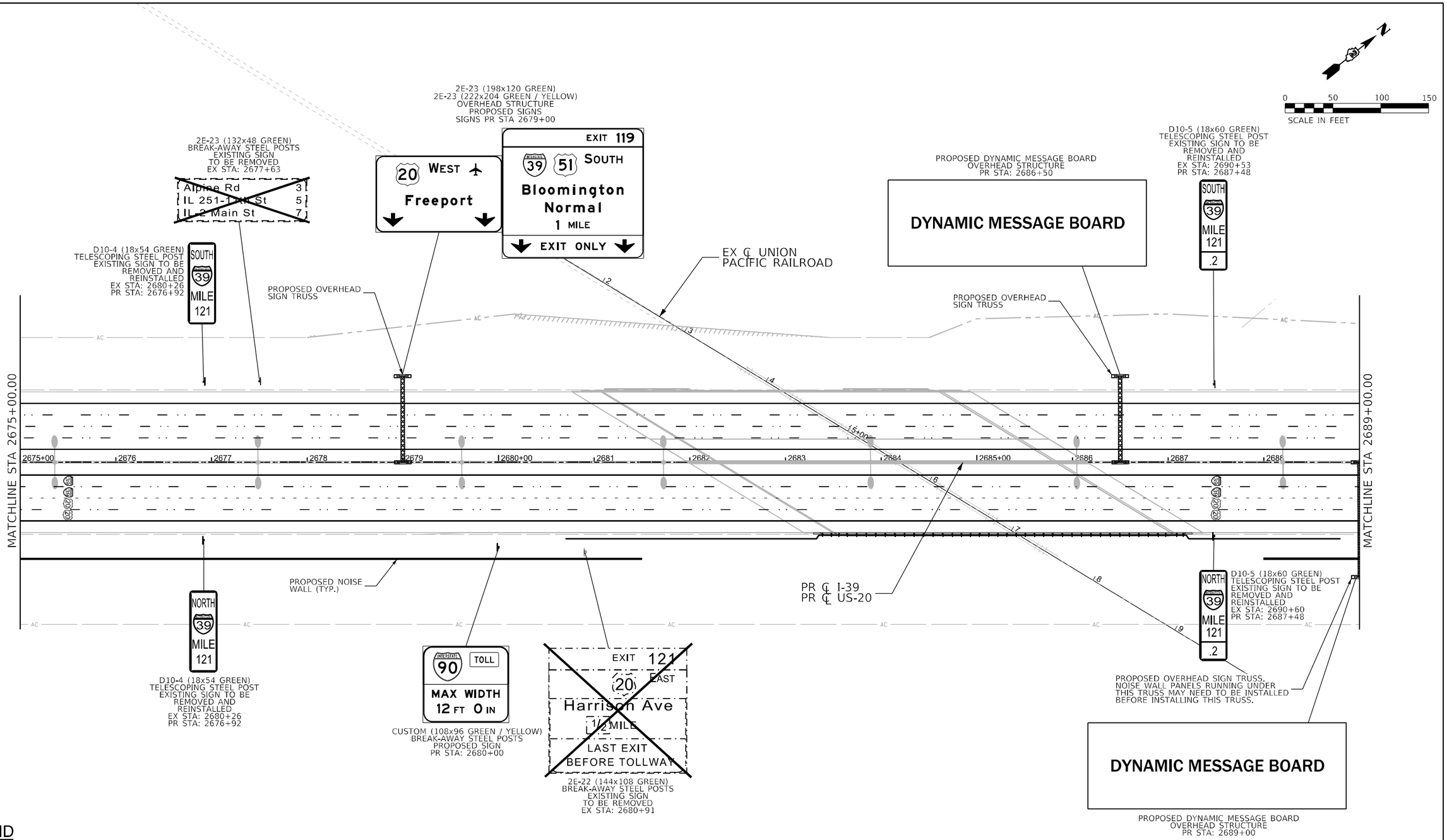

LEGEND

SPEED LIMIT 45 — EXISTING SIGN TO REMAIN

SPEED LIMIT 45 — EXISTING SIGN TO BE REMOVED

SPEED LIMIT 45 — PROPOSED SIGN OR EXISTING SIGN TO BE REMOVED AND REINSTALLED

MODEL: PMK-07 [Sheet]
FILE NAME: pw://benesch-pw.bentley.com:benesch-pw-01/Documents/108909.108000.01/Eng_Docs/CAD_Sheets/Pvmt_mkg_sign/Mainline and Ramps [Quigg]/D264C24-Sht-PR Signing Mainline.dgn

QUIGG ENGINEERING INC

USER NAME = mwilson	DESIGNED - MW	REVISED -	
	DRAWN - MW	REVISED -	
PLOT SCALE = 0.16666633 ' / in.	CHECKED - FBN	REVISED -	
PLOT DATE = 2/11/2025	DATE - 02/14/2025	REVISED -	

STATE OF ILLINOIS
DEPARTMENT OF TRANSPORTATION

PROPOSED SIGNING
I-39 / US 20

SCALE: 1"=50' | SHEET 7 OF 28 SHEETS | STA. 2675+00.00 TO STA. 2689+00.00

F.A.I. RTE.	SECTION	COUNTY	TOTAL SHEETS	SHEET NO.
39	(201-3)R & (4-1.5)R	WINNEBAGO	1685	407
		CONTRACT NO. 64C24		
		ILLINOIS	FED. AID PROJECT	

* FAI ROUTE 39 (I-39) & FAP 301 (US 20)

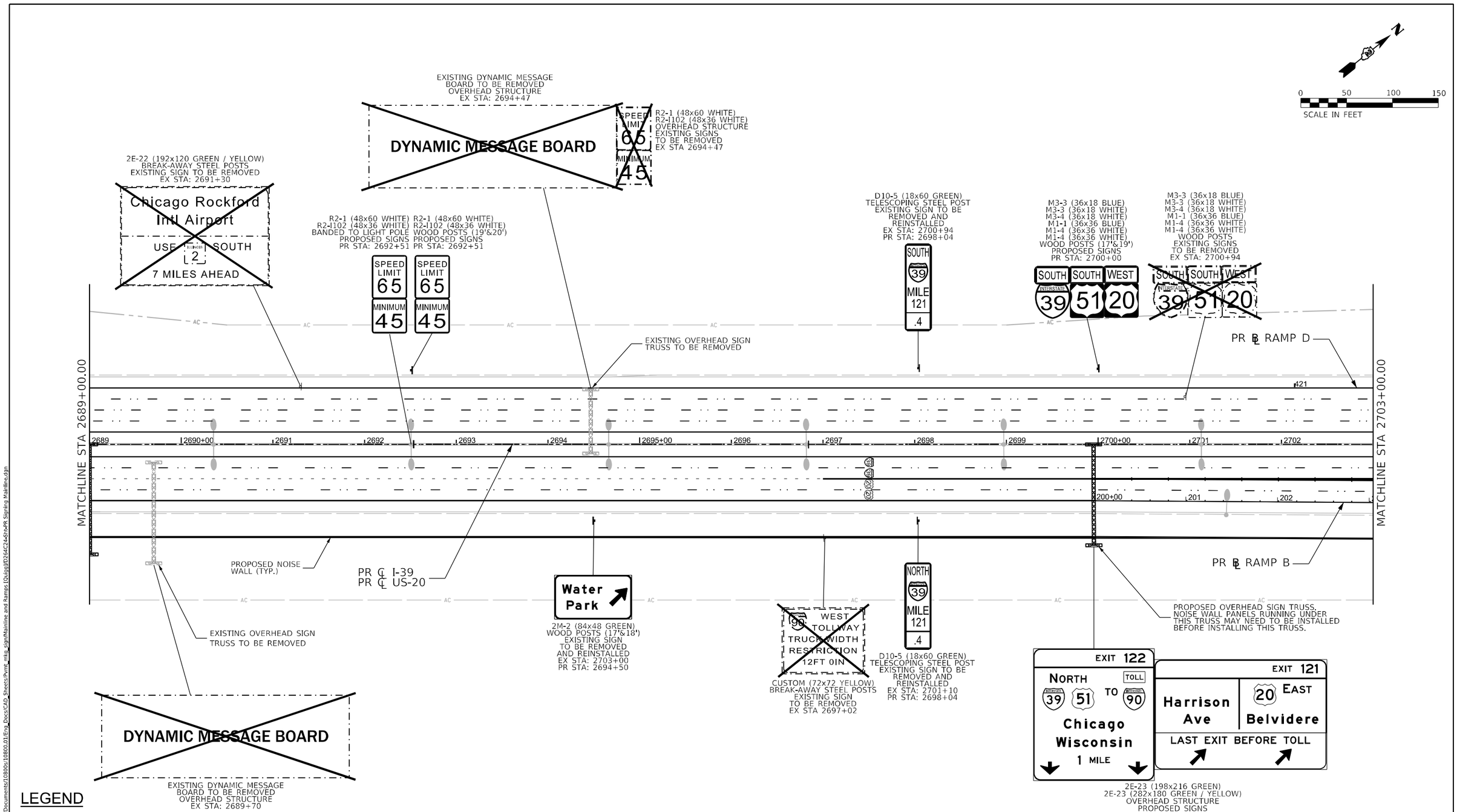

LEGEND

- SPEED LIMIT 45 — EXISTING SIGN TO REMAIN
- ~~SPEED LIMIT 45~~ — EXISTING SIGN TO BE REMOVED
- SPEED LIMIT 45 — PROPOSED SIGN OR EXISTING SIGN TO BE REMOVED AND REINSTALLED

MODEL: PMK-08 [Sheet]
FILE NAME: pw://benesch-pw.bentley.com:benesch-pw-01/Documents/10800s/10800.01/Eng_Docs/CAD_Sheets/Pvmt_mkg_sign/Mainline and Ramps [QuiggJD]254C24-Sht-PR Signing Mainline.dgn

QUIGG ENGINEERING INC

USER NAME = mwilson	DESIGNED - MW	REVISED -	
	DRAWN - MW	REVISED -	
PLOT SCALE = 0.16666633 ' / in.	CHECKED - FBN	REVISED -	
PLOT DATE = 2/11/2025	DATE - 02/14/2025	REVISED -	

STATE OF ILLINOIS
DEPARTMENT OF TRANSPORTATION

PROPOSED SIGNING
I-39 / US 20

SCALE: 1"=50' | SHEET 8 OF 28 SHEETS | STA. 2689+00.00 TO STA. 2703+00.00

F.A.I. RTE.	SECTION	COUNTY	TOTAL SHEETS	SHEET NO.
39	(201-3)R & (4-1.5)R	WINNEBAGO	1685	408
		CONTRACT NO. 64C24		
		ILLINOIS	FED. AID PROJECT	

* FAI ROUTE 39 (I-39) & FAP 301 (US 20)

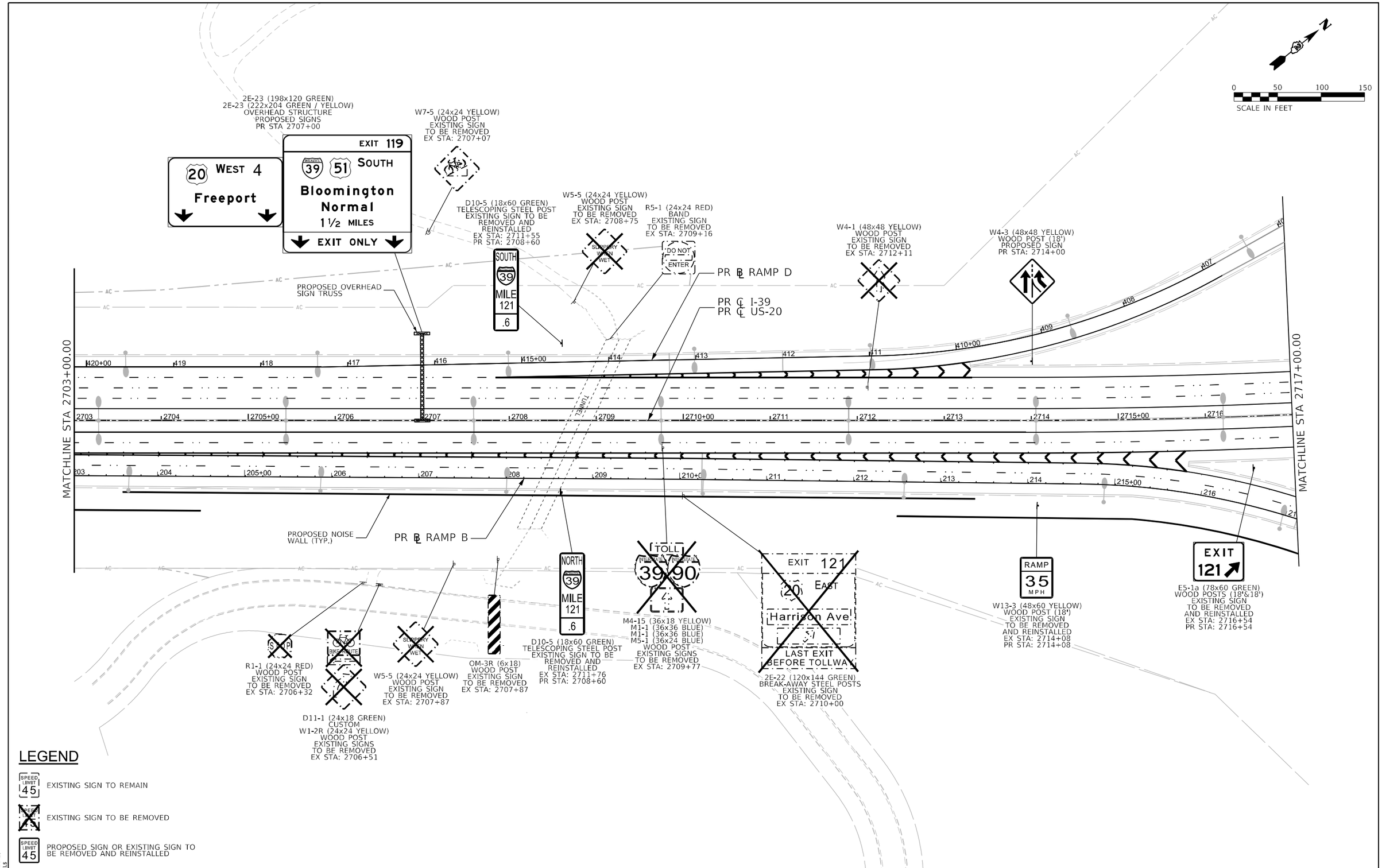

MODEL: $MODELNAME$
FILE NAME: $FILE$

QUIGG ENGINEERING INC

USER NAME = $USER$	DESIGNED - MW	REVISED -	
	DRAWN - MW	REVISED -	
PLOT SCALE = $SCALE$	CHECKED - FBN	REVISED -	
PLOT DATE = $DATE$	DATE - 02/14/2025	REVISED -	

STATE OF ILLINOIS
DEPARTMENT OF TRANSPORTATION

PROPOSED SIGNING
I-39 / US 20

SCALE: 1"=50' | SHEET 9 OF 28 SHEETS | STA. 2703+00.00 TO STA. 2717+00.00

F.A.I. RTE.	SECTION	COUNTY	TOTAL SHEETS	SHEET NO.
39	(201-3)R & (4-1.5)R	WINNEBAGO	1685	409

CONTRACT NO. 64C24

ILLINOIS | FED. AID PROJECT

* FAI ROUTE 39 (I-39) & FAP 301 (US 20)

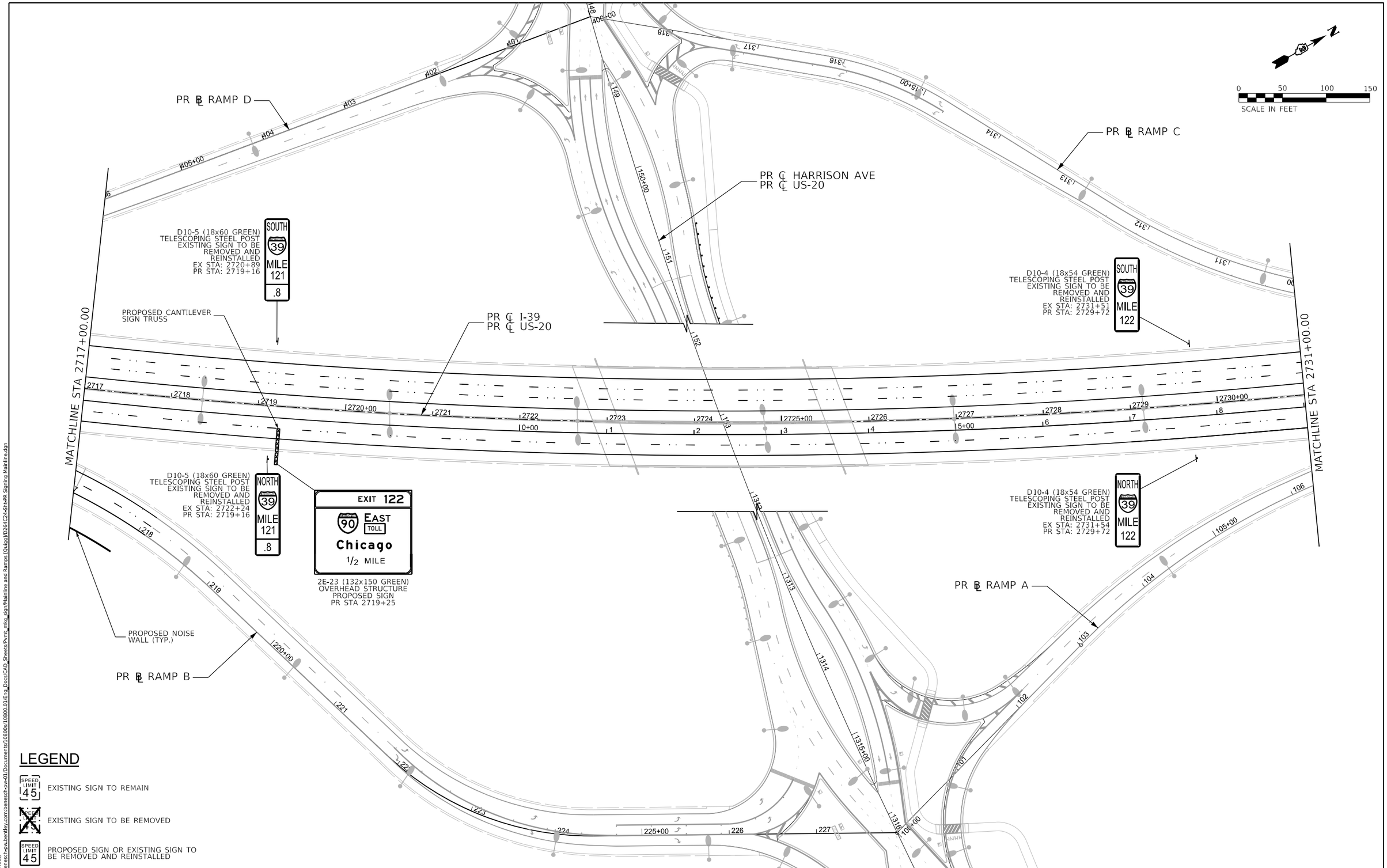

MODEL: PMK-10 [Sheet]
FILE NAME: pw://bentleyc-pw.bentley.com:bentleyc-iw-01/Documents/10800s/10800.01/Eng_Docs/CAD_Sheets/Pvmt_mrks_sign/Mainline and Ramps [Quigg]/D264C24-Sh-PR Signing Mainline.dgn

QUIGG ENGINEERING INC

USER NAME = mwilson	DESIGNED - MW	REVISED -	
	DRAWN - MW	REVISED -	
PLOT SCALE = 0.16666633 ' / in.	CHECKED - FBN	REVISED -	
PLOT DATE = 2/11/2025	DATE - 02/14/2025	REVISED -	

STATE OF ILLINOIS
DEPARTMENT OF TRANSPORTATION

PROPOSED SIGNING
I-39 / US 20

SCALE: 1"=50' | SHEET 10 OF 28 SHEETS | STA. 2717+00.00 TO STA. 2731+50.00

F.A.I. RTE.	SECTION	COUNTY	TOTAL SHEETS	SHEET NO.
39	(201-3)R & (4-1.5)R	WINNEBAGO	1685	410
		CONTRACT NO. 64C24		
	ILLINOIS	FED. AID PROJECT		

* FAI ROUTE 39 (I-39) & FAP 301 (US 20)

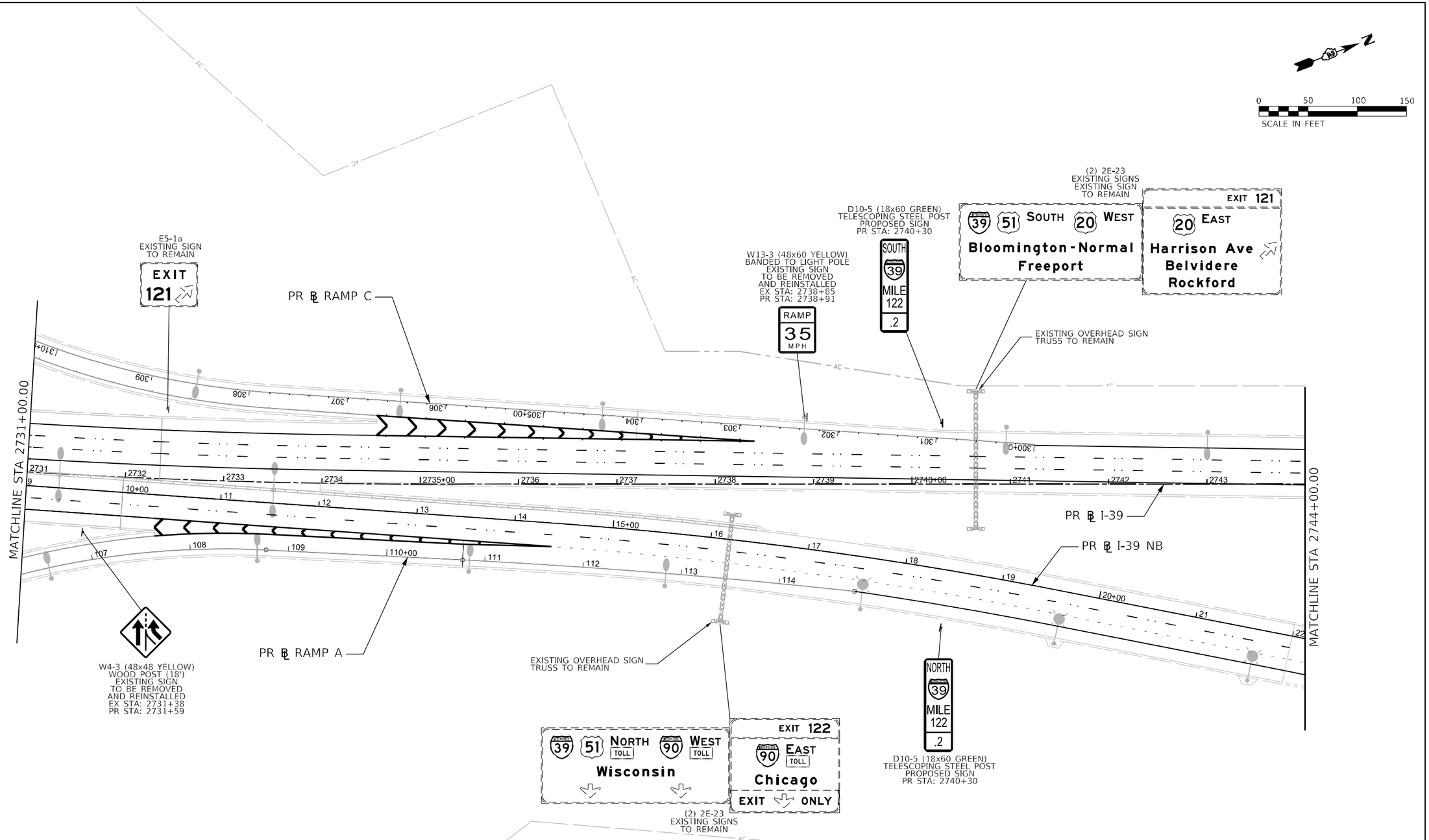

LEGEND

- SPEED LIMIT 45 — EXISTING SIGN TO REMAIN
- SPEED LIMIT 45 — EXISTING SIGN TO BE REMOVED
- SPEED LIMIT 45 — PROPOSED SIGN OR EXISTING SIGN TO BE REMOVED AND REINSTALLED

MODEL: PMK-11 [Sheet]
FILE NAME: pw://bensch-pw.bentley.com:bensch-pw-01/Documents/10800s/10800.01/Eng_Docs/CAD_Sheets/Pvmt_mtg_sign/Mainline and Ramps (Quigg)/D2624C24-Sht-PR Signing Mainline.dgn

QUIGG ENGINEERING INC

USER NAME = mwilson	DESIGNED - MW	REVISED -	
	DRAWN - MW	REVISED -	
PLOT SCALE = 0.16666633 ' / in.	CHECKED - FBN	REVISED -	
PLOT DATE = 2/11/2025	DATE - 02/14/2025	REVISED -	

STATE OF ILLINOIS
DEPARTMENT OF TRANSPORTATION

PROPOSED SIGNING
I-39

SCALE: 1"=50' | SHEET 11 OF 28 SHEETS | STA. 2731+50.00 TO STA. 2744+00.00

F.A.I. RTE.	SECTION	COUNTY	TOTAL SHEETS	SHEET NO.
39	(201-3)R & (4-1.5)R	WINNEBAGO	1685	411
		CONTRACT NO. 64C24		
		ILLINOIS	FED. AID PROJECT	

* FAI ROUTE 39 (I-39) & FAP 301 (US 20)

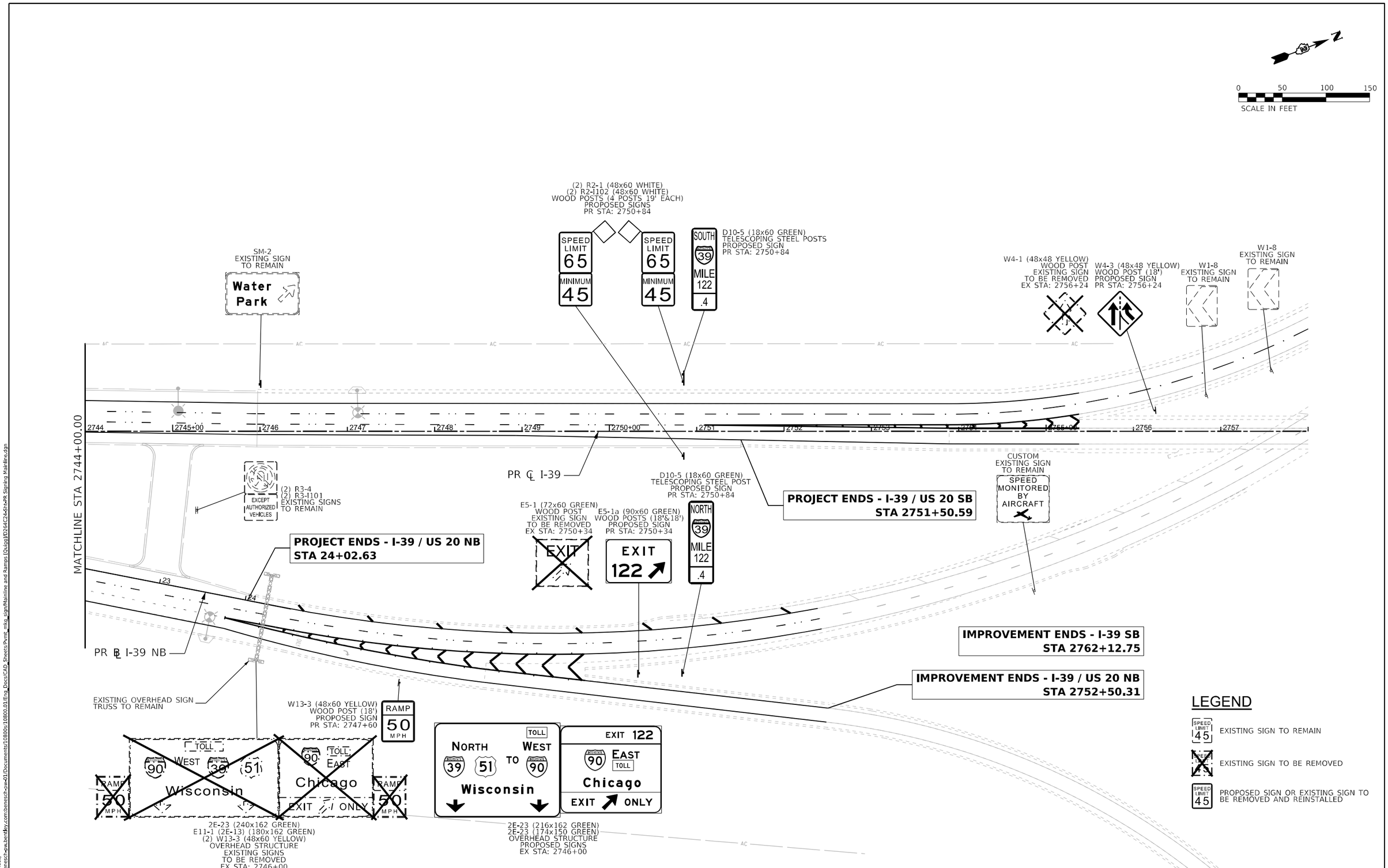

MODEL: PMK-12 [Sheet]
FILE NAME: pw://benesch-pw-01.bentley.com:benesch-pw-01/Documents/108000-108000.01/Eng_Docs/CAD_Sheets/Pvmk_mtkg_sign/Mainline and Ramps (Quigg)/D264C24-Sht-PR Signing Mainline.dgn

QUIGG ENGINEERING INC

USER NAME = mwilson	DESIGNED - MW	REVISED -	
	DRAWN - MW	REVISED -	
PLOT SCALE = 0.16666633 ' / in.	CHECKED - FBN	REVISED -	
PLOT DATE = 2/11/2025	DATE - 02/14/2025	REVISED -	

STATE OF ILLINOIS
DEPARTMENT OF TRANSPORTATION

PROPOSED SIGNING
I-39

SCALE: 1"=50' | SHEET 12 OF 28 SHEETS | STA. 2744+00.00 TO STA. END STATION

F.A.I. RTE.	SECTION	COUNTY	TOTAL SHEETS	SHEET NO.
39	(201-3)R & (4-1.5)R	WINNEBAGO	1685	412
		CONTRACT NO. 64C24		
	ILLINOIS	FED. AID PROJECT		

* FAI ROUTE 39 (I-39) & FAP 301 (US 20)

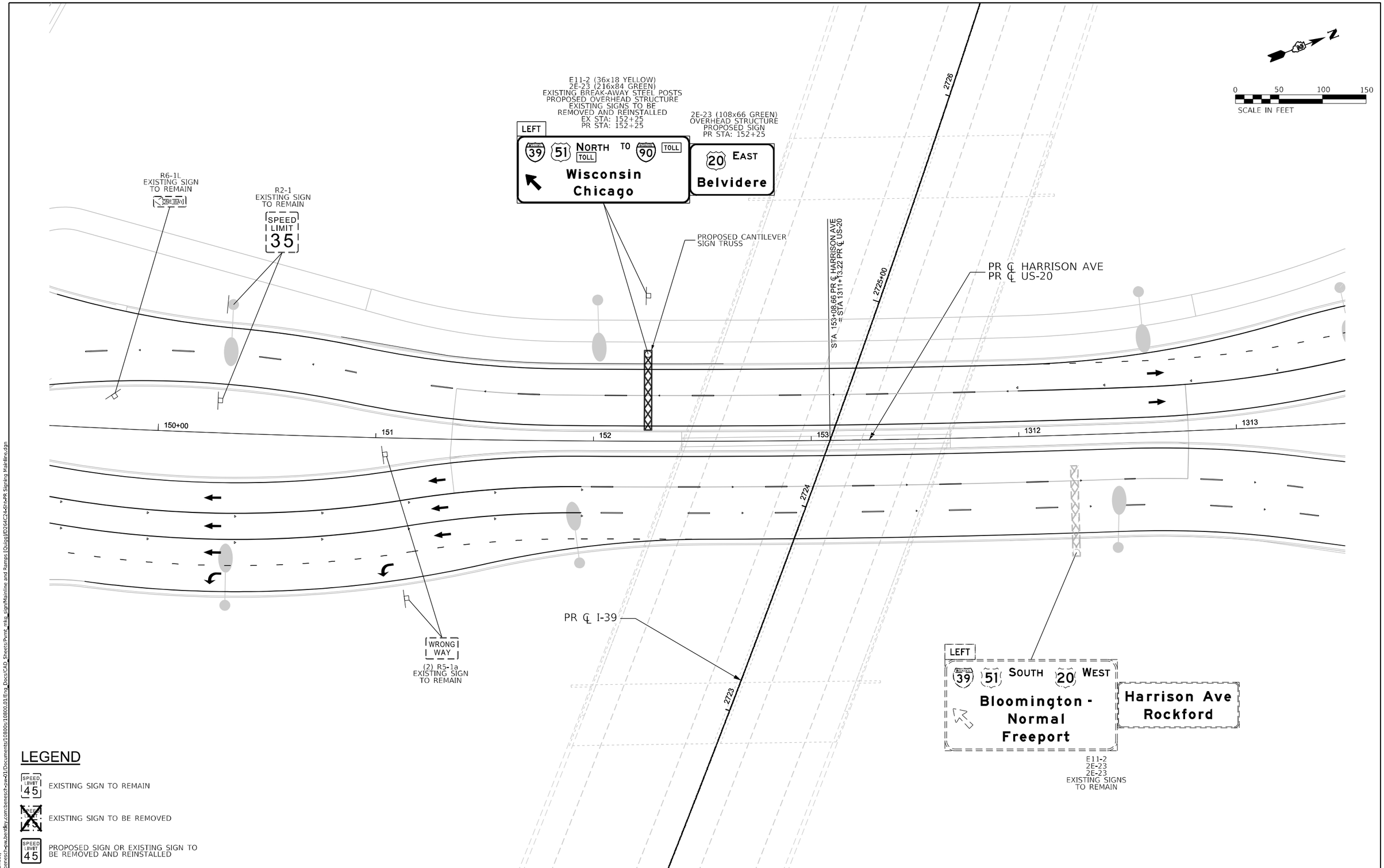

MODEL: PMK-13 [Sheet]
FILE NAME: pw://benesch-pw.bentley.com:benesch-pw-01/Documents/10800-10800.01/Eng_Docs/CAD_Sheets/Pvmt_mkg_sign/Mainline and Ramps [Quigg]D254C24-5thPR Signing Mainline.dgn

QUIGG ENGINEERING INC

USER NAME = mwilson	DESIGNED - MW	REVISED -	
	DRAWN - MW	REVISED -	
PLOT SCALE = 0.16666633 ' / in.	CHECKED - FBN	REVISED -	
PLOT DATE = 2/11/2025	DATE - 02/14/2025	REVISED -	

STATE OF ILLINOIS
DEPARTMENT OF TRANSPORTATION

PROPOSED SIGNING
HARRISON AVE / US 20

SCALE: 1"=20' | SHEET 13 OF 28 SHEETS | STA. 149+50.00 TO STA. 1313+50.00

F.A.I. RTE.	SECTION	COUNTY	TOTAL SHEETS	SHEET NO.
39	(201-3)R & (4-1.5)R	WINNEBAGO	1685	413
		CONTRACT NO. 64C24		
		ILLINOIS	FED. AID PROJECT	

* FAI ROUTE 39 (I-39) & FAP 301 (US 20)

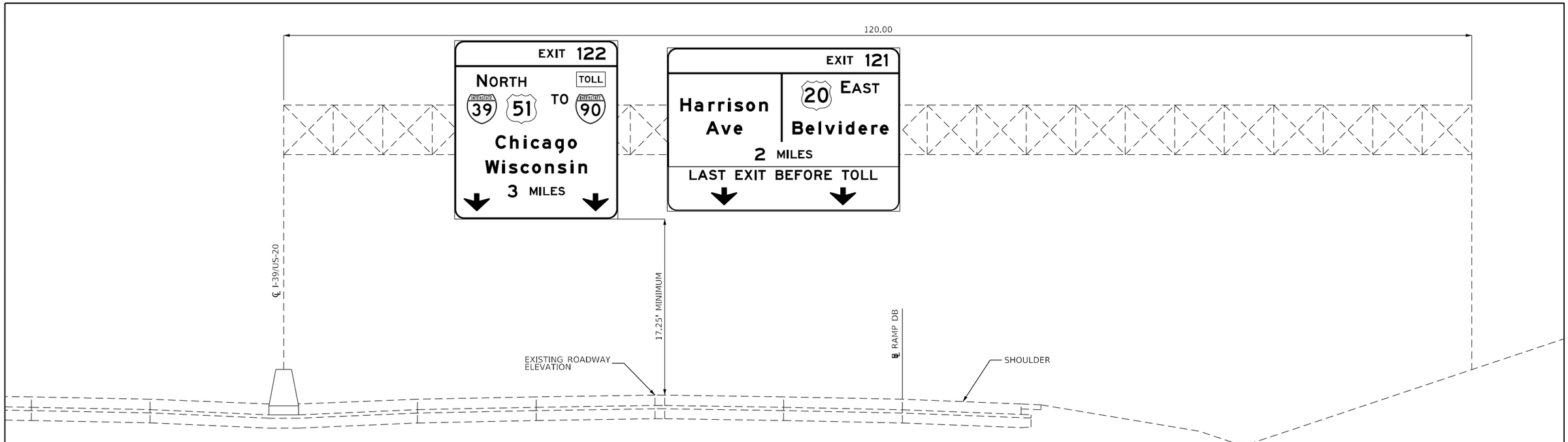

I-39/US-20 2603+00

(LOOKING NORTH)
EXISTING OVERHEAD SIGN TRUSS

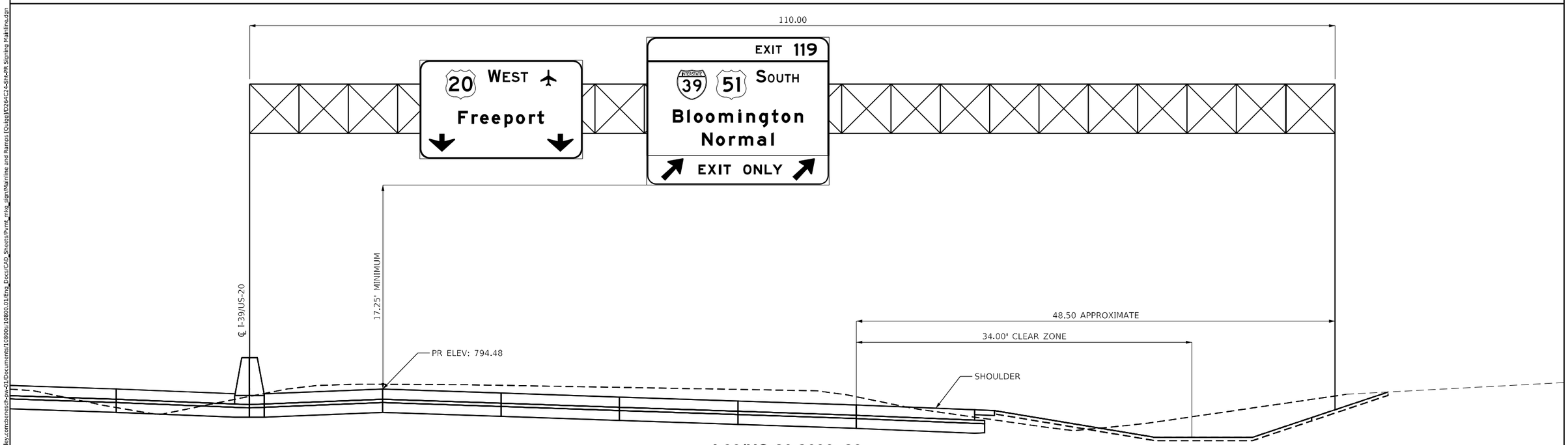

I-39/US-20 2630+80

(LOOKING SOUTH)
PROPOSED OVERHEAD SIGN TRUSS

MODEL: PMK-15 [Sheet]
FILE NAME: pw://benesch-pw.bentley.com:benesch-pw-01/Documents/10800-10800.01/Eng_Docs/CAD_Sheets/Pvmk_mkg_sign/Mainline and Ramps [QuiggJD]254C24-Sht-PR Signing Mainline.dgn

QUIGG ENGINEERING INC

USER NAME = mwilson	DESIGNED - MW	REVISED -	
	DRAWN - MW	REVISED -	
PLOT SCALE = 0.16666633 ' / in.	CHECKED - FBN	REVISED -	
PLOT DATE = 2/7/2025	DATE - 02/14/2025	REVISED -	

STATE OF ILLINOIS
DEPARTMENT OF TRANSPORTATION

PROPOSED SIGNING
ELEVATION VIEWS

SCALE: 1"=5' | SHEET 14 OF 28 SHEETS | STA. TO STA.

F.A.I. RTE.	SECTION	COUNTY	TOTAL SHEETS	SHEET NO.
39	(201-3)R & (4-1.5)R	WINNEBAGO	1685	414
		CONTRACT NO. 64C24		
		ILLINOIS	FED. AID PROJECT	

* FAI ROUTE 39 (I-39) & FAP 301 (US 20)

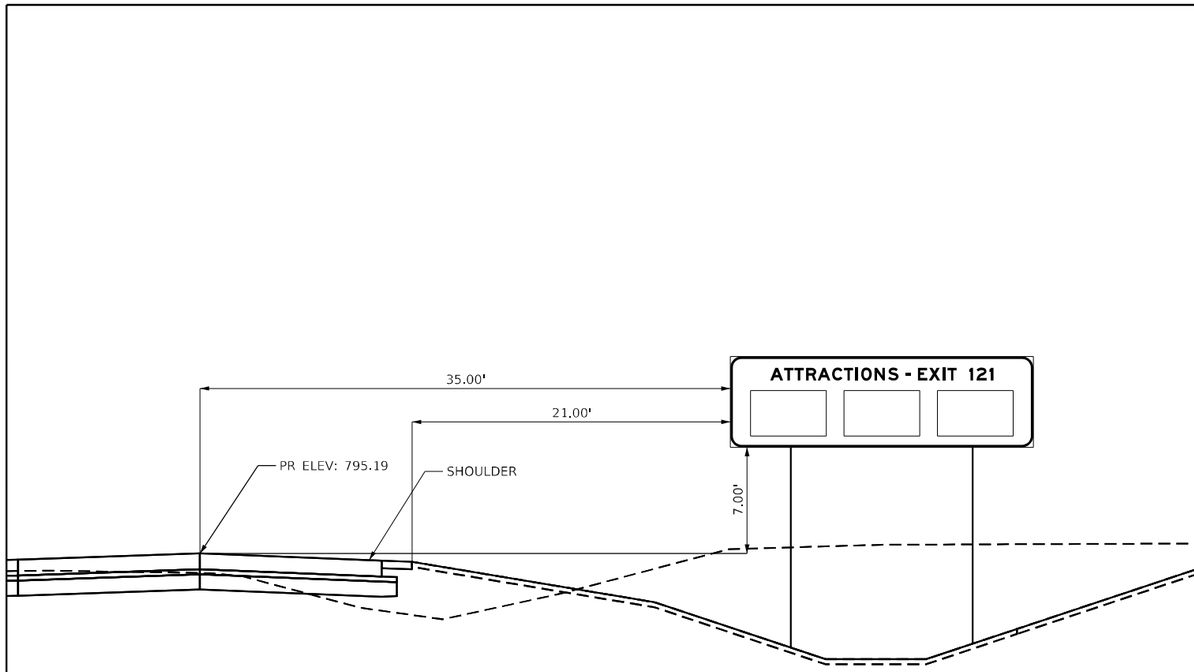

I-39/US-20 2628+50

(LOOKING NORTH)
PROPOSED GROUND MOUNTED SIGN

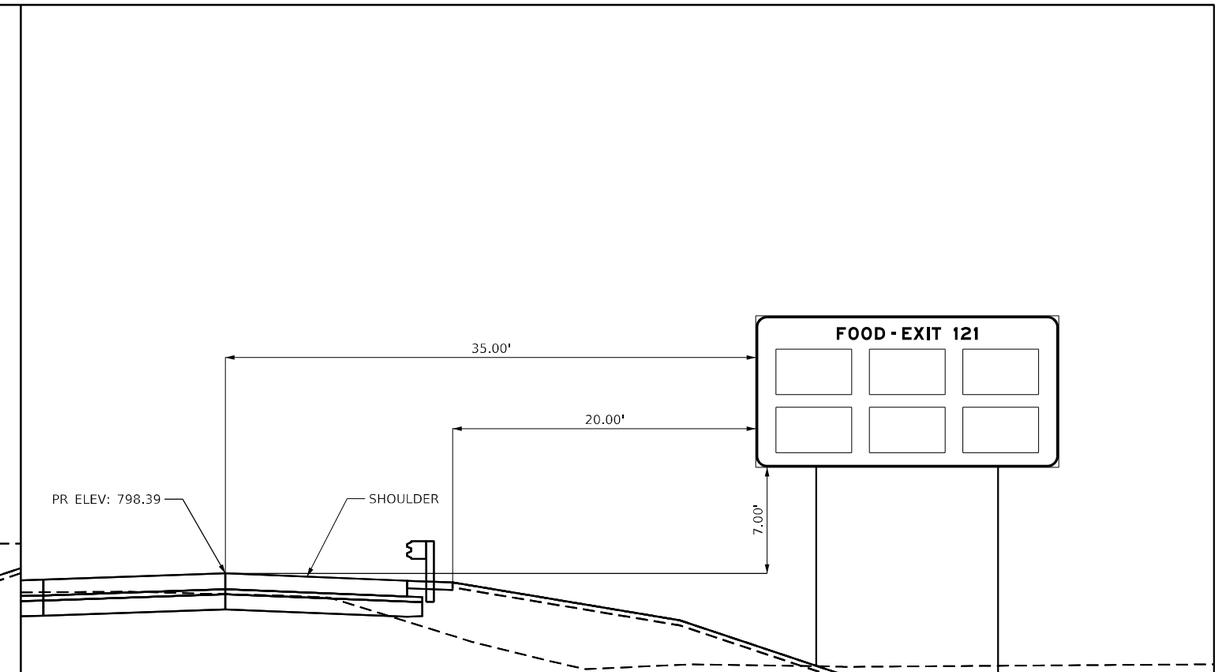

I-39/US-20 2636+50

(LOOKING NORTH)
PROPOSED GROUND MOUNTED SIGN

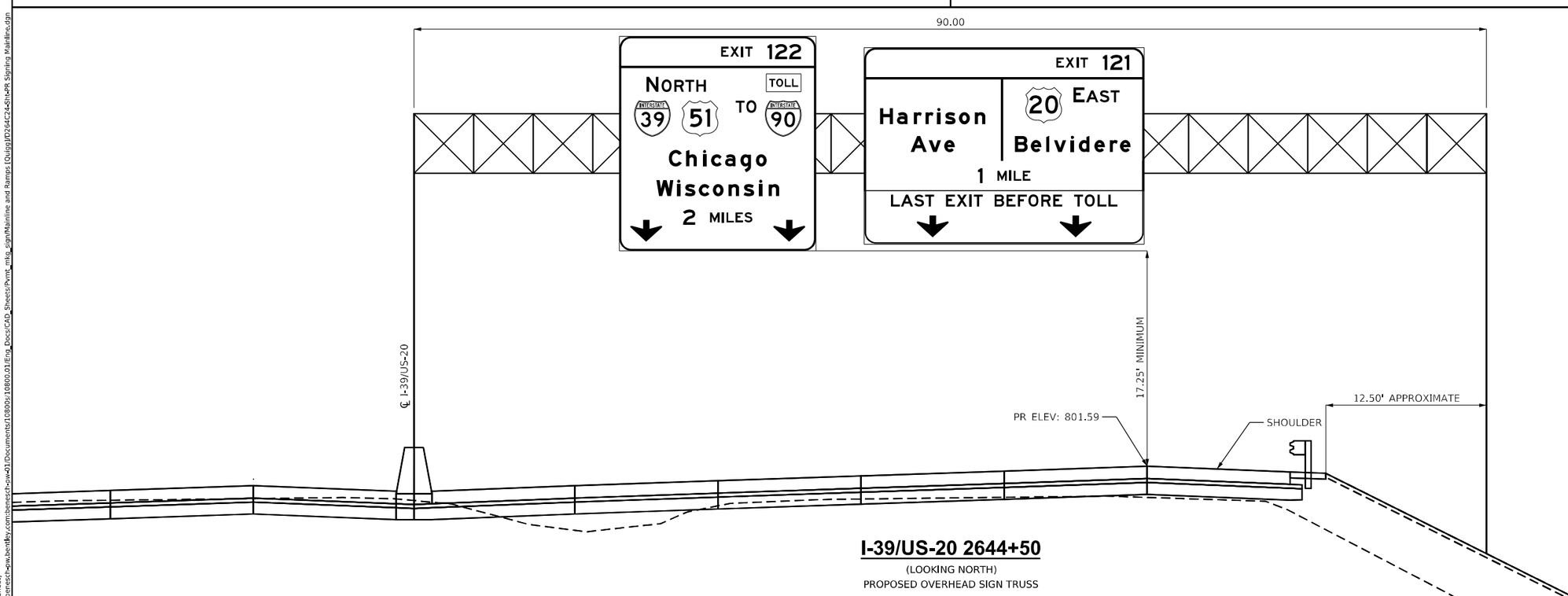

I-39/US-20 2644+50

(LOOKING NORTH)
PROPOSED OVERHEAD SIGN TRUSS

MODEL: PMK-16 [Sheet]
FILE NAME: pw://benesch-pw-01.bentley.com:benesch-pw-01/Documents/108009/108009.01/Eng_Docs/CAD_Sheets/Pvmk_mkg_sign/Mainline and Ramps [Quigg]/D264C24SIN-PR Signing Mainline.dgn

QUIGG ENGINEERING INC

USER NAME = mwilson	DESIGNED - MW	REVISED -	
	DRAWN - MW	REVISED -	
PLOT SCALE = 0.16666633 ' / in.	CHECKED - FBN	REVISED -	
PLOT DATE = 2/7/2025	DATE - 02/14/2025	REVISED -	

STATE OF ILLINOIS
DEPARTMENT OF TRANSPORTATION

PROPOSED SIGNING
ELEVATION VIEWS

SCALE: 1"=5' | SHEET 15 OF 28 SHEETS | STA. | TO STA.

F.A.I. RTE.	SECTION	COUNTY	TOTAL SHEETS	SHEET NO.
39	(201-3)R & (4-1.5)R	WINNEBAGO	1685	415
		CONTRACT NO. 64C24		
	ILLINOIS	FED. AID PROJECT		

* FAI ROUTE 39 (I-39) & FAP 301 (US 20)

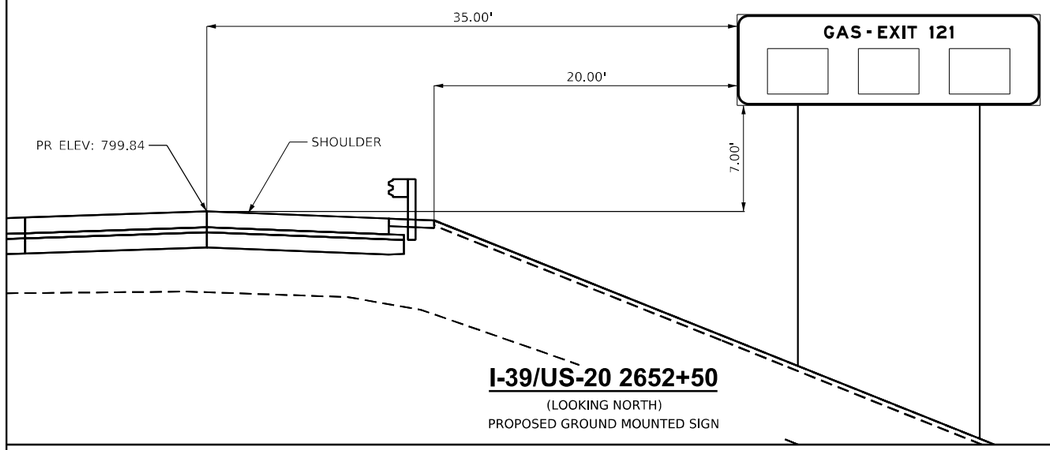

I-39/US-20 2652+50

(LOOKING NORTH)
PROPOSED GROUND MOUNTED SIGN

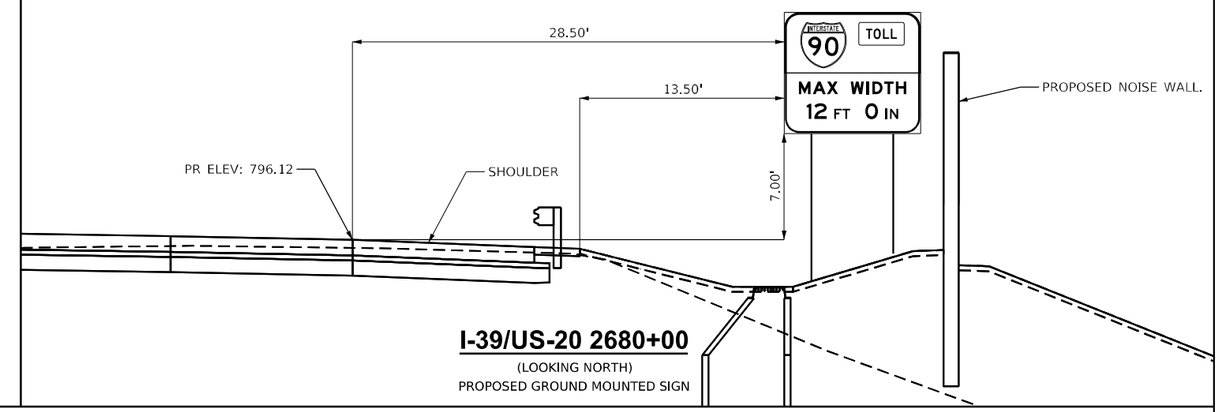

I-39/US-20 2680+00

(LOOKING NORTH)
PROPOSED GROUND MOUNTED SIGN

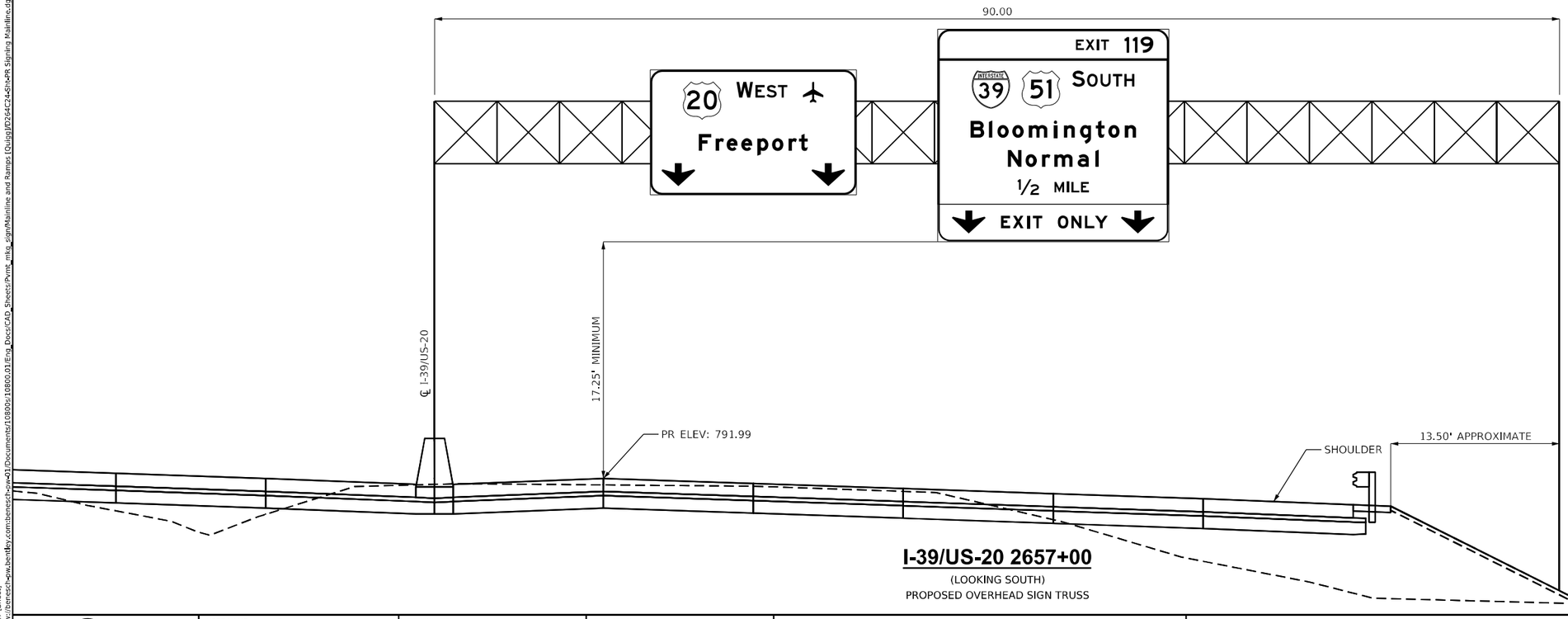

I-39/US-20 2657+00

(LOOKING SOUTH)
PROPOSED OVERHEAD SIGN TRUSS

MODEL: PMK-17 [Sheet]
FILE NAME: pw://benesch-pw.bentley.com:benesch-pw-01/Documents/10800-10800.01/Eng_Docs/CAD_Sheets/Pvmt_mkg_sign/Mainline and Ramps [QuiggJD]64C24-Sht-PR Signing Mainline.dgn

QUIGG ENGINEERING INC

USER NAME = mwilson	DESIGNED - MW	REVISED -	
	DRAWN - MW	REVISED -	
PLOT SCALE = 0.16666633 ' / in.	CHECKED - FBN	REVISED -	
PLOT DATE = 2/7/2025	DATE - 02/14/2025	REVISED -	

STATE OF ILLINOIS
DEPARTMENT OF TRANSPORTATION

PROPOSED SIGNING
ELEVATION VIEWS

SCALE: 1"=5' | SHEET 16 OF 28 SHEETS | STA. TO STA.

F.A.I. RTE.	SECTION	COUNTY	TOTAL SHEETS	SHEET NO.
39	(201-3)R & (4-1.5)R	WINNEBAGO	1685	416
		CONTRACT NO. 64C24		
		ILLINOIS	FED. AID PROJECT	

* FAI ROUTE 39 (I-39) & FAP 301 (US 20)

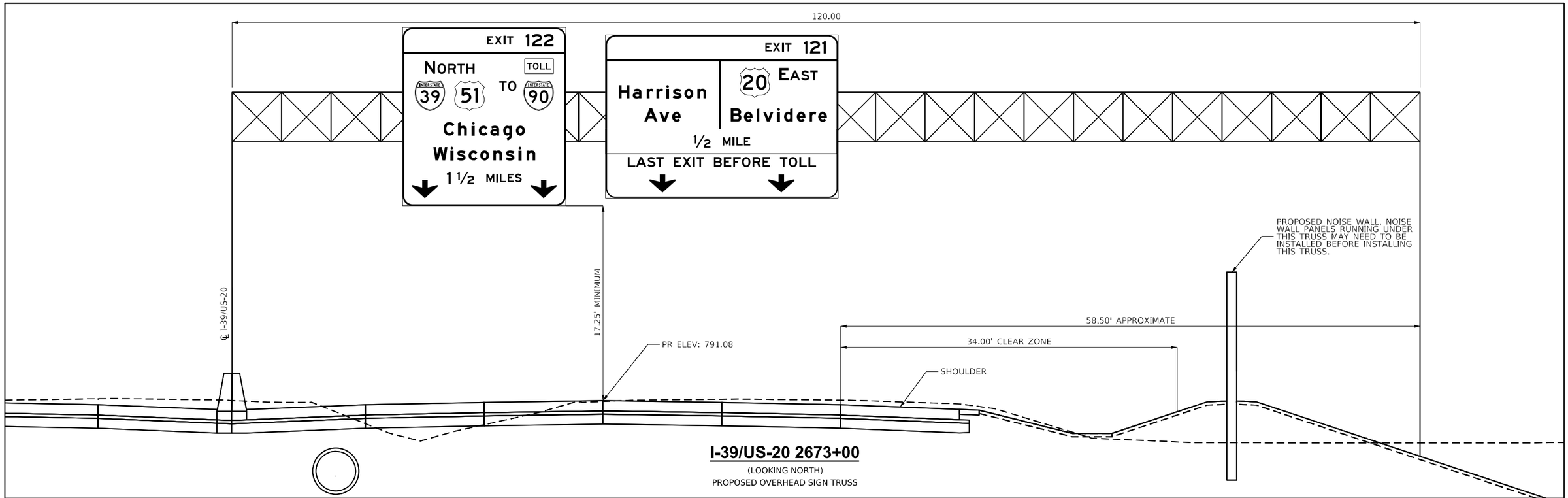

I-39/US-20 2673+00

(LOOKING NORTH)

PROPOSED OVERHEAD SIGN TRUSS

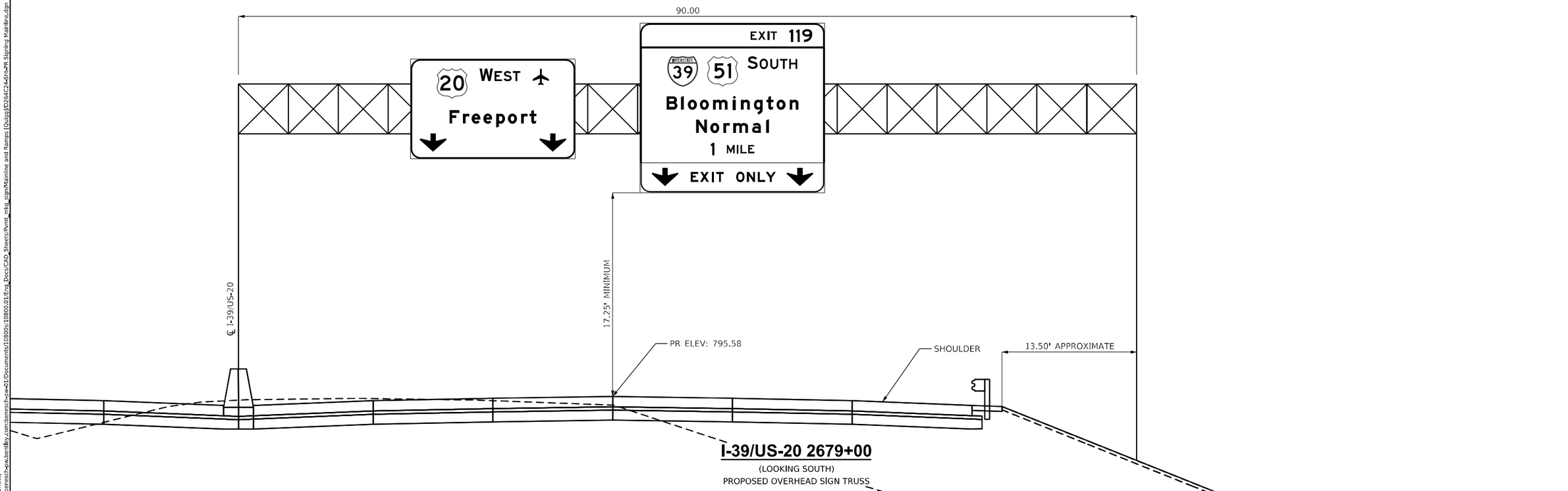

I-39/US-20 2679+00

(LOOKING SOUTH)

PROPOSED OVERHEAD SIGN TRUSS

MODEL: PMK-18 [Sheet]
FILE NAME: pw://benesch-pw-01.bentley.com:benesch-pw-01\Documents\10800s\10800.01\Eng_Docs\CAD_Sheets\Pvmk_mkg_sign\Mainline and Ramps [Quigg]\D264C24SIN-PR Signing Mainline.dgn

QUIGG ENGINEERING INC

USER NAME = mwilson	DESIGNED - MW	REVISED -	
	DRAWN - MW	REVISED -	
PLOT SCALE = 0.16666633 ' / in.	CHECKED - FBN	REVISED -	
PLOT DATE = 2/7/2025	DATE - 02/14/2025	REVISED -	

STATE OF ILLINOIS
DEPARTMENT OF TRANSPORTATION

PROPOSED SIGNING
ELEVATION VIEWS

SCALE: 1"=5' | SHEET 17 OF 28 SHEETS | STA. | TO STA.

F.A.I. RTE.	SECTION	COUNTY	TOTAL SHEETS	SHEET NO.
39	(201-3)R & (4-1.5)R	WINNEBAGO	1685	417

CONTRACT NO. 64C24

ILLINOIS | FED. AID PROJECT

* FAI ROUTE 39 (I-39) & FAP 301 (US 20)

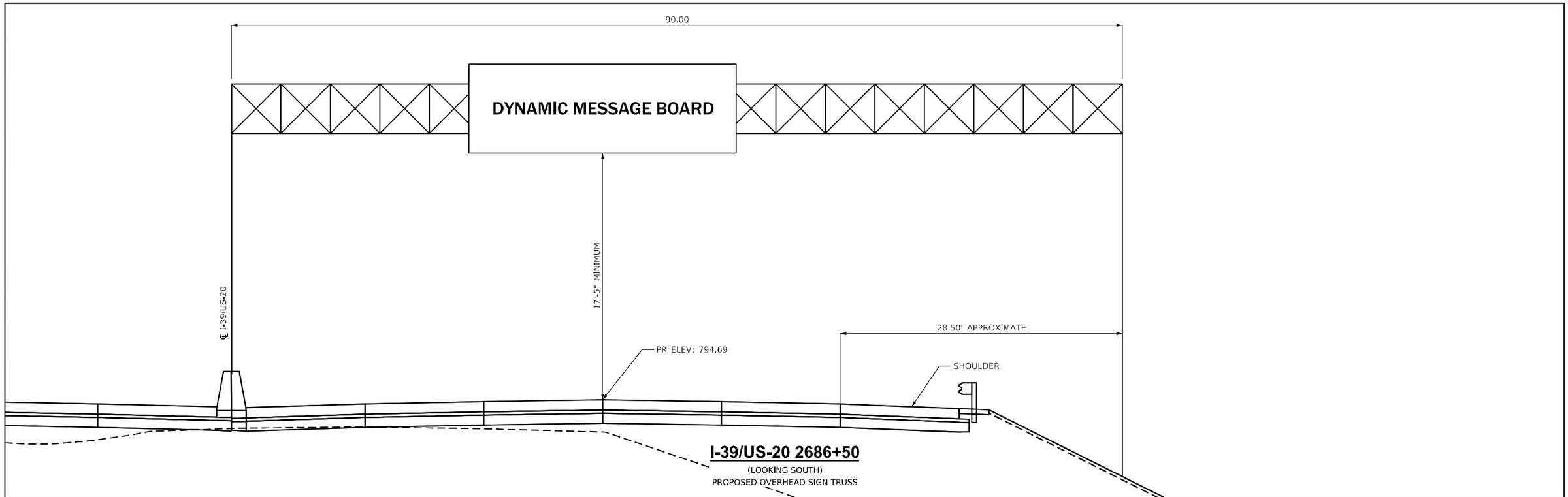

I-39/US-20 2686+50

(LOOKING SOUTH)

PROPOSED OVERHEAD SIGN TRUSS

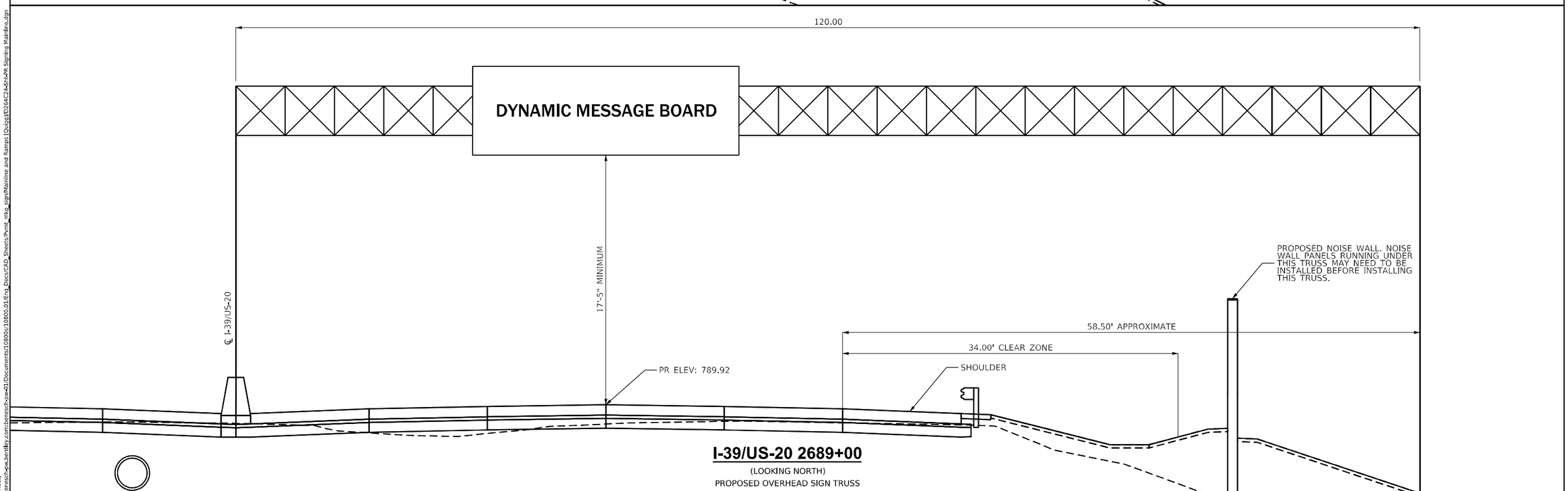

I-39/US-20 2689+00

(LOOKING NORTH)

PROPOSED OVERHEAD SIGN TRUSS

MODEL: PMK-19 [Sheet]
FILE NAME: pw://benesch-pw.bentley.com:benesch-pw-01/Documents/10800-10800.01/Eng_Docs/CAD_Sheets/Pvmt_mkg_sign/Mainline and Ramps [Quigg]/D254C24-Sht-PR Signing Mainline.dgn

QUIGG ENGINEERING INC

USER NAME = mwilson	DESIGNED - MW	REVISED -	
	DRAWN - MW	REVISED -	
PLOT SCALE = 0.16666633 ' / in.	CHECKED - FBN	REVISED -	
PLOT DATE = 2/7/2025	DATE - 02/14/2025	REVISED -	

STATE OF ILLINOIS
DEPARTMENT OF TRANSPORTATION

PROPOSED SIGNING ELEVATION VIEWS

SCALE: 1"=5' | SHEET 18 OF 28 SHEETS | STA. TO STA.

F.A.I. RTE.	SECTION	COUNTY	TOTAL SHEETS	SHEET NO.
39	(201-3)R & (4-1.5)R	WINNEBAGO	1685	418

CONTRACT NO. 64C24

ILLINOIS | FED. AID PROJECT

* FAI ROUTE 39 (I-39) & FAP 301 (US 20)

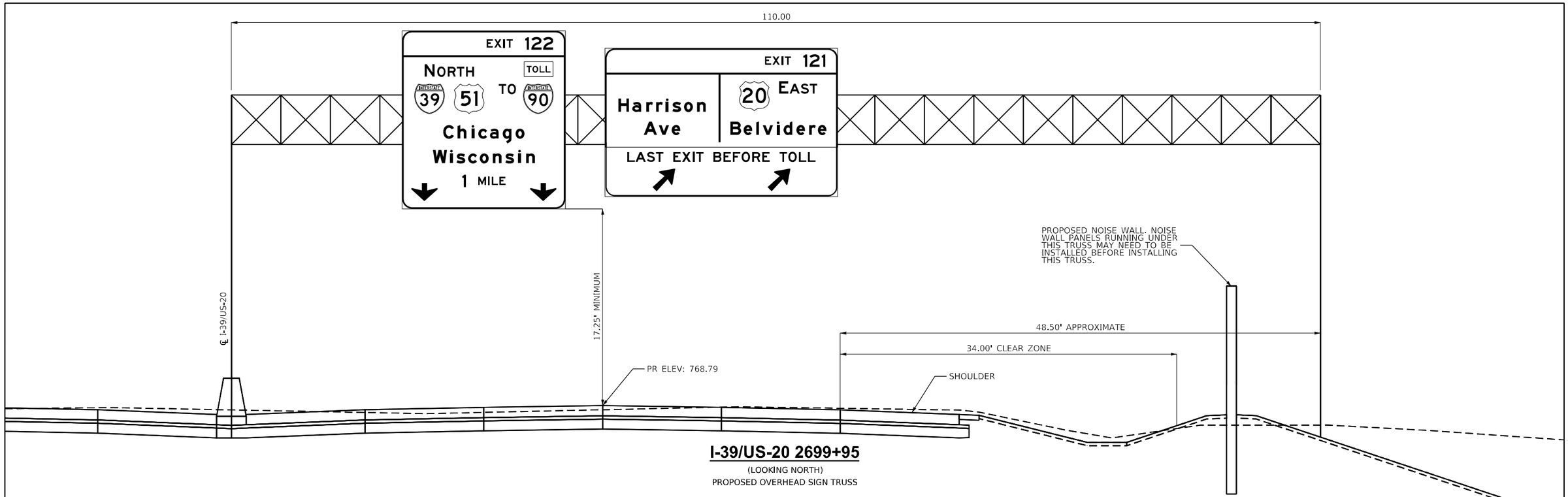

I-39/US-20 2699+95

(LOOKING NORTH)

PROPOSED OVERHEAD SIGN TRUSS

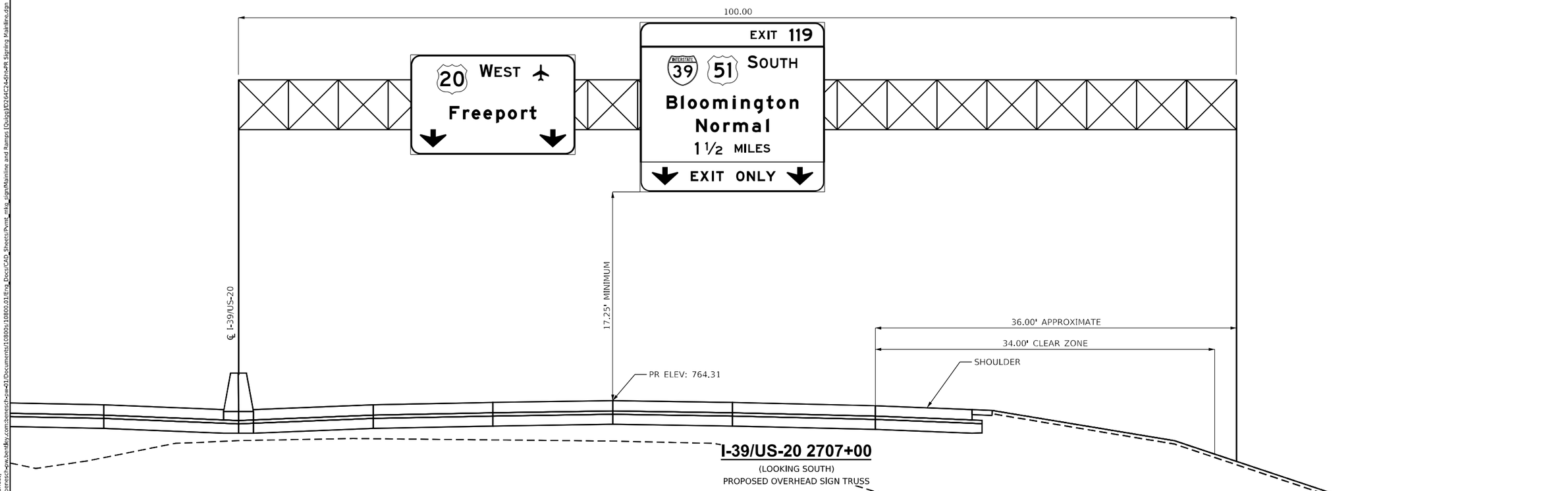

I-39/US-20 2707+00

(LOOKING SOUTH)

PROPOSED OVERHEAD SIGN TRUSS

MODEL: PMK-20 [Sheet]
FILE NAME: pw://benesch-pw.bentley.com:benesch-pw-01/Documents/108009/108000.01/Eng_Docs/CAD_Sheets/Pvmk_mkg_sign/Mainline and Ramps [Quigg]/D264C24SIN-PR Signing Mainline.dgn

QUIGG ENGINEERING INC

USER NAME = mwilson	DESIGNED - MW	REVISED -	
	DRAWN - MW	REVISED -	
PLOT SCALE = 0.16666633 ' / in.	CHECKED - FBN	REVISED -	
PLOT DATE = 2/7/2025	DATE - 02/14/2025	REVISED -	

STATE OF ILLINOIS
DEPARTMENT OF TRANSPORTATION

PROPOSED SIGNING
ELEVATION VIEWS

SCALE: 1"=5' | SHEET 19 OF 28 SHEETS | STA. | TO STA.

F.A.I. RTE.	SECTION	COUNTY	TOTAL SHEETS	SHEET NO.
39	(201-3)R & (4-1.5)R	WINNEBAGO	1685	419
		CONTRACT NO. 64C24		
	ILLINOIS	FED. AID PROJECT		

* FAI ROUTE 39 (I-39) & FAP 301 (US 20)

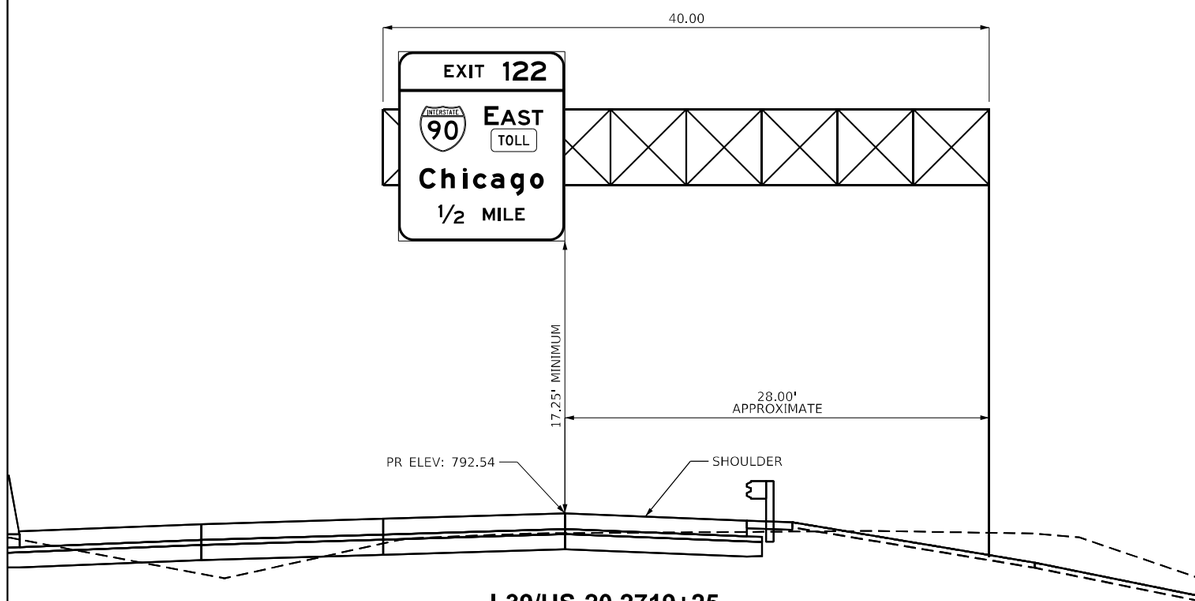

I-39/US-20 2719+25

(LOOKING NORTH)
PROPOSED CANTILEVER SIGN TRUSS

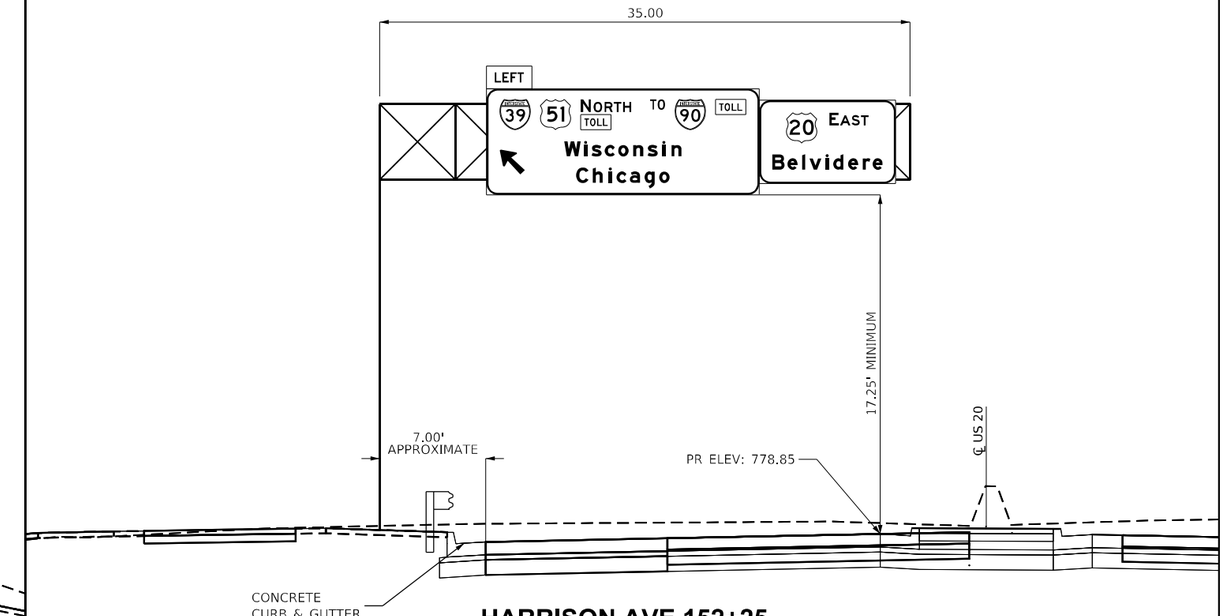

HARRISON AVE 152+25

(LOOKING EAST)
PROPOSED CANTILEVER SIGN TRUSS

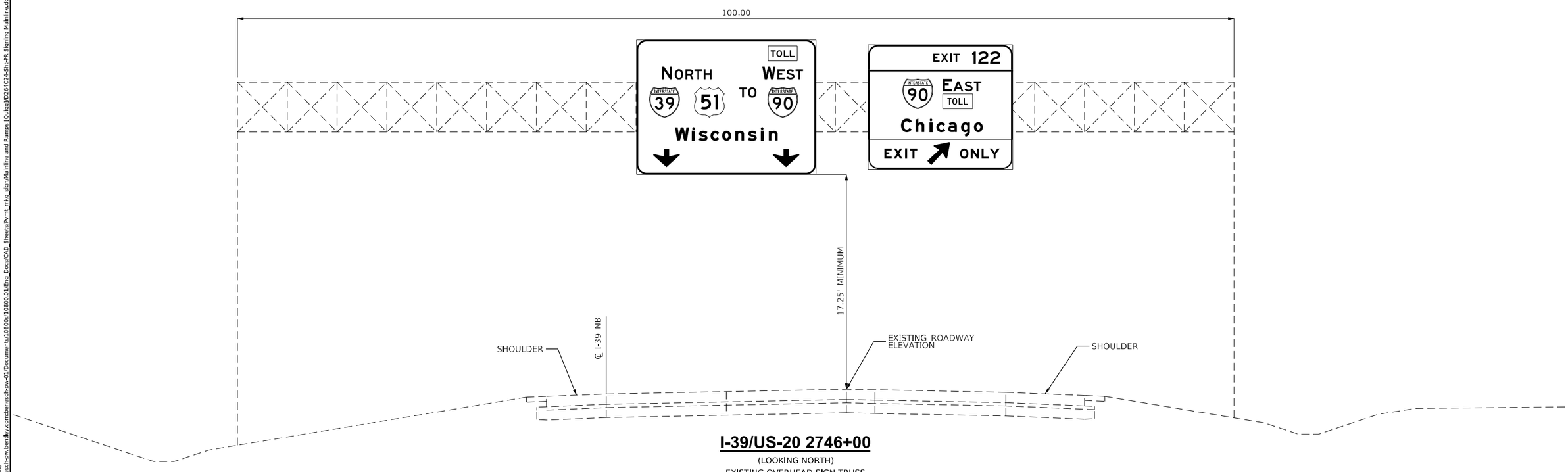

I-39/US-20 2746+00

(LOOKING NORTH)
EXISTING OVERHEAD SIGN TRUSS

MODEL: PMK-21 [Sheet]
FILE NAME: pw://benesch-pw.bentley.com:benesch-pw-01/Documents/108009/108009.01/Eng_Docs/CAD_Sheets/Pvmt_wlks_sign/Mainline and Ramps [Quigg]/D254C24-SH-PR Signing Mainline.dgn

QUIGG ENGINEERING INC	USER NAME = mwilson	DESIGNED - MW	REVISED -	STATE OF ILLINOIS DEPARTMENT OF TRANSPORTATION	PROPOSED SIGNING ELEVATION VIEWS
		DRAWN - MW	REVISED -		
	PLOT SCALE = 0.16666633 ' / in.	CHECKED - FBN	REVISED -		
	PLOT DATE = 2/7/2025	DATE - 02/14/2025	REVISED -		SCALE: 1"=5' SHEET 20 OF 28 SHEETS STA. TO STA.

F.A.I. RTE.	SECTION	COUNTY	TOTAL SHEETS	SHEET NO.
39	(201-3)R & (4-1.5)R	WINNEBAGO	1685	420
		CONTRACT NO. 64C24		
	ILLINOIS	FED. AID PROJECT		

* FAI ROUTE 39 (I-39) & FAP 301 (US 20)

I-39/US-20 2603+00

12.0" Radius, 2.0" Border, White on Green;
"EXIT", E 2K 120% spacing; " 122", E 2K;

12.0" Radius, 2.0" Border, White on Green;
"NORTH", E 2K; Rectangle Fluorescent Yellow;
"TO", E 2K; "Chicago", E Mod 2K; "Wisconsin", E Mod 2K; "3 MILES", E 2K; Down Arrow 22.0" 270";
Down Arrow 22.0" 270";
Table of letter and object lefts

E 102.5	X 111.7	I 122.8	T 126.8	1 149.1	2 156.6	2 170.9	
N 27.2	O 42.4	R 55.3	T 86.3	H 77.3	■ 147.8		
● 15.1	■ 63.1	T 117.1	O 127.8	● 146.9			
C 49.7	h 67.2	i 84.1	c 92.3	a 106.4	g 121.9	o 137.4	
W 37.2	i 58.0	s 65.9	c 80.0	o 94.2	n 109.9	s 125.1	i 140.6	n 150.2
3 64.1	M 91.3	I 103.3	L 107.7	E 116.9	S 125.8		
↓ 11.0	↓ 155.0						

I-39/US-20 2603+00

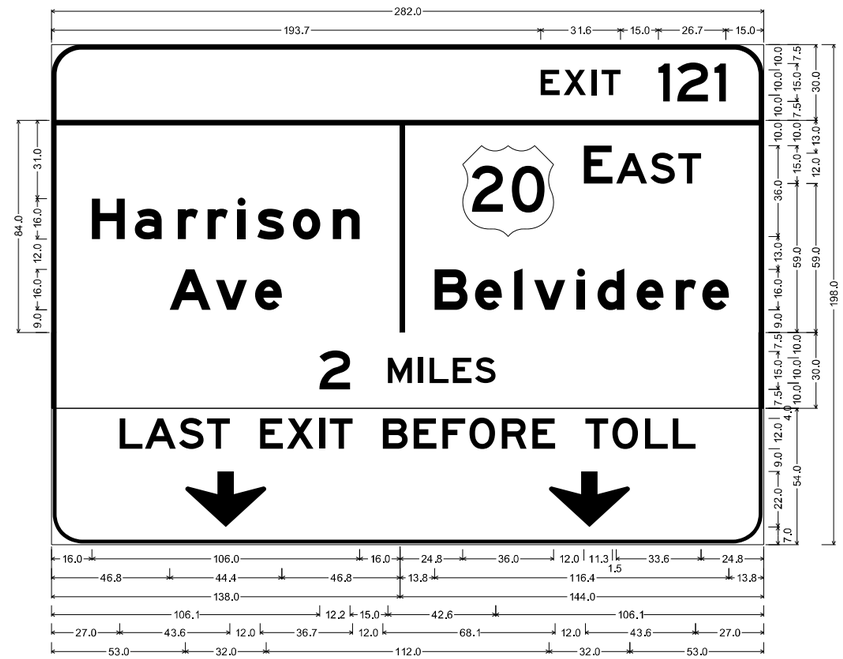

12.0" Radius, 2.0" Border, White on Green;
"EXIT", E 2K 120% spacing; " 121", E 2K;

12.0" Radius, 2.0" Border, White on Green;
"Harrison", E Mod 2K; "Ave", E Mod 2K;

12.0" Radius, 2.0" Border, White on Green;
"EAST", E 2K; "Belvidere", E Mod 2K;

12.0" Radius, 2.0" Border, White on Green;
"2 MILES", E 2K;

12.0" Radius, 1.5" Border, 0.5" Indent, Black on Fluorescent Yellow;
"LAST EXIT BEFORE TOLL", E 2K; Down Arrow 22.0" 270"; Down Arrow 22.0" 270";
Table of distances between letter and object lefts

193.7	E 9.2	X 11.1	I 3.8	T 22.5	1 7.5	2 14.7	1 4.5	15.0																		
16.0	H 17.0	a 17.0	r 11.8	r 11.8	i 7.9	s 14.1	o 15.8	n 10.6	160.0																	
46.8	A 18.3	v 15.5	e 10.6	190.8																						
162.8	■ 48.0	E 12.8	A 13.5	S 11.1	T 9.0	24.8																				
151.8	B 16.0	e 15.5	l 7.8	v 17.0	i 8.1	d 15.6	e 15.5	r 10.4	e 10.5	13.8																
106.1	2 27.2	M 12.0	I 4.4	L 9.2	E 8.9	S 8.1	106.1																			
27.0	L 10.0	A 13.5	S 11.1	T 21.0	E 10.6	X 12.9	I 4.2	T 21.0	B 12.1	E 11.4	F 10.7	O 12.8	R 12.1	E 21.0	T 10.7	O 12.9	L 11.0	L 9.0	27.0							
53.0	↓ 144.0	↓ 32.0	53.0																							

12.0" Radius, 2.0" Border, White on Green;
"EXIT", E 2K 120% spacing; " 121", E 2K;

12.0" Radius, 2.0" Border, White on Green;
"Harrison", E Mod 2K; "Ave", E Mod 2K;

12.0" Radius, 2.0" Border, White on Green;
"EAST", E 2K; "Belvidere", E Mod 2K;

12.0" Radius, 2.0" Border, White on Green;
"2 MILES", E 2K;

12.0" Radius, 1.5" Border, 0.5" Indent, Black on Fluorescent Yellow;
"LAST EXIT BEFORE TOLL", E 2K; Down Arrow 22.0" 270"; Down Arrow 22.0" 270";
Table of distances between letter and object lefts

193.7	E 9.2	X 11.1	I 3.8	T 22.5	1 7.5	2 14.7	1 4.5	15.0																		
16.0	H 17.0	a 17.0	r 11.8	r 11.8	i 7.9	s 14.1	o 15.8	n 10.6	160.0																	
46.8	A 18.3	v 15.5	e 10.6	190.8																						
162.8	■ 48.0	E 12.8	A 13.5	S 11.1	T 9.0	24.8																				
151.8	B 16.0	e 15.5	l 7.8	v 17.0	i 8.1	d 15.6	e 15.5	r 10.4	e 10.5	13.8																
106.1	2 27.2	M 12.0	I 4.4	L 9.2	E 8.9	S 8.1	106.1																			
27.0	L 10.0	A 13.5	S 11.1	T 21.0	E 10.6	X 12.9	I 4.2	T 21.0	B 12.1	E 11.4	F 10.7	O 12.8	R 12.1	E 21.0	T 10.7	O 12.9	L 11.0	L 9.0	27.0							
53.0	↓ 144.0	↓ 32.0	53.0																							

MODEL: PMK-22 [Sheet]
FILE NAME: pw://beresch-pw.bentley.com:beresch-pw-01/Documents/108009.10800.01/Eng_Docs/CAD_Sheets/Pvmt_mrks_sign/Mainline and Ramps [Quigg]/D264C24Sh-PR Signing Mainline.dgn

QUIGG ENGINEERING INC

USER NAME = mwilson	DESIGNED - MW	REVISED -	
	DRAWN - MW	REVISED -	
PLOT SCALE = 0.16666633 ' / in.	CHECKED - FBN	REVISED -	
PLOT DATE = 2/11/2025	DATE - 02/14/2025	REVISED -	

STATE OF ILLINOIS
DEPARTMENT OF TRANSPORTATION

PROPOSED SIGNING
SIGN PANEL DETAILS

SCALE: | SHEET 21 OF 28 SHEETS | STA. | TO STA.

F.A.I. RTE.	SECTION	COUNTY	TOTAL SHEETS	SHEET NO.
39	(201-3)R & (4-1.5)R	WINNEBAGO	1685	421
		CONTRACT NO. 64C24		
		ILLINOIS	FED. AID PROJECT	

* FAI ROUTE 39 (I-39) & FAP 301 (US 20)

I-39/US-20 2628+50

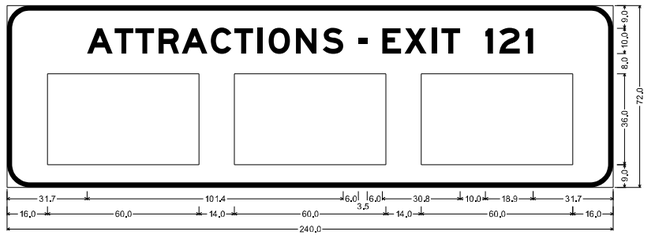

9.0" Radius, 2.0" Border, White on Blue:
"ATTRACTIONS - EXIT 121", E Mod 2K:
Table of letter and object lefts

A	T	T	R	A	C	T	I	O	N	S	-	E	X	I	T	I	2	1				
31.7	42.6	50.8	60.0	69.2	80.7	90.0	99.2	103.6	114.4	125.0	139.1	148.6	157.4	168.2	172.0	189.4	194.9	205.3				
■	■	■																				
16.0	90.0	164.0																				

I-39/US-20 2630+80

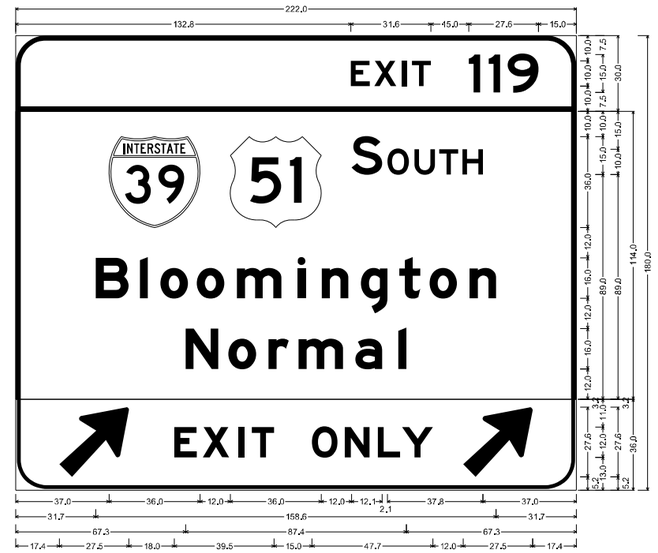

12.0" Radius, 2.0" Border, White on Green:
"EXIT", E 2K 120% spacing: " 119", E 2K:

12.0" Radius, 2.0" Border, White on Green:
"SOUTH", E 2K: "Bloomington", E Mod 2K: "Normal", E Mod 2K:

12.0" Radius, 1.5" Border, 0.5" Indent, Black on Fluorescent Yellow:
Arrow 160 - 35.0° 45°: "EXIT", E Mod 2K 140% spacing: "ONLY", E Mod 2K: Arrow 160 - 35.0° 45°:
Table of distances between letter and object lefts

	E	X	I	T	1	1	9															
132.8	9.2	11.1	3.8	22.5	8.0	7.5	12.1	15.0														
	●	■	S	O	U	T	H															
37.0	48.0	48.0	14.2	10.7	9.8	9.2	8.1	37.0														
	B	l	o	o	m	l	n	g	t	o	n											
31.7	17.5	8.1	14.4	15.9	24.0	9.6	15.5	15.2	12.0	15.8	10.6	31.7										
	N	o	r	m	a	l																
67.3	17.0	15.8	11.9	22.5	17.0	3.2	67.3															
	↗	E	X	I	T	O	N	L	Y	↗												
17.4	45.5	11.2	14.0	5.4	23.9	12.9	13.1	9.6	24.1	27.5	17.4											

I-39/US-20 2644+50

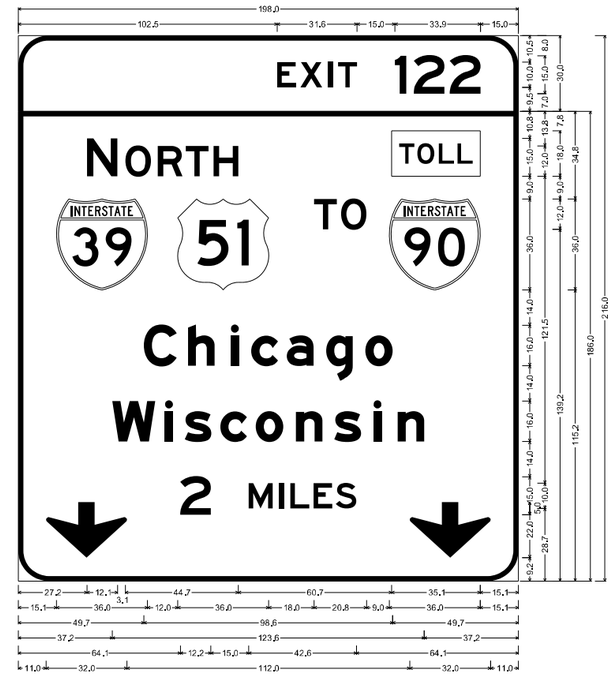

12.0" Radius, 2.0" Border, White on Green:
"EXIT", E 2K 120% spacing: " 122", E 2K:

12.0" Radius, 2.0" Border, White on Green:
"NORTH", E 2K: Rectangle Fluorescent Yellow:
"TO", E 2K: "Chicago", E Mod 2K: "Wisconsin", E Mod 2K: "2 MILES", E 2K: Down Arrow 22.0° 270°:
Down Arrow 22.0° 270°:
Table of letter and object lefts

E	X	I	T	1	2	2																
102.5	111.7	122.8	126.6	149.1	156.6	170.9																
N	O	R	T	H	■																	
27.2	42.4	55.3	66.3	77.3	147.8																	
●	■	T	O	●																		
15.1	63.1	117.1	127.8	146.9																		
C	h	i	c	a	g	o																
49.7	67.2	84.1	92.3	106.4	121.9	137.4																
W	i	s	c	o	n	s	i	n														
37.2	58.0	65.9	80.0	94.0	109.9	125.1	140.6	150.2														
2	M	I	L	E	S																	
64.1	91.3	103.3	107.7	116.9	125.8																	
↓	↓																					
11.0	155.0																					

I-39/US-20 2636+50

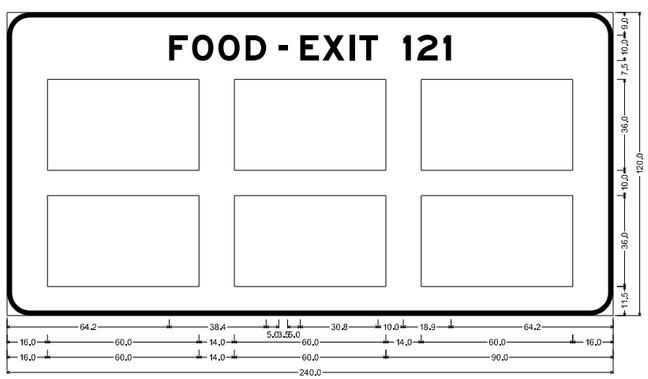

9.0" Radius, 2.0" Border, White on Blue:
"FOOD - EXIT 121", E Mod 2K:
Table of letter and object lefts

F	O	O	D	-	E	X	I	T	1	2	1											
64.2	73.3	83.7	94.5	107.6	116.1	124.9	135.7	139.5	156.9	162.4	172.8											
■	■	■																				
16.0	90.0	164.0																				
■	■	■																				
16.0	90.0	164.0																				

MODEL: PMK-23 [Sheet]
FILE NAME: pw://beresch-pw.bentley.com:beresch-pw-01/Documents/108009/10800.01/Eng_Docs/CAD_Sheets/Pvmt_mrks_sign/Mainline and Ramps [Quigg]/D264C24-Sh-PR Signing Mainline.dgn

QUIGG ENGINEERING INC	USER NAME = mwilson	DESIGNED - MW	REVISED -	STATE OF ILLINOIS DEPARTMENT OF TRANSPORTATION	PROPOSED SIGNING SIGN PANEL DETAILS
		DRAWN - MW	REVISED -		
	PLOT SCALE = 0.16666633 ' / in.	CHECKED - FBN	REVISED -		
	PLOT DATE = 2/11/2025	DATE - 02/14/2025	REVISED -		

SCALE:	SHEET 22	OF 28	SHEETS	STA.	TO STA.

F.A.I. RTE.	SECTION	COUNTY	TOTAL SHEETS	SHEET NO.
39	(201-3)R & (4-1.5)R	WINNEBAGO	1685	422
		CONTRACT NO. 64C24		
	ILLINOIS	FED. AID PROJECT		

* FAI ROUTE 39 (I-39) & FAP 301 (US 20)

I-39/US-20 2652+50

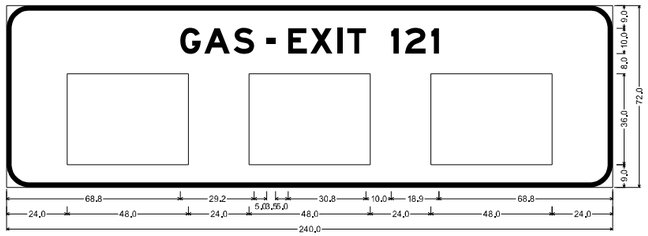

9.0" Radius, 2.0" Border, White on Blue;
"GAS - EXIT 121", E Mod 2K;
Table of letter and object lefts

G	A	S	-	E	X	I	T	1	2	1	
68.8	78.3	89.9	103.0	111.5	120.3	131.1	134.9	152.3	157.8	168.2	
■	■	■									
24.0	96.0	168.0									

I-39/US-20 2630+80, 2657+20 2679+00, & 2707+00

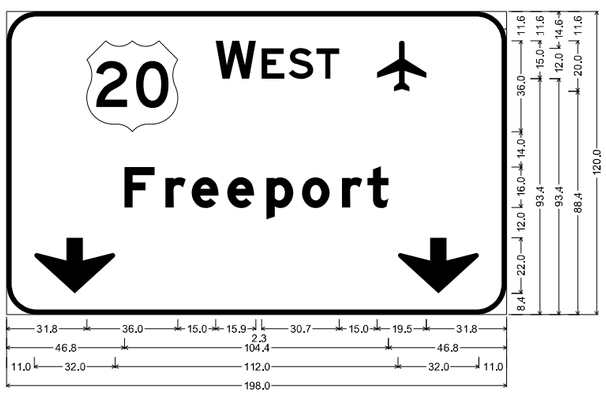

12.0" Radius, 2.0" Border, White on Green;
"WEST", E 2K; Symbol RA010; "Freeport", E Mod 2K; Down Arrow 22.0" 270°;
Down Arrow 22.0" 270°;
Table of distances between letter and object lefts

	■	W	E	S	T	✈					
31.8	51.0	18.2	10.7	11.0	24.0	19.5	31.8				
F	r	e	e	p	o	r	t				
46.8	16.1	10.4	14.1	15.5	14.1	15.8	10.1	8.3	46.8		
↓	↓										
11.0	144.0	32.0	11.0								

I-39/US-20 2644+50

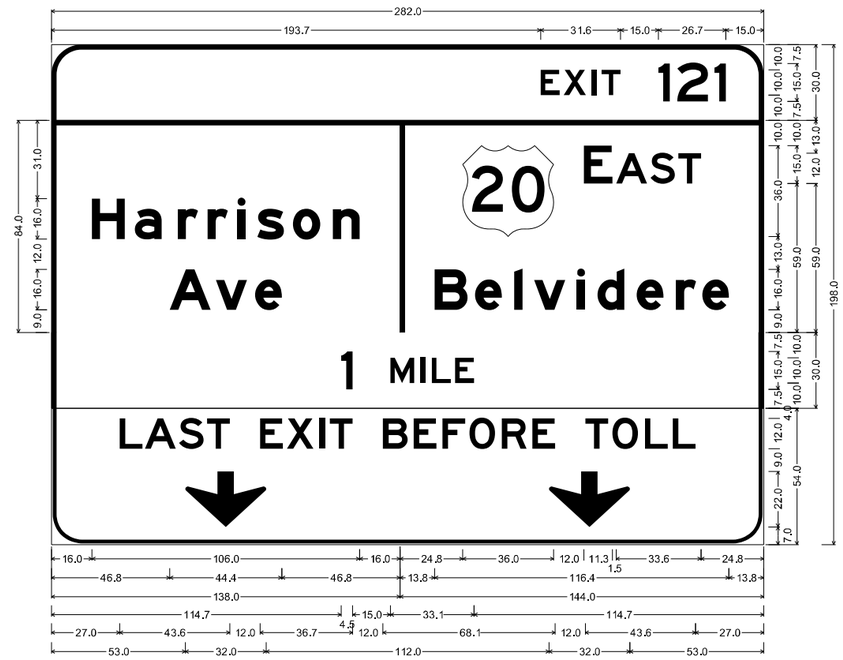

12.0" Radius, 2.0" Border, White on Green;
"EXIT", E 2K 120% spacing; " 121", E 2K;

12.0" Radius, 2.0" Border, White on Green;
"Harrison", E Mod 2K; "Ave", E Mod 2K;

12.0" Radius, 2.0" Border, White on Green;
"EAST", E 2K; "Belvidere", E Mod 2K;

12.0" Radius, 2.0" Border, White on Green;
"1 MILE", E 2K;

12.0" Radius, 1.5" Border, 0.5" Indent, Black on Fluorescent Yellow;
"LAST EXIT BEFORE TOLL", E 2K; Down Arrow 22.0" 270°; Down Arrow 22.0" 270°;
Table of distances between letter and object lefts

	E	X	I	T	1	2	1																								
193.7	9.2	11.1	3.8	22.5	7.5	14.7	4.5	15.0																							
H	a	r	r	i	s	o	n																								
16.0	17.0	17.0	11.8	11.8	7.9	14.1	15.8	10.6	160.0																						
A	v	e																													
46.8	18.3	15.5	10.6	190.8																											
■	E	A	S	T																											
162.8	48.0	12.8	13.5	11.1	9.0	24.8																									
B	e	l	v	i	d	e	r	e																							
151.8	16.0	15.5	7.8	17.0	8.1	15.6	15.5	10.4	10.5	13.8																					
I	M	I	L	E																											
114.7	19.5	12.0	4.4	9.2	7.5	114.7																									
L	A	S	T	E	X	I	T	B	E	F	O	R	E	T	O	L	L														
27.0	10.0	13.5	11.1	21.0	10.6	12.9	4.2	21.0	12.1	11.4	10.7	12.8	12.1	21.0	10.7	12.9	11.0	9.0	27.0												
↓	↓																														
53.0	144.0	32.0	53.0																												

QUIGG ENGINEERING INC

USER NAME = mwilson	DESIGNED - MW	REVISED -	
	DRAWN - MW	REVISED -	
PLOT SCALE = 0.16666633 ' / in.	CHECKED - FBN	REVISED -	
PLOT DATE = 2/11/2025	DATE - 02/14/2025	REVISED -	

STATE OF ILLINOIS
DEPARTMENT OF TRANSPORTATION

PROPOSED SIGNING
SIGN PANEL DETAILS

SCALE: | SHEET 23 OF 28 SHEETS | STA. | TO STA.

F.A.I. RTE.	SECTION	COUNTY	TOTAL SHEETS	SHEET NO.
39	(201-3)R & (4-1.5)R	WINNEBAGO	1685	423
		CONTRACT NO. 64C24		
		ILLINOIS	FED. AID PROJECT	

* FAI ROUTE 39 (I-39) & FAP 301 (US 20)

I-39/US-20 2657+00

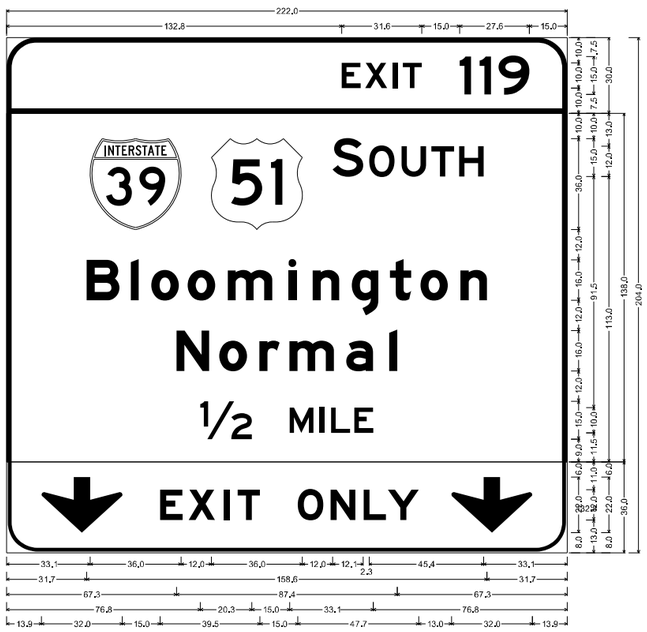

12.0" Radius, 2.0" Border, White on Green;
"EXIT", E 2K 120% spacing; " 119", E 2K;

12.0" Radius, 2.0" Border, White on Green;
"SOUTH", E 2K; "Bloomington", E Mod 2K; "Normal", E Mod 2K; "½ MILE", E 2K;

12.0" Radius, 1.5" Border, 0.5" Indent, Black on Fluorescent Yellow;
Down Arrow 22.0" 270°; "EXIT ", E Mod 2K 140% spacing; "ONLY", E Mod 2K; Down Arrow 22.0" 270°;
Table of distances between letter and object lefts

132.8	E 9.2	X 11.1	I 3.8	T 22.5	I 8.0	I 7.5	9 12.1	15.0	
33.1	● 48.0	● 48.0	S 14.4	O 12.9	U 11.7	T 11.1	H 9.7	33.1	
31.7	B 17.5	l 8.1	o 14.4	o 15.9	m 24.0	b 9.6	l 15.5	n 10.6	g 15.2	t 12.0	o 15.8	n 10.6	31.7
67.3	N 17.0	o 15.8	r 11.9	m 22.5	a 17.0	l 3.2	67.3						
76.8	½ 35.3	M 12.0	I 4.4	L 9.2	E 7.5	76.8							
13.9	↓ 47.0	E 11.2	X 14.0	I 5.4	T 23.9	O 12.9	N 13.1	L 9.6	Y 25.1	↓ 32.0	13.9		

I-39/US-20 2673+00

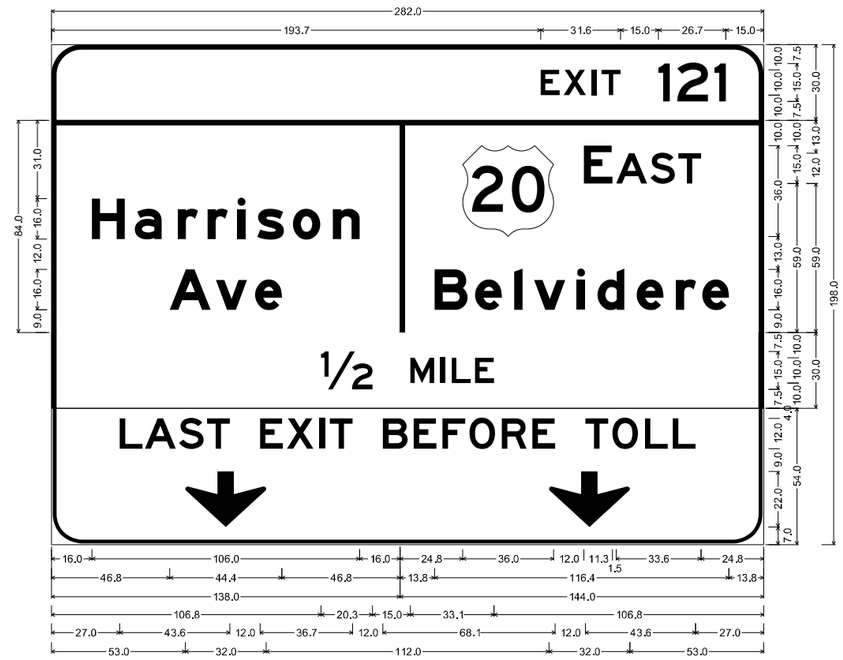

12.0" Radius, 2.0" Border, White on Green;
"EXIT", E 2K 120% spacing; " 121", E 2K;

12.0" Radius, 2.0" Border, White on Green;
"Harrison", E Mod 2K; "Ave", E Mod 2K;

12.0" Radius, 2.0" Border, White on Green;
"EAST", E 2K; "Belvidere", E Mod 2K;

12.0" Radius, 2.0" Border, White on Green;
"½ MILE", E 2K;

12.0" Radius, 1.5" Border, 0.5" Indent, Black on Fluorescent Yellow;
"LAST EXIT BEFORE TOLL", E 2K; Down Arrow 22.0" 270°; Down Arrow 22.0" 270°;
Table of distances between letter and object lefts

193.7	E 9.2	X 11.1	I 3.8	T 22.5	1 7.5	2 14.7	1 4.5	15.0	
16.0	H 17.0	a 17.0	r 11.8	r 11.8	i 7.9	s 14.1	o 15.8	n 10.6	160.0
46.8	A 18.3	v 15.5	e 10.6	190.8					
162.8	● 48.0	E 12.8	A 13.5	S 11.1	T 9.0	24.8			
151.8	B 16.0	e 15.5	l 7.8	v 17.0	i 8.1	d 15.6	e 15.5	r 10.4	e 10.5	13.8
106.8	½ 35.3	M 12.0	I 4.4	L 9.2	E 7.5	106.8						
27.0	L 10.0	A 13.5	S 11.1	T 21.0	E 10.6	X 12.9	I 4.2	T 21.0	B 12.1	E 11.4	F 10.7	O 12.8	R 12.1	E 21.0	T 10.7	O 12.9	L 11.0	L 9.0	27.0						
53.0	↓ 144.0	↓ 32.0	53.0																						

MODEL: PMK-25 [Sheet]
FILE NAME: pw://beresch-pw.bentley.com:beresch-pw-01/Documents/108009.10800.01/Eng_Docs/CAD_Sheets/Pvmt_mkg_sign/Mainline and Ramps [Quigg]/D264C24-Sh-PR Signing Mainline.dgn

QUIGG ENGINEERING INC

USER NAME = mwilson	DESIGNED - MW	REVISED -	
	DRAWN - MW	REVISED -	
PLOT SCALE = 0.16666633 ' / in.	CHECKED - FBN	REVISED -	
PLOT DATE = 2/11/2025	DATE - 02/14/2025	REVISED -	

STATE OF ILLINOIS
DEPARTMENT OF TRANSPORTATION

PROPOSED SIGNING
SIGN PANEL DETAILS

SCALE: | SHEET 24 OF 28 SHEETS | STA. | TO STA.

F.A.I. RTE.	SECTION	COUNTY	TOTAL SHEETS	SHEET NO.
39	(201-3)R & (4-1.5)R	WINNEBAGO	1685	424

CONTRACT NO. 64C24

ILLINOIS | FED. AID PROJECT

* FAI ROUTE 39 (I-39) & FAP 301 (US 20)

I-39/US-20 2673+00

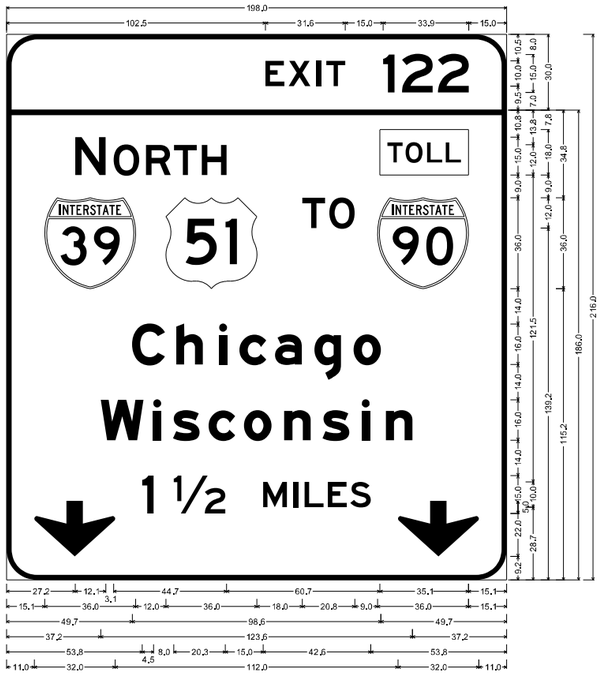

12.0" Radius, 2.0" Border, White on Green:
"EXIT", E 2K 120% spacing; " 122", E 2K;

12.0" Radius, 2.0" Border, White on Green:
"NORTH", E 2K; Rectangle Fluorescent Yellow;
"TO", E 2K; "Chicago", E Mod 2K; "Wisconsin", E Mod 2K; "1 ½ MILES", E 2K; Down Arrow 22.0" 270°;
Down Arrow 22.0" 270°;

Table of letter and object lefts

E 102.5	X 111.7	I 122.8	T 126.6	1 149.1	2 156.6	2 170.9	
N 27.2	O 42.4	R 55.3	T 66.3	H 77.3	■ 147.8		
● 15.1	■ 63.1	T 117.1	O 127.8	● 146.9			
C 49.7	h 67.2	i 84.1	c 92.3	a 106.4	g 121.9	o 137.4	
W 37.2	I 58.0	s 65.9	c 80.0	o 94.0	n 109.9	s 125.1	I 140.6	n 150.2
1 53.8	½ 66.3	M 101.6	I 113.6	L 118.0	E 127.2	S 136.1	
↓ 11.0	↓ 155.0						

I-39/US-20 2679+00

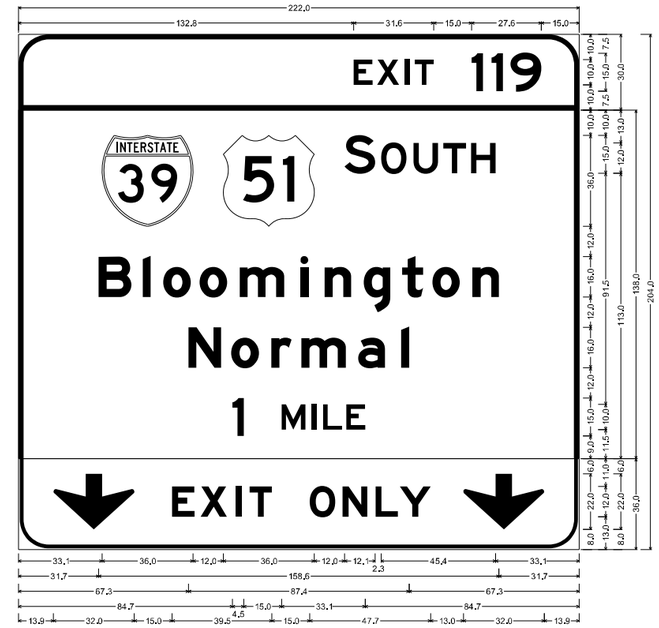

12.0" Radius, 2.0" Border, White on Green:
"EXIT", E 2K 120% spacing; " 119", E 2K;

12.0" Radius, 2.0" Border, White on Green:
"SOUTH", E 2K; "Bloomington", E Mod 2K; "Normal", E Mod 2K; "1 MILE", E 2K;

12.0" Radius, 1.5" Border, 0.5" Indent, Black on Fluorescent Yellow:
Down Arrow 22.0" 270°; "EXIT ", E Mod 2K 140% spacing; "ONLY", E Mod 2K; Down Arrow 22.0" 270°;

Table of distances between letter and object lefts

	E 132.8	X 9.2	I 11.1	T 3.8	1 22.5	9 8.0	7.5	12.1	15.0
● 33.1	● 48.0	E 48.2	S 14.4	O 12.9	U 11.7	T 11.1	H 9.7	33.1	
B 31.7	I 17.5	o 8.1	o 14.4	m 15.9	n 24.0	I 9.6	n 15.5	g 15.2	t 12.0	o 15.2	n 10.6	31.7
N 67.3	o 17.0	r 15.8	m 11.9	a 22.5	I 17.0	3.2	67.3					
I 84.7	M 19.5	I 12.0	L 4.4	E 9.2	7.5	84.7						
↓ 13.9	E 47.0	X 11.2	I 14.0	T 5.4	O 23.9	N 12.9	L 13.1	Y 9.6	25.1	↓ 32.0	13.9	

12.0" Radius, 2.0" Border, White on Green:
"EXIT", E 2K 120% spacing; " 119", E 2K;

12.0" Radius, 2.0" Border, White on Green:
"SOUTH", E 2K; "Bloomington", E Mod 2K; "Normal", E Mod 2K; "1 MILE", E 2K;

12.0" Radius, 1.5" Border, 0.5" Indent, Black on Fluorescent Yellow:
Down Arrow 22.0" 270°; "EXIT ", E Mod 2K 140% spacing; "ONLY", E Mod 2K; Down Arrow 22.0" 270°;

Table of distances between letter and object lefts

	E 132.8	X 9.2	I 11.1	T 3.8	1 22.5	9 8.0	7.5	12.1	15.0
● 33.1	● 48.0	E 48.2	S 14.4	O 12.9	U 11.7	T 11.1	H 9.7	33.1	
B 31.7	I 17.5	o 8.1	o 14.4	m 15.9	n 24.0	I 9.6	n 15.5	g 15.2	t 12.0	o 15.2	n 10.6	31.7
N 67.3	o 17.0	r 15.8	m 11.9	a 22.5	I 17.0	3.2	67.3					
I 84.7	M 19.5	I 12.0	L 4.4	E 9.2	7.5	84.7						
↓ 13.9	E 47.0	X 11.2	I 14.0	T 5.4	O 23.9	N 12.9	L 13.1	Y 9.6	25.1	↓ 32.0	13.9	

MODEL: PMK-26 [Sheet]
FILE NAME: pw://beresch-pw.bentley.com:beresch-pw-01/Documents/10800s/10800.01/Eng_Docs/CAD_Sheets/Pvmt_mkg_sign/Mainline and Ramps [Quigg]/D264C24-Sh-PR Signing Mainline.dgn

QUIGG ENGINEERING INC	USER NAME = mwilson	DESIGNED - MW	REVISED -	STATE OF ILLINOIS DEPARTMENT OF TRANSPORTATION	PROPOSED SIGNING SIGN PANEL DETAILS
		DRAWN - MW	REVISED -		
	PLOT SCALE = 0.16666633 ' / in.	CHECKED - FBN	REVISED -		
	PLOT DATE = 2/11/2025	DATE - 02/14/2025	REVISED -		SCALE: SHEET 25 OF 28 SHEETS STA. TO STA.

F.A.I. RTE.	SECTION	COUNTY	TOTAL SHEETS	SHEET NO.
39	(201-3)R & (4-1.5)R	WINNEBAGO	1685	425
		CONTRACT NO. 64C24		
		ILLINOIS	FED. AID PROJECT	

* FAI ROUTE 39 (I-39) & FAP 301 (US 20)

I-39/US-20 2699+95

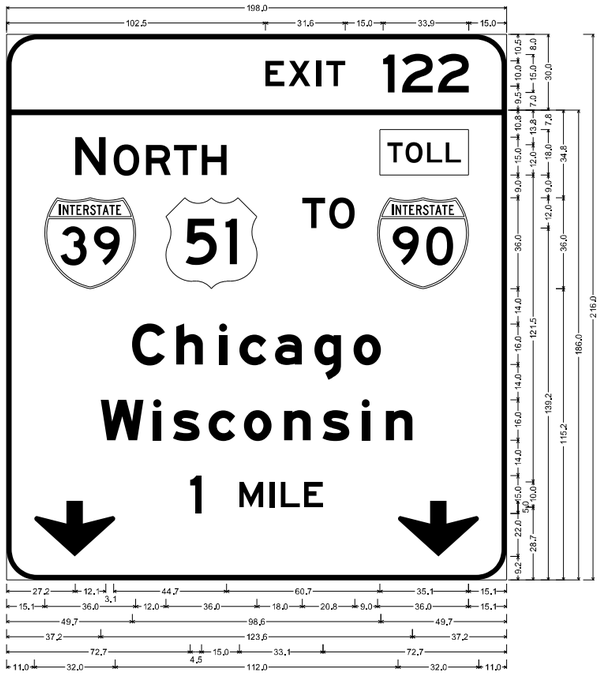

12.0" Radius, 2.0" Border, White on Green;
"EXIT", E 2K 120% spacing; " 122", E 2K;

12.0" Radius, 2.0" Border, White on Green;
"NORTH", E 2K; Rectangle Fluorescent Yellow;
"TO", E 2K; "Chicago", E Mod 2K; "Wisconsin", E Mod 2K; "1 MILE", E 2K; Down Arrow 22.0" 270°;
Down Arrow 22.0" 270°;

Table of letter and object lefts

E 102.5	X 111.7	I 122.8	T 126.6	1 149.1	2 156.6	2 170.9	
N 27.2	O 42.4	R 55.3	T 66.3	H 77.3	■ 147.8		
● 15.1	■ 63.1	T 117.1	O 127.8	● 146.9			
C 49.7	h 67.2	i 84.1	c 92.3	a 106.4	g 121.9	o 137.4	
W 37.2	I 58.0	s 65.9	c 80.0	o 94.2	n 109.9	s 125.1	I 140.6	n 150.2
1 72.7	M 92.2	I 104.2	L 108.6	E 117.8			
↓ 11.0	↓ 155.0						

I-39/US-20 2699+95

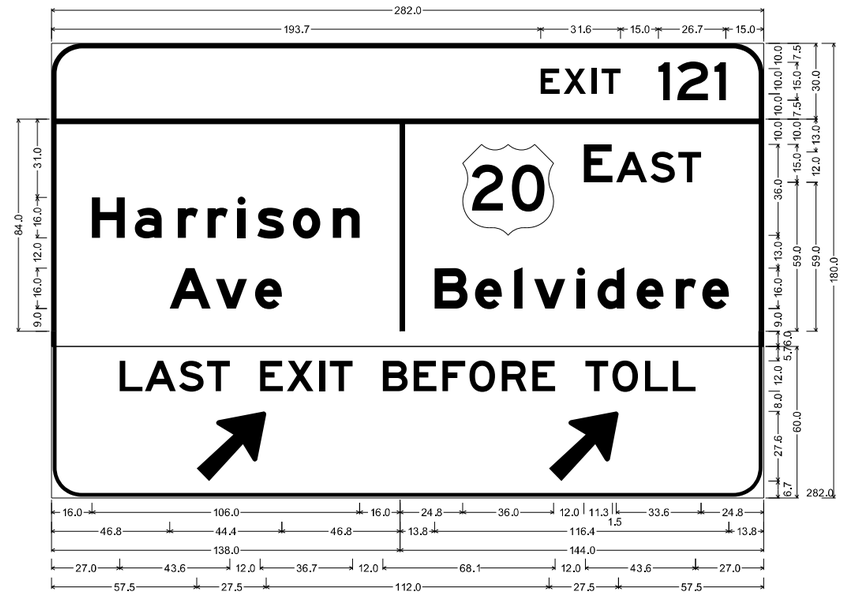

12.0" Radius, 2.0" Border, White on Green;
"EXIT", E 2K 120% spacing; " 121", E 2K;

12.0" Radius, 2.0" Border, White on Green;
"Harrison", E Mod 2K; "Ave", E Mod 2K;

12.0" Radius, 2.0" Border, White on Green;
"EAST", E 2K; "Belvidere", E Mod 2K;

12.0" Radius, 2.0" Border, White on Green;

12.0" Radius, 1.5" Border, 0.5" Indent, Black on Fluorescent Yellow;
"LAST EXIT BEFORE TOLL", E 2K; Arrow 160 - 35.0" 45°; Arrow 160 - 35.0" 45°;

Table of distances between letter and object lefts

193.7	E 9.2	X 11.1	I 3.8	T 22.5	1 7.5	2 14.7	1 4.5	15.0																
16.0	H 17.0	a 17.0	r 11.8	r 11.8	I 7.9	s 14.1	o 15.8	n 10.6	160.0															
46.8	A 18.3	v 15.5	e 10.6	190.8																				
162.8	■ 48.0	E 12.8	A 13.5	S 11.1	T 9.0	24.8																		
151.8	B 16.0	e 15.5	I 7.8	v 17.0	i 8.1	d 15.6	e 15.5	r 10.4	e 10.5	13.8														
27.0	L 10.0	A 13.5	S 11.1	T 21.0	E 10.6	X 12.9	I 4.2	T 21.0	B 12.1	E 11.4	F 10.7	O 12.8	R 12.1	E 21.0	T 10.7	O 12.9	L 11.0	L 9.0	27.0					
57.5	↗ 139.5	↗ 27.5	57.5																					

MODEL: PMK-27 [Sheet]
FILE NAME: pw://beresch-pw.bentley.com:beresch-pw-01/Documents/10800s/10800.01/Eng_Docs/CAD_Sheets/Pvmt_mrks_sign/Mainline and Ramps [Quigg]/D264C24-Sh-PR Signing Mainline.dgn

QUIGG ENGINEERING INC

USER NAME = mwilson	DESIGNED - MW	REVISED -	
	DRAWN - MW	REVISED -	
PLOT SCALE = 0.16666633 ' / in.	CHECKED - FBN	REVISED -	
PLOT DATE = 2/11/2025	DATE - 02/14/2025	REVISED -	

STATE OF ILLINOIS
DEPARTMENT OF TRANSPORTATION

PROPOSED SIGNING
SIGN PANEL DETAILS

SCALE: | SHEET 26 OF 28 SHEETS | STA. | TO STA.

F.A.I. RTE.	SECTION	COUNTY	TOTAL SHEETS	SHEET NO.
39	(201-3)R & (4-1.5)R	WINNEBAGO	1685	426

CONTRACT NO. 64C24

ILLINOIS | FED. AID PROJECT

* FAI ROUTE 39 (I-39) & FAP 301 (US 20)

I-39/US-20 2680+00

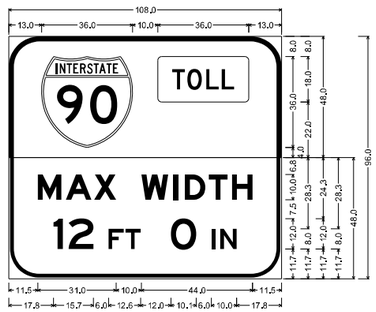

12.0" Radius, 2.0" Border, White on Green;
Rounded Rectangle 1.5" Radius Fluorescent Yellow;

12.0" Radius, 1.5" Border, 0.5" Indent, Black on Fluorescent Yellow;
"MAX WIDTH", E Mod 2K; "12 FT 0 IN", E 2K;
Table of letter and object lefts

● 13.0	▬ 59.0

M 11.5	A 22.6	X 33.8	W 52.5	I 64.9	D 69.7	T 79.2	H 88.4
1 17.8	2 23.8	F 39.5	T 46.1	O 64.1	I 80.2	N 83.7	

I-39/US-20 2664+00 & 2667+73

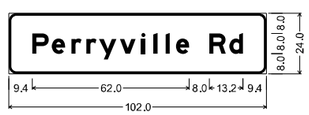

3.0" Radius, 1.0" Border, White on Green;
"Perryville Rd", E Mod 2K;
Table of widths and spaces

9.4	P 6.4	1.2	e 5.3	2.5	r 4.0	1.9	r 4.0	1.1	y 6.8	1.4	v 6.2	2.3	l 1.6	3.2	l 1.6	3.2	l 1.6	2.5	e 5.2
8.0	R 6.5	1.5	d 5.2	9.4															

I-39/US-20 2707+00

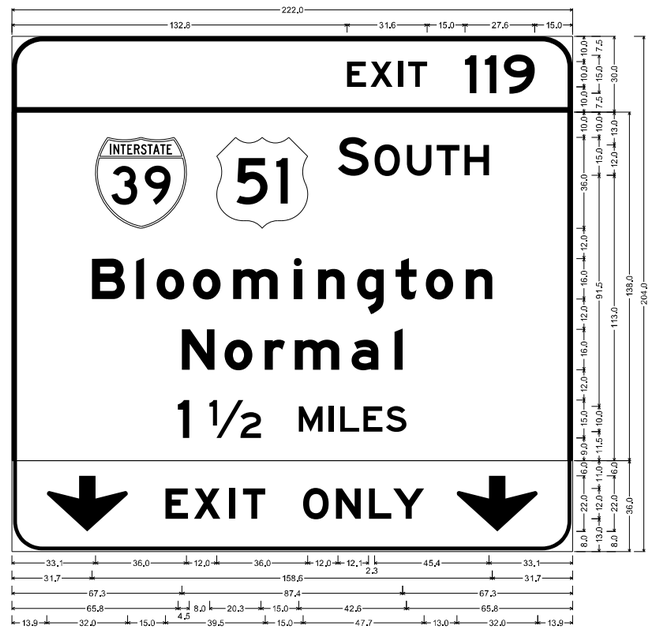

12.0" Radius, 2.0" Border, White on Green;
"EXIT", E 2K 120% spacing; " 119", E 2K;

12.0" Radius, 2.0" Border, White on Green;
"SOUTH", E 2K; "Bloomington", E Mod 2K; "Normal", E Mod 2K; "1 1/2 MILES", E 2K;

12.0" Radius, 1.5" Border, 0.5" Indent, Black on Fluorescent Yellow;
Down Arrow 22.0" 270°; "EXIT ", E Mod 2K 140% spacing; "ONLY", E Mod 2K; Down Arrow 22.0" 270°;
Table of distances between letter and object lefts

132.8	E 9.2	X 11.1	I 3.8	T 22.5	1 8.0	1 7.5	9 12.1	15.0	
33.1	● 48.0	● 48.0	S 14.4	O 12.9	U 11.7	T 11.1	H 9.7	33.1	
31.7	B 17.5	l 8.1	o 14.4	o 15.9	m 24.0	l 9.6	n 15.5	q 15.2	t 12.0	o 15.8	n 10.6	31.7
67.3	N 17.0	o 15.8	r 11.9	m 22.5	a 17.0	l 3.2	67.3					
65.8	1 12.5	1/2 35.3	M 12.0	I 4.4	L 9.2	E 8.9	S 8.1	65.8				
13.9	↓ 47.0	E 11.2	X 14.0	I 5.4	T 23.9	O 12.9	N 13.1	L 9.6	Y 25.1	↓ 32.0	13.9		

I-39/US-20 2719+25

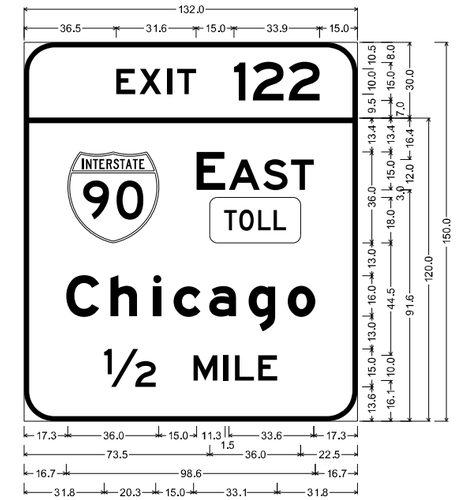

12.0" Radius, 2.0" Border, White on Green;
"EXIT", E 2K 120% spacing; " 122", E 2K;

12.0" Radius, 2.0" Border, White on Green;
"EAST", E 2K; Rounded Rectangle 3.0" Radius Yellow;
"Chicago", E Mod 2K; "1/2 MILE", E 2K;
Table of widths and spaces

36.5	E 7.5	1.7	X 8.7	2.4	I 1.8	2.0	T 7.5	15.0	1 4.5	3.0	2 12.2	2.1	2 12.1	15.0			
17.3	● 36.0	15.0	E 11.3	1.5	A 12.2	1.3	S 9.7	1.4	T 9.0	17.3							
73.5	▬ 36.0	22.5															
16.7	C 13.0	4.5	h 10.5	6.4	i 3.2	5.0	c 10.5	3.6	a 10.5	5.0	g 10.5	5.0	o 10.9	16.7			
31.8	1/2 20.3	15.0	M 9.4	2.6	I 1.8	2.6	L 7.5	1.7	E 7.5	31.8							

I-39/US-20 2746+00

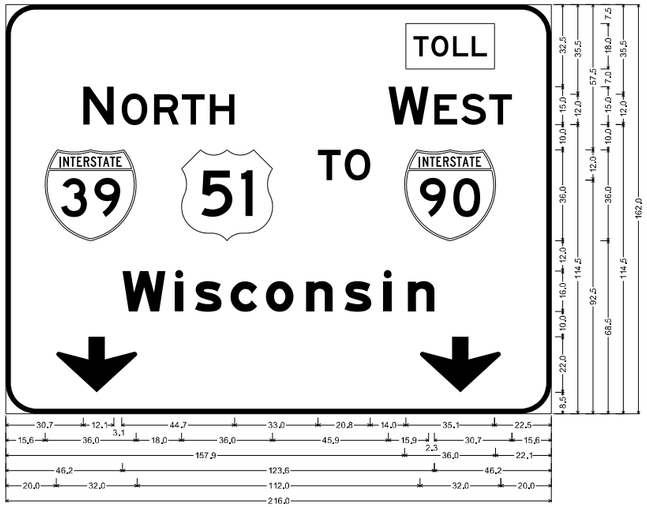

12.0" Radius, 2.0" Border, White on Green;
" ", E 2K; "NORTH", E 2K; " ", E 2K; " ", E 2K; "TO", E 2K; Rectangle Fluorescent Yellow;
"WEST", E 2K; "Wisconsin", E Mod 2K; Down Arrow 22.0" 270°; Down Arrow 22.0" 270°;

Table of letter and object lefts

▬ 158.4									
N 30.7	O 45.9	R 58.8	T 69.8	H 80.8	W 151.5	E 169.7	S 180.4	T 191.4	
● 15.6	● 69.6	T 123.6	O 134.3	● 157.9					
W 46.2	i 67.0	s 74.9	c 89.0	o 103.0	n 118.9	s 134.1	i 149.6	n 159.2	
↓ 20.0	↓ 164.0								

I-39/US-20 2746+00

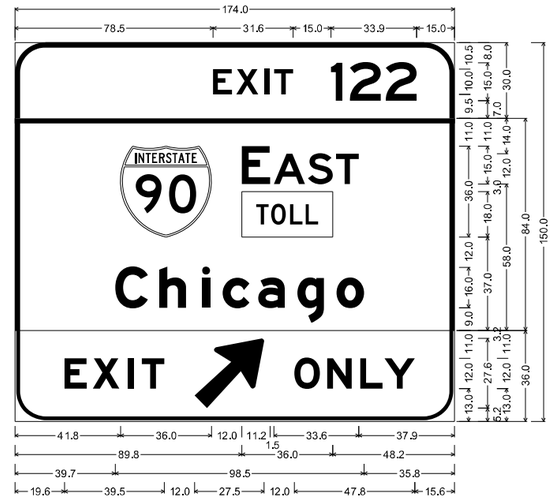

12.0" Radius, 2.0" Border, White on Green;
"EXIT", E 2K 120% spacing; " 122", E 2K;

12.0" Radius, 2.0" Border, White on Green;
"EAST", E 2K; Rectangle Fluorescent Yellow;
"Chicago", E Mod 2K;

12.0" Radius, 1.5" Border, 0.5" Indent, Black on Fluorescent Yellow;
"EXIT", E Mod 2K 140% spacing; Arrow 160 - 35.0" 45°; "ONLY", E Mod 2K;

Table of distances between letter and object lefts

78.5	E 9.2	X 11.1	I 3.8	T 22.5	1 7.5	2 14.3	2 12.1	15.0	
41.8	● 48.0	E 12.7	A 13.6	S 11.0	T 9.0	37.9			
89.8	▬ 36.0	48.2							
39.7	C 17.4	h 17.0	i 8.1	c 14.1	a 15.5	g 15.5	o 10.9	35.8	
19.6	E 11.2	X 14.0	I 5.4	T 20.9	↗ 39.5	O 13.0	N 13.1	L 9.6	Y 12.1	15.6

I-39/US-20 2750+34

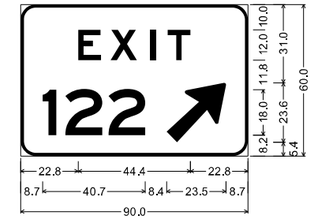

6.0" Radius, 1.3" Border, White on Green;
"EXIT", E 2K 225% spacing;
"122", E 2K; Arrow 133 - 30.0" 45°;

Table of letter and object lefts

E 22.8	X 35.6	I 51.4	T 58.2
1 8.7	2 17.7	2 34.8	↗ 57.8

HARRISON AVE 152+25

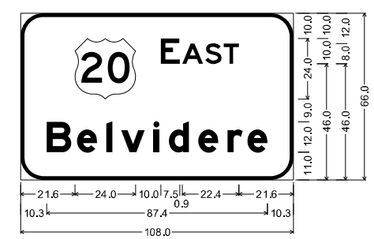

9.0" Radius, 1.5" Border, White on Green;
"EAST", E 2K; "Belvidere", E Mod 2K;

Table of distances between letter and object lefts

21.6	● 34.0	E 8.4	A 9.1	S 7.3	T 6.0	21.6				
10.3	B 12.0	e 11.7	l 5.8	v 12.8	i 6.1	d 11.6	e 11.7	r 7.8	e 7.9	10.3

MODEL: PMK-29 [Sheet]
FILE NAME: pw://benesch-pw.bentley.com:benesch-pw-01/Documents/108095/108600.01/Eng_Docs/CAD_Sheets/Pvmt_mrks_sign/Mainline and Ramps [Quigg]/D254C24-SH-PR Signing Mainline.dgn

QUIGG ENGINEERING INC	USER NAME = mwilson	DESIGNED - MW	REVISED -	STATE OF ILLINOIS DEPARTMENT OF TRANSPORTATION	PROPOSED SIGNING SIGN PANEL DETAILS	F.A.I. RTE.	SECTION	COUNTY	TOTAL SHEETS	SHEET NO.
		DRAWN - MW	REVISED -			39	(201-3)R & (4-1.5)R	WINNEBAGO	1685	428
	PLOT SCALE = 0.16666633 ' / in.	CHECKED - FBN	REVISED -					CONTRACT NO. 64C24		
	PLOT DATE = 2/11/2025	DATE - 02/14/2025	REVISED -		SCALE: SHEET 28 OF 28 SHEETS STA. TO STA.		ILLINOIS	FED. AID PROJECT		

* FAI ROUTE 39 (I-39) & FAP 301 (US 20)

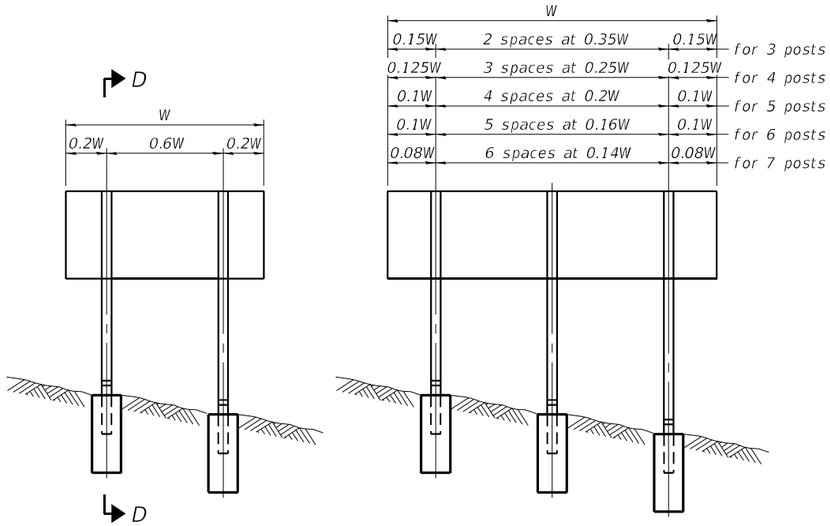

ELEVATION

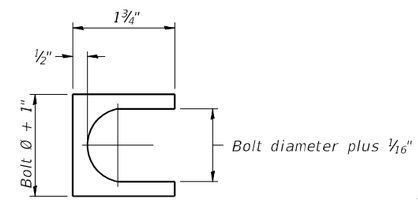

SHIM DETAIL

Furnish two 0.01" thick and two 0.03" thick stainless steel or brass (ASTM B36) shims per post.

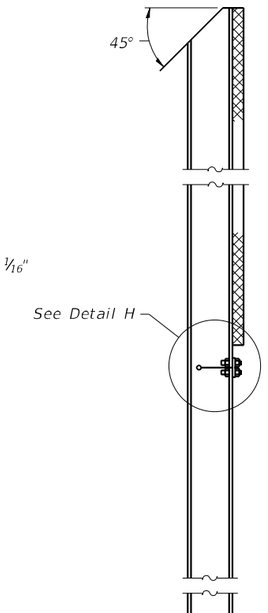

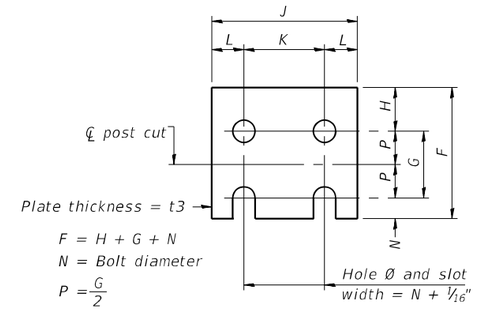

FUSE PLATE DATA		
N = Bolt Diameter	G	H
½"	2"	1⅛"
⅝"	2¼"	1¼"
¾"	2½"	1⅜"
⅞"	2¾"	1½"
1"	3"	1⅝"
1⅛"	3¼"	1¾"
1¼"	3½"	1⅞"

FUSE PLATE DETAIL

(Install with notches down.)

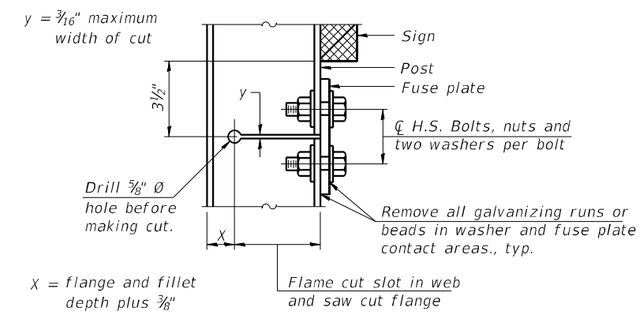

DETAIL H

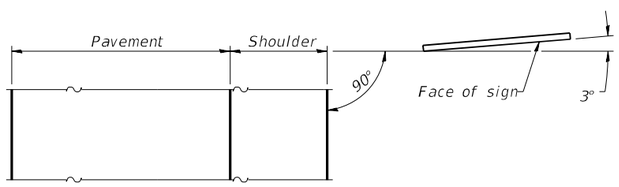

LOCATION SKETCH

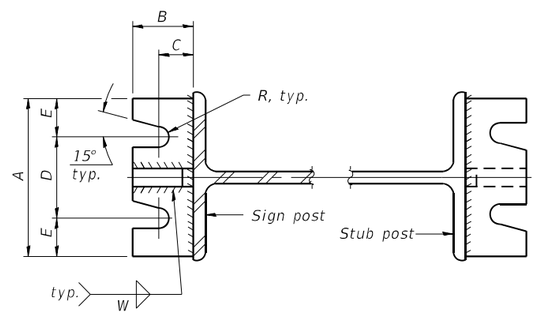

SECTION A-A

SECTION B-B

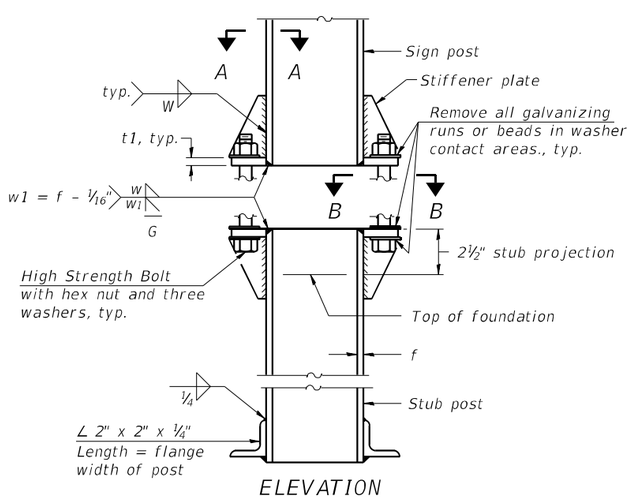

ELEVATION

SIGN POST & STUB POST

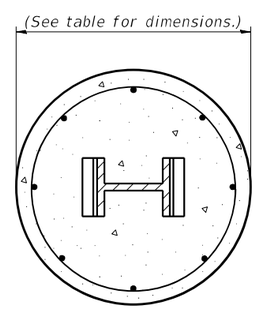

SECTION C-C

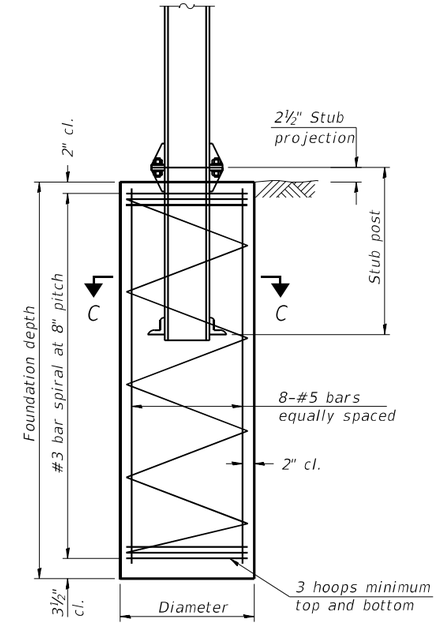

SECTION D-D

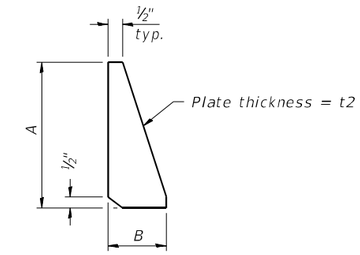

STIFFENER PLATE DETAIL

Diameter

GENERAL NOTES

Posts shall be plumbed by using shims with post-to-stub post connection bolts snug tight only. Final tightening of all High Strength Bolts shall be in accordance with Article 727.05 and threads at the junction of the bolt and nut shall be burred or center punched to prevent the nut from loosening.

LOADING: 80 m.p.h. wind with 30% gust factor, normal to sign.

DESIGN STRESSES:
Structural steel - 20,000 p.s.i.
Reinforcing steel - 20,000 p.s.i.
Concrete - 1,400 p.s.i.
Footing soil pressure - 2,000 p.s.f.

After fabrication, the post, fuse plate and upper 6", min. of the stub post shall be hot-dip galvanized in accordance with AASHTO M111. All bolts, nuts and washers shall be hot-dip galvanized in accordance with AASHTO M232.

Work this sheet with Base Sheet BAW-A-2.

BAW-A-1 2-17-2017

(Sheet 1 of 2)

QUIGG ENGINEERING INC

USER NAME = JCray	DESIGNED - ZLD	REVISED -	
D264C24-SHT-001-BAW Sign Post	CHECKED - KWB	REVISED -	
PLOT SCALE = 0.1667 ' / in.	DRAWN - ZLD	REVISED -	
PLOT DATE = 2/10/2025	CHECKED - MDC	REVISED -	

STATE OF ILLINOIS
DEPARTMENT OF TRANSPORTATION

BREAK-AWAY WIDE FLANGE STEEL SIGN POST DETAILS

SHEET 1 OF 2 SHEETS

F.A.I. RTE.	SECTION	COUNTY	TOTAL SHEETS	SHEET NO.
39	(201-3)R & (4-1.5)R	WINNEBAGO	1685	429
		CONTRACT NO. 64C24		
		ILLINOIS FED. AID PROJECT		

MODEL: Default
FILE NAME: pw:\\benesch-pw.bentley.com:benesch-pw-01\Documents\110800s\110800.00\Eng_Docs\CAD_Sheets\Sign Structures [Quigg]\Mainline\D264C24-SHT-001-BAW Sign Post
2/7/2025 3:31:03 PM

POST	CONCRETE FOUNDATION TABLE								POST TO STUB POST CONNECTION DATA										FUSE PLATE DATA			
	Foundation			Reinforcement				Stub Post														
	Diameter	* Minimum Depth	Concrete (1) cu. yds.)	Vertical Bars Length	Bar Spirals Diameter	Bar Spirals Length	lbs. (2)	Length	Bolt Size	A	B	C	D	E	t1	t2	R	W	J	K	L	t3
W6x9	2'-0"	6'-0"	0.70	5'-9"	1'-8½"	79'-0"	78	2'-3"	⅝" x 3¼"	6"	2¼"	1¼"	3½"	1¼"	¾"	½"	11/32"	¼"	4"	2¼"	⅞"	¼"
W6x15	2'-0"	6'-0"	0.70	5'-9"	1'-8½"	79'-0"	78	2'-6"	⅝" x 3¼"	6"	2¼"	1¼"	3½"	1¼"	¾"	½"	11/32"	¼"	6"	3½"	1¼"	⅜"
W8x18	2'-0"	6'-0"	0.70	5'-9"	1'-8½"	79'-0"	78	2'-6"	¾" x 3¾"	6"	2½"	1⅜"	3¼"	1⅜"	1"	½"	13/32"	5/16"	5¼"	2¾"	1¼"	⅜"
W10x22	2'-6"	6'-6"	1.18	6'-3"	2'-2½"	105'-0"	92	3'-0"	¾" x 3¾"	6"	2½"	1⅜"	3¼"	1⅜"	1"	½"	13/32"	5/16"	5¾"	2¾"	1½"	½"
W10x26	2'-6"	7'-0"	1.27	6'-9"	2'-2½"	112'-0"	98	3'-0"	⅞" x 4"	7"	2¾"	1½"	4"	1½"	1"	¾"	15/32"	⅜"	5¾"	2¾"	1½"	⅝"
W12x26	2'-6"	7'-9"	1.41	7'-6"	2'-2½"	119'-0"	107	3'-0"	⅞" x 4"	7"	2¾"	1½"	4"	1½"	1"	¾"	15/32"	⅜"	6½"	3½"	1½"	⅝"
W14x30	3'-0"	7'-3"	1.90	7'-0"	2'-8½"	145'-0"	113	3'-0"	⅞" x 4"	7"	2¾"	1½"	4"	1½"	1"	¾"	15/32"	⅜"	6¾"	3½"	1⅝"	½"
W14x38	3'-0"	8'-0"	2.09	7'-9"	2'-8½"	153'-0"	122	3'-6"	1" x 4½"	7½"	3"	1¾"	4"	1¾"	1¼"	¾"	17/32"	⅜"	6¾"	3½"	1⅝"	½"
W16x45	3'-0"	8'-6"	2.23	8'-3"	2'-8½"	162'-0"	130	3'-6"	1" x 4½"	7½"	3"	1¾"	4"	1¾"	1¼"	¾"	17/32"	⅜"	7"	3½"	1¾"	½"

*Dimensional changes required for varying site conditions shall be approved by the Engineer.

POST	FUSE PLATE BOLT SIZE																				
	Sign Height																				
	4'-0"	5'-0"	6'-0"	7'-0"	8'-0"	9'-0"	10'-0"	11'-0"	12'-0"	13'-0"	14'-0"	15'-0"	16'-0"	17'-0"	18'-0"	19'-0"	20'-0"	21'-0"	22'-0"	23'-0"	24'-0"
W6x9	½" x 1½"	½" x 1½"	½" x 1½"	½" x 1½"	—	—	—	—	—	—	—	—	—	—	—	—	—	—	—	—	—
W6x15	½" x 1¾"	½" x 1¾"	½" x 1¾"	⅝" x 2"	⅝" x 2"	¾" x 2"	¾" x 2"	¾" x 2"	¾" x 2"	—	—	—	—	—	—	—	—	—	—	—	—
W8x18	½" x 1¾"	½" x 1¾"	½" x 1¾"	½" x 1¾"	⅝" x 2"	⅝" x 2"	¾" x 2"	¾" x 2"	¾" x 2"	¾" x 2"	—	—	—	—	—	—	—	—	—	—	—
W10x22	½" x 2"	½" x 2"	½" x 2"	½" x 2"	½" x 2"	⅝" x 2"	⅝" x 2"	¾" x 2¼"	¾" x 2¼"	¾" x 2¼"	¾" x 2¼"	¾" x 2¼"	¾" x 2¼"	—	—	—	—	—	—	—	—
W10x26	½" x 2"	½" x 2"	½" x 2"	½" x 2"	½" x 2"	⅝" x 2¼"	⅝" x 2¼"	¾" x 2½"	¾" x 2½"	¾" x 2½"	¾" x 2½"	¾" x 2½"	¾" x 2½"	¾" x 2½"	—	—	—	—	—	—	—
W12x26	½" x 2"	½" x 2"	½" x 2"	½" x 2"	½" x 2"	⅝" x 2¼"	⅝" x 2¼"	¾" x 2½"	¾" x 2½"	¾" x 2½"	¾" x 2½"	¾" x 2½"	¾" x 2½"	¾" x 2½"	¾" x 2½"	—	—	—	—	—	—
W14x30	½" x 2"	½" x 2"	½" x 2"	½" x 2"	½" x 2"	⅝" x 2"	⅝" x 2"	¾" x 2¼"	¾" x 2¼"	¾" x 2¼"	¾" x 2¼"	¾" x 2¼"	¾" x 2¼"	¾" x 2¼"	¾" x 2¼"	¾" x 2¼"	¾" x 2¼"	—	—	—	—
W14x38	½" x 2"	½" x 2"	½" x 2"	½" x 2"	½" x 2"	⅝" x 2¼"	⅝" x 2¼"	¾" x 2½"	¾" x 2½"	¾" x 2½"	¾" x 2½"	⅞" x 2½"	⅞" x 2½"	1" x 2¾"	1" x 2¾"	1" x 2¾"	1" x 2¾"	1" x 2¾"	1" x 2¾"	1" x 2¾"	1" x 2¾"
W16x45	—	½" x 2"	½" x 2"	½" x 2"	½" x 2"	½" x 2"	½" x 2"	⅝" x 2¼"	⅝" x 2¼"	⅝" x 2¼"	¾" x 2½"	¾" x 2½"	⅞" x 2½"	⅞" x 2½"	⅞" x 2½"	1" x 2¾"	1" x 2¾"	1" x 2¾"	1" x 2¾"	1" x 2¾"	1" x 2¾"

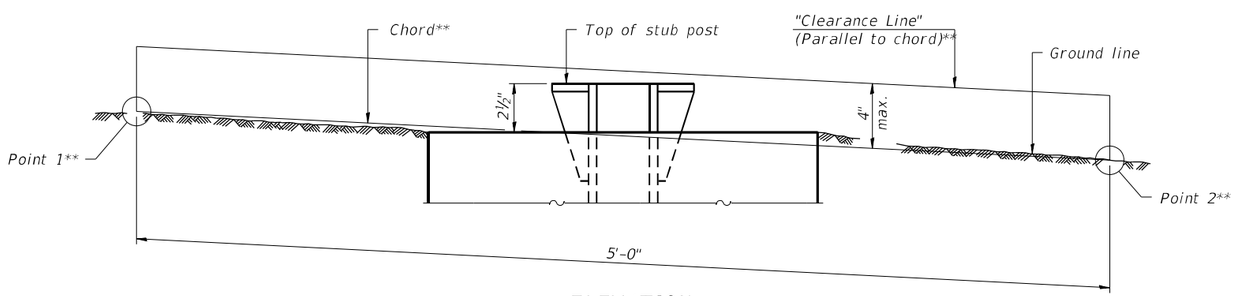

ELEVATION
GROUND LINE & STUB POST

** For all "Point 1" and "Point 2" locations, "Clearance Line" must be at or above top of stub post.

(1) Quantity includes all concrete necessary for one foundation.

(2) Includes reinforcement bars and spiral hooping for one foundation.

BAW-A-2 2-17-2017

(Sheet 2 of 2)

QUIGG ENGINEERING INC

USER NAME = JCray	DESIGNED - ZLD	REVISED -	
D264C24-SHT-002-BAW Sign Post	CHECKED - KWB	REVISED -	
PLOT SCALE = 0.1667 ' / in.	DRAWN - ZLD	REVISED -	
PLOT DATE = 2/10/2025	CHECKED - MDC	REVISED -	

STATE OF ILLINOIS
DEPARTMENT OF TRANSPORTATION

BREAK-AWAY WIDE FLANGE
STEEL SIGN POST TABLES

SHEET 2 OF 2 SHEETS

F.A.I. RTE.	SECTION	COUNTY	TOTAL SHEETS	SHEET NO.
39	(201-3)R & (4-1.5)R	WINNEBAGO	1685	430
		CONTRACT NO. 64C24		
		ILLINOIS	FED. AID PROJECT	

MODEL: Default
FILE NAME: pw:\\benesch-pw.bentley.com:benesch-pw-01\Documents\10800s\10800.00\Eng_Docs\CAD_Sheets\Sign Structures [Quigg]\Mainline\D264C24-SHT-002-BAW Sign Post
2/7/2025 3:31:33 PM

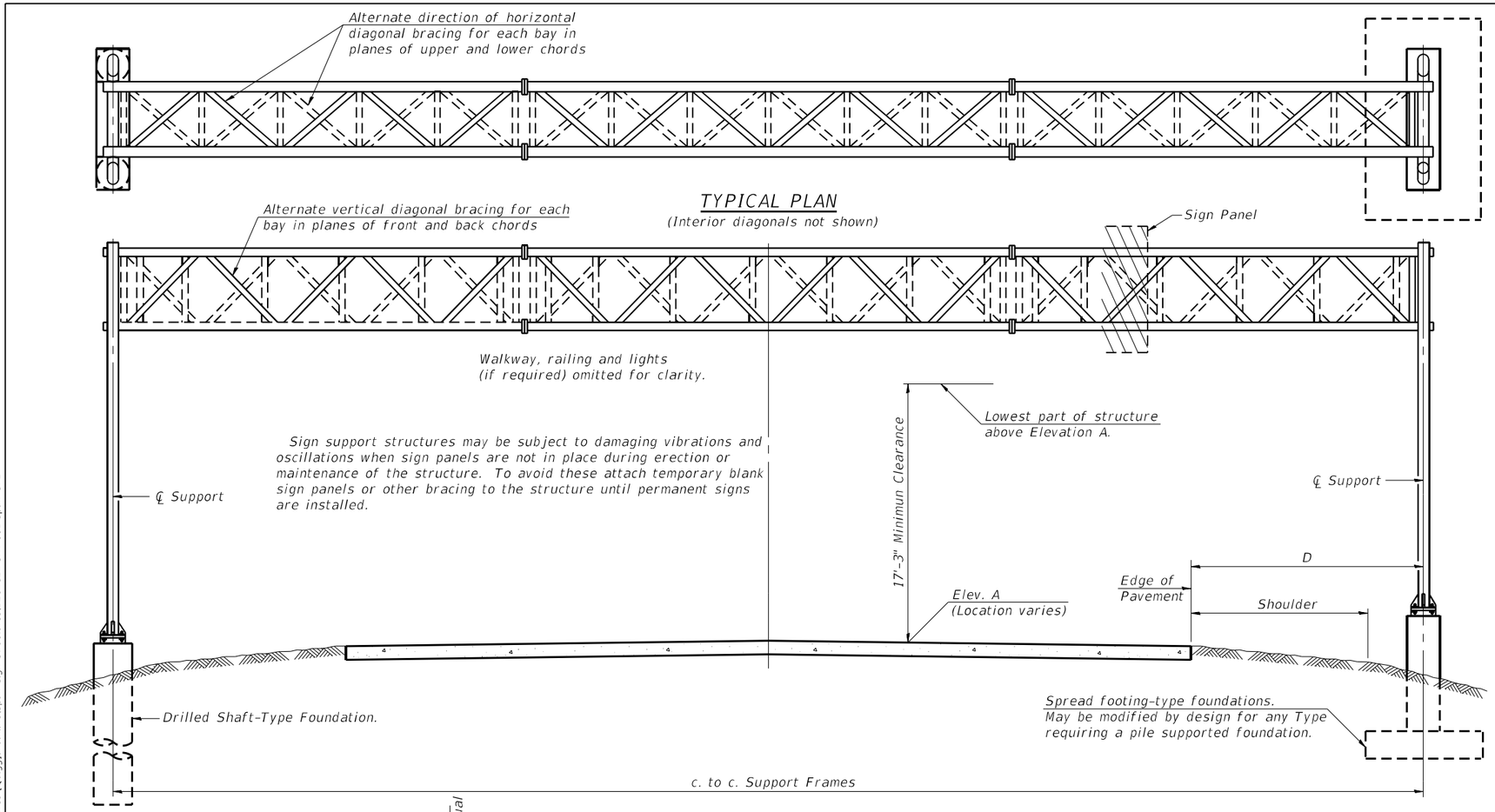

TYPICAL PLAN

(Interior diagonals not shown)

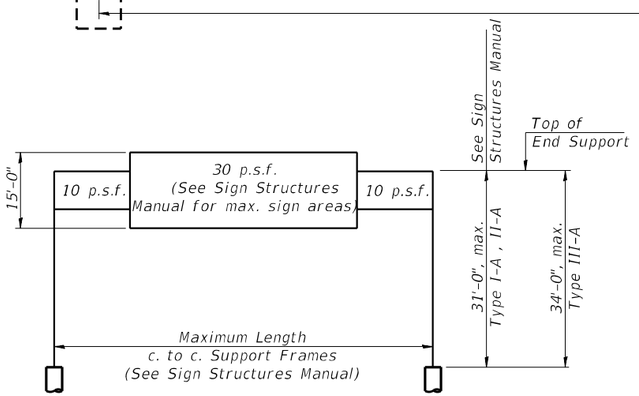

DESIGN WIND LOADING DIAGRAM

Parameters shown are basis for I.D.O.T. Standards and Sign Manual Tables. Installations not within dimensional limits shown require special analysis for all components.

TYPICAL ELEVATION

(Looking at Face of Signs**)

Elev. A = Elevation at point of minimum clearance to sign, walkway support or truss.

Structure Number	Station	Design Truss Type	c. to c. Supports	Elev. A	Dim. D	Height of Tallest Sign	Total Sign Area
2S101I039L120.1	2630+80	II-A	110'-0"	794.48	48'-6"	15'-0"	443 SF
2S101I039R120.4	2644+50	II-A	90'-0"	801.59	28'-6"	18'-0"	685 SF
2S101I039L120.6	2657+00	I-A	90'-0"	791.99	28'-6"	17'-0"	480 SF
2S101I039R120.9	2673+00	II-A	120'-0"	791.08	58'-6"	18'-0"	685 SF
2S101I039L121.0	2679+00	I-A	90'-0"	795.58	28'-6"	17'-0"	480 SF
2S101I039L121.2	2686+50	III-A	90'-0"	794.69	28'-6"	9'-0"	243 SF
2S101I039R121.4	2699+95	II-A	110'-0"	768.79	48'-6"	18'-0"	650 SF
2S101I039L121.6	2707+00	I-A	100'-0"	764.31	36'-0"	17'-0"	480 SF

**Looking upstation for structures with signs both sides.

* If M270 Gr. 50W (M222) steel is proposed, chemistry for plate to be used shall first be approved by the Engineer as suitable for galvanizing and welding.

GENERAL NOTES

DESIGN: AASHTO Standard Specifications for Structural Supports for Highway Signs, Luminaires and Traffic Signals. ("AASHTO Specifications")

CONSTRUCTION: Current (at time of letting) Illinois Department of Transportation Standard Specifications for Road and Bridge Construction, Supplemental Specifications and Special Provisions. ("Standard Specifications")

LOADING: 90 M.P.H. WIND VELOCITY

WALKWAY LOADING: Dead load plus 500 lbs. concentrated live load.

DESIGN STRESSES:
Field Units
f'c = 3,500 p.s.i.
fy = 60,000 p.s.i. (reinforcement)

WELDING: All welds to be continuous unless otherwise shown. All welding to be done in accordance with current AWS D1.1 and D1.2 Structural Welding Codes (Steel and Aluminum) and the Standard Specificiations.

MATERIALS: Aluminum Alloys as shown throughout plans. All Structural Steel Pipe shall be ASTM A53 Grade B or A500 Grade B or C. If A500 pipe is substituted for A53, then the outside diameter shall be as detailed and wall thickness greater than or equal to A53. All Structural Steel Plates and Shapes shall conform to AASHTO M270 Gr. 36, Gr. 50 or Gr. 50W*. Stainless steel for shims, sleeves and handhole covers shall be ASTM A240, Type 302 or 304, or another alloy suitable for exterior exposure and acceptable to the Engineer.
The steel pipe and stiffening ribs at the base plate for the column shall have a minimum longitudinal Charpy V-Notch (CVN) energy of 15 lb.-ft. at 40° F. (Zone 2) before galvanizing.

FASTENERS FOR ALUMINUM TRUSSES: All bolts noted as "high strength" must satisfy the requirements of AASHTO M164 (ASTM A325), or approved alternate, and must have matching lock nuts. Threaded studs for splices (if Members interfere) must satisfy the requirements of ASTM A449, ASTM A193, Grade B7, or approved alternate, and must have matching lock nuts. Bolts and lock nuts not required to be high strength must satisfy the requirements of ASTM A307. All bolts and lock nuts must be hot dip galvanized per AASHTO M232. The lock nuts must have nylon or steel inserts. A stainless steel flat washer conforming to ASTM A240 Type 302 or 304, is required under both head and nut or under both nuts where threaded studs are used. High strength bolt installation shall conform to Article 505.04 (f) (2)d of the IDOT Standard Specifications for Road and Bridge Construction. Rotational capacity ("ROCAP") testing of bolts will not be required.

U-BOLTS AND EYEBOLTS: U-Bolts and Eyebolts must be produced from ASTM A276 Type 304, 304L, 316 or 316L, Condition A, cold finished stainless steel, or an equivalent material acceptable to the Engineer. All nuts for U-Bolts and Eyebolts must be lock nuts equivalent to ASTM A307 with nylon or steel inserts and hot dip galvanized per AASHTO M232. A stainless steel flat washer conforming to ASTM A240, Type 302 or 304, is required under each U-Bolt and Eyebolt lock nut.

GALVANIZING: All Steel Grating, Plates, Shapes and Pipe shall be Hot Dip Galvanized after fabrication in accordance with AASHTO M111. Painting is not permitted.

ANCHOR RODS: Shall conform to ASTM F1554 Gr. 105.

CONCRETE SURFACES: All concrete surfaces above an elevation 6" below the lowest final ground line at each foundation shall be cleaned and coated with Concrete Sealer in accordance with the Standard Specifications.

REINFORCEMENT BARS: Reinforcement Bars designated (E) shall be epoxy coated in accordance with the Standard Specifications.

FOUNDATIONS: The contract unit price for Concrete Foundations and Drilled Shaft Concrete Foundations shall include reinforcement bars complete in place.

TOTAL BILL OF MATERIAL

ITEM	UNIT	TOTAL
OVERHEAD SIGN STRUCTURE SPAN TYPE I-A	Foot	280
OVERHEAD SIGN STRUCTURE SPAN TYPE II-A	Foot	430
OVERHEAD SIGN STRUCTURE SPAN TYPE III-A	Foot	90
OVERHEAD SIGN STRUCTURE WALKWAY TYPE A	Foot	14.5
CONCRETE FOUNDATIONS	Cu. Yds	-
DRILLED SHAFT CONCRETE FOUNDATIONS	Cu. Yds	263.5
ROCK EXCAVATION FOR STRUCTURES	Cu. Yds	10

OS-A-1 2-17-2017

QUIGG ENGINEERING INC

USER NAME = ZDavidson	DESIGNED - ZLD	REVISED -	
D264C24-SHT-001-Span GPE	CHECKED - KWB	REVISED -	
PLOT SCALE = 0.1667 ' / in.	DRAWN - ZLD	REVISED -	
PLOT DATE = 2/10/2025	CHECKED - MDC	REVISED -	

STATE OF ILLINOIS
DEPARTMENT OF TRANSPORTATION

OVERHEAD SIGN STRUCTURES - GENERAL PLAN & ELEVATION - ALUMINUM TRUSS & STEEL SUPPORTS

SHEET 1 OF 25 SHEETS

F.A.I. RTE.	SECTION	COUNTY	TOTAL SHEETS	SHEET NO.
39	(201-3)R & (4-1.5)R	WINNEBAGO	1685	431

CONTRACT NO. 64C24

ILLINOIS | FED. AID PROJECT

MODEL: Default
FILE NAME: pw:\\bdenes:ch-pw.bentley.com:bdenesch-pw-01\Documents\10800s\10800s.00\Eng_Docs\CAD_Sheets\Sign Structures [Quigg]\Mainline\Span Sign Structures\D264C24-SHT-001-Span GPE

5/2/2025 11:15:46 AM

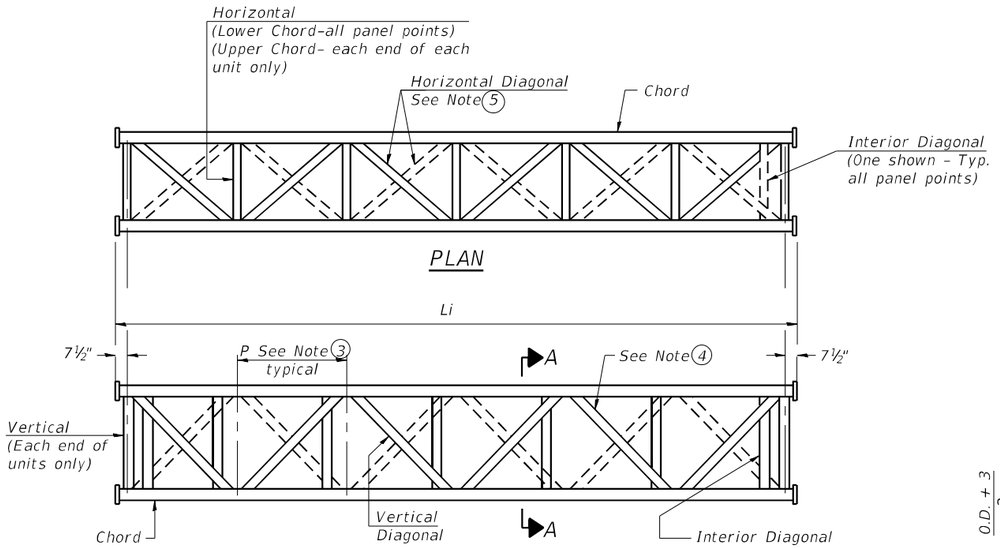

ELEVATION
TYPICAL INTERIOR UNIT
Even number of panels/interior unit required.

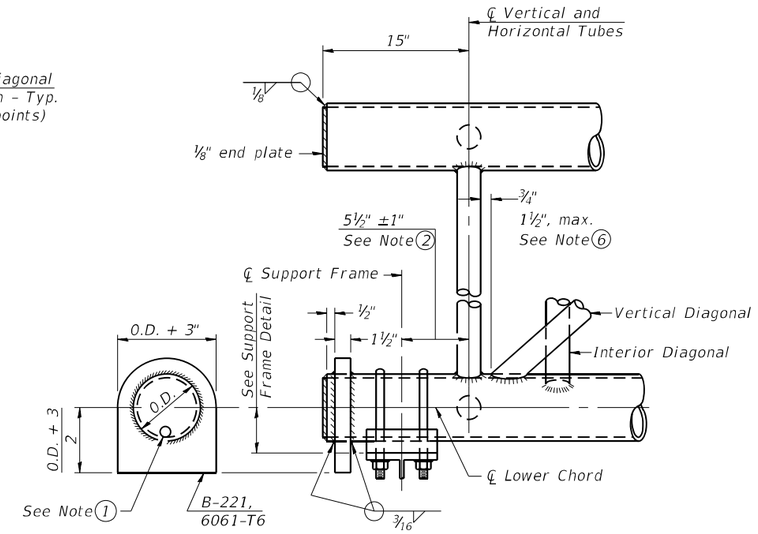

SUPPORT END DETAIL FOR EXTERIOR UNIT

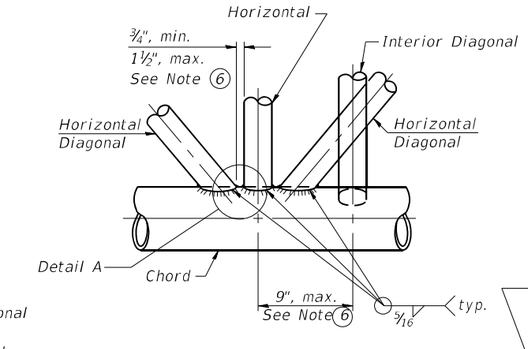

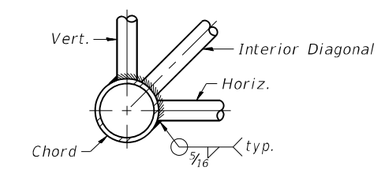

TYPICAL JOINT DETAILS

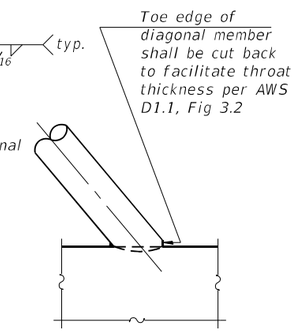

DETAIL A

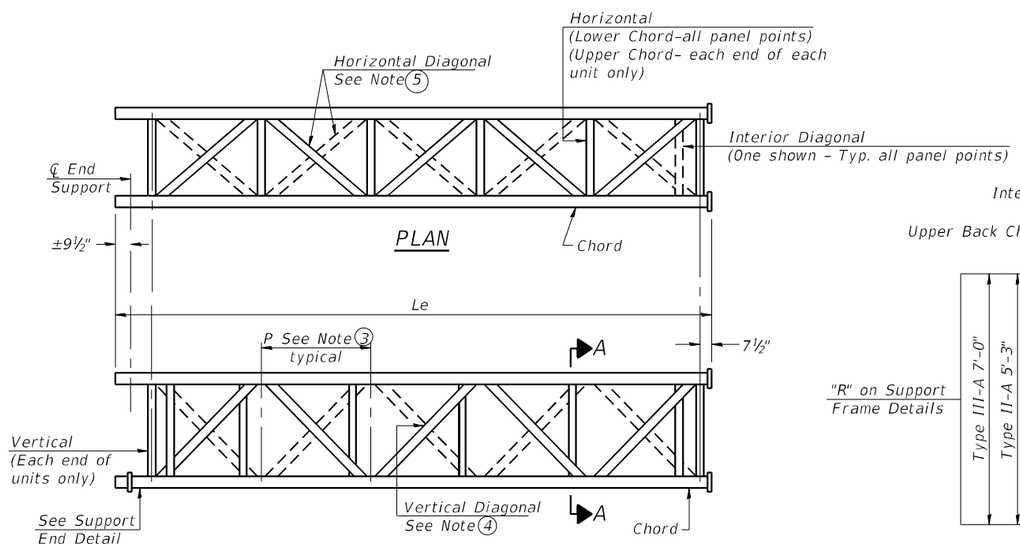

ELEVATION
TYPICAL EXTERIOR UNIT
Even or odd number of panels/exterior units allowed.

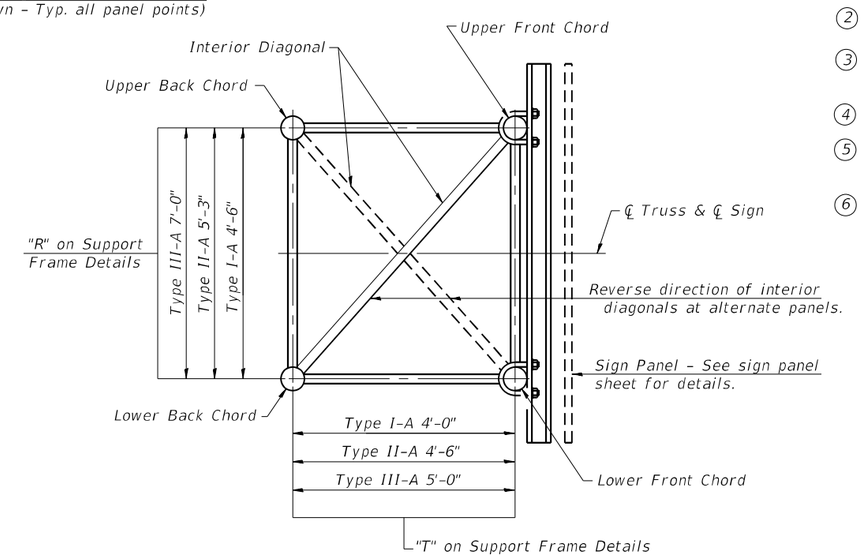

SECTION A-A

1. Contractor may alternatively use standard aluminum drive-fit cap to close end. ½" Ø drain hole in end plate/drive-fit cap. (Typ. at ends of all chords)
2. 5½" end dimension may vary by ±1" to provide uniform panel spacing (P).
3. Panel spacing (P) shall be uniform for entire truss and between 4'-0" and 5'-0" for Type I-A or 4'-0" and 5'-6" for Types II-A and III-A.
4. Vertical Diagonals in front and back face shall alternate.
5. Hidden lines show wind bracing alternates direction between planes of top and bottom chords.
6. All diagonals shall be detailed for minimum offset from the panel point based on the following: Offset shall be such as to provide a ¾" minimum to 1½" maximum clearance between any diagonal and any horizontal or vertical member, and to provide clearance for U-bolt connections of signs or walkway brackets.

OS-A-2 2-17-2017

QUIGG ENGINEERING INC

USER NAME = JCray	DESIGNED - ZLD	REVISED -	
D264C24-SHT-002-Span Truss Details.dgn	CHECKED - KWB	REVISED -	
PLOT SCALE = 0.1667 ' / in.	DRAWN - ZLD	REVISED -	
PLOT DATE = 2/10/2025	CHECKED - MDC	REVISED -	

STATE OF ILLINOIS
DEPARTMENT OF TRANSPORTATION

OVERHEAD SIGN STRUCTURES – ALUMINUM TRUSS
DETAILS FOR TRUSS TYPES I-A, II-A AND III-A

SHEET 2 OF 25 SHEETS

F.A.I. RTE.	SECTION	COUNTY	TOTAL SHEETS	SHEET NO.
39	(201-3)R & (4-1.5)R	WINNEBAGO	1685	432

CONTRACT NO. 64C24
ILLINOIS FED. AID PROJECT

MODEL: Default
FILE NAME: c:\pwworkdir\benesch projects\projects\d0183649\D264C24-SHT-002-Span Truss Details.dgn
2/9/2025 2:46:15 PM

TRUSS UNIT TABLE

Structure Number	Station	Design Truss Type	Exterior Units (2)			Interior Unit				Upper & Lower Chord		Verticals; Horizontals; Vertical, Horizontal, and Interior Diagonals		Camber at Midspan	Splicing Flange					
			No. Panels per Unit	Unit Lgth.(Le)	Panel Lgth.(P)	No. Req'd.	No. Panels per Unit	Unit Lgth.(Li)	Panel Lgth.(P)	O.D.	Wall	O.D.	Wall		Bolts No./Splice	Bolts Dia.	Weld Sizes W	Weld Sizes W1	A	B
2S101I039L120.1	2630+80	II-A	7	39'-2½"	5'-4"	1	6	33'-3"	5'-4"	6½"	5/16"	3"	5/16"	3⅝"	6	1"	⅜"	¼"	11"	14½"
2S101I039R120.4	2644+50	II-A	5	28'-11½"	5'-5"	1	6	33'-9"	5'-5"	5½"	5/16"	3"	5/16"	2½"	6	⅞"	⅜"	¼"	9¼"	12¼"
2S101I039L120.6	2657+00	I-A	6	30'-9"	4'-9¾"	1	6	30'-1½"	4'-9¾"	5"	5/16"	2½"	5/16"	2¾"	6	⅞"	5/16"	¼"	8¾"	11¾"
2S101I039R120.9	2673+00	II-A	6	30'-9"	4'-9¾"	2	6	30'-1½"	4'-9¾"	7"	5/16"	3"	5/16"	4¼"	6	1"	⅜"	¼"	11½"	15"
2S101I039L121.0	2679+00	I-A	6	30'-9"	4'-9¾"	1	6	30'-1½"	4'-9¾"	5"	5/16"	2½"	5/16"	2¾"	6	⅞"	5/16"	¼"	8¾"	11¾"
2S101I039L121.2	2686+50	III-A	5	28'-11½"	5'-5"	1	6	33'-9"	5'-5"	7"	5/16"	3¼"	5/16"	1¾"	6	1"	7/16"	5/16"	11½"	15"
2S101I039R121.4	2699+95	II-A	7	39'-2½"	5'-4"	1	6	33'-3"	5'-4"	6½"	5/16"	3"	5/16"	3⅝"	6	1"	⅜"	¼"	11"	14½"
2S101I039L121.6	2707+00	I-A	7	35'-8½"	4'-10"	1	6	30'-3"	4'-10"	5½"	5/16"	2½"	5/16"	3¼"	6	⅞"	⅜"	¼"	9¼"	12¼"

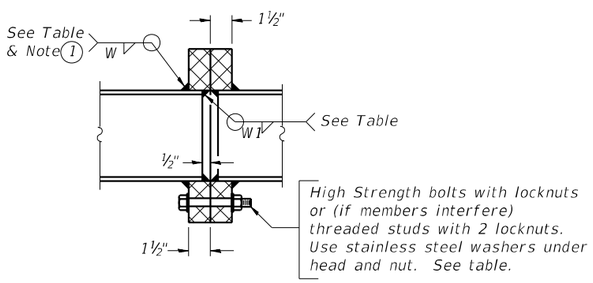

SECTION B-B

1 Splicing Flanges shall be attached to each truss unit with the truss shop assembled to camber shown. Truss units shall be in proper alignment and flange surfaces shall be shop bolted into full contact before welding. Sufficient external welds or tacks shall be made to secure flanges until remaining welds are made after disassembly. Adjacent flanges shall be "match marked" to insure proper field assembly.

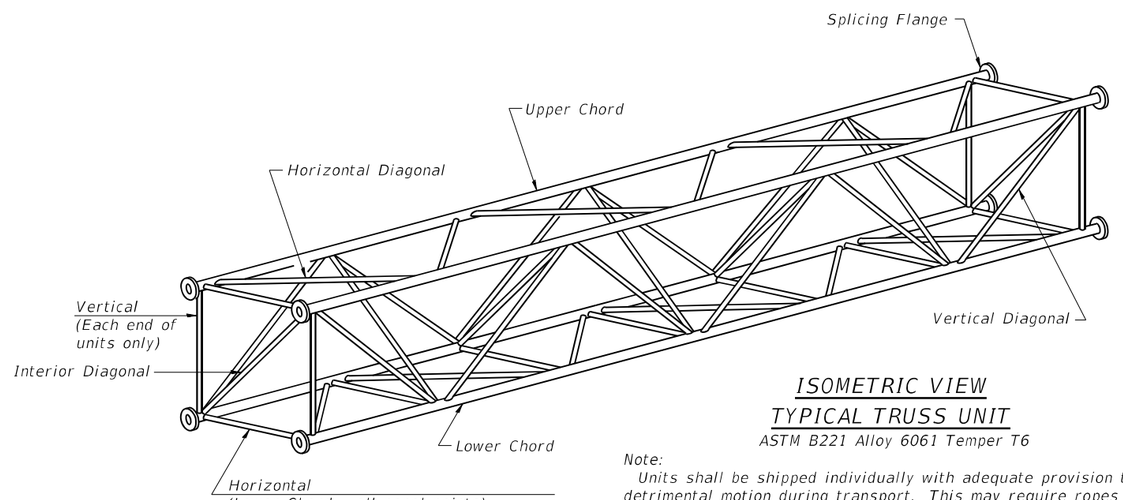

ISOMETRIC VIEW
TYPICAL TRUSS UNIT
ASTM B221 Alloy 6061 Temper T6

Note:
Units shall be shipped individually with adequate provision to prevent detrimental motion during transport. This may require ropes between horizontals and diagonals or energy dissipating (elastic) ties to the vehicle. The Contractor is responsible for maintaining the configuration and protection of the units.

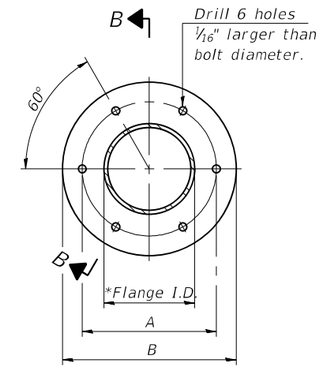

TRUSS TYPES I-A, II-A, & III-A

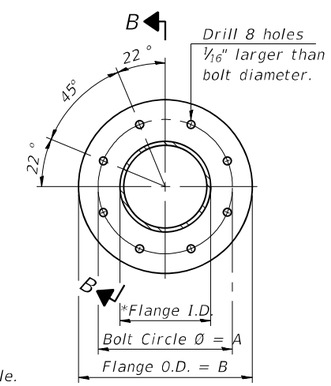

TRUSS TYPES II-A & III-A

SPLICING FLANGES

ASTM B221, Alloy 6061-T6
or ASTM B209, Alloy 6061-T651
*To fit O.D. of Chord with maximum gap of 1/16".

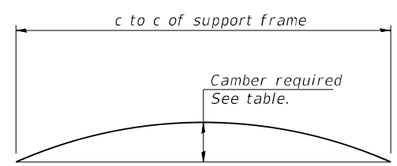

CAMBER DIAGRAM

Camber curve shown is theoretical. Actual camber attained by slope changes at splices between units.

CAMBER ATTAINMENT EXAMPLES:

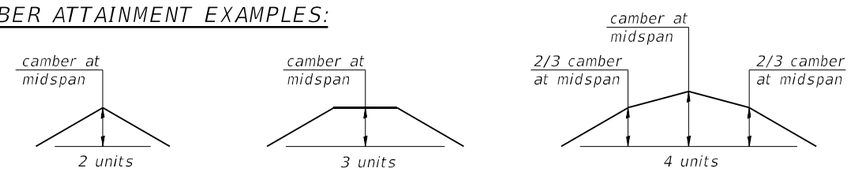

Camber shown is for fabrication only, measured with truss fully supported. (No-load condition)

0S4-A-2 2-17-2017

QUIGG ENGINEERING INC

USER NAME = JCray	DESIGNED - ZLD	REVISED -	
D264C24-SHT-003-Span Truss Details.dgn	CHECKED - KWB	REVISED -	
PLOT SCALE = 0.1667 ' / in.	DRAWN - ZLD	REVISED -	
PLOT DATE = 2/10/2025	CHECKED - MDC	REVISED -	

STATE OF ILLINOIS
DEPARTMENT OF TRANSPORTATION

OVERHEAD SIGN STRUCTURES – ALUMINUM TRUSS DETAILS
FOR TRUSS TYPES I-A, II-A AND III-A

SHEET 3 OF 25 SHEETS

F.A.I. RTE.	SECTION	COUNTY	TOTAL SHEETS	SHEET NO.
39	(201-3)R & (4-1.5)R	WINNEBAGO	1685	433
		CONTRACT NO. 64C24		
	ILLINOIS	FED. AID PROJECT		

MODEL: Default
FILE NAME: c:\pwworking\benesch projects\projects\d0183649\D264C24-SHT-003-Span Truss Details.dgn
2/9/2025 2:46:27 PM

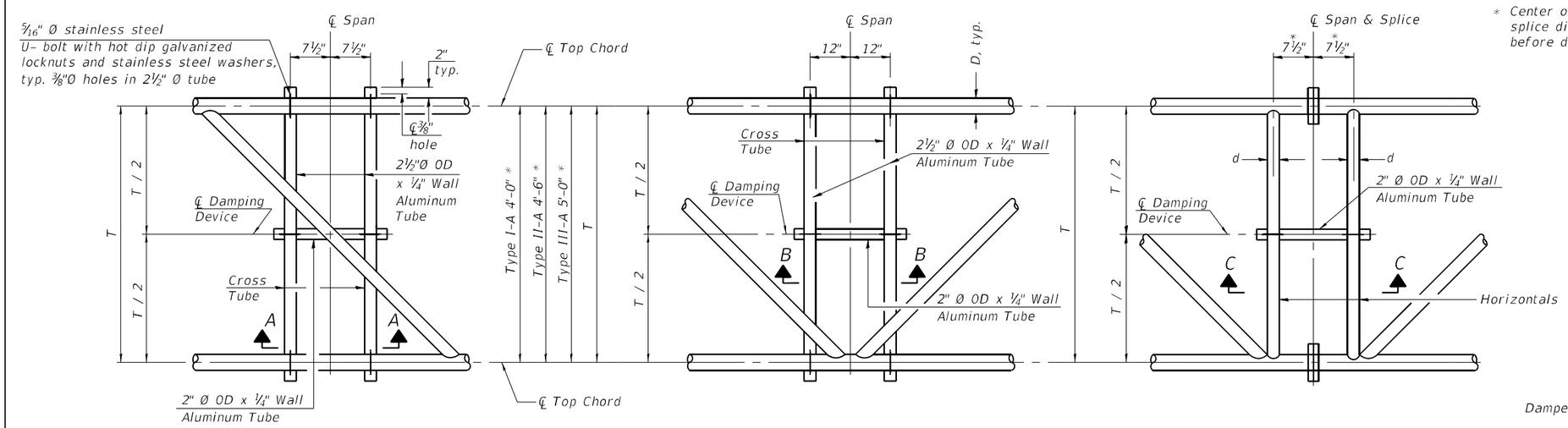

* Center of horizontal to center of splice dimension may vary. Verify before drilling holes in mounting tube.

PLAN DETAIL "A"
℄ Span between Panel Points

PLAN DETAIL "B"
℄ Span at Panel Point

PLAN DETAIL "C"
℄ Span at ℄ Chord Splice

NOTES

Damper: One damper per truss. (31 lbs. minimum Stockbridge-Type Aluminum - 29" minimum between ends of weights) Cost included in Overhead Sign Structure...

Materials: Materials: Aluminum tubes shall be ASTM B221 alloy 6061 temper T6. Cost included in Overhead Sign Structure...

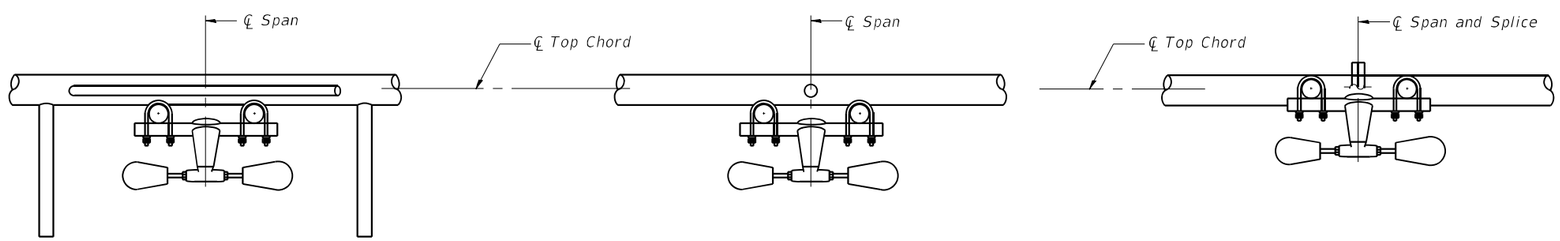

SECTION A-A

SECTION B-B

SECTION C-C

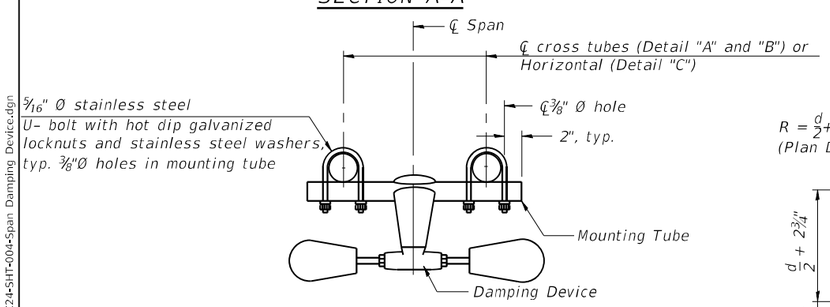

TRUSS DAMPING
DEVICE CONNECTION DETAIL
(Typical)

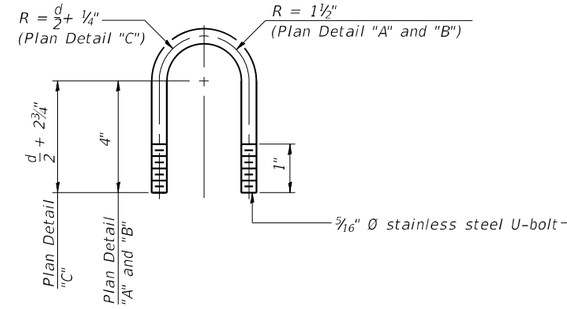

DAMPING DEVICE MOUNTING
TUBE U-BOLT DETAIL
(Typical)

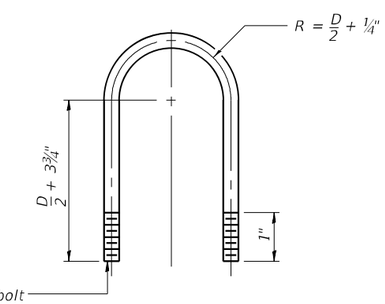

TOP CHORD TO CROSS TUBE
U-BOLT DETAIL
(Typical - Detail "A" and "B")

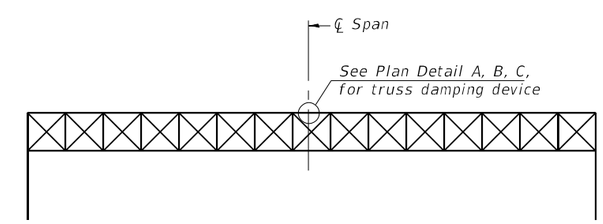

ELEVATION
Aluminum Overhead
Sign Truss

OS-A-D 2-17-2017

QUIGG ENGINEERING INC	USER NAME = JCray	DESIGNED - ZLD	REVISED -
	D264C24-SHT-004-Span Damping Device.dgn	CHECKED - KWB	REVISED -
	PLOT SCALE = 0.1667 ' / in.	DRAWN - ZLD	REVISED -
	PLOT DATE = 2/10/2025	CHECKED - MDC	REVISED -

STATE OF ILLINOIS
DEPARTMENT OF TRANSPORTATION

OVERHEAD SIGN STRUCTURE
DAMPING DEVICE

SHEET 4 OF 25 SHEETS

F.A.I. RTE.	SECTION	COUNTY	TOTAL SHEETS	SHEET NO.
39	(201-3)R & (4-1.5)R	WINNEBAGO	1685	434

CONTRACT NO. 64C24

ILLINOIS | FED. AID PROJECT

MODEL: Default
FILE NAME: c:\pwworkdir\benesch projects\projects\d0183649\D264C24-SHT-004-Span Damping Device.dgn
2/9/2025 2:46:39 PM

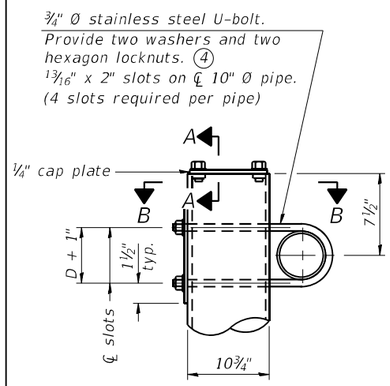

DETAIL A

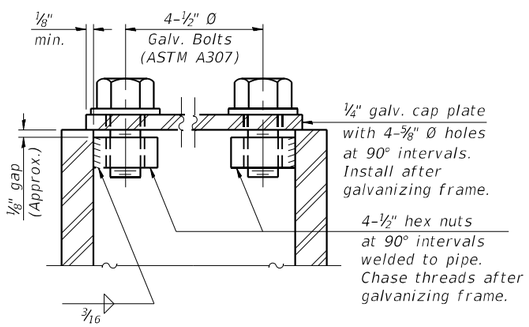

SECTION A-A

As an alternate to bolts, may use galvanized drive-fit caps installed after galvanizing frame.

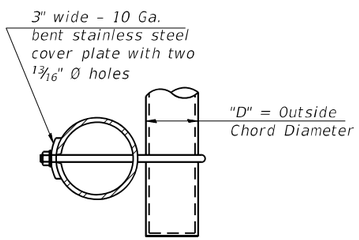

SECTION B-B

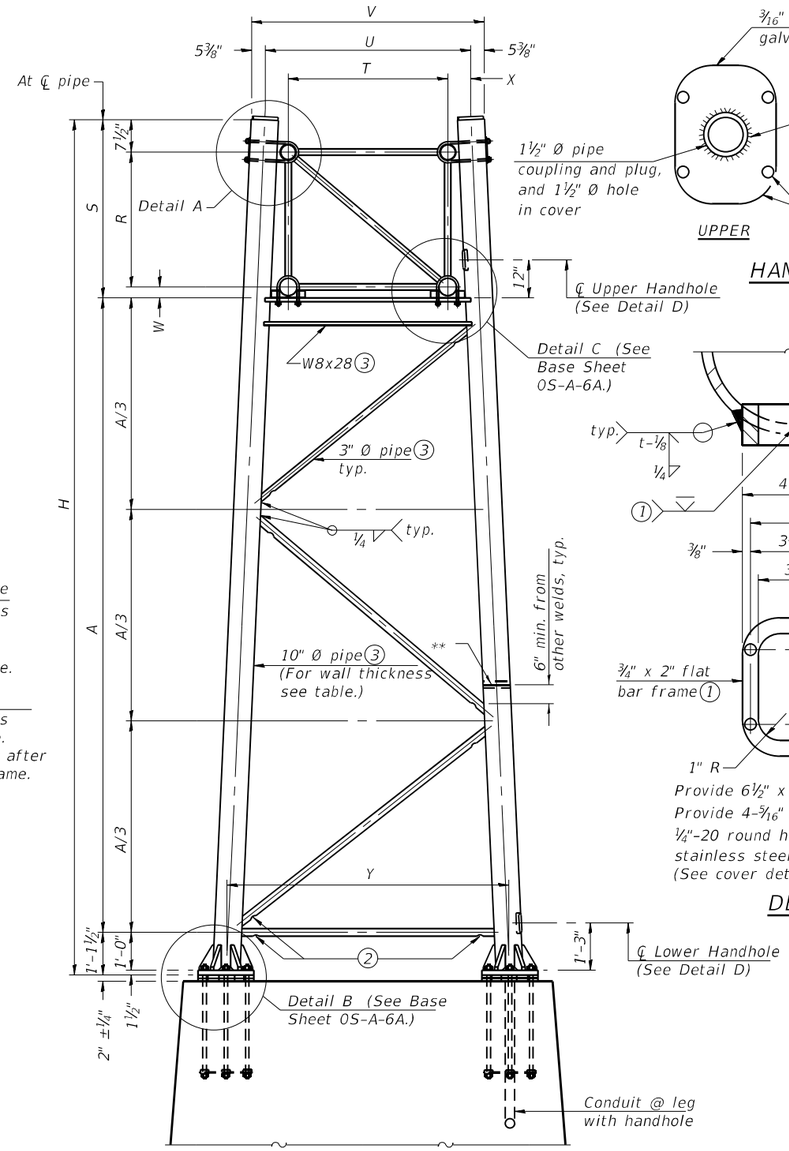

For Foundation Details, see base sheet OS-F3 (Spread Footing) or OS4-F3 (Drilled Shaft).

SIDE ELEVATION

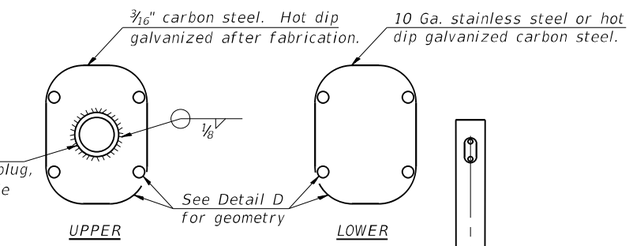

HANDHOLE COVERS

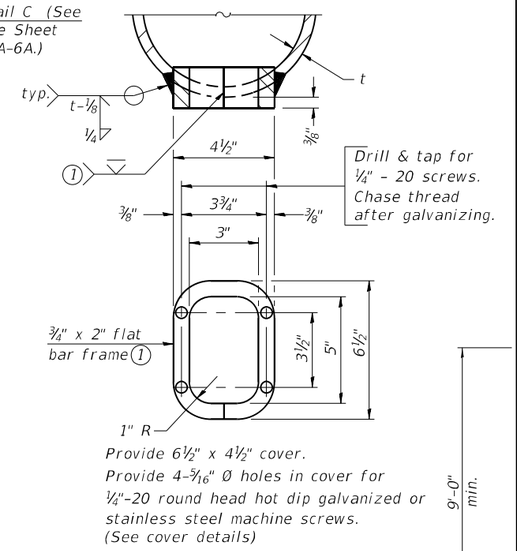

DETAIL D

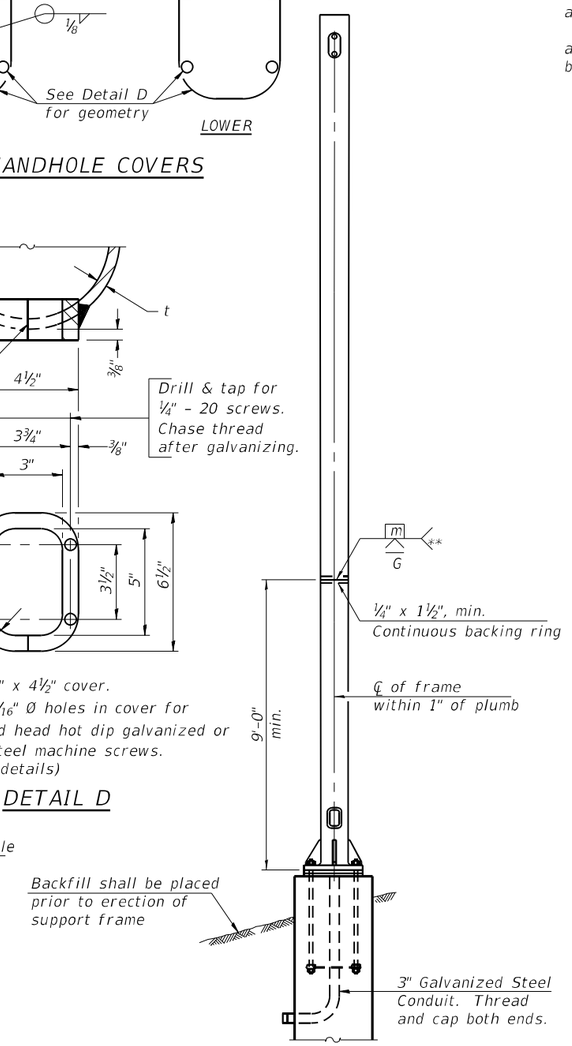

END ELEVATION

Support Design Loads: See Base Sheet OS-A-1 for design and loading criteria.
Load combinations checked include deadload plus:
a) 100% wind normal to sign, 20% parallel to sign
b) 60% wind normal to sign, 30% parallel to sign

(1) In lieu of fabricated handhole frame as shown, may cut from 2" plate (rolling direction vertical). All cut faces to be ground to ANSI Roughness of 500μ in or less.

(2) Galvanizing vent holes of adequate size shall be provided on underside at each end of bracing pipes. Alternately, holes may be provided in wall of pipe column. All vent holes shall be drilled and de-burred, typ.

(3) Steel pipe, plate, carbon steel handhole covers and rolled sections shall be hot dip galvanized after fabrication. Painting is not permitted. See Base Sheet OS-A-1.

(4) See General Notes for fasteners.

(5) Dimensions shown are based on selection criteria in the Sign Structures Manual. Nonstandard applications must have dimensions verified or amended as appropriate.

(6) "H" based on 15'-0" or actual sign height, whichever is greater.

Structure Number	Station	Support Left	Support Right	Truss Type	Pipe Wall Thickness	H (6)	A
2S101I039L120.1	2630+80	X		II-A	0.365" (Std)	25'-11"	18'-6¼"
			X	II-A	0.365" (Std)	27'-9"	20'-4¼"
2S101I039R120.4	2644+50	X		II-A	0.365" (Std)	29'-1"	21'-8¼"
			X	II-A	0.500"	34'-6"	27'-1¼"
2S101I039L120.6	2657+00	X		I-A	0.279"	26'-7"	20'-0"
			X	I-A	0.365"	35'-3"	28'-8"
2S101I039R120.9	2673+00	X		II-A	0.365" (Std)	27'-10"	20'-5¼"
			X	II-A	0.500"	32'-9"	25'-4¼"
2S101I039L121.0	2679+00	X		I-A	0.279"	26'-10"	20'-3"
			X	I-A	0.365"	32'-6"	25'-11"
2S101I039R121.4	2699+95	X		II-A	0.365" (Std)	27'-10"	20'-5¼"
			X	II-A	0.365" (Std)	30'-4"	22'-11¼"
2S101I039L121.6	2707+00	X		I-A	0.279"	27'-0"	20'-5"
			X	I-A	0.365"	32'-4"	25'-9"

Truss Type	Dimensions R	S	T	U	V	W	X	Y
I-A	4'-6"	5'-5½"	4'-0"	5'-6"	6'-4¾"	4"	9"	8'-3"
II-A (5)	5'-3"	6'-3¼"	4'-6"	6'-1"	6'-11¾"	4¾"	9½"	8'-3"

10" Ø PIPE TRUSS SUPPORT FRAME

** One butt welded joint is allowed only on one post per support frame. If used, weld procedure must be pre-approved by Engineer and joint shall receive 100% RT or UT (tension criteria) at Contractor's expense.

OS-A-6 2-17-2017

QUIGG ENGINEERING INC

USER NAME = JCray	DESIGNED - ZLD	REVISED -	
D264C24-SHT-005-Span 10in Support Frame.dgn	CHECKED - KWB	REVISED -	
PLOT SCALE = 0.1667 ' / in.	DRAWN - ZLD	REVISED -	
PLOT DATE = 2/10/2025	CHECKED - MDC	REVISED -	

STATE OF ILLINOIS
DEPARTMENT OF TRANSPORTATION

OVERHEAD SIGN STRUCTURES
SUPPORT FRAME FOR ALUMINUM TRUSS

SHEET 5 OF 25 SHEETS

F.A.I. RTE.	SECTION	COUNTY	TOTAL SHEETS	SHEET NO.
39	(201-3)R & (4-1,5)R	WINNEBAGO	1685	435

CONTRACT NO. 64C24

ILLINOIS FED. AID PROJECT

MODEL: Default
FILE NAME: c:\pwworkdir\benesch projects\projects\d0183649\D264C24-SHT-005-Span 10in Support Frame.dgn
2/9/2025 2:46:51 PM

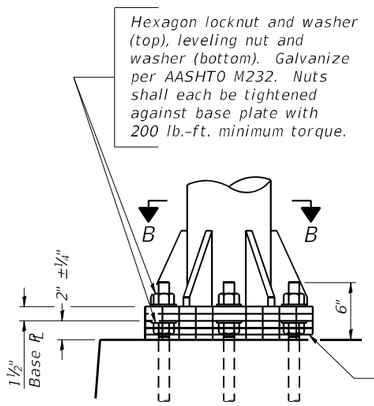

DETAIL B

Ribs shall be cut to fit slope of pipe.

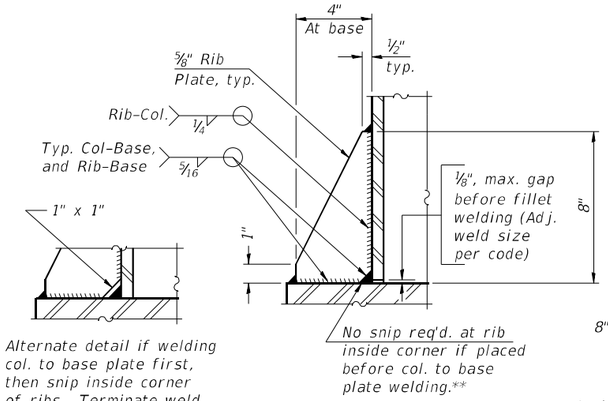

SECTION D-D

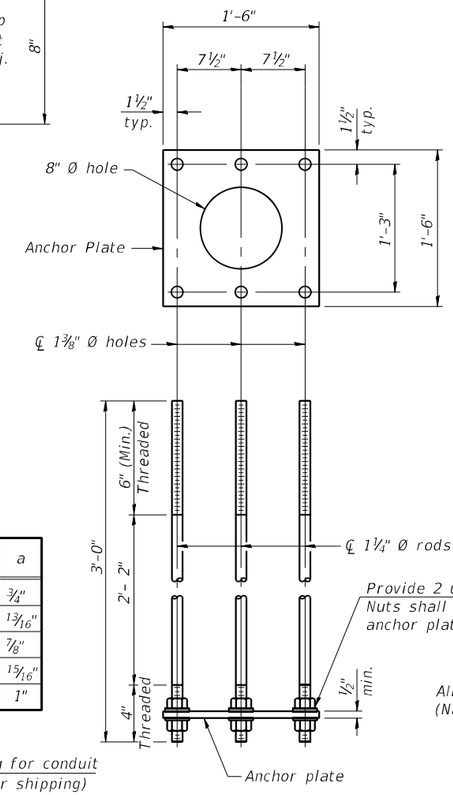

ANCHOR ROD DETAIL

Spread Footing Foundation

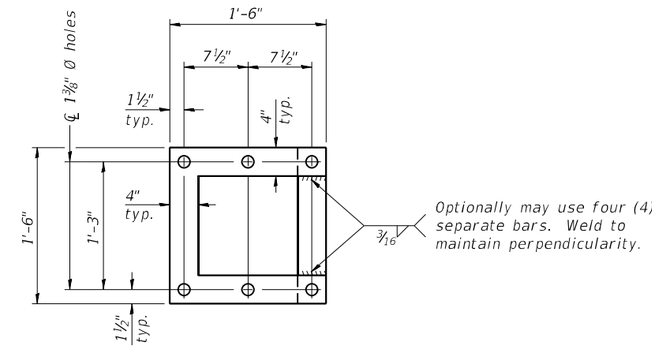

POSITIONING PLATE(S)

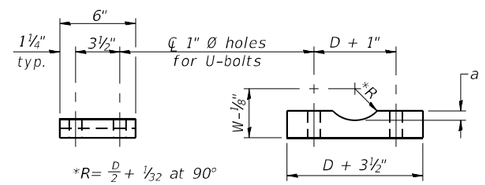

*R= D/2 + 1/32 at 90°

D = Outside Diameter of Chord.
For W, see Base Sheet OS-A-6.

SADDLE SHIM DETAIL

ASTM B26 Alloy 356-F
or
ASTM B209 Alloy 6061-T651
(4 required per sign truss)

Truss Chord Nominal Dia.	a
5"	¾"
5½"	13/16"
6"	⅞"
6½"	15/16"
7"	1"

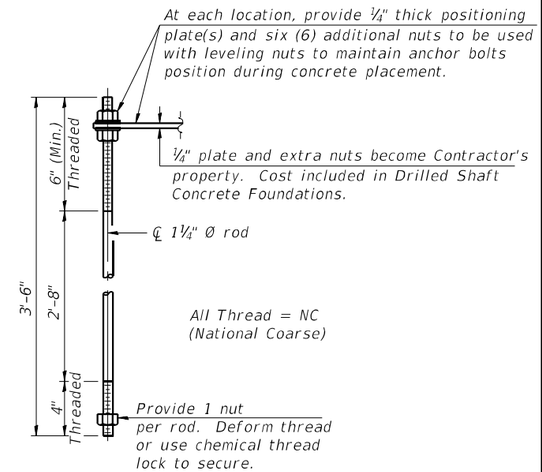

ANCHOR ROD DETAIL

Drilled Shaft Foundation

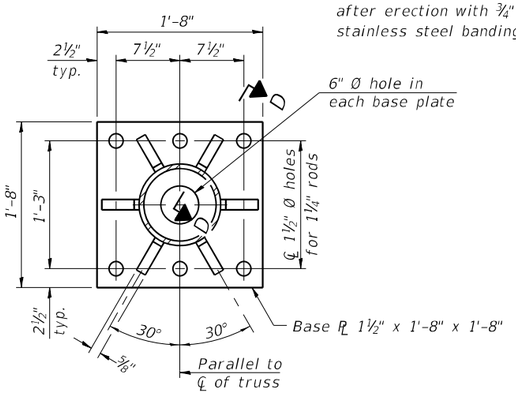

SECTION B-B

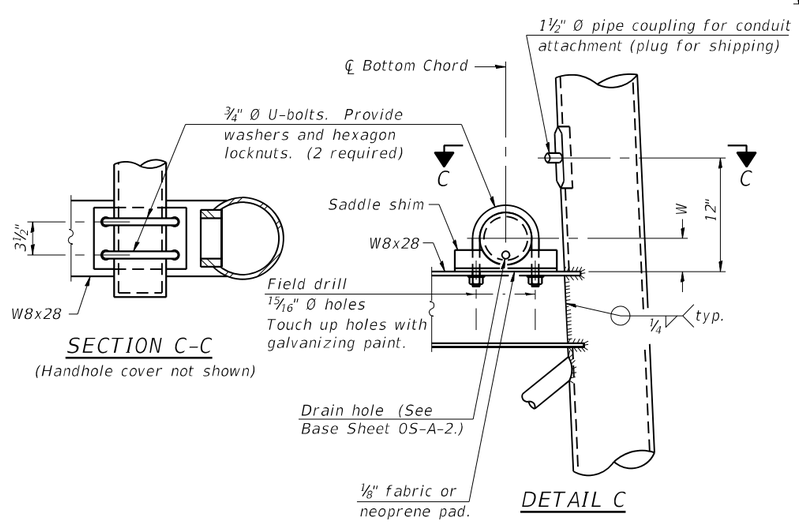

SECTION C-C

(Handhole cover not shown)

DETAIL C

Anchor rods shall conform to ASTM F1554 Grade 105. Galvanize upper 12" minimum per AASHTO M232. No welding shall be permitted on rods.

10" Ø PIPE SUPPORT FRAME DETAILS

OS-A-6A 2-17-2017

QUIGG ENGINEERING INC

USER NAME = JCray	DESIGNED - ZLD	REVISED -	
D264C24-SHT-006-Span 10in Support Frame Details	CHECKED - KWB	REVISED -	
PLOT SCALE = 0.1667 ' / in.	DRAWN - ZLD	REVISED -	
PLOT DATE = 2/10/2025	CHECKED - MDC	REVISED -	

STATE OF ILLINOIS
DEPARTMENT OF TRANSPORTATION

OVERHEAD SIGN STRUCTURES
SUPPORT FRAME DETAILS – ALUMINUM TRUSS

SHEET 6 OF 25 SHEETS

F.A.I. RTE.	SECTION	COUNTY	TOTAL SHEETS	SHEET NO.
39	(201-3)R & (4-1.5)R	WINNEBAGO	1685	436

CONTRACT NO. 64C24

ILLINOIS FED. AID PROJECT

MODEL: Default
FILE NAME: c:\pwworkdir\benesch projects\projects\d0183649\D264C24-SHT-006-Span 10in Support Frame Details.dgn
2/9/2025 2:47:04 PM

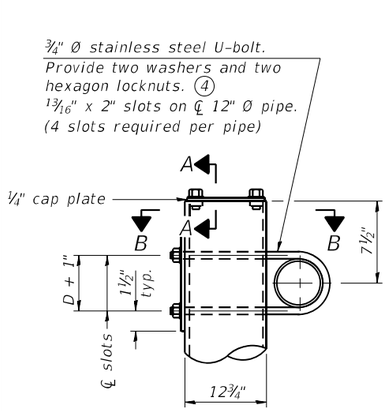

DETAIL A

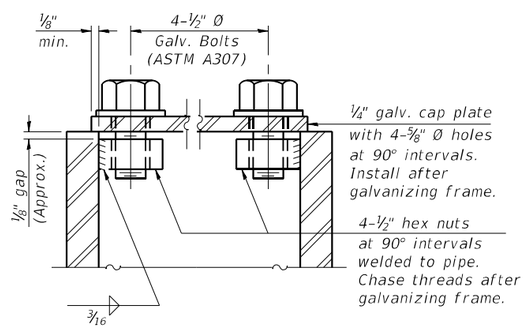

SECTION A-A

As an alternate to bolts, may use galvanized drive-fit caps installed after galvanizing frame.

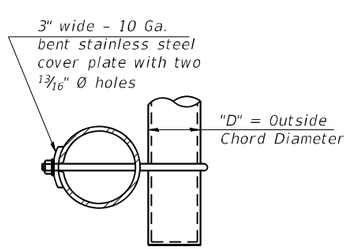

SECTION B-B

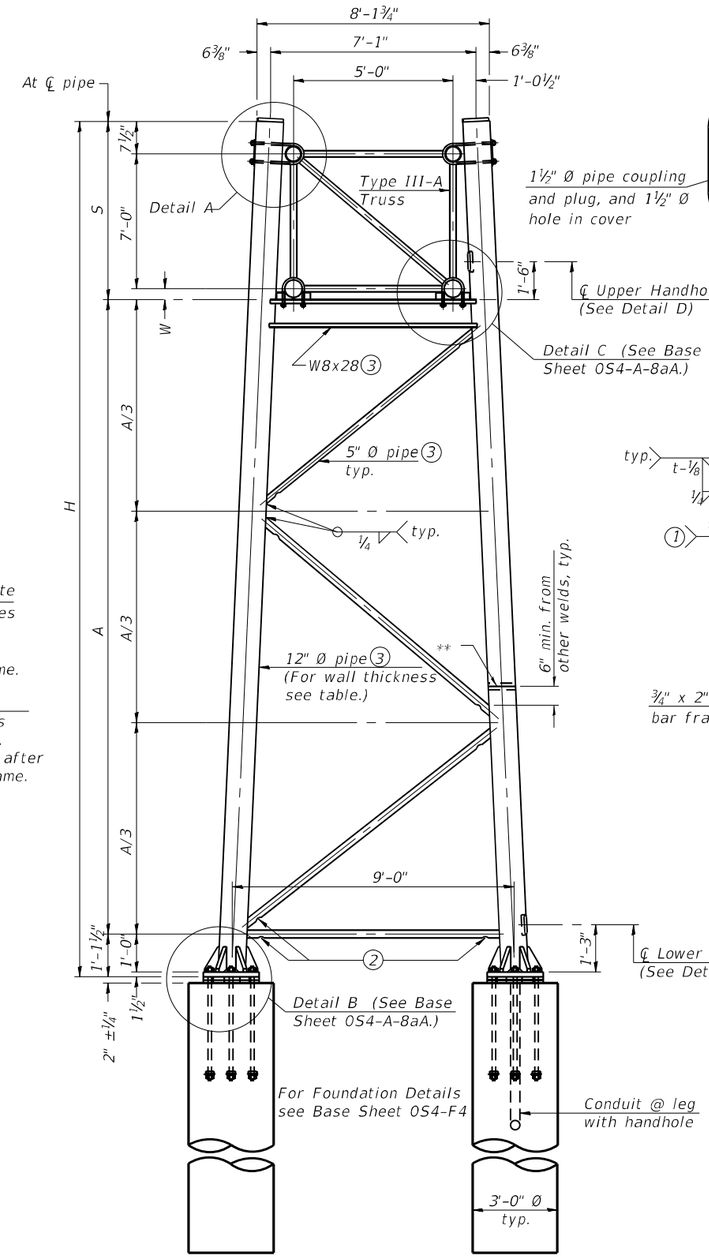

SIDE ELEVATION

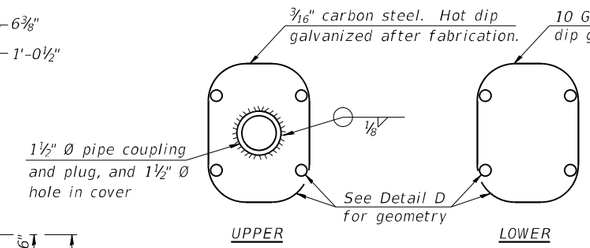

HANDHOLE COVERS

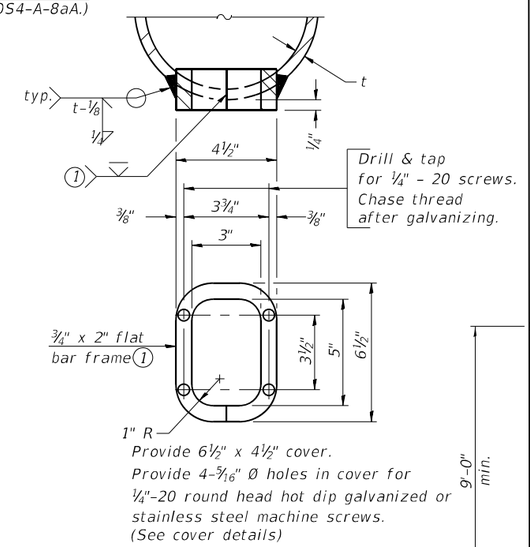

DETAIL D

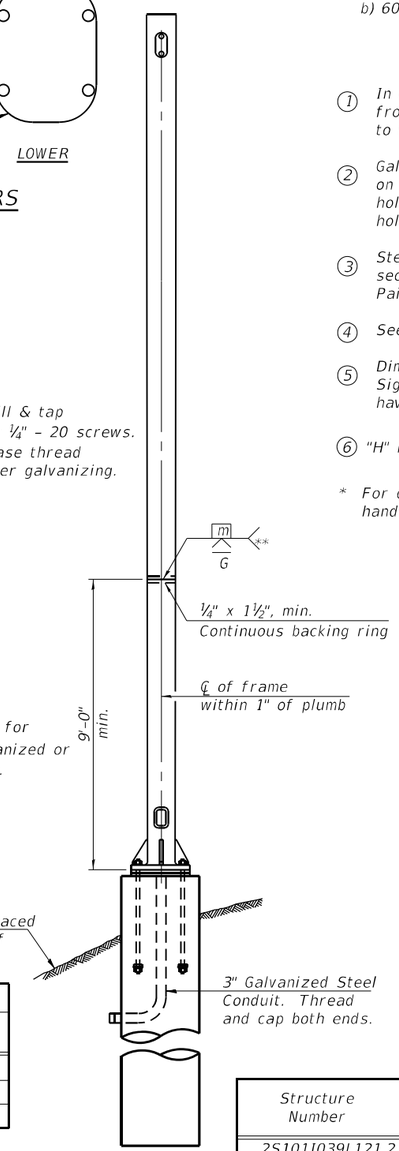

END ELEVATION

Dimensions		
Truss Chord Nominal Dia.	W	S
7"	4¾"	8'-0¼"
8½"	5½"	8'-1"
9"	5¾"	8'-1¼"

Support Design Loads: See Base Sheet OS-A-1 for design and loading criteria.
Load combinations checked include deadload plus:
a) 100% wind normal to sign, 20% parallel to sign
b) 60% wind normal to sign, 30% parallel to sign

(1) In lieu of fabricated handhole frame as shown, may cut from 2" plate (rolling direction vertical). All cut faces to be ground to ANSI Roughness of 500 µin or less.

(2) Galvanizing vent holes of adequate size shall be provided on underside at each end of bracing pipes. Alternately, holes may be provided in wall of pipe column. All vent holes shall be drilled and de-burred, typ.

(3) Steel pipe, plate, carbon steel handhole covers and rolled sections shall be hot dip galvanized after fabrication. Painting is not permitted. See Base Sheet OS-A-1.

(4) See General Notes for fasteners.

(5) Dimensions shown are based on selection criteria in the Sign Structures Manual. Nonstandard applications must have dimensions verified or amended as appropriate.

(6) "H" based on 15'-0" or actual sign height, whichever is greater.

* For dynamic message sign installations, provide upper and lower handholes in both legs of each support frame.

Structure Number	Station	Support Left	Support Right	Pipe Wall Thickness	H (6)	A
2S101I039L121.2	2686+50	X		0.33"	23'-7"	14'-5¼"
			X	0.33"	30'-8"	21'-6¼"

TRUSS SUPPORT DETAILS

(12" Ø Pipe-Type III-A Truss

** One butt welded joint is allowed only on one post per support frame. If used, weld procedure must be pre-approved by Engineer and joint shall receive 100% RT or UT (tension criteria) at Contractor's expense.

OS4-A-8a 2-17-2017

MODEL: Default
FILE NAME: c:\pwworking\benesch projects\projects\d0183649\D264C24-SHT-007-Span 12in Support Frame.dgn
2/9/2025 2:47:17 PM

QUIGG ENGINEERING INC

USER NAME = JCray	DESIGNED - ZLD	REVISED -	
D264C24-SHT-007-Span 12in Support Frame.dgn	CHECKED - KWB	REVISED -	
PLOT SCALE = 0.1667 ' / in.	DRAWN - ZLD	REVISED -	
PLOT DATE = 2/10/2025	CHECKED - MDC	REVISED -	

STATE OF ILLINOIS
DEPARTMENT OF TRANSPORTATION

OVERHEAD SIGN STRUCTURES – SUPPORT FRAME FOR TYPE III-A ALUMINUM TRUSS

SHEET 7 OF 25 SHEETS

F.A.I. RTE.	SECTION	COUNTY	TOTAL SHEETS	SHEET NO.
39	(201-3)R & (4-1.5)R	WINNEBAGO	1685	437

CONTRACT NO. 64C24

ILLINOIS FED. AID PROJECT

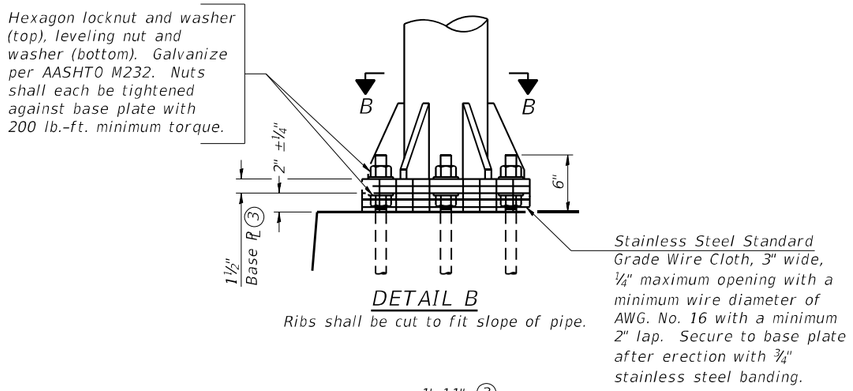

DETAIL B

Ribs shall be cut to fit slope of pipe.

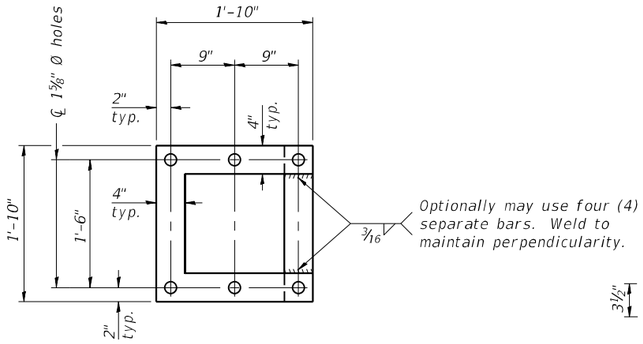

POSITIONING PLATE(S)

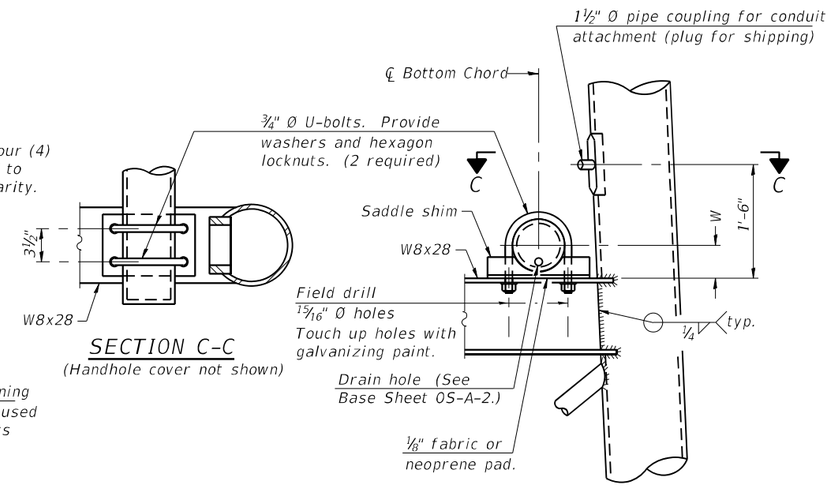

SECTION C-C

(Handhole cover not shown)

DETAIL C

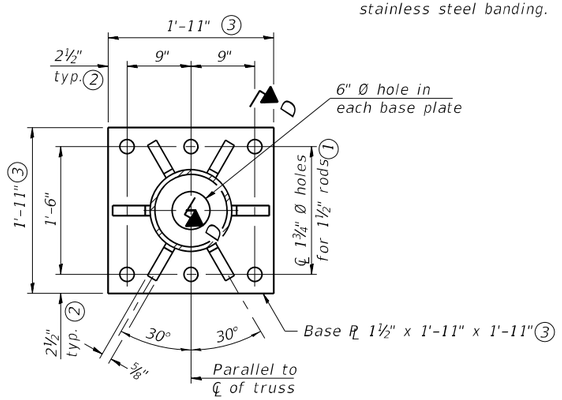

SECTION B-B

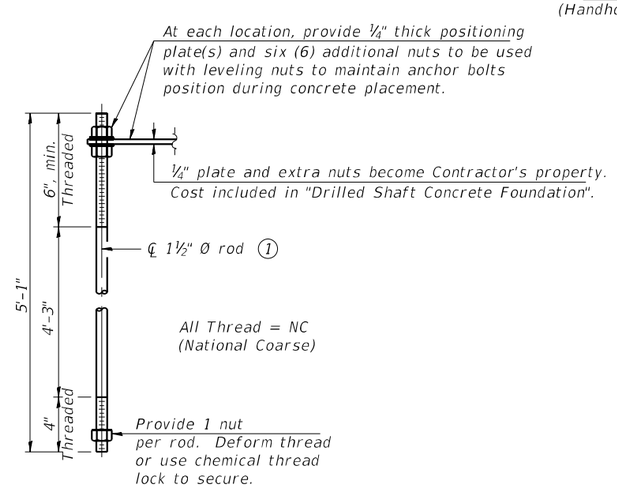

ANCHOR ROD DETAIL

Anchor rods shall conform to ASTM F1554 Grade 105 Galvanize upper 12" minimum per AASHTO M232. No welding shall be permitted on rods.

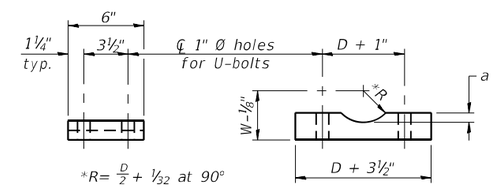

*R= $\frac{D}{2}$ + 1/32 at 90°

D = Outside Diameter of Chord.
For W, see Base Sheet OS-A-6.

Truss Chord Nominal Dia.	a
7"	1"
8½"	1¼"
9"	1⅜"

SADDLE SHIM DETAIL

ASTM B26 Alloy 356-F
or
ASTM B209 Alloy 6061-T651
(4 required per sign truss)

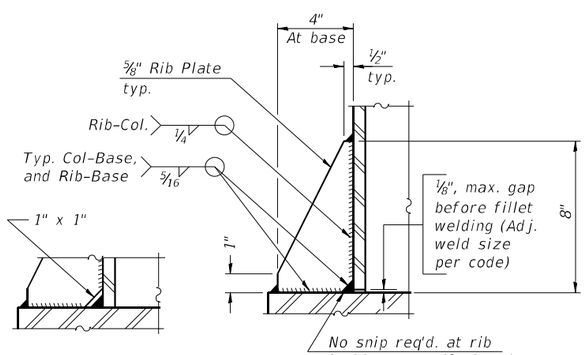

** Alternate detail if welding col. to base plate first, then snip inside corner of ribs. Terminate weld on rib ¼" from snip.

SECTION D-D

TYPE III-A TRUSS
12" Ø PIPE SUPPORT FRAME DETAILS

Notes:
For Type III-A Truss spans greater than 150 ft, and up to 160 ft.:

① 1¾" Ø rod, 2" Ø holes

② 2¾" edge distance

③ Base PL 1⅝" x 1'-11½" x 1'-11½"

OS4-A-8aA 2-17-2017

MODEL: Default
FILE NAME: c:\pwworkdir\benesch projects\projects\d0183649\D264C24-SHT-008-Span 12in Support Frame Details.dgn
2/9/2025 2:47:29 PM

QUIGG ENGINEERING INC

USER NAME = JCray	DESIGNED - ZLD	REVISED -	
D264C24-SHT-008-Span 12in Support Frame Details	CHECKED - KWB	REVISED -	
PLOT SCALE = 0.1667 ' / in.	DRAWN - ZLD	REVISED -	
PLOT DATE = 2/10/2025	CHECKED - MDC	REVISED -	

STATE OF ILLINOIS
DEPARTMENT OF TRANSPORTATION

OVERHEAD SIGN STRUCTURES
SUPPORT FRAME FOR TYPE III-A ALUMINUM TRUSS

SHEET 8 OF 25 SHEETS

F.A.I. RTE.	SECTION	COUNTY	TOTAL SHEETS	SHEET NO.
39	(201-3)R & (4-1.5)R	WINNEBAGO	1685	438

CONTRACT NO. 64C24

ILLINOIS FED. AID PROJECT

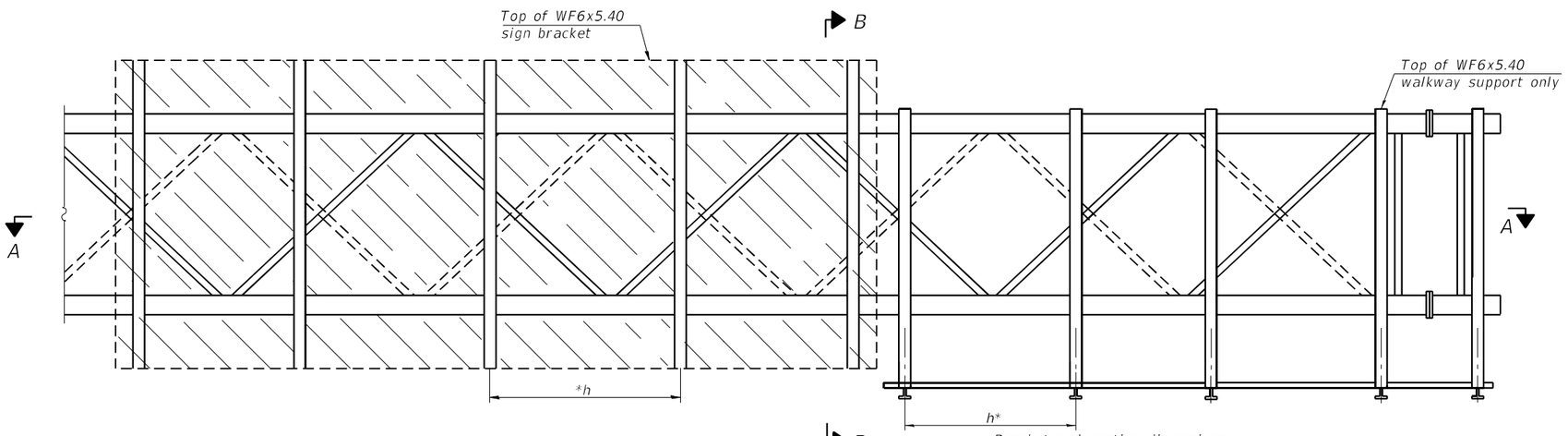

TYPICAL FRONT ELEVATION

With handrail omitted for clarity.

Bracket and grating dimensions are nominal and will vary based on actual DMS cabinet dimensions plus manufacturer's mounting devices.

① If walkway is required left of the DMS cabinet, a=1'-6" and b=walkway lengths. If walkway is not required left of the DMS cabinet, b=0 and "a" is dimension from left support frame to left end of cabinet.

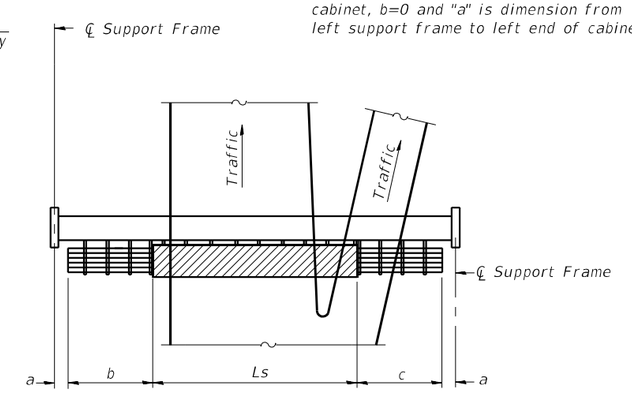

PLAN
WALKWAY AND HANDRAIL SKETCH

(Road plan beneath truss varies)

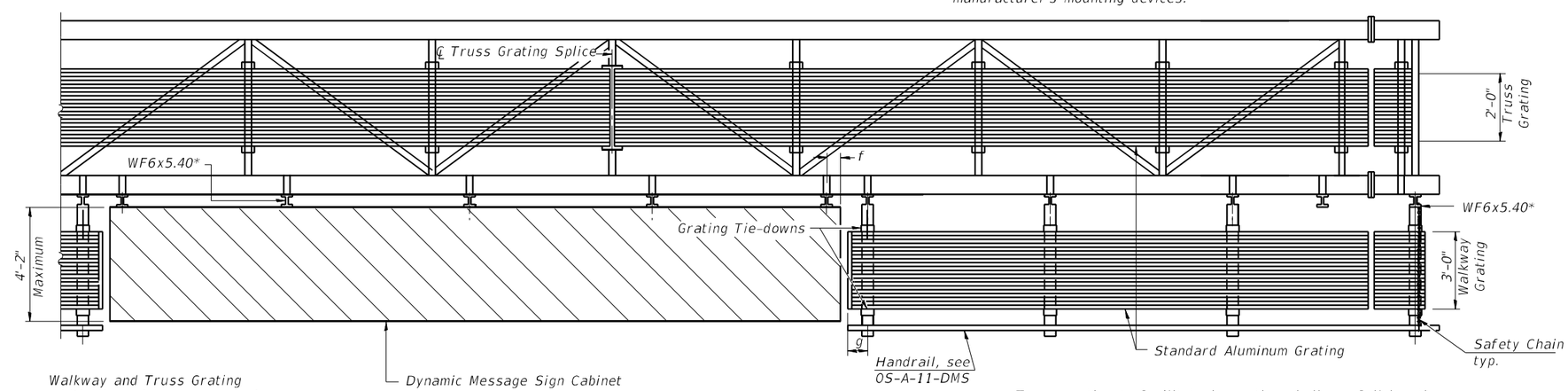

Walkway and Truss Grating width dimensions are nominal and may vary ±½" based on available standard widths.

Truss grating to facilitate inspection shall run full length (center to center of support frames) ±12" on overhead trusses. Cost of truss grating is included in "Overhead Sign Structure".

SECTION A-A

Handrail and walkway shall span a minimum of three brackets between splices and/or gap joints.
Place all sign and walkway brackets as close to panel points as practical.
Grating and handrail splices placed as needed.

BRACKET TABLE

WF6x5.40 ASTM B308, Alloy 6061-T6		
Sign Width		Number Brackets Required
Greater Than	Less Than or Equal To	
	8'-0"	2
8'-0"	14'-0"	3
14'-0"	20'-0"	4
20'-0"	26'-0"	5
26'-0"	32'-0"	6

Structure Number	Station	a	b	c	Ls	Walkway Grating and Handrail Lengths
2S101I039L121.2	2686+50	24'-0"	0'-0"	14'-6"	27'-0"	14'-6"

Notes:
* Space walkway brackets WF6x5.40 for efficiency and within limits shown:

f = 12" maximum, 4" minimum (End of sign to ℄ of nearest bracket)
g = 12" maximum, 4" minimum (End of walkway grating to ℄ of nearest support bracket)
h = 6'-0" maximum (℄ to ℄ sign and/or walkway support brackets, WF6x5.40

Maximum DMS weight = 5000 lbs. 4'-2" maximum cabinet depth includes depth of cabinet plus connection to WF6x5.40.
For Section B-B and Grating Splice Details, see Base Sheet OS-A-10-DMS.
For Handrail Splice Details, see Base Sheet OS-A-11-DMS.

OS-A-9-DMS 2-17-2017

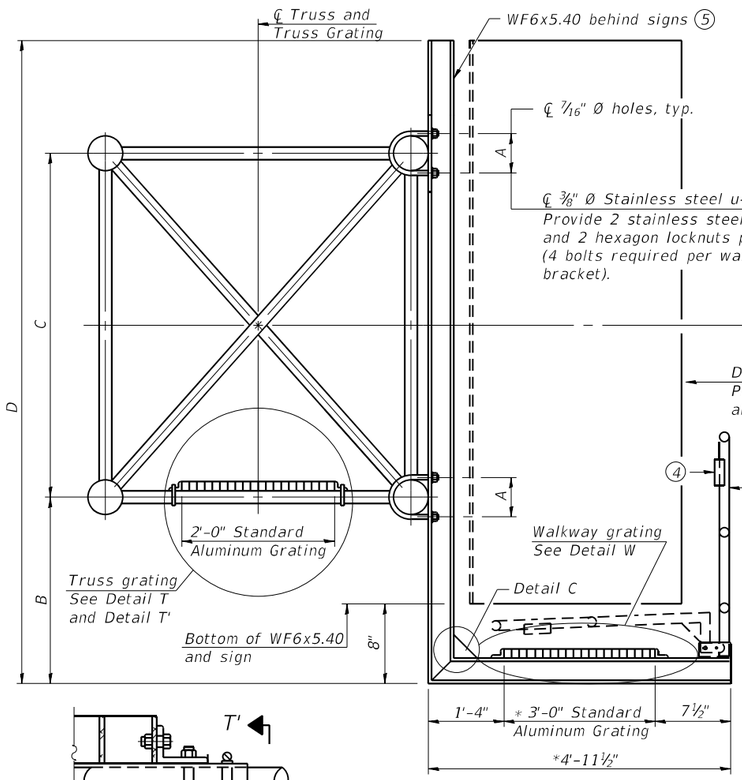

SECTION B-B

* Bracket and grating dimensions are nominal and will vary based on actual DMS cabinet dimensions plus manufacturer's mounting devices.

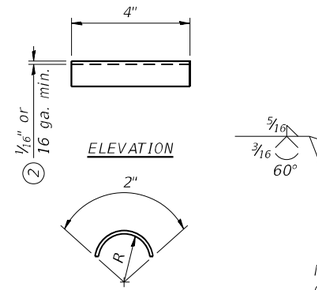

SHIM DETAIL

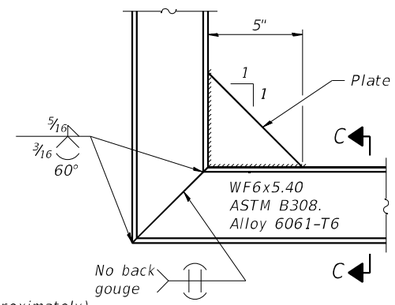

DETAIL C

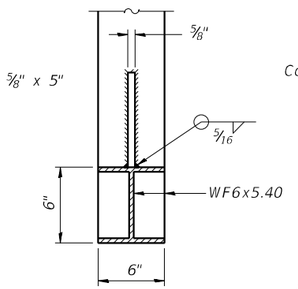

SECTION C-C

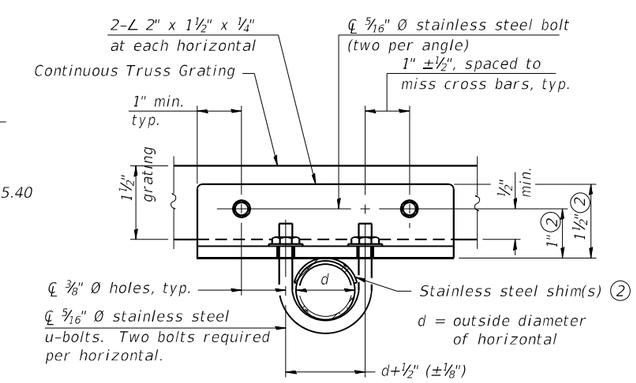

SECTION T-T

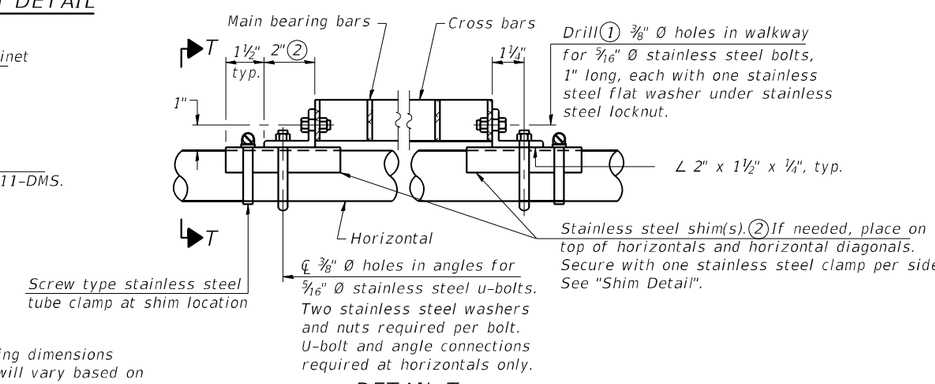

DETAIL T

(Continuous Truss grating)

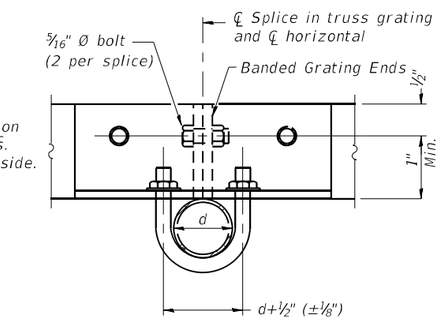

SECTION T'-T'

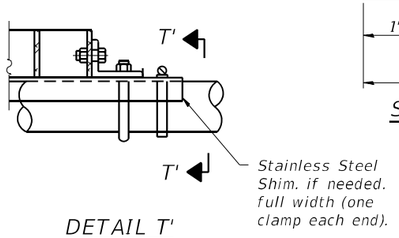

DETAIL T'

(Truss grating splice)
Details not shown same as Detail T.
Alternate materials may be used subject to the Engineer's review and approval.

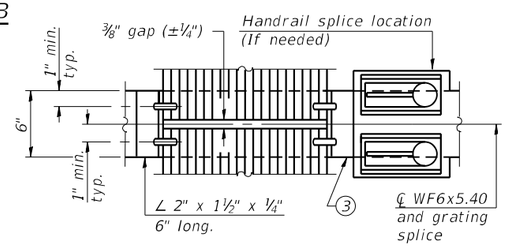

(AT WALKWAY GRATING SPLICE)

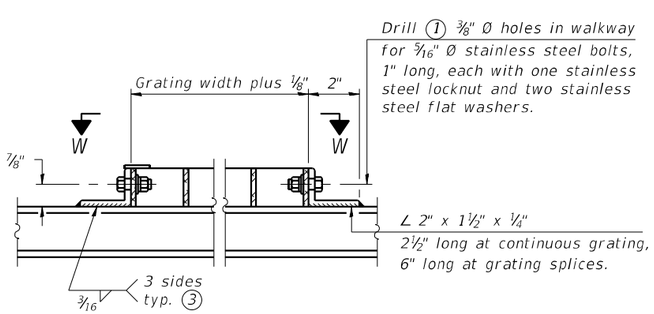

DETAIL W

(Walkway grating)

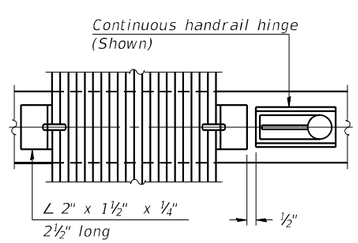

(CONTINUOUS WALKWAY GRATING)

SECTION W-W

SPECIFICATIONS FOR STANDARD ALUMINUM GRATING

Main Bearing Bars shall be 3/16" x 1½" on 1 3/16" centers and conform to ASTM B211 Alloy 6061-T6.

Cross bars shall be 3/16" x 1½" on 4" centers and conform to ASTM B221 Alloy 6063-T5 or 6061-T6.

OR

Aluminum Grating with modified "t" sections for main bearing bars shall meet the following requirements:

Main bars shall conform to ASTM B221 Alloy 6061-T6 and have a minimum section modulus equal to 0.0705 in.³ per bar, a depth of 1½", spaced on 1 3/16" centers.

Cross bars shall conform to ASTM B221 Alloy 6063-T5 or T-42 and spaced on 4" centers.

Structure Number	Station	A	(6) B	C	(6) D
2S101I039L121.2	2686+50	7½"	1'-8"	7'-0"	9'-8"

(1) Drilling holes in grating may be done in shop or field, based on Contractor's preference and subject to accurate alignment.

(2) Stainless steel shims shall be placed as shown in Detail T if needed to compensate for alignment variations between horizontal and diagonal pipes beyond adjustment provided by angles. Thicker shims may be used subject to shims performing properly.

(3) If Handrail Joint present, weld angle to WF(A-N)4 and ¼" extension bars. (See Base Sheet OS-A-11.)

(4) PL 1/8" x ½" x 2" welded to handrail posts to protect locations that contact grating.

(5) Cabinet manufacturer must design and supply hardware for connection of cabinet to WF6's. Bolts must be stainless steel or hot dip galvanized high strength per IDOT specifications.

(6) Based on actual height of tallest sign given on OS-A-1.

OS-A-10-DMS 2-17-2017

MODEL: Default
FILE NAME: c:\pwworkdir\benesch projects\projects\d0183649\D264C24-SHT-010-Span Alum Walkway DMS Details.dgn
2/9/2025 2:47:53 PM

QUIGG ENGINEERING INC

USER NAME = JCray	DESIGNED - ZLD	REVISED -	
D264C24-SHT-010-Span Alum Walkway DMS Details	CHECKED - KWB	REVISED -	
PLOT SCALE = 0.1667 ' / in.	DRAWN - ZLD	REVISED -	
PLOT DATE = 2/10/2025	CHECKED - MDC	REVISED -	

STATE OF ILLINOIS
DEPARTMENT OF TRANSPORTATION

OVERHEAD SIGN STRUCTURES
ALTERNATE ALUMINUM WALKWAY DETAILS FOR DMS

SHEET 10 OF 25 SHEETS

F.A.I. RTE.	SECTION	COUNTY	TOTAL SHEETS	SHEET NO.
39	(201-3)R & (4-1.5)R	WINNEBAGO	1685	440

CONTRACT NO. 64C24

ILLINOIS FED. AID PROJECT

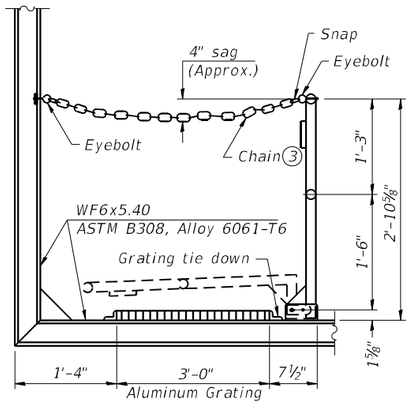

SIDE ELEVATION

(Showing safety chain w/o sign)

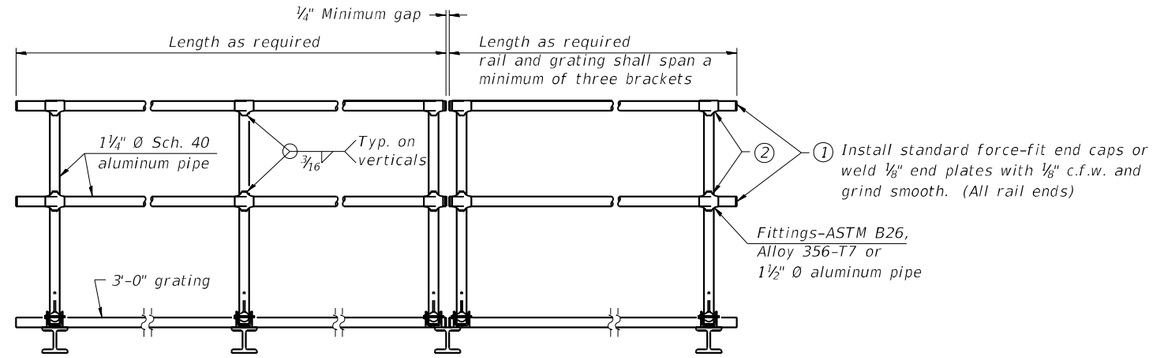

FRONT ELEVATION

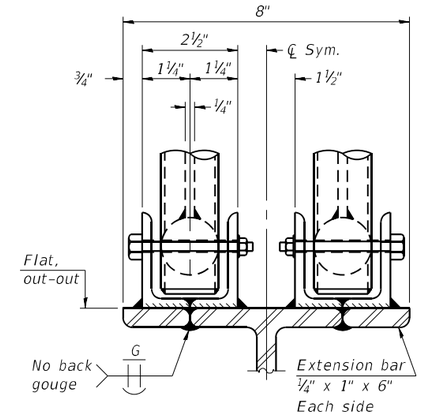

ELEVATION AT HANDRAIL JOINT (4)

HANDRAIL DETAILS

Handrail pipe shall be ASTM B241, Alloy 6063-T6 or Alloy 6061-T6.

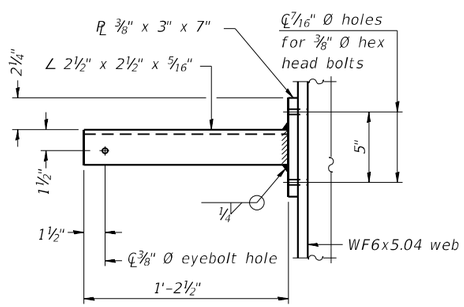

SECTION P-P

(2) Horizontal handrail member shall be continuous thru fitting. Provide 7/16" Ø hole in fitting for ⅜" Ø bolt. Field drill 7/16" Ø hole in horizontal rail member. Provide washer and locknut for bolt. (Use 5/16" eyebolts in 7/16" Ø holes on top rail at ends only.)

(3) 3/16" type 304L stainless steel chain, approximately 12 links per foot.

(4) Extrusions may be used in lieu of the details shown, with approval of the Engineer.

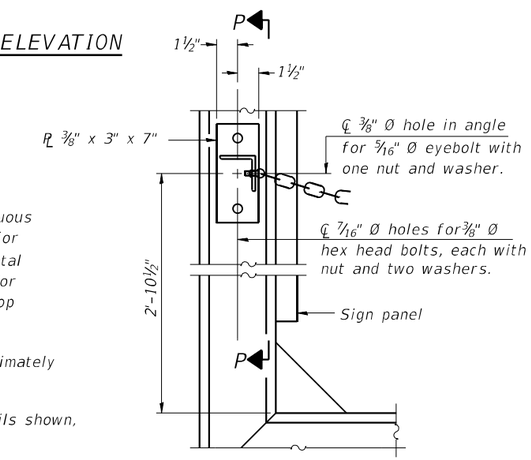

ALTERNATE SAFETY CHAIN ATTACHMENT

(With Sign Present)
Items not shown same as "Side Elevation" of "Handrail Details"

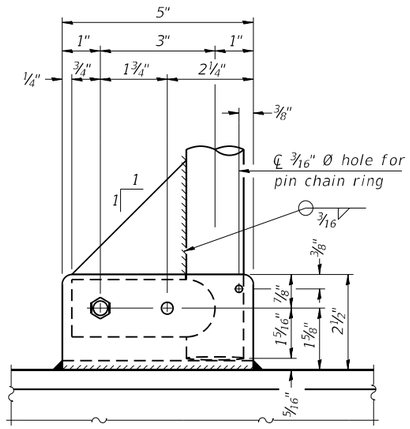

SIDE ELEVATION

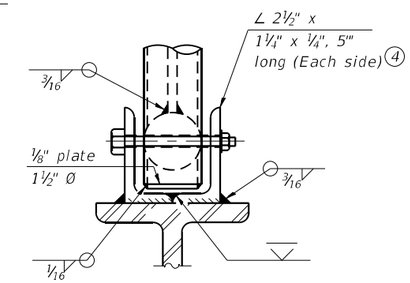

FRONT ELEVATION

See "ELEVATION" at right for dimensions.

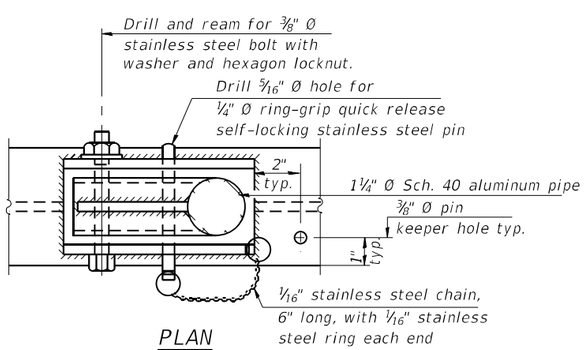

PLAN
DETAIL E HANDRAIL HINGE

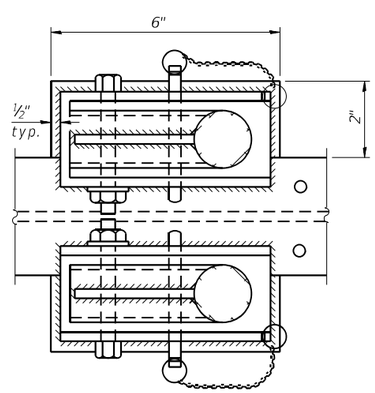

PLAN AT HANDRAIL JOINT

Details not shown same as "PLAN"

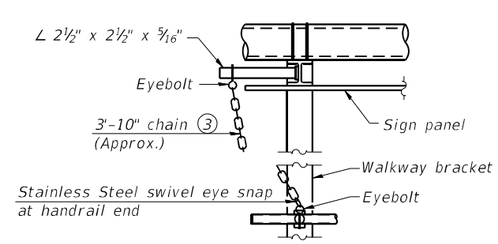

ALTERNATE SAFETY CHAIN ATTACHMENT

Details not shown similar to "Safety Chain" Details
(Walkway omitted for clarity)

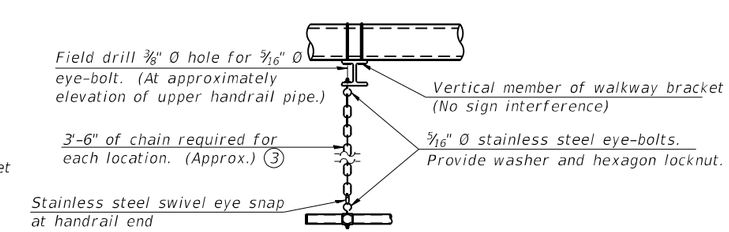

SAFETY CHAIN

One required for each end of each walkway.

MODEL: Default
FILE NAME: c:\pwworkdir\benesch projects\projects\d0183649\D264C24-SHT-011-Span Alum Handrail DMS Details.dgn

OS-A-11-DMS 2-17-2017

QUIGG ENGINEERING INC

USER NAME = JCray	DESIGNED - ZLD	REVISED -	
D264C24-SHT-011-Span Alum Handrail DMS Details.dgn	CHECKED - KWB	REVISED -	
PLOT SCALE = 0.1667 ' / in.	DRAWN - ZLD	REVISED -	
PLOT DATE = 2/10/2025	CHECKED - MDC	REVISED -	

STATE OF ILLINOIS
DEPARTMENT OF TRANSPORTATION

OVERHEAD SIGN STRUCTURES
ALTERNATE ALUMINUM HANDRAIL DETAILS FOR DMS

SHEET 11 OF 25 SHEETS

F.A.I. RTE.	SECTION	COUNTY	TOTAL SHEETS	SHEET NO.
39	(201-3)R & (4-1,5)R	WINNEBAGO	1685	441

CONTRACT NO. 64C24

ILLINOIS FED. AID PROJECT

2/9/2025 2:48:06 PM

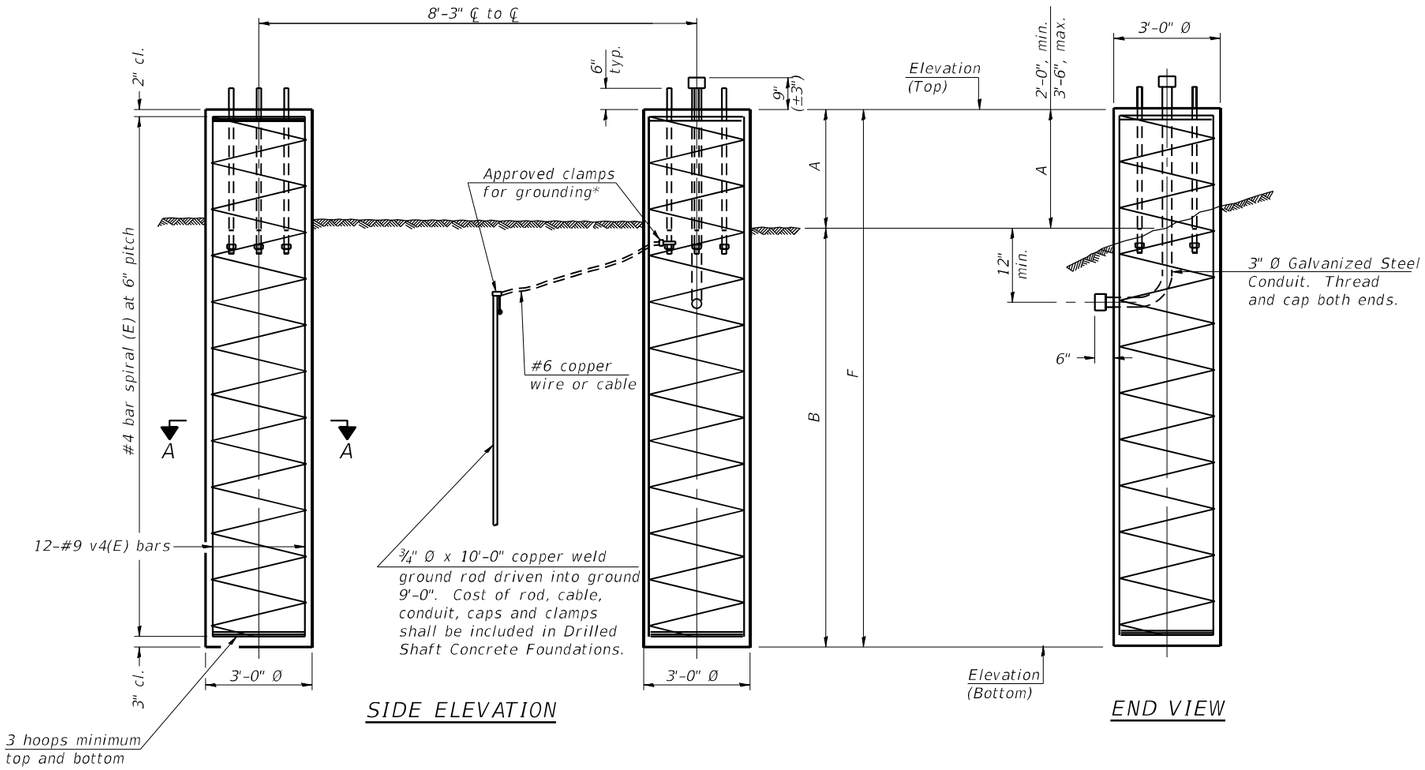

SIDE ELEVATION

END VIEW

BAR LIST - EACH FOUNDATION

Bar	Number	Size	Length	Shape
v4(E)	24	#9	F less 5"	———
#4 bar spiral (E) - see Side Elevation				

NOTES:

The foundation dimensions shown are based on the presence of mostly cohesive soils with an average Unconfined Compressive Strength (Qu) of at least 1.25 tsf, which must be determined by previous soil investigations at the jobsite. When other conditions are indicated, the boring data will be included in the plans and the foundation dimensions shown will be the result of site specific designs.

If the conditions encountered are different than those indicated, the Contractor shall notify the Engineer to determine if the foundation dimensions need to be modified. If dimensions "B" or "F" are revised by more than 12" by the Contractor, "as-built" plans shall be prepared and submitted to the District Bureau of Operations for future reference.

No sonotubes or decomposable forms shall be used below the lower conduit entrance.

Permanent metal forms or other shielding may not be left in place below that elevation without the Engineer's written permission.

Concrete shall be placed monolithically, without construction joints.

Backfill shall be placed per Article 502 of Standard Specification and prior to erection of support column.

A normal surface finish followed by a Concrete Sealer application will be required on concrete surfaces above the lowest elevation 6" below finished ground line. Cost included in Drilled Shaft Concrete Foundation.

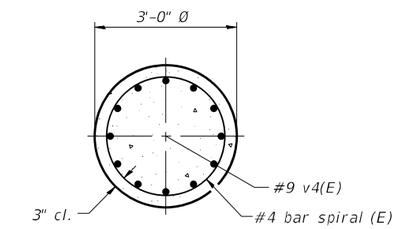

SECTION A-A

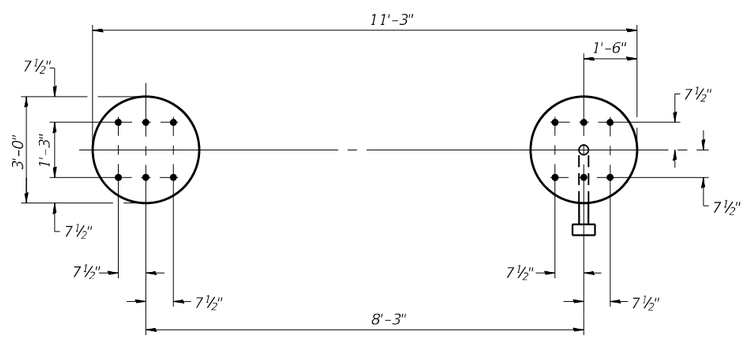

PLAN

For anchor rod size and placement, see Support Frame Detail Sheet.

* Anchor rod shall be ground or filed to bright metal at clamp and cable connection location.

DETAILS FOR 10" Ø SUPPORT FRAME TYPE I-A or II-A TRUSS

Structure Number	Station	Left Foundation					Right Foundation					Class DS Concrete (Cu. Yds.)
		Elevation Top	Elevation Bottom	A	B	F	Elevation Top	Elevation Bottom	A	B	F	
2S101I39L120.1	2630+80	-	-	-	-	-	795.87	777.37	3'-6"	15'-0"	18'-6"	9.7
2S101I39R120.4	2644+50	-	-	-	-	-	797.74	776.74	3'-6"	17'-0"	21'-0"	11.0
2S101I39L120.6	2657+00	-	-	-	-	-	786.51	766.51	3'-6"	16'-6"	20'-0"	10.5
2S101I39R120.9	2673+00	-	-	-	-	-	788.95	764.95	3'-6"	20'-6"	24'-0"	12.6
2S101I39L121.0	2679+00	-	-	-	-	-	792.84	772.84	3'-6"	16'-6'	20'-0"	10.5
2S101I39R121.4	2699+95	-	-	-	-	-	769.10	745.10	3'-6"	20'-6"	24'-0"	12.6
2S101I39L121.6	2707+00	-	-	-	-	-	761.72	732.22	3'-6"	26'-0"	29'-6"	15.5

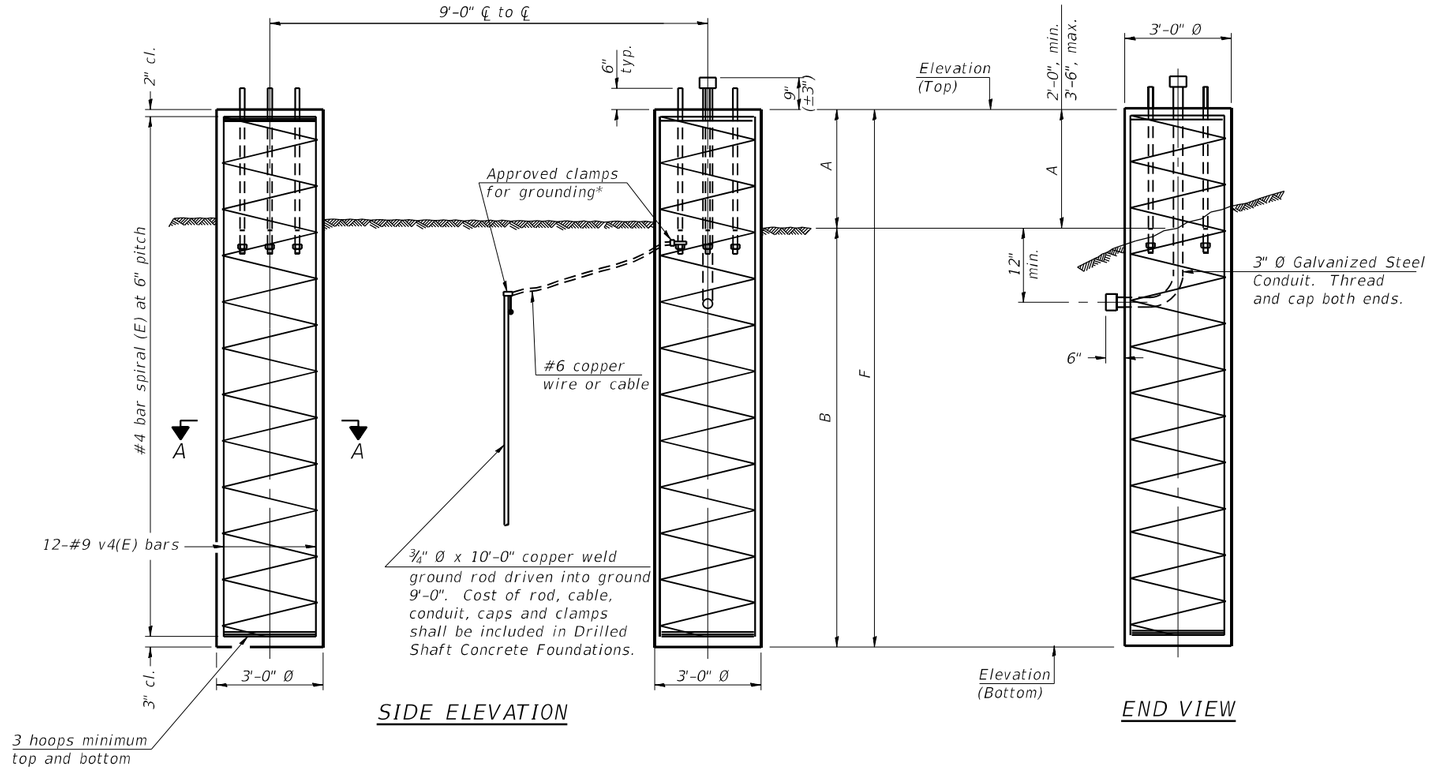

SIDE ELEVATION

END VIEW

BAR LIST - EACH FOUNDATION

Bar	Number	Size	Length	Shape
v4(E)	24	#9	F less 5"	———
#4 bar spiral (E) - see Side Elevation				

NOTES:

The foundation dimensions shown are based on the presence of mostly cohesive soils with an average Unconfined Compressive Strength (Qu) of at least 1.25 tsf, which must be determined by previous soil investigations at the jobsite. When other conditions are indicated, the boring data will be included in the plans and the foundation dimensions shown will be the result of site specific designs.

If the conditions encountered are different than those indicated, the Contractor shall notify the Engineer to determine if the foundation dimensions need to be modified. If dimensions "B" or "F" are revised by more than 12" by the Contractor, "as-built" plans shall be prepared and submitted to the District Bureau of Operations for future reference.

No sonotubes or decomposable forms shall be used below the lower conduit entrance.

Permanent metal forms or other shielding may not be left in place below that elevation without the Engineer's written permission.

Concrete shall be placed monolithically, without construction joints.

Backfill shall be placed per Article 502 of Standard Specification and prior to erection of support column.

A normal surface finish followed by a Concrete Sealer application will be required on concrete surfaces above the lowest elevation 6" below finished ground line. Cost included in Drilled Shaft Concrete Foundation.

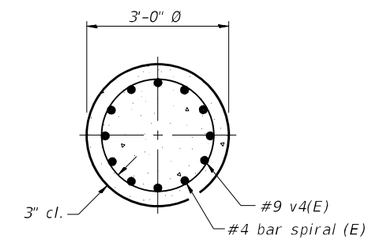

SECTION A-A

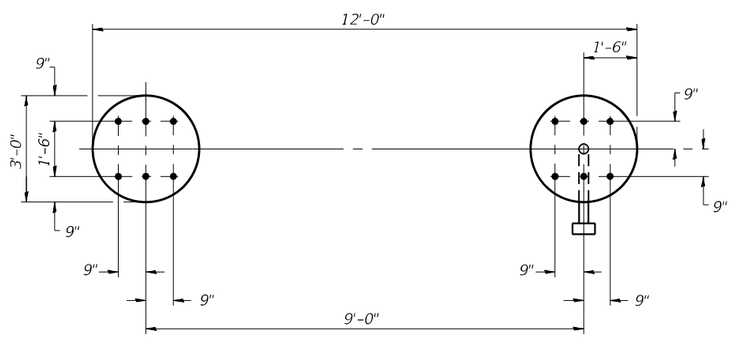

PLAN

For anchor rod size and placement, see Support Frame Detail Sheet.

* Anchor rod shall be ground or filed to bright metal at clamp and cable connection location.

DETAILS FOR 12" Ø SUPPORT FRAME TYPE III-A TRUSS

Structure Number	Station	Left Foundation					Right Foundation					Class DS Concrete (Cu. Yds.)
		Elevation Top	Elevation Bottom	A	B	F	Elevation Top	Elevation Bottom	A	B	F	
2S1011039L121.2	2686+50	-	-	-	-	-	790.42	756.92	3'-6"	30'-0"	33'-6"	17.6

0S4-F4 2-17-2017

MODEL: Default
FILE NAME: c:\pwworking\benesch projects\projects\d0183649\D264C24-SHT-013-Span 12in Pipe Drilled Shaft.dgn

QUIGG ENGINEERING INC

USER NAME = JCray	DESIGNED - ZLD	REVISED -	
D264C24-SHT-013-Span 12in Pipe Drilled Shaft.dgn	CHECKED - KWB	REVISED -	
PLOT SCALE = 0.1667 ' / in.	DRAWN - ZLD	REVISED -	
PLOT DATE = 2/10/2025	CHECKED - MDC	REVISED -	

STATE OF ILLINOIS
DEPARTMENT OF TRANSPORTATION

OVERHEAD SIGN STRUCTURES
DRILLED SHAFT DETAILS

SHEET 13 OF 25 SHEETS

F.A.I. RTE.	SECTION	COUNTY	TOTAL SHEETS	SHEET NO.
39	(201-3)R & (4-1.5)R	WINNEBAGO	1685	443
		CONTRACT NO. 64C24		
	ILLINOIS	FED. AID PROJECT		

2/9/2025 2:48:30 PM

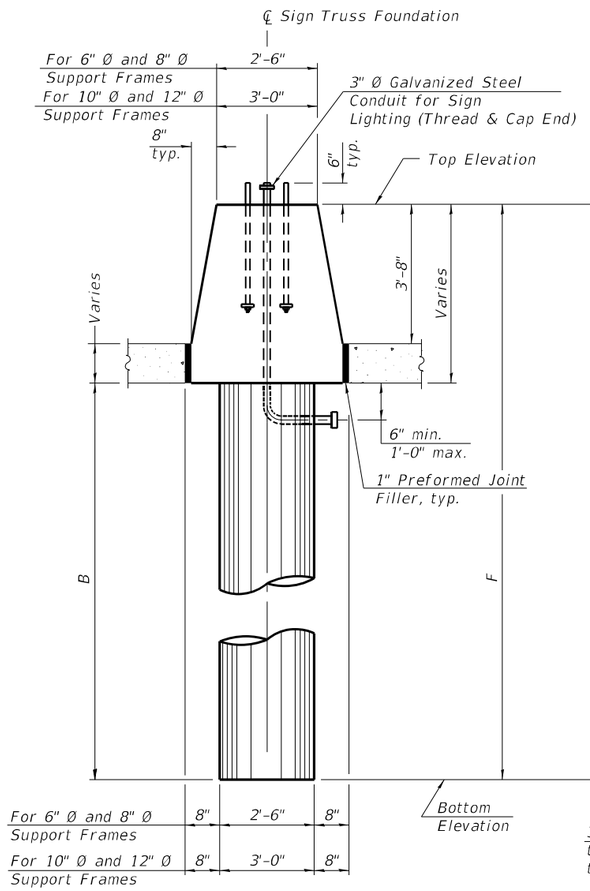

END VIEW

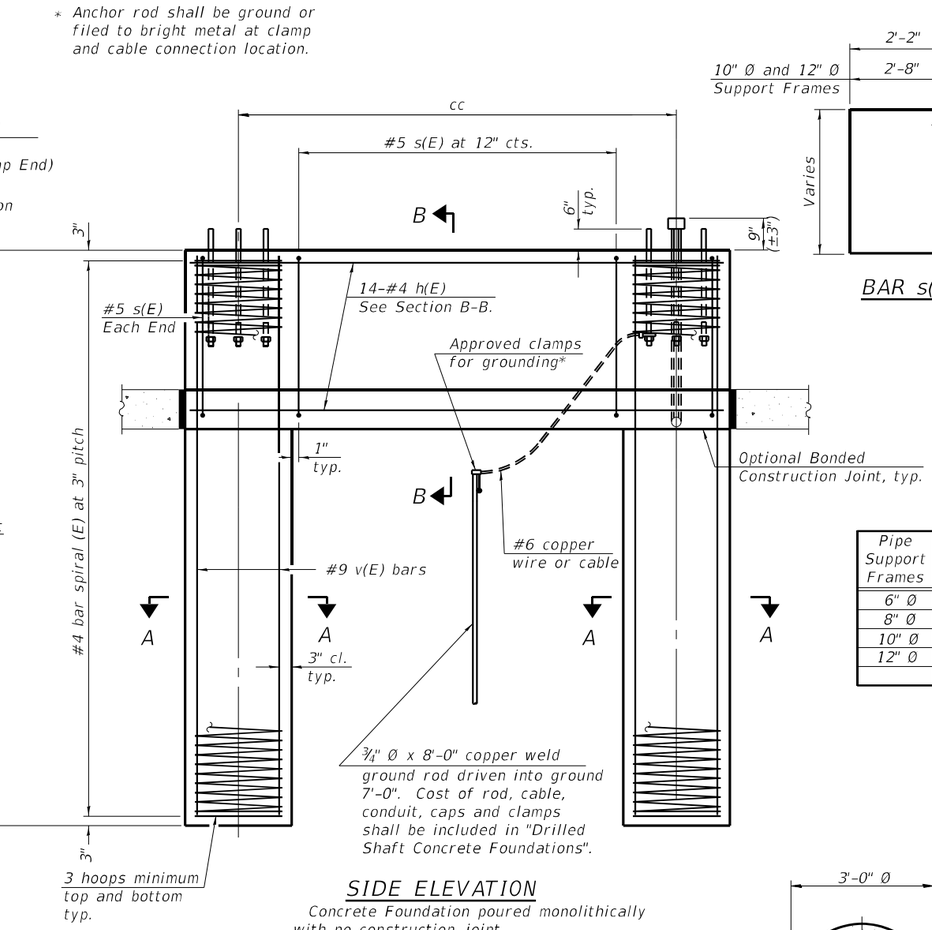

SIDE ELEVATION

Concrete Foundation poured monolithically with no construction joint.

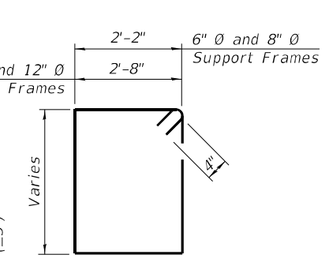

BAR s(E)

NOTES:

The foundation dimensions shown are based on the presence of mostly cohesive soils with an average Unconfined Compressive Strength (Qu) of at least 1.25 tsf, which must be determined by previous soil investigations at the jobsite. When other conditions are indicated, the boring data will be included in the plans and the foundation dimensions shown will be the result of site specific designs.

If the conditions encountered are different than those indicated, the Contractor shall notify the Engineer to determine if the foundation dimensions need to be modified. If dimensions "B" or "F" are revised by more than 12" by the Contractor, "as-built" plans shall be prepared and submitted to the District Bureau of Operations for future reference.

No sonotubes or decomposable forms shall be used below the lower conduit entrance.

Permanent metal forms or other shielding may not be left in place below that elevation without the Engineer's written permission.

Concrete shall be placed monolithically, without construction joints.

Backfill shall be placed per Article 502 of Standard Specification and prior to erection of support column.

A normal surface finish followed by a Concrete Sealer application will be required on concrete surfaces above the lowest elevation 6" below finished ground line. Cost included in Drilled Shaft Concrete Foundation.

BAR LIST - EACH FOUNDATION

Bar	Number	Size	Length	Shape	
h(E)	14	#4	M less 4"	——	
s(E)	Varies	#5	Varies	□	6" Ø and 8" Ø Support Frame
v(E)	16	#9	F less 0'-5"	——	10" Ø and 12" Ø Support Frame
v(E)	24	#9	F less 0'-5"	——	
#4(E) bar spiral. See Side Elevation					

Pipe Support Frames	cc	M	a	a/2
6" Ø	7'-0"	9'-6"	0'-11"	5½"
8" Ø	7'-6"	10'-0"	1'-1½"	6¾"
10" Ø	8'-3"	11'-3"	1'-3"	7½"
12" Ø	9'-0"	12'-0"	1'-6"	9"

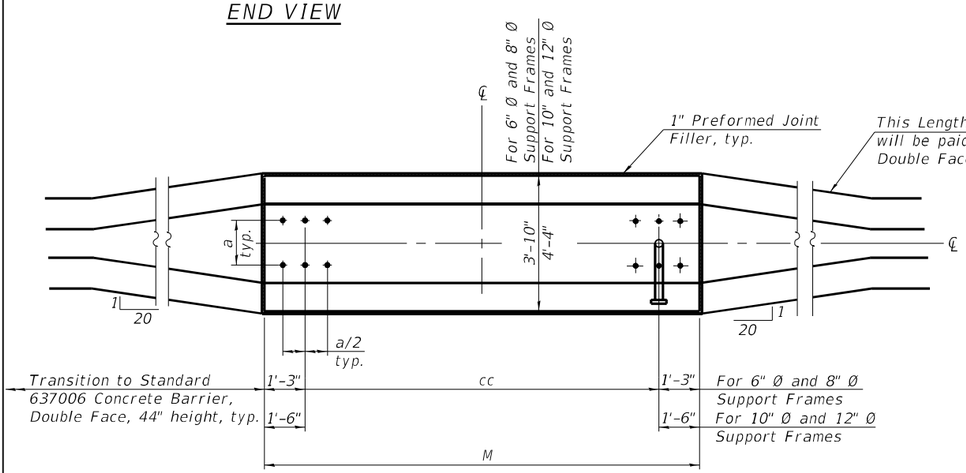

PLAN

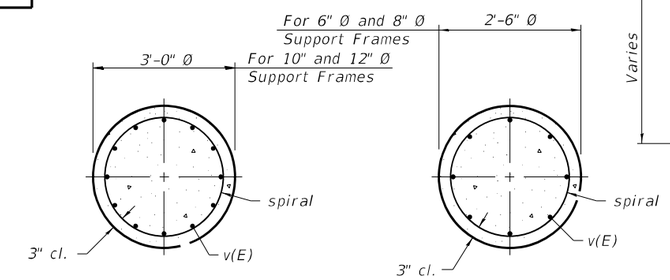

SECTION A-A

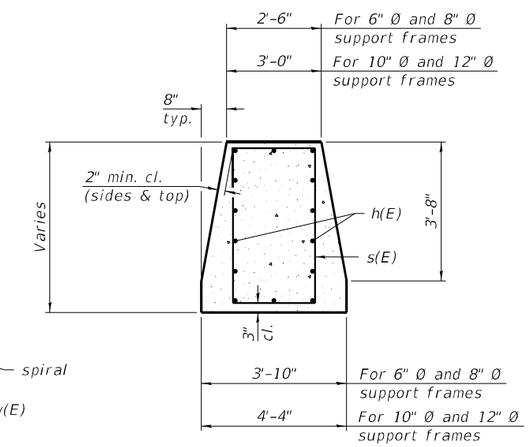

SECTION B-B

Structure Number	Station	Left Foundation				Right Foundation				Class DS Concrete (Cu. Yds.)
		Elevation Top	Elevation Bottom	B	F	Elevation Top	Elevation Bottom	B	F	
2S101I039L120.1	2630+80	797.66	776.74	15'-0"	20'-11"	-	-	-	-	17.6
2S101I039R120.4	2644+50	803.14	779.72	17'-6"	23'-5"	-	-	-	-	18.9
2S101I039L120.6	2657+00	795.18	772.76	16'-6"	22'-5"	-	-	-	-	18.4
2S101I039R120.9	2673+00	793.84	767.42	20'-6"	26'-5"	-	-	-	-	20.4
2S101I039L121.0	2679+00	798.52	776.10	16'-6"	22'-5"	-	-	-	-	18.4
2S101I039L121.2	2686+50	797.56	761.64	30'-0"	35'-11"	-	-	-	-	26.1
2S101I039R121.4	2699+95	771.56	745.14	20'-6"	26'-5"	-	-	-	-	20.4
2S101I039L121.6	2707+00	767.07	735.15	26'-0"	31'-11"	-	-	-	-	23.3

0S4-MED 4-1-2020

MODEL: Default
FILE NAME: c:\pwworkdir\benesch projects\projects\d0183649\D264C24-SHT-014-Span Median Drilled Shaft.dgn

QUIGG ENGINEERING INC

USER NAME = JCray	DESIGNED - ZLD	REVISED -	
D264C24-SHT-014-Span Median Drilled Shaft.dgn	CHECKED - KWB	REVISED -	
PLOT SCALE = 0.1667 ' / in.	DRAWN - ZLD	REVISED -	
PLOT DATE = 2/10/2025	CHECKED - MDC	REVISED -	

STATE OF ILLINOIS
DEPARTMENT OF TRANSPORTATION

OVERHEAD SIGN STRUCTURES
MEDIAN SUPPORT FOUNDATION DETAILS

SHEET 14 OF 25 SHEETS

F.A.I. RTE.	SECTION	COUNTY	TOTAL SHEETS	SHEET NO.
39	(201-3)R & (4-1,5)R	WINNEBAGO	1685	444
		CONTRACT NO. 64C24		
		ILLINOIS	FED. AID PROJECT	

2/9/2025 2:48:42 PM

Illinois Department of Transportation
Division of Highways
IDOT

SOIL BORING LOG

Page 1 of 1

Date 1/4/24

ROUTE FAI 39 DESCRIPTION P92-111-06 - Various sign trusses on Bypass 20 LOGGED BY W. Garza

SECTION (201-3)K LOCATION Cherry Valley, NE 1/4 10, SE 1/4 3, SW 1/4, N 1/2 2, SEC. , TWP. 43N, RNG. 2E

COUNTY Winnebago DRILLING METHOD Hollow Stem Auger HAMMER TYPE CME-75 Automatic

STRUCT. NO.
Station

Latitude 42° 14' 02.34" Longitude -88° 58' 17.16"
Northing 2,030,056.7008 Easting 2,620,262.1995

BORING NO. ST-2
Station 2699+95
Offset 10.00ft Rt of CL
Ground Surface Elev. 768.10 ft

Surface Water Elev. ft
Stream Bed Elev. ft

Groundwater Elev.:
First Encounter 743.6 ft ▼
Upon Completion 743.6 ft ▽
After Hrs. ft

Description	Elev.	DEPTH (ft)	BLOWS (/6")	UCS Qu (tsf)	MOIST (%)
12" Concrete Crossover	767.10				
MEDIUM brown LOAM	766.10			0.6 P	12.0
MEDIUM brown SANDY LOAM	764.60		5 3 5	0.8 B	17.0
MEDIUM light brown SILTY CLAY LOAM		-5	2 3 5	0.8 B	24.0
5' Run	762.10				
MEDIUM tan SANDY LOAM		-10	7 6 6	0.9 P	9.0
5' Run	757.10				
STIFF tan SANDY LOAM Very little recovery		-15	18 19 26	1.1 P	10.0
5' Run	752.10				
		-20	16		

Description	Elev.	DEPTH (ft)	BLOWS (/6")	UCS Qu (tsf)	MOIST (%)
HARD tan SANDY LOAM TILL			16 18	6.6 S	8.0
5' Run *(continued)*	745.60				
DENSE tan FINE SAND	742.10	-25	11 15 22		20.0
End of Boring		-30			
		-35			
		-40			

Northing and Easting were calculated using the ILHP-WF coordinate system

The Unconfined Compressive Strength (UCS) Failure Mode is indicated by (B-Bulge, S-Shear, P-Penetrometer)
The SPT (N value) is the sum of the last two blow values in each sampling zone (AASHTO T206)

BBS, from 137 (Rev. 8-99)

Illinois Department of Transportation
Division of Highways
IDOT

SOIL BORING LOG

Page 1 of 1

Date 1/4/24

ROUTE FAI 39 DESCRIPTION P92-111-06 - Various sign trusses, Mulford Rd. and Harrison Ave. LOGGED BY W. Garza

SECTION (201-3)K LOCATION Cherry Valley, NE 1/4 10, SE 1/4 3, SW 1/4, N 1/2 2, SEC. , TWP. 43N, RNG. 2E

COUNTY Winnebago DRILLING METHOD Hollow Stem Auger HAMMER TYPE CME-75 Automatic

STRUCT. NO.
Station

Latitude 42° 13' 52.19" Longitude -88° 58' 28.55"
Northing 2,029,018.1360 Easting 2,619,419.1688

BORING NO. ST-4
Station 2686+50
Offset 5.00ft Rt of CL
Ground Surface Elev. 791.50 ft

Surface Water Elev. ft
Stream Bed Elev. ft

Groundwater Elev.:
First Encounter None ft
Upon Completion Dry ft
After Hrs. ft

Description	Elev.	DEPTH (ft)	BLOWS (/6")	UCS Qu (tsf)	MOIST (%)
Asphalt Concrete	790.50				
CA 11/CA 10				0.3 P	20.0
SOFT gray SILTY CLAY LOAM	789.50				
STIFF gray SANDY CLAY LOAM	788.00		1 3 5	1.4 B	21.0
VERY STIFF light brown CLAY LOAM		-5	3 4 6	2.3 B	24.0
5' Run	785.50				
STIFF gray SANDY LOAM		-10	6 5 7	1.5 P	18.0
5' Run	780.50				
VERY STIFF gray/brown CLAY LOAM TILL		-15	4 5 7	3.7 B	17.0
5' Run	775.50				
		-20	15		

Description	Elev.	DEPTH (ft)	BLOWS (/6")	UCS Qu (tsf)	MOIST (%)
STIFF gray SILTY LOAM			13 8	1.8 P	21.0
5' Run *(continued)*	770.50				
STIFF brown SANDY LOAM	765.50	-25	7 5 7	1.8 S	14.0
End of Boring		-30			
		-35			
		-40			

Northing and Easting were calculated using the ILHP-WF coordinate system

The Unconfined Compressive Strength (UCS) Failure Mode is indicated by (B-Bulge, S-Shear, P-Penetrometer)
The SPT (N value) is the sum of the last two blow values in each sampling zone (AASHTO T206)

BBS, from 137 (Rev. 8-99)

Illinois Department of Transportation
Division of Highways
IDOT

SOIL BORING LOG

Page 1 of 1

Date 1/5/24

ROUTE FAI 39 DESCRIPTION P92-111-06 - Various sign trusses, Mulford Rd. and Harrison Ave. LOGGED BY W. Garza

SECTION (201-3)K LOCATION Cherry Valley, NE 1/4 10, SE 1/4 3, SW 1/4, N 1/2 2, SEC. , TWP. 43N, RNG. 2E

COUNTY Winnebago DRILLING METHOD Hollow Stem Auger HAMMER TYPE CME-75 Automatic

STRUCT. NO.
Station

Latitude 42° 14' 01.61" Longitude -88° 58' 16.00"
Northing 2,029,984.3120 Easting 2,620,350.4333

BORING NO. ST-6
Station 2699+95
Offset 120.00ft Rt of CL
Ground Surface Elev. 766.20 ft

Surface Water Elev. ft
Stream Bed Elev. ft
Groundwater Elev.:
First Encounter 741.7 ft ▼
Upon Completion 741.7 ft ▽
After Hrs. ft

Description	Elev.	DEPTH (ft)	BLOWS (/6")	UCS Qu (tsf)	MOIST (%)
VERY SOFT brown SANDY LOAM	764.20			0.2 P	16.0
MEDIUM light brown LOAM with SAND LENS	762.70		2 2 3	0.6 P	26.0
VERY STIFF tan SANDY LOAM TILL 5' Run	760.20	-5	5 5 7	2.1 P	8.0
STIFF tan SANDY LOAM TILL 5' Run	755.20	-10	5 7 9	1.7 S	9.0
HARD tan SANDY LOAM TILL 5' Run	748.20	-15	12 16 19	5.0 S	8.0
		-20	19		
DENSE tan MEDIUM SAND 5' Run *(continued)*	743.20		23 24		4.0
VERY DENSE tan WEATHERED LIMESTONE	740.20	-25	100 for 6"		14.0
End of Boring		-30			
		-35			
		-40			

Northing and Easting were calculated using the ILHP-WF coordinate system

The Unconfined Compressive Strength (UCS) Failure Mode is indicated by (B-Bulge, S-Shear, P-Penetrometer)
The SPT (N value) is the sum of the last two blow values in each sampling zone (AASHTO T206)

BBS, from 137 (Rev. 8-99)

Illinois Department of Transportation
Division of Highways
IDOT

SOIL BORING LOG

Page 1 of 1

Date 1/5/24

ROUTE FAI 39 DESCRIPTION P92-111-06 - Various sign trusses, Mulford Rd. and Harrison Ave. LOGGED BY W. Garza

SECTION (201-3)K LOCATION Cherry Valley, NE 1/4 10, SE 1/4 3, SW 1/4, N 1/2 2, SEC. , TWP. 43N, RNG. 2E

COUNTY Winnebago DRILLING METHOD Hollow Stem Auger HAMMER TYPE CME-75 Automatic

STRUCT. NO.
Station

Latitude 42° 13' 52.77" Longitude -88° 58' 29.54"
Northing 2,029,075.7691 Easting 2,619,344.1428

BORING NO. ST-7
Station 2686+50
Offset 90.00ft Lt
Ground Surface Elev. 773.50 ft

Surface Water Elev. ft
Stream Bed Elev. ft
Groundwater Elev.:
First Encounter None ft
Upon Completion Dry ft
After Hrs. ft

Description	Elev.	DEPTH (ft)	BLOWS (/6")	UCS Qu (tsf)	MOIST (%)
MEDIUM brown SILTY CLAY LOAM	771.50			0.8 P	23.0
STIFF light brown SILTY CLAY LOAM	770.00		3 4 4	1.0 B	28.0
VERY SOFT brown SANDY LOAM 5' Run	767.50	-5	4 4 3	0.2 B	17.0
VERY STIFF tan SANDY LOAM TILL 5' Run	762.50	-10	5 8 8	2.1 P	8.0
VERY DENSE tan SANDY LOAM TILL 5' Run Hard drilling	757.50	-15	24 31 38		7.0
		-20	27		
VERY DENSE tan SANDY LOAM TILL	752.50		47 53		7.0
5' Run Hard drilling *(continued)*					
VERY DENSE gray SANDY LOAM TILL (gravel)	747.50	-25	100 for 1"		
End of Boring		-30			
		-35			
		-40			

Northing and Easting were calculated using the ILHP-WF coordinate system

The Unconfined Compressive Strength (UCS) Failure Mode is indicated by (B-Bulge, S-Shear, P-Penetrometer)
The SPT (N value) is the sum of the last two blow values in each sampling zone (AASHTO T206)

BBS, from 137 (Rev. 8-99)

MODEL: Default
FILE NAME: c:\pwworkdir\benesch projects\pw_projects\d0183649\D264C24-SHT-016-Span Boring.dgn
2/9/2025 2:49:35 PM

QUIGG ENGINEERING INC

USER NAME = JCray	DESIGNED - ZLD	REVISED -	
D264C24-SHT-016-Span Boring.dgn	CHECKED - KWB	REVISED -	
PLOT SCALE = 0.1667 ' / in.	DRAWN - ZLD	REVISED -	
PLOT DATE = 2/10/2025	CHECKED - MDC	REVISED -	

STATE OF ILLINOIS
DEPARTMENT OF TRANSPORTATION

SOIL BORING LOGS
OVERHEAD SIGN STRUCTURES

SHEET 16 OF 25 SHEETS

F.A.I. RTE.	SECTION	COUNTY	TOTAL SHEETS	SHEET NO.
39	(201-3)R & (4-1,5)R	WINNEBAGO	1685	446
		CONTRACT NO. 64C24		
	ILLINOIS	FED. AID PROJECT		

Illinois Department of Transportation
Division of Highways
IDOT

SOIL BORING LOG

Date 4/23/08

ROUTE FAP 301 DESCRIPTION P92-111-06 Box Culvert over Madigan Creek on Bypass 20 LOGGED BY W. Garza

SECTION (201-3), K (4-1, 5) K LOCATION Cherry Valley Twp. - 2 NW, SEC. , TWP. 43N, RNG. 2E

COUNTY Winnebago DRILLING METHOD Hollow Stem Auger HAMMER TYPE CME-45 Automatic

STRUCT. NO.
Station

Latitude
Longitude

Northing
Easting

BORING NO. B-1d
Station 2708+87
Offset 186.00ft Lt CL
Ground Surface Elev. 739.13 ft

Surface Water Elev. 74.50 ft
Stream Bed Elev. 73.00 ft

Groundwater Elev.:
First Encounter 734.6 ft ▼
Upon Completion Wash ft
After ____ Hrs. ____ ft

Description	Elev.	DEPTH (ft)	BLOWS (/6")	UCS Qu (tsf)	MOIST (%)
SOFT dark gray LOAM	737.13			0.4 P	22.0
MEDIUM dark gray SANDY LOAM	735.13		2 2 4	0.6 P	20.0
MEDIUM tan SAND with medium GRAVEL	733.13	-5	5 9 8		
LOOSE/MEDIUM tan SAND	730.63		5 6 4		
Wash LOOSE tan dirty SAND	727.63	-10	3 4 8		
STIFF tan/gray SILT	725.63		6 9 7	1.4 S	21.0
MEDIUM gray SILT	723.13	-15	3 4 6	0.7 B	17.0
MEDIUM gray SILT	720.63		3 4 5	0.6 B	16.0
		-20	2		
MEDIUM gray SILT with fine SAND lens *(continued)*	718.13		3 4	0.8 P	19.0
STIFF gray SILTY CLAY TILL	715.13		13 11 8	1.1 P	18.0
VERY DENSE tan weathered LIMESTONE	713.13	-25	21 25 22		
Wash VERY DENSE tan weathered LIMESTONE	710.63		100/5"		
End of Boring		-30			
		-35			
		-40			

The Unconfined Compressive Strength (UCS) Failure Mode is indicated by (B-Bulge, S-Shear, P-Penetrometer)
The SPT (N value) is the sum of the last two blow values in each sampling zone (AASHTO T206)

BBS, from 137 (Rev. 8-99)

Illinois Department of Transportation
Division of Highways
IDOT

SOIL BORING LOG

Date 4/22/08

ROUTE FAP 301 DESCRIPTION P92-111-06 Box Culvert over Madigan Creek on Bypass 20 LOGGED BY W. Garza

SECTION (201-3), K (4-1, 5) K LOCATION Cherry Valley Twp. - 2 NW, SEC. , TWP. 43N, RNG. 2E

COUNTY Winnebago DRILLING METHOD Hollow Stem Auger HAMMER TYPE CME-45 Automatic

STRUCT. NO.
Station

Latitude
Longitude

Northing
Easting

BORING NO. B-2d
Station 2707+77
Offset 156.00ft Rt CL
Ground Surface Elev. 737.15 ft

Surface Water Elev. 74.50 ft
Stream Bed Elev. 73.00 ft

Groundwater Elev.:
First Encounter 724.7 ft ▼
Upon Completion 722.2 ft ▽
After ____ Hrs. ____ ft

Description	Elev.	DEPTH (ft)	BLOWS (/6")	UCS Qu (tsf)	MOIST (%)
MEDIUM dark gray LOAM	735.15			0.5 P	13.0
MEDIUM dark gray dirty SAND & GRAVEL	733.15		2 13 10		
STIFF tan SANDY LOAM TILL	731.15	-5	2 9 6	1.4 P	10.0
STIFF tan SANDY LOAM TILL	728.65		6 11 15	1.0 S	9.0
STIFF gray SANDY LOAM TILL	726.15	-10	5 7 8	1.7 S	8.0
VERY STIFF gray LOAM TILL	723.65		3 5 9	2.7 B	8.0
STIFF gray LOAM TILL	721.15	-15	6 9 11	1.8 S	8.0
HARD gray LOAM TILL	718.15		8 10 17	4.6 S	8.0
		-20	4		
MEDIUM gray clean medium coarse SAND *(continued)*	715.65		10 12		
HARD gray LOAM TILL	713.65		12 17 18	4.6 S	8.0
HARD gray LOAM TILL	711.15	-25	11 18 19	6.3 S	8.0
End of Boring					
		-30			
		-35			
		-40			

The Unconfined Compressive Strength (UCS) Failure Mode is indicated by (B-Bulge, S-Shear, P-Penetrometer)
The SPT (N value) is the sum of the last two blow values in each sampling zone (AASHTO T206)

BBS, from 137 (Rev. 8-99)

MODEL: Default
FILE NAME: c:\pwworkdir\benesch projects\projects\d0183649\D264C24-SHT-017-Span Boring.dgn

QUIGG ENGINEERING INC

USER NAME = JCray	DESIGNED - ZLD	REVISED -	
D264C24-SHT-017-Span Boring.dgn	CHECKED - KWB	REVISED -	
PLOT SCALE = 0.1667 ' / in.	DRAWN - ZLD	REVISED -	
PLOT DATE = 2/10/2025	CHECKED - MDC	REVISED -	

STATE OF ILLINOIS
DEPARTMENT OF TRANSPORTATION

SOIL BORING LOGS
OVERHEAD SIGN STRUCTURES

SHEET 17 OF 25 SHEETS

F.A.I. RTE.	SECTION	COUNTY	TOTAL SHEETS	SHEET NO.
39	(201-3)R & (4-1,5)R	WINNEBAGO	1685	447

CONTRACT NO. 64C24

ILLINOIS | FED. AID PROJECT

2/9/2025 2:50:17 PM

Illinois Department of Transportation
Division of Highways
IDOT

SOIL BORING LOG

Date 8/3/20

ROUTE Bypass 20/I-39 DESCRIPTION P92-111-06 - Box culvert carrying US Bypass 20 over Madigan Creek LOGGED BY W. Garza

SECTION (201-3)K & (4-1,5)R LOCATION Cherry Valley, NW2, SEC. , TWP. 43N, RNG. 2E

COUNTY Winnebago DRILLING METHOD Hollow Stem Auger HAMMER TYPE CME-45 Automatic

STRUCT. NO.
Station

Latitude 42° 14' 09.53" Longitude -88° 58' 09.42"
Northing 2,030,793.3394 Easting 2,620,834.2092

BORING NO. B-3
Station 2709+25
Offset 14.00ft Lt of CL
Ground Surface Elev. 762.00 ft

Surface Water Elev. ft
Stream Bed Elev. ft

Groundwater Elev.:
First Encounter 732.5 ft ▼
Upon Completion 722.0 ft ▽
After ___ Hrs. ft

Description	Elev.	DEPTH (ft)	BLOWS (/6")	UCS Qu (tsf)	MOIST (%)
MEDIUM gray LOAM				0.8 P	13.0
	760.00				
HARD tan SANDY LOAM			7 7 9	4.5 P	10.0
	758.50				
VERY STIFF tan SANDY LOAM		-5	9 7 5	2.8 P	9.0
	756.00				
HARD tan SANDY LOAM			7 10 9	4.5 P	14.0
	753.50				
HARD tan SANDY LOAM		-10	9 11 14	4.5 P	10.0
	751.00				
HARD tan SANDY LOAM			10 8 8	4.0 P	8.0
	748.50				
VERY STIFF light brown CLAY LOAM		-15	6 6 9	3.5 B	23.0
	746.00				
MEDIUM gray SILTY CLAY LOAM with GRAVEL			4 4 9	0.8 P	23.0
	742.50				
DENSE tan FINE SAND		-20	15		
DENSE tan FINE SAND *(continued)*			16 16		
	741.00				
VERY DENSE tan moist SANDY GRAVEL			21 30 46		
	738.50				
DENSE tan moist SANDY GRAVEL		-25	13 22 21		
5' Run	736.00				
VERY STIFF tan SANDY LOAM TILL top 6" SANDY GRAVEL		-30	18 9 8	2.3 B	10.0
5' Run	731.00				
STIFF light gray SANDY LOAM TILL		-35	3 8 14	1.4 S	26.0
5' Run	726.00				
		-40	26		

Northing and Easting were calculated using the ILHP-WF coordinate system

The Unconfined Compressive Strength (UCS) Failure Mode is indicated by (B-Bulge, S-Shear, P-Penetrometer)
The SPT (N value) is the sum of the last two blow values in each sampling zone (AASHTO T206)

BBS, from 137 (Rev. 8-99)

Illinois Department of Transportation
Division of Highways
IDOT

SOIL BORING LOG

Date 8/3/20

ROUTE Bypass 20/I-39 DESCRIPTION P92-111-06 - Box culvert carrying US Bypass 20 over Madigan Creek LOGGED BY W. Garza

SECTION (201-3)K & (4-1,5)R LOCATION Cherry Valley, NW2, SEC. , TWP. 43N, RNG. 2E

COUNTY Winnebago DRILLING METHOD Hollow Stem Auger HAMMER TYPE CME-45 Automatic

STRUCT. NO.
Station

Latitude 42° 14' 09.53" Longitude -88° 58' 09.42"
Northing 2,030,793.3394 Easting 2,620,834.2092

BORING NO. B-3
Station 2709+25
Offset 14.00ft Lt of CL
Ground Surface Elev. 762.00 ft

Surface Water Elev. ft
Stream Bed Elev. ft

Groundwater Elev.:
First Encounter 732.5 ft ▼
Upon Completion 722.0 ft ▽
After ___ Hrs. ft

Description	Elev.	DEPTH (ft)	BLOWS (/6")	UCS Qu (tsf)	MOIST (%)
VERY STIFF gray SANDY LOAM TILL			27 24		12.0
	721.00				
5' Run *(continued)*					
VERY STIFF light gray SANDY LOAM TILL		-45	7 10 13	2.1 P	9.0
	716.00				
End of Boring		-50			
		-55			
		-60			

Northing and Easting were calculated using the ILHP-WF coordinate system

The Unconfined Compressive Strength (UCS) Failure Mode is indicated by (B-Bulge, S-Shear, P-Penetrometer)
The SPT (N value) is the sum of the last two blow values in each sampling zone (AASHTO T206)

BBS, from 137 (Rev. 8-99)

Illinois Department of Transportation
Division of Highways
IDOT

SOIL BORING LOG

Page 1 of 1

Date 8/4/20

ROUTE I-39/US Bypass 20 DESCRIPTION P92-111-06 - Proposed bike path under US 20, W of Madigan Creek LOGGED BY W. Garza

SECTION (201-3)K & (4-1,5)R LOCATION Cherry Valley, NW2, SEC. , TWP. 43N, RNG. 2E

COUNTY Winnebago DRILLING METHOD Hollow Stem Auger HAMMER TYPE CME-45 Automatic

STRUCT. NO. 101-0215
Station

Latitude 42° 14' 06.40"
Longitude -88° 58' 13.03"
Northing 2,030,472.4837
Easting 2,620,567.0446

BORING NO. B-1
Station 2705+10
Offset 14.00ft Lt of CL
Ground Surface Elev. 759.29 ft

Surface Water Elev. ft
Stream Bed Elev. 86.00 ft

Groundwater Elev.:
First Encounter 742.3 ft ▼
Upon Completion 736.8 ft ▽
After Hrs. ft

Description	Elev.	DEPTH (ft)	BLOWS (/6")	UCS Qu (tsf)	MOIST (%)
Shoulder Rock	758.29				
MEDIUM tan SANDY LOAM	755.79		2 3 6	0.5 P	
STIFF tan SANDY LOAM	753.29	-5	6 8 6	1.7 B	13.0
STIFF gray SILTY CLAY LOAM	749.79		3 4 8	1.1 P	17.0
VERY DENSE tan BIG GRAVEL Auger Refusal at 10' Moved 2705+07	748.29	-10	4 50 for 2"		
MEDIUM tan/brown DIRTY SANDY GRAVEL	745.79		6 9 8		
MEDIUM tan moist MEDIUM COARSE SAND	743.29	-15	3 8 10		
DENSE tan SANDY GRAVEL	740.79	▼	10 14 25		
		-20	6		
DENSE tan SANDY GRAVEL	738.29		15 21		
5' Run *(continued)*		▽			
DENSE tan SANDY GRAVEL	733.29	-25	18 24 25		
5' Run					
VERY DENSE tan SANDY GRAVEL	728.29	-30	34 36 29		
End of Boring		-40			

Northing and Easting were calculated using the ILHP-WF coordinate system

The Unconfined Compressive Strength (UCS) Failure Mode is indicated by (B-Bulge, S-Shear, P-Penetrometer)
The SPT (N value) is the sum of the last two blow values in each sampling zone (AASHTO T206)

BBS, from 137 (Rev. 8-99)

Illinois Department of Transportation
Division of Highways
IDOT

SOIL BORING LOG

Page 1 of 1

Date 8/13/20

ROUTE I-39/US Bypass 20 DESCRIPTION P92-111-06 - Proposed bike path under US 20, W of Madigan Creek LOGGED BY W. Garza

SECTION (201-3)K & (4- 1,5)R LOCATION Cherry Valley, NW2, SEC. , TWP. 43N, RNG. 2E

COUNTY Winnebago DRILLING METHOD Hollow Stem Auger HAMMER TYPE CME-45 Automatic

STRUCT. NO. 101-0215
Station

Latitude 42° 14' 05.22"
Longitude 88° 58' 11.63"
Northing 2,030,354.7913
Easting 2,620,673.5201

BORING NO. B-2
Station 2704+95
Offset 110.00ft Rt of CL
Ground Surface Elev. 748.99 ft

Surface Water Elev. ft
Stream Bed Elev. ft

Groundwater Elev.:
First Encounter 739.5 ft ▼
Upon Completion ft
After Hrs. ft

Description	Elev.	DEPTH (ft)	BLOWS (/6")	UCS Qu (tsf)	MOIST (%)
HARD light brown SANDY LOAM	746.99			4.0 P	9.0
HARD light brown SANDY LOAM	744.49		6 5 7	4.0 P	12.0
MEDIUM tan dirty MEDIUM SAND MEDIUM GRAVEL	742.99	-5	5 5 14		
MEDIUM tan SAND with MEDIUM GRAVEL	740.49		4 7 10		
MEDIUM tan SANDY GRAVEL	737.99	▼ -10	7 11 12		
MEDIUM tan SANDY GRAVEL	735.49		9 11 16		
VERY DENSE tan SANDY GRAVEL	732.99	-15	21 21 32		
5' Run		-20	18		
DENSE tan SAND with MEDIUM GRAVEL	727.99		15 16		
5' Run *(continued)*					
MEDIUM tan SANDY GRAVEL	722.99	-25	15 14 15		
End of Boring		-30			
		-40			

Northing and Easting were calculated using the ILHP-WF coordinate system

The Unconfined Compressive Strength (UCS) Failure Mode is indicated by (B-Bulge, S-Shear, P-Penetrometer)
The SPT (N value) is the sum of the last two blow values in each sampling zone (AASHTO T206)

BBS, from 137 (Rev. 8-99)

Illinois Department of Transportation
Division of Highways
IDOT

SOIL BORING LOG

Page 1 of 1

Date 8/27/20

ROUTE I-39/US Bypass 20 DESCRIPTION P92-111-06 - Proposed bike path under US 20, W of Madigan Creek LOGGED BY W. Garza

SECTION (201-3)K & (4-1.5)R LOCATION Cherry Valley, NW2, SEC. , TWP. 43N, RNG. 2E

COUNTY Winnebago DRILLING METHOD Hollow Stem Auger HAMMER TYPE CME-45 Automatic

STRUCT. NO. 101-0215
Station

Latitude 42° 14' 07.13"
Longitude -88° 58' 14.45"
Northing 2,030,544.9548
Easting 2,620,458.7071

BORING NO. B-3
Station 2705+10
Offset 156.00ft Lt of CL
Ground Surface Elev. 745.59 ft

Surface Water Elev. ft
Stream Bed Elev. 14.30 ft

Groundwater Elev.:
First Encounter 736.1 ft ▼
Upon Completion Wash ft
After ___ Hrs. ft

Description	Elev.	DEPTH (ft)	BLOWS (/6")	UCS Qu (tsf)	MOIST (%)
SOFT brown SANDY LOAM	743.59			0.3 P	23.0
MEDIUM tan SANDY LOAM with GRAVEL	742.09		6 4 8	0.5 P	10.0
SOFT tan SANDY LOAM with GRAVEL	739.59	-5	4 5 6	0.4 P	11.0
MEDIUM tan SANDY LOAM GRAVEL with FINE SAND LENS	736.09 ▼		3 4 4	0.7 B	12.0
VERY DENSE tan WEATHERED LIMESTONE	734.59	-10	3 11 100 for 5"		
18" Wash					
VERY DENSE tan WEATHERED LIMESTONE	733.09		100 for 2"		
End of Boring		-15			
		-20			

Northing and Easting were calculated using the ILHP-WF coordinate system

The Unconfined Compressive Strength (UCS) Failure Mode is indicated by (B-Bulge, S-Shear, P-Penetrometer)
The SPT (N value) is the sum of the last two blow values in each sampling zone (AASHTO T206)

BBS, from 137 (Rev. 8-99)

Illinois Department of Transportation
Division of Highways
IDOT

SOIL BORING LOG

Page 1 of 1

Date 1/31/24

ROUTE FAI 39 DESCRIPTION P92-111-06 - Sign truss SW of Harrison LOGGED BY W. Garza

SECTION (201-3)K LOCATION Cherry Valley, SEC. 2, TWP. 43N, RNG. 2E

COUNTY Winnebago DRILLING METHOD Hollow Stem Auger HAMMER TYPE CME-75 Automatic

STRUCT. NO.
Station

Latitude 42° 13' 46.41"
Longitude -88° 58' 34.94"
Northing 2,028,425.4464
Easting 2,618,947.1823

BORING NO. ST-8
Station 2679+00
Offset 0.00ft CL Prop
Ground Surface Elev. 794.30 ft

Surface Water Elev. ft
Stream Bed Elev. ft

Groundwater Elev.:
First Encounter ft
Upon Completion ft
After ___ Hrs. ft

Description	Elev.	DEPTH (ft)	BLOWS (/6")	UCS Qu (tsf)	MOIST (%)
8" Asphalt shoulder	793.30			0.3 P	16.1
SOFT gray SANDY LOAM	792.30				
MEDIUM tan SANDY LOAM	790.80		2 5 5	0.7 B	20.3
VERY SOFT gray SANDY LOAM		-5	2 4 4	0.2 B	24.4
5' Run	788.30				
VERY STIFF tan SANDY CLAY TILL		-10	5 6 9	3.3 B	20.9
5' Run	783.30				
STIFF gray SILTY LOAM		-15	5 6 7	1.8 S	22.7
5' Run	778.30				
		-20	6		
MEDIUM dark gray SILTY CLAY LOAM TILL (Rig Till)	773.30		7 8	0.5 B	21.3
5' Run *(continued)*					
DENSE tan SANDY LOAM TILL	768.30	-25	15 22 26		7.6
End of Boring		-30			
		-35			
		-40			

Northing and Easting were calculated using the ILHP-WF coordinate system

The Unconfined Compressive Strength (UCS) Failure Mode is indicated by (B-Bulge, S-Shear, P-Penetrometer)
The SPT (N value) is the sum of the last two blow values in each sampling zone (AASHTO T206)

BBS, from 137 (Rev. 8-99)

MODEL: Default
FILE NAME: c:\pwworkdir\benesch projects\projects\d0183649\D264C24-SHT-020-Span Boring.dgn
2/9/2025 2:52:18 PM

QUIGG ENGINEERING INC

USER NAME = JCray	DESIGNED - ZLD	REVISED -	
D264C24-SHT-020-Span Boring.dgn	CHECKED - KWB	REVISED -	
PLOT SCALE = 0.1667 ' / in.	DRAWN - ZLD	REVISED -	
PLOT DATE = 2/10/2025	CHECKED - MDC	REVISED -	

STATE OF ILLINOIS
DEPARTMENT OF TRANSPORTATION

SOIL BORING LOGS
OVERHEAD SIGN STRUCTURES
SHEET 20 OF 25 SHEETS

F.A.I. RTE.	SECTION	COUNTY	TOTAL SHEETS	SHEET NO.
39	(201-3)R & (4-1.5)R	WINNEBAGO	1685	450

CONTRACT NO. 64C24
ILLINOIS FED. AID PROJECT

Illinois Department of Transportation
Division of Highways
IDOT

SOIL BORING LOG

Page 1 of 1

Date 1/31/24

ROUTE FAI 39 DESCRIPTION P92-111-06 - Sign truss SW of Harrison LOGGED BY W. Garza

SECTION (201-3)K LOCATION Cherry Valley, SEC. 2, TWP. 43N, RNG. 2E

COUNTY Winnebago DRILLING METHOD Hollow Stem Auger HAMMER TYPE CME-75 Automatic

STRUCT. NO.
Station

Latitude 42° 13' 41.88" Longitude -88° 58' 39.86"
Northing 2,027,961.8456 Easting 2,618,583.3519

BORING NO. ST-9
Station 2673+00
Offset 4.00ft Rt of Prop CL
Ground Surface Elev. 790.00 ft

Surface Water Elev. ft
Stream Bed Elev. ft
Groundwater Elev.:
First Encounter ft
Upon Completion ft
After Hrs. ft

Description	Elev.	DEPTH (ft)	BLOWS (/6")	UCS Qu (tsf)	MOIST (%)
Asphalt Shoulder	789.00				
VERY SOFT dark gray SANDY LOAM	788.00			0.2 P	14.8
MEDIUM light brown SANDY LOAM	786.50		3 3 5	0.8 B	18.2
STIFF tan DIRTY MEDIUM SAND 5' Run	784.00	-5	3 5 8	1.1 P	6.9
VERY DENSE tan SANDY LOAM TILL 5' Run	779.00	-10	33 37 47		6.4
VERY DENSE tan SANDY LOAM TILL 5' Run	774.00	-15	53 47 for 3" 100 for 9"		6.2
		-20	37		
VERY DENSE tan SANDY LOAM TILL (continued)	769.00		50 43		6.8
End of Boring					
		-25			
		-30			
		-35			
		-40			

Northing and Easting were calculated using the ILHP-WF coordinate system

The Unconfined Compressive Strength (UCS) Failure Mode is indicated by (B-Bulge, S-Shear, P-Penetrometer)
The SPT (N value) is the sum of the last two blow values in each sampling zone (AASHTO T206)

BBS, from 137 (Rev. 8-99)

Illinois Department of Transportation
Division of Highways
IDOT

SOIL BORING LOG

Page 1 of 1

Date 1/31/24

ROUTE FAI 39 DESCRIPTION P92-111-06 - Sign truss SW of Harrison LOGGED BY W. Garza

SECTION (201-3)K LOCATION Cherry Valley, SEC. 3, TWP. 43N, RNG. 2E

COUNTY Winnebago DRILLING METHOD Hollow Stem Auger HAMMER TYPE CME-75 Automatic

STRUCT. NO.
Station

Latitude 42° 13' 29.75" Longitude -88° 58' 53.81"
Northing 2,026,719.5185 Easting 2,617,550.9325

BORING NO. ST-10
Station 2657+00
Offset 0.00ft CL Prop
Ground Surface Elev. 791.50 ft

Surface Water Elev. ft
Stream Bed Elev. ft
Groundwater Elev.:
First Encounter ft
Upon Completion ft
After Hrs. ft

Description	Elev.	DEPTH (ft)	BLOWS (/6")	UCS Qu (tsf)	MOIST (%)
Asphalt Shoulder	790.50				
SOFT gray SANDY LOAM	789.50			0.3 P	11.4
STIFF gray SANDY LOAM with SAND LENS	788.00		4 5 6	1.9 B	13.2
VERY STIFF tan CLAY LOAM 5' Run	785.50	-5	3 5 8	3.5 B	20.6
VERY STIFF gray SANDY CLAY LOAM 5' Run	780.50	-10	4 6 8	3.3 B	14.2
MEDIUM tan DIRTY SAND with SAND LENS 5' Run	775.50	-15	5 6 7		7.7
		-20	9		
STIFF tan SANDY LOAM TILL 5' Run (continued)	768.50		9 14	1.8 P	6.0
VERY DENSE tan MOIST FINE SAND	765.50	-25	35 35 41		17.4
End of Boring					
		-30			
		-35			
		-40			

Northing and Easting were calculated using the ILHP-WF coordinate system

The Unconfined Compressive Strength (UCS) Failure Mode is indicated by (B-Bulge, S-Shear, P-Penetrometer)
The SPT (N value) is the sum of the last two blow values in each sampling zone (AASHTO T206)

BBS, from 137 (Rev. 8-99)

MODEL: Default
FILE NAME: c:\pwworkit\benesch projects\projects\d0183649\D264C24-SHT-021-Span Boring.dgn
2/9/2025 2:53:00 PM

QUIGG ENGINEERING INC

USER NAME = JCray	DESIGNED - ZLD	REVISED -	
D264C24-SHT-021-Span Boring.dgn	CHECKED - KWB	REVISED -	
PLOT SCALE = 0.1667 ' / in.	DRAWN - ZLD	REVISED -	
PLOT DATE = 2/10/2025	CHECKED - MDC	REVISED -	

STATE OF ILLINOIS
DEPARTMENT OF TRANSPORTATION

SOIL BORING LOGS
OVERHEAD SIGN STRUCTURES
SHEET 21 OF 25 SHEETS

F.A.I. RTE.	SECTION	COUNTY	TOTAL SHEETS	SHEET NO.
39	(201-3)R & (4-1,5)R	WINNEBAGO	1685	451

CONTRACT NO. 64C24
ILLINOIS FED. AID PROJECT

Illinois Department of Transportation
Division of Highways
IDOT

SOIL BORING LOG

Page 1 of 1

Date 1/31/24

ROUTE FAI 39 DESCRIPTION P92-111-06 - Sign truss SW of Harrison LOGGED BY W. Garza

SECTION (201-3)K LOCATION Cherry Valley, SEC. 10, TWP. 43N, RNG. 2E

COUNTY Winnebago DRILLING METHOD Hollow Stem Auger HAMMER TYPE CME-75 Automatic

STRUCT. NO.
Station

Latitude 42° 13' 22.07" Northing 2,025,929.4881
Longitude -88° 59' 06.35" Easting 2,616,618.0602

BORING NO. ST-11
Station 2644+50
Offset 0.00ft CL Prop
Ground Surface Elev. 800.00 ft

Surface Water Elev. ft
Stream Bed Elev. ft

Groundwater Elev.:
First Encounter ft
Upon Completion ft
After ____ Hrs. ft

Northing and Easting were calculated using the ILHP-WF coordinate system

Description	Elev.	Depth (ft)	Blows (/6")	UCS Qu (tsf)	Moist (%)
MEDIUM light brown SANDY LOAM				0.5 P	11.4
	798.00				
STIFF tan/gray SANDY LOAM TILL			8 11 9	1.8 S	8.9
	796.50				
VERY STIFF gray CLAY LOAM with SANDY LOAM TILL LENS (FILL)		-5	4 6 11	3.3 B	20.7
	794.00				
5' Run					
VERY SOFT tan VERY MOIST SANDY LOAM TILL		-10	3 4 5	0.2 P	13.0
	789.00				
5' Run					
STIFF tan SANDY LOAM TILL		-15	12 9 11	1.9 P	8.1
5' Run					
	784.00				
		-20	4		
STIFF tan/gray SANDY LOAM TILL with CLAY LOAM LENS			8 8	1.8 S	15.3
	779.00				
5' Run *(continued)*					
MEDIUM gray SILTY LOAM		-25	2 3 5	0.9 P	21.5
	774.00				
End of Boring					
		-30			
		-35			
		-40			

The Unconfined Compressive Strength (UCS) Failure Mode is indicated by (B-Bulge, S-Shear, P-Penetrometer)
The SPT (N value) is the sum of the last two blow values in each sampling zone (AASHTO T206)

BBS, from 137 (Rev. 8-99)

Illinois Department of Transportation
Division of Highways
IDOT

SOIL BORING LOG

Page 1 of 1

Date 1/31/24

ROUTE FAI 39 DESCRIPTION P92-111-06 - Sign truss SW of Harrison LOGGED BY W. Garza

SECTION (201-3)K LOCATION Cherry Valley, SEC. 10, TWP. 43N, RNG. 2E

COUNTY Winnebago DRILLING METHOD Hollow Stem Auger HAMMER TYPE CME-75 Automatic

STRUCT. NO.
Station

Latitude 42° 13' 15.97" Northing 2,025,294.4116
Longitude -88° 59' 22.71" Easting 2,615,395.5392

BORING NO. ST-12
Station 2630+80
Offset 0.00ft CL of Prop
Ground Surface Elev. 793.80 ft

Surface Water Elev. ft
Stream Bed Elev. ft

Groundwater Elev.:
First Encounter None ft
Upon Completion Dry ft
After ____ Hrs. ft

Northing and Easting were calculated using the ILHP-WF coordinate system

Description	Elev.	Depth (ft)	Blows (/6")	UCS Qu (tsf)	Moist (%)
Asphalt with agg base					
	792.80				
STIFF reddish brown SANDY LOAM				1.0 P	12.8
	790.30				
SOFT tan SANDY LOAM TILL		-5	2 2 5	0.4 B	11.8
5' Run					
Hard drilling at 8.5'					
	785.30				
VERY DENSE tan WEATHERED LIMESTONE		-10	100 for 1"		7.4
	781.80				
VERY DENSE tan WEATHERED LIMESTONE	781.30		100 for 1"		
End of Boring					
		-15			
		-20			

The Unconfined Compressive Strength (UCS) Failure Mode is indicated by (B-Bulge, S-Shear, P-Penetrometer)
The SPT (N value) is the sum of the last two blow values in each sampling zone (AASHTO T206)

BBS, from 137 (Rev. 8-99)

MODEL: Default
FILE NAME: c:\pwworkit\benesch projects\projects\d0183649\D264C24-SHT-022-Span Boring.dgn

QUIGG ENGINEERING INC

USER NAME = JCray	DESIGNED - ZLD	REVISED -	
D264C24-SHT-022-Span Boring.dgn	CHECKED - KWB	REVISED -	
PLOT SCALE = 0.1667 ' / in.	DRAWN - ZLD	REVISED -	
PLOT DATE = 2/10/2025	CHECKED - MDC	REVISED -	

STATE OF ILLINOIS
DEPARTMENT OF TRANSPORTATION

SOIL BORING LOGS
OVERHEAD SIGN STRUCTURES

SHEET 22 OF 25 SHEETS

F.A.I. RTE.	SECTION	COUNTY	TOTAL SHEETS	SHEET NO.
39	(201-3)R & (4-1,5)R	WINNEBAGO	1685	452

CONTRACT NO. 64C24

ILLINOIS FED. AID PROJECT

2/9/2025 2:53:41 PM

Illinois Department of Transportation
Division of Highways
IDOT

SOIL BORING LOG

Page 1 of 1

Date 2/6/24

ROUTE FAI 39 DESCRIPTION P92-111-06 - Sign truss SW of Harrison LOGGED BY W. Garza

SECTION (201-3)K LOCATION Cherry Valley, SEC. 2, TWP. 43N, RNG. 2E

COUNTY Winnebago DRILLING METHOD Hollow Stem Auger HAMMER TYPE CME-75 Automatic

STRUCT. NO.
Station

Latitude 42° 13' 41.17" Longitude -88° 58' 38.77"
Northing 2,027,891.5651 Easting 2,618,666.4117

BORING NO. ST-13
Station 2673+00
Offset 170.00ft Rt
Ground Surface Elev. 787.00 ft

Surface Water Elev. ft
Stream Bed Elev. ft
Groundwater Elev.:
First Encounter None ft
Upon Completion Dry ft
After Hrs. ft

Description	Elev.	DEPTH (ft)	BLOWS (/6")	UCS Qu (tsf)	MOIST (%)
MEDIUM light brown SANDY LOAM				0.6 P	16.7
	785.00				
MEDIUM tan SANDY LOAM TILL with MOIST SAND LENS			3 5 23	0.8 P	11.6
	783.50				
STIFF tan SANDY LOAM TILL with SAND LENS		-5	6 5 8	1.3 P	9.1
5' Run	781.00				
VERY DENSE tan DRY SANDY LOAM TILL		-10	30 100 for 6"		5.6
5' Run	776.00				
VERY DENSE tan SANDY LOAM TILL		-15	100 for 3"		6.0
5' Run	771.00				
		-20	100		
VERY DENSE light gray VERY FINE SILTY SAND *(continued)*	756.00	-25	for 9.5"		11.2
End of Boring					
		-30			
		-35			
		-40			

Northing and Easting were calculated using the ILHP-WF coordinate system

The Unconfined Compressive Strength (UCS) Failure Mode is indicated by (B-Bulge, S-Shear, P-Penetrometer)
The SPT (N value) is the sum of the last two blow values in each sampling zone (AASHTO T206)

BBS, from 137 (Rev. 8-99)

Illinois Department of Transportation
Division of Highways
IDOT

SOIL BORING LOG

Page 1 of 1

Date 2/6/24

ROUTE FAI 39 DESCRIPTION P92-111-06 - Sign truss SW of Harrison LOGGED BY W. Garza

SECTION (201-3)K LOCATION Cherry Valley, SEC. 2, TWP. 43N, RNG. 2E

COUNTY Winnebago DRILLING METHOD Hollow Stem Auger HAMMER TYPE CME-75 Automatic

STRUCT. NO.
Station

Latitude 42° 13' 47.00" Longitude -88° 58' 35.90"
Northing 2,028,484.5613 Easting 2,618,873.7603

BORING NO. ST-14
Station 2679+00
Offset 90.00ft Lt
Ground Surface Elev. 780.00 ft

Surface Water Elev. ft
Stream Bed Elev. ft
Groundwater Elev.:
First Encounter None ft
Upon Completion Dry ft
After Hrs. ft

Description	Elev.	DEPTH (ft)	BLOWS (/6")	UCS Qu (tsf)	MOIST (%)
MEDIUM brown SILTY CLAY LOAM				0.8 P	24.7
	778.00				
MEDIUM brown SILTY CLAY LOAM with SANDY LOAM LENS			2 4 5	0.9 B	23.1
	776.50				
SOFT light brown SANDY LOAM		-5	3 2 4	0.4 B	16.2
5' Run	774.00				
SOFT tan SANDY LOAM TILL		-10	2 2 3	0.3 B	12.8
5' Run	769.00				
VERY DENSE/VERY STIFF tan SANDY LOAM TILL		-15	29 36 68	2.3 S	7.6
5' Run	764.00				
		-20	17		
VERY DENSE tan DRY MEDIUM SAND			30 40		5.2
5' Run *(continued)*					
	757.00				
VERY DENSE tan FINE SAND		-25	19 32 55		13.9
	754.00				
End of Boring					
		-30			
		-35			
		-40			

Northing and Easting were calculated using the ILHP-WF coordinate system

The Unconfined Compressive Strength (UCS) Failure Mode is indicated by (B-Bulge, S-Shear, P-Penetrometer)
The SPT (N value) is the sum of the last two blow values in each sampling zone (AASHTO T206)

BBS, from 137 (Rev. 8-99)

Illinois Department of Transportation
Division of Highways
IDOT

SOIL BORING LOG

Page 1 of 1

Date 2/6/24

ROUTE FAI 39 DESCRIPTION P92-111-06 - Sign truss SW of Harrison LOGGED BY W. Garza

SECTION (201-3)K LOCATION Cherry Valley, SEC. 2, TWP. 43N, RNG. 2E

COUNTY Winnebago DRILLING METHOD Hollow Stem Auger HAMMER TYPE CME-75 Automatic

STRUCT. NO.
Station

Latitude 42° 13' 30.27" Longitude -88° 58' 54.65"
Northing 2,026,771.8457 Easting 2,617,487.0849

BORING NO. ST-15
Station 2657+00
Offset 90.00ft Lt
Ground Surface Elev. 782.00 ft

Surface Water Elev. ft
Stream Bed Elev. ft

Groundwater Elev.:
First Encounter ft
Upon Completion ft
After ___ Hrs. ft

Description	Elev.	DEPTH (ft)	BLOWS (/6")	UCS Qu (tsf)	MOIST (%)
MEDIUM brown SILTY CLAY LOAM	780.00			0.5 P	14.8
SOFT tan SANDY LOAM TILL	778.50		3 3 4	0.3 P	12.1
No recovery Big till? 5' Run	776.00	-5	4 3 5		
VERY SOFT tan SANDY LOAM TILL 5' Run	771.00	-10	0 0 1	0.2 P	13.5
VERY DENSE tan WELL CEMENTED SANDY LOAM TILL Possible large boulder Auger refusal at 16'	766.00	-15	41 100 for 6.5"		7.2
End of Boring		-20			

Northing and Easting were calculated using the ILHP-WF coordinate system

The Unconfined Compressive Strength (UCS) Failure Mode is indicated by (B-Bulge, S-Shear, P-Penetrometer)
The SPT (N value) is the sum of the last two blow values in each sampling zone (AASHTO T206)

BBS, from 137 (Rev. 8-99)

Illinois Department of Transportation
Division of Highways
IDOT

SOIL BORING LOG

Page 1 of 1

Date 2/6/24

ROUTE FAI 39 DESCRIPTION P92-111-06 - Sign truss SW of Harrison LOGGED BY W. Garza

SECTION (201-3)K LOCATION Cherry Valley, SEC. 2, TWP. 43N, RNG. 2E

COUNTY Winnebago DRILLING METHOD Hollow Stem Auger HAMMER TYPE CME-75 Automatic

STRUCT. NO.
Station

Latitude 42° 13' 16.67" Longitude -88° 59' 23.01"
Northing 2,025,365.1657 Easting 2,615,372.3471

BORING NO. ST-16
Station 2630+80
Offset 80.00ft Lt
Ground Surface Elev. 791.00 ft

Surface Water Elev. ft
Stream Bed Elev. ft

Groundwater Elev.:
First Encounter None ft
Upon Completion Dry ft
After ___ Hrs. ft

Description	Elev.	DEPTH (ft)	BLOWS (/6")	UCS Qu (tsf)	MOIST (%)
MEDIUM brown SILTY CLAY LOAM	789.00			0.9 P	21.2
VERY DENSE tan WEATHERED LIMESTONE	787.50		2 21 83		7.2
VERY DENSE tan WEATHERED LIMESTONE	785.00	-5	100 for 2"		
VERY DENSE tan WEATHERED LIMESTONE	783.50		100 for 2"		
End of Boring		-10			
		-15			
		-20			

Northing and Easting were calculated using the ILHP-WF coordinate system

The Unconfined Compressive Strength (UCS) Failure Mode is indicated by (B-Bulge, S-Shear, P-Penetrometer)
The SPT (N value) is the sum of the last two blow values in each sampling zone (AASHTO T206)

BBS, from 137 (Rev. 8-99)

Illinois Department of Transportation
Division of Highways
IDOT

SOIL BORING LOG

Date 2/13/24

ROUTE FAI 39 DESCRIPTION P92-111-06 - Sign truss east of Mulford Road LOGGED BY W. Garza

SECTION (201-3)K LOCATION Cherry Valley, SEC. 2, TWP. 43N RNG. 2E

COUNTY Winnebago DRILLING METHOD Hollow Stem Auger HAMMER TYPE CME-75 Automatic

STRUCT. NO.
Station

Latitude 42° 13' 21.53" Northing 2,025,875.2765
Longitude -88° 59' 05.92" Easting 2,616,651.3210

BORING NO. ST-17
Station 2644+50
Offset 60.00ft Rt
Ground Surface Elev. 799.00 ft

Surface Water Elev. ft
Stream Bed Elev. ft

Groundwater Elev.:
First Encounter ft
Upon Completion ft
After Hrs. ft

Description	Elev.	DEPTH (ft)	BLOWS (/6")	UCS Qu (tsf)	MOIST (%)
Asphalt Agg	797.00				
MEDIUM gray LOAM	795.50		3 3 4	0.5 B	17.4
MEDIUM gray LOAM 5' Run	793.00	-5	2 4 5	0.5	20.1
MEDIUM tan SANDY LOAM TILL 5' Run	788.00	-10	6 3 6	0.6 B	10.9
No recovery (fill) Large boulder hard drilling 5' Run	783.00	-15	8 8 7		
		-20	5		
VERY STIFF gray CLAY LOAM with SANDY LOAM LENS	778.00		5 10	3.7 B	16.9
5' Run *(continued)*					
VERY STIFF gray SILTY LOAM	773.00	-25	13 9 6	2.1 S	20.7
End of Boring		-30			
		-35			
		-40			

Northing and Easting were calculated using the ILHP-WF coordinate system

The Unconfined Compressive Strength (UCS) Failure Mode is indicated by (B-Bulge, S-Shear, P-Penetrometer)
The SPT (N value) is the sum of the last two blow values in each sampling zone (AASHTO T206)

BBS, from 137 (Rev. 8-99)

MODEL: Default
FILE NAME: c:\pwworkdir\benesch projects\projects\d0183649\D264C24-SHT-025-Span Boring.dgn

QUIGG ENGINEERING INC

USER NAME = JCray	DESIGNED - ZLD	REVISED -	
D264C24-SHT-025-Span Boring.dgn	CHECKED - KWB	REVISED -	
PLOT SCALE = 0.1667 ' / in.	DRAWN - ZLD	REVISED -	
PLOT DATE = 2/10/2025	CHECKED - MDC	REVISED -	

STATE OF ILLINOIS
DEPARTMENT OF TRANSPORTATION

SOIL BORING LOGS
OVERHEAD SIGN STRUCTURES
SHEET 25 OF 25 SHEETS

F.A.I. RTE.	SECTION	COUNTY	TOTAL SHEETS	SHEET NO.
39	(201-3)R & (4-1,5)R	WINNEBAGO	1685	455
		CONTRACT NO. 64C24		
		ILLINOIS	FED. AID PROJECT	

2/9/2025 2:55:45 PM

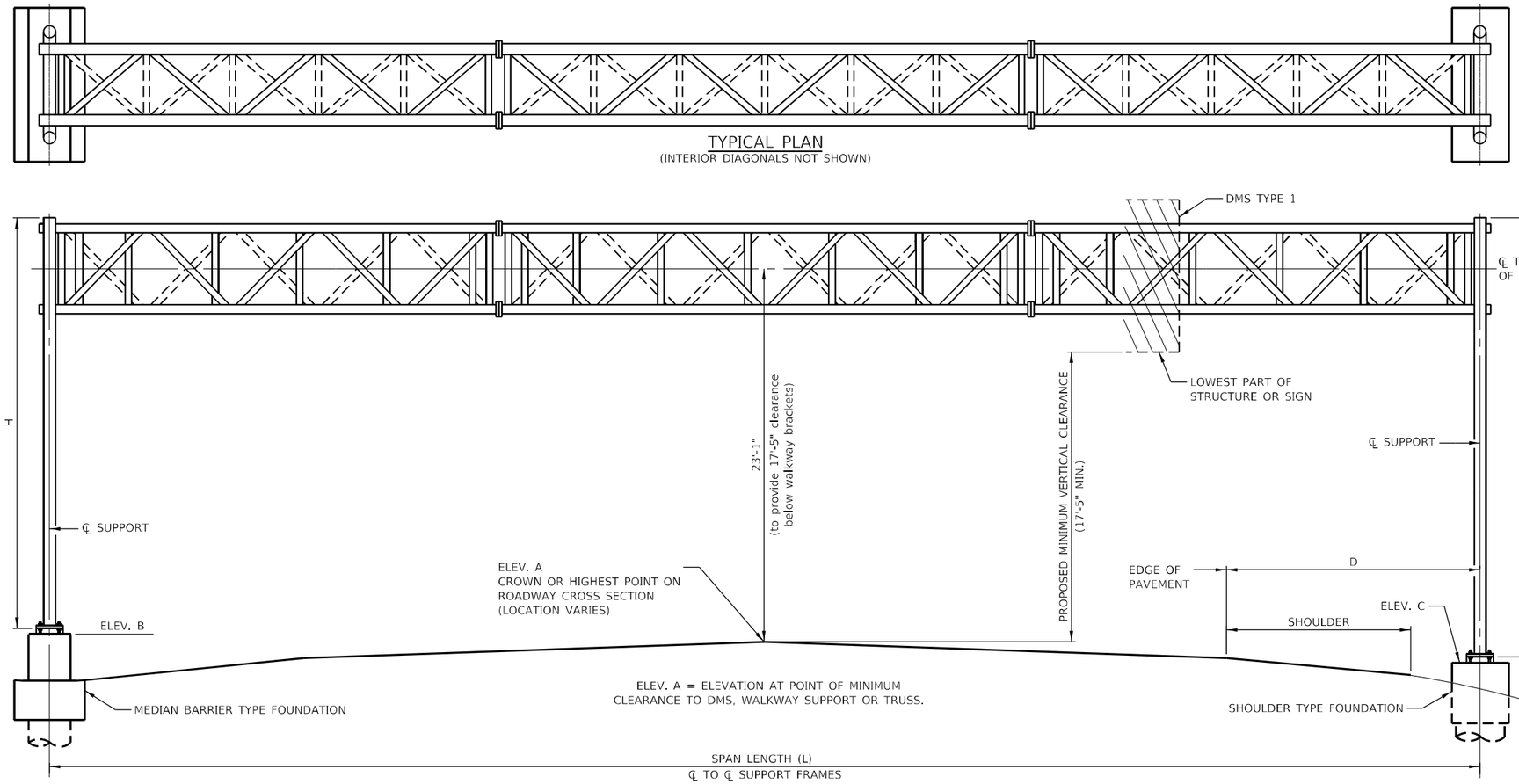

TYPICAL PLAN
(INTERIOR DIAGONALS NOT SHOWN)

TYPICAL ELEVATION
(LOOKING AT FACE OF SIGN)

NOTES:

1. WORK THIS SHEET WITH STANDARD F17.
2. SITE GROUNDING ELECTRODE SYSTEM TO BE PROVIDED AS DETAILED.

SUMMARY

STRUCTURE NUMBER	STATION	DESIGN TRUSS TYPE	SPAN LENGTH (FT)	ELEVATIONS			PROPOSED MINIMUM VERTICAL CLEARANCE	FOUNDATION TYPE		D	H	H_1	SHEET 2 OF STANDARD F17		SHEET 5 OF STANDARD F17	SHEET 10 OF STANDARD F17				SHEET 11 OF STANDARD F17		DMS TYPE 1		FOUNDATION FOR OVERHEAD SIGN STRUCTURE		REINFORCEMENT BARS, EPOXY COATED (POUNDS)	PROTECTIVE COAT (CU YD)	SIGN STRUCTURE WALKWAY (FOOT)
				A	B	C		LT.	RT.				F	P	A	a	b	c	Ls	B	C	TOTAL AREA (SQ. FT.)	TOTAL WEIGHT (LBS.)	CLASS SI CONCRETE (CU YD)	CLASS DS CONCRETE (CU YD)			
2S101I039R121.2	2689+00	STEEL	120'	789.92	792.69	-	17'-5"	MEDIAN	-	13.50'	24.31'	-	40.00'	5.00'	15.06'	22.50'	0.00'	13.00'	30.00'	2.17'	10.67'	300.00	5,000	7.7	57.7	11,320	31	13
					-	783.87		-	SHLDR.	58.50'	-	33.14'			23.89'									-	35.5	7,250	-	
																							TOTAL	7.7	93.2	18,570	31	13

TOTAL BILL OF MATERIAL

PAY ITEM	DESCRIPTION	UNIT	TOTAL
JS733850	OVERHEAD SIGN STRUCTURE, SPAN TYPE (STEEL) (120 FT)	FOOT	120
JS734A10	FOUNDATION FOR OVERHEAD SIGN STRUCTURE, SPAN TYPE	CU YD	100.9
50800205	REINFORCEMENT BARS, EPOXY COATED	POUND	18,570
50300300	PROTECTIVE COAT	SQ YD	31
JS733220	SIGN STRUCTURE WALKWAY	FOOT	13

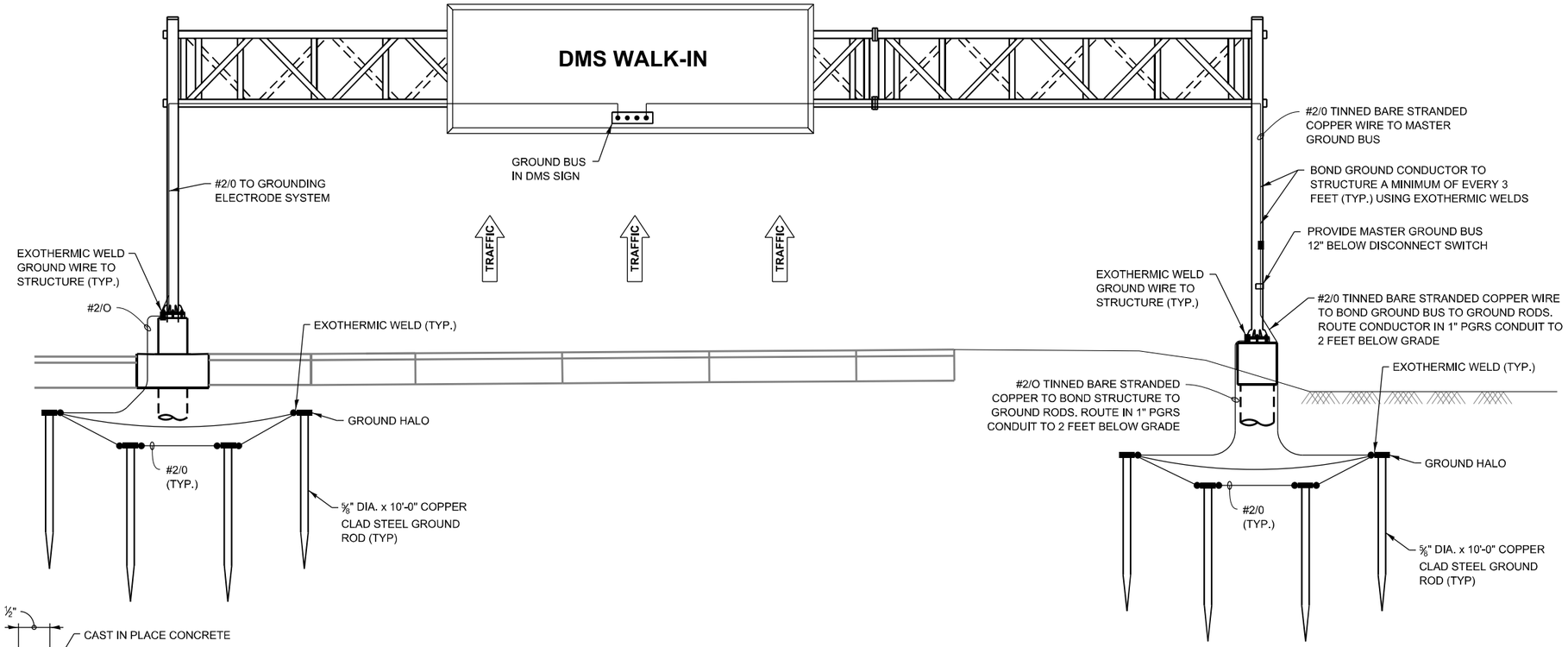

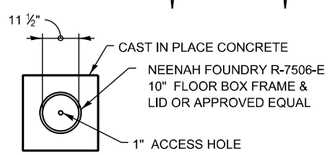

GROUND WELL PLAN DETAIL
(NOT TO SCALE, NOTE 3)

NOTES:

1. GROUNDING SYSTEM SHALL BE PLACED WITHIN ILLINOIS TOLLWAY RIGHT-OF-WAY.
2. GROUND MOUNTED CONTROL CABINET SHALL BE PLACED UPSTREAM OF THE STRUCTURE AT THE LOCATION SHOWN ON THE PLAN VIEWS.
3. INSTALL MARKER TAPE DIRECTLY ABOVE GROUNDING ELECTRODE CONDUCTORS.
4. THE COST OF ALL MATERIALS, ALL GROUND BUSBARS, EXOTHERMIC WELDING, GROUND WELL, GROUND RODS AND ALL OTHER ITEMS TO COMPLETE THE GROUNDING ELECTRODE SYSTEM SHALL BE INCLUDED IN PAY ITEM JT132621 - DMS ELECTRICAL WORK - WALK-IN.
5. REFER TO SHEET M-ITS-1102 FOR DMS TYPICAL SITE WIRING DETAIL.
6. GROUND RODS SHALL BE INSTALLED IN GROUND WELLS IN FINISHED GRADE UNLESS INSTALLED UNDER SHOULDERS OR PAVEMENT.

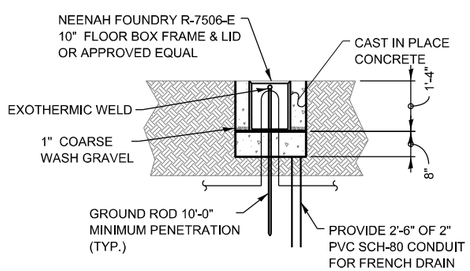

GROUND WELL ELEVATION DETAIL
(NOT TO SCALE, NOTE 3)

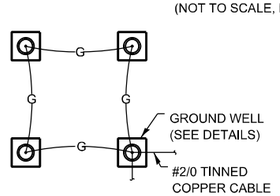

GROUND HALO DETAIL
N.T.S.

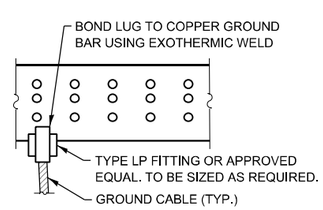

MASTER GROUND BUSBAR CONNECTION DETAIL
(NOT TO SCALE)

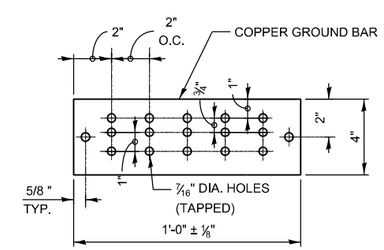

MASTER GROUND BUSBAR SUPPORT SPACING DETAIL
(NOT TO SCALE)

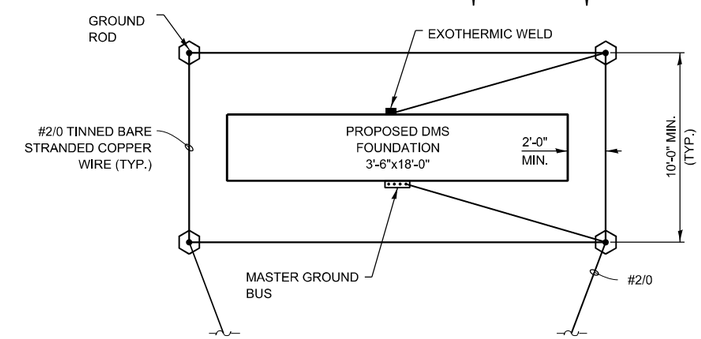

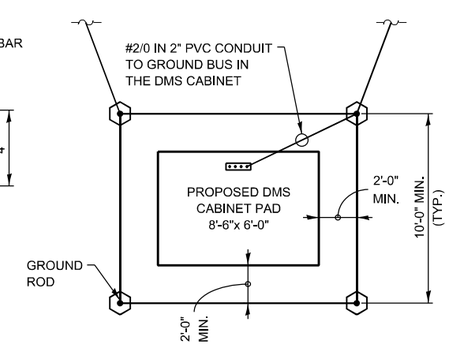

GROUNDING SCHEMATIC
(NOT TO SCALE)

MODEL: Default
FILE NAME: c:\pwworkdir\benesch projects\projects\0236208\D264C24-SHT-002-DMS Grounding.dgn
2/9/2025 2:56:24 PM

QUIGG ENGINEERING INC

USER NAME = JCray	DESIGNED - ZLD	REVISED -	
D264C24-SHT-002-DMS Grounding.dgn	CHECKED - KWB	REVISED -	
PLOT SCALE = 0.1667 ' / in.	DRAWN - ZLD	REVISED -	
PLOT DATE = 2/10/2025	CHECKED - MDC	REVISED -	

STATE OF ILLINOIS
DEPARTMENT OF TRANSPORTATION

DMS WALK-IN SITE
GROUNDING PLAN

SHEET 2 OF 4 SHEETS

F.A.I. RTE.	SECTION	COUNTY	TOTAL SHEETS	SHEET NO.
39	(201-3)R & (4-1.5)R	WINNEBAGO	1685	457
		CONTRACT NO. 64C24		
	ILLINOIS	FED. AID PROJECT		

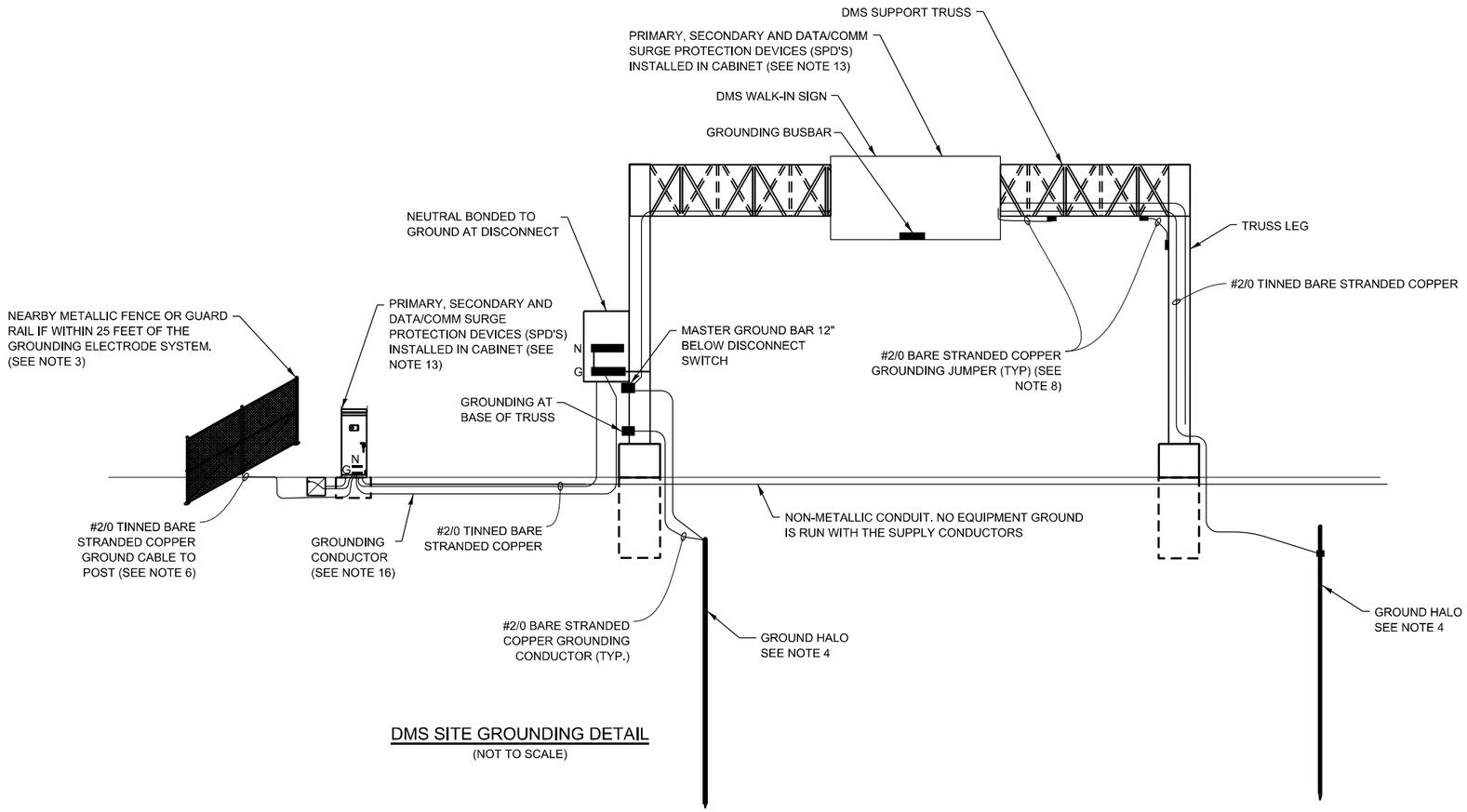

DMS SITE GROUNDING DETAIL

(NOT TO SCALE)

NOTES:

1. ADDITIONAL GROUND RODS SHALL BE ADDED TO GROUNDING ELECTRODE CONDUCTOR AS REQUIRED UNTIL RESISTANCE TO GROUND IS 5 OHMS OR LESS. FOR DEVICE AND POWER SERVICE LOCATIONS. IF ADDITIONAL GROUND ROD ELECTRODES ARE REQUIRED IN ORDER TO ACHIEVE REQUIRED RESISTANCE THEY SHALL RADIATE OUT FROM EXISTING GROUND ROD ELECTRODES, THESE SHALL BE CONNECTED WITH #2/0 TINNED BARE STRANDED CONDUCTOR, AND SHALL BE 20' FROM CONNECTED GROUND ROD. ALL COMMUNICATION EQUIPMENT GROUNDING SITES SHALL BE TESTED FOR RESISTANCE TO GROUND USING THE THREE-POINT FALL-OF-POTENTIAL TEST PER ANSI/IEEE STD 81. SEE ITS ELEMENT SITE GROUNDING SPECIAL PROVISION FOR PROCEDURES.
2. GROUND RODS SHALL NOT BE ROUTED THROUGH FOUNDATIONS.
3. FENCES AND OTHER METALLIC STRUCTURES WITH PATHS TO GROUND SHALL BE CONNECTED TO EQUIPMENT GROUND IF THEY ARE LOCATED WITHIN 25' OF THE GROUNDING ELECTRODE SYSTEM OR ANY OBJECT GROUNDED TO THE GROUNDING ELECTRODE SYSTEM.
4. GROUND RODS SHALL BE INSTALLED IN GROUND WELLS IN FINISHED GRADE UNLESS INSTALLED UNDER SHOULDERS OR PAVEMENT.
5. ALL EQUIPMENT GROUNDS SHALL BE PROPERLY CONNECTED TO A CHASSIS: ALL PAINT AND OTHER COATINGS, INCLUDING GALVANIZATION, SHALL BE REMOVED PRIOR TO TERMINATION OF A GROUND, AFTER THE GROUND IS TERMINATED A NON-OXIDIZING COATING SHALL BE PAINTED OVER THE EXPOSED METAL SURFACES.
6. GROUNDING ELECTRODE SYSTEM CONNECTIONS TO FENCING SHALL BE MADE USING HEAVY DUTY TINNED LISTED PIPE CLAMPS DESIGNED FOR GROUNDING AND STAINLESS STEEL HARDWARE.
7. ALL GROUNDING DIAGRAMS ARE SCHEMATIC ONLY.
8. ALL METALLIC MEMBERS OF THE DMS TRUSS AND THE DMS SIGN WITHIN 6 FEET OF EACH OTHER SHALL BE BONDED TOGETHER. WELDS SHALL BE CONSIDERED AN ACCEPTABLE BONDING METHOD. U-BOLT CONNECTIONS SHALL NOT BE CONSIDERED AN ACCEPTABLE BONDING METHOD.
9. AT LEAST AN 8 INCH MINIMUM BENDING RADIUS SHALL BE MAINTAINED ON ALL GROUNDING ELECTRODE CONDUCTORS. THE ANGLE OF ANY BENDING SHALL NOT BE LESS THAN 90 DEGREE.
10. GROUNDING CONDUCTORS SHALL ALWAYS ROUTE AS STRAIGHT AS POSSIBLE. "U" FORM JUMPERS SHALL BE ACCEPTABLE ONLY FOR GATES AND DOORS.
11. THE QUANTITY OF GROUNDING ELECTRODE CONDUCTORS CONNECTED TO A GROUND ROD ELECTRODE SHALL BE LIMITED TO THREE.
12. WHENEVER POSSIBLE, GROUND ROD ELECTRODES SHALL BE INSTALLED NO CLOSER THAN 11' FROM A FOUNDATION.
13. EVERY COPPER CONDUCTOR OR CABLE ENTERING OR LEAVING A DMS ENCLOSURE, THE DMS CONTROLLER, OR THE CCTV ELECTRONICS ENCLOSURE SHALL BE PROTECTED, WITH A SURGE PROTECTION DEVICE.
14. DIAGRAM OMITS EQUIPMENT GROUNDING INSIDE ENCLOSURES.
15. GROUNDING CONDUCTOR SHALL BE #2/0 TINNED BARE STRANDED COPPER. CONTRACTOR SHALL INSTALL GROUND RODS AS NECESSARY TO ENSURE GROUND RESISTANCE AT DMS CABINET IS 5 OHMS OR LESS.
16. IF THERE IS A METAL HANDRAIL WITHIN 20 FEET OF CONTROL CABINET CONNECT HANDRAIL TO GROUNDING SYSTEM WITH #2/0 TINNED BARE STRANDED COPPER CONDUCTOR.

Illinois Department of Transportation
Division of Highways
IDOT

SOIL BORING LOG

Page 1 of 1

Date 1/4/24

ROUTE FAI 39 DESCRIPTION P92-111-06 - Various sign trusses, Mulford Rd. and Harrison Ave. LOGGED BY W. Garza

SECTION (201-3)K LOCATION Cherry Valley, NE 1/4 10, SE 1/4 3, SW 1/4, N 1/2 2, SEC. , TWP. 43N, RNG. 2E

COUNTY Winnebago DRILLING METHOD Hollow Stem Auger HAMMER TYPE CME-75 Automatic

STRUCT. NO.
Station

Latitude 42° 13' 54.17" Longitude -88° 58' 26.40"
Northing 2,029,220.4616 Easting 2,619,578.0508

BORING NO. ST-3
Station 2689+00
Offset 5.00ft Rt of CL
Ground Surface Elev. 778.10 ft

Surface Water Elev. ft
Stream Bed Elev. ft
Groundwater Elev.:
First Encounter None ft
Upon Completion Dry ft
After Hrs. ft

Description	Elev.	DEPTH (ft)	BLOWS (/6")	UCS Qu (tsf)	MOIST (%)
Asphalt Concrete	777.10				
VERY STIFF light brown SANDY LOAM	776.10			2.6 P	12.0
STIFF gray SILTY CLAY LOAM	774.60		3 3 4	1.4 B	24.0
No recovery 5' Run	772.10	-5	3 8 13		
VERY STIFF gray CLAY LOAM 5' Run	767.10	-10	3 5 8	2.5 B	20.0
STIFF brown SANDY LOAM with SAND LENS 5' Run	760.60	-15	5 7 7	1.5 S	12.0
		-20	10		

Description	Elev.	DEPTH (ft)	BLOWS (/6")	UCS Qu (tsf)	MOIST (%)
MEDIUM tan MEDIUM SAND 5' Run *(continued)*	755.10		10 11		9.0
VERY DENSE tan DRY SANDY LOAM TILL	752.10	-25	100 for 7"		6.0
End of Boring		-30			
		-35			
		-40			

Northing and Easting were calculated using the ILHP-WF coordinate system

The Unconfined Compressive Strength (UCS) Failure Mode is indicated by (B-Bulge, S-Shear, P-Penetrometer)
The SPT (N value) is the sum of the last two blow values in each sampling zone (AASHTO T206)

BBS, from 137 (Rev. 8-99)

Illinois Department of Transportation
Division of Highways
IDOT

SOIL BORING LOG

Page 1 of 1

Date 1/5/24

ROUTE FAI 39 DESCRIPTION P92-111-06 - Various sign trusses, Mulford Rd. and Harrison Ave. LOGGED BY W. Garza

SECTION (201-3)K LOCATION Cherry Valley, NE 1/4 10, SE 1/4 3, SW 1/4, N 1/2 2, SEC. , TWP. 43N, RNG. 2E

COUNTY Winnebago DRILLING METHOD Hollow Stem Auger HAMMER TYPE CME-75 Automatic

STRUCT. NO.
Station

Latitude 42° 13' 53.37" Longitude -88° 58' 25.07"
Northing 2,029,140.9638 Easting 2,619,679.3870

BORING NO. ST-5
Station 2689+00
Offset 140.00ft Rt of CL
Ground Surface Elev. 774.10 ft

Surface Water Elev. ft
Stream Bed Elev. ft
Groundwater Elev.:
First Encounter 749.6 ft ▼
Upon Completion 749.6 ft ▽
After Hrs. ft

Description	Elev.	DEPTH (ft)	BLOWS (/6")	UCS Qu (tsf)	MOIST (%)
MEDIUM brown SILTY CLAY LOAM	772.10			0.8 P	21.0
SOFT brown SANDY LOAM with SAND LENS	770.10		2 3 4	0.3 B	19.0
MEDIUM tan SANDY GRAVEL 5' Run	768.10	-5	7 5 8		
DENSE tan MEDIUM SAND 5' Run	761.10	-10	10 16 30		11.0
VERY DENSE tan MEDIUM SAND with SANDY LOAM LENS 5' Run	758.10	-15	26 100 for 9"		4.0
		-20	12		

Description	Elev.	DEPTH (ft)	BLOWS (/6")	UCS Qu (tsf)	MOIST (%)
HARD tan SANDY LOAM TILL with SAND LENS	753.10		28 34	6.6 S	7.0
5' Run *(continued)*					
STIFF tan SANDY LOAM TILL with SAND LENS	748.10	-25	15 19 23	2.1 S	9.0
End of Boring		-30			
		-35			
		-40			

Northing and Easting were calculated using the ILHP-WF coordinate system

The Unconfined Compressive Strength (UCS) Failure Mode is indicated by (B-Bulge, S-Shear, P-Penetrometer)
The SPT (N value) is the sum of the last two blow values in each sampling zone (AASHTO T206)

BBS, from 137 (Rev. 8-99)

MODEL: Default
FILE NAME: c:\pwworkit\benesch projects\projects\d0236208\D264C24-SHT-004-Span Boring.dgn
2/9/2025 2:56:49 PM

QUIGG ENGINEERING INC

USER NAME = JCray	DESIGNED - ZLD	REVISED -	
D264C24-SHT-004-Span Boring.dgn	CHECKED - KWB	REVISED -	
PLOT SCALE = 0.1667 ' / in.	DRAWN - ZLD	REVISED -	
PLOT DATE = 2/10/2025	CHECKED - MDC	REVISED -	

STATE OF ILLINOIS
DEPARTMENT OF TRANSPORTATION

SOIL BORING LOGS
TOLLWAY OVERHEAD SIGN STRUCTURES
SHEET 4 OF 4 SHEETS

F.A.I. RTE.	SECTION	COUNTY	TOTAL SHEETS	SHEET NO.
39	(201-3)R & (4-1,5)R	WINNEBAGO	1685	459

CONTRACT NO. 64C24
ILLINOIS FED. AID PROJECT

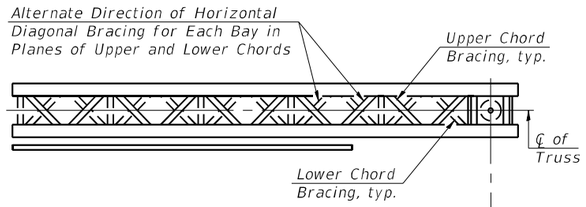

TYPICAL PLAN

(Walkway not shown)

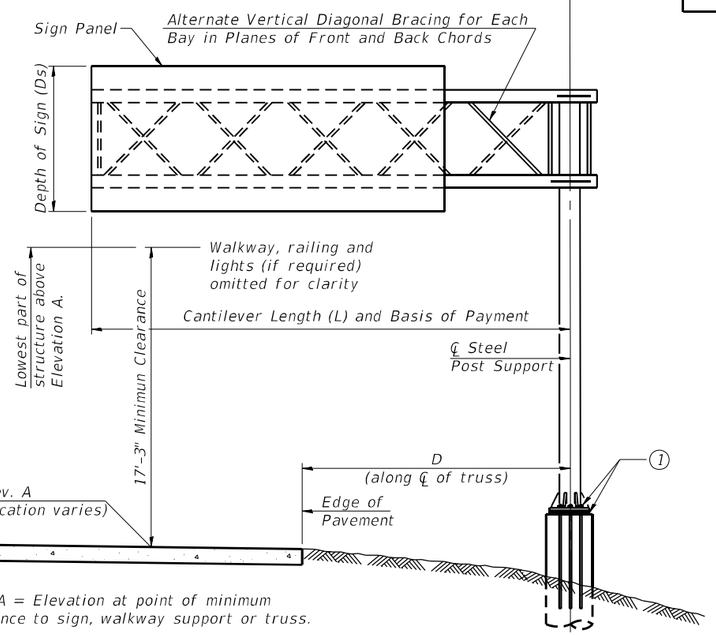

Elev. A = Elevation at point of minimum clearance to sign, walkway support or truss.

TYPICAL ELEVATION

Looking in Direction of Traffic

Sign support structures may be subject to damaging vibrations and oscillations when sign panels are not in place during erection or maintenance of the structure. To avoid these vibrations and oscillations, consideration should be given to attaching temporary blank sign panels to the structure.

Structure Number	Station	Design Truss Type	Cantilever Length (L)	Elev. A	Dim. D	Ds	Total Sign Area
2C101I039R121.8	2719+25	III-C-A	40'-0"	792.54	28'-0"	12'-6"	138 SF
2C101U020L024.8	152+25	III-C-A	35'-0"	778.85	7'-0"	7'-0"	176 SF

Truss Type	Maximum Sign Area	Maximum Length
I-C-A	170 Sq. Ft.	25 Ft.
II-C-A	340 Sq. Ft.	30 Ft.
III-C-A	400 Sq. Ft.	40 Ft.

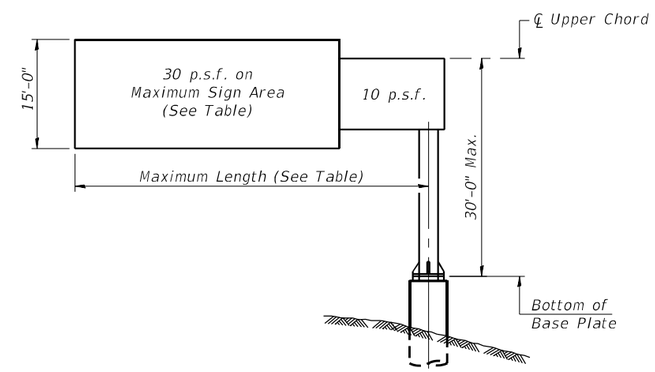

DESIGN WIND LOADING DIAGRAM

Parameters shown are basis for I.D.O.T. Standards Installations not within dimensional limits shown require special analysis for all components.

Note:
Trusses shall be shipped individually with adequate provision to prevent detrimental motion during transport. This may require ropes between horizontals and diagonals or energy dissipating (elastic) ties to the vehicle. The contractor is responsible for maintaining the configuration and protection of the trusses.

1 After adjustments to level truss and insure adequate vertical clearance, all top and leveling nuts shall be tightened against the base plate with a minimum torque of 200 lb.-ft. Stainless steel mesh shall then be placed around the perimeter of the base plate. Secure to base plate with stainless steel banding.

* If M270 Gr. 50W (M222) steel is proposed, chemistry for plate to be used shall first be approved by the Engineer as suitable for galvanizing and welding.

GENERAL NOTES

DESIGN: AASHTO Standard Specifications for Structural Supports for Highway Signs, Luminaires and Traffic Signals. ("AASHTO Specifications")

CONSTRUCTION: Current (at time of letting) Illinois Department of Transportation Standard Specifications for Road and Bridge Construction, Supplemental Specifications and Special Provisions. ("Standard Specifications")

LOADING: 90 M.P.H. WIND VELOCITY

WALKWAY LOADING: Dead load plus 500 lbs. concentrated live load.

DESIGN STRESSES:
Field Units
f' = 3,500 p.s.i.
fy = 60,000 p.s.i. (reinforcement)

WELDING: All welds to be continuous unless otherwise shown. All welding to be done in accordance with current AWS D1.1 and D1.2 Structural Welding Codes (Steel and Aluminum) and the Standard Specificiations.

MATERIALS: Aluminum Alloys as shown throughout plans. All Structural Steel Pipe shall be ASTM A53 Grade B or A500 Grade B or C. If A500 pipe is substituted for A53, then the outside diameter shall be as detailed and wall thickness greater than or equal to A53.
All Structural Steel Plates and Shapes shall conform to AASHTO M270 Gr. 36, Gr. 50 or Gr. 50W*. Stainless steel for shims, sleeves and handhole covers shall be ASTM A240, Type 302 or 304, or another alloy suitable for exterior exposure and acceptable to the Engineer.
The steel pipe and stiffening ribs at the base plate for the column shall have a minimum longitudinal Charpy V-Notch (CVN) energy of 15 lb.-ft. at 40° F. (Zone 2) before galvanizing.

FASTENERS FOR ALUMINUM TRUSSES: All bolts noted as "high strength" must satisfy the requirements of AASHTO M164 (ASTM A325), or approved alternate, and must have matching lock nuts. Threaded studs for splices (if Members interfere) must satisfy the requirements of ASTM A449, ASTM A193, Grade B7, or approved alternate, and must have matching lock nuts. Bolts and lock nuts not required to be high strength must satisfy the requirements of ASTM A307. All bolts and lock nuts must be hot dip galvanized per AASHTO M232. The lock nuts must have nylon or steel inserts. A stainless steel flat washer conforming to ASTM A240 Type 302 or 304, is required under both head and nut or under both nuts where threaded studs are used. High strength bolt installation shall conform to Article 505.04 (f) (2)d of the IDOT Standard Specifications for Road and Bridge Construction. Rotational capacity ("ROCAP") testing of bolts will not be required.

U-BOLTS AND EYEBOLTS: U-Bolts and Eyebolts must be produced from ASTM A276 Type 304, 304L, 316 or 316L, Condition A, cold finished stainless steel, or an equivalent material acceptable to the Engineer. All nuts for U-Bolts and Eyebolts must be lock nuts equivalent to ASTM A307 with nylon or steel inserts and hot dip galvanized per AASHTO M232. A stainless steel flat washer conforming to ASTM A240, Type 302 or 304, is required under each U-Bolt and Eyebolt lock nut.

GALVANIZING: All Steel Grating, Plates, Shapes and Pipe shall be Hot Dip Galvanized after fabrication in accordance with AASHTO M111. Painting is not permitted.

ANCHOR RODS: Shall conform to ASTM F1554 Gr. 105.

CONCRETE SURFACES: All concrete surfaces above an elevation 6" below the lowest final ground line at each foundation shall be cleaned and coated with Concrete Sealer in accordance with the Standard Specifications.

REINFORCEMENT BARS: Reinforcement Bars designated (E) shall be epoxy coated in accordance with the Standard Specifications.

FOUNDATIONS: The contract unit price for Drilled Shaft Concrete Foundations shall include reinforcement bars complete in place.

TOTAL BILL OF MATERIAL

ITEM	UNIT	TOTAL
OVERHEAD SIGN STRUCTURE CANTILEVER TYPE I-C-A	Foot	-
OVERHEAD SIGN STRUCTURE CANTILEVER TYPE II-C-A	Foot	-
OVERHEAD SIGN STRUCTURE CANTILEVER TYPE III-C-A	Foot	75
OVERHEAD SIGN STRUCTURE WALKWAY, TYPE A	Foot	-
DRILLED SHAFT CONCRETE FOUNDATIONS	Cu. Yds.	22.0

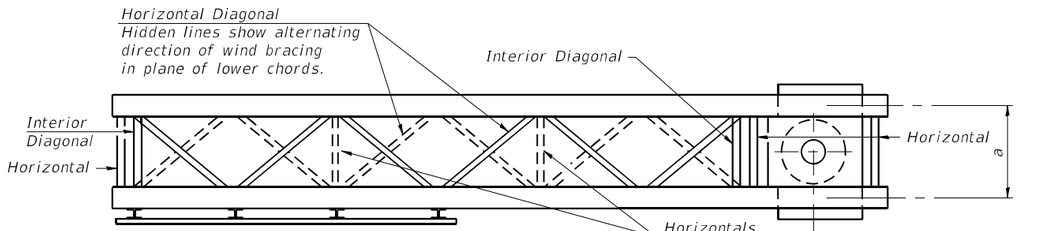

PLAN
(Walkway not shown)

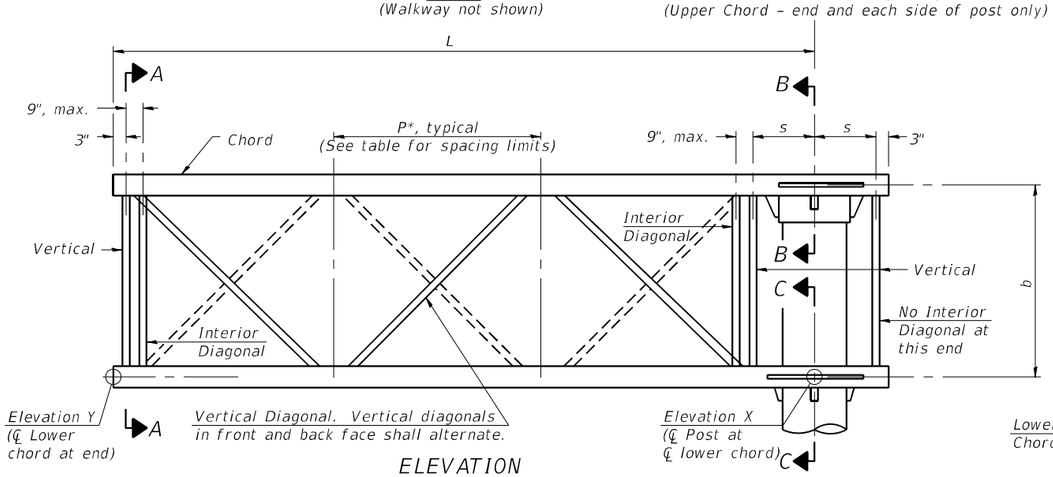

ELEVATION
(Sign and walkway omitted for clarity)

TYPICAL TRUSS UNIT

For Section B-B and Section C-C, see Base Sheet OSC-A-3.

Note:
There are twice as many horizontal diagonals as there are vertical diagonals.

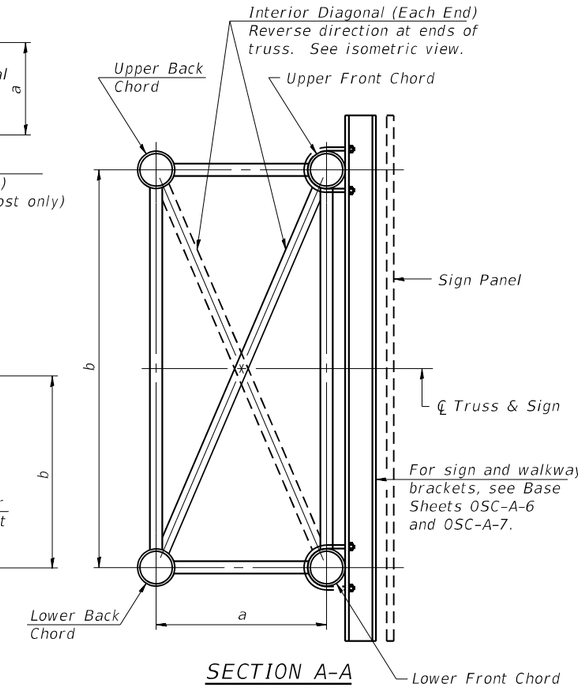

SECTION A-A

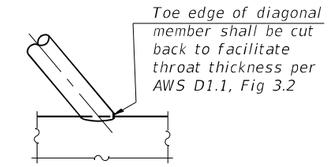

DETAIL A

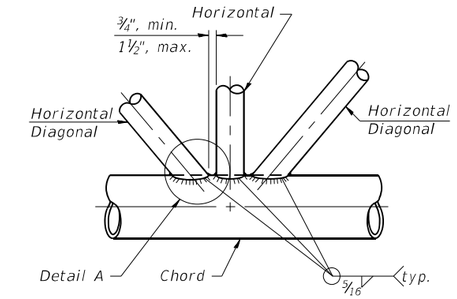

TRUSS INTERIOR JOINT DETAIL

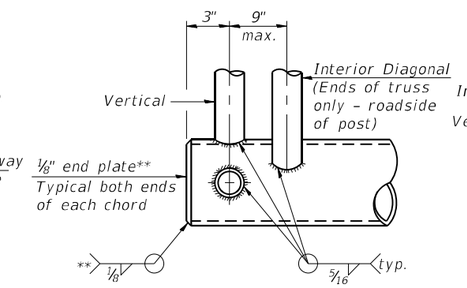

CANTILEVER END JOINT DETAIL

** Contractor may alternatively use standard aluminum drive-fit cap to close ends.
½" Ø Drain hole in end plate / drive-fit cap.

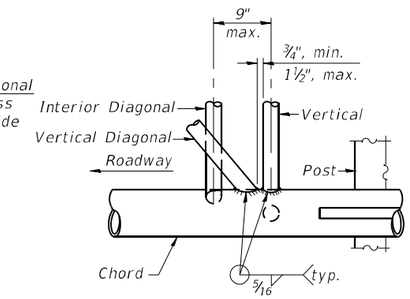

POST END JOINT DETAIL

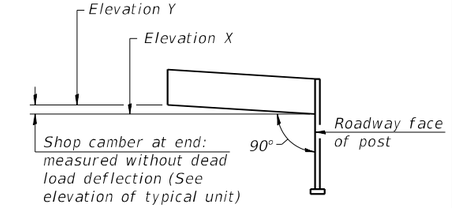

CAMBER DIAGRAM
(For Fabrication Only)

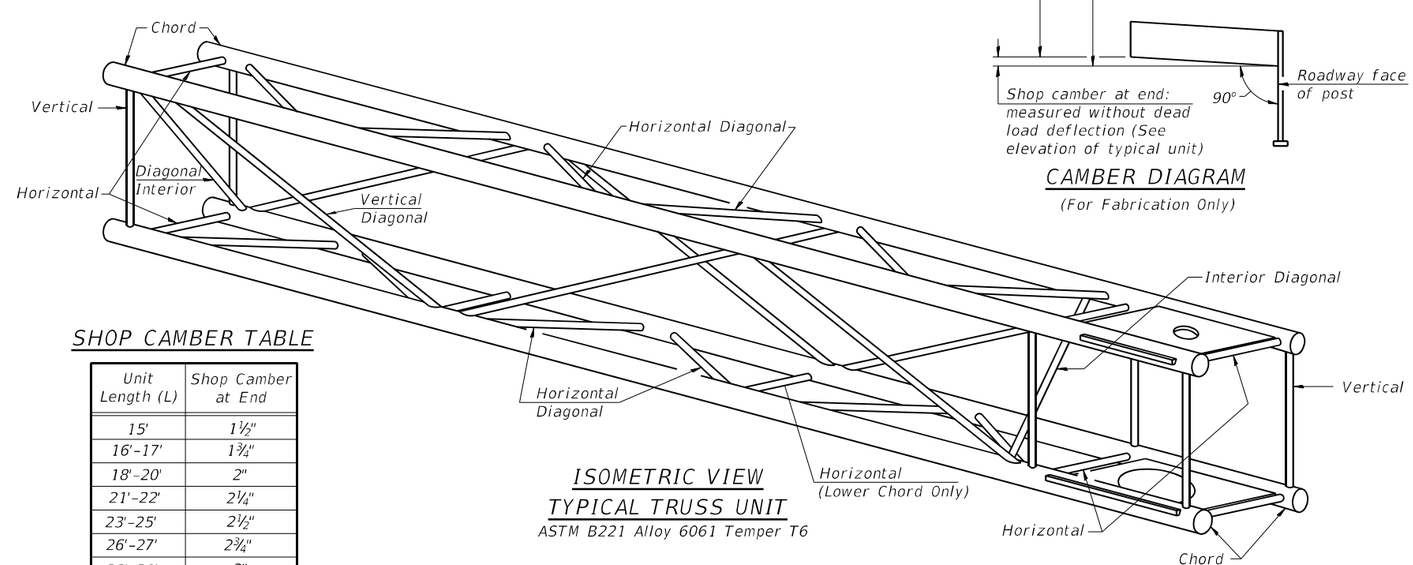

ISOMETRIC VIEW
TYPICAL TRUSS UNIT
ASTM B221 Alloy 6061 Temper T6

TRUSS UNIT TABLE

Truss Type	Dimension "a"	Dimension "b"	Dimension "s"	Limits for Panel Spacing (P)*	Up. & Low. Chord		Verticals; Horizontals; Vertical, Horizontal, and Interior Diagonals	
					O.D.	Wall	O.D.	Wall
I-C-A	24"	54"	16"	36" min. to 48" max.	5"	5/16"	2½"	5/16"
II-C-A	36"	66"	21"	42" min. to 54" max.	6½"	5/16"	3¼"	5/16"
III-C-A (35' Max.)	36"	84"	21"	48" min. to 66" max.	7"	⅜"	3½"	⅜"
III-C-A (>35' to 40')	36"	84"	21"	48" min. to 66" max.	8"	⅜"	3½"	⅜"

$$*P = \frac{L-s-3''}{\#\ Panels}$$

Structure Number	Station	Truss Type	Design Length (L)	Number of Panels Per Unit	Panel Length (P)*
2C101I039R121.8	2719+25	III-C-A	40'-0"	8	4'-9"
2C101U020L024.8	152+25	III-C-A	35'-0"	6	5'-6"

SHOP CAMBER TABLE

Unit Length (L)	Shop Camber at End
15'	1½"
16'-17'	1¾"
18'-20'	2"
21'-22'	2¼"
23'-25'	2½"
26'-27'	2¾"
28'-30'	3"
31'-32'	3¼"
33'-35'	3½"
36'-37'	4"
38'-40'	4½"

OSC-A-2 2-17-2017

QUIGG ENGINEERING INC

USER NAME = JCray	DESIGNED - ZLD	REVISED -	
D264C24-SHT-002-Cantilever Truss Details.dgn	CHECKED - KWB	REVISED -	
PLOT SCALE = 0.1667 ' / in.	DRAWN - ZLD	REVISED -	
PLOT DATE = 2/10/2025	CHECKED - MDC	REVISED -	

STATE OF ILLINOIS
DEPARTMENT OF TRANSPORTATION

CANTILEVER SIGN STRUCTURES – TRUSS DETAILS
ALUMINUM TRUSS & STEEL POST

SHEET 2 OF 8 SHEETS

F.A.I. RTE.	SECTION	COUNTY	TOTAL SHEETS	SHEET NO.
39	(201-3)R & (4-1.5)R	WINNEBAGO	1685	461

CONTRACT NO. 64C24
ILLINOIS FED. AID PROJECT

MODEL: Default
FILE NAME: c:\pwworkdir\benesch projects\d0183648\D264C24-SHT-002-Cantilever Truss Details.dgn
2/9/2025 2:57:44 PM

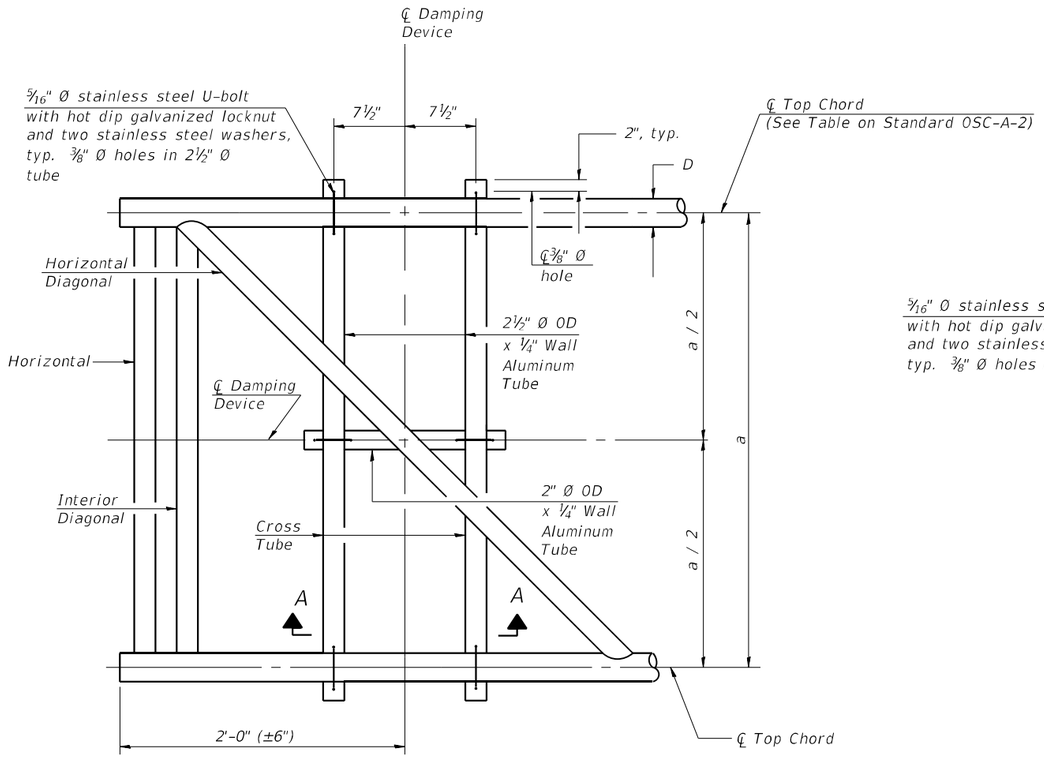

PLAN DETAIL

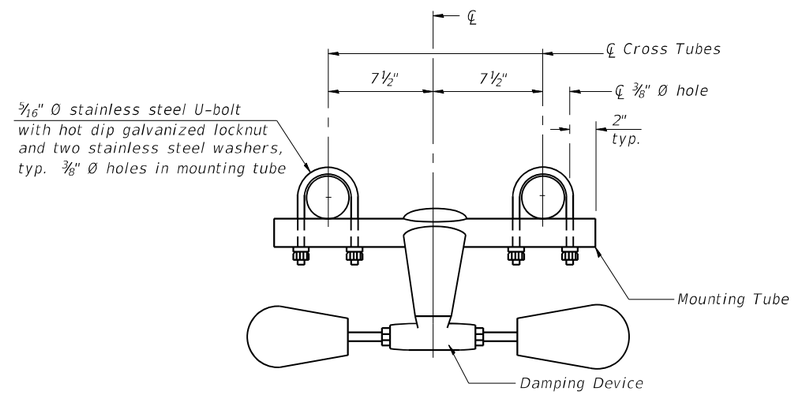

TRUSS DAMPING DEVICE CONNECTION DETAIL

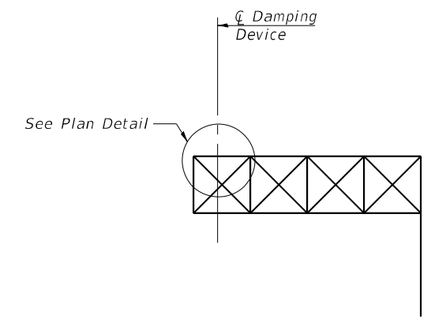

ELEVATION

Aluminum Cantilever Sign Structure

GENERAL NOTES

Damper: One damper per truss. (31 lbs. Stockbridge-Type Aluminum-29" minimum between ends of weights)

Materials: Aluminum tubes shall be ASTM B221 alloy 6061 temper T6

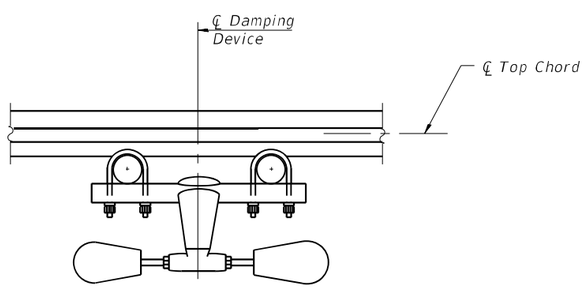

SECTION A-A

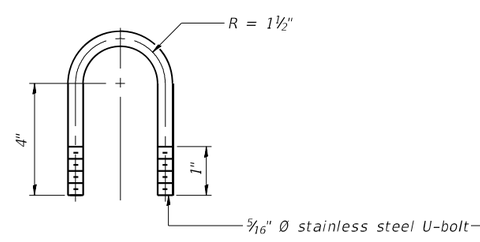

DAMPING DEVICE MOUNTING TUBE U-BOLT DETAIL

(Typical)

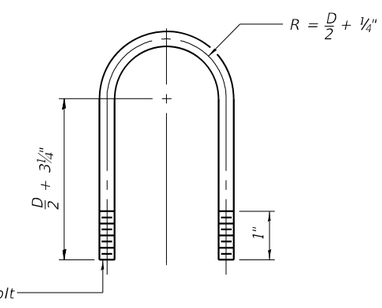

TOP CHORD TO CROSS TUBE U-BOLT DETAIL

(Typical)

OSC-A-D 2-17-2017

QUIGG ENGINEERING INC	USER NAME = JCray	DESIGNED - ZLD	REVISED -
	D264C24-SHT-003-Cantilever Damping Device.dgn	CHECKED - KWB	REVISED -
	PLOT SCALE = 0.1667 ' / in.	DRAWN - ZLD	REVISED -
	PLOT DATE = 2/10/2025	CHECKED - MDC	REVISED -

STATE OF ILLINOIS
DEPARTMENT OF TRANSPORTATION

CANTILEVER SIGN STRUCTURE
DAMPING DEVICE

SHEET 3 OF 8 SHEETS

F.A.I. RTE.	SECTION	COUNTY	TOTAL SHEETS	SHEET NO.
39	(201-3)R & (4-1.5)R	WINNEBAGO	1685	462

CONTRACT NO. 64C24

ILLINOIS | FED. AID PROJECT

MODEL: Default
FILE NAME: c:\pwworkdir\benesch projects\projects\d0183648\D264C24-SHT-003-Cantilever Damping Device.dgn
2/9/2025 2:57:56 PM

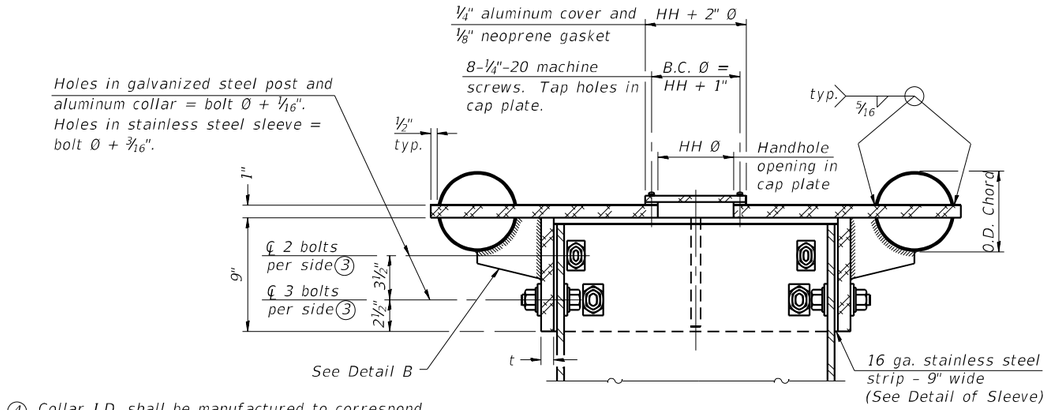

④ Collar I.D. shall be manufactured to correspond to O.D. of actual galvanized post and stainless steel sleeve plus ⅛" (±1/16"). Maximum gap between post and collar at any location equals ⅛" before tightening bolts.

SECTION B-B

Bolts, washers (including contoured washers), and locknuts shall be stainless steel.

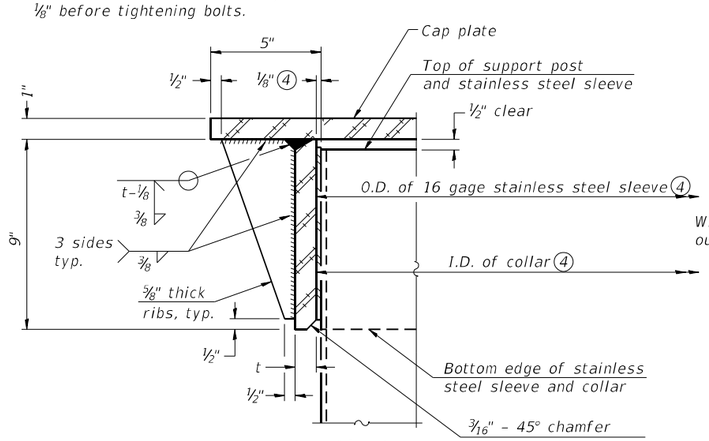

DETAIL A

(Two locations)

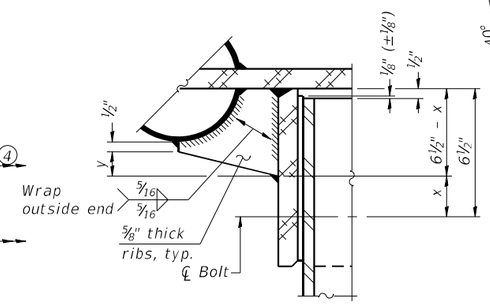

DETAIL B

Two locations
(For details not shown, see Detail C)

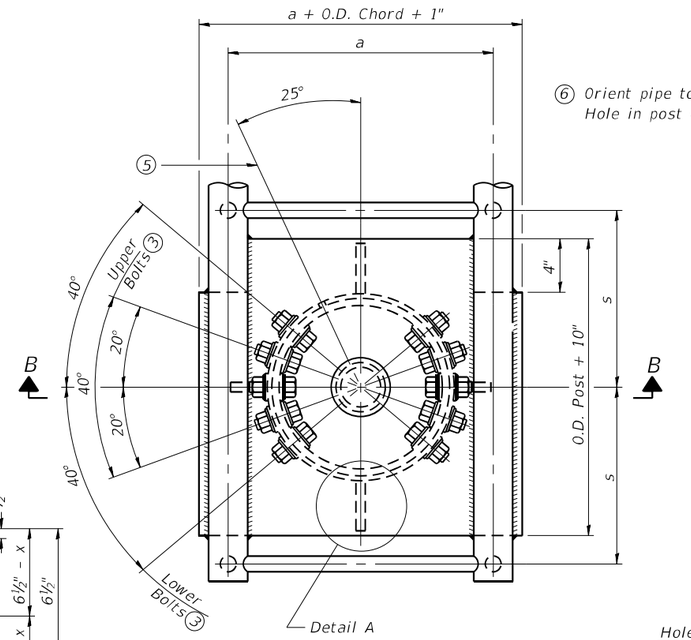

PLAN VIEW - TOP OF COLUMN

⑤ Optional full penetration weld in collar.
(Two locations maximum....(180° apart)....X-ray or UT 100%)

⑥ Orient pipe toward walkway side.
Hole in post = O.D. pipe + ⅛".

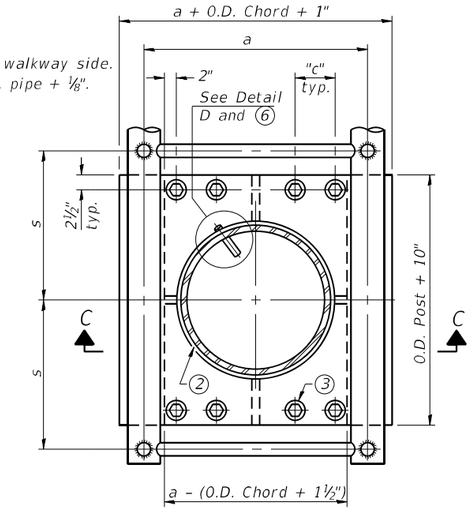

SECTION THRU POST ABOVE LOWER CHORDS

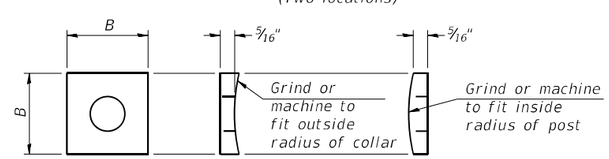

CONTOURED WASHERS

Bolt Size	Contoured Washers	
	Hole Dia.	B
⅞"	1"	2½"
1"	1⅛"	3"
1¼"	1⅜"	3¼"

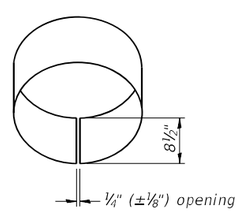

DETAIL OF STAINLESS STEEL SLEEVE

Weld to post after galvanizing.
(Prepare post surface to insure tight, uniform fit and allow welding.)
Welds to be 1½" long at 6" cts. along top edge and at ¼" opening.

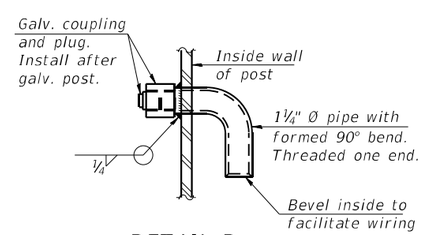

DETAIL D

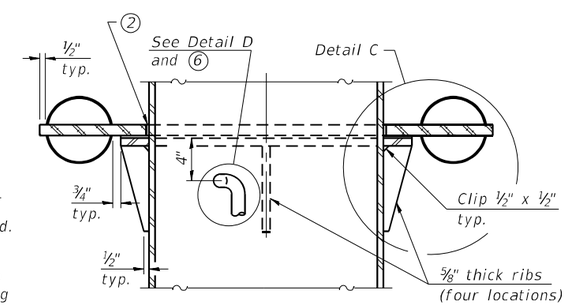

SECTION C-C

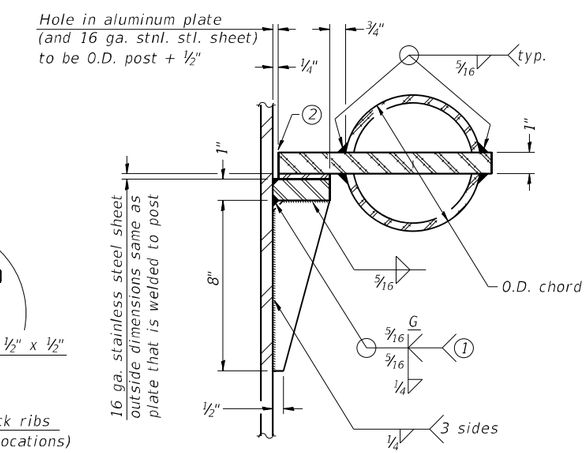

DETAIL C

Truss Type	Post Size	Upper & Lower Connection Bolt Diameter③	Lower Juncture Bolt Spacing Dimension "c"③	Opening in Cap Plate "HH"	Collar Thickness (t)	Side Ribs	
						x	y
I-C-A	16" Ø (83#/')	⅞"	3¼"	8"	⅝"	1¾"	2¼"
II-C-A	24" Ø (125#/')	1"	3½"	12"	⅞"	2"	1¼"
III-C-A (35' max.)	24" Ø (125#/')	1¼"	3½"	12"	⅞"	2"	1"
III-C-A (>35' to 40')	24" Ø (171#/')	1¼"	3½"	12"	⅞"	2"	1"

① Grind top if required to fully seat aluminum plate and stainless steel sheet.

② After tightening lower connection bolts, fill gap with non-hardening, silicone caulk suitable for exterior exposure and acceptable to the Engineer. Cost is included in Overhead Sign Structure Cantilever.

③ Upper and lower connection bolts in collar and bolts at lower chord connection shall be high strength with matching locknuts. Connection bolts shall have 2 stainless steel flat washers each.

OSC-A-3 2-17-2017

QUIGG ENGINEERING INC

USER NAME = JCray	DESIGNED - ZLD	REVISED -	
D264C24-SHT-004-Cantilever Juncture Details.dgn	CHECKED - KWB	REVISED -	
PLOT SCALE = 0.1667 ' / in.	DRAWN - ZLD	REVISED -	
PLOT DATE = 2/10/2025	CHECKED - MDC	REVISED -	

STATE OF ILLINOIS
DEPARTMENT OF TRANSPORTATION

CANTILEVER SIGN STRUCTURES - JUNCTURE DETAILS
ALUMINUM TRUSS & STEEL POST

SHEET 4 OF 8 SHEETS

F.A.I. RTE.	SECTION	COUNTY	TOTAL SHEETS	SHEET NO.
39	(201-3)R & (4-1.5)R	WINNEBAGO	1685	463

CONTRACT NO. 64C24

ILLINOIS FED. AID PROJECT

MODEL: Default
FILE NAME: c:\pwworkdir\benesch projects\projects\d0183648\D264C24-SHT-004-Cantilever Juncture Details.dgn
2/9/2025 2:58:14 PM

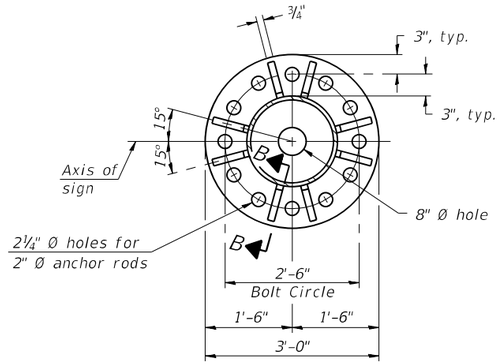

SECTION A-A

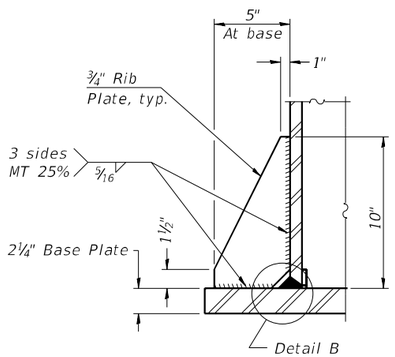

SECTION B-B

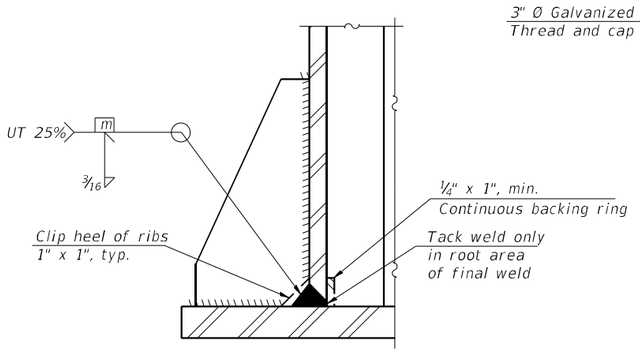

DETAIL B

(Typical rib)

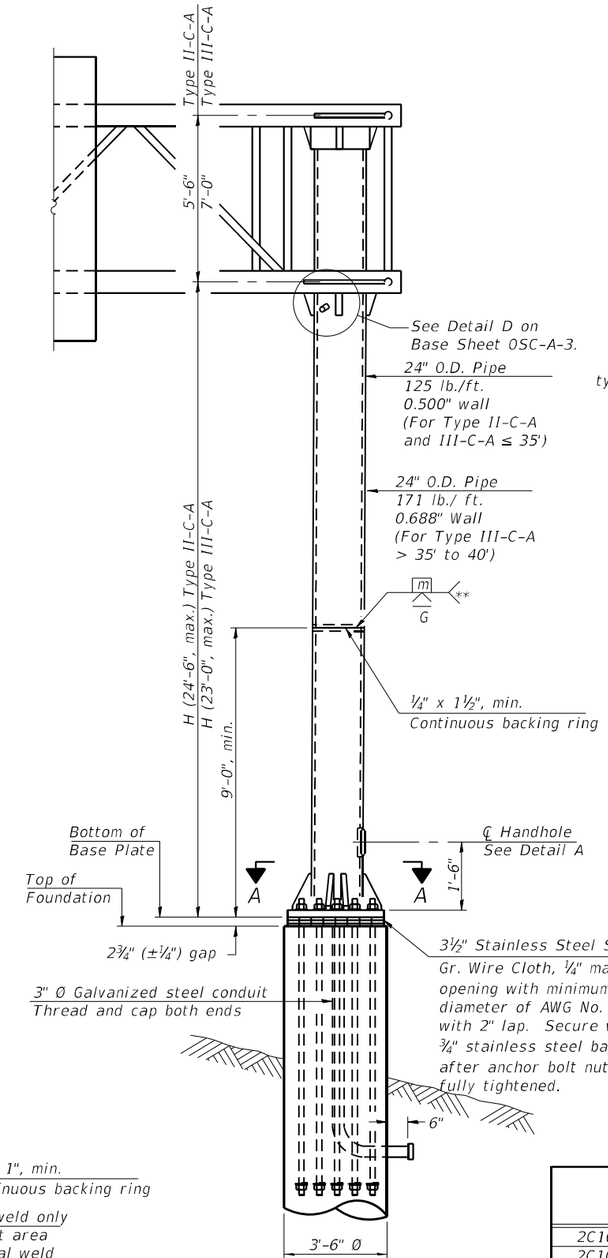

FRONT ELEVATION

For Foundation Details see Base Sheet OSC-A-9.

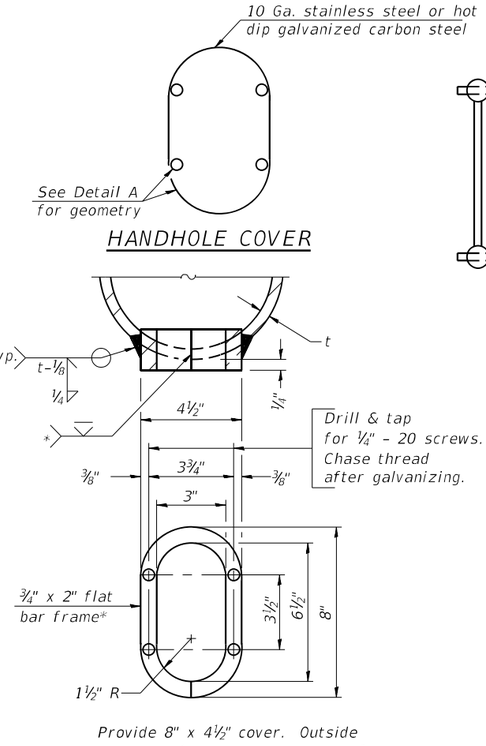

HANDHOLE COVER

DETAIL A

* Bent bars may be butt welded top and bottom or bottom only. In lieu of fabricated handhole frame as shown, may cut from 2" plate (rolling direction vertical). All cut faces to be ground to ANSI Roughness of 500μ in or less.

** Butt welded joint in post is only allowed for post heights (H) over 20 ft. in length. If used, weld procedure must be preapproved by Engineer and joint shall receive 100% RT or UT (tension criteria) at Contractor's expense.

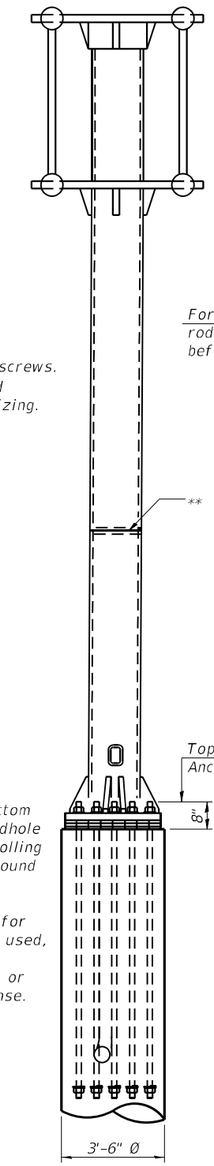

SIDE ELEVATION

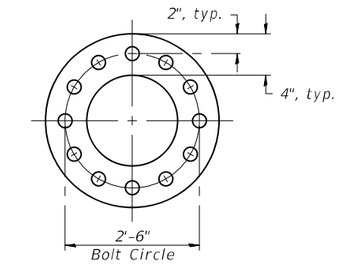

SUGGESTED POSITIONING PLATE

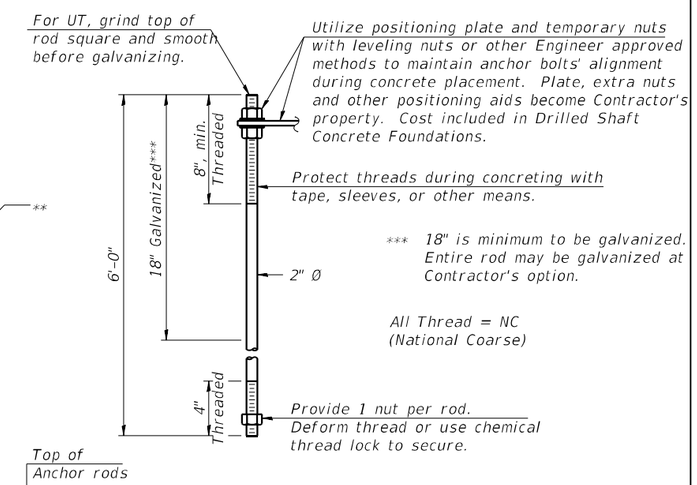

ANCHOR ROD DETAIL

Anchor rods shall conform to ASTM F1554 Grade 105. Galvanize the upper 18" (minimum***) and associated AASHTO M291, Grade A, C or DH heavy hex nuts and hardened washers per AASHTO M232. No welding shall be permitted on rods. Provide a nut at bottom, a hexagon locknut and washer above base plate and a leveling nut and washer below base plate. Nuts shall each be tightened with 200 lb.-ft. minimum torque against base plate. Before or after threading, but before galvanizing, each anchor rod shall be ultrasonically tested (UT) by a Level II or III inspector, qualified in accord with ANSI guidelines, to insure no rejectable flaws exist in the upper 18" (tension criteria). Cost of testing included in Drilled Shaft Concrete Foundations.

Structure Number	Station	H
2C101I039R121.8	2719+25	21'-7"
2C101U020L024.8	152+25	18'-7"

Note: "H" based on 15'-0" or actual sign height, whichever is greater.

OSC-A-5 2-17-2017

QUIGG ENGINEERING INC

USER NAME = JCray	DESIGNED - ZLD	REVISED -	
D264C24-SHT-005-Cantilever Truss Support Post.dgn	CHECKED - KWB	REVISED -	
PLOT SCALE = 0.1667 ' / in.	DRAWN - ZLD	REVISED -	
PLOT DATE = 2/10/2025	CHECKED - MDC	REVISED -	

STATE OF ILLINOIS
DEPARTMENT OF TRANSPORTATION

CANTILEVER SIGN STRUCTURES – TYPE II-C-A & III-C-A
TRUSS SUPPORT POST – ALUMINUM TRUSS & STEEL POST

SHEET 5 OF 8 SHEETS

F.A.I. RTE.	SECTION	COUNTY	TOTAL SHEETS	SHEET NO.
39	(201-3)R & (4-1.5)R	WINNEBAGO	1685	464

CONTRACT NO. 64C24

ILLINOIS FED. AID PROJECT

MODEL: Default
FILE NAME: c:\pwworkdir\benesch projects\projects\d0183648\D264C24-SHT-005-Cantilever Truss Support Post.dgn
2/9/2025 2:58:27 PM

* Grind anchor rod to bright finish at ground clamp location before installing clamp.

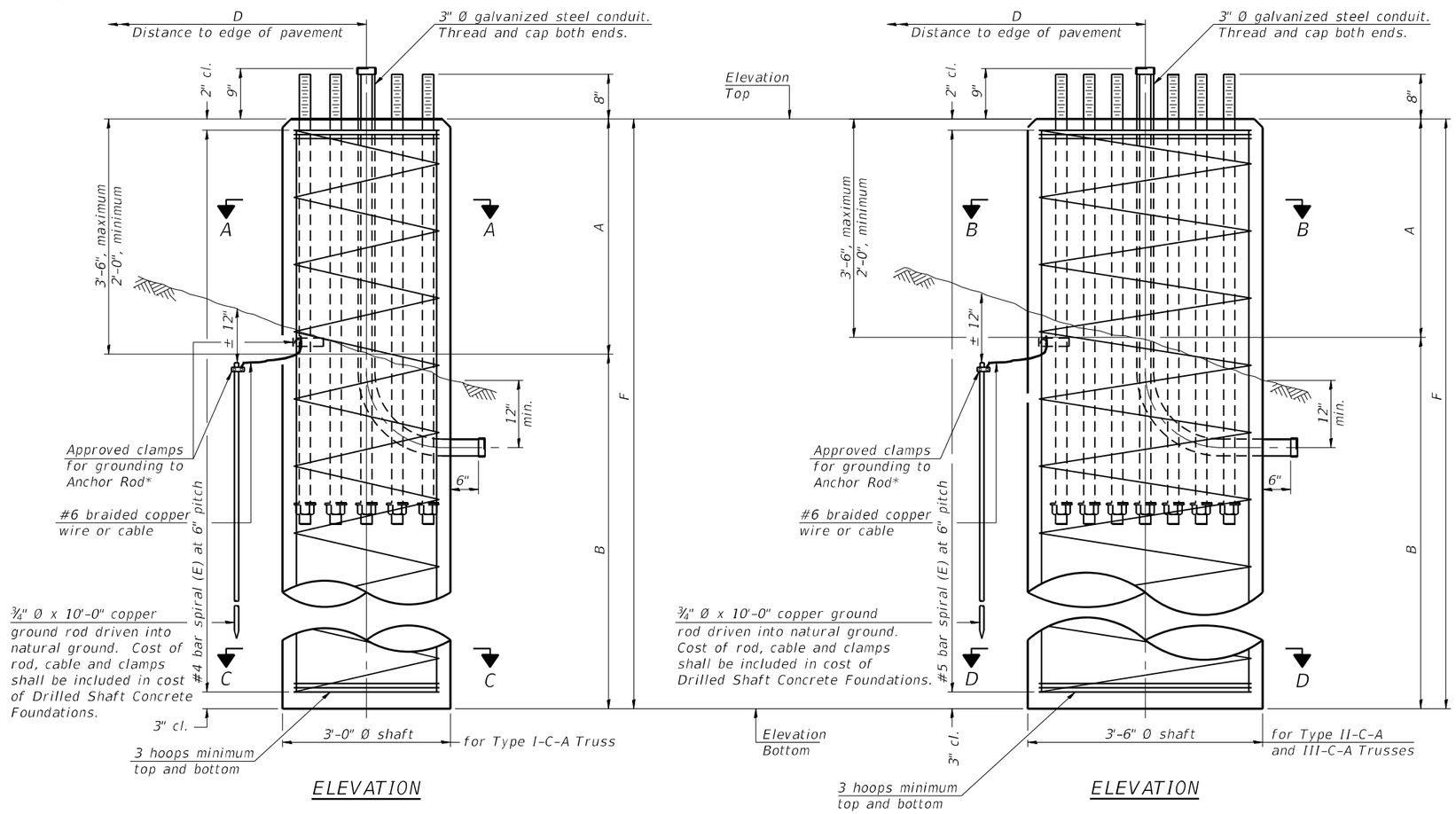

ELEVATION

ELEVATION

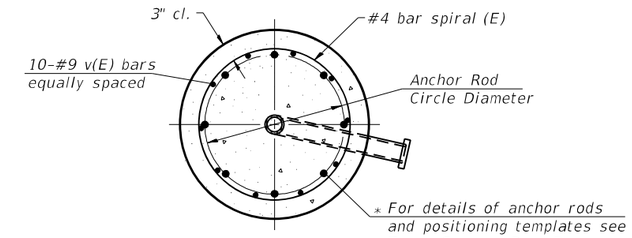

SECTION A-A

3'-0" Ø shaft

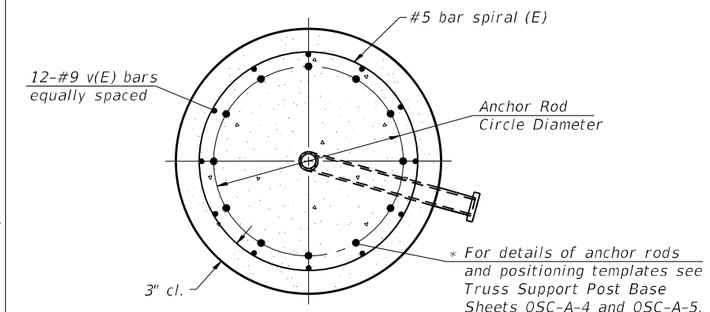

SECTION B-B

3'-6" Ø shaft

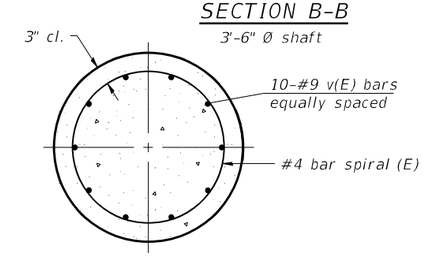

SECTION C-C

3'-0" Ø shaft

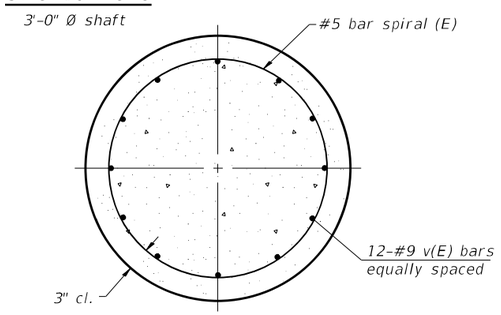

SECTION D-D

3'-6" Ø shaft

NOTES:

The foundation dimensions shown in the Foundation Design Table are based on the presence of mostly cohesive soils with an average Unconfined Compressive Strength (Qu) of at least 1.25 tsf, which must be determined by previous soil investigations at the jobsite. When other conditions are indicated, the boring data will be included in the plans and the foundation dimensions shown in the Foundation Data Table will be the result of site specific designs.

If the conditions encountered are different than those indicated, the Contractor shall notify the Engineer to determine if the foundation dimensions need to be modified. If dimensions "B" or "F" are revised by more than 12" by the Contractor, "as-built" plans shall be prepared and submitted to the District Bureau of Operations for future reference.

No sonotubes or decomposable forms shall be used below the lower conduit entrance. Permanent metal forms or other shielding may not be left in place below that elevation without the Engineer's written permission.

Concrete shall be placed monolithically, without construction joints.

Backfill shall be placed per Article 502 of Standard Specification and prior to erection of support column.

A normal surface finish followed by a Concrete Sealer application will be required on concrete surfaces above the lowest elevation 6" below finished ground line. Cost included in "Drilled Shaft Concrete Foundation".

FOUNDATION DESIGN TABLE

Truss Type	Post Base Sheet	Maximum Cantilever Length (ft)	Maximum Total Sign Area (sq ft)	Shaft Diameter (in)	"B" Depth (ft)	Anchor Rods No.	Anchor Rods Diameter (in)	Anchor Rod Circle Diameter (in)
I-C-A	OSC-A-4	25	170	3.0	16.0	8	2	22
II-C-A	OSC-A-5	30	170	3.5	17.0	12	2	30
II-C-A	OSC-A-5	30	340	3.5	21.5	12	2	30
III-C-A	OSC-A-5	35	170	3.5	19.0	12	2	30
III-C-A	OSC-A-5	35	250	3.5	22.5	12	2	30
III-C-A	OSC-A-5	35	400	3.5	26.5	12	2	30
III-C-A	OSC-A-5	40	400	3.5	32.0	12	2	30

FOUNDATION DATA TABLE

Structure Number	Station	Truss Type	Shaft Diameter	Elevation Top	Elevation Bottom	Qu	A	B	F	Class DS Concrete Cubic Yards
2C101I039R121.8	2719+25	III-C-A	3'-6"	793.28	757.78	2.58	3'-6"	32'-0"	35'-6"	12.7
2C101U020L024.8	152+25	III-C-A	3'-6"	782.61	756.61	3.46	3'-6"	22'-6"	26'-0"	9.3

OSC-A-9 2-17-2017

MODEL: Default
FILE NAME: c:\pwworkdir\benesch projects\projects\d0183648\D264C24-SHT-006-Cantilever Drilled Shaft.dgn
2/9/2025 2:58:40 PM

QUIGG ENGINEERING INC

USER NAME = JCray	DESIGNED - ZLD	REVISED -	
D264C24-SHT-006-Cantilever Drilled Shaft.dgn	CHECKED - KWB	REVISED -	
PLOT SCALE = 0.1667 ' / in.	DRAWN - ZLD	REVISED -	
PLOT DATE = 2/10/2025	CHECKED - MDC	REVISED -	

STATE OF ILLINOIS
DEPARTMENT OF TRANSPORTATION

CANTILEVER SIGN STRUCTURES – DRILLED SHAFT
ALUMINUM TRUSS & STEEL POST

SHEET 6 OF 8 SHEETS

F.A.I. RTE.	SECTION	COUNTY	TOTAL SHEETS	SHEET NO.
39	(201-3)R & (4-1.5)R	WINNEBAGO	1685	465

CONTRACT NO. 64C24

ILLINOIS | FED. AID PROJECT

Illinois Department of Transportation
Division of Highways
Illinois Department of Transportation/D-2

SOIL BORING LOG

Date 1/24/12

ROUTE FAP 301 DESCRIPTION 101-0071 0072 I-39 Bridge over Harrison Road, .6 miles west of Mill Road LOGGED BY W. Garza

SECTION (201-3) K (4-1, 5) K LOCATION Rockford Twp. - 35SE, SEC. , TWP. 44N, RNG. 2E

COUNTY Winnebago DRILLING METHOD Hollow Stem Auger HAMMER TYPE B-53 Diedrich Automatic

STRUCT. NO. 101-0071/0072
Station
BORING NO. B-1
Station 50+92 - Harrison Avenue
Offset 88.00ft Rt CL
Ground Surface Elev. 775.81 ft

Surface Water Elev. ft
Stream Bed Elev. ft
Groundwater Elev.:
First Encounter ft
Upon Completion ft
After Hrs. ft

Description	Elev.	DEPTH (ft)	BLOWS (/6")	UCS Qu (tsf)	MOIST (%)
MEDIUM tan SANDY LOAM	773.81			0.9 P	9.0
MEDIUM tan fine dry SAND	771.81		8 11 14		
VERY DENSE tan fine SAND with GRAVEL	768.81	-5	9 30 35		
DENSE tan SANDY LOAM TILL	766.81		17 14 19		9.0
DENSE tan SANDY LOAM TILL	764.31	-10	13 14 20		9.0
VERY STIFF tan SANDY LOAM TILL	761.81		10 14 18	2.4 S	9.0
DENSE tan SANDY LOAM TILL	758.81	-15	13 13 17	4.0 P	13.0
DENSE tan fine SAND	756.81	-20	12 13 18		
DENSE tan clean medium coarse dry SAND	754.31		10 16 22		
DENSE tan clean medium coarse SAND with GRAVEL	751.81	-25	15 21 26		
VERY DENSE tan clean medium coarse SAND with GRAVEL	748.81		26 23 32		
STIFF tan SANDY LOAM TILL with SAND lens	746.31		10 8 31	1.7 B	17.0
VERY DENSE tan dry SANDY GRAVEL	743.81	-30	33 34 38		
HARD tan LOAM TILL with SAND lens	741.81		13 17 20	4.3 P	11.0
VERY STIFF tan LOAM TILL with dirty SANDY GRAVEL	739.31	-35	19 19 17	3.1 P	13.0
VERY DENSE tan dirty SANDY GRAVEL	736.81	-40	24 24 30		

The Unconfined Compressive Strength (UCS) Failure Mode is indicated by (B-Bulge, S-Shear, P-Penetrometer)
The SPT (N value) is the sum of the last two blow values in each sampling zone (AASHTO T206)

BBS, from 137 (Rev. 8-99)

Illinois Department of Transportation
Division of Highways
Illinois Department of Transportation/D-2

SOIL BORING LOG

Date 1/24/12

ROUTE FAP 301 DESCRIPTION 101-0071 0072 I-39 Bridge over Harrison Road, .6 miles west of Mill Road LOGGED BY W. Garza

SECTION (201-3) K (4-1, 5) K LOCATION Rockford Twp. - 35SE, SEC. , TWP. 44N, RNG. 2E

COUNTY Winnebago DRILLING METHOD Hollow Stem Auger HAMMER TYPE B-53 Diedrich Automatic

STRUCT. NO. 101-0071/0072
Station
BORING NO. B-1
Station 50+92 - Harrison Avenue
Offset 88.00ft Rt CL
Ground Surface Elev. 775.81 ft

Surface Water Elev. ft
Stream Bed Elev. ft
Groundwater Elev.:
First Encounter ft
Upon Completion ft
After Hrs. ft

Description	Elev.	DEPTH (ft)	BLOWS (/6")	UCS Qu (tsf)	MOIST (%)
DENSE tan moist SANDY GRAVEL	734.31		18 23 27		
End of Boring		-45 -50 -55 -60			

The Unconfined Compressive Strength (UCS) Failure Mode is indicated by (B-Bulge, S-Shear, P-Penetrometer)
The SPT (N value) is the sum of the last two blow values in each sampling zone (AASHTO T206)

BBS, from 137 (Rev. 8-99)

MODEL: Default
FILE NAME: c:\pwworkdir\benesch projects\projects\d0183648\D264C24-SHT-007-Cantilever Boring.dgn

QUIGG ENGINEERING INC

USER NAME = JCray	DESIGNED - ZLD	REVISED -	
D264C24-SHT-007-Cantilever Boring.dgn	CHECKED - KWB	REVISED -	
PLOT SCALE = 0.1667 ' / in.	DRAWN - ZLD	REVISED -	
PLOT DATE = 2/10/2025	CHECKED - MDC	REVISED -	

STATE OF ILLINOIS
DEPARTMENT OF TRANSPORTATION

SOIL BORING LOGS
OVERHEAD SIGN STRUCTURES

SHEET 7 OF 8 SHEETS

F.A.I. RTE.	SECTION	COUNTY	TOTAL SHEETS	SHEET NO.
39	(201-3)R & (4-1,5)R	WINNEBAGO	1685	466

CONTRACT NO. 64C24

ILLINOIS FED. AID PROJECT

2/9/2025 2:58:52 PM

Illinois Department of Transportation
Division of Highways
IDOT

SOIL BORING LOG

Date 1/4/24

ROUTE FAI 39 DESCRIPTION P92-111-06 - Various sign trusses or Bypass 20 LOGGED BY W. Garza

SECTION (201-3)K LOCATION Cherry Valley, NE 1/4 10, SE 1/4 3, SW 1/4, N 1/2 2, SEC. , TWP. 43N, RNG. 2E

COUNTY Winnebago DRILLING METHOD Hollow Stem Auger HAMMER TYPE CME-75 Automatic

STRUCT. NO.
Station

Latitude 42° 14' 16.97" Northing 2,031,555.4740
Longitude -88° 58' 00.33" Easting 2,621,507.3910

BORING NO. ST-1
Station 2719+25
Offset 60.00ft NB Rt
Ground Surface Elev. 791.10 ft

Surface Water Elev. ft
Stream Bed Elev. ft

Groundwater Elev.:
First Encounter None ft
Upon Completion Dry ft
After Hrs. ft

Description	Elev.	DEPTH (ft)	BLOWS (/6")	UCS Qu (tsf)	MOIST (%)
Asphalt	790.10			0.6 P	8.0
MEDIUM light gray SANDY LOAM	789.10				
VERY STIFF gray CLAY LOAM with SAND LENS	787.60		5 9 9	2.3 B	20.0
VERY STIFF tan SANDY LOAM 5' Run	785.10	-5	4 6 8	2.3 S	12.0
HARD dark gray SILTY LOAM with SANDY LOAM (FILL) 5' Run	780.10	-10	4 6 8	4.1 P	20.0
VERY STIFF gray SANDY LOAM 5' Run	775.10	-15	3 7 12	3.3 S	10.0
		-20	5		
VERY STIFF tan SANDY LOAM TILL	770.10		7 11	2.6 P	7.0
5' Run *(continued)*					
STIFF tan SANDY LOAM TILL with FINE SAND BOTTOM 3"	765.10	-25	15 17 19	1.4 S	7.0
End of Boring		-30			
		-35			
		-40			

Northing and Easting were calculated using the ILHP-WF coordinate system

The Unconfined Compressive Strength (UCS) Failure Mode is indicated by (B-Bulge, S-Shear, P-Penetrometer)
The SPT (N value) is the sum of the last two blow values in each sampling zone (AASHTO T206)

BBS, from 137 (Rev. 8-99)

MODEL: Default
FILE NAME: c:\pwworkdir\benesch projects\projects\d0183648\D264C24-SHT-008-Cantilever Boring.dgn

QUIGG ENGINEERING INC

USER NAME = JCray	DESIGNED - ZLD	REVISED -	
D264C24-SHT-008-Cantilever Boring.dgn	CHECKED - KWB	REVISED -	
PLOT SCALE = 0.1667 ' / in.	DRAWN - ZLD	REVISED -	
PLOT DATE = 2/10/2025	CHECKED - MDC	REVISED -	

STATE OF ILLINOIS
DEPARTMENT OF TRANSPORTATION

SOIL BORING LOGS
OVERHEAD SIGN STRUCTURES
SHEET 8 OF 8 SHEETS

F.A.I. RTE.	SECTION	COUNTY	TOTAL SHEETS	SHEET NO.
39	(201-3)R & (4-1,5)R	WINNEBAGO	1685	467
		CONTRACT NO. 64C24		
		ILLINOIS	FED. AID PROJECT	

2/9/2025 2:59:31 PM

LANDSCAPING GENERAL NOTES

1. THE CONTRACTOR SHALL TAKE ALL NECESSARY PRECAUTIONS FOR THE PROTECTION OF EXISTING PLANTS MATERIAL FOR WHICH THE CONTRACT DOES NOT PROVIDE REMOVAL. THE PROTECTION OF EXISTING PLANT MATERIAL AND THE REPAIR OR REPLACEMENT OF EXISTING PLANT MATERIAL DAMAGED BY THE CONTRACTOR SHALL BE DONE IN ACCORDANCE WITH THE REQUIREMENTS OF SECTION 201 OF THE STANDARD SPECIFICATIONS.

2. THE SEEDING DATES FOR BARE EARTH SEEDING SHALL BE FROM MAY 15 TO JUNE 30 AND OCTOBER 15 TO DECEMBER 1, ALL SEEDING NOT SOWN ACCORDING TO THE SPECIFIED SEASONAL DATES SHALL REQUIRE PRIOR WRITTEN APPROVAL FROM THE ENGINEER, FAILURE TO SECURE SUCH APPROVAL SHALL RESULT IN THE REJECTION OF THE SEEDING AND REPLACEMENT BY THE CONTRACTOR AT THEIR OWN EXPENSE.

3. TURF REINFORCEMENT MAT WILL BE PLACED ON SLOPES 3:1 AND GREATER. MULCH WILL BE PLACED ON SLOPES LESS THAN 3:1.

4. SEE EROSION AND SEDIMENT CONTROL AND DRAINAGE PLANS FOR MORE INFORMATION ON EROSION CONTROL BLANKETS AND TURF REINFORCEMENT MATS LOCATED ON SLOPES STEEPER THAN 3:1 AND ALONG DTICH LINES.

5. ALL EROSION CONTROL BLANKET AND TURF REINFORCEMENT MAT WILL BE PLACED AS SHOWN IN THE EROSION AND SEDIMENT CONTROL PLANS AND WILL REMAIN IN PLACE EVEN IF PLACED DURING A TEMPORARY STAGE.

6. CLASS 4A AND 5 SEED SHALL BE USED ON ALL BACKSLOPES AND FORESLOPES ON THE PROJECT. PLEASE REFER TO SPECIAL PROVISION FOR ADDITIONAL INFORMATION AND FOLLOW THE SPECS IN SECTION 250 IN THE MANUAL FOR ANY TEMPORARY DISTURBANCE WITHIN THE PROJECT LIMITS. CLASS 5 INTERSEEDING SHALL BE PAID FOR AS SEEDING, CLASS 5.

7. HERBICIDE FOR CLASS 5 INTERSEEDING SHALL BE APPLIED FIRST BEFORE PLANTING ANY PERMANENT SEEDING.

TYPICAL ROADSIDE DITCH SEEDING CROSS SECTION

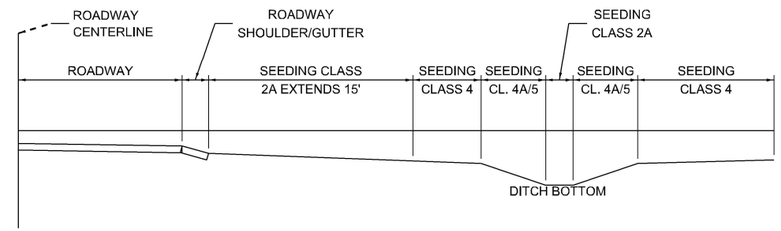

*FOR DITCHES THAT FALL WITHIN THE 15' OFFSET FROM THE ROADWAY, THE ENTIRE DITCH WILL BE CLASS 2A INCLUDING THE SIDESLOPES AND DITCH BOTTOMS. IN AREAS WHERE ONLY A PORTION OF THE DITCH FALLS WITHIN THE 15' OFFSET FROM THE ROADWAY, ONLY THE FORESLOPE AND DITCH BOTTOM WILL BE CLASS 2A, WHILE THE BACKSLOPE WILL BE CLASS 4A/5 SEEDING. FOR ANY AREAS WHERE THE SLOPE IS GREATER THAN 3:1, CLASS 4 SEEDING WILL BE USED REGARDLESS OF THE PROXIMITY TO THE ROADWAY OR LOCATION WITHIN A DITCHES.

TYPICAL RETENTION BASIN SEEDING CROSS SECTION

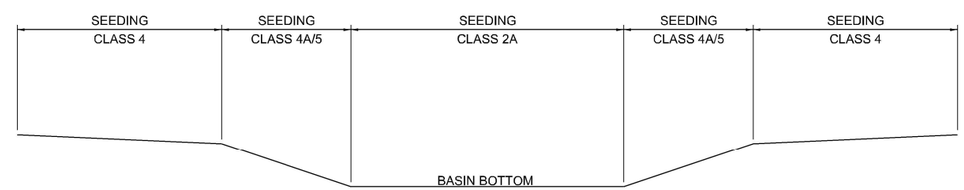

MODEL: LS General Notes [Sheet]
FILE NAME: c:\pwworking\benesch projects\projects\d0173917\ML LS GENERAL NOTES.dgn

Kaskaskia Engineering Group, LLC
PROFESSIONAL DESIGN FIRM
Illinois Professional Design Firm
Professional Engineering Group
209 E. Main St., Suite 100
Belleville, Illinois 62220
618.233.8477 phone
618.233.8477 fax
www.kaskaskiaeng.com
LICENSE NO.
184.004793
20-5000501

USER NAME = lfranceschina	DESIGNED - RJB	REVISED -	
	DRAWN - SRS	REVISED -	
PLOT SCALE = $SCALE$	CHECKED - RJB	REVISED -	
PLOT DATE = 8/12/2024	DATE - 02/14/2025	REVISED -	

STATE OF ILLINOIS
DEPARTMENT OF TRANSPORTATION

LANDSCAPING PLAN
GENERAL NOTES

SCALE: | SHEET 1 OF 18 SHEETS | STA. TO STA.

F.A.I RTE.	SECTION	COUNTY	TOTAL SHEETS	SHEET NO.
*	(201-3)R & (4-1.5)R	WINNEBAGO	1685	468
		CONTRACT NO. 64C24		
		ILLINOIS	FED. AID PROJECT	

* FAI ROUTE 39 (I-39) & FAP 301 (US 20)

LEGEND

- SEEDING CLASS 2A WITH MULCH METHOD 3A
- SEEDING CLASS 4 WITH MULCH METHOD 3A
- SEEDING CLASS 4A AND 5 WITH MULCH METHOD 3A
- SEEDING CLASS 4 WITH SLOPES 3:1 OR STEEPER AND TRM FROM PRIOR STAGES
- xxx' PROPOSED CONTOUR LINE
- PROPOSED DITCH FLOW ARROW
- EXISTING DITCH FLOW ARROW
- DITCH BOTTOM LIMITS

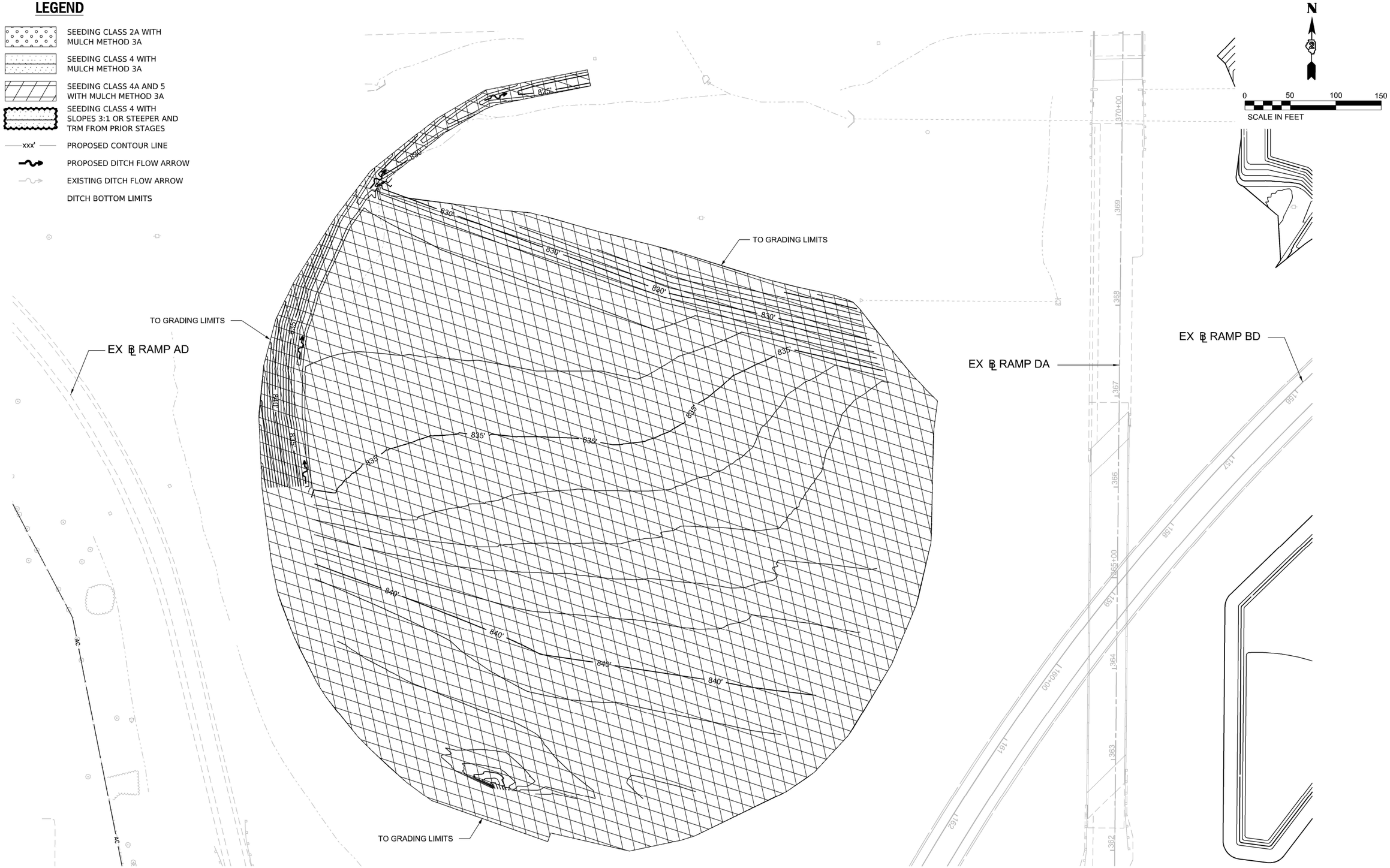

MODEL: Borrow Site Plan [Sheet]
FILE NAME: c:\pwworkl\benesch projects\projects\d0173917\D284C24-sht-Stockpile Site_LS.dgn

Kaskaskia Engineering Group, LLC
PROFESSIONAL ENGINEERS
Illinois Professional Design Firm
Professional Engineering Group
LICENSE NO.
184.004773
28-5550116

USER NAME = jMajcher	DESIGNED - RJB	REVISED -	
	DRAWN - SRS	REVISED -	
PLOT SCALE = $SCALE$	CHECKED - RJB	REVISED -	
PLOT DATE = 9/12/2024	DATE - 02/14/2025	REVISED -	

STATE OF ILLINOIS
DEPARTMENT OF TRANSPORTATION

LANDSCAPING PLAN
BORROW SITE

SCALE: SHEET 2 OF 18 SHEETS STA. TO STA.

F.A.I RTE.	SECTION	COUNTY	TOTAL SHEETS	SHEET NO.
*	(201-3)R & (4-1,5)R	WINNEBAGO	1685	469
		CONTRACT NO. 64C24		
		ILLINOIS	FED. AID PROJECT	

* FAI ROUTE 39 (I-39) & FAP 301 (US 20)

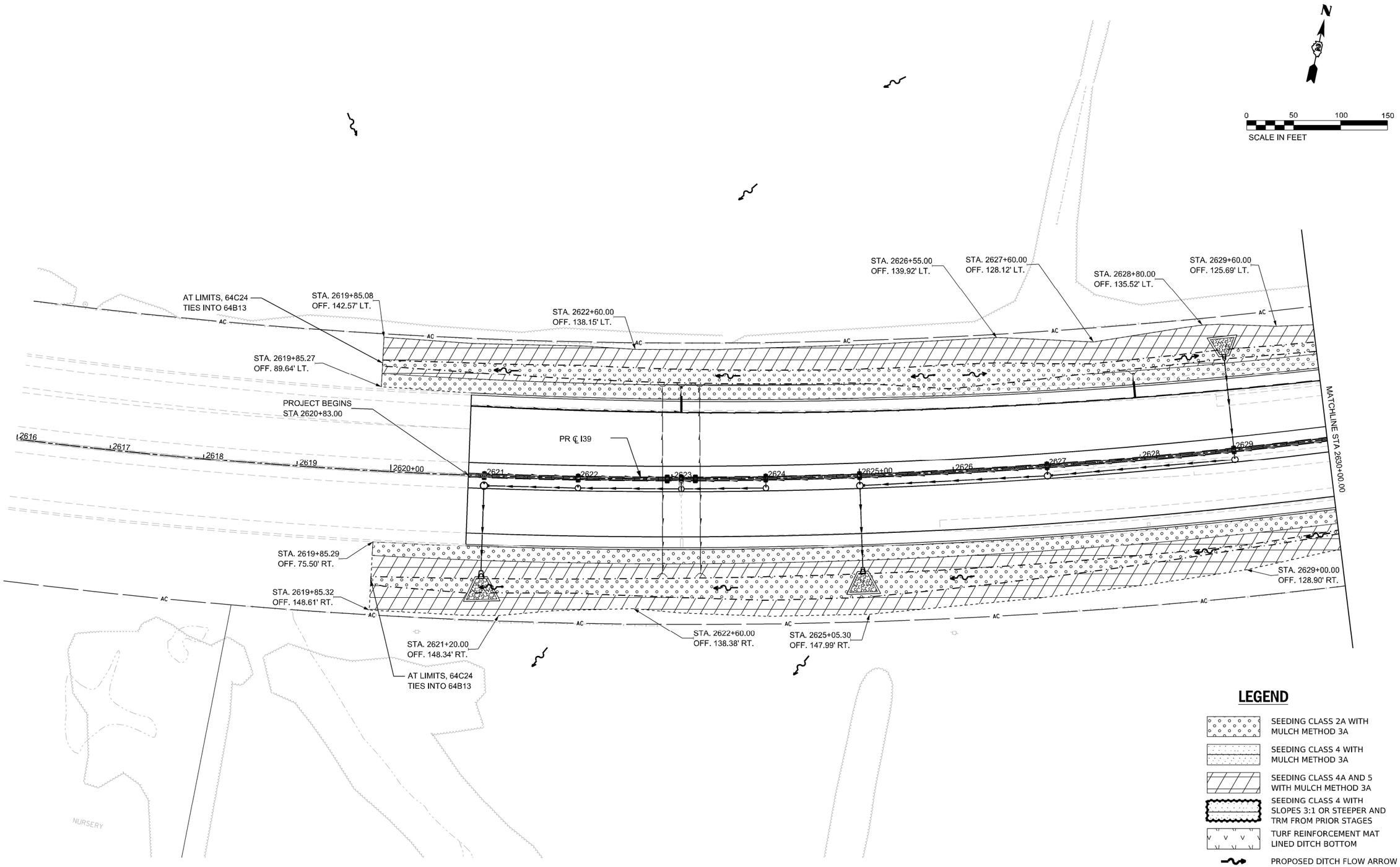

LEGEND

- SEEDING CLASS 2A WITH MULCH METHOD 3A
- SEEDING CLASS 4 WITH MULCH METHOD 3A
- SEEDING CLASS 4A AND 5 WITH MULCH METHOD 3A
- SEEDING CLASS 4 WITH SLOPES 3:1 OR STEEPER AND TRM FROM PRIOR STAGES
- TURF REINFORCEMENT MAT LINED DITCH BOTTOM
- PROPOSED DITCH FLOW ARROW
- EXISTING DITCH FLOW ARROW
- DITCH BOTTOM LIMITS

MODEL: I39 Wide - Plan 5 [Sheet]
FILE NAME: c:\pwworkdir\benesch projects\projects\d0173917\ML LANDSCAPE SHEETS.dgn

Kaskaskia Engineering Group, LLC
PROFESSIONAL REGISTRATIONS: Illinois Professional Design Firm Professional Engineering Group
LICENSE NO. 184.001151 20-5500595
200 E. Main St., Suite 320, Carbondale, Illinois 62901
618.533.5677 phone
618.233.5977 fax
www.kaskaskiaeng.com

USER NAME = sshuler	DESIGNED - RJB	REVISED -	
	DRAWN - SRS	REVISED -	
PLOT SCALE = $SCALE$	CHECKED - RJB	REVISED -	
PLOT DATE = 2/10/2025	DATE - 02/14/2025	REVISED -	

STATE OF ILLINOIS
DEPARTMENT OF TRANSPORTATION

LANDSCAPING PLAN
I-39/ US 20

SCALE: 1"=50' | SHEET 3 OF 18 SHEETS | STA. 2616+00.00 TO STA. 2630+00.00

F.A.I RTE.	SECTION	COUNTY	TOTAL SHEETS	SHEET NO.
*	(201-3)R & (4-1.5)R	WINNEBAGO	1685	470
		CONTRACT NO. 64C24		
	ILLINOIS	FED. AID PROJECT		

* FAI ROUTE 39 (I-39) & FAP 301 (US 20)

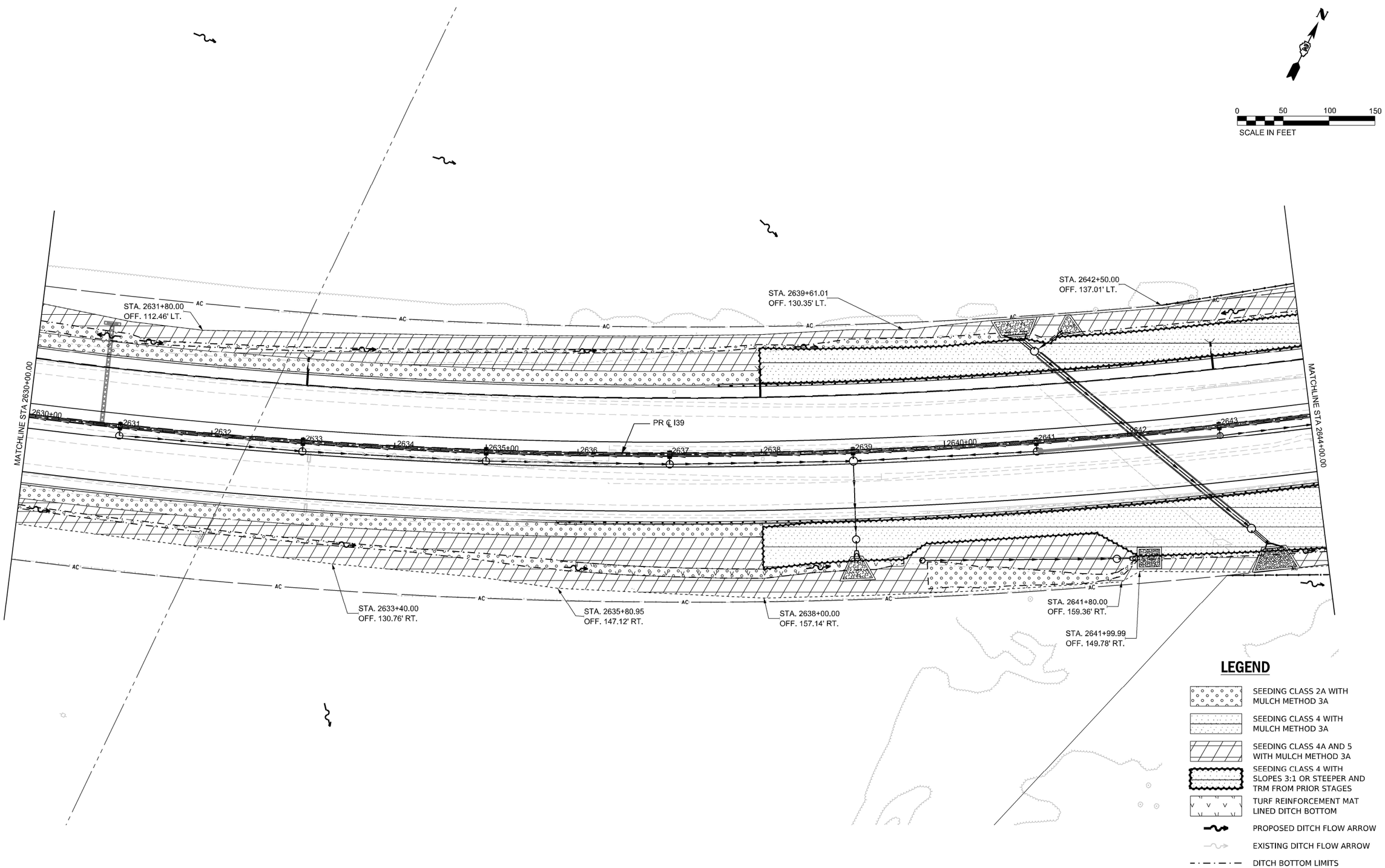

MODEL: I39 Wide - Plan 6 [Sheet]
FILE NAME: c:\pwworkl\benesch projects\projects\d0172917\ML LANDSCAPE SHEETS.dgn

Kaskaskia Engineering Group, LLC
PROFESSIONAL REGISTRATIONS: Illinois Professional Design Firm, Professional Engineering Group
LICENSE NO.: 184.001713, 20-5000585

USER NAME = bfernandez	DESIGNED - RJB	REVISED -	
	DRAWN - SRS	REVISED -	
PLOT SCALE = $SCALE$	CHECKED - RJB	REVISED -	
PLOT DATE = 2/7/2025	DATE - 02/14/2025	REVISED -	

STATE OF ILLINOIS
DEPARTMENT OF TRANSPORTATION

LANDSCAPING PLAN
I-39/ US 20

SCALE: 1"=50' | SHEET 4 OF 18 SHEETS | STA. 2630+00.00 TO STA. 2644+00.00

F.A.I RTE.	SECTION	COUNTY	TOTAL SHEETS	SHEET NO.
*	(201-3)R & (4-1,5)R	WINNEBAGO	1685	471

CONTRACT NO. 64C24

ILLINOIS | FED. AID PROJECT

* FAI ROUTE 39 (I-39) & FAP 301 (US 20)

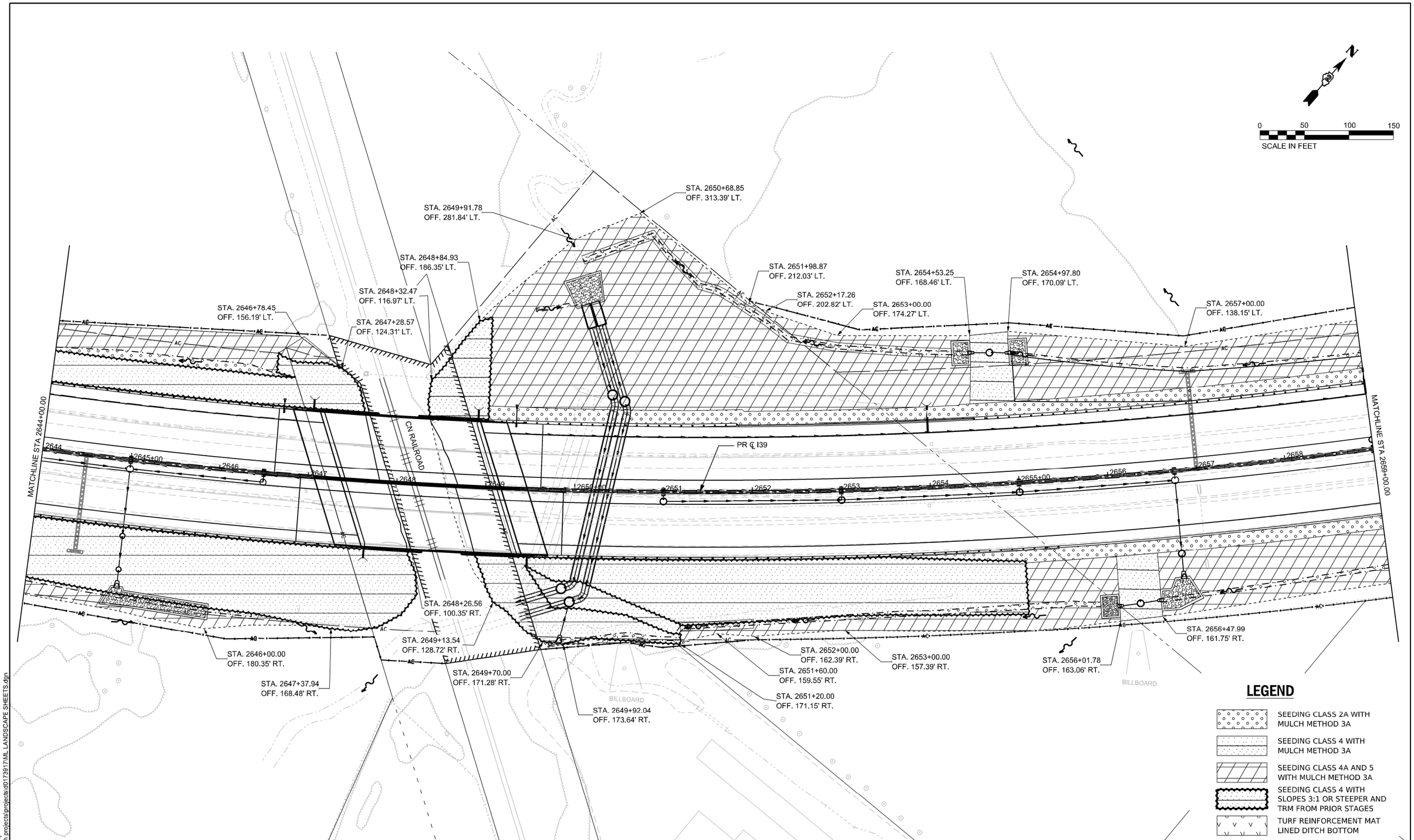

MODEL: I39 Wide - Plan 7 [Sheet]
FILE NAME: c:\pwworkl\benesch projects\projects\d0173917\ML LANDSCAPE SHEETS.dgn

Kaskaskia Engineering Group, LLC
PROFESSIONAL DESIGN FIRM
Illinois Professional Design Firm
Professional Engineering Group
LICENSE NO.
184.001973
20-5000501
208 E. Main St., Suite 100
Belleville, Illinois 62220
618.233.8477 phone
618.233.8477 fax
www.kaskaskiaeng.com

USER NAME = agibson	DESIGNED - RJB	REVISED -	
	DRAWN - SRS	REVISED -	
PLOT SCALE = $SCALE$	CHECKED - RJB	REVISED -	
PLOT DATE = 2/6/2025	DATE - 02/14/2025	REVISED -	

STATE OF ILLINOIS
DEPARTMENT OF TRANSPORTATION

LANDSCAPING PLAN
I-39/ US 20

SCALE: 1"=50' | SHEET 5 OF 18 SHEETS | STA. 2644+00.00 TO STA. 2659+00.00

F.A.I RTE.	SECTION	COUNTY	TOTAL SHEETS	SHEET NO.
*	(201-3)R & (4-1,5)R	WINNEBAGO	1685	472
		CONTRACT NO. 64C24		
		ILLINOIS	FED. AID PROJECT	

* FAI ROUTE 39 (I-39) & FAP 301 (US 20)

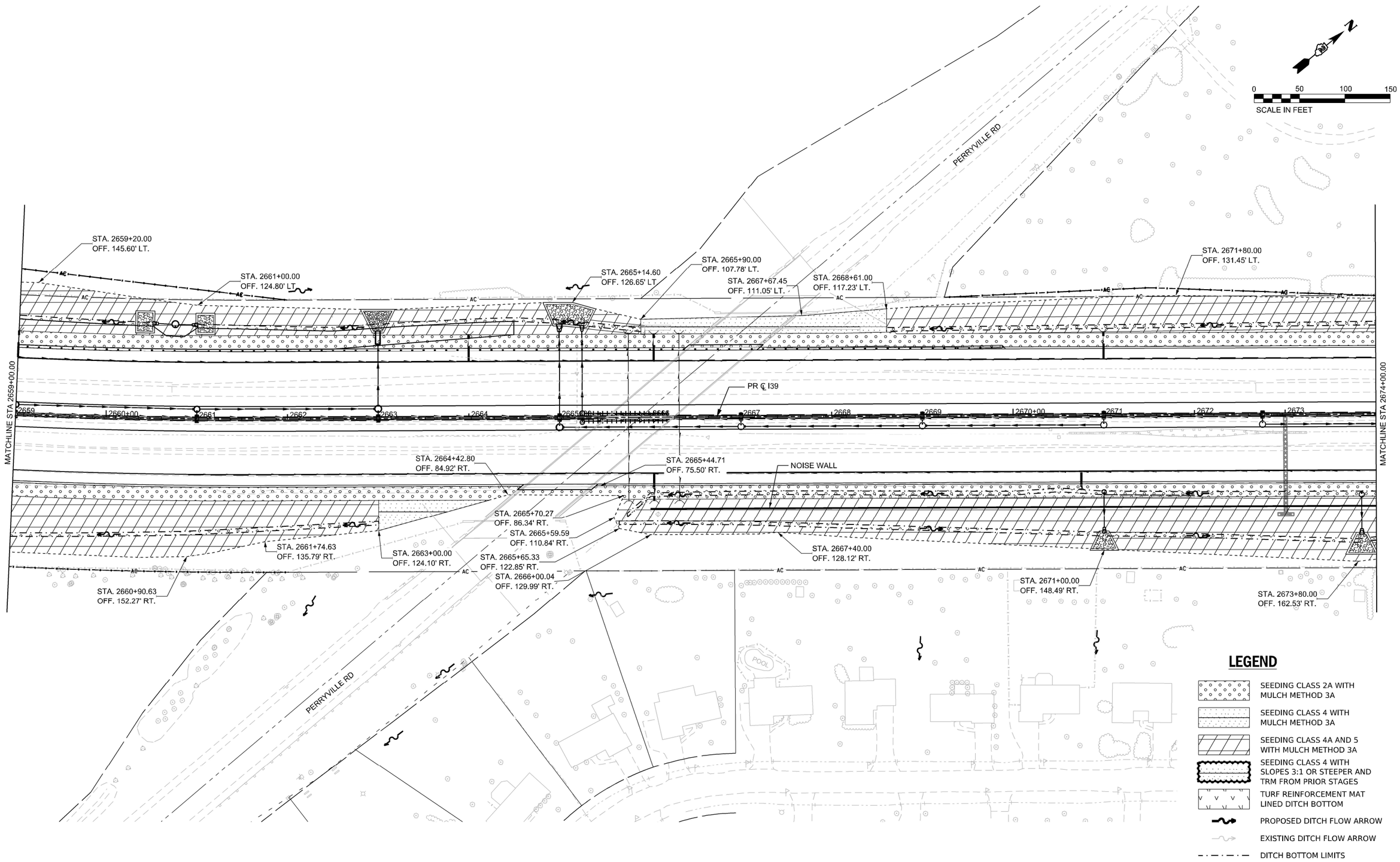

MODEL: I39 Wide - Plan 8 [Sheet]
FILE NAME: c:\pwworkir\benesch projects\projects\d0172917\ML LANDSCAPE SHEETS.dgn

Kaskaskia Engineering Group, LLC
PROFESSIONAL REGISTRATIONS: Illinois Professional Design Firm 184.001253; Professional Engineering Group 20-5000595
LICENSE NO.
200 E. Main St., Suite 200, Belleville, Illinois 62220
618.233.5877 phone
618.233.5977 fax
www.kaskaskiaeng.com

USER NAME = sshuler	DESIGNED - RJB	REVISED -	
	DRAWN - SRS	REVISED -	
PLOT SCALE = $SCALE$	CHECKED - RJB	REVISED -	
PLOT DATE = 2/10/2025	DATE - 02/14/2025	REVISED -	

STATE OF ILLINOIS
DEPARTMENT OF TRANSPORTATION

LANDSCAPING PLAN
I-39/ US 20

SCALE: 1"=50' | SHEET 6 OF 18 SHEETS | STA. 2659+00.00 TO STA. 2674+00.00

F.A.I RTE.	SECTION	COUNTY	TOTAL SHEETS	SHEET NO.
*	(201-3)R & (4-1,5)R	WINNEBAGO	1685	473
		CONTRACT NO. 64C24		
	ILLINOIS	FED. AID PROJECT		

* FAI ROUTE 39 (I-39) & FAP 301 (US 20)

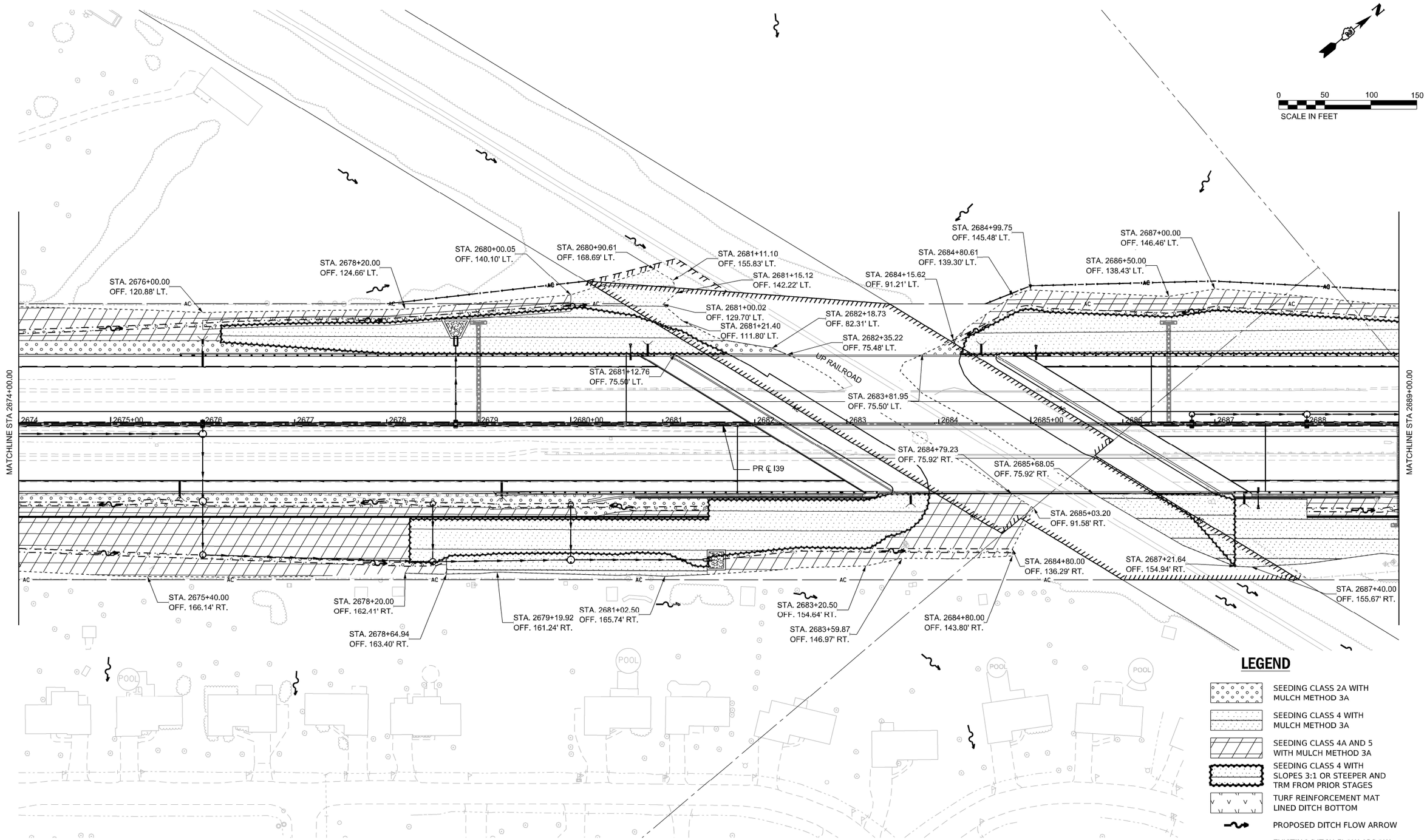

MODEL: I39 Wide - Plan 9 [Sheet]
FILE NAME: c:\pwworkir\benesch projects\projects\d0173917\ML LANDSCAPE SHEETS.dgn

Kaskaskia Engineering Group, LLC
PROFESSIONAL REGISTRATIONS: Illinois Professional Design Firm; Professional Engineering Group
LICENSE NO.: 184.001271; 20-5000595
200 E. Main St., Suite 200, Belleville, Illinois 62220; 618.233.5877 phone; 618.233.5977 fax; www.kaskaskieng.com

USER NAME = bfernandez	DESIGNED - RJB	REVISED -	
	DRAWN - SRS	REVISED -	
PLOT SCALE = $SCALE$	CHECKED - RJB	REVISED -	
PLOT DATE = 2/7/2025	DATE - 02/14/2025	REVISED -	

STATE OF ILLINOIS
DEPARTMENT OF TRANSPORTATION

LANDSCAPING PLAN
I-39/ US 20

SCALE: 1"=50' | SHEET 7 OF 18 SHEETS | STA. 2674+00.00 TO STA. 2689+00.00

F.A.I RTE.	SECTION	COUNTY	TOTAL SHEETS	SHEET NO.
*	(201-3)R & (4-1.5)R	WINNEBAGO	1685	474
		CONTRACT NO. 64C24		
	ILLINOIS	FED. AID PROJECT		

* FAI ROUTE 39 (I-39) & FAP 301 (US 20)

LEGEND

- SEEDING CLASS 2A WITH MULCH METHOD 3A
- SEEDING CLASS 4 WITH MULCH METHOD 3A
- SEEDING CLASS 4A AND 5 WITH MULCH METHOD 3A
- SEEDING CLASS 4 WITH SLOPES 3:1 OR STEEPER AND TRM FROM PRIOR STAGES
- TURF REINFORCEMENT MAT LINED DITCH BOTTOM
- PROPOSED DITCH FLOW ARROW
- EXISTING DITCH FLOW ARROW
- DITCH BOTTOM LIMITS

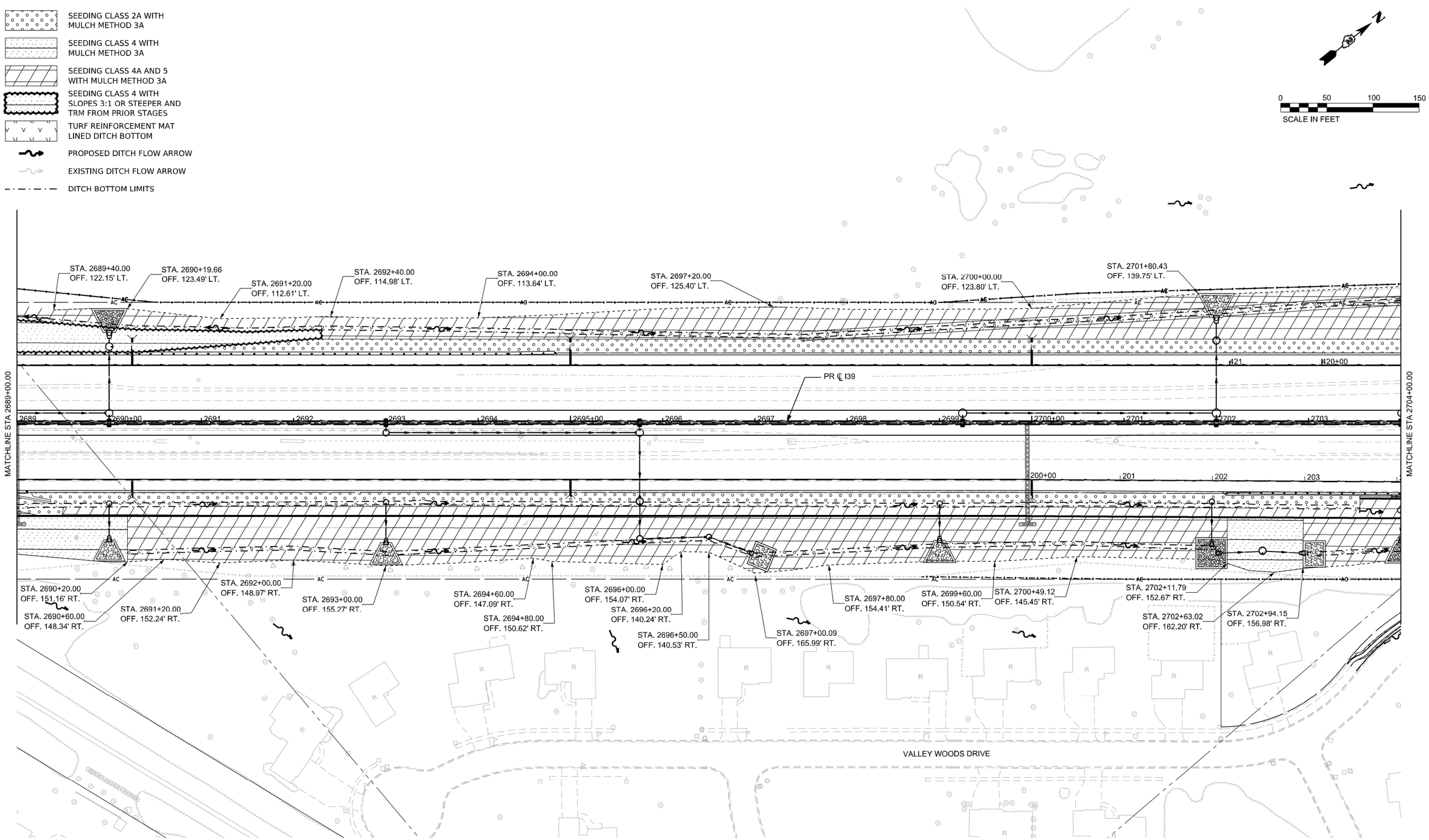

MODEL: I39 Wide - Plan 10 [Sheet]
FILE NAME: c:\pwworkir\benesch projects\projects\d0172917\ML LANDSCAPE SHEETS.dgn

Kaskaskia Engineering Group, LLC
PROFESSIONAL REGISTRATIONS: Illinois Professional Design Firm; Professional Engineering Group
LICENSE NO.: 184.001273; 20-5000595

USER NAME = agibson	DESIGNED - RJB	REVISED -	
	DRAWN - SRS	REVISED -	
PLOT SCALE = $SCALE$	CHECKED - RJB	REVISED -	
PLOT DATE = 2/6/2025	DATE - 02/14/2025	REVISED -	

STATE OF ILLINOIS
DEPARTMENT OF TRANSPORTATION

LANDSCAPING PLAN
I-39/ US 20

SCALE: 1"=50' | SHEET 8 OF 18 SHEETS | STA. 2689+00.00 TO STA. 2704+00.00

F.A.I RTE.	SECTION	COUNTY	TOTAL SHEETS	SHEET NO.
*	(201-3)R & (4-1,5)R	WINNEBAGO	1685	475
		CONTRACT NO. 64C24		
	ILLINOIS	FED. AID PROJECT		

* FAI ROUTE 39 (I-39) & FAP 301 (US 20)

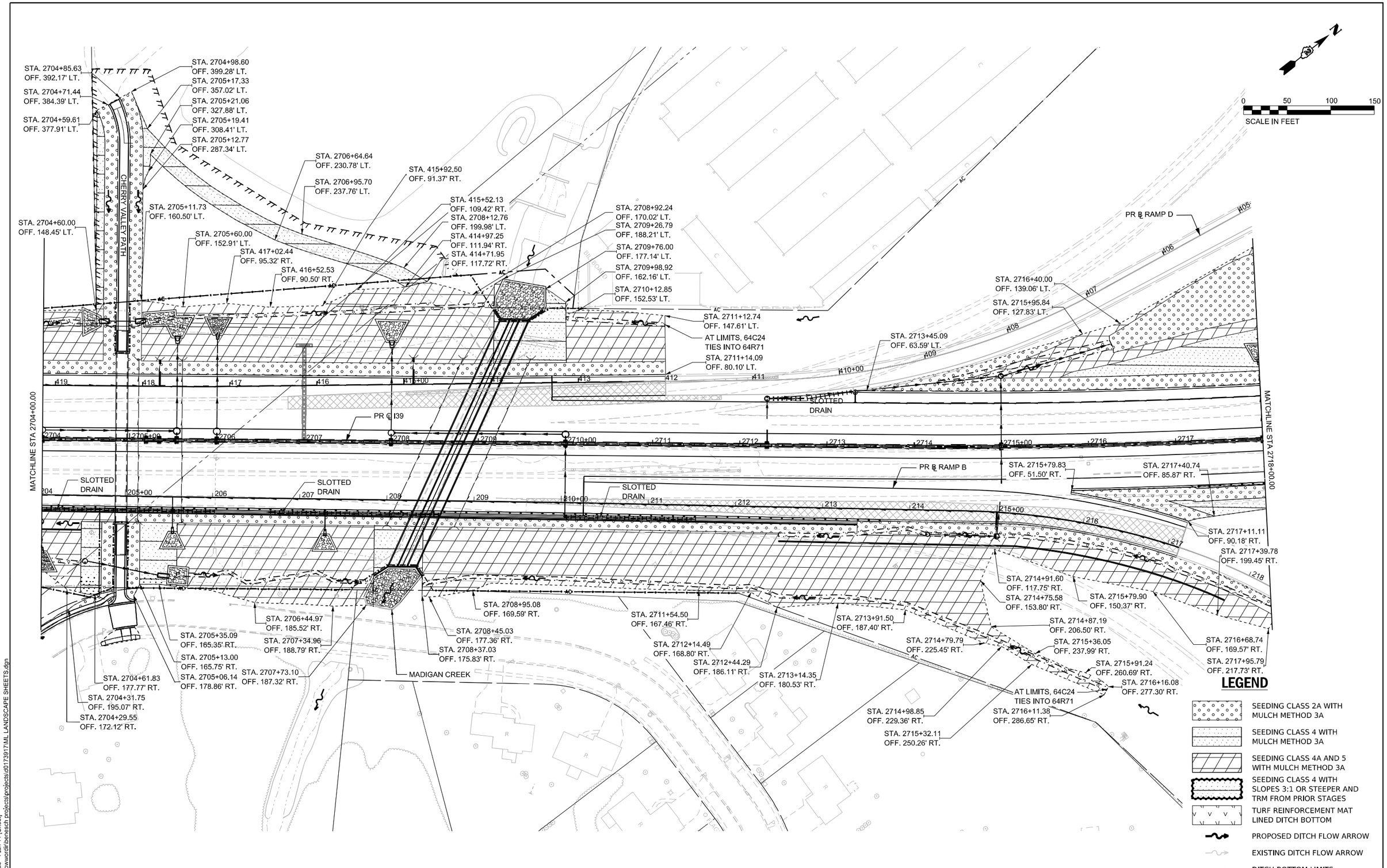

MODEL: I39 Wide - Plan 11 [Sheet]
FILE NAME: c:\pwworkdir\benesch projects\projects\d0173917\ML LANDSCAPE SHEETS.dgn

Kaskaskia Engineering Group, LLC
208 E. Main St., Suite 102
Belleville, Illinois 62220
618.233.3877 phone
618.233.3977 fax
www.kaskaskiaeng.com
PROFESSIONAL REGISTRATIONS: Illinois Professional Design Firm; Professional Engineering Group
LICENSE NO.: 184.001011; 20-5300586

USER NAME = sshuler	DESIGNED - RJB	REVISED -	
	DRAWN - SRS	REVISED -	
PLOT SCALE = $SCALE$	CHECKED - RJB	REVISED -	
PLOT DATE = 2/10/2025	DATE - 02/14/2025	REVISED -	

STATE OF ILLINOIS
DEPARTMENT OF TRANSPORTATION

LANDSCAPING PLAN
I-39/ US 20

SCALE: 1"=50' | SHEET 9 OF 18 SHEETS | STA. 2704+00.00 TO STA. 2718+00.00

F.A.I RTE.	SECTION	COUNTY	TOTAL SHEETS	SHEET NO.
*	(201-3)R & (4-1.5)R	WINNEBAGO	1685	476
		CONTRACT NO. 64C24		
	ILLINOIS	FED. AID PROJECT		

* FAI ROUTE 39 (I-39) & FAP 301 (US 20) *

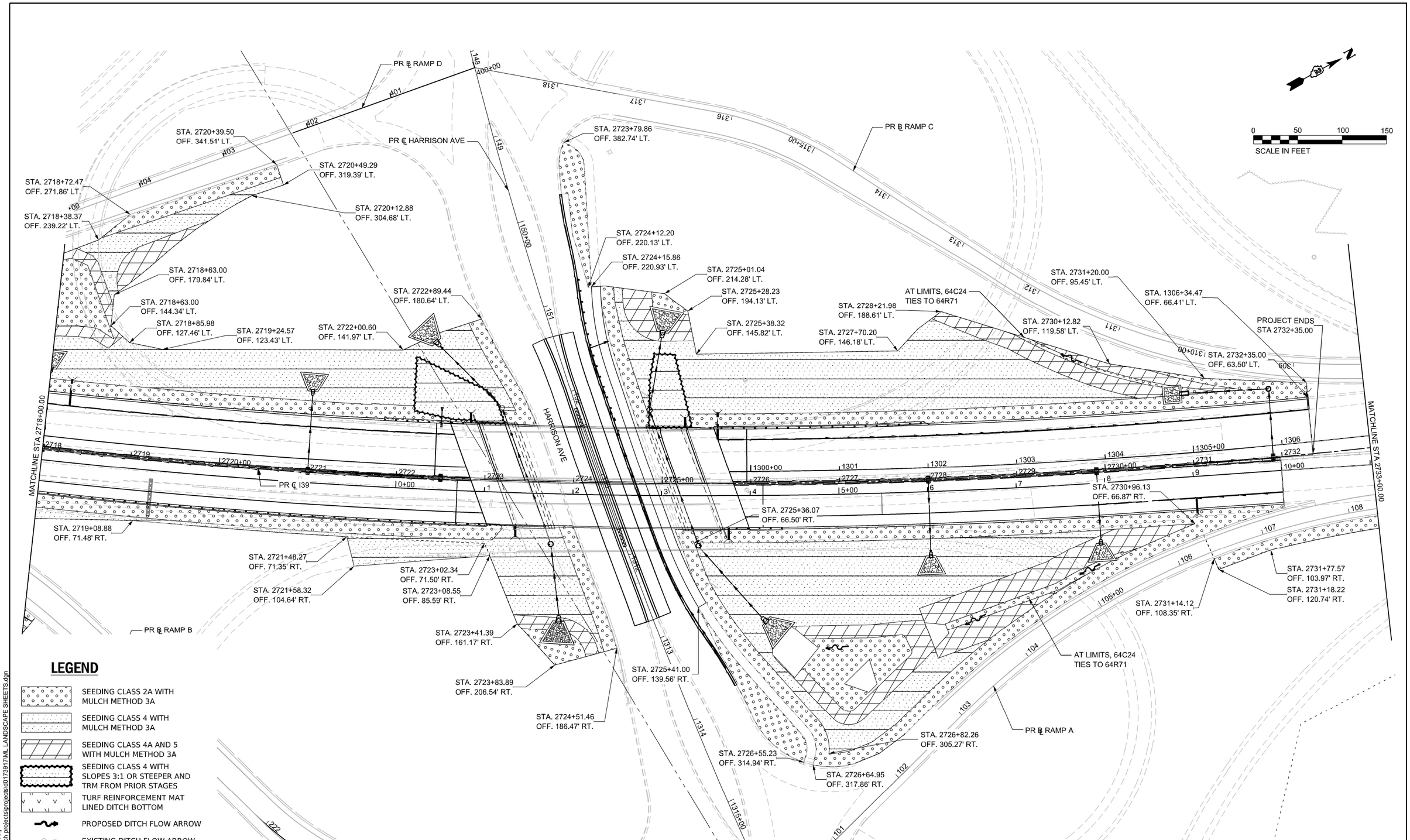

LEGEND

- SEEDING CLASS 2A WITH MULCH METHOD 3A
- SEEDING CLASS 4 WITH MULCH METHOD 3A
- SEEDING CLASS 4A AND 5 WITH MULCH METHOD 3A
- SEEDING CLASS 4 WITH SLOPES 3:1 OR STEEPER AND TRM FROM PRIOR STAGES
- TURF REINFORCEMENT MAT LINED DITCH BOTTOM
- PROPOSED DITCH FLOW ARROW
- EXISTING DITCH FLOW ARROW
- DITCH BOTTOM LIMITS

MODEL: I39 Wide - Plan 12 [Sheet]
FILE NAME: c:\pwworkdir\benesch projects\projects\d0173917\ML LANDSCAPE SHEETS.dgn

Kaskaskia Engineering Group, LLC
PROFESSIONAL REGISTRATIONS
Illinois Professional Design Firm: 184.001951
Professional Engineering Group: 20-5000595
LICENSE INFO
200 E. Main St., Suite 320
Mt. Vernon, Illinois 62864
618.233.8677 phone
618.233.3977 fax
www.kaskaskiaeng.com

USER NAME = bfernandez	DESIGNED - RJB	REVISED -	STATE OF ILLINOIS DEPARTMENT OF TRANSPORTATION	LANDSCAPING PLAN I-39/ US 20	
	DRAWN - SRS	REVISED -			
PLOT SCALE = $SCALE$	CHECKED - RJB	REVISED -			
PLOT DATE = 2/7/2025	DATE - 02/14/2025	REVISED -		SCALE: 1"=50' SHEET 10 OF 18 SHEETS STA. 2718+00.00 TO STA. 2733+00.00	

F.A.I RTE.	SECTION	COUNTY	TOTAL SHEETS	SHEET NO.
*	(201-3)R & (4-1.5)R	WINNEBAGO	1685	477
		CONTRACT NO. 64C24		
		ILLINOIS	FED. AID PROJECT	

* FAI ROUTE 39 (I-39) & FAP 301 (US 20)

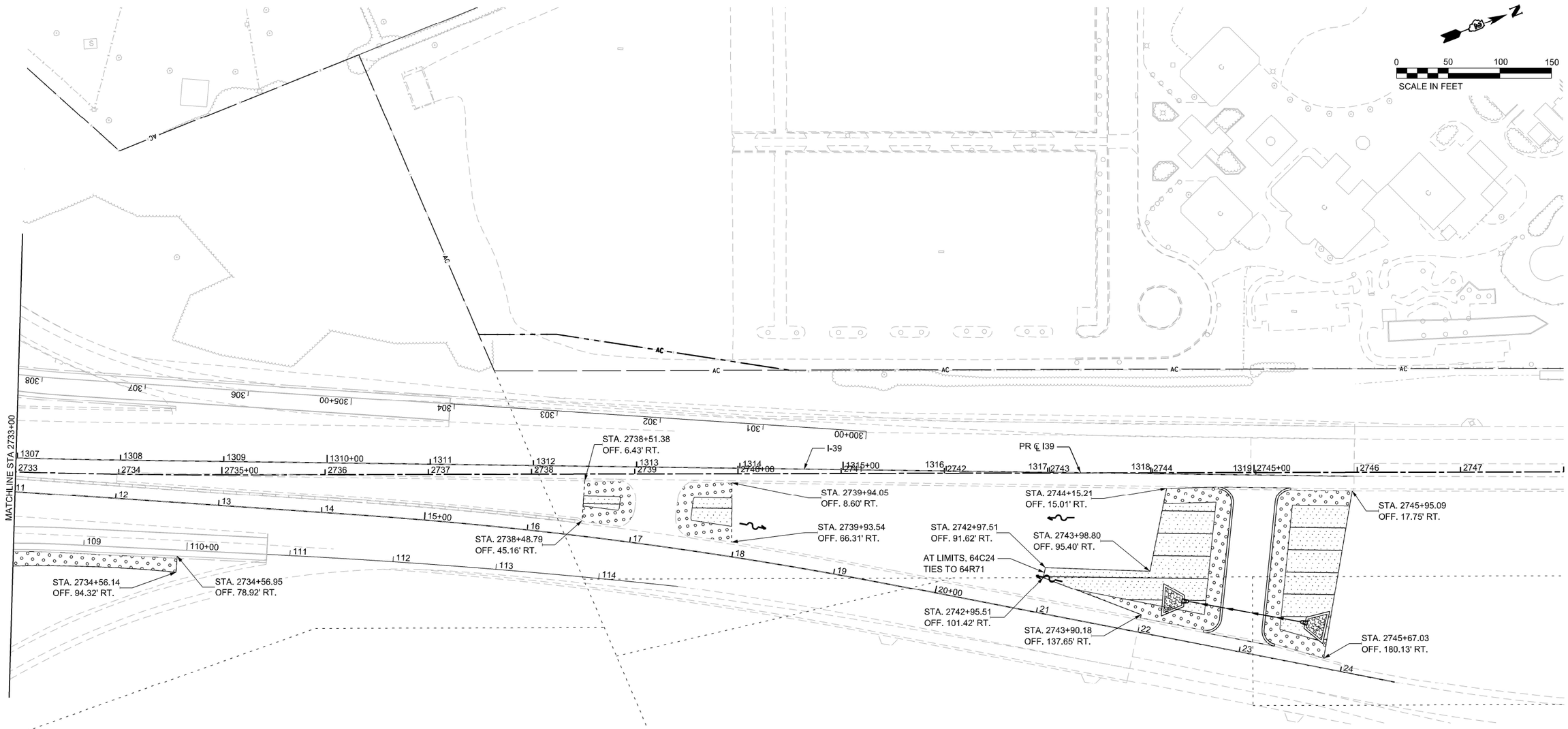

LEGEND

- SEEDING CLASS 2A WITH MULCH METHOD 3A
- SEEDING CLASS 4 WITH MULCH METHOD 3A
- SEEDING CLASS 4A AND 5 WITH MULCH METHOD 3A
- SEEDING CLASS 4 WITH SLOPES 3:1 OR STEEPER AND TRM FROM PRIOR STAGES
- TURF REINFORCEMENT MAT LINED DITCH BOTTOM
- PROPOSED DITCH FLOW ARROW
- EXISTING DITCH FLOW ARROW
- DITCH BOTTOM LIMITS

MODEL: I39 Wide - Plan 13 [Sheet]
FILE NAME: c:\pwworkl\benesch projects\projects\d173917\ML LANDSCAPE SHEETS.dgn

Kaskaskia Engineering Group, LLC
PROFESSIONAL REGISTRATIONS: Illinois Professional Design Firm 184.001771; Professional Engineering Group 20-5000586
LICENSE NO.
200 E. Main St., Suite 300, Belleville, Illinois 62220; 618.233.5077 phone; 618.233.5075 fax; www.kaskaskiaeng.com

USER NAME = agibson	DESIGNED - RJB	REVISED -	
	DRAWN - SRS	REVISED -	
PLOT SCALE = $SCALE$	CHECKED - RJB	REVISED -	
PLOT DATE = 2/6/2025	DATE - 02/14/2025	REVISED -	

STATE OF ILLINOIS
DEPARTMENT OF TRANSPORTATION

LANDSCAPING PLAN
I-39/US 20

SCALE: 1"=50' | SHEET OF 18 SHEETS | STA. 2733+00.00 TO STA. 2748+00.00

F.A.I RTE.	SECTION	COUNTY	TOTAL SHEETS	SHEET NO.
*	(201-3)R & (4-1,5)R	WINNEBAGO	1685	478
		CONTRACT NO. 64C24		
	ILLINOIS	FED. AID PROJECT		

* FAI ROUTE 39 (I-39) & FAP 301 (US 20)

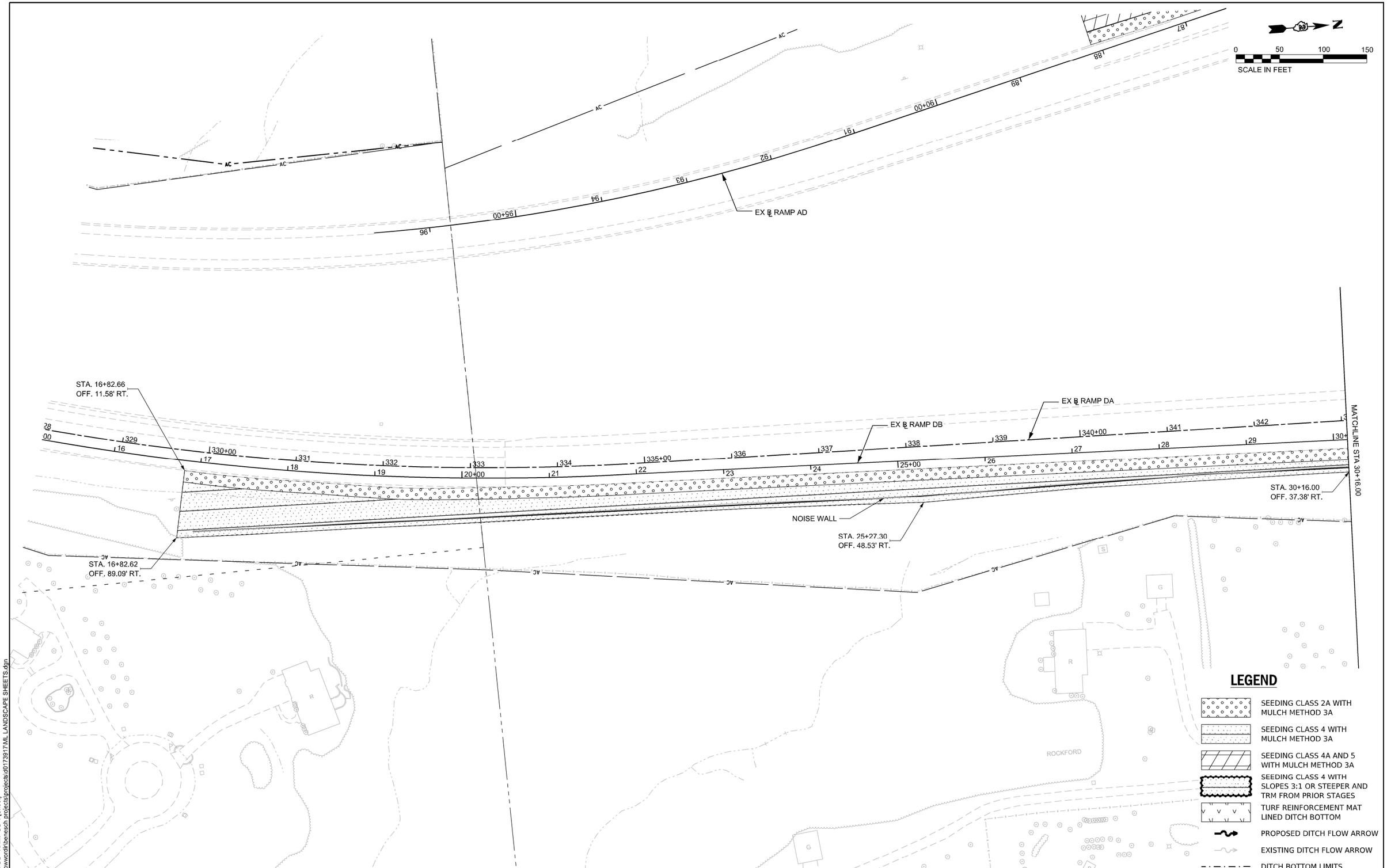

MODEL: PRAM/PDB - RAMP DB-1 [Sheet]
FILE NAME: c:\pwworkl\benesch projects\projects\d0173917\ML LANDSCAPE SHEETS.dgn

Kaskaskia Engineering Group, LLC
PROFESSIONAL REGISTRATIONS: Illinois Professional Design Firm 184.001793; Professional Engineering Group LICENSE NO. 20-5000595
200 E. Main St., Suite 100 Belleville, Illinois 62220 618.233.3877 phone 618.233.3977 fax www.kaskaskiaeng.com

USER NAME = agibson	DESIGNED - RJB	REVISED -	
	DRAWN - SRS	REVISED -	
PLOT SCALE = $SCALE$	CHECKED - RJB	REVISED -	
PLOT DATE = 2/6/2025	DATE - 02/14/2025	REVISED -	

STATE OF ILLINOIS
DEPARTMENT OF TRANSPORTATION

LANDSCAPING PLAN
I-39/ US 20

SCALE: 1"=50' | SHEET 11 OF 18 SHEETS | STA. 15+16.000 TO STA. 30+16.000

F.A.I RTE.	SECTION	COUNTY	TOTAL SHEETS	SHEET NO.
*	(201-3)R & (4-1,5)R	WINNEBAGO	1685	479
		CONTRACT NO. 64C24		
	ILLINOIS	FED. AID PROJECT		

* FAI ROUTE 39 (I-39) & FAP 301 (US 20)

LEGEND

- SEEDING CLASS 2A WITH MULCH METHOD 3A
- SEEDING CLASS 4 WITH MULCH METHOD 3A
- SEEDING CLASS 4A AND 5 WITH MULCH METHOD 3A
- SEEDING CLASS 4 WITH SLOPES 3:1 OR STEEPER AND TRM FROM PRIOR STAGES
- TURF REINFORCEMENT MAT LINED DITCH BOTTOM
- PROPOSED DITCH FLOW ARROW
- EXISTING DITCH FLOW ARROW
- DITCH BOTTOM LIMITS

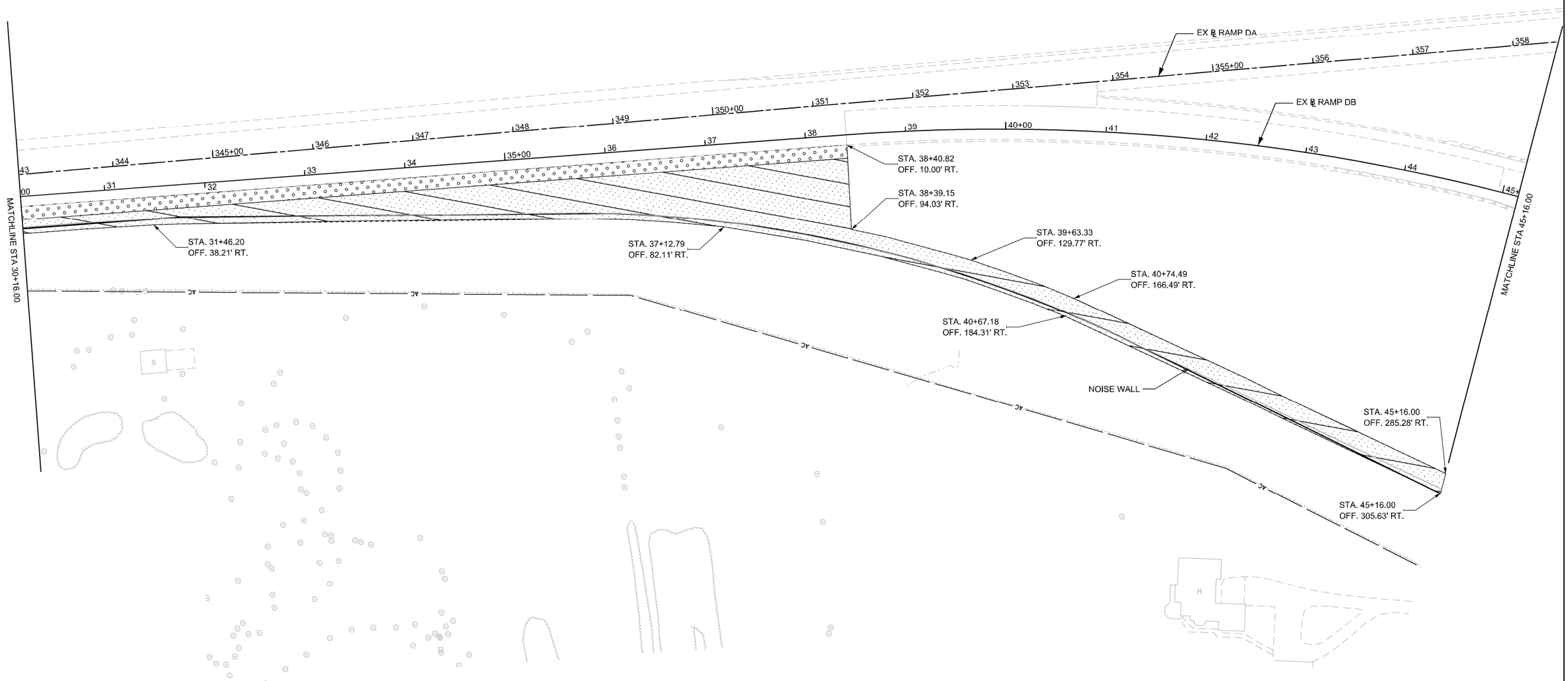

MODEL: PRAMPDE - RAMP DB-2 [Sheet]
FILE NAME: c:\pwworkl\benesch projects\projects\d173917ML LANDSCAPE SHEETS.dgn

Kaskaskia Engineering Group, LLC
PROFESSIONAL REGISTRATIONS: Illinois Professional Design Firm; Professional Engineering Group
LICENSE NO.: 184.001773; 20-5000595

USER NAME = bfernandez	DESIGNED - RJB	REVISED -	
	DRAWN - SRS	REVISED -	
PLOT SCALE = $SCALE$	CHECKED - RJB	REVISED -	
PLOT DATE = 2/7/2025	DATE - 02/14/2025	REVISED -	

STATE OF ILLINOIS
DEPARTMENT OF TRANSPORTATION

LANDSCAPING PLAN
I-39/ US 20

SCALE: 1"=50' | SHEET 12 OF 18 SHEETS | STA. 30+16.000 TO STA. 45+16.000

F.A.I RTE.	SECTION	COUNTY	TOTAL SHEETS	SHEET NO.
*	(201-3)R & (4-1.5)R	WINNEBAGO	1685	480

CONTRACT NO. 64C24

ILLINOIS | FED. AID PROJECT

* FAI ROUTE 39 (I-39) & FAP 301 (US 20)

EX ℄ RAMP DA

EX ℄ LINDEN ROAD

EX ℄ RAMP DB

MATCHLINE STA 45+16.00

MATCHLINE STA 60+16.00

0 50 100 150
SCALE IN FEET

STA. 45+98.55
OFF. 296.97' RT.

STA. 45+16.00
OFF. 285.28' RT.

STA. 45+16.00
OFF. 305.63' RT.

NOISE WALL

STA. 48+69.17
OFF. 288.12' RT.

STA. 48+03.48
OFF. 321.32' RT.

STA. 48+19.40
OFF. 342.49' RT.

STA. 48+69.03
OFF. 406.78' RT.

STA. 49+57.32
OFF. 314.47' RT.

STA. 50+08.95
OFF. 283.38' RT.

STA. 50+05.71
OFF. 397.21' RT.

STA. 51+17.42
OFF. 302.61' RT.

STA. 51+23.98
OFF. 322.14' RT.

NOISE WALL

STA. 57+68.62
OFF. 152.86' RT.

STA. 57+75.88
OFF. 171.71' RT.

STA. 58+73.41
OFF. 122.07' RT.

STA. 58+78.52
OFF. 141.50' RT.

STA. 60+16.00
OFF. 92.60' RT.

STA. 60+16.00
OFF. 112.98' RT.

LEGEND

- SEEDING CLASS 2A WITH MULCH METHOD 3A
- SEEDING CLASS 4 WITH MULCH METHOD 3A
- SEEDING CLASS 4A AND 5 WITH MULCH METHOD 3A
- SEEDING CLASS 4 WITH SLOPES 3:1 OR STEEPER AND TRM FROM PRIOR STAGES
- TURF REINFORCEMENT MAT LINED DITCH BOTTOM
- PROPOSED DITCH FLOW ARROW
- EXISTING DITCH FLOW ARROW
- DITCH BOTTOM LIMITS

MODEL: PRAMPDB - RAMP DB-3 [Sheet]
FILE NAME: c:\pwworkir\benesch projects\projects\d0172917\ML LANDSCAPE SHEETS.dgn

Kaskaskia Engineering Group, LLC
PROFESSIONAL REGISTRATIONS: Illinois Professional Design Firm; Professional Engineering Group
LICENSE NO.: 184.001793; 20-5000585

USER NAME = bfernandez	DESIGNED - RJB	REVISED -	
	DRAWN - SRS	REVISED -	
PLOT SCALE = $SCALE$	CHECKED - RJB	REVISED -	
PLOT DATE = 2/7/2025	DATE - 02/14/2025	REVISED -	

STATE OF ILLINOIS
DEPARTMENT OF TRANSPORTATION

LANDSCAPING PLAN
I-39/ US 20

SCALE: 1"=50' | SHEET 13 OF 18 SHEETS | STA. 45+16.000 TO STA. 60+16.000

F.A.I RTE.	SECTION	COUNTY	TOTAL SHEETS	SHEET NO.
*	(201-3)R & (4-1,5)R	WINNEBAGO	1685	481
		CONTRACT NO. 64C24		
	ILLINOIS	FED. AID PROJECT		

* FAI ROUTE 39 (I-39) & FAP 301 (US 20)

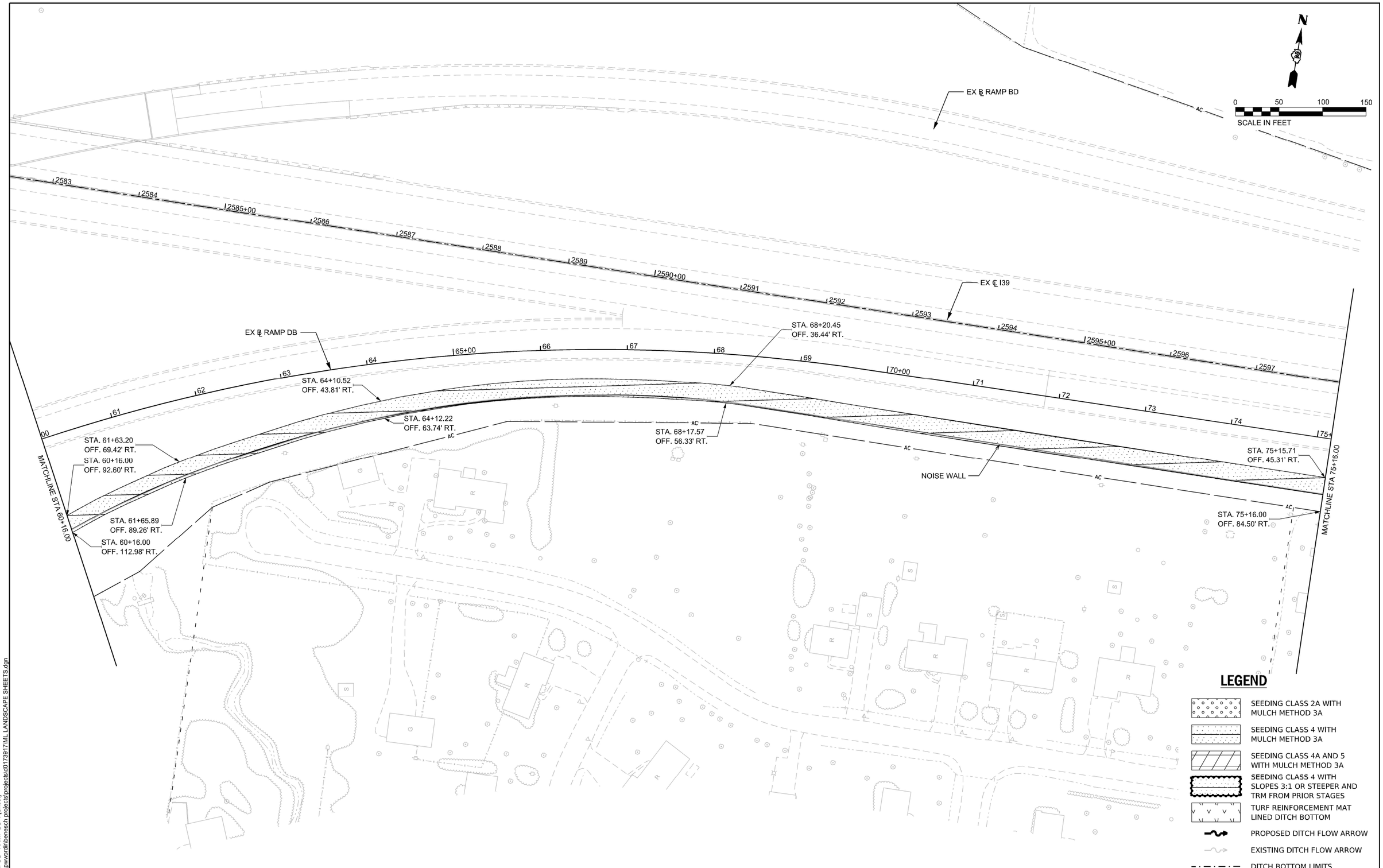

MODEL: PRAMPDB - RAMP DB-4 [Sheet]
FILE NAME: c:\pwworkdir\benesch projects\projects\d0173917\ML LANDSCAPE SHEETS.dgn

Kaskaskia Engineering Group, LLC
PROFESSIONAL REGISTRATIONS: Illinois Professional Design Firm: Professional Engineering Group
LICENSE NO: 184.001773 20-5000505
200 E. Main St., Suite 300, Belleville, Illinois 62220
618.233.5877 phone
618.233.5879 fax
www.kaskaskiaeng.com

USER NAME = bfernandez	DESIGNED - RJB	REVISED -	
	DRAWN - SRS	REVISED -	
PLOT SCALE = $SCALE$	CHECKED - RJB	REVISED -	
PLOT DATE = 2/7/2025	DATE - 02/14/2025	REVISED -	

STATE OF ILLINOIS
DEPARTMENT OF TRANSPORTATION

LANDSCAPING PLAN
I-39/ US 20

SCALE: 1"=50' | SHEET 14 OF 18 SHEETS | STA. 60+16.000 TO STA. 75+16.000

F.A.I RTE.	SECTION	COUNTY	TOTAL SHEETS	SHEET NO.
*	(201-3)R & (4-1,5)R	WINNEBAGO	1685	482
		CONTRACT NO. 64C24		
		ILLINOIS	FED. AID PROJECT	

* FAI ROUTE 39 (I-39) & FAP 301 (US 20)

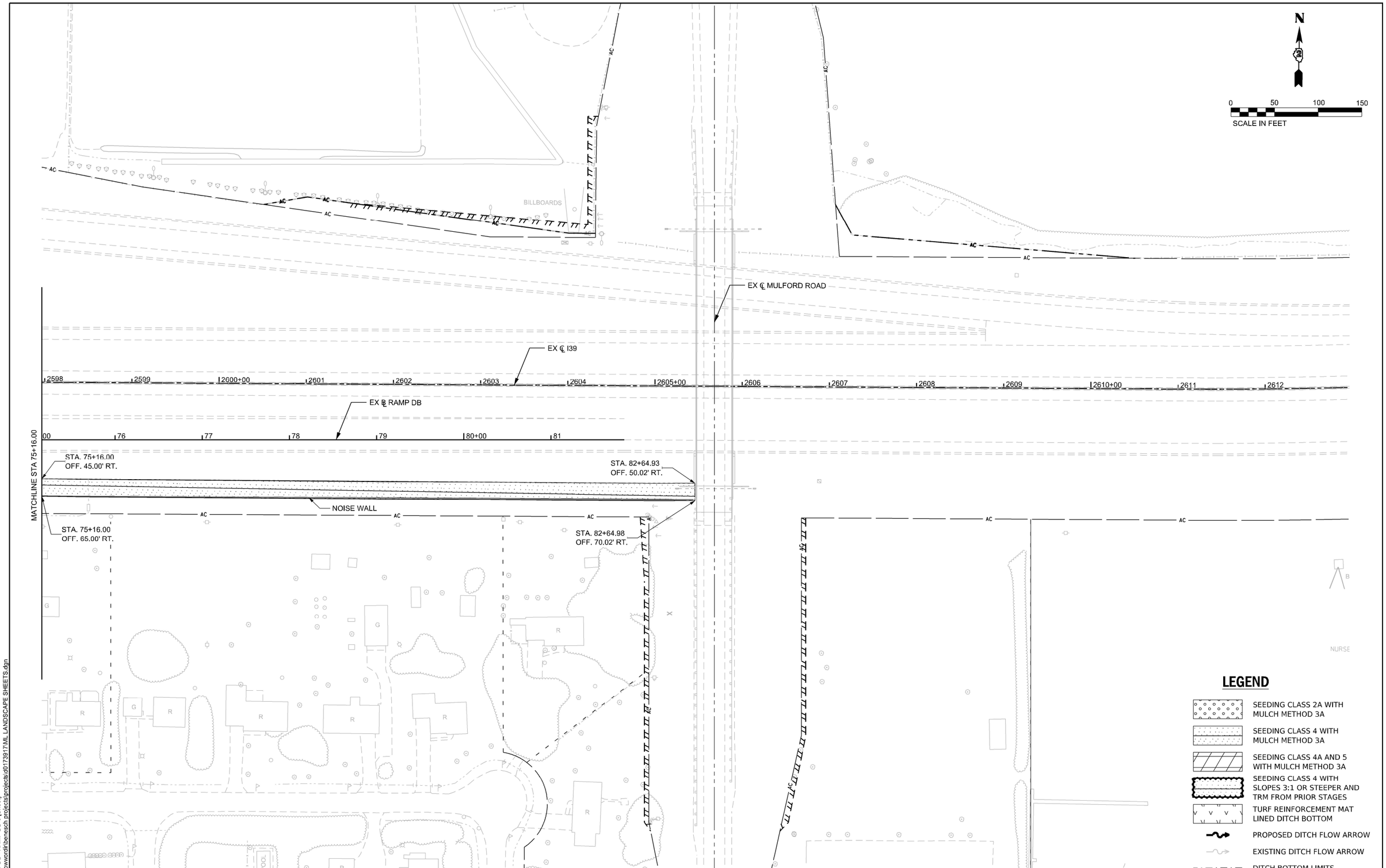

MODEL: PRAMPDB - RAMP DB-5 [Sheet]
FILE NAME: c:\pwworking\benesch projects\projects\d0173917\ML LANDSCAPE SHEETS.dgn

Kaskaskia Engineering Group, LLC
PROFESSIONAL DESIGN FIRM
Illinois Professional Design Firm 184.001971
Professional Engineering Group 20-5000501
200 E. Main St., Suite 300
Belleville, Illinois 62220
618.233.8477 phone
618.233.3977 fax
www.kaskaskiaeng.com
CORPORATE SEAL

USER NAME = bfernandez	DESIGNED - RJB	REVISED -	
	DRAWN - SRS	REVISED -	
PLOT SCALE = $SCALE$	CHECKED - RJB	REVISED -	
PLOT DATE = 2/7/2025	DATE - 02/14/2025	REVISED -	

STATE OF ILLINOIS
DEPARTMENT OF TRANSPORTATION

LANDSCAPING PLAN
I-39/ US 20

SCALE: 1"=50' | SHEET 15 OF 18 SHEETS | STA. 75+16.000 TO STA. 90+16.000

F.A.I RTE.	SECTION	COUNTY	TOTAL SHEETS	SHEET NO.
*	(201-3)R & (4-1.5)R	WINNEBAGO	1685	483
		CONTRACT NO. 64C24		
		ILLINOIS	FED. AID PROJECT	

* FAI ROUTE 39 (I-39) & FAP 301 (US 20)

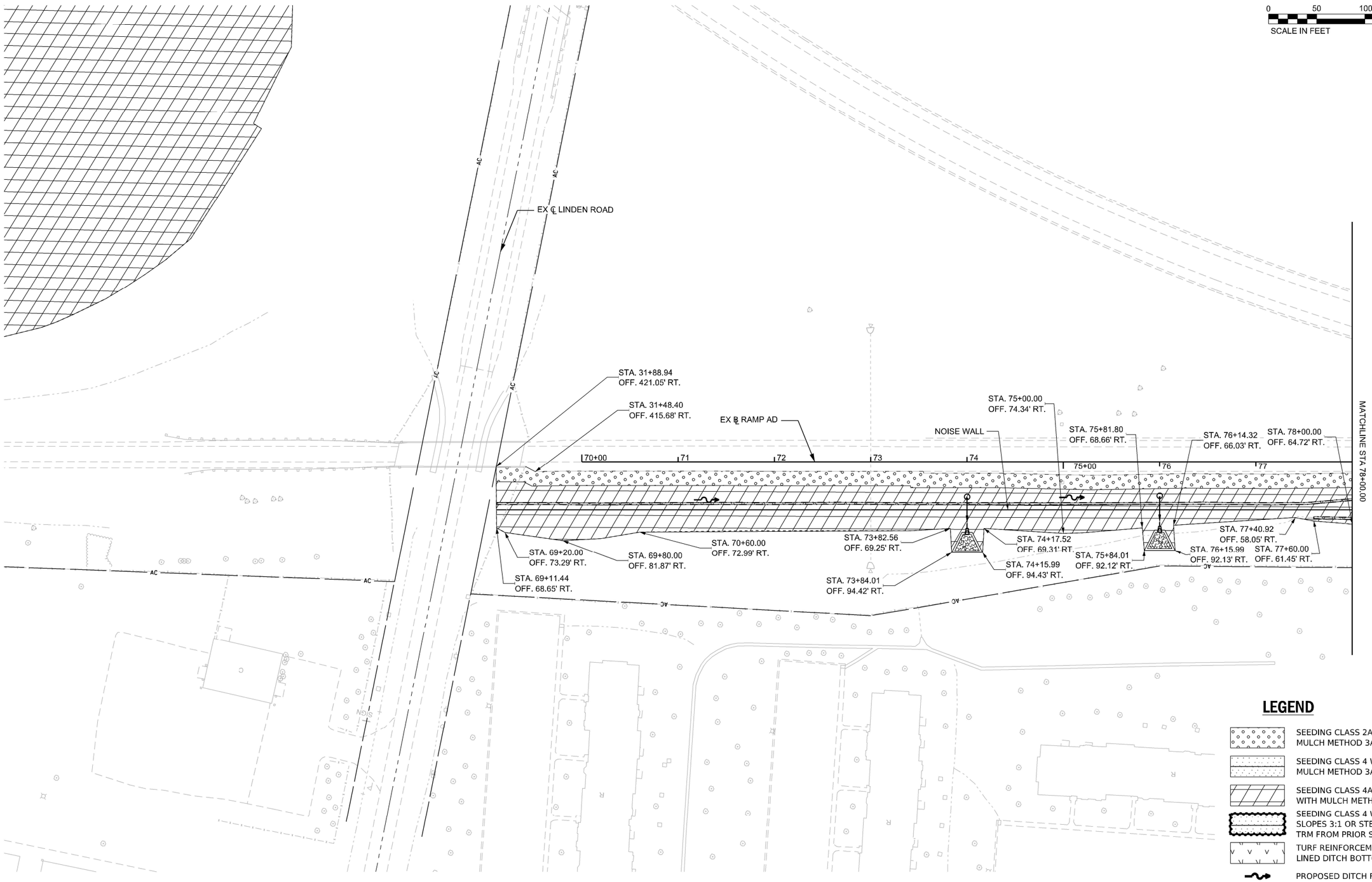

LEGEND

- SEEDING CLASS 2A WITH MULCH METHOD 3A
- SEEDING CLASS 4 WITH MULCH METHOD 3A
- SEEDING CLASS 4A AND 5 WITH MULCH METHOD 3A
- SEEDING CLASS 4 WITH SLOPES 3:1 OR STEEPER AND TRM FROM PRIOR STAGES
- TURF REINFORCEMENT MAT LINED DITCH BOTTOM
- PROPOSED DITCH FLOW ARROW
- EXISTING DITCH FLOW ARROW
- DITCH BOTTOM LIMITS

MODEL: Unnamed Plan - RAMP DA [Sheet]
FILE NAME: c:\pwworking\benesch projects\projects\d0173917\ML LANDSCAPE SHEETS.dgn

Kaskaskia Engineering Group, LLC
PROFESSIONAL REGISTRATION
Illinois Professional Design Firm: 184.004793
Professional Engineering Group: 20-5500501

USER NAME = agibson	DESIGNED - RJB	REVISED -	
	DRAWN - SRS	REVISED -	
PLOT SCALE = $SCALE$	CHECKED - RJB	REVISED -	
PLOT DATE = 2/6/2025	DATE - 02/14/2025	REVISED -	

STATE OF ILLINOIS
DEPARTMENT OF TRANSPORTATION

LANDSCAPING PLAN
I-39/ US 20

SCALE: 1"=50' | SHEET 16 OF 18 SHEETS | STA. 0+00.00 TO STA. 37+00.00

F.A.I RTE.	SECTION	COUNTY	TOTAL SHEETS	SHEET NO.
*	(201-3)R & (4-1.5)R	WINNEBAGO	1685	484

CONTRACT NO. 64C24

ILLINOIS | FED. AID PROJECT

* FAI ROUTE 39 (I-39) & FAP 301 (US 20)

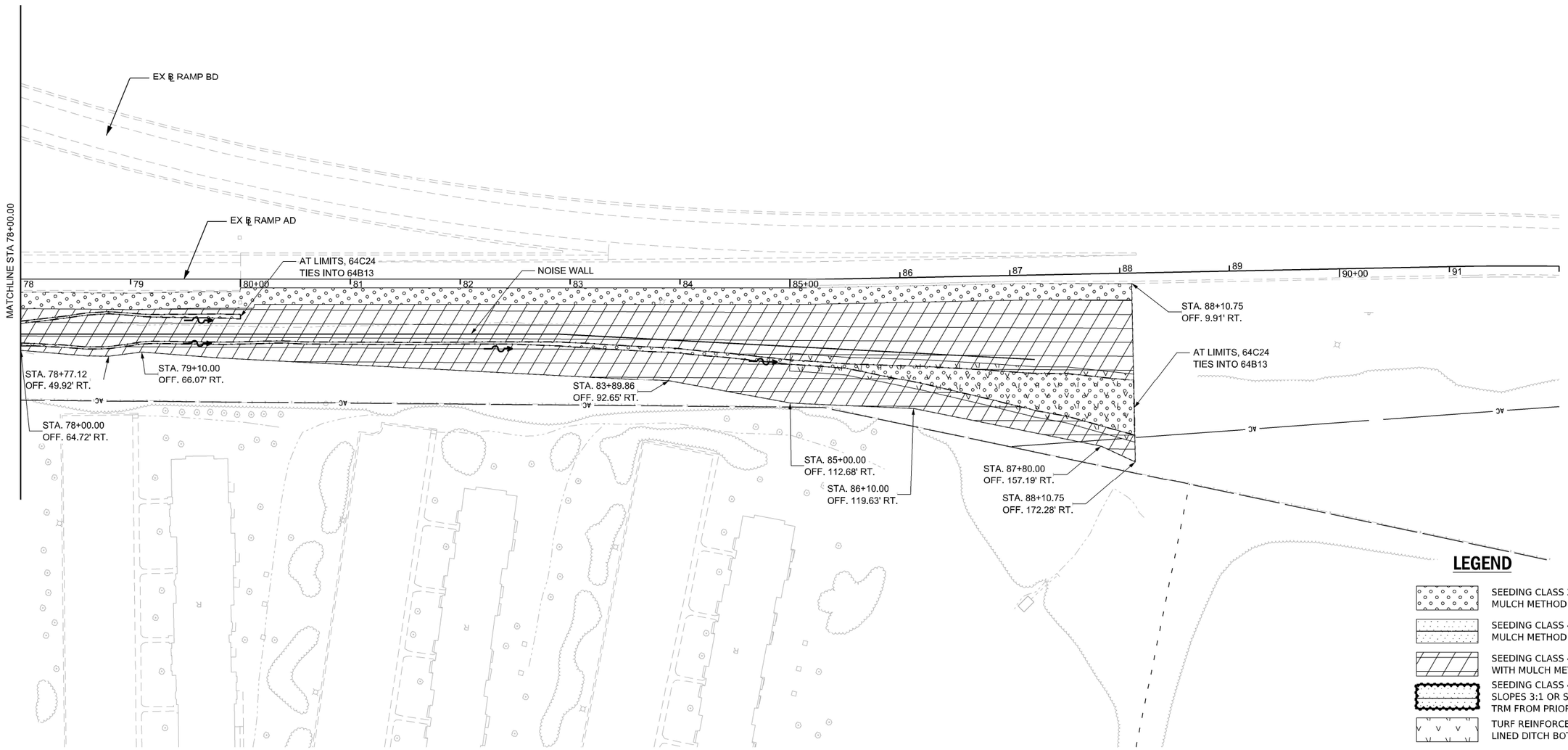

MODEL: Unnamed Plan-1 - RAMP DA-1 [Sheet]
FILE NAME: c:\pwworkdir\benesch projects\projects\d0173917\ML LANDSCAPE SHEETS.dgn

Kaskaskia Engineering Group, LLC
PROFESSIONAL REGISTRATIONS: Illinois Professional Design Firm: Professional Engineering Group
LICENSE NO.: 184.001775
20: 5000585

USER NAME = bfernandez	DESIGNED - RJB	REVISED -	
	DRAWN - SRS	REVISED -	
PLOT SCALE = $SCALE$	CHECKED - RJB	REVISED -	
PLOT DATE = 2/7/2025	DATE - 02/14/2025	REVISED -	

STATE OF ILLINOIS
DEPARTMENT OF TRANSPORTATION

LANDSCAPING PLAN
I-39/ US 20

SCALE: 1"=50' | SHEET 17 OF 18 SHEETS | STA. 0+00.00 TO STA. 37+00.00

F.A.I RTE.	SECTION	COUNTY	TOTAL SHEETS	SHEET NO.
*	(201-3)R & (4-1,5)R	WINNEBAGO	1685	485
		CONTRACT NO. 64C24		
		ILLINOIS	FED. AID PROJECT	

* FAI ROUTE 39 (I-39) & FAP 301 (US 20)

ESTIMATED PROJECT LIGHTING QUANTITIES

-	-	-	-
81028370	UNDERGROUND CONDUIT, PVC, 3" DIA	FOOT	92
81100300	CONDUIT ATTACHED TO STRUCTURE, 1" DIA., GALVANIZED STEEL	FOOT	1,195
81104580	CONDUIT ATTACHED TO STRUCTURE, 2" DIA., STAINLESS STEEL	FOOT	150
81200230	CONDUIT EMBEDDED IN STRUCTURE, 2" DIA, PVC	FOOT	11,052
81300220	JUNCTION BOX, STAINLESS STEEL, ATTACHED TO STRUCTURE, 6"x6"x4"	EACH	21
81300530	JUNCTION BOX, STAINLESS STEEL, ATTACHED TO STRUCTURE, 12"x10"x6"	EACH	1
81300610	JUNCTION BOX, STAINLESS STEEL, ATTACHED TO STRUCTURE, 14"x12"x6"	EACH	5
81300986	JUNCTION BOX, STAINLESS STEEL, EMBEDDED IN STRUCTURE, 8"x24"x10"	EACH	2
81603096	UNIT DUCT, 600V, 4-1/C NO.8, 1/C NO. 8 GROUND, 1 1/4" DIA POLYETHYLENE	FOOT	30
81603100	UNIT DUCT, 600V, 4-1/C NO.6, 1/C NO. 6 GROUND, 1 1/4" DIA POLYETHYLENE	FOOT	1,225
81702110	ELECTRIC CABLE IN CONDUIT, 600V 1/C NO. 10	FOOT	4,333
81702120	ELECTRIC CABLE IN CONDUIT, 600V 1/C NO. 8	FOOT	100
81702130	ELECTRIC CABLE IN CONDUIT, 600V 1/C NO. 6	FOOT	51,398
81800230	AERIAL CABLE, 2-1/C NO.6 WITH MESSENGER WIRE	FOOT	800
82110008	LUMINAIRE, LED, ROADWAY, OUTPUT DESIGNATION H	EACH	108
82110022	LUMINAIRE, LED, UNDERPASS, WALLMOUNT, OUTPUT DESIGNATION E	EACH	17
82110027	LUMINAIRE, LED, UNDERPASS, SUSPENDED, OUTPUT DESIGNATION E	EACH	2
83003550	LIGHT POLE, ALUMINIUM, 45FT M.H., 12FT. DAVIT ARM-TWIN	EACH	52
83600300	LIGHT POLE, FOUNDATION, 30" DIAMETER	FOOT	234
X8000003	MAINTENANCE OF LIGHTING SYSTEM	CAL MO	36
X8302151	TEMPORARY WOOD POLE, 50 FT, CLASS 4	EACH	4

ESTIMATED PROJECT CHERRY VALLEY PATH LIGHTING QUANTITIES

-	-	-	-
81028370	UNDERGROUND CONDUIT, PVC, 3" DIA	FOOT	12
81100453	CONDUIT ATTACHED TO STRUCTURE, 3/4" DIA., STAINLESS STEEL	FOOT	440
81104580	CONDUIT ATTACHED TO STRUCTURE, 2" DIA., STAINLESS STEEL	FOOT	20
81300220	JUNCTION BOX, STAINLESS STEEL, ATTACHED TO STRUCTURE, 6"x6"x4"	EACH	47
81300530	JUNCTION BOX, STAINLESS STEEL, ATTACHED TO STRUCTURE, 12"x10"x6"	EACH	1
81603096	UNIT DUCT, 600V, 4-1/C NO.8, 1/C NO.8, GROUND, (XLP-TYPE USE), 1 1/4" DIA POLYETHYLENE	FOOT	380
81702110	ELECTRIC CABLE IN CONDUIT, 600V (XLP-TYPE USE) 1/C NO.10	FOOT	2160
81702120	ELECTRIC CABLE IN CONDUIT, 600V (XLP-TYPE USE) 1/C NO.8	EACH	100
82500350	LIGHTING CONTROLLER, BASE MOUNTED, 240 VOLT, 100 AMP	EACH	1
X1400342	UNDERPASS LIGHTING REMOVAL	LSUM	1
X8211000	UNDERPASS LUMINAIRE (SPECIAL)	EACH	46

LIGHTING LEGEND

- EXISITNG TWIN ARM LED STREET LIGHT
- EXISITING LED STREET LIGHT
- EXISTING LIGHTING CONTROLLER (SIZE AS NOTED)
- PROPOSED TWIN ARM LED STREET LIGHT, 45FT. M.H., 12FT. DAVIT ARM MOUNTED ON BARRIER WALL/BRIDGE PARAPET/RETAINING WALL
- PROPOSED JUNCTION BOX, STAINLESS STEEL, TYPE AND SIZE AS NOTED
- UNDERPASS LUMINAIRE, 480V
- UNDERGROUND CONDUIT, SIZE AND TYPE AS INDICATED
- CONDUIT EMBEDDED IN STRUCTURE
- CONDUIT ATTACHED TO STRUCTURE
- LIQUID TIGHT FLEXIBLE NON-METALLIC CONDUIT WITH 2-1/C#10 AND 1-1/C#10 GROUND (USED FOR UNDERPASSES)
- —— L —— UNIT DUCT, SIZE AS NOTED

CONDUIT /CABLE DESCRIPTION

- (A) NOT USED
- (B) CONDUIT EMBEDDED IN STRUCTURE, 2" DIA., PVC WITH ELECTRIC CABLE IN CONDUIT, 600V (XLP-TYPE USE) 2-1/C NO. 6 AND 1/C NO. 6 GROUND
- (C) CONDUIT EMBEDDED IN STRUCTURE, 2" DIA., PVC WITH ELECTRIC CABLE IN CONDUIT, 600V (XLP-TYPE USE) 4-1/C NO. 6 AND 1/C NO. 6 GROUND
- (D) UNDERGROUND CONDUIT, PVC, 3" DIA. (CASING FOR UNIT DUCT)
- (E) CONDUIT ATTACHED TO STRUCTURE, 1" DIA., GALVANIZED STEEL WITH ELECTRIC CABLE IN CONDUIT, 600V (XLP-TYPE USE) 4-1/C NO. 10 AND 1/C NO. 10 GROUND
- (F) CONDUIT ATTACHED TO STRUCTURE, 1" DIA., GALVANIZED STEEL WITH ELECTRIC CABLE IN CONDUIT, 600V (XLP-TYPE USE) 2-1/C NO. 10 AND 1/C NO. 10 GROUND
- (G) UNIT DUCT, 600V, 4-1C NO. 8, 1/C NO. 8 GROUND, (XLP-TYPE USE), 1¼" DIA. POLYETHYLENE
- (H) UNIT DUCT, 600V, 4-1C NO. 6, 1/C NO. 6 GROUND, (XLP-TYPE USE), 1¼" DIA. POLYETHYLENE
- (I) CONDUIT EMBEDDED IN STRUCTURE, 2" DIA, PVC (EMPTY)
- (J) CONDUIT ATTACHED TO STRUCTURE, 2" DIA, STAINLESS STEEL WITH ELECTRIC CABLE IN CONDUIT, 600 (XPL-TYPE USE) 4-1/C NO. 10 AND 1/C N0. 10 GROUND
- (K) CONDUIT ATTACHED TO STRUCTURE, 2" DIA, STAINLESS STEEL WITH ELECTRIC CABLE IN CONDUIT, 600 (XPL-TYPE USE) 4-1/C NO. 6 AND 1/C N0. 6 GROUND
- (L) CONDUIT ATTACHED TO STRUCTURE, 2" DIA, STAINLESS STEEL WITH ELECTRIC CABLE IN CONDUIT, 600 (XPL-TYPE USE) 4-1/C NO. 8 AND 1/C N0. 8 GROUND

-

3-A-01

- POLE NUMBER
- CIRCUIT
- CONTROL CABINET

1. ALL CONDUIT CASINGS FOR CROSSING ROADWAYS SHALL BE 3" PVC SCHEDULE 80, UNLESS OTHERWISE NOTED.
2. THE GROUND CONDUCTOR SHALL HAVE NO SPLICE OR KINKS BELOW GRADE. IT SHALL BE SOLIDLY CONNECTED TO THE GROUNDING LUG OF EACH POLE, JUNCTION BOX, AND TO THE GROUND ROD AT THE SERVICE INSTALLATION. IN AREAS WHERE MULTIPLE CIRCUIT CONDUCTORS SHARE A COMMON CONDUIT, A COMMON EQUIPMENT GROUND SHALL BE UTILIZED.
3. ELECTRICAL EQUIPMENT, RACEWAY, ETC. ARE SHOWN IN APPROXIMATE LOCATIONS ONLY. CONTRACTOR SHALL INSTALL ELECTRICAL EQUIPMENT, RACEWAYS, ETC. WHERE DIRECTED BY THE ENGINEER IN ORDER TO BEST SUIT JOB CONDITIONS.
4. ALL REPLACEMENT AND TEMPORARY WIRING SHALL BE AS PER DESIGN PLANS OR AS APPROVED BY THE ENGINEER.
5. THE CONTRACTOR IS RESPONSIBLE FOR LOCATING ALL EXISTING STATE OWNED LIGHTING AND / OR TRAFFIC SIGNAL UTILITIES WITHIN THE LIMITS OF THE CONTRACT.
6. NO POLES OR HANDHOLES SHALL BE INSTALLED IN THE FLOWLINE OF A DITCH. EQUIPMENT SETBACK TO BE ADJUSTED IF NECESSARY AS DIRECTED BY THE ENGINEER.
7. SEE SHEET 5 OF THE PLANS FOR A LIST OF APPLICABLE HIGHWAY STANDARDS.
8. EXPANSION/DEFLECTION COUPLINGS SHALL BE INSTALLED IN ALL LOCATIONS BETWEEN STRUCTURES, AT EXPANSION JOINTS, AND WHERE NECESSARY TO CONTROL MOVEMENT THAT WOULD DAMAGE THE CONDUIT. THE COST OF EXPANSION/DEFLECTION COUPLINGS SHALL BE INCLUDED IN THE COST OF THE ASSOCIATED CONDUIT AS CALLED OUT ON THE PLANS.
9. ALL GPS COORDINATES AND SKETCH OF THE ELECTRICAL SERVICE AND METER LOCATIONS SHALL BE PROVIDED TO THE RESIDENT. METER NUMBERS SHALL ALSO BE INCLUDED.
10. LIGHTING ITEMS 81800230, 82110008 (4 LUMINAIRES), AND X0327236 HAVE BEEN ADDED TO THE PLANS FOR ILLUMINATING TEMPORARY RAMP D. PLACEMENT OF POLES, LUMINAIRES, AND AERIAL CABLE SHALL BE AS DIRECTED BY THE ENGINEER.
11. THE PAY ITEMS LISTED BELOW ARE TO BE UTILIZED AS DIRECTED BY THE ENGINEER IN THE ILLUMINATION OF THE TEMPORARY RAMP.
    1. TEMPORARY WOOD POLES, 50FT, CLASS 4
    2. AERIAL CABL, 2-1/C NO.6 WITH MESSENGER
    3. LUMINAIRE, LED, ROADWAY, OUTPUT DESIGNATION H (4 NOS)

NOTES:
1. CONDUIT FROM SYSTEM INTERCHANGE WAS CAPPED AND SEALED FOR FUTURE CONNECTIONS. CONTRACTOR TO USE THIS CONDUIT FOR CIRCUIT CONTINUATION.

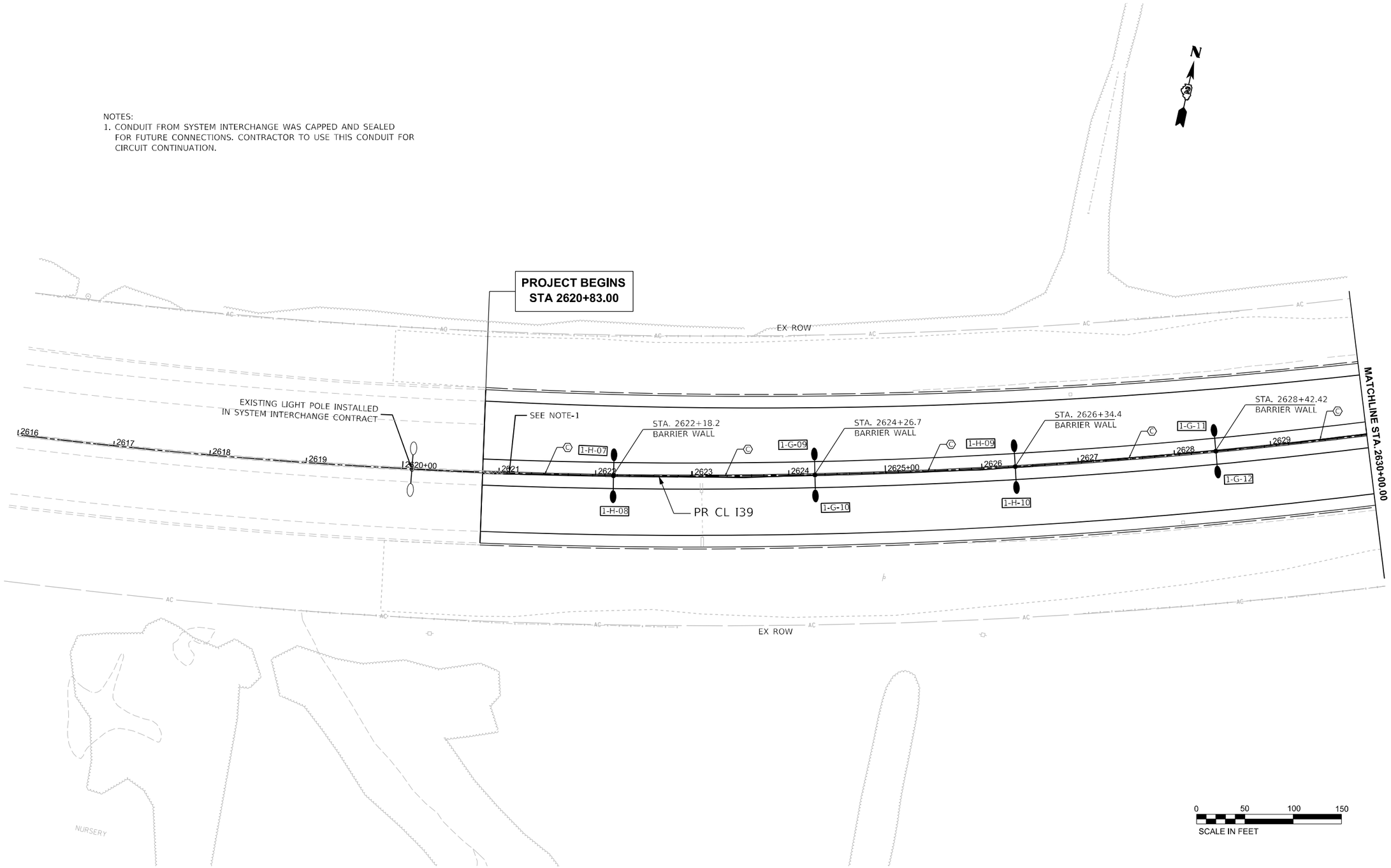

MODEL: I39 Wide - LGT Plan 5 [Sheet]
FILE NAME: c:\pwworkdir\benesch projects\projects\d0173716\D266C42_ML-sht-LGT-I39.dgn

benesch
Alfred Benesch & Company
35 W Wacker Drive, Suite 3200
Chicago, Illinois 60601
312-565-6450 Job No. 10806.00

USER NAME = agibson	DESIGNED - R.SCARIA	REVISED -	
	DRAWN - R.SCARIA	REVISED -	
PLOT SCALE = $SCALE$	CHECKED - G.THIESSE	REVISED -	
PLOT DATE = 2/6/2025	DATE - 02/14/2025	REVISED -	

STATE OF ILLINOIS
DEPARTMENT OF TRANSPORTATION

PROPOSED LIGHTING PLAN
I-39

SCALE: 1"=50' | SHEET 2 OF 21 SHEETS | STA. 2616+00.00 TO STA. 2630+00.00

F.A.I RTE.	SECTION	COUNTY	TOTAL SHEETS	SHEET NO.
*	(201-3)R & (4-1.5)R	WINNEBAGO	1685	487
		CONTRACT NO. 64C24		
	ILLINOIS	FED. AID PROJECT		

* FAI ROUTE 39 (I-39) & FAP 301 (US 20)

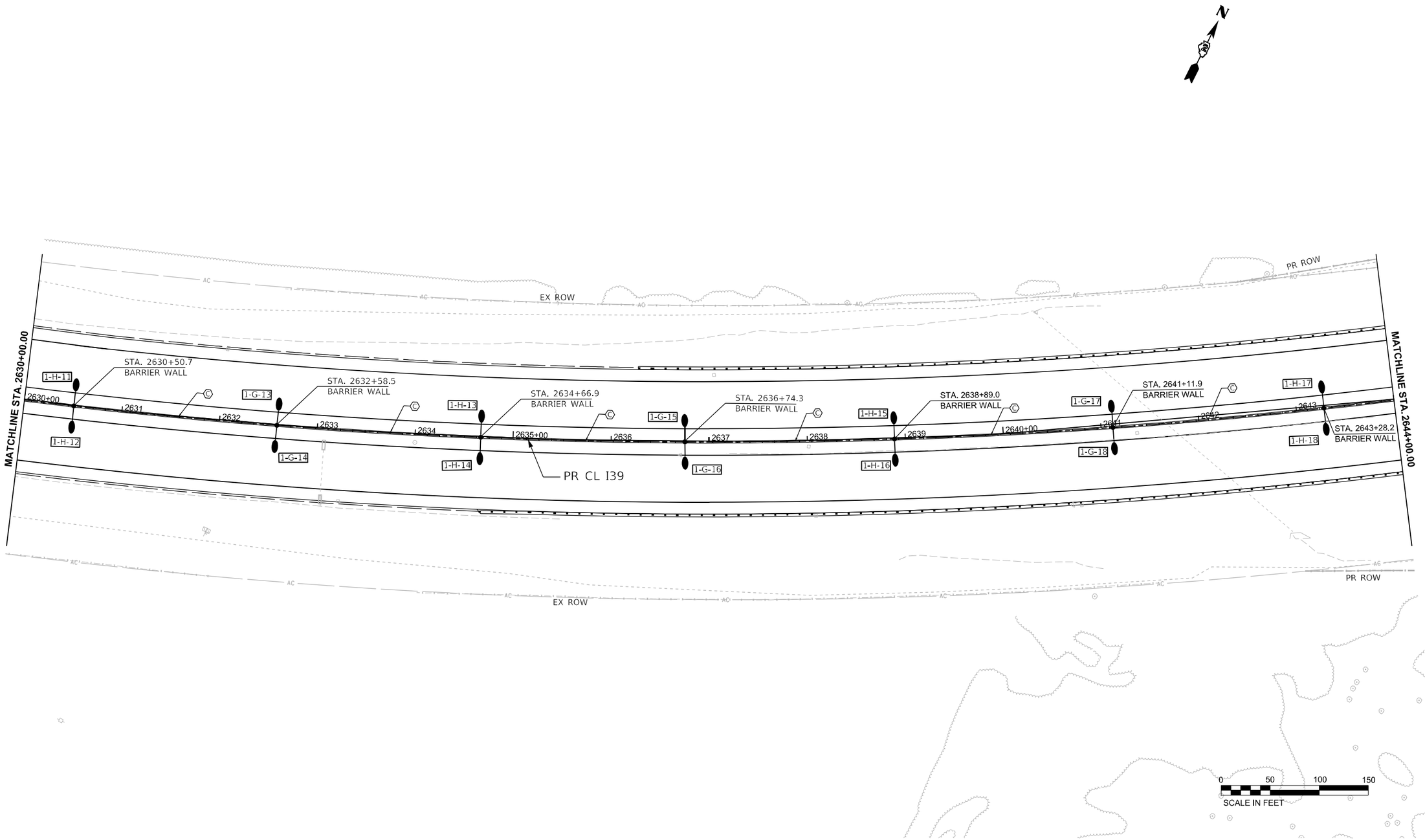

MODEL: I39 Wide - LGT Plan 6 [Sheet]
FILE NAME: c:\pwworkdir\benesch projects\projects\d0173716\D266C42_ML-sth-LGT-I39.dgn

benesch
Alfred Benesch & Company
35 W Wacker Drive, Suite 3200
Chicago, Illinois 60601
312-565-0450 Job No. 10800.00

USER NAME = agibson	DESIGNED - R.SCARIA	REVISED -	
	DRAWN - R.SCARIA	REVISED -	
PLOT SCALE = $SCALE$	CHECKED - G.THIESSE	REVISED -	
PLOT DATE = 2/6/2025	DATE - 02/14/2025	REVISED -	

STATE OF ILLINOIS
DEPARTMENT OF TRANSPORTATION

PROPOSED LIGHTING PLAN
I-39

SCALE: 1"=50' | SHEET 3 OF 21 SHEETS | STA. 2630+00.00 TO STA. 2644+00.00

F.A.I RTE.	SECTION	COUNTY	TOTAL SHEETS	SHEET NO.
*	(201-3)R & (4-1.5)R	WINNEBAGO	1685	488
		CONTRACT NO. 64C24		
	ILLINOIS	FED. AID PROJECT		

* FAI ROUTE 39 (I-39) & FAP 301 (US 20) *

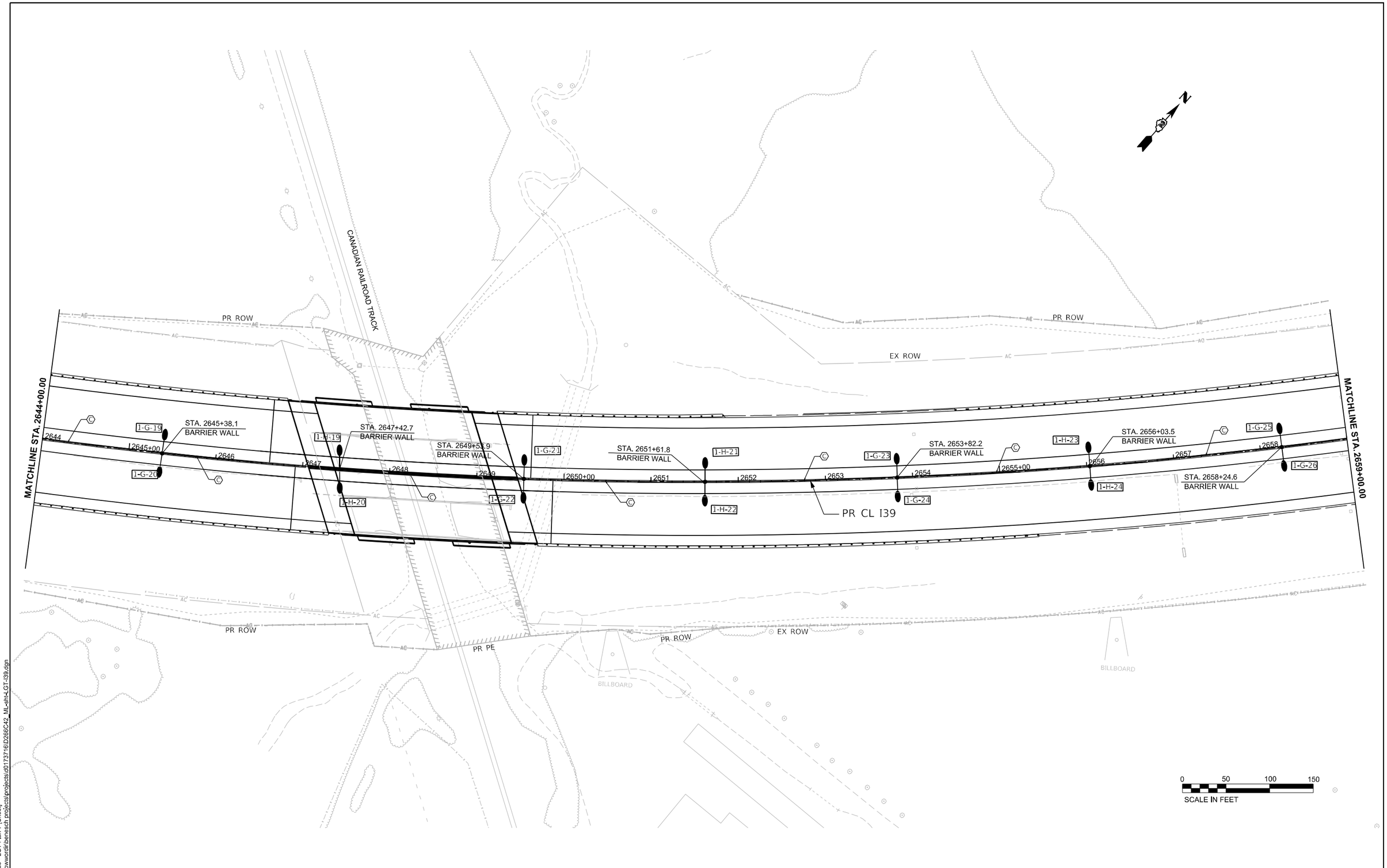

MODEL: I39 Wide - LGT Plan 7 [Sheet]
FILE NAME: c:\pwworkl\benesch projects\projects\d0173716\D266C42_ML-sht-LGT-I39.dgn

benesch
Alfred Benesch & Company
35 W Wacker Drive, Suite 3300
Chicago, Illinois 60601
312-565-6450 Job No. 10800.00

USER NAME = agibson	DESIGNED - R.SCARIA	REVISED -	
	DRAWN - R.SCARIA	REVISED -	
PLOT SCALE = $SCALE$	CHECKED - G.THIESSE	REVISED -	
PLOT DATE = 2/6/2025	DATE - 02/14/2025	REVISED -	

STATE OF ILLINOIS
DEPARTMENT OF TRANSPORTATION

PROPOSED LIGHTING PLAN
I-39

SCALE: 1"=50' | SHEET 4 OF 21 SHEETS | STA. 2644+00.00 TO STA. 2659+00.00

F.A.I RTE.	SECTION	COUNTY	TOTAL SHEETS	SHEET NO.
*	(201-3)R & (4-1.5)R	WINNEBAGO	1685	489
		CONTRACT NO. 64C24		
		ILLINOIS	FED. AID PROJECT	

* FAI ROUTE 39 (I-39) & FAP 301 (US 20)

NOTES:
1. REFER UNDERPASS LIGHTING SHEETS FOR PROPOSED UNDERPASS LIGHTING.

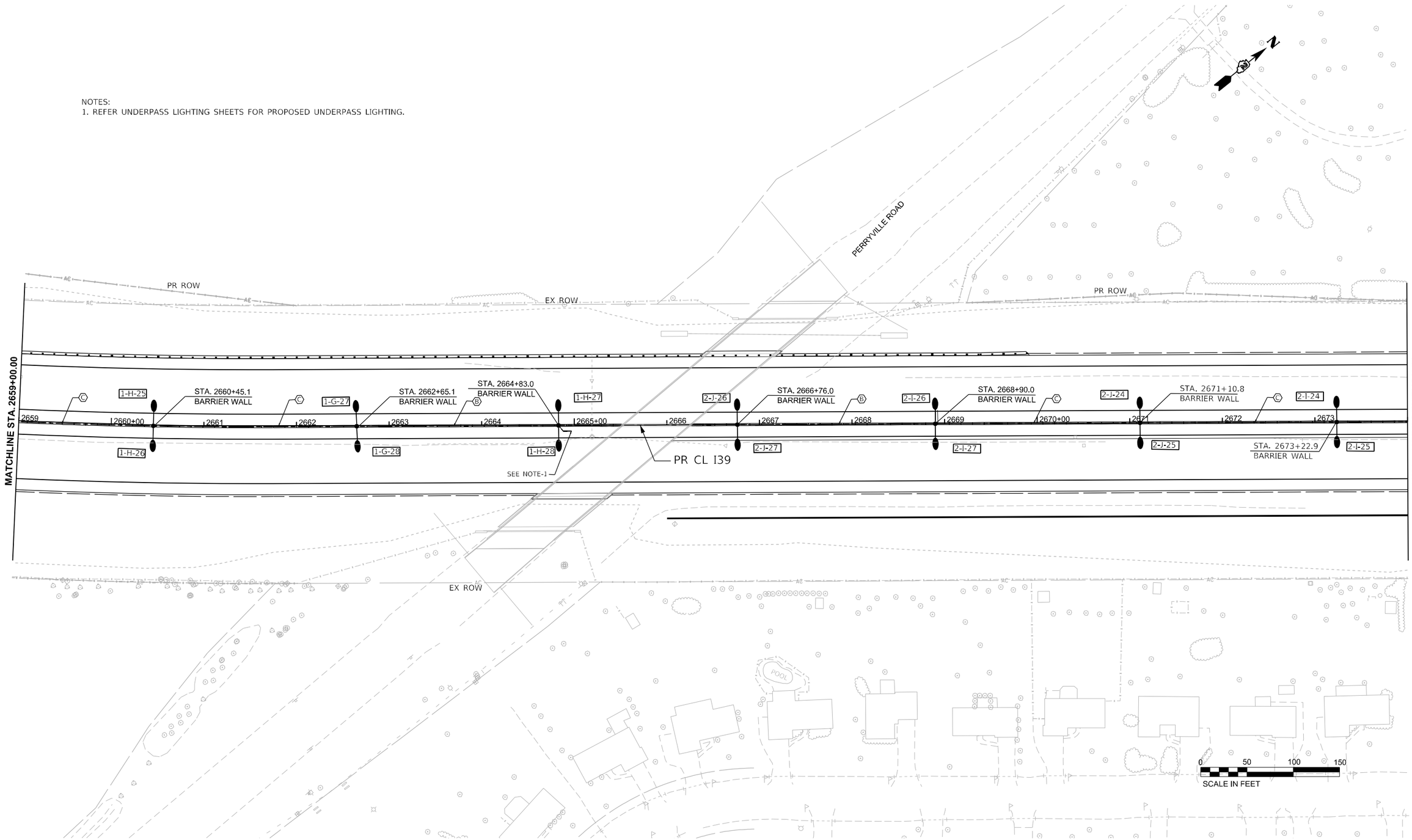

MODEL: I39 Wide - LGT Plan 8 [Sheet]
FILE NAME: c:\pwworkdir\benesch projects\projects\d0173716\D266C42_ML-sht-LGT-I39.dgn

benesch
Alfred Benesch & Company
35 W Wacker Drive, Suite 3200
Chicago, Illinois 60601
312-565-0450 Job No. 10800.00

USER NAME = lfranceschina	DESIGNED - R.SCARIA	REVISED -	
	DRAWN - R.SCARIA	REVISED -	
PLOT SCALE = $SCALE$	CHECKED - G.THIESSE	REVISED -	
PLOT DATE = 8/12/2024	DATE - 02/14/2025	REVISED -	

STATE OF ILLINOIS
DEPARTMENT OF TRANSPORTATION

PROPOSED LIGHTING PLAN
I-39

SCALE: 1"=50' | SHEET 5 OF 21 SHEETS | STA. 2659+00.00 TO STA. 2674+00.00

F.A.I RTE.	SECTION	COUNTY	TOTAL SHEETS	SHEET NO.
*	(201-3)R & (4-1.5)R	WINNEBAGO	1685	490
		CONTRACT NO. 64C24		
	ILLINOIS	FED. AID PROJECT		

* FAI ROUTE 39 (I-39) & FAP 301 (US 20) *

NOTES:
1. REFER UNDERPASS LIGHTING SHEETS FOR PROPOSED UNDERPASS LIGHTING.

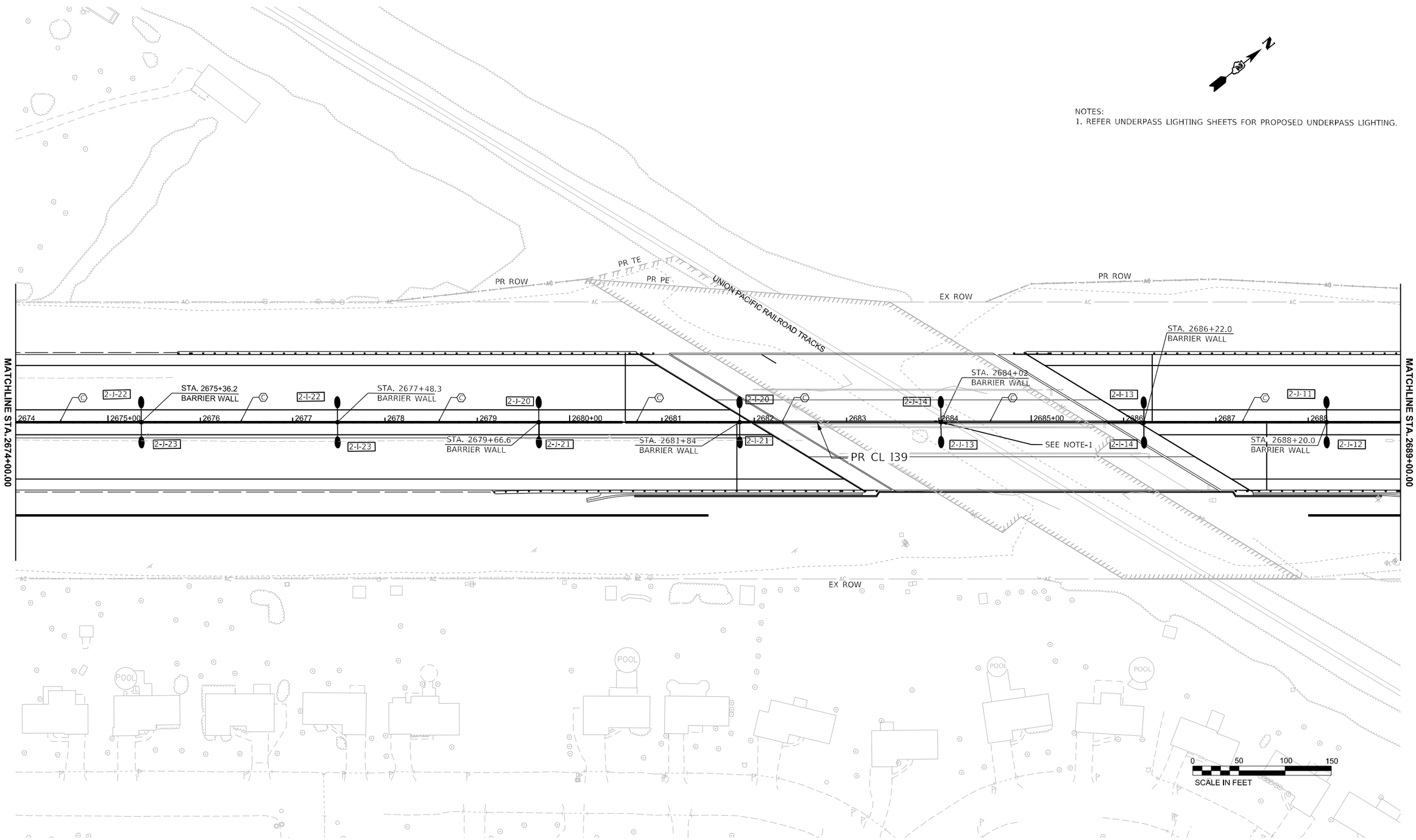

MODEL: I39 Wide - LGT Plan 9 [Sheet]
FILE NAME: c:\pwworkl\benesch projects\projects\d0173716\D266C42_ML-sht4_LGT-I39.dgn

benesch
Alfred Benesch & Company
35 W Wacker Drive, Suite 3200
Chicago, Illinois 60601
312-565-0450 Job No. 10800.00

USER NAME = agibson	DESIGNED - R.SCARIA	REVISED -	
	DRAWN - R.SCARIA	REVISED -	
PLOT SCALE = $SCALE$	CHECKED - G.THIESSE	REVISED -	
PLOT DATE = 2/6/2025	DATE - 02/14/2025	REVISED -	

STATE OF ILLINOIS
DEPARTMENT OF TRANSPORTATION

PROPOSED LIGHTING PLAN
I-39

SCALE: 1"=50' | SHEET 6 OF 21 SHEETS | STA. 2674+00.00 TO STA. 2689+00.00

F.A.I RTE.	SECTION	COUNTY	TOTAL SHEETS	SHEET NO.
*	(201-3)R & (4-1.5)R	WINNEBAGO	1685	491
		CONTRACT NO. 64C24		
	ILLINOIS	FED. AID PROJECT		

* FAI ROUTE 39 (I-39) & FAP 301 (US 20)

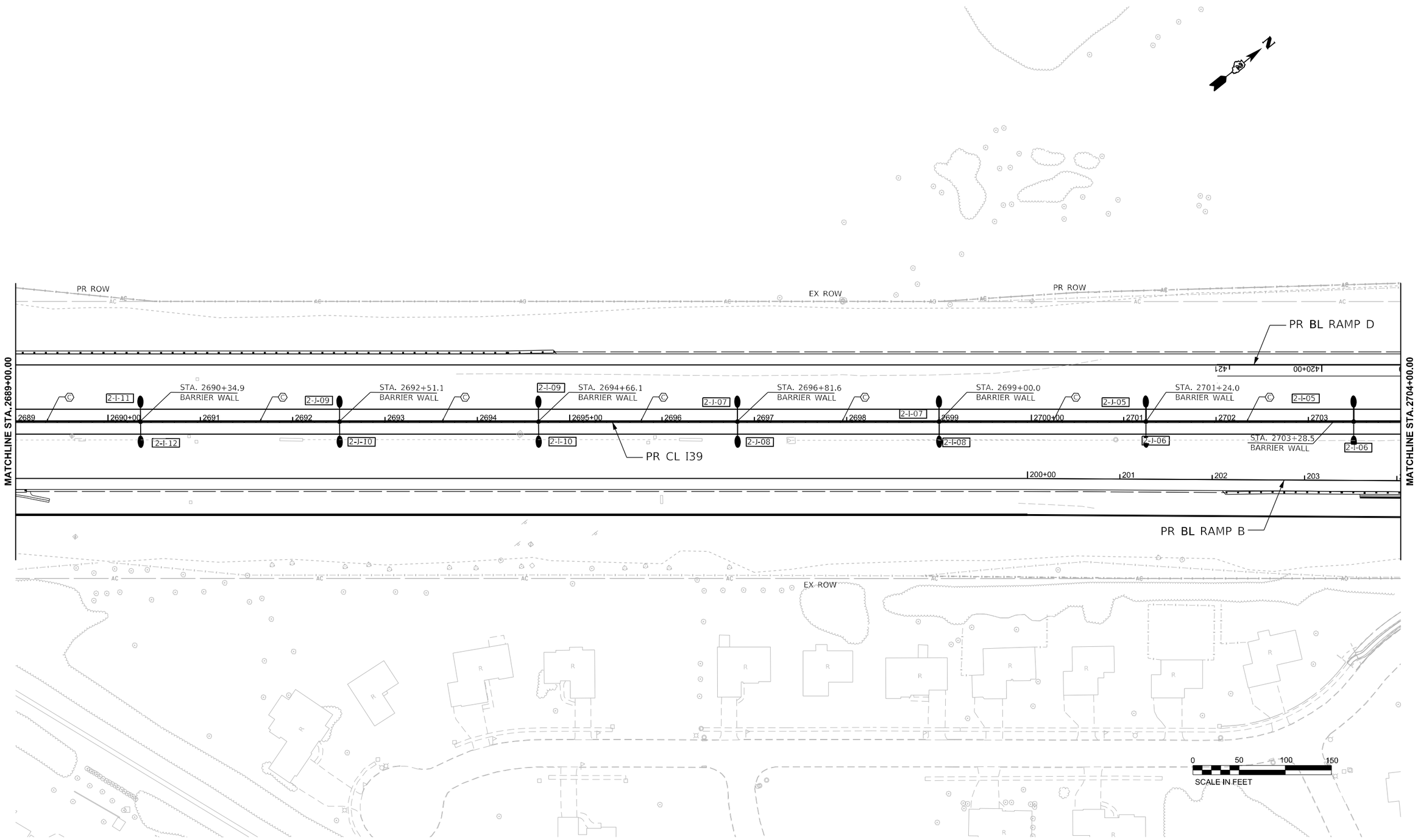

MODEL: I39 Wide - LGT Plan 10 [Sheet]
FILE NAME: c:\pwworkdir\benesch projects\d0173716\D266C42_ML-sht-LGT-I39.dgn

benesch
Alfred Benesch & Company
35 W Wacker Drive, Suite 3200
Chicago, Illinois 60601
312-565-4450 Job No. 10800.00

USER NAME = agibson	DESIGNED - R.SCARIA	REVISED -	
	DRAWN - R.SCARIA	REVISED -	
PLOT SCALE = $SCALE$	CHECKED - G.THIESSE	REVISED -	
PLOT DATE = 2/6/2025	DATE - 02/14/2025	REVISED -	

STATE OF ILLINOIS
DEPARTMENT OF TRANSPORTATION

PROPOSED LIGHTING PLAN
I-39

SCALE: 1"=50' | SHEET 7 OF 21 SHEETS | STA. 2689+00.00 TO STA. 2704+00.00

F.A.I RTE.	SECTION	COUNTY	TOTAL SHEETS	SHEET NO.
*	(201-3)R & (4-1.5)R	WINNEBAGO	1685	492
		CONTRACT NO. 64C24		
		ILLINOIS	FED. AID PROJECT	

* FAI ROUTE 39 (I-39) & FAP 301 (US 20)

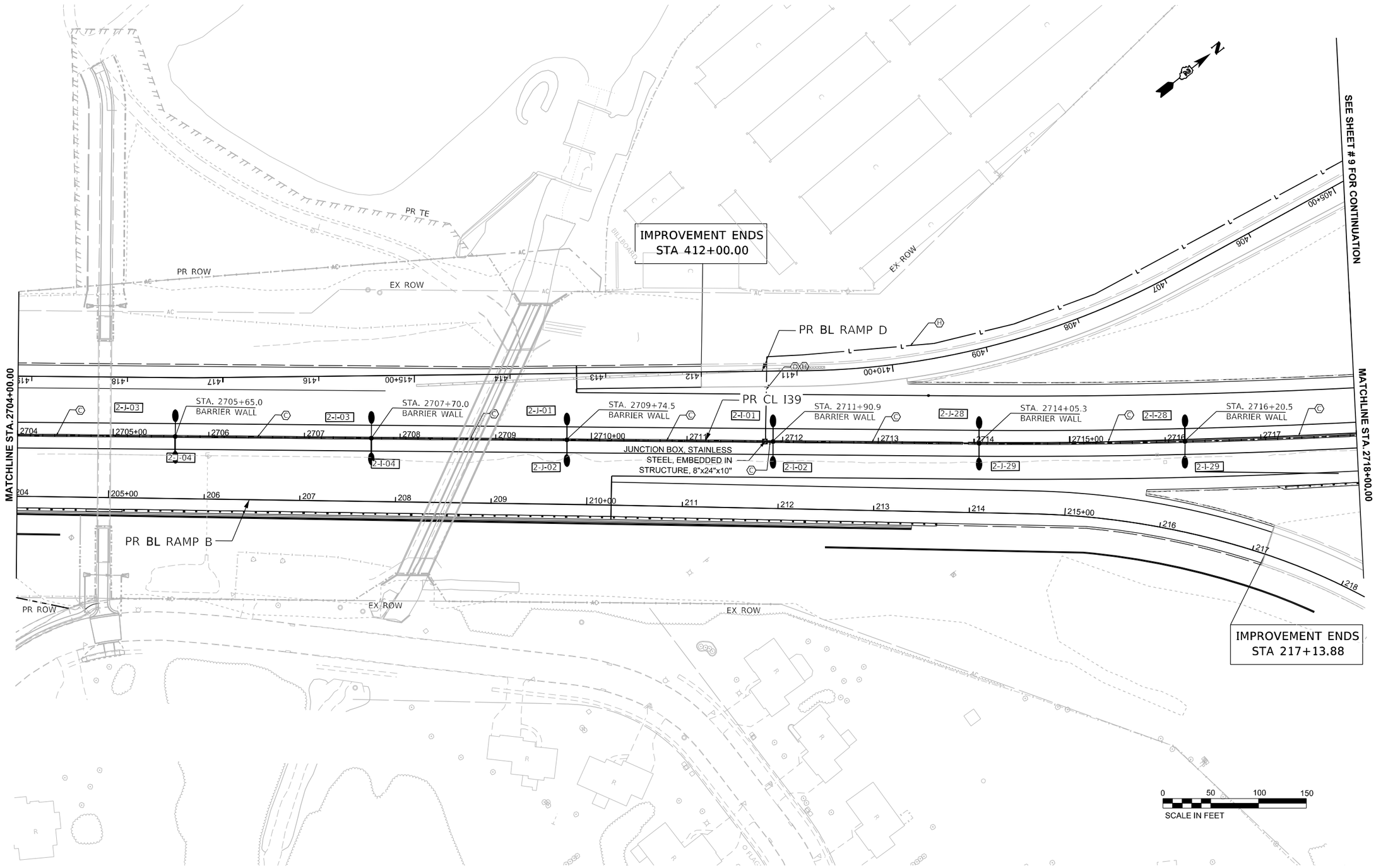

MODEL: I39 Wide - LGT Plan 11 [Sheet]
FILE NAME: c:\pwworkdir\benesch projects\projects\d0173716\D266C42_ML-sht-LGT-I39.dgn

benesch
Alfred Benesch & Company
35 W Wacker Drive, Suite 3300
Chicago, Illinois 60601
312-565-0450 Job No. 10800.00

USER NAME = agibson	DESIGNED - R.SCARIA	REVISED -	
	DRAWN - R.SCARIA	REVISED -	
PLOT SCALE = $SCALE$	CHECKED - G.THIESSE	REVISED -	
PLOT DATE = 2/6/2025	DATE - 02/14/2025	REVISED -	

STATE OF ILLINOIS
DEPARTMENT OF TRANSPORTATION

PROPOSED LIGHTING PLAN
I-39

SCALE: 1"=50' | SHEET 8 OF 21 SHEETS | STA. 2704+00.00 TO STA. 2718+00.00

F.A.I RTE.	SECTION	COUNTY	TOTAL SHEETS	SHEET NO.
*	(201-3)R & (4-1.5)R	WINNEBAGO	1685	493
		CONTRACT NO. 64C24		
		ILLINOIS	FED. AID PROJECT	

* FAI ROUTE 39 (I-39) & FAP 301 (US 20)

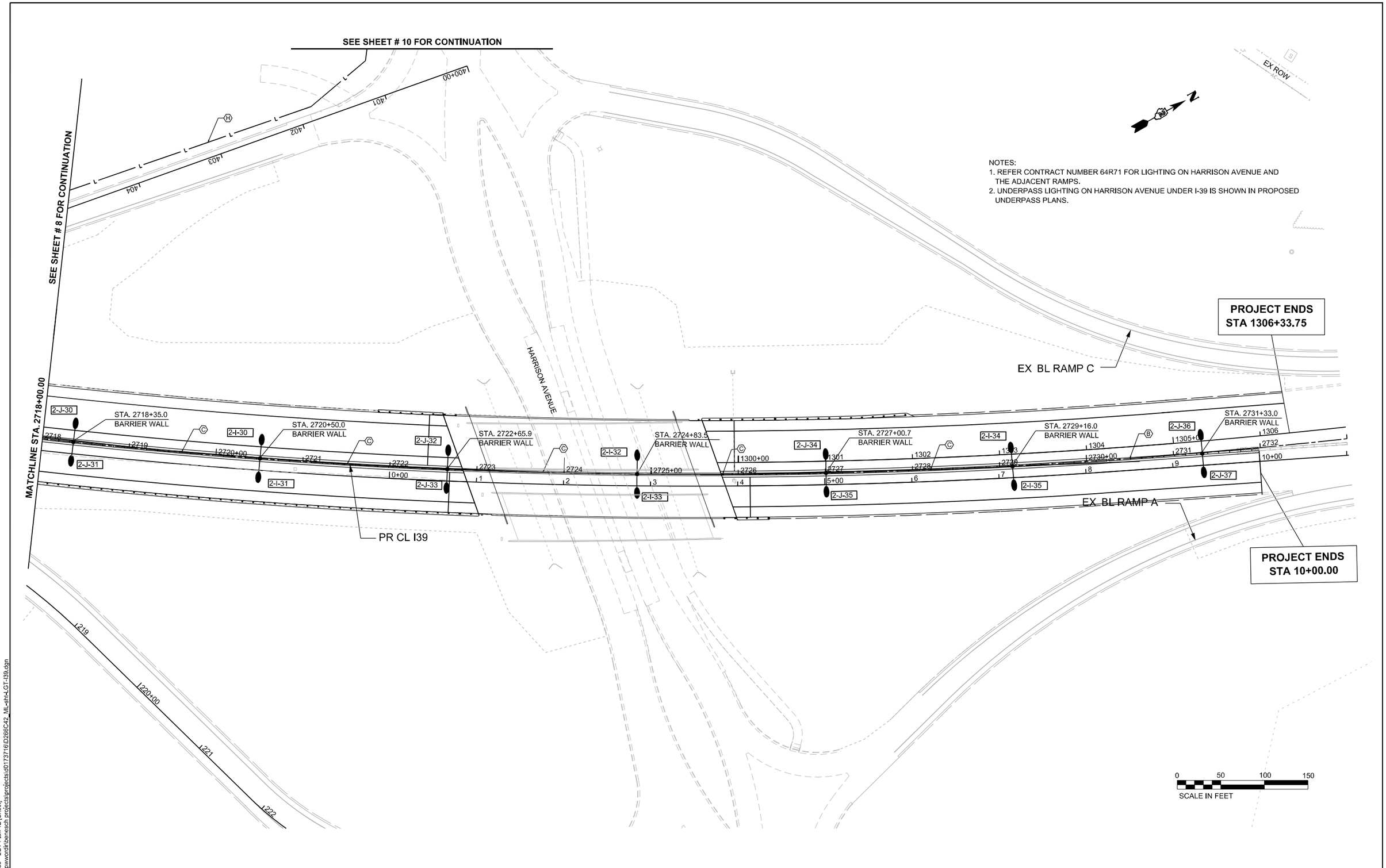

MODEL: I39 Wide - LGT Plan 12 [Sheet]
FILE NAME: c:\pwworkdir\benesch projects\projects\d0173716\D266C42_ML-sht-LGT-I39.dgn

benesch
Alfred Benesch & Company
35 W Wacker Drive, Suite 3300
Chicago, Illinois 60601
312-565-6450 Job No. 10800.00

USER NAME = gthiesse	DESIGNED - R.SCARIA	REVISED -	
	DRAWN - R.SCARIA	REVISED -	
PLOT SCALE = $SCALE$	CHECKED - G.THIESSE	REVISED -	
PLOT DATE = 5/12/2025	DATE - 02/27/24	REVISED -	

STATE OF ILLINOIS
DEPARTMENT OF TRANSPORTATION

PROPOSED LIGHTING PLAN
I-39

SCALE: 1"=50' | SHEET 9 OF 21 SHEETS | STA. 2718+00.00 TO STA. 2733+00.00

F.A.I RTE.	SECTION	COUNTY	TOTAL SHEETS	SHEET NO.
*	(201-3)R & (4-1,5)R	WINNEBAGO	1685	494
		CONTRACT NO. 64C24		
		ILLINOIS	FED. AID PROJECT	

* FAI ROUTE 39 (I-39) & FAP 301 (US 20)

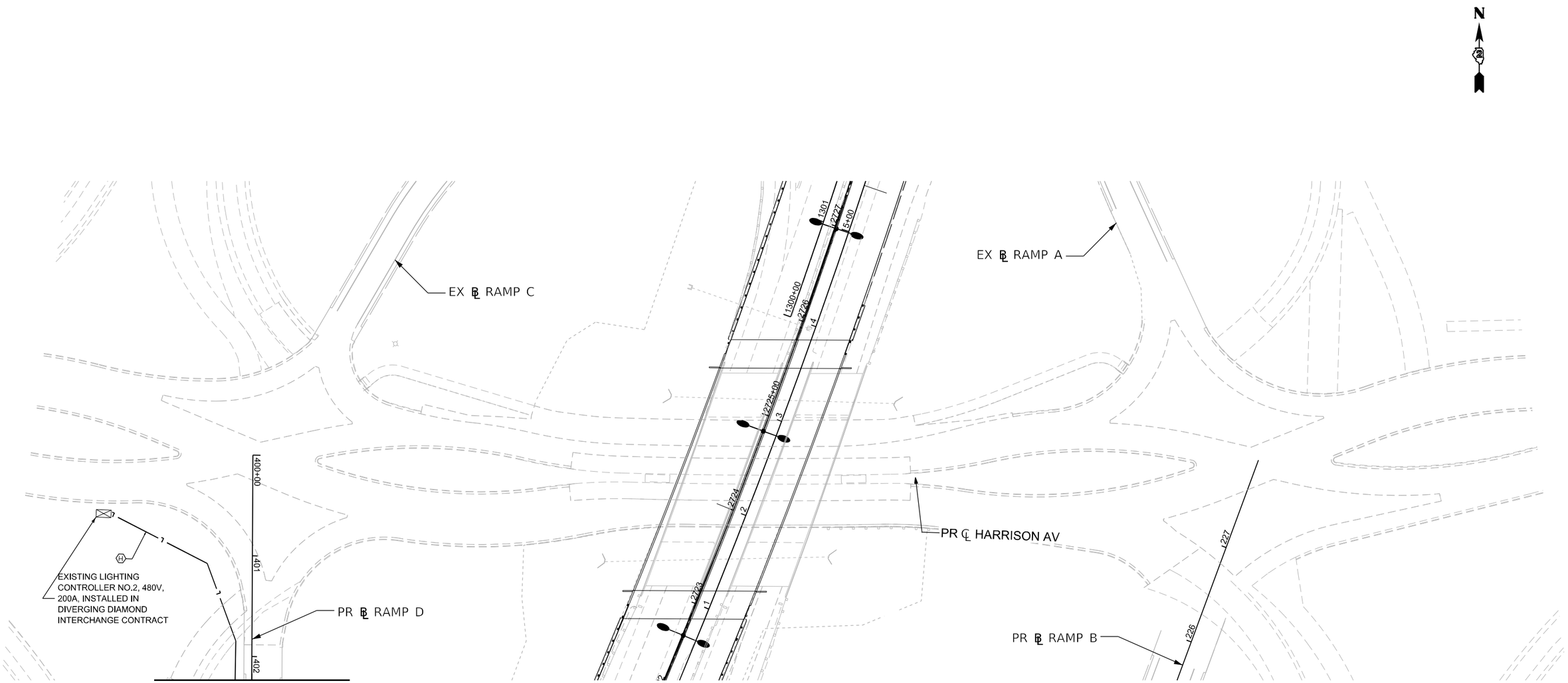

SEE SHEET # 9 FOR CONTINUATION

0 50 100 150
SCALE IN FEET

benesch
Alfred Benesch & Company
35 W Wacker Drive, Suite 3200
Chicago, Illinois 60601
312-565-4450 Job No. 10800.00

USER NAME = agibson	DESIGNED - R. SCARIA	REVISED -	
	DRAWN - R. SCARIA	REVISED -	
PLOT SCALE = $SCALE$	CHECKED - G. THIESSE	REVISED -	
PLOT DATE = 8/13/2024	DATE - 02/14/2025	REVISED -	

STATE OF ILLINOIS
DEPARTMENT OF TRANSPORTATION

PROPOSED LIGHTING PLAN
HARRISON AVE

SCALE: 1"=50' | SHEET 10 OF 21 SHEETS | STA. 0+00.00 TO STA. 0+00.00

F.A.I RTE.	SECTION	COUNTY	TOTAL SHEETS	SHEET NO.
*	(201-3)R & (4-1,5)R	WINNEBAGO	1685	495
		CONTRACT NO. 64C24		
	ILLINOIS	FED. AID PROJECT		

* FAI ROUTE 39 (I-39) & FAP 301 (US 20)

MODEL: Harrison - Plan 3 [Sheet]
FILE NAME: c:\pwworkr\benesch projects\projects\d0173716\D284C24_ML-sht-LGT PL-HAR.dgn

EX ROW

S. PERRYVILLE ROAD

STA. 2666+35.8, 61.5' LT
SUSPEND MOUNT

1-H-30

STA. 2665+84.7, 4.5' RT
WALL MOUNT, 15.5' M.H

JUNCTION BOX, STAINLESS STEEL 8"x24"x10",
EMBEDDED IN MEDIAN BARRIER
(SEE NOTE-1)

BRIDGE STRUCTURE NO. 101-0206
REFER STRUCTURE PLANS FOR DETAILS.

1-H-27

2663 2664 2665+00 2666 2667 2668

1-G-29

1-H-29

1-H-28

STA. 2665+75, 7.5' RT
WALL MOUNT, 15.5' M.H

PR CL I39

JUNCTION BOX, STAINLESS STEEL, 6"x6"x4" (TYP.)

JUNCTION BOX, STAINLESS STEEL 14"x12"x6",
ATTACHED TO STRUCTURE
(SEE NOTE-2)

1-G-30

STA. 2665+41, 61.5' RT
SUSPEND MOUNT

NOTES:

1. CONDUIT TRANSITION FROM THE MEDIAN MOUNTED JUNCTION BOX SHALL BE AS PER IDOT STANDARD 821001.
2. JUNCTION BOX SHALL BE PROVIDED WITH 20A FUSE AND SURGE PROTECTION DEVICE.

0 20 40 60
SCALE IN FEET

EX ROW

MODEL: Underpass Lighting - Plan 1 [Sheet]
FILE NAME: c:\pwworld\benesch projects\projects\d0173716\D264C24_ML-sht-ProUnderpassLighting.dgn

benesch
Alfred Benesch & Company
35 W Wacker Drive, Suite 3200
Chicago, Illinois 60601
312-565-0450 Job No. 10800.00

USER NAME = lfranceschina	DESIGNED - R.SCARIA	REVISED -	
	DRAWN - R.SCARIA	REVISED -	
PLOT SCALE = $SCALE$	CHECKED - G.THIESSE	REVISED -	
PLOT DATE = 8/12/2024	DATE - 02/14/2025	REVISED -	

STATE OF ILLINOIS
DEPARTMENT OF TRANSPORTATION

UNDERPASS LIGHTING PLAN
I-39 UNDER PERRYVILLE RD

SCALE: 1"=20' | SHEET 11 OF 21 SHEETS | STA. 2662+50.00 TO STA. 2668+50.00

F.A.I RTE.	SECTION	COUNTY	TOTAL SHEETS	SHEET NO.
*	(201-3)R & (4-1.5)R	WINNEBAGO	1685	496
		CONTRACT NO. 64C24		
		ILLINOIS	FED. AID PROJECT	

* FAI ROUTE 39 (I-39) & FAP 301 (US 20)

NOTES:
1. 2" CONDUIT SLEEVE SHALL BE INSTALLED EMBEDDED TO THE STRUCTURE FOR UNDERPASS LIGHTING TRANSITION. (SEE STRUCTURAL PLANS)
2. JUNCTION BOX, STAINLESS STEEL, 14"x12"x6" ATTACHED TO STRUCTURE.
3. ALL UNDERPASS LIGHTS SHALL BE INSTALLED WITH A 10 DEGREE TILT.
4. ALL JUNCTION BOXES FOR LUMINAIRES SHALL BE STAINLESS STEEL AND OF SIZE 6"x6"x4". (TYP.)
5. LIGHTING CONTROLLER THAT FEEDS UNDERPASS LIGHTING IS LOCATED AT HARRISON AVENUE AT STA. NO. 146+80.20 INSTALLED IN THE 64R71 CONTRACT.
6. JUNCTION BOX SHALL BE PROVIDED WITH 20A FUSE AND SURGE PROTECTION DEVICE.

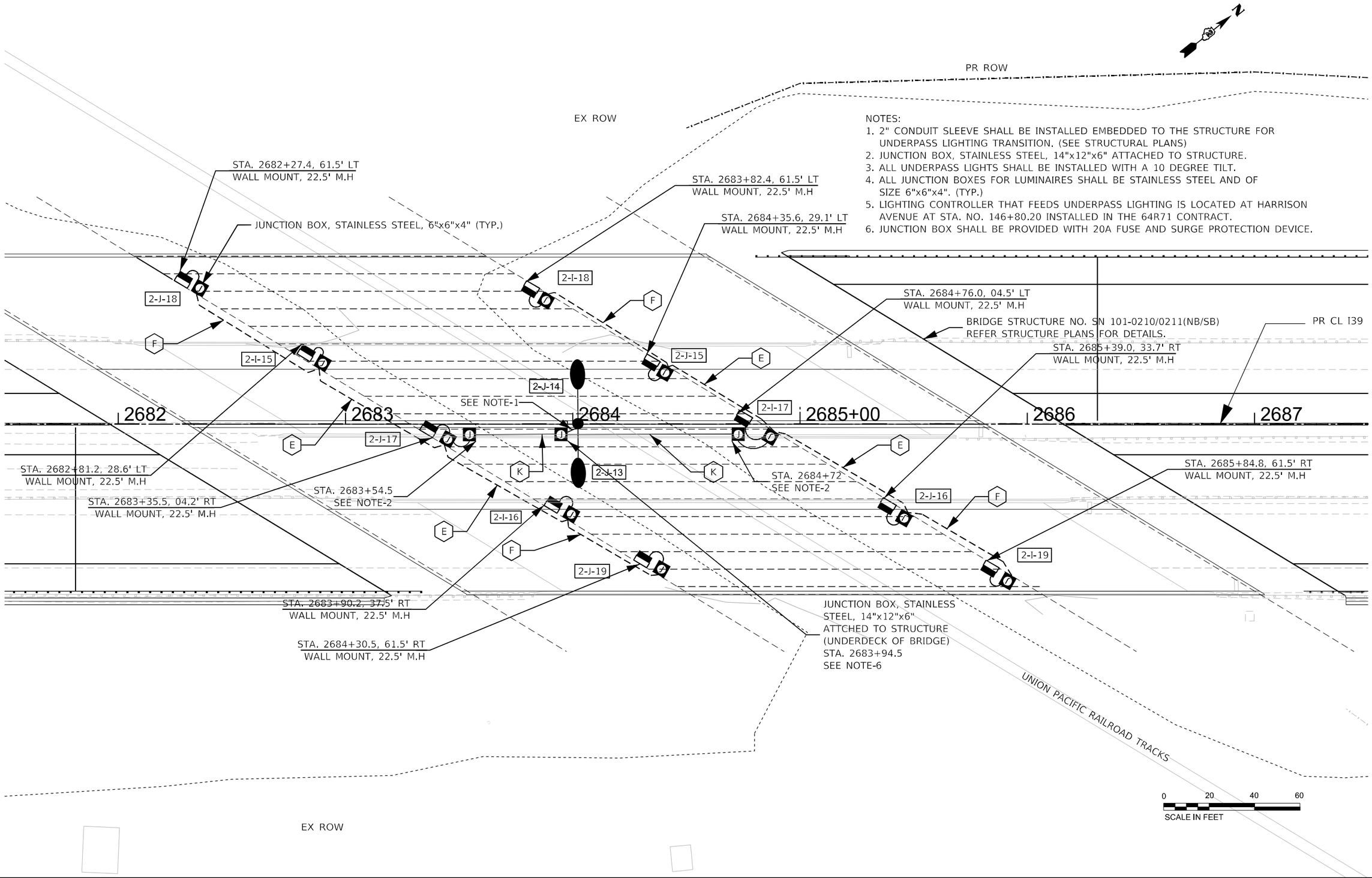

benesch
Alfred Benesch & Company
35 W Wacker Drive, Suite 3200
Chicago, Illinois 60601
312-565-0450 Job No. 10800.00

USER NAME = agibson	DESIGNED - R.SCARIA	REVISED -	
	DRAWN - R.SCARIA	REVISED -	
PLOT SCALE = $SCALE$	CHECKED - G.THIESSE	REVISED -	
PLOT DATE = 2/6/2025	DATE - 02/14/2025	REVISED -	

STATE OF ILLINOIS
DEPARTMENT OF TRANSPORTATION

UNDERPASS LIGHTING PLAN
I-39 OVER UPRR

SCALE: 1"=20' | SHEET 12 OF 21 SHEETS | STA. 2681+50.00 TO STA. 2687+50.00

F.A.I RTE.	SECTION	COUNTY	TOTAL SHEETS	SHEET NO.
*	(201-3)R & (4-1.5)R	WINNEBAGO	1685	497
		CONTRACT NO. 64C24		
		ILLINOIS	FED. AID PROJECT	

* FAI ROUTE 39 (I-39) & FAP 301 (US 20)

MODEL: Underpass Lighting - Plan 2 [Sheet]
FILE NAME: c:\pwworkf\benesch projects\projects\d0173716\D264C24_ML-sht-ProUnderpassLighting.dgn

NOTES:
1. EXISTING LIGHT POLE INSTALLED IN THE 64R71 CONTRACT.
2. CONDUIT TRANSITION FROM THE UNIT DUCT COMING OUT OF THE LIGHT POLE SHALL BE AS PER IDOT STANDARD 821001.
3. JUNCTION BOX SHALL BE PROVIDED WITH 20A FUSE AND SURGE PROTECTION DEVICE.
4. JUNCTION BOX SHALL BE STAINLESS STEEL, ATTACHED TO STRUCTURE, 12"x10"x6"

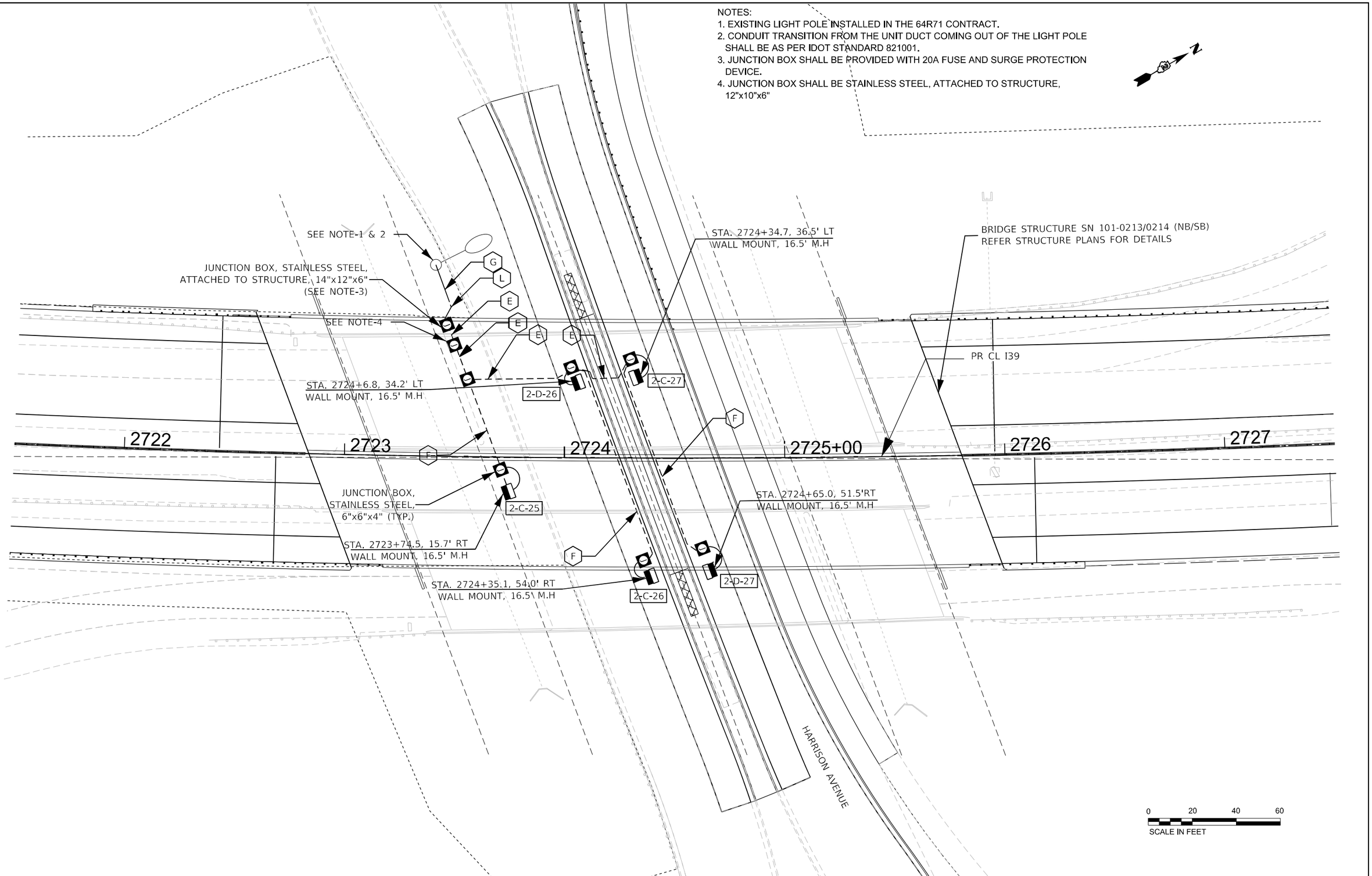

MODEL: Underpass Lighting - Plan 3 [Sheet]
FILE NAME: c:\pwworkdir\benesch projects\projects\d0173716\D264C24_ML-sht-ProUnderpassLighting.dgn

benesch
Alfred Benesch & Company
35 W Wacker Drive, Suite 3200
Chicago, Illinois 60601
312-565-4450 Job No. 10800.00

USER NAME = agibson	DESIGNED - R.SCARIA	REVISED -	
	DRAWN - R.SCARIA	REVISED -	
PLOT SCALE = $SCALE$	CHECKED - G.THIESSE	REVISED -	
PLOT DATE = 2/6/2025	DATE - 02/14/2025	REVISED -	

STATE OF ILLINOIS
DEPARTMENT OF TRANSPORTATION

UNDERPASS LIGHTING PLAN
I-39 OVER HARRISON AVE

SCALE: 1"=20' | SHEET 13 OF 21 SHEETS | STA. 2721+50.00 TO STA. 2727+50.00

F.A.I RTE.	SECTION	COUNTY	TOTAL SHEETS	SHEET NO.
*	(201-3)R & (4-1.5)R	WINNEBAGO	1685	498
		CONTRACT NO. 64C24		
	ILLINOIS	FED. AID PROJECT		

* FAI ROUTE 39 (I-39) & FAP 301 (US 20)

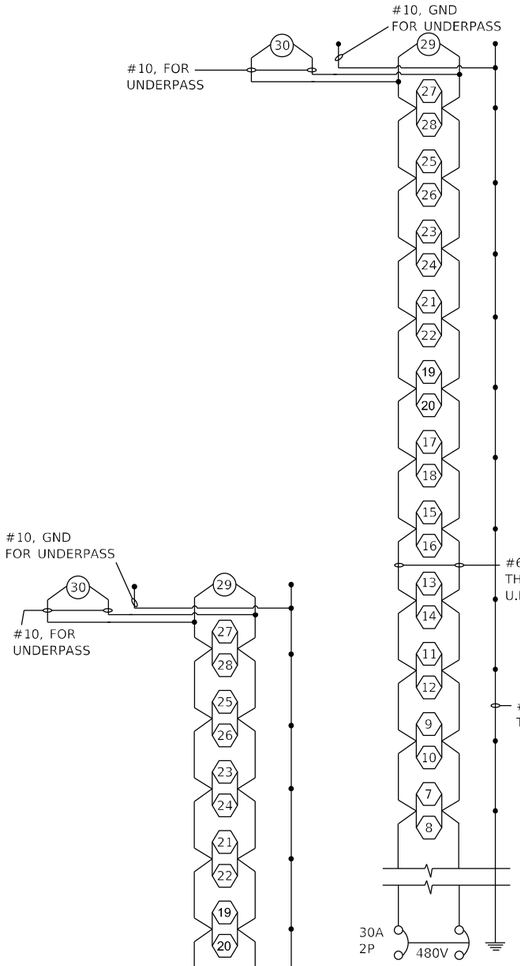

CIRCUIT H
(CONTROLLER-1)

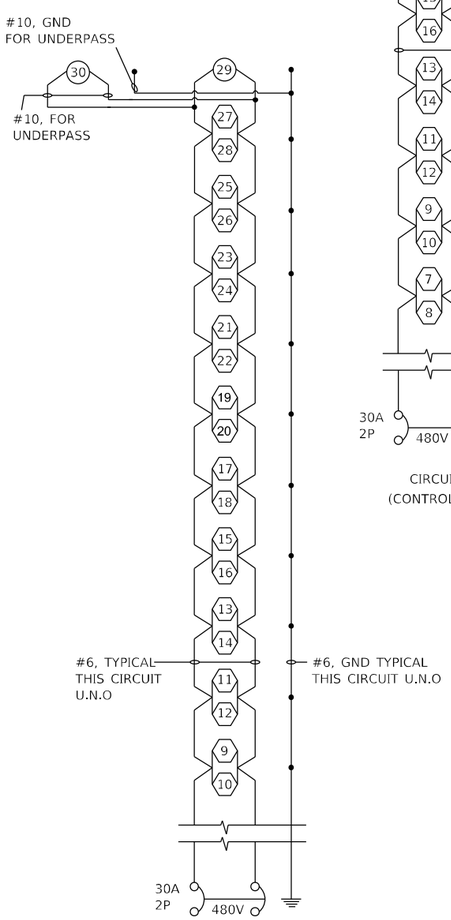

CIRCUIT G
(CONTROLLER-1)

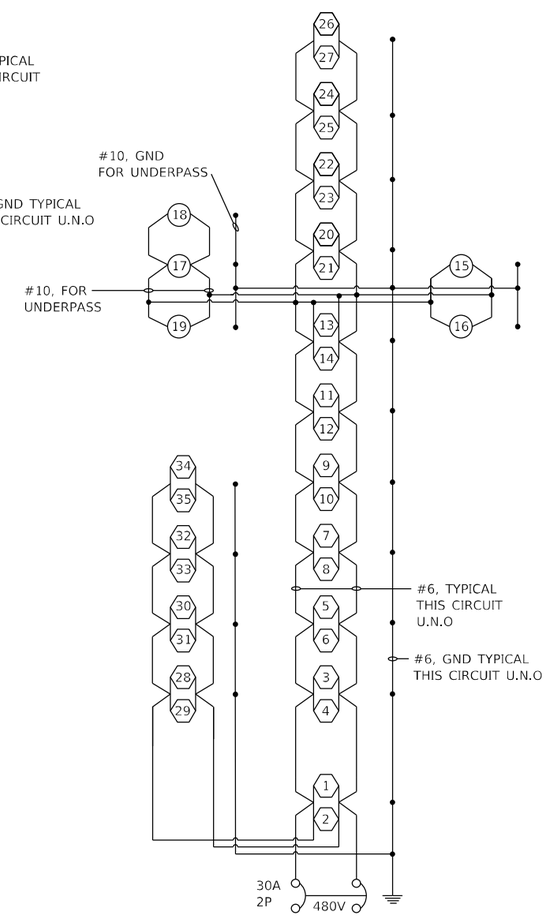

CIRCUIT I
(CONTROLLER-2)

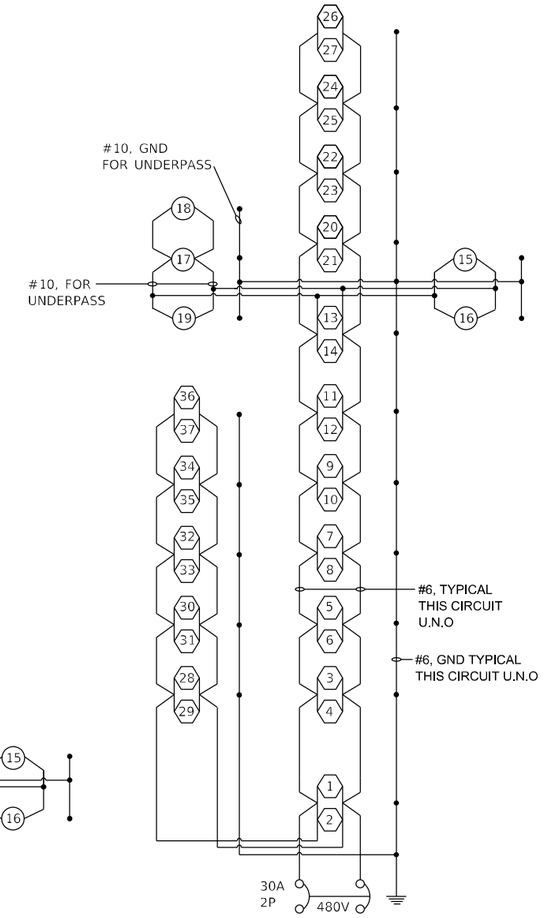

CIRCUIT J
(CONTROLLER-2)

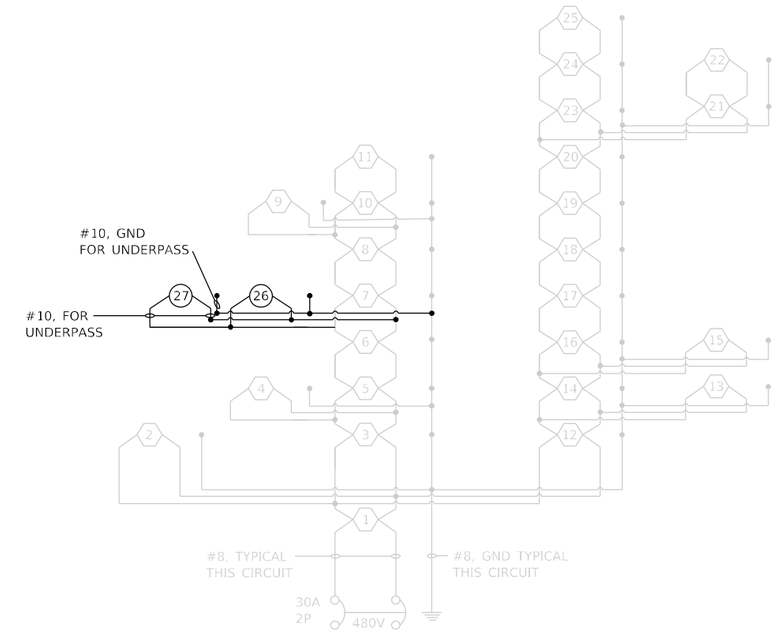

CIRCUIT D
(CONTROLLER-2)
(THE CIRCUIT IS MOSTLY INSTALLED IN 64R71
CONTRACT EXCEPT FOR THE UNDERPASSES)

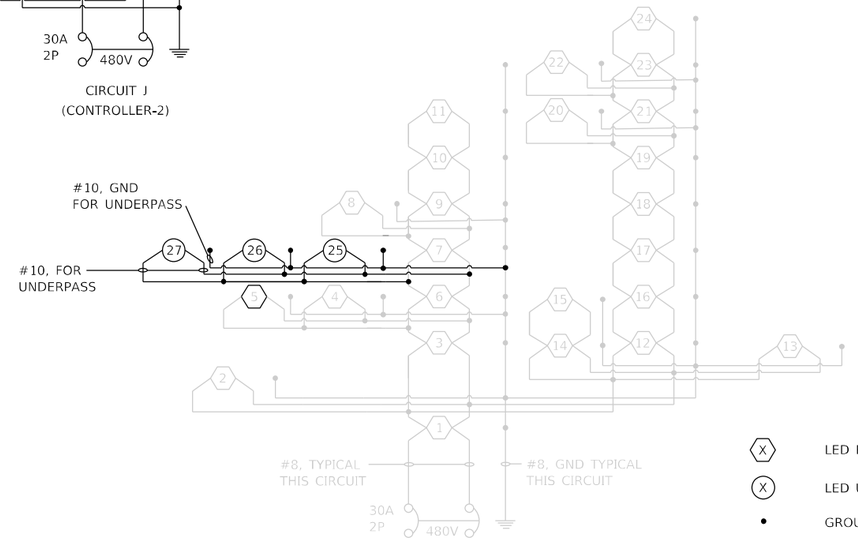

CIRCUIT C
(CONTROLLER-2)
(THE CIRCUIT IS MOSTLY INSTALLED IN 64R71
CONTRACT EXCEPT FOR THE UNDERPASSES)

X — LED ROADWAY LUMINAIRE, DESIGNATION H

X — LED UNDERPASS LUMINAIRE, DESIGNATION E

• — GROUND CONNECTION AT EACH POLE

GROUND ROD

1. BOND EACH JUNCTION BOX TO EQUIPMENT GROUNDING CONDUCTOR.

MODEL: Schematics [Sheet]
FILE NAME: c:\pwworkdir\benesch projects\projects\d1737161\D264C24_ML-sh-Schematics-1.dgn

benesch
Alfred Benesch & Company
35 W Wacker Drive, Suite 3200
Chicago, Illinois 60601
312-565-0450 Job No. 10800.00

USER NAME = lfranceschina	DESIGNED - R.SCARIA	REVISED -	
	DRAWN - R.SCARIA	REVISED -	
PLOT SCALE = $SCALE$	CHECKED - G.THIESSE	REVISED -	
PLOT DATE = 8/12/2024	DATE - 02/14/2025	REVISED -	

STATE OF ILLINOIS
DEPARTMENT OF TRANSPORTATION

PROPOSED LIGHTING DETAILS
SCHEMATICS

SCALE: | SHEET 14 OF 21 SHEETS | STA. | TO STA.

F.A.I RTE.	SECTION	COUNTY	TOTAL SHEETS	SHEET NO.
*	(201-3)R & (4-1.5)R	WINNEBAGO	1685	499
		CONTRACT NO. 64C24		
	ILLINOIS	FED. AID PROJECT		

* FAI ROUTE 39 (I-39) & FAP 301 (US 20)

Illinois Department of Transportation

Luminaire Performance Table

Reset Form

Project

Date	Contract Number	Section Number	County
01/25/24	D264C24	(201-3)K	Winnebago

Marked Route Number	Municipality
I-39 / US-20	VILLAGE OF CHERRY VALLEY

Roadway

Lane Width	# of Lanes	Median Width	I.E.S. Surface Classification	Q-Zero Value
12'	3	18'	R3	0.07

Structure

Mounting Height	Arm Length	Set-Back	Number of Luminaires (Highmast & Sign Lighting Only)
45'	12'	3'	N/A

Luminaire

Description	I.E.S. Lateral Distribution	I.E.S. Distribution (Transverse)
LUM., LED, ROADWAY,DESIGNATION H	MEDIUM	TYPE III

Total Light Loss Factor (LLF)	B-U-G Rating	Shields	Dimming Protocol
0.7	U=0	0	0

Layout

Spacing (to Nearest 5 ft)	Configuration (Opposite, Staggered, 1 Sided, or Median)
225'	MEDIAN

Performance

Average Illuminance, E_{AVE} (fc)	Uniformity Ratio, E_{AVE}/E_{MIN}
0.9	3.0

Average Luminance, L_{AVE} (cd/m²)	Uniformity Ratio, L_{AVE}/L_{MIN}	Uniformity Ratio, L_{MAX}/L_{MIN}	Veiling Luminance Ratio, L_V/L_{AVE}
0.6	3.0	5.0	0.3

Light Tresspass

Distance to ROW (behind pole)	Max. Horizontal Illuminance at ROW, E_H	Max. Vertical Illuminance at ROW, E_V
N/A	N/A	N/A

Notes

3 LANES IN EACH DIRECTION

Printed 01/25/24

BDE 5630 (04/10/19)

Illinois Department of Transportation

Luminaire Performance Table

Reset Form

Project

Date	Contract Number	Section Number	County
01/25/24	D264C24	(201-3)K	Winnebago

Marked Route Number	Municipality
I-39 / US-20	VILLAGE OF CHERRY VALLEY

Roadway

Lane Width	# of Lanes	Median Width	I.E.S. Surface Classification	Q-Zero Value
12'	3	27'	R3	0.07

Structure

Mounting Height	Arm Length	Set-Back	Number of Luminaires (Highmast & Sign Lighting Only)
15.5'	N/A	1'	N/A

Luminaire

Description	I.E.S. Lateral Distribution	I.E.S. Distribution (Transverse)
UNDERPASS LUM., LED, DESIGNATION E	MEDIUM	TYPE III

Total Light Loss Factor (LLF)	B-U-G Rating	Shields	Dimming Protocol
0.7	U=0	0	0

Layout

Spacing (to Nearest 5 ft)	Configuration (Opposite, Staggered, 1 Sided, or Median)
70'	OPPOSITE

Performance

Average Illuminance, E_{AVE} (fc)	Uniformity Ratio, E_{AVE}/E_{MIN}
0.9	3.0

Average Luminance, L_{AVE} (cd/m²)	Uniformity Ratio, L_{AVE}/L_{MIN}	Uniformity Ratio, L_{MAX}/L_{MIN}	Veiling Luminance Ratio, L_V/L_{AVE}
0.6	3.0	5.0	0.3

Light Tresspass

Distance to ROW (behind pole)	Max. Horizontal Illuminance at ROW, E_H	Max. Vertical Illuminance at ROW, E_V
N/A	N/A	N/A

Notes

LED, UNDERPASS LUMINAIRE,OPPOSITE, WALL MOUNTED

Printed 01/25/24

BDE 5630 (04/10/19)