ROUTE NO.	SEC.	COUNTY	TOTAL SHEETS	SHEET NO.
F.A. 194	4-VB 4-VF	WINNEBAGO	27 3	1 1
STA.		TO STA.		
FED. ROAD DIST. NO. 7	ILLINOIS		PROJ. FG-284(17)	

97-J

STATE OF ILLINOIS
DEPARTMENT OF PUBLIC WORKS AND BUILDINGS
DIVISION OF HIGHWAYS

PLANS FOR PROPOSED FEDERAL AID HIGHWAY

I. C. R. R. BRIDGE

WINNEBAGO COUNTY

ROCKFORD BYPASS

F.A. ROUTE 194 SECTION 4 V B
SECTION 4 V F
PROJECT FG-284(17)

INDEX OF SHEETS

SEC. 4-VF	SEC. 4-VB	
1.	1.	TITLE SHEET
2.	2.	GENERAL NOTES - BORING LOGS - SUMMARY OF QUANTITIES
3.	3.	PLAN & PROFILE
4.	4.	GENERAL PLAN
	5.	PIERS 1 & 2
	6.	ABUTMENTS - ELEVATIONS
	7.	ABUTMENTS - PLANS
	8.	ABUTMENT FOOTING
5.	9.	DECK PLAN - PART 1
6.	10.	DECK PLAN - PART 2
7.	11.	FRAMING PLAN
8.	12.	STEEL DETAILS
	13.	HANDRAIL DETAILS
	14.	REINFORCING SCHEDULE (E.B. ROADWAY)
	15.	REINFORCING SCHEDULE (W.B. ROADWAY)
	16.	CROSS SECTIONS
	17.	CROSS SECTIONS
	18.	CROSS SECTIONS
	19.	CROSS SECTIONS
	20.	CROSS SECTIONS
	21.	SPECIAL HEADWALLS (STA. 8 + 50)
	22.	SPECIAL HEADWALLS (STA. 797 + 77)
	23.	JUNCTION CHAMBER (STA. 797 + 35.80)
	24.	PILE STANDARDS
	25.	STD. 1971-3 (ROAD UNDER CONSTRUCTION SIGN) STD. 1972-1 (BARRICADE) STD. 2114 (FLAGMAN'S TRAFFIC CONTROL SIGN)
	26.	STD. 1976 (HEADWALLS FOR PIPE CULVERTS) STD. 2-220 (INLETS, SPECIAL)
	27.	STD. 2113 (NAME PLATE) STD. 2158-1 (HIGHWAY IMPROVEMENT SIGN)

SECTION 4VB CONSISTS OF THE CONSTRUCTION OF TWO WF BEAM GRADE SEPARATION BRIDGES, SPANS: 1 @ 52'-3", 1 @ 61'-0", 1 @ 52'-3" AT STATION 796+23.52 AT THE INTERSECTION OF THE ROCKFORD BYPASS AND THE I.C.R.R. WITH THE EXCEPTION OF FURNISHING, FABRICATING, SHOP PAINTING AND DELIVERY OF THE STRUCTURAL STEEL.

SECTION 4-VF CONSISTS OF FURNISHING, FABRICATING, SHOP PAINTING AND DELIVERY OF STRUCTURAL STEEL. F.O.B. THE I.C.R.R. SIDING AT THE BRIDGE SITE, FOR TWO THREE-SPAN WF BEAM GRADE SEARATION STRUCTURES, CARRYING F.A. 194 OVER THE I.C.R.R. AT STATION 796+28.52

ROAD CLASSIFICATION
F.A. ROUTE 194

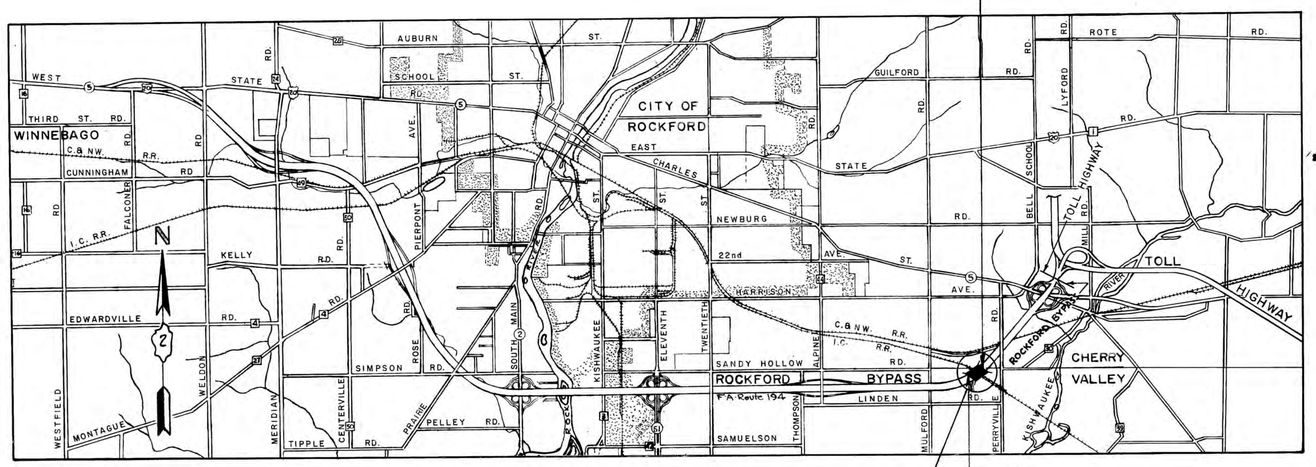

PROJECT LENGTH = 169.67 FEET = 0.032 MILES

PROJECT FG-284(17)
ENDS STA. 797+11.96

PROJECT FG-284(17)
BEGINS STA. 795+42.28

LOCATION OF SECTION INDICATED THUS:—

APPROVED
FOR STRUCTURAL ADEQUACY ONLY
W. E. Baumann 2/12/62
Engineer of Bridge & Traffic Structures

STATE OF ILLINOIS
DEPARTMENT OF PUBLIC WORKS AND BUILDINGS
DIVISION OF HIGHWAYS

SUBMITTED FEB. 1 19 62
M. M. Mensler — DISTRICT ENGINEER

EXAMINED March 19 19 62
A. Wan Lindsdell — ENGINEER OF ROAD PLANS AND CONTRACTS

PASSED March 19 19 62
[illegible] — ENGINEER OF DESIGN

APPROVED March 19 19 62
M. H. Walker — CHIEF HIGHWAY ENGINEER

APPROVED March 19 19 62
[illegible] — DIRECTOR

DEPARTMENT OF COMMERCE
BUREAU OF PUBLIC ROADS

APPROVED

DIVISION ENGINEER	DATE

ENTIRE SECTION INSPECTED AND APPROVED AS TO POLICY.

DATE FEB. 1, 1962

DISTRICT ENGINEER M. M. Mensler

MACCABEE, CAMPBELL & ASSOCIATES

CONSULTING ENGINEERS
173 W. MADISON ST. CHICAGO, ILL.

Job No 22332 (4VF) & 22333 (4VB)

ROUTE NO.	SEC.	COUNTY	TOTAL SHEETS	SHEET NO.
F.A.194	4VB (4VF)	WINNEBAGO	27 (3)	4
STA.		TO STA.		
FED. ROAD DIST. NO. 7	ILLINOIS		PROJ.	

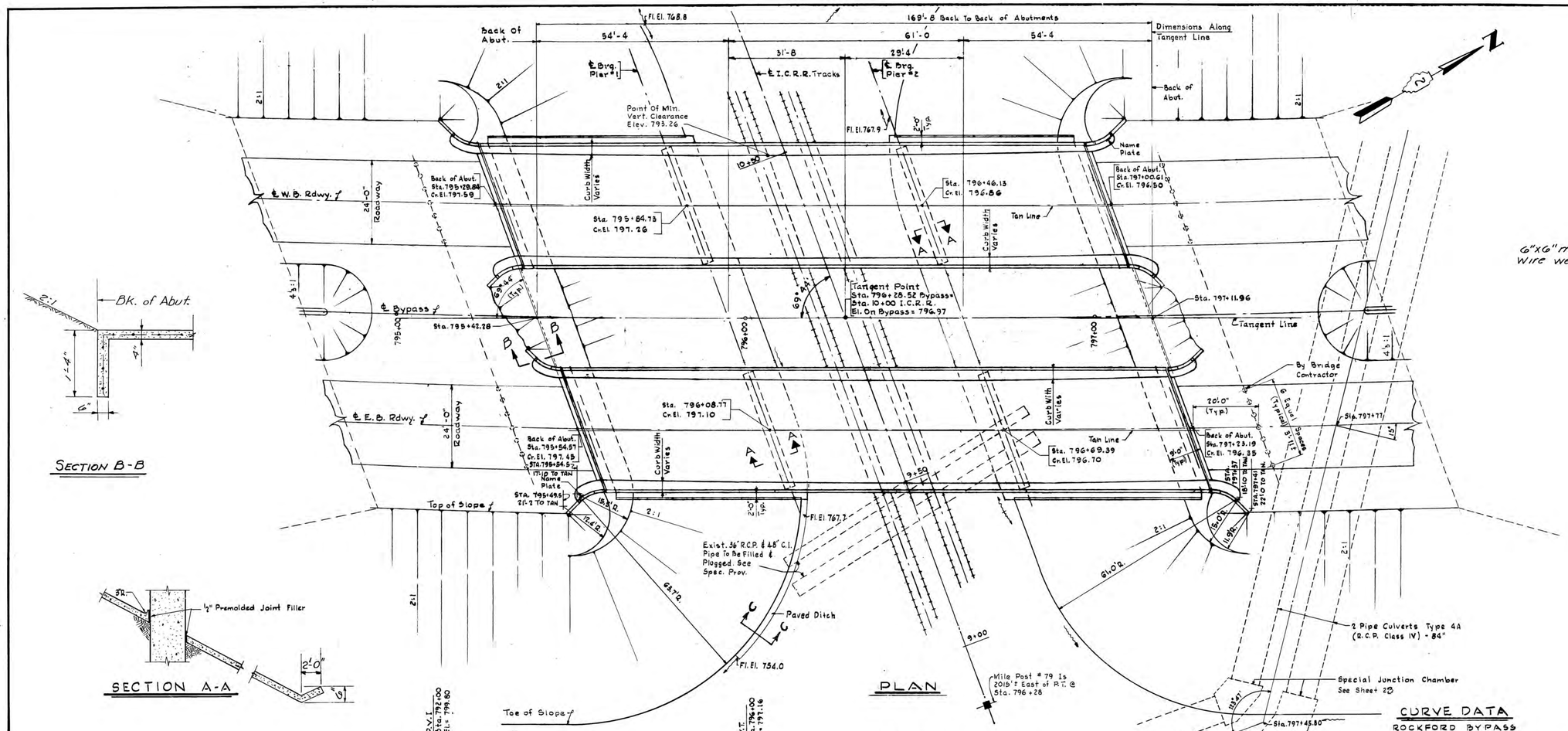

PLAN

Note:
½" Premolded Joint Filler shall be used between slopewall and abutments.

ELEVATION

SECTION B-B

SECTION A-A

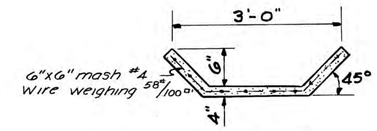

SECTION C-C

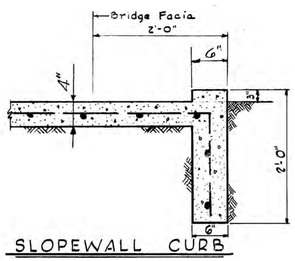

SLOPEWALL CURB

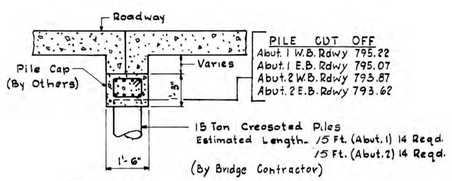

PILE CUT OFF
Abut. 1 W.B. Rdwy 795.22
Abut. 1 E.B. Rdwy 795.07
Abut. 2 W.B. Rdwy 793.87
Abut. 2 E.B. Rdwy 793.62

DETAIL A

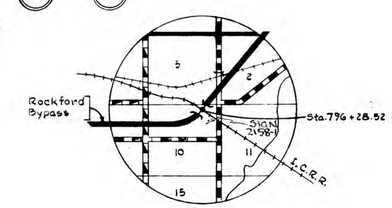

VICINITY MAP
T 43 N., R. 2 E., 3RD P.M.

STATION 796+28.52
BUILT 19 BY
STATE OF ILLINOIS
F.A. RT. 194 SEC. 4VB
F.A. PROJ. F-284
LOADING H20-S16

See State of Illinois Std. 2113

NAME PLATE
(2 Req'd.)

CURVE DATA

ROCKFORD BYPASS

∆	=	50° 41' 00"
D	=	1° 00' 00"
T	=	271.50'
L	=	506.33'
R	=	5729.65
E	=	6.10.04
P.C.	=	Sta. 759+22.29
S	=	0.01%

Full Superelevation Sta. 759+72.29 To Sta. 809+40.62

DESIGN DATA

SPECIFICATIONS:

A.A.S.H.O. Dated 1957. Standard Specifications For Road And Bridge Construction Dated January 2, 1958.

LOADING:

L.L. H 20-S16-44
D.L. 20 P.S.F. Future Wearing Surface

STRESSES:

CONCRETE
fc = 1400 P.S.I. Superstructure n = 10
fc 1000 P.S.I. Substructure (With Earth Pressure)
fc 1400 P.S.I. Substructure (Without Earth Pressure)
75 P.S.I. Max. Allowable V In Pier Footings

STEEL
Structural = 18000 P.S.I.
Reinforcing = 20000 P.S.I.

ILLINOIS DIVISION OF HIGHWAYS
ROCKFORD BYPASS

F.A. ROUTE 194
PROJECT _____ SECTION 4-VB
WINNEBAGO COUNTY

GENERAL PLAN

Designed By: E.S. | Drawn By: G.W.G. | Checked By: [illegible]

SHEET NO. 12TR DRAFTEE

ROUTE NO.	SECTION	COUNTY	TOTAL SHEETS	SHEET NO.
F.A.194	4-VB	WINN.	27	5
STA.	TO STA.			
FED. ROAD DIST. NO. 7	ILLINOIS		PROJ.	

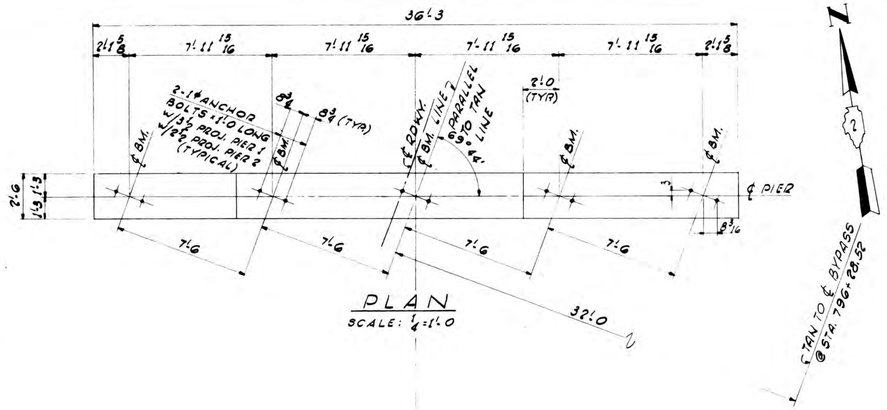

PLAN
SCALE: ¼"=1'-0

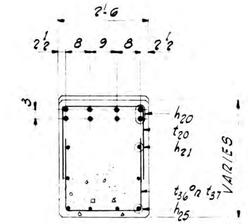

SECTION A-A

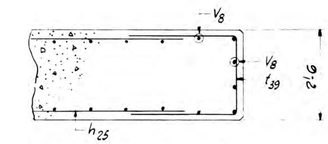

SECTION B-B

PIER	TOP OF CONCRETE ELEVATIONS		
	A	B	C
1-E.B. RDWY.	792.17	792.24	792.35
1-W.B. RDWY.	792.32	792.40	792.51
2-E.B. RDWY.	791.84	791.92	792.03
2-W.B. RDWY.	792.00	792.07	792.18

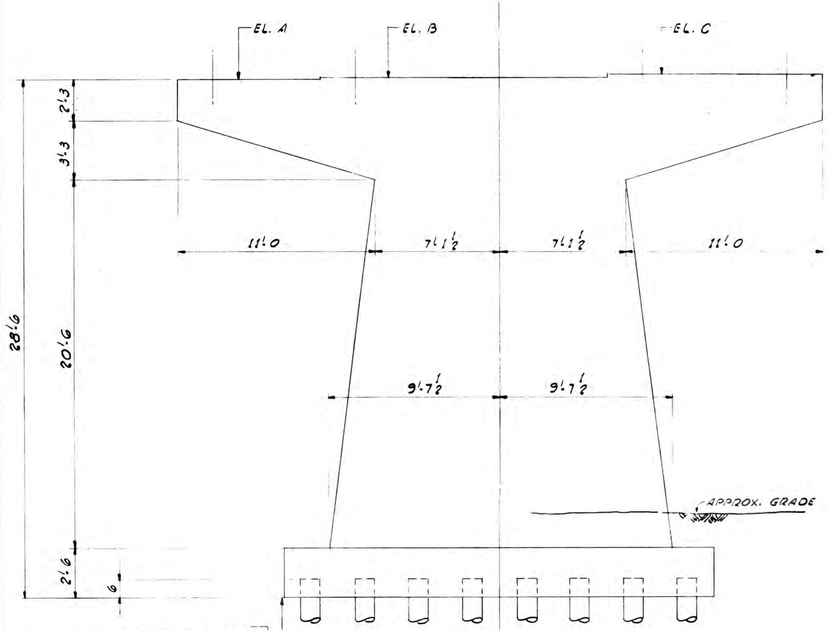

PIER 1 (W.B. RDWY.) EL. 793.82
PIER 1 (E.B. RDWY.) EL. 793.67
PIER 2 (W.B. RDWY.) EL. 793.50
PIER 2 (E.B. RDWY.) EL. 793.34

DIMENSIONS

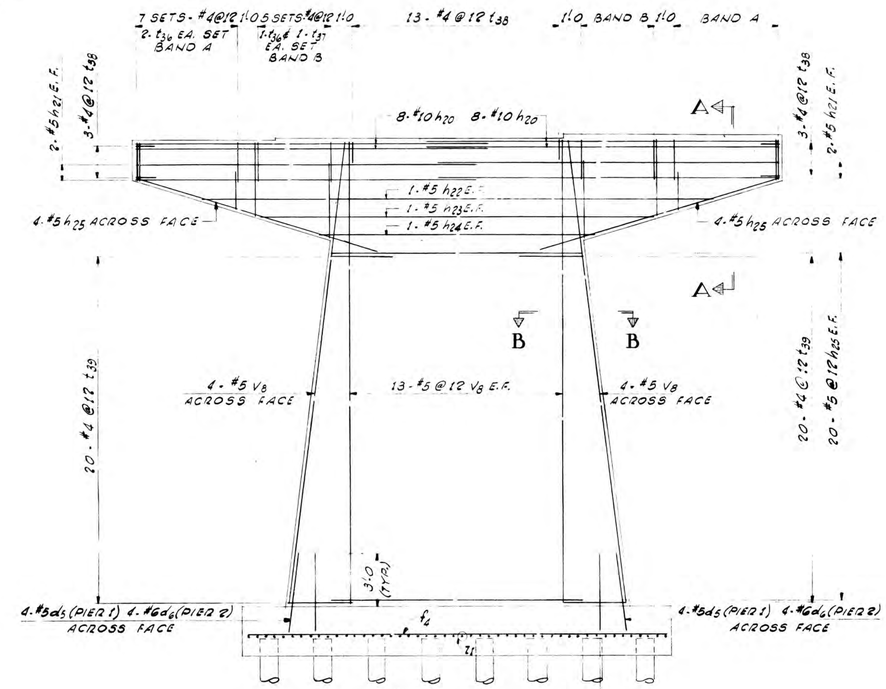

ELEVATION
SCALE: ¼"=1'-0

REINFORCEMENT

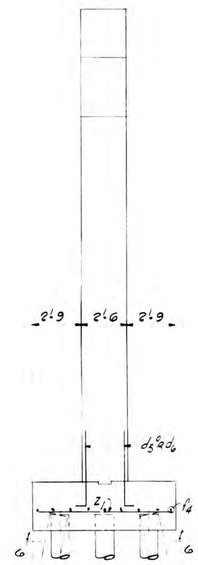

END VIEW
SCALE: ¼"=1'-0

NOTE:
BATTERED PILES FOR PIER 2 ONLY.

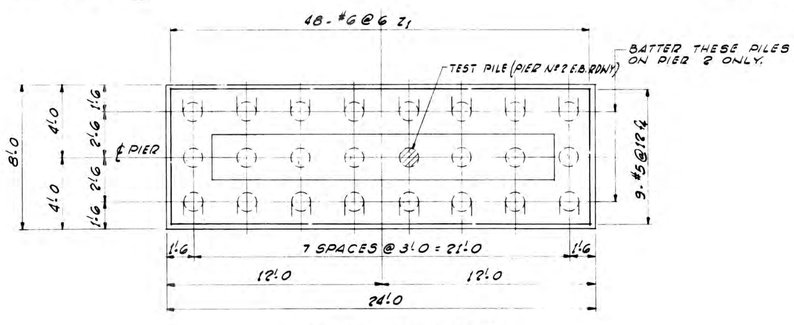

FOOTING PLAN
SCALE: ¼"=1'-0

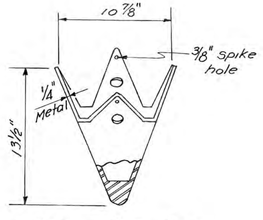

METAL PILE SHOE
(Total number req'd.=*96)
* includes one for test pile

NOTES
FOR GENERAL NOTES SEE SHT. No 2.
FOR REINFORCING SCHEDULES SEE SHT. Nos 14 & 15

PILE DATA
20 TON CREOSOTED PILES.
ESTIMATED LENGTH 15 FT.
NUMBER REQUIRED ____ 95
EACH SHOD WITH A METAL SHOE.

QUANTITIES FOR PIERS (4)

ITEM	UNIT	TOTAL
CLASS "X" CONCRETE	CU.YDS.	258.4
REINFORCEMENT BARS	LBS.	19132
CREOSOTED PILES	LIN.FT.	1425
TEST PILE (TIMBER)	EACH	1
METAL SHOES	EACH	95

ILLINOIS DIVISION OF HIGHWAYS
ROCKFORD BYPASS
F.A. ROUTE 194
PROJECT _____ SECTION 4-VB
WINNEBAGO COUNTY
PIERS 1 & 2

Designed By: Drawn By: Quantities By:
Checked By: Checked By: Checked By:

ROUTE NO.	SECTION	COUNTY	TOTAL SHEETS	SHEET NO.
F.A.194	4-VB	WINN.	27	6
STA.	TO STA.			
FED. ROAD DIST. NO. 7 ILLINOIS		PROJ.		

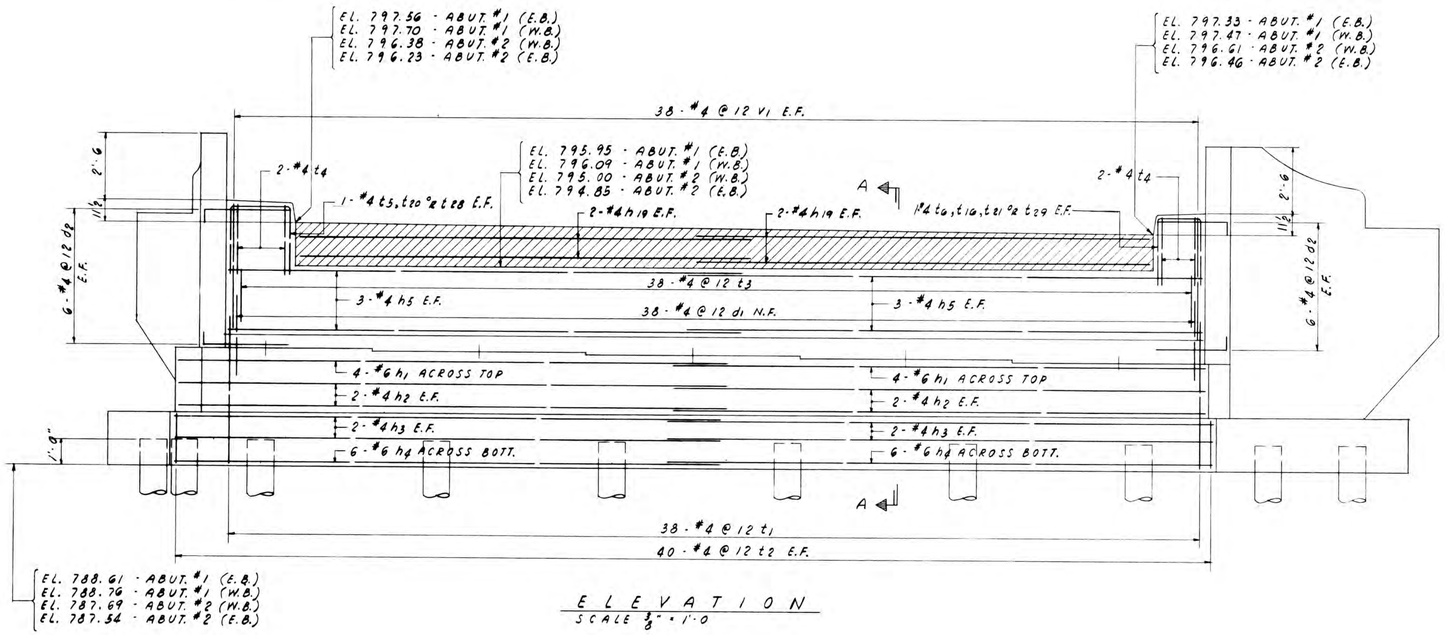

ELEVATION
SCALE 3/8" = 1'-0

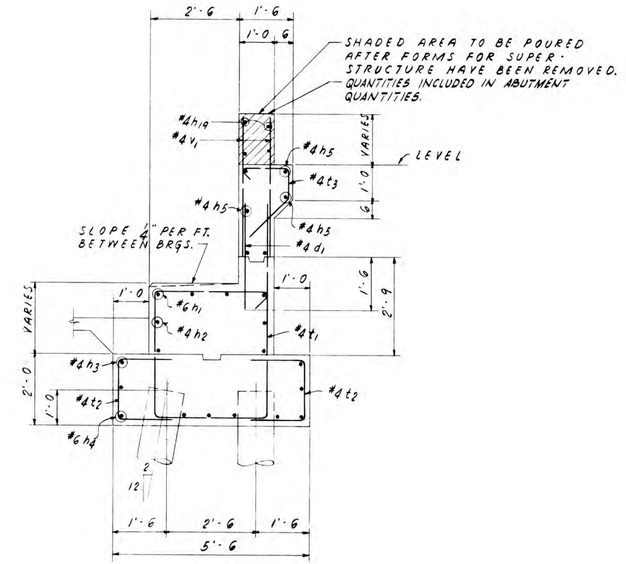

SECTION "A - A"
SCALE 1/2" = 1'-0

BEAM SEAT ELEV'S.
ABUT. #1 E.B. RDWY.

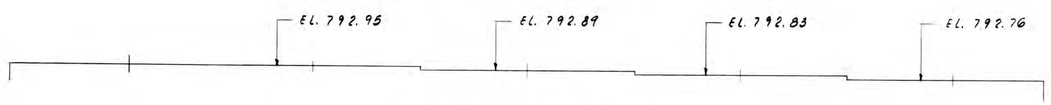

BEAM SEAT ELEV'S.
ABUT. #1 W.B. RDWY.

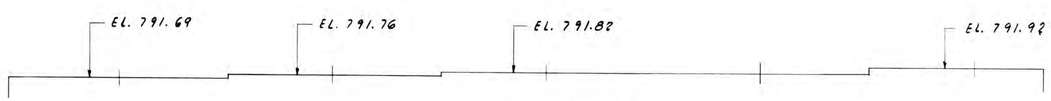

BEAM SEAT ELEV'S.
ABUT. #2 W.B. RDWY.

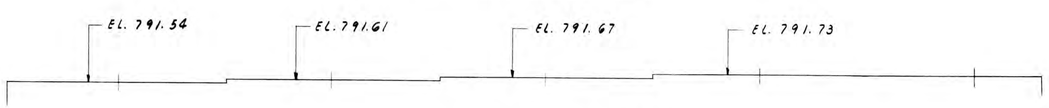

BEAM SEAT ELEV'S.
ABUT. #2 E.B. RDWY.

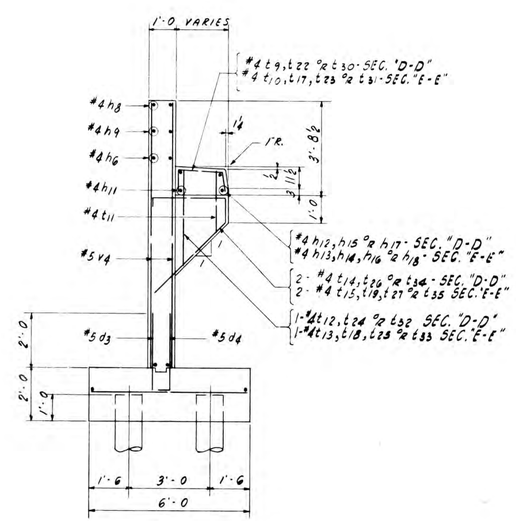

SECTION "D - D"
SECTION "E - E"
SCALE 3/8" = 1'-0

WORK THIS DWG. WITH SHEETS 7 & 8

ILLINOIS DIVISION OF HIGHWAYS
ROCKFORD BYPASS
F.A. ROUTE 194
PROJECT _____ SECTION 4-VB
WINNEBAGO COUNTY

ABUTMENTS-ELEVATIONS

Designed By: L.W.	Drawn By: L.W.	Quantities By:
Checked By:	Checked By:	Checked By:

ROUTE NO.	SECTION	COUNTY	TOTAL SHEETS	SHEET NO.
F.A.194	4-VB	WINN.	27	7
STA.		TO STA.		
FED. ROAD DIST. NO. 7	ILLINOIS		PROJ.	

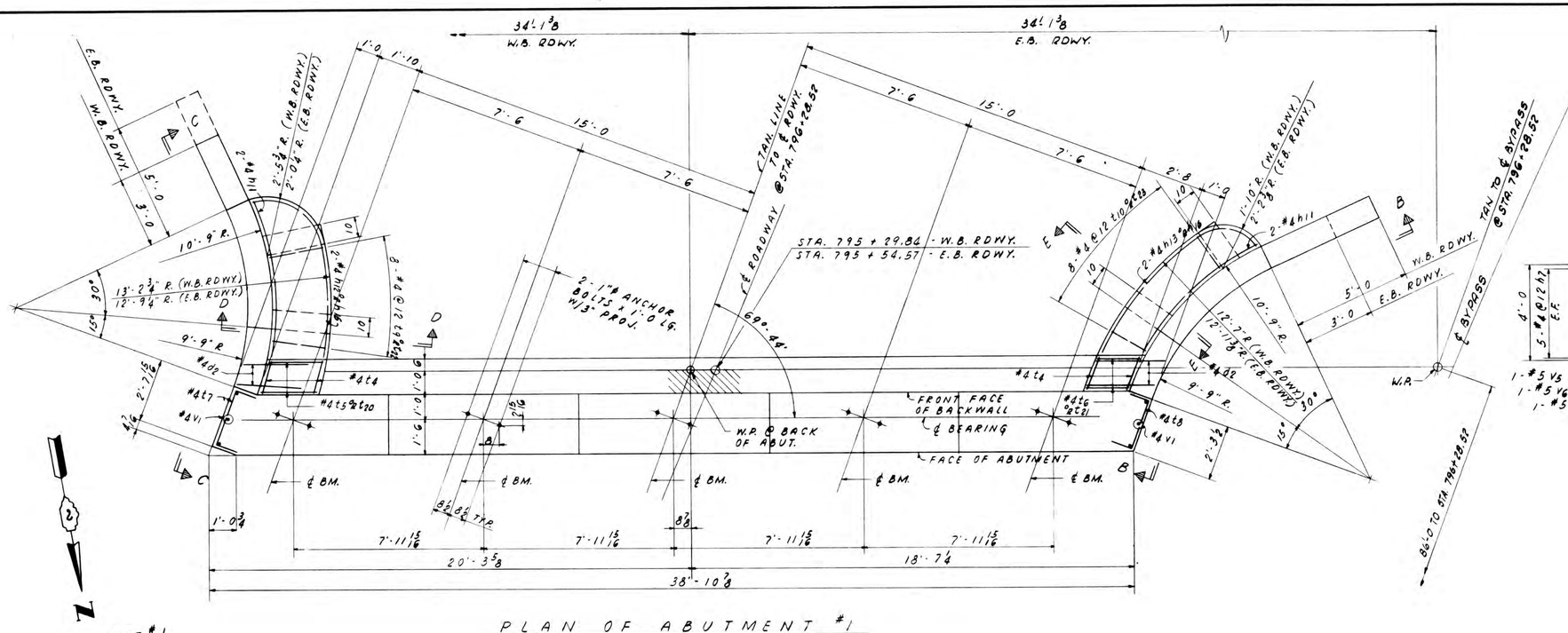

FOR ABUT. #1

PLAN OF ABUTMENT #1
E.B. & W.B. ROADWAY
SCALE 3/8" = 1'-0"

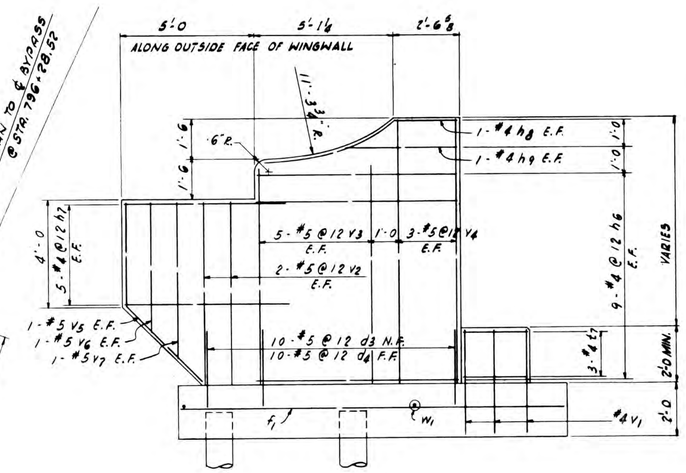

ELEVATION "B-B"
SCALE 3/8" = 1'-0

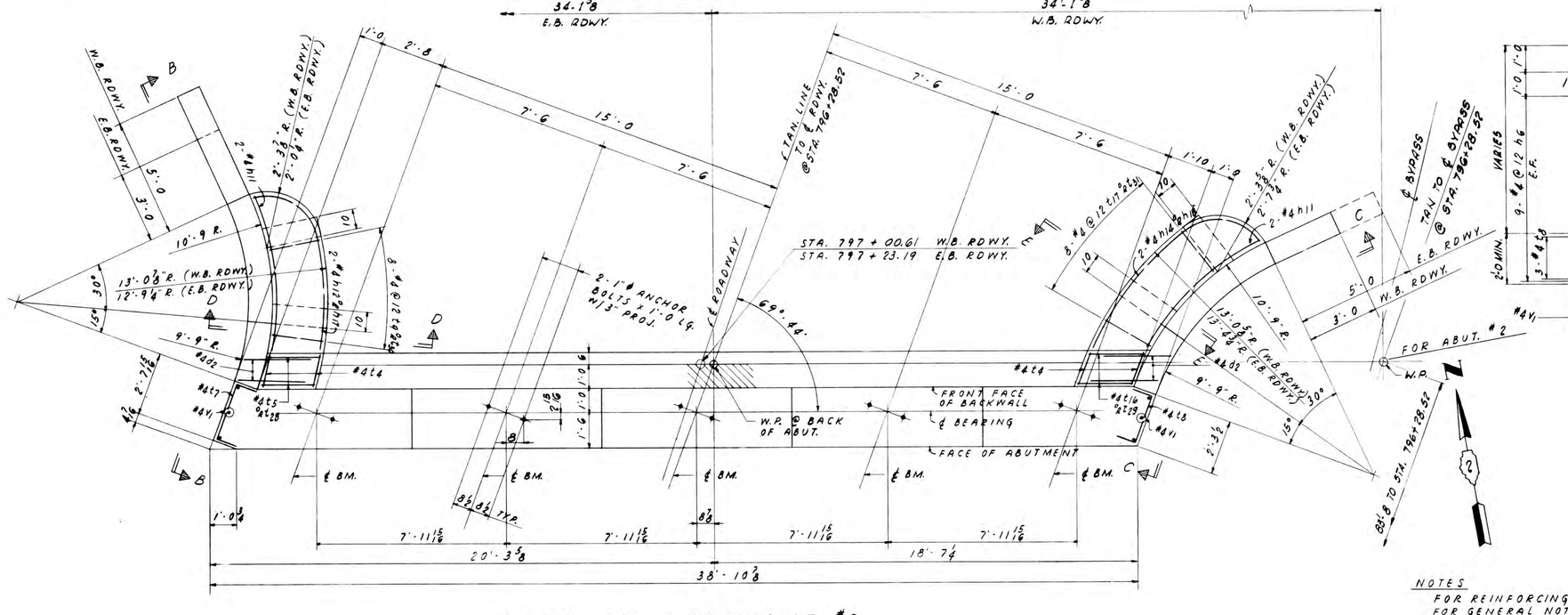

PLAN OF ABUTMENT #2
E.B. & W.B. ROADWAY
SCALE 3/8" = 1'-0"

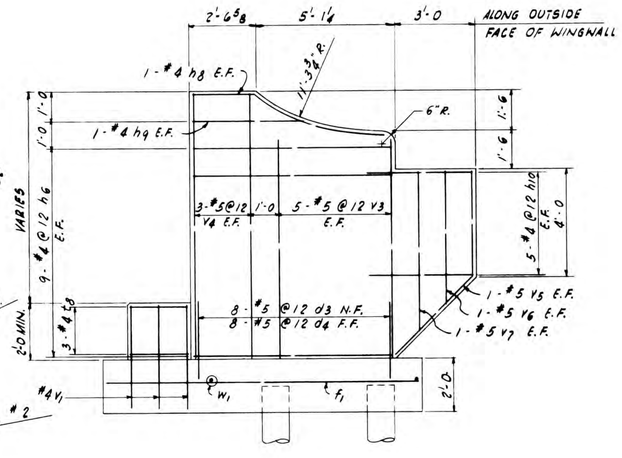

ELEVATION "C-C"
SCALE 3/8" = 1'-0

NOTES
FOR REINFORCING SCHEDULE SEE SHTS. # 14 & 15
FOR GENERAL NOTES SEE SHT. # 2

WORK THIS DWG. WITH SHEETS 6 & 8

ILLINOIS DIVISION OF HIGHWAYS
ROCKFORD BYPASS
F.A. ROUTE 194
PROJECT _____ SECTION 4-VB
WINNEBAGO COUNTY

ABUTMENTS - PLANS

Designed By: L.W.	Drawn By: L. W.	Quantities By:
Checked By:	Checked By:	Checked By:

ROUTE NO.	SECTION	COUNTY	TOTAL SHEETS	SHEET NO.
F.A.194	4-VB	WINN.	27	8
STA.		TO STA.		
FED. ROAD DIST. NO. 7	ILLINOIS		PROJ.	

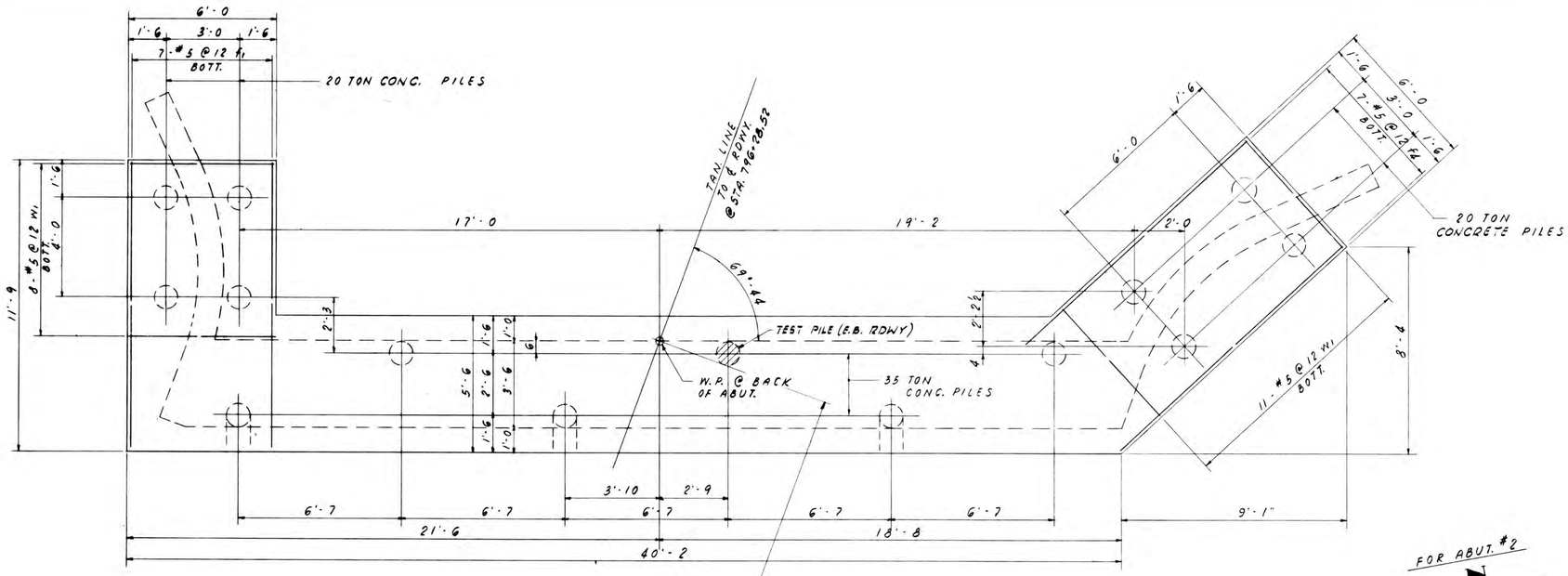

FOOTING PLAN
ABUTMENT #1 - W.B. ROADWAY
ABUTMENT #2 - E.B. ROADWAY
SCALE 3/8" = 1'-0

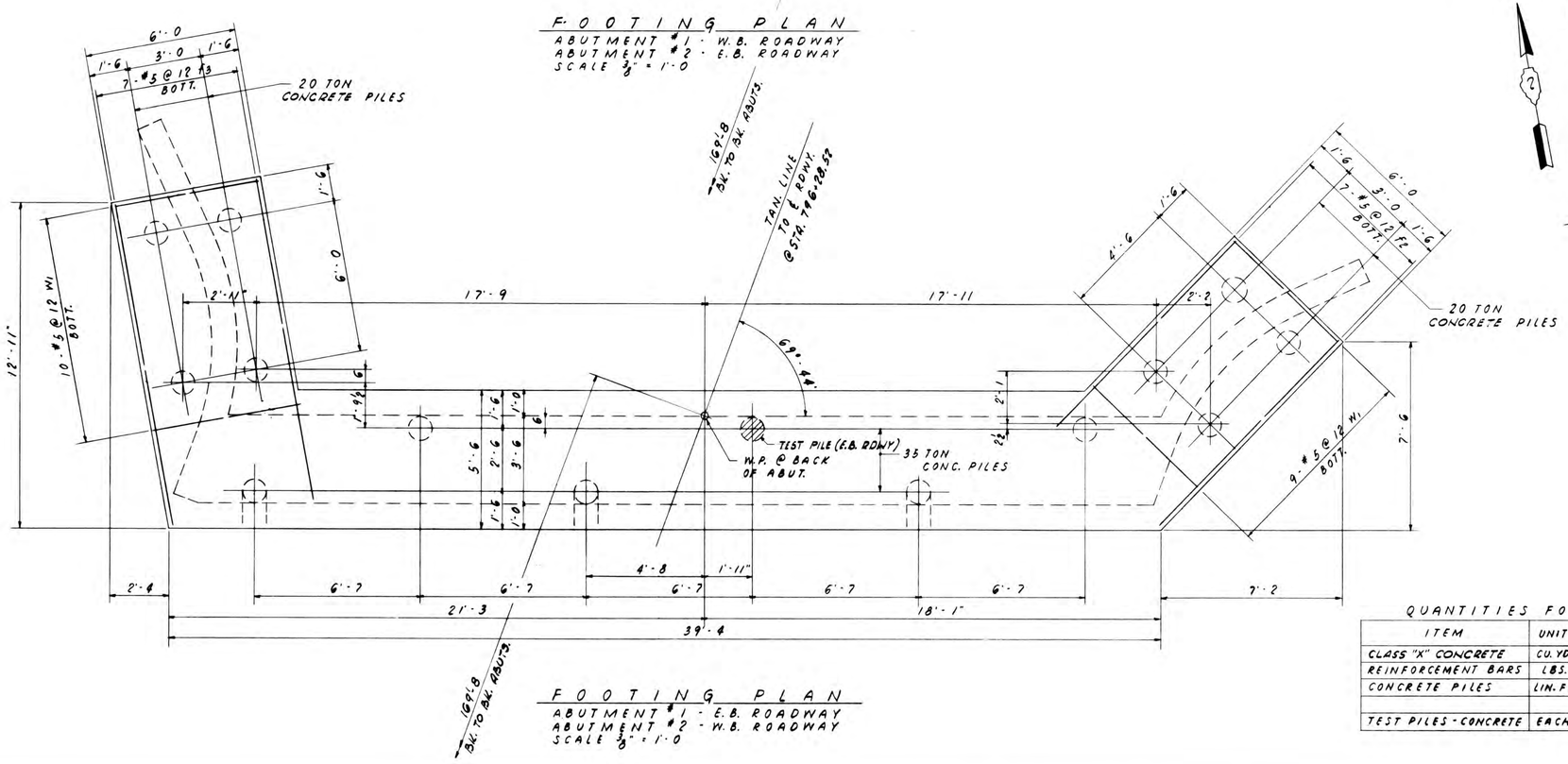

FOOTING PLAN
ABUTMENT #1 - E.B. ROADWAY
ABUTMENT #2 - W.B. ROADWAY
SCALE 3/8" = 1'-0

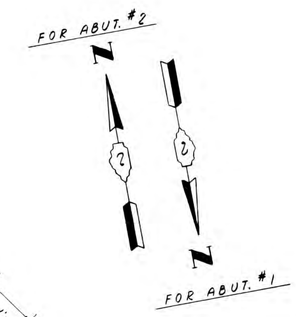

PILE DATA

ABUTMENTS
35 TON CONCRETE PILES
ESTIMATED LENGTH 35 FT.
NUMBER REQ'D. 24 *

WING WALLS * Including 2 test piles
20 TON CONCRETE PILES
ESTIMATED LENGTH 30 FT.
NUMBER REQ'D. 32

QUANTITIES FOR ABUTMENTS

ITEM	UNIT	TOTAL E.B. RDWY.	TOTAL W.B. RDWY.
CLASS "X" CONCRETE	CU. YDS.	100.8	100.8
REINFORCEMENT BARS	LBS.	6,963	6,946
CONCRETE PILES	LIN. FT.	865	865
TEST PILES - CONCRETE	EACH	1	1

WORK THIS DWG. WITH SHEETS 6 & 7

ILLINOIS DIVISION OF HIGHWAYS
ROCKFORD BYPASS
F. A. ROUTE 194
PROJECT _____ SECTION 4-VB
WINNEBAGO COUNTY

ABUTMENTS - FOOTINGS

Designed By: L.W.	Drawn By: L.W.	Quantities By:
Checked By:	Checked By:	Checked By:

ROUTE NO.	SECTION	COUNTY	TOTAL SHEETS	SHEET NO.
F.A. 194	4-VB (VF)	WINN.	27	9 (5)
STA.	TO STA.			
FED. ROAD DIST. NO. 7	ILLINOIS			

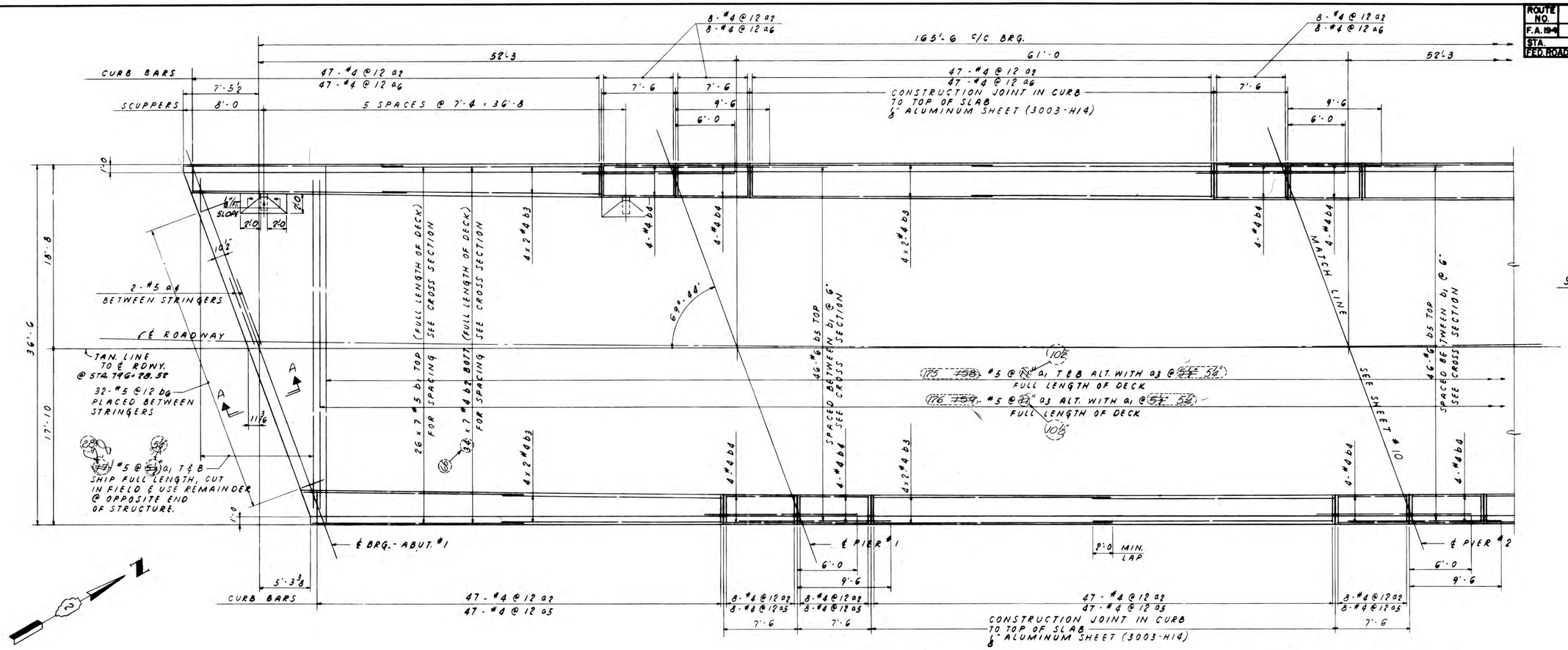

REINFORCING PLAN

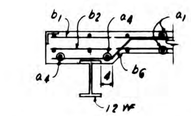

SECTION "A-A"

BARS DESIGNATED b3, b4 & b6 SHALL NOT PASS THRU CONSTRUCTION JOINTS.

BARS DESIGNATED 24 x 7 - #5 BARS INDICATES THAT THERE ARE 24 ROWS & EACH ROW CONTAINS 7 LENGTHS OF BARS.

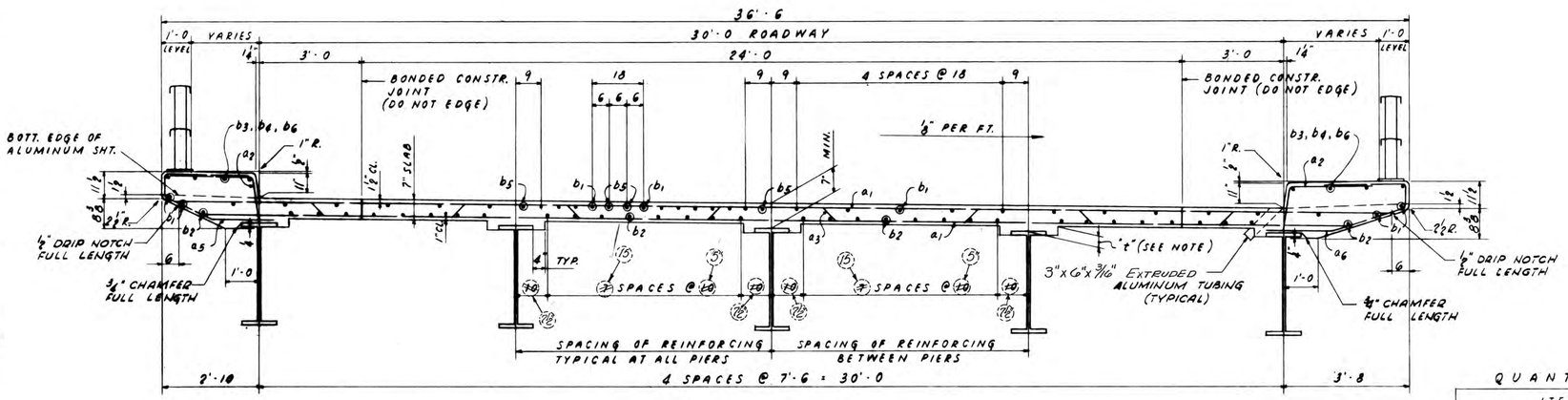

TYPICAL CROSS SECTION

NOTES

FOR GENERAL NOTES SEE SH. # 2
METHOD OF DETERMINING FILLET HEIGHTS "t"
AFTER ALL STRUCTURAL STEEL HAS BEEN ERECTED ELEVATIONS OF THE TOP FLANGES OF THE BEAMS SHALL BE TAKEN AT INTERVALS NOT TO EXCEED 10 FEET. FROM THESE ELEVATIONS SUBTRACT THE INCREMENT OF DEFLECTION FOR THESE POINTS, DETERMINED FROM THE D.L. DEFLECTION DIAGRAM. THE ELEVATIONS SO ATTAINED SUBTRACTED FROM THE THEORETICAL GRADE ELEVATIONS, MINUS SLAB THICKNESS, EQUALS THE FILLET HEIGHTS ABOVE TOP OF BEAM.
FOR HANDRAIL DETAILS SEE SH. # 13
FOR REINFORCING SCHEDULE SEE SH. # 14 & 15

QUANTITIES FOR DECKS

ITEM	UNIT	TOTALS	
		E.B. RDWY.	W.B. RDWY.
CLASS "X" CONCRETE	CU. YDS.	176.4	176.4
REINFORCEMENT BARS	LBS.	~~32,940~~	~~32,940~~
STRUCTURAL STEEL	LBS.	165,433	165,433
		39420	

WORK THIS DWG. WITH SHEET 10

ILLINOIS DIVISION OF HIGHWAYS
ROCKFORD BYPASS
F.A. ROUTE 194
PROJECT _____ SECTION 4-VB
WINNEBAGO COUNTY

DECK PLAN - PART I

Designed By: L.P.	Drawn By: L.W.	Quantities By:
Checked By:	Checked By:	Checked By:

Revised 5/1/62 Distribution steel in bottom slab increased to 67%. - Typical spacing of main beams changed. Quantity of reinf. bars increased. Rev. 2

ROUTE NO.	SECTION	COUNTY	TOTAL SHEETS	SHEET NO.
F.A.194	4-VB(VF)	WINN.	27	10(6)
STA.		TO STA.		
FED. ROAD DIST. NO. 7	ILLINOIS		PROJ.	

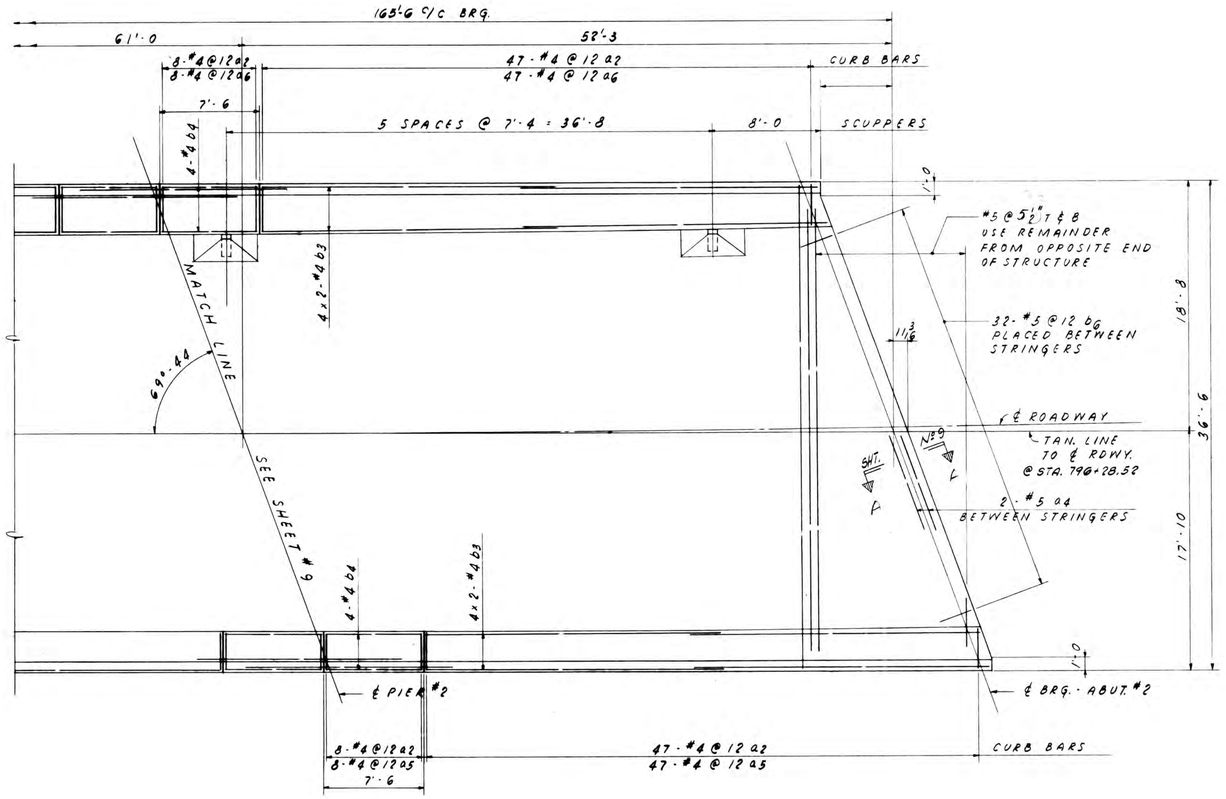

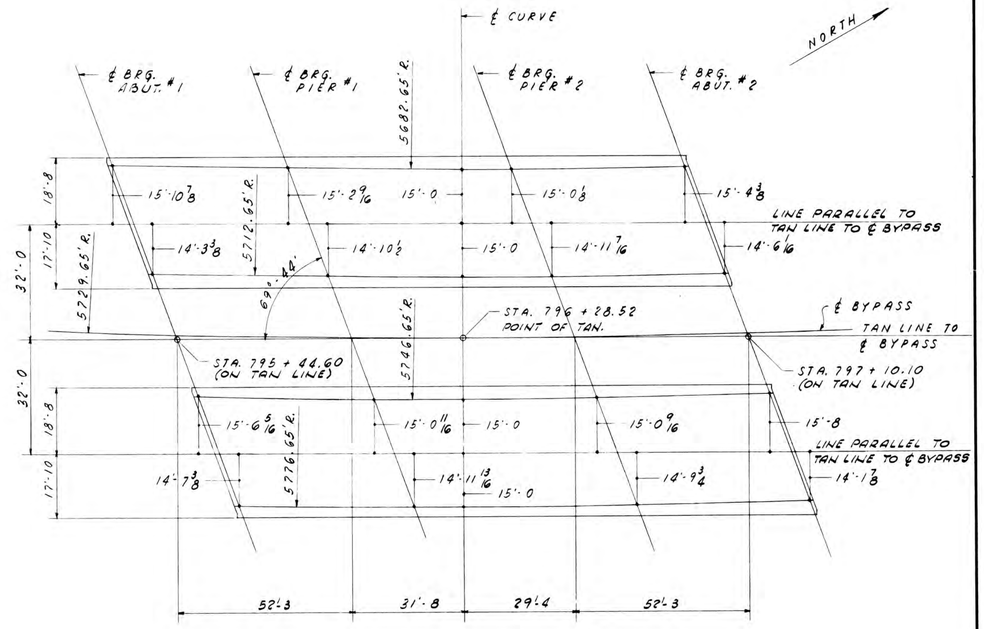

KEY PLAN
FOR CURB OFFSETS

WORK THIS DWG. WITH SHEET 9

ILLINOIS DIVISION OF HIGHWAYS
ROCKFORD BYPASS

F.A. ROUTE 194

PROJECT _____ SECTION 4-VB

WINNEBAGO COUNTY

DECK PLAN - PART 2

Designed By: L.P.	Drawn By: L.W.	Quantities By:
Checked By:	Checked By:	Checked By:

ROUTE NO.	SECTION	COUNTY	TOTAL SHEETS	SHEET NO.
F.A. 194	4VB(4VF)	WINN.	27(8)	11 (7)
STA.		TO STA.		
FED. ROAD DIST. NO. 7	ILLINOIS			

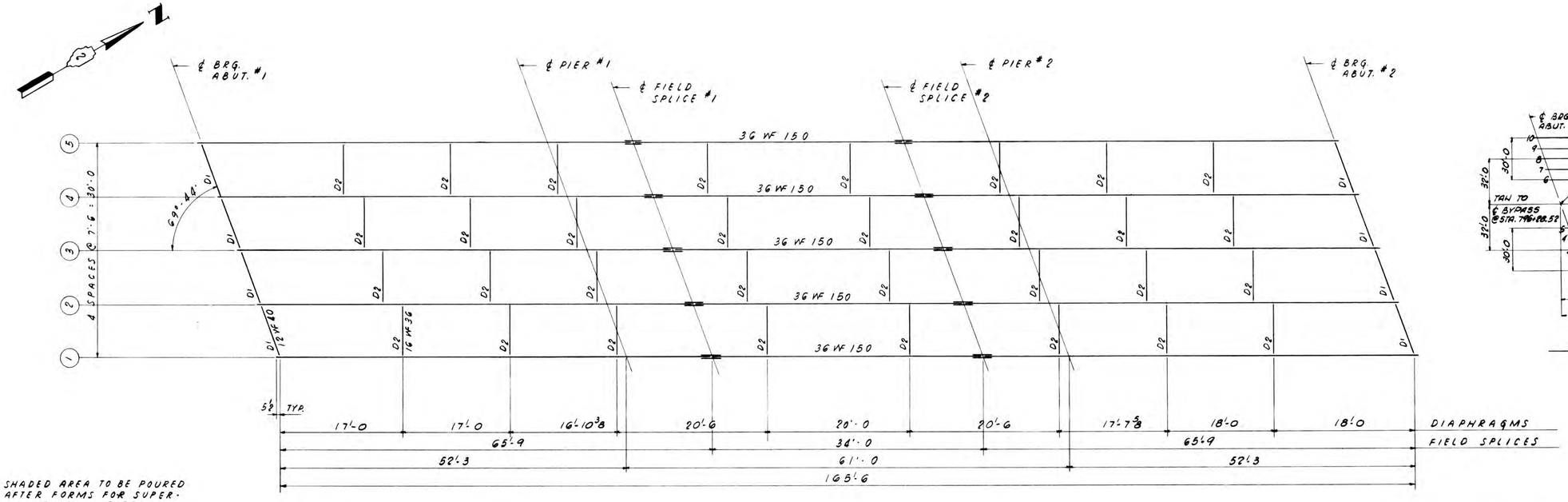

FRAMING PLAN

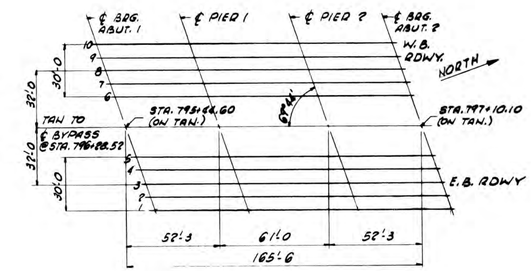

KEY FRAMING PLAN

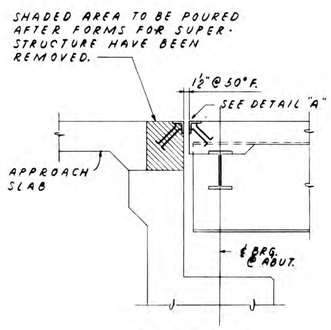

SECTION

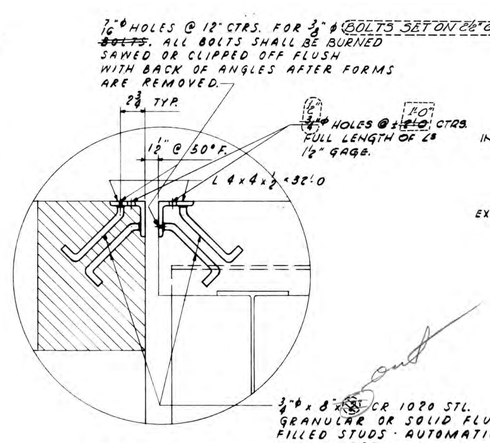

DETAIL "A"

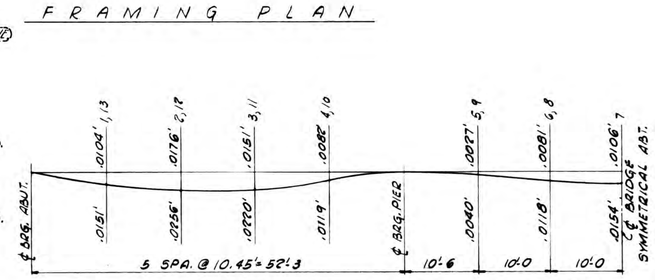

DEAD LOAD DEFLECTION DIAGRAM FOR CONC. ONLY

NOTE: THE ABOVE DEFLECTIONS ARE NOT FOR USE IN THE FIELD IF THE ENGINEER IS WORKING FROM THE THEORETICAL T/SLAB ELEVATIONS ADJUSTED FOR DEAD LOAD DEFLECTION.

ELEVATIONS

BEAM No	LOCATION	℄ BRG. ABUT. 1	℄ BRG. PIER 1	FIELD SPLICE 1	FIELD SPLICE 2	℄ BRG. PIER 2	℄ BRG. ABUT. 2
10	TOP OF SLAB	797.47	797.15	797.06	796.83	796.74	796.40
	TOP OF BEAM	796.88	796.52	796.43	796.20	796.12	795.82
9	TOP OF SLAB	797.53	797.20	797.11	796.89	796.80	796.46
	TOP OF BEAM	796.94	796.58	796.49	796.26	796.18	795.87
8	TOP OF SLAB	797.58	797.26	797.17	796.95	796.86	796.51
	TOP OF BEAM	797.00	796.64	796.55	796.32	796.24	795.93
7	TOP OF SLAB	797.64	797.32	797.23	797.00	796.91	796.57
	TOP OF BEAM	797.06	796.70	796.60	796.38	796.30	795.99
6	TOP OF SLAB	797.70	797.37	797.29	797.06	796.97	796.65
	TOP OF BEAM	797.12	796.75	796.65	796.43	796.35	796.04
5	TOP OF SLAB	797.32	796.99	796.91	796.68	796.59	796.25
	TOP OF BEAM	796.74	796.37	796.28	796.04	795.97	795.67
4	TOP OF SLAB	797.38	797.05	796.96	796.73	796.65	796.31
	TOP OF BEAM	796.80	796.43	796.33	796.11	796.03	795.73
3	TOP OF SLAB	797.44	797.10	797.01	796.79	796.70	796.37
	TOP OF BEAM	796.85	796.48	796.39	796.17	796.09	795.78
2	TOP OF SLAB	797.50	797.16	797.07	796.85	796.76	796.42
	TOP OF BEAM	796.91	796.55	796.45	796.22	796.14	795.84
1	TOP OF SLAB	797.55	797.22	797.13	796.90	796.82	796.68
	TOP OF BEAM	796.97	796.59	796.49	796.27	796.19	795.90

THEORETICAL TOP OF SLAB ELEVATIONS

BEAM	LOCATION	SPAN 1: 1	2	3	4	SPAN 2: 5	6	7	8	9
1	ELEVATION	797.487	797.621	797.353	797.284	797.147	797.081	797.016	796.951	796.886
	ELEV. ADJ. FOR D.L. DEFL.	797.502	797.646	797.375	797.296	797.151	797.093	797.031	796.963	796.890
2	ELEVATION	797.430	797.564	797.296	797.228	797.090	797.024	796.959	796.894	796.829
	ELEV. ADJ. FOR D.L. DEFL.	797.440	797.581	797.312	797.236	797.093	797.032	796.970	796.902	796.831
3	ELEVATION	797.373	797.307	797.240	797.171	797.033	796.968	796.908	796.837	796.771
	ELEV. ADJ. FOR D.L. DEFL.	797.383	797.324	797.255	797.180	797.036	796.976	796.913	796.845	796.774
4	ELEVATION	797.315	797.250	797.183	797.115	796.977	796.911	796.845	796.780	796.716
	ELEV. ADJ. FOR D.L. DEFL.	797.326	797.267	797.198	797.123	796.979	796.919	796.856	796.788	796.717
5	ELEVATION	797.258	797.193	797.126	797.058	796.920	796.854	796.788	796.723	796.657
	ELEV. ADJ. FOR D.L. DEFL.	797.273	797.218	797.148	797.070	796.924	796.866	796.806	796.734	796.661
6	ELEVATION	797.638	797.574	797.508	797.442	797.304	797.238	797.171	797.106	797.039
	ELEV. ADJ. FOR D.L. DEFL.	797.653	797.599	797.530	797.453	797.308	797.249	797.187	797.117	797.043
7	ELEVATION	797.580	797.516	797.451	797.385	797.248	797.181	797.115	797.048	796.982
	ELEV. ADJ. FOR D.L. DEFL.	797.590	797.534	797.466	797.393	797.251	797.189	797.125	797.056	796.985
8	ELEVATION	797.523	797.459	797.394	797.328	797.192	797.125	797.058	796.992	796.925
	ELEV. ADJ. FOR D.L. DEFL.	797.533	797.476	797.409	797.336	797.194	797.133	797.069	797.000	796.928
9	ELEVATION	797.465	797.402	797.337	797.271	797.135	797.069	797.002	796.935	796.869
	ELEV. ADJ. FOR D.L. DEFL.	797.475	797.419	797.352	797.279	797.138	797.077	797.012	796.943	796.871
10	ELEVATION	797.407	797.344	797.280	797.214	797.079	797.015	796.948	796.879	796.815
	ELEV. ADJ. FOR D.L. DEFL.	797.422	797.370	797.302	797.226	797.083	797.026	796.961	796.890	796.816

BEAM	LOCATION	SPAN 3: 10	11	12	13
1	ELEVATION	796.751	796.683	796.616	796.549
	ELEV. ADJ. FOR D.L. DEFL.	796.769	796.705	796.642	796.566
2	ELEVATION	796.693	796.625	796.558	796.491
	ELEV. ADJ. FOR D.L. DEFL.	796.701	796.640	796.576	796.502
3	ELEVATION	796.635	796.568	796.501	796.433
	ELEV. ADJ. FOR D.L. DEFL.	796.646	796.583	796.518	796.444
4	ELEVATION	796.578	796.510	796.443	796.376
	ELEV. ADJ. FOR D.L. DEFL.	796.586	796.525	796.461	796.386
5	ELEVATION	796.521	796.453	796.385	796.318
	ELEV. ADJ. FOR D.L. DEFL.	796.533	796.475	796.411	796.333
6	ELEVATION	796.901	796.832	796.764	796.696
	ELEV. ADJ. FOR D.L. DEFL.	796.913	796.854	796.790	796.711
7	ELEVATION	796.864	796.795	796.727	796.659
	ELEV. ADJ. FOR D.L. DEFL.	796.852	796.790	796.725	796.649
8	ELEVATION	796.787	796.718	796.649	796.581
	ELEV. ADJ. FOR D.L. DEFL.	796.795	796.733	796.667	796.592
9	ELEVATION	796.730	796.661	796.592	796.524
	ELEV. ADJ. FOR D.L. DEFL.	796.738	796.676	796.610	796.534
10	ELEVATION	796.673	796.604	796.535	796.467
	ELEV. ADJ. FOR D.L. DEFL.	796.685	796.626	796.561	796.482

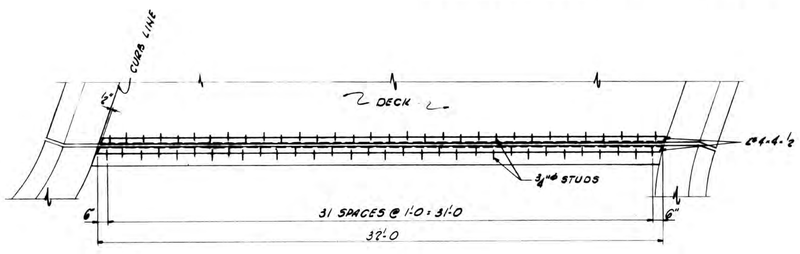

PLAN

EXPANSION JOINT DETAIL

Rev. 3/16/62 In Detail A Exp. Dev.
E.A.Z.

ILLINOIS DIVISION OF HIGHWAYS
ROCKFORD BYPASS
F.A. ROUTE 194
PROJECT _____ SECTION 4-VB
WINNEBAGO COUNTY

FRAMING PLAN

Designed By: L.P.	Drawn By: L.W.	Quantities By:
Checked By: 8/21/62	Checked By: 8/21/62	Checked By:

ROUTE NO.	SEC.	COUNTY	TOTAL SHEETS	SHEET NO.
F.A. 194	4 VB (4 VF)	WINN.	27 (8)	13 (8)
STA.		TO STA.		
FED. ROAD DIST. NO. 7	ILLINOIS	PROJ.		

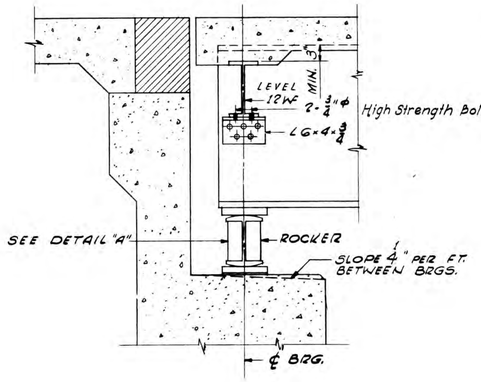

SECTION AT ABUTMENT

PINTLE DETAIL

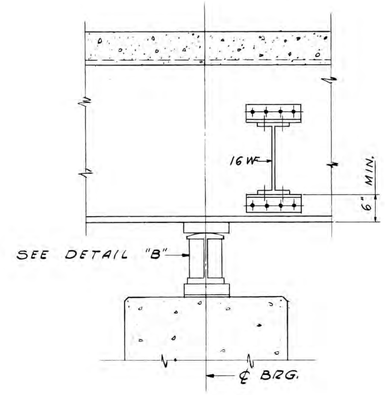

SECTION AT FIXED PIER

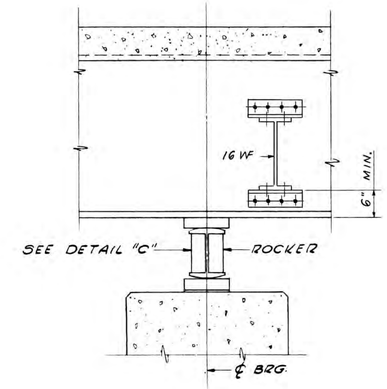

SECTION AT EXPANSION PIER

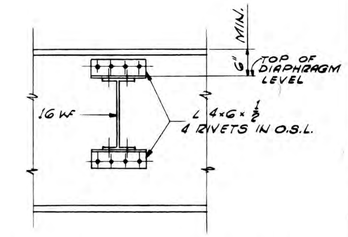

INTERIOR DIAPHRAGM

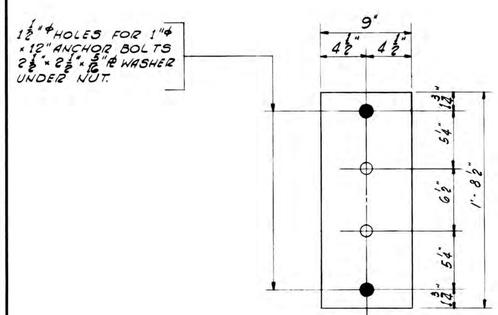

PLAN

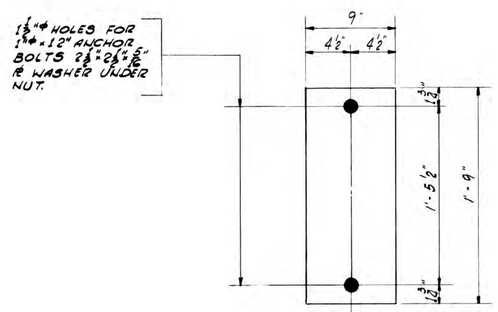

PLAN

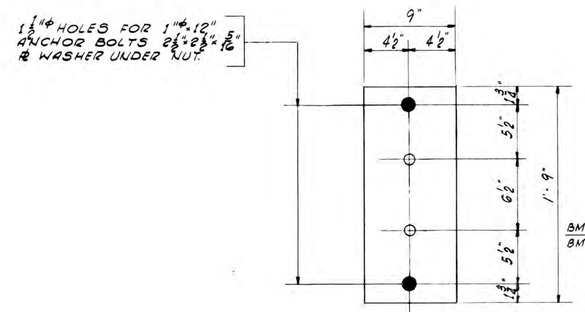

PLAN

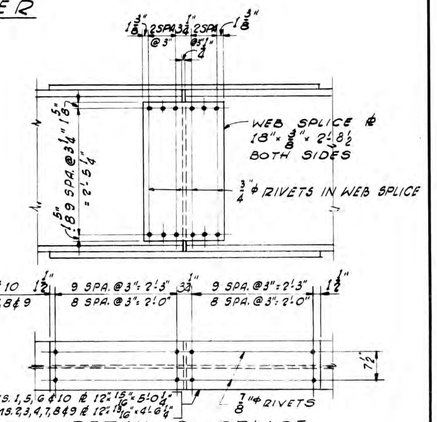

DETAIL OF SPLICE

NOTE A

1 3/8"φ HOLES IN TOP ℞ FOR 1 1/4"φ PINTLES

1 1/4"φ PINTLES - THREAD OR PRESS FIT IN ROCKER.

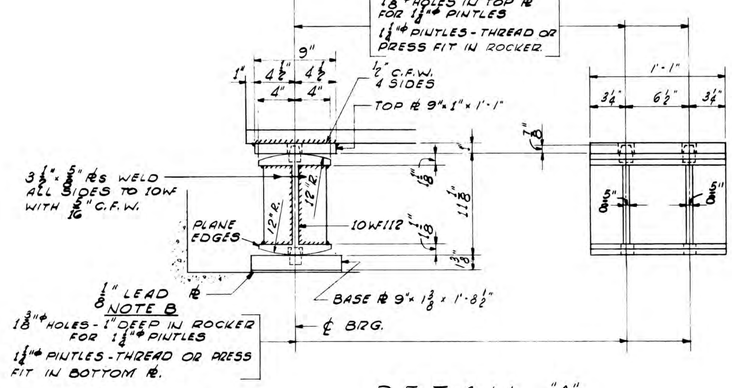

NOTE B

1 3/8"φ HOLES - 1" DEEP IN ROCKER FOR 1 1/4"φ PINTLES

1 1/4"φ PINTLES - THREAD OR PRESS FIT IN BOTTOM ℞.

DETAIL "A"

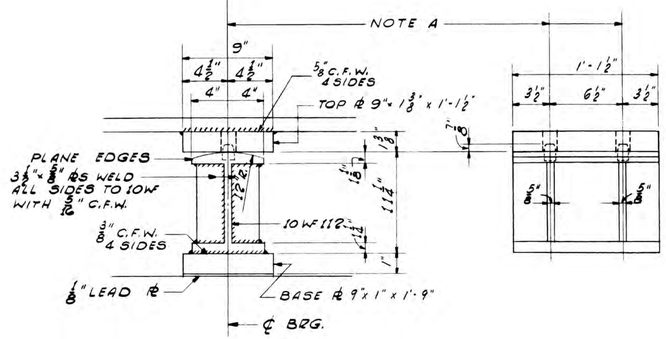

DETAIL "B"

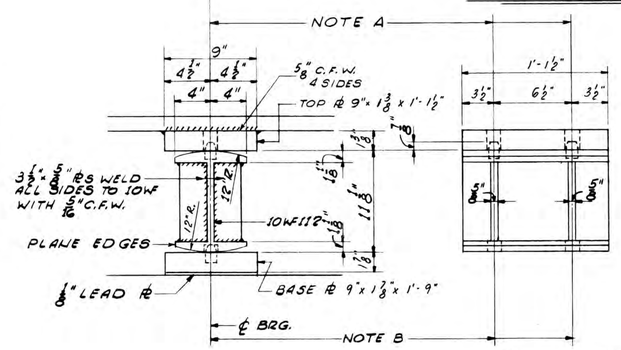

DETAIL "C"

LOC. \ BEAM	1	3	6	7	8
ABUT. 1	5/8"		1/2"		
ABUT. 2			1/2"	5/8"	
PIER 1	1/2"	3/4"	1/2"		5/8"
PIER 2	1/2"	5/8"	1/2"		3/4"

SHIM PLATES ARE TO HAVE SAME LENGTH, WIDTH AND BOLT HOLE LOCATIONS AS BEARING BASE PLATES.

ILLINOIS DIVISION OF HIGHWAYS
ROCKFORD BYPASS

F. A. ROUTE 194

PROJECT _____ SECTION 4-VB

WINNEBAGO COUNTY

STEEL DETAILS

Designed By: J.R.M.C. | Drawn By: J.R.M.C. | Checked By: [illegible]

NORTHWESTERN NO. 127R DRAFTEX

ROUTE NO.	SEC.	COUNTY	TOTAL SHEETS	SHEET NO.
F.A. 194	4-VB	WINN.	27	13
STA.		TO STA.		
FED. ROAD DIST. NO. 7	ILLINOIS		PROJ.	

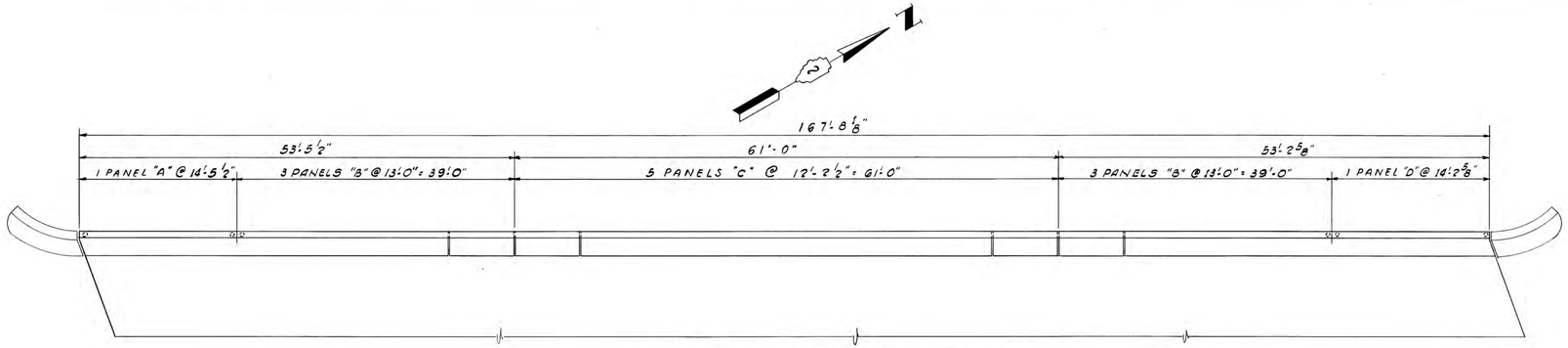

PLAN - WEST RAIL

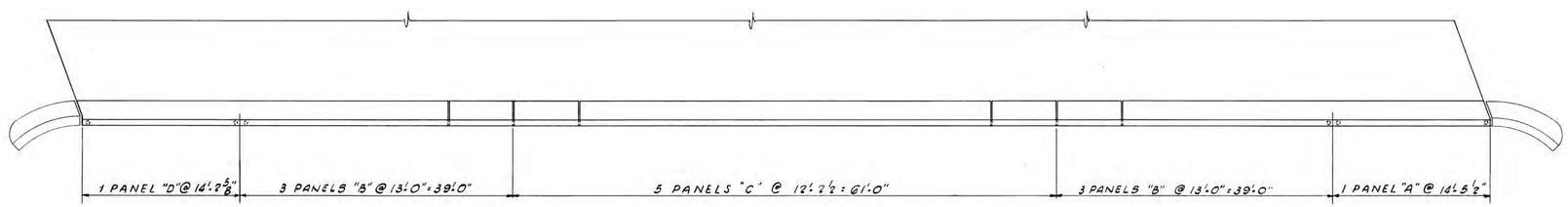

PLAN - EAST RAIL

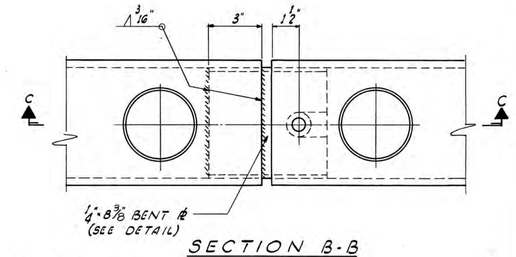

SECTION B-B

3/4"Φ x 1 3/4" GRANULAR OR SOLID FLUX FILLED STUD. THREADED FULL LENGTH - AUTOMATICALLY END WELDED OR 3/4"Φ x 1 3/4" FULLY THREADED STUD WELDED WITH 1/8" C.F.W. PROVIDE WASHER AND LOCKNUT.

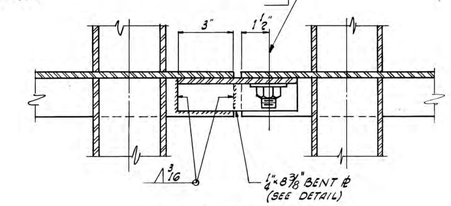

SECTION C-C

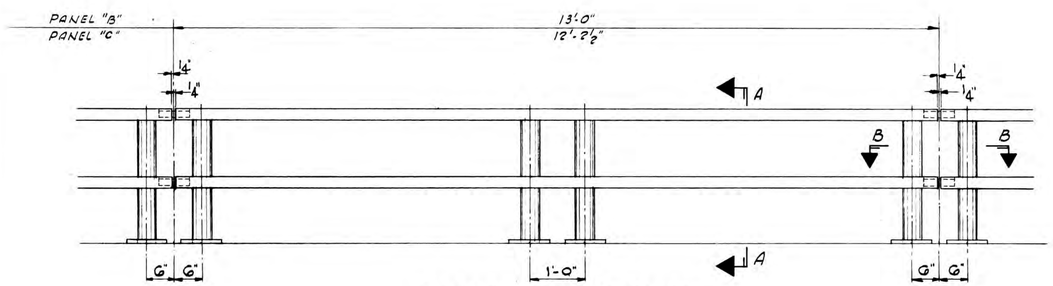

ELEVATION - TYR PANEL

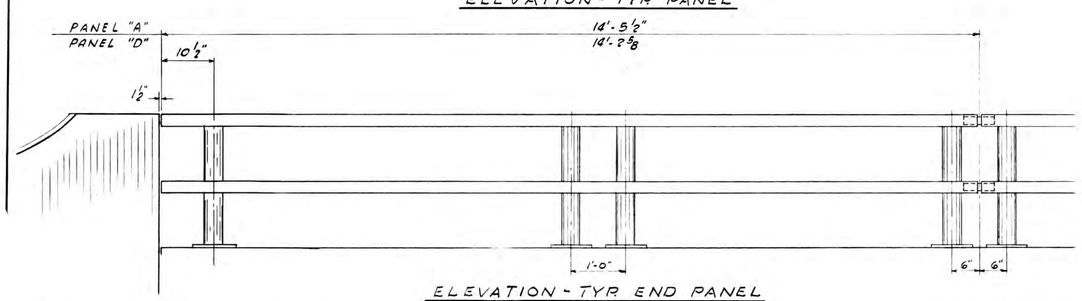

ELEVATION - TYR END PANEL

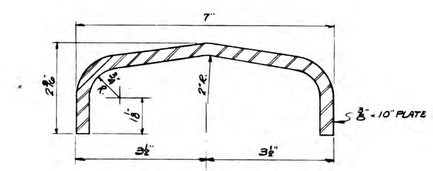

DETAIL OF RAIL

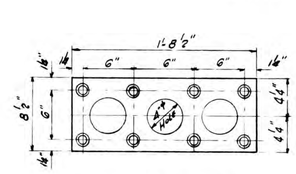

ANCHOR DEVICE
AT DOUBLE POSTS

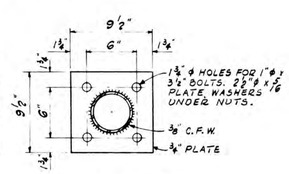

BASE PLATE
ALL POSTS - SUPERSTRUCTURE

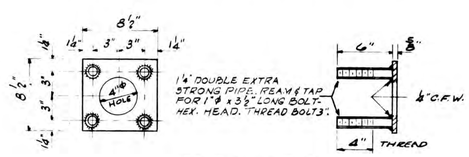

ANCHOR DEVICE
AT SINGLE POST

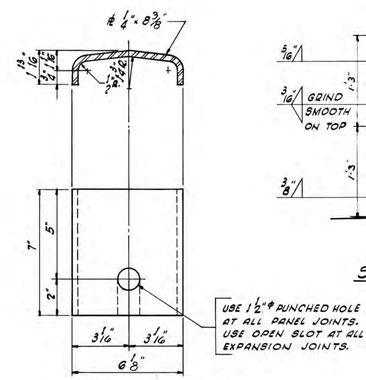

DETAIL OF 1/4" BENT PL

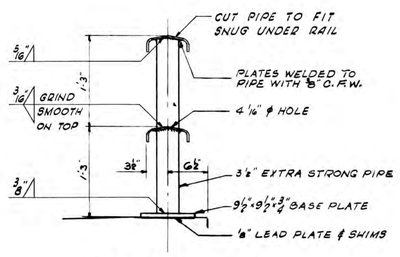

SECTION A-A

BILL OF MATERIAL

METAL HANDRAIL	LIN. FT.	671

ILLINOIS DIVISION OF HIGHWAYS
ROCKFORD BYPASS

F. A. ROUTE 194

PROJECT _____ SECTION 4-VB

WINNEBAGO COUNTY

HANDRAIL DETAILS

Designed By J.R.McC. Drawn By L.W. Checked By JMB

Bench Mark: B.M. Chisled " □" N.E. wingwall of W.B. Structure #101-0068 Elev. 796.83

Existing Structure: #101-0067 & #101-0068 are 169'-8" Bk. to Bk. of Abutments with a 36'-6" Out to Out of Deck. Built as F.A. Rte. 194, Section 4-VB at Sta. 796+28.52 in 1963. The traffic shall be maintained during the rehabilitation of the existing structures utilizing stage construction.

STATE OF ILLINOIS
DEPARTMENT OF TRANSPORTATION

ROUTE NO.	SECTION	COUNTY	TOTAL SHEETS	SHEET NO.
F.A.I. 39	4VBY	WINNEBAGO	171	52
FED. ROAD DIST. NO. 7	ILLINOIS	FED. AID PROJECT-		

SHEET NO. 1
28 SHEETS

CURVE DATA

P.I. Sta. = 786+35.79

Δ = 50°-41'-00"
D = 1° 00' 00"
T = 2713.50'
L = 5068.33'
E = 610.04'
R = 5729.65'
S.E. =0.015'

Attain Full Superelevation
Sta. 757+72.29 to Sta. 759+97.29
Full Superelevation
Sta. 759+97.29 to Sta. 809+15.62

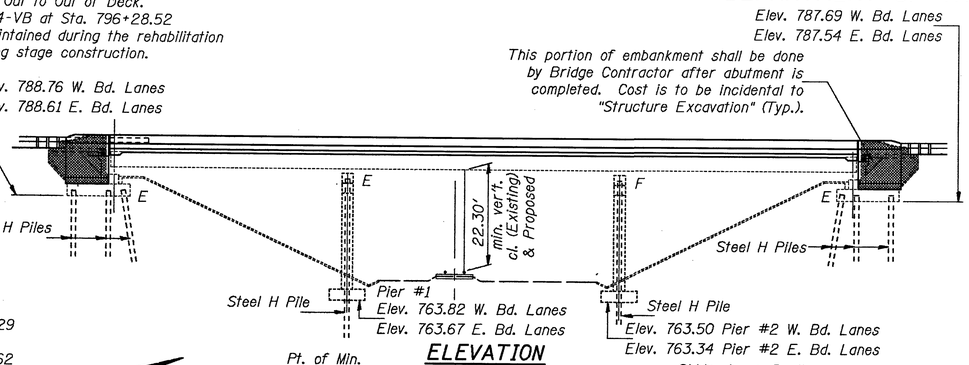

ELEVATION

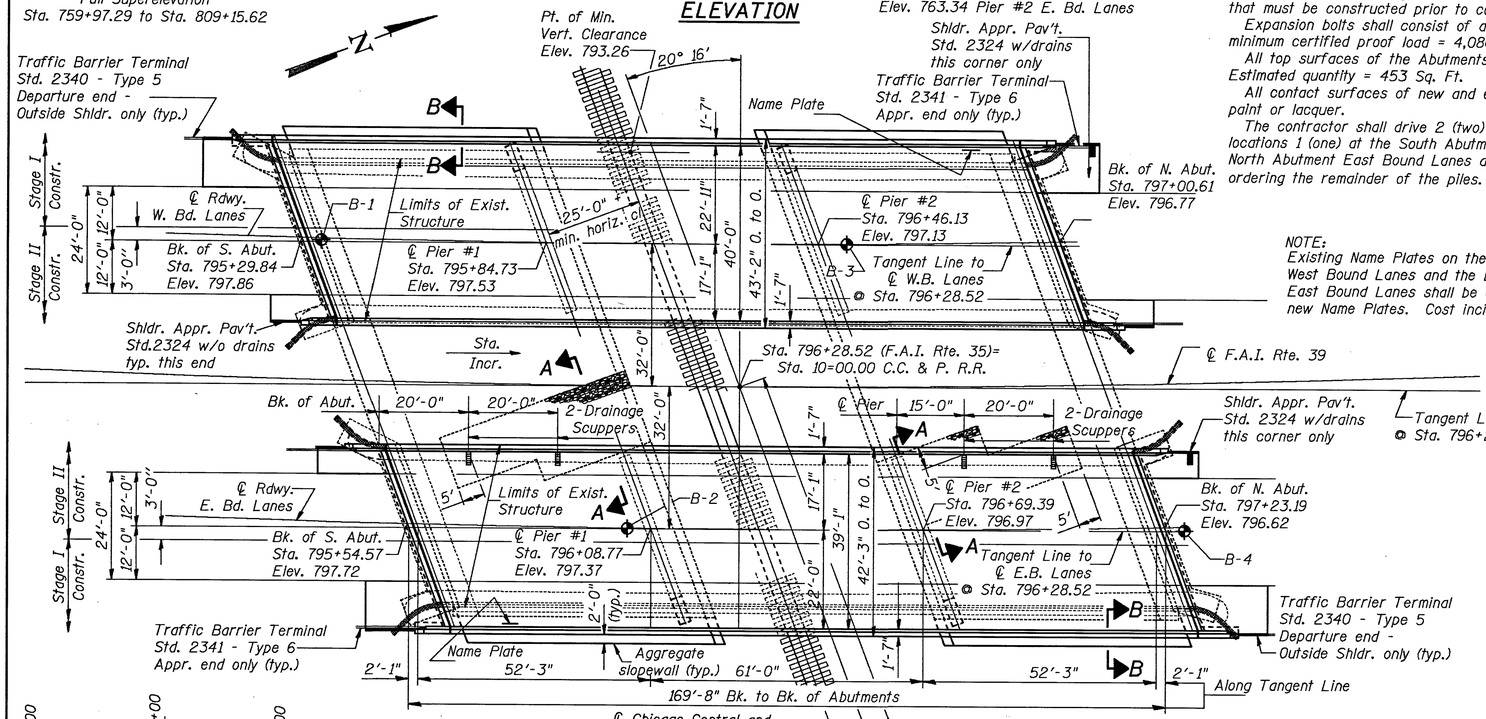

PLAN

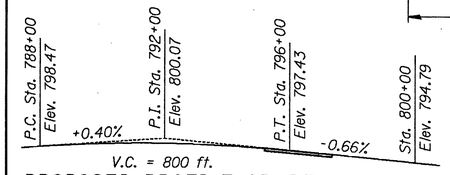

PROPOSED PROFILE GRADE
(Top 3¼" Bit. Conc. overlay)
F.A.I. Rte. 39

See Proposal for Boring Data.

Fasteners shall be high strength bolts . Bolts $\frac{3}{4}$"ϕ, open holes $\frac{13}{16}$"ϕ, unless otherwise noted.

Calculated weight of Structural Steel = 67,620 Lbs.

Field welding of construction accessories will not be permitted to the bottom flange of beams nor to the top flange for a distance equal to one-fourth the span length each way from the pier supports. Field welding in other areas will be permitted only when approved by the Engineer.

Anchor bolts shall be set before bolting diaphragms over supports.

The main load carrying member components subject to tensile stress shall conform to the Supplemental Requirements for Notch Toughness Zone 2. These Components are the wide flange beams and all splice plate material of the wide flange beams.

Reinforcement bars shall conform to the requirements of AASHTO M-31, M-42 or M-53 Grade 60.

The embankment configuration shown shall be the minimum embankment that must be constructed prior to construction of the abutments.

Expansion bolts shall consist of approved expansion anchors, providing minimum certified proof load = 4,080 lbs., and $\frac{3}{4}$"ϕ x 12" hooked bolts.

All top surfaces of the Abutments shall receive "Bridge Seat Sealer". Estimated quantity = 453 Sq. Ft.

All contact surfaces of new and existing structure shall be free of paint or lacquer.

The contractor shall drive 2 (two) Steel HP10x42 test piles in a permanent locations 1 (one) at the South Abutment West Bound Lanes and 1 (one) at the North Abutment East Bound Lanes as directed by the Engineer before ordering the remainder of the piles.

GENERAL NOTES

Plan dimensions and details relative to existing structure have been taken from existing plans and are subject to nominal construction variations. It shall be the Contractor's responsibility to verify such dimensions and details in the field and make necessary approved adjustments prior to construction or ordering of materials. Such variations shall not be cause for additional compensation for a change in the scope of the work, however, the Contractor will be paid for the quantity actually furnished at the unit price bid for the work.

Bearing seat surfaces shall be constructed or adjusted to the designated elevations within a tolerance of $\frac{1}{8}$ inch. Adjustment shall be made either by grinding the surface or by shimming the bearing. Two $\frac{1}{8}$" adjusting shims, of the dimensions of the bottom bearing plate, shall be provided for each bearing in addition to all other plates or shims.

All existing structural steel shall be cleaned by Method I. The three coat lead and chromate free alkyd paint system shall be used for the field painting of the Existing Structural Steel. The color of the final finish coat shall be Munsell Standard 7.5G 4/8 Interstate Green.

The three coat lead and chromate free alkyd paint system shall be used for shop and field painting of the New Structural Steel. The color of the final finish coat shall be Munsell Standard 7.5G 4/8 Interstate Green.

The Contractor will be required to mark, on top of the concrete deck, the locations of the top flange of all the steel beams, prior to any removal of the bridge concrete deck. Saw cutting directly over the top of the beam flanges is not permitted.

The estimated weight of the existing Structural Steel to be cleaned and painted = 156 Tons.

NOTE:
Existing Name Plates on the West Wing of the North Abutment West Bound Lanes and the East Wing of the South Abutment East Bound Lanes shall be cleaned and relocated next to the new Name Plates. Cost incidental to "Name Plates".

STATION 796+28.52
REBUILT 199 BY
STATE OF ILLINOIS
F.A.I. RT. 39 SEC. 4VBY
F.A. PROJ.
LOADING HS20 & ALT.
STR. NO. 101-0067

NAME PLATE
(East Bound Lanes)
See Std. 2113

STATION 796+28.52
REBUILT 199 BY
STATE OF ILLINOIS
F.A.I. RT. 39 SEC. 4VBY
F.A. PROJ.
LOADING HS20 & ALT.
STR. NO. 101-0068

NAME PLATE
(West Bound Lanes)
See Std. 2113

TOTAL BILL OF MATERIAL

ITEM	UNIT	SUPER	SUB	TOTAL
Concrete Removal	Cu. Yd.		~~64~~ 54	~~64~~ 54
Expansion Bolts $\frac{3}{4}$"ϕ	Each		~~692~~ 444	~~692~~ 444
Removal of Existing Concrete Deck	Each	2		2
Structure Excavation	Cu. Yd.		168	168
Class X Concrete Superstructure	Cu. Yd.	~~441.0~~ 449.22		~~441.0~~ 449.22
Protective Coat	Sq. Yd.	273		273
Elastomeric Bearing Assembly Type I	Each	12		12
Elastomeric Bearing Assembly Type II	Each	12		12
Class X Concrete	Cu. Yd.	203.8		203.8
Structural Steel	L.S.			L.S.
Stud Shear Connectors	Each	5,880		5,880
Cleaning and Painting Steel Bridge	L.S.			L.S.
Reinforcement Bars, Epoxy Coated	Pound	110,560	17,690	128,250
Steel Piles HP10 x 42	Lin. Ft.	~~556~~ 581		~~556~~ 581
Test Pile Steel HP10x42	Each		2	2
Name Plates	Each	2		2
Stone Dumped Riprap Class (A-3)	Sq. Yd.		~~371~~ 126	~~371~~ 126
Bridge Seat Sealer	L.S.			L.S.
Drainage Scuppers	Each	4		4
Neoprene Expansion Joint 2"	Lin. Ft.	173		173
Repair Concrete Structures	Sq. Ft.		~~60~~ 0	~~60~~ 0
Jack and Remove Existing Bearings	Each	20		20
Filter Fabric for use with Riprap	Sq. Yd.		~~175~~ 126	~~175~~ 126

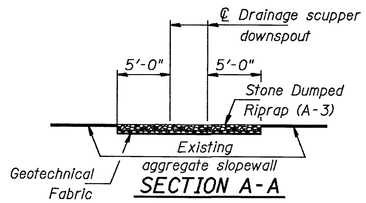

SECTION A-A

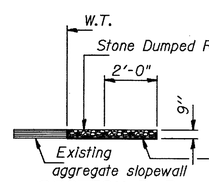

SECTION B-B
(Typ. W. Water Table W. Bd. Lanes)
(Typ. E. Water Table E. Bd. Lanes)

DESIGN SPECIFICATIONS

AASHTO (1989)
LOADING HS 20-44 & Alt.
Allow 25#/Sq. Ft. for future wearing surface.

DESIGN STRESSES

FIELD UNITS

New Constr.
f'c = 3,500 psi
fy = 60,000 psi (Reinf.)
fy = 36,000 psi (Structs., M-183)
fy = 33,000 psi (Exist. Structs.)

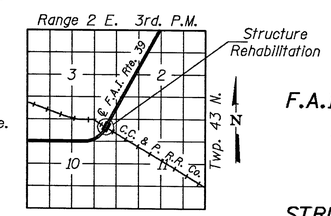

LOCATION SKETCH

GENERAL PLAN
F.A.I. ROUTE 39 OVER C.C.&P. R.R.
F.A.I.-39 SECTION 4 VBY
WINNEBAGO COUNTY
STATION 796+28.52
STRUCTURE NUMBER 101-0067 (E.B.)
STRUCTURE NUMBER 101-0068 (W.B.)

May 3 1990

DESIGNED Shaker Asfour
CHECKED Christopher A. Mikenas
DRAWN Paul W. Sweet / John F. Schneller Jr.
CHECKED SA, CHM

EXAMINED Oral D. Kaspar — ENGINEER OF BRIDGE DESIGN
PASSED Ralph E. Anderson — ENGINEER OF BRIDGES AND STRUCTURES
APPROVED — DIRECTOR OF HIGHWAYS

081-004225

STATE OF ILLINOIS
DEPARTMENT OF TRANSPORTATION

ROUTE NO.	SECTION	COUNTY	TOTAL SHEETS	SHEET NO.
F.A.I. 39	4VBY	WINNEBAGO	171	53
FED. ROAD DIST. NO. 7		ILLINOIS	FED. AID PROJECT-	

SHEET NO. 2
28 SHEETS

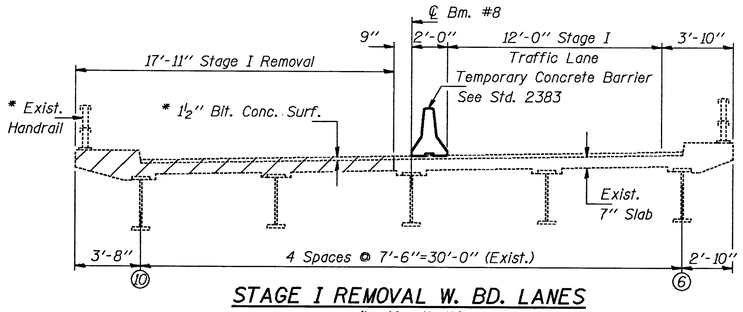

STAGE I REMOVAL W. BD. LANES
(Looking North)

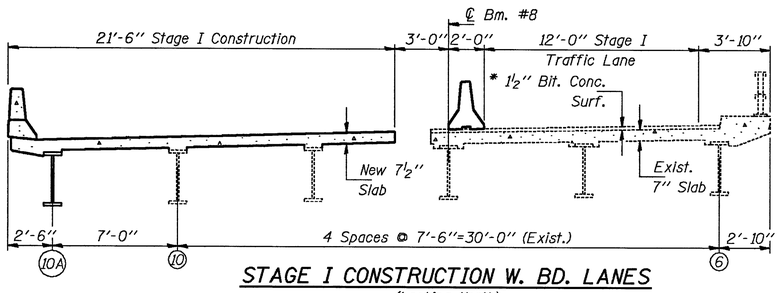

STAGE I CONSTRUCTION W. BD. LANES
(Looking North)

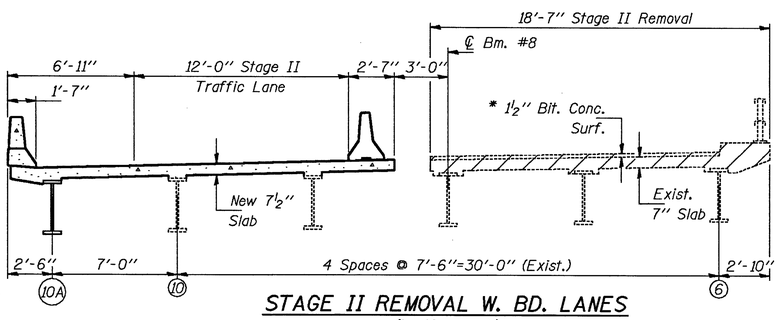

STAGE II REMOVAL W. BD. LANES
(Looking North)

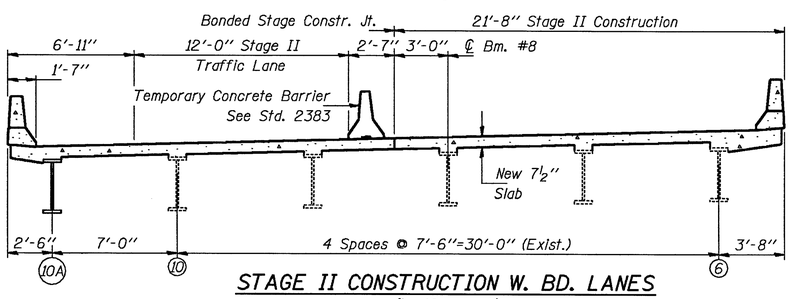

STAGE II CONSTRUCTION W. BD. LANES
(Looking North)

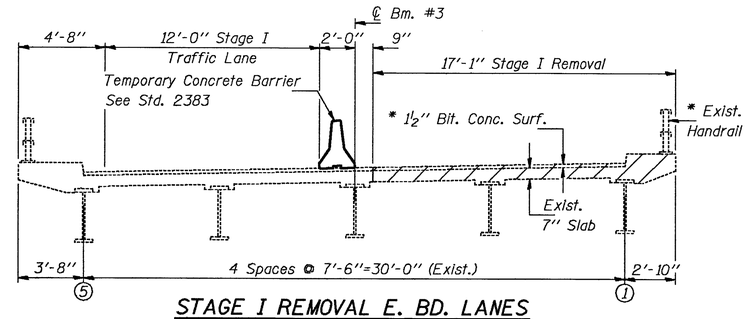

STAGE I REMOVAL E. BD. LANES
(Looking North)

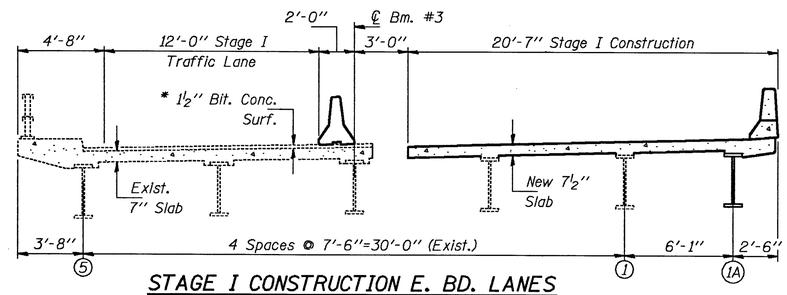

STAGE I CONSTRUCTION E. BD. LANES
(Looking North)

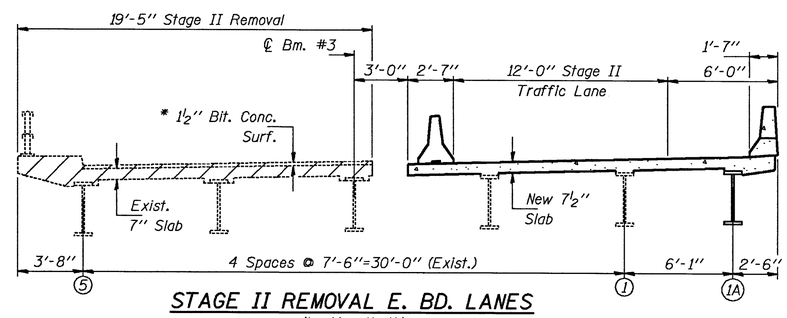

STAGE II REMOVAL E. BD. LANES
(Looking North)

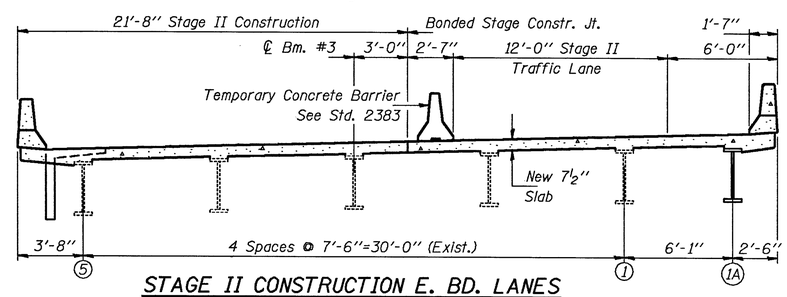

STAGE II CONSTRUCTION E. BD. LANES
(Looking North)

DESIGNED	Shaker Asfour
CHECKED	Christopher M. Wahlenga
DRAWN	John F. Schneller Jr.
CHECKED	SA, CMW

May 3 1990

EXAMINED Jerzy J. Kaspar
ENGINEER OF BRIDGE DESIGN

PASSED Ralph E. Anderson
ENGINEER OF BRIDGES AND STRUCTURES

APPROVED
DIRECTOR OF HIGHWAYS

Notes: Hatched area indicates "Removal of Existing Concrete Deck".
* Cost of removal of Existing Handrail and 1½" Bit. Conc. Surf. is incidental to "Removal of Existing Concrete Deck".
For details of "Temporary Concrete Barrier" see sheet #3 of 28.
For quantity of "Temporary Concrete Barrier" see Roadway Plans.
All dimensions are at Rt. L's to ℄ Bridge.

STAGE CONSTRUCTION DETAILS
F.A.I. RT. 39 SEC. 4VBY
WINNEBAGO COUNTY
STA. 796+28.52

STATE OF ILLINOIS
DEPARTMENT OF TRANSPORTATION

ROUTE NO.	SECTION	COUNTY	TOTAL SHEETS	SHEET NO.
F.A.I. 39	4VBY	WINNEBAGO	171	54
FED. ROAD DIST. NO. 7	ILLINOIS	FED. AID PROJECT-		

SHEET NO. 3
28 SHEETS

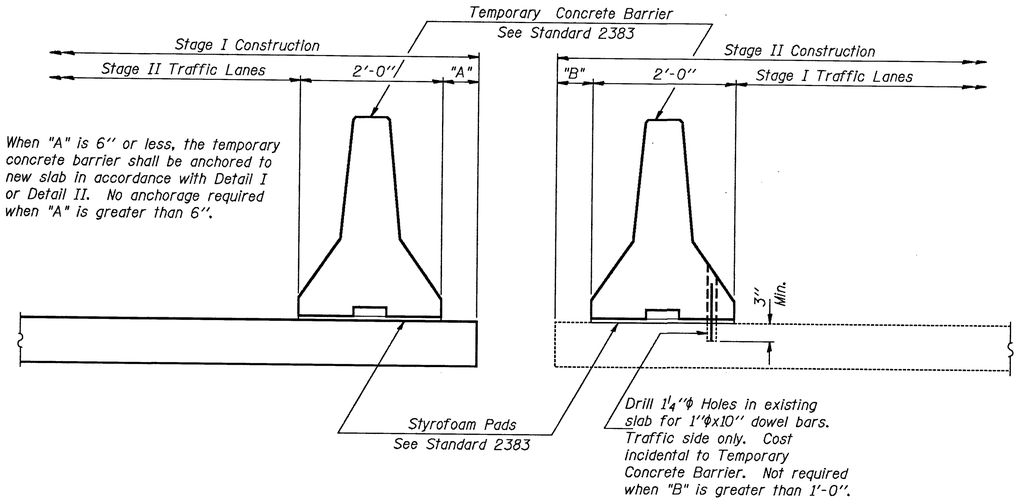

SECTIONS THRU SLAB

NOTES

Detail I - With Bar Splicer or Couplers:
Connect one (1) 1" x 7" x 10" steel PL to the top layer of couplers with 2-⅝"ϕ bolts screwed to coupler at approximate ℄ of each 10'-0" barrier panel.

Detail II - With Extended Reinforcement Bars:
Connect one (1) 1" x 7" x 10" steel PL to the concrete slab with 2-⅝"ϕ Expansion Anchors or cast in place inserts spaced between the top layer of reinforcement at approximate ℄ of each 10'-0" barrier panel.

Cost of anchorage is incidental to Temporary Concrete Barrier.

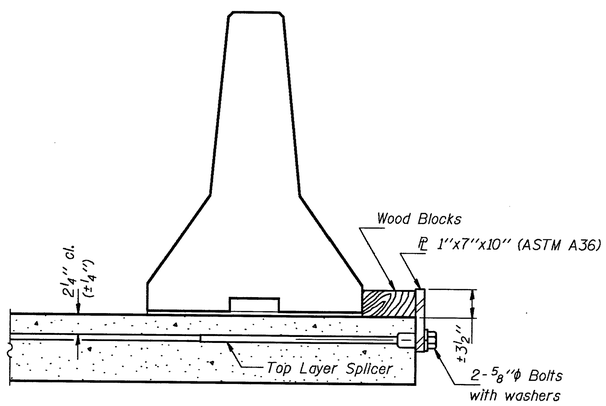

DETAIL I

The 1" x 7" x 10" Plate shall not be removed until Stage II Construction forms and reinforcement bars are in place.

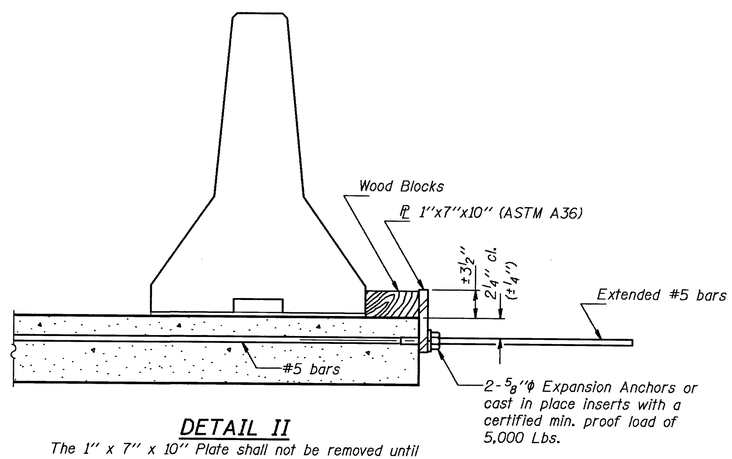

DETAIL II

The 1" x 7" x 10" Plate shall not be removed until Stage II Construction forms and all reinforcement bars are in place and the concrete is ready to be placed.

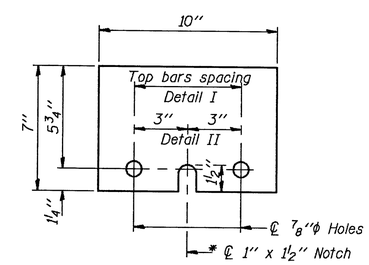

PL 1" x 7" x 10"

* Required only with Detail II

DESIGNED	Shaker Asfour
CHECKED	Christopher A. Wehrupe
DRAWN	John F. Schneller Jr.
CHECKED	SA, CAM

May 3 1990

EXAMINED Jaj J. Kaspar — ENGINEER OF BRIDGE DESIGN

PASSED Ralph E. Anderson — ENGINEER OF BRIDGES AND STRUCTURES

APPROVED — DIRECTOR OF HIGHWAYS

R-27 6-1-89

TEMPORARY CONCRETE BARRIER
FOR STAGE CONSTRUCTION
F.A.I. RT. 39 SEC. 4VBY
WINNEBAGO COUNTY
STA. 796+28.52

STATE OF ILLINOIS
DEPARTMENT OF TRANSPORTATION

ROUTE NO.	SECTION	COUNTY	TOTAL SHEETS	SHEET NO.
F.A.I. 39	4VBY	WINNEBAGO	171	55
FED. ROAD DIST. NO. 7		ILLINOIS	FED. AID PROJECT-	

SHEET NO. 4
28 SHEETS

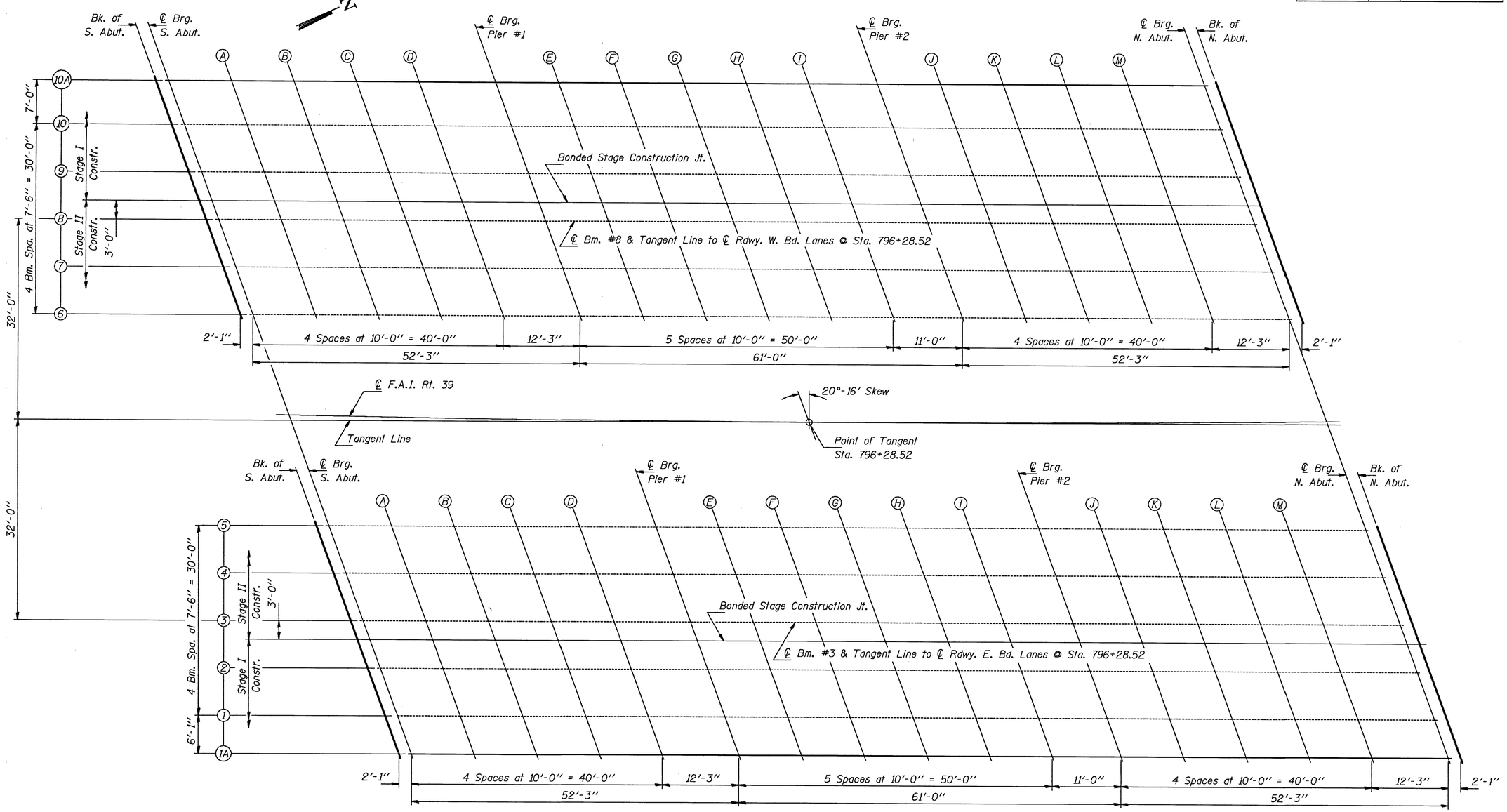

PLAN

NOTE:
Work this sheet with sheets #5 & #6 of 28.

DESIGNED	Shaker Asfour
CHECKED	Christopher H. Mahnke
DRAWN	John F. Schneller Jr.
CHECKED	SA, CHM

May 3 1990
EXAMINED Jaroj J. Kaspar — ENGINEER OF BRIDGE DESIGN
PASSED Ralph E. Anderson — ENGINEER OF BRIDGES AND STRUCTURES
APPROVED — DIRECTOR OF HIGHWAYS

E-S 1-6-82

TOP OF SLAB ELEVATIONS
F.A.I. RT. 39 SEC. 4VBY
WINNEBAGO COUNTY
STA. 796+28.52

ROUTE NO.	SECTION	COUNTY	TOTAL SHEETS	SHEET NO.
F.A.I. 39	4VBY	WINNEBAGO	171	56
FED. ROAD DIST. NO. 7		ILLINOIS	FED. AID PROJECT-	

SHEET NO. 5
28 SHEETS

STATE OF ILLINOIS
DEPARTMENT OF TRANSPORTATION

BEAM #10A

Location	Station	Offset	Theoretical Grade Elevations	Theoretical Grade Elevations Adjusted For Dead Load Deflection
Bk. S. Abut.	79521.585	-21.011	797.592	797.592
℄ Brg. S. Abut.	79523.687	-21.050	797.579	797.579
A	79533.779	-21.224	797.520	797.532
B	79543.872	-21.381	797.459	797.477
C	79553.965	-21.519	797.397	797.415
D	79564.059	-21.641	797.334	797.344
℄ Brg. Pier 1	79576.424	-21.765	797.255	797.255
E	79586.519	-21.848	797.190	797.194
F	79596.613	-21.912	797.124	797.132
G	79606.708	-21.959	797.056	797.072
H	79616.803	-21.988	796.989	796.998
I	79626.899	-22.000	796.922	796.926
℄ Brg. Pier 2	79638.003	-21.992	796.849	796.849
J	79648.098	-21.967	796.783	796.791
K	79658.193	-21.924	796.717	796.733
L	79668.288	-21.863	796.651	796.671
M	79678.382	-21.785	796.586	796.601
℄ Brg. N. Abut.	79690.748	-21.665	796.506	796.506
Bk. N. Abut.	79692.851	-21.642	796.493	796.493

BEAM #10

Location	Station	Offset	Theoretical Grade Elevations	Theoretical Grade Elevations Adjusted For Dead Load Deflection
Bk. S. Abut.	79524.322	-14.060	797.681	797.681
℄ Brg. S. Abut.	79526.422	-14.098	797.668	797.668
A	79536.502	-14.267	797.608	797.620
B	79546.582	-14.419	797.547	797.566
C	79556.663	-14.553	797.485	797.503
D	79566.744	-14.670	797.422	797.432
℄ Brg. Pier 1	79579.094	-14.789	797.343	797.343
E	79589.176	-14.866	797.278	797.281
F	79599.259	-14.926	797.211	797.219
G	79609.341	-14.968	797.144	797.159
H	79619.424	-14.993	797.077	797.086
I	79629.507	-15.000	797.010	797.014
℄ Brg. Pier 2	79640.598	-14.987	796.937	796.937
J	79650.680	-14.957	796.871	796.879
K	79660.763	-14.910	796.805	796.821
L	79670.845	-14.845	796.740	796.759
M	79680.927	-14.762	796.674	796.689
℄ Brg. N. Abut.	79693.277	-14.637	796.595	796.595
Bk. N. Abut.	79695.377	-14.613	796.581	796.581

BEAM #9

Location	Station	Offset	Theoretical Grade Elevations	Theoretical Grade Elevations Adjusted For Dead Load Deflection
Bk. S. Abut.	79527.247	-6.611	797.776	797.776
℄ Brg. S. Abut.	79529.344	-6.647	797.764	797.764
A	79539.411	-6.812	797.703	797.715
B	79549.478	-6.959	797.642	797.661
C	79559.546	-7.088	797.580	797.598
D	79569.614	-7.199	797.516	797.526
℄ Brg. Pier 1	79581.948	-7.312	797.437	797.437
E	79592.017	-7.385	797.371	797.375
F	79602.086	-7.439	797.305	797.313
G	79612.155	-7.477	797.238	797.253
H	79622.225	-7.497	797.171	797.180
I	79632.294	-7.499	797.104	797.108
℄ Brg. Pier 2	79643.370	-7.481	797.032	797.032
J	79653.440	-7.446	796.966	796.974
K	79663.509	-7.394	796.900	796.916
L	79673.578	-7.324	796.835	796.854
M	79683.646	-7.237	796.769	796.784
℄ Brg. N. Abut.	79695.980	-7.106	796.690	796.690
Bk. N. Abut.	79698.077	-7.081	796.676	796.676

STAGE CONSTRUCTION LINE

Location	Station	Offset	Theoretical Grade Elevations	Theoretical Grade Elevations Adjusted For Dead Load Deflection
Bk. S. Abut.	79528.998	-2.141	797.833	797.833
℄ Brg. S. Abut.	79531.094	-2.177	797.821	797.821
A	79541.153	-2.338	797.760	797.772
B	79551.212	-2.482	797.699	797.717
C	79561.272	-2.608	797.637	797.654
D	79571.332	-2.716	797.573	797.583
℄ Brg. Pier 1	79583.656	-2.825	797.494	797.494
E	79593.717	-2.895	797.428	797.431
F	79603.779	-2.947	797.361	797.369
G	79613.840	-2.981	797.294	797.309
H	79623.901	-2.998	797.227	797.236
I	79633.963	-2.997	797.161	797.165
℄ Brg. Pier 2	79645.030	-2.976	797.088	797.088
J	79655.092	-2.939	797.022	797.030
K	79665.153	-2.884	796.957	796.973
L	79675.214	-2.811	796.891	796.911
M	79685.274	-2.721	796.826	796.841
℄ Brg. N. Abut.	79697.598	-2.586	796.747	796.747
Bk. N. Abut.	79699.694	-2.561	796.734	796.734

BEAM #8

Location	Station	Offset	Theoretical Grade Elevations	Theoretical Grade Elevations Adjusted For Dead Load Deflection
Bk. S. Abut.	79530.164	0.840	797.871	797.871
℄ Brg. S. Abut.	79532.259	0.804	797.859	797.859
A	79542.312	0.645	797.798	797.810
B	79552.366	0.503	797.737	797.755
C	79562.421	0.379	797.674	797.692
D	79572.476	0.273	797.611	797.620
℄ Brg. Pier 1	79584.794	0.166	797.531	797.531
E	79594.850	0.098	797.465	797.469
F	79604.906	0.048	797.398	797.407
G	79614.962	0.016	797.331	797.347
H	79625.018	0.001	797.265	797.274
I	79635.074	0.004	797.199	797.202
℄ Brg. Pier 2	79646.136	0.027	797.126	797.126
J	79656.192	0.066	797.060	797.068
K	79666.247	0.124	796.995	797.011
L	79676.303	0.198	796.929	796.949
M	79686.358	0.290	796.864	796.879
℄ Brg. N. Abut.	79698.676	0.427	796.785	796.785
Bk. N. Abut.	79700.770	0.453	796.772	796.772

BEAM #7

Location	Station	Offset	Theoretical Grade Elevations	Theoretical Grade Elevations Adjusted For Dead Load Deflection
Bk. S. Abut.	79533.074	8.292	797.966	797.966
℄ Brg. S. Abut.	79535.166	8.257	797.954	797.954
A	79545.206	8.103	797.893	797.905
B	79555.247	7.967	797.832	797.850
C	79565.289	7.847	797.769	797.787
D	79575.331	7.746	797.705	797.715
℄ Brg. Pier 1	79587.633	7.645	797.625	797.625
E	79597.675	7.583	797.559	797.562
F	79607.718	7.538	797.492	797.501
G	79617.761	7.510	797.425	797.441
H	79627.804	7.500	797.359	797.368
I	79637.847	7.508	797.293	797.297
℄ Brg. Pier 2	79648.894	7.536	797.220	797.220
J	79658.936	7.580	797.155	797.163
K	79668.979	7.642	797.089	797.105
L	79679.021	7.722	797.024	797.044
M	79689.063	7.819	796.959	796.974
℄ Brg. N. Abut.	79701.364	7.961	796.880	796.880
Bk. N. Abut.	79703.456	7.988	796.867	796.867

BEAM #6

Location	Station	Offset	Theoretical Grade Elevations	Theoretical Grade Elevations Adjusted For Dead Load Deflection
Bk. S. Abut.	79535.976	15.745	798.062	798.062
℄ Brg. S. Abut.	79538.065	15.712	798.049	798.049
A	79548.093	15.563	797.988	798.000
B	79558.121	15.431	797.926	797.945
C	79568.149	15.317	797.863	797.881
D	79578.178	15.221	797.799	797.809
℄ Brg. Pier 1	79590.464	15.126	797.719	797.719
E	79600.493	15.068	797.653	797.656
F	79610.523	15.028	797.586	797.594
G	79620.552	15.006	797.519	797.535
H	79630.582	15.000	797.453	797.462
I	79640.612	15.013	797.387	797.391
℄ Brg. Pier 2	79651.645	15.047	797.315	797.315
J	79661.674	15.096	797.249	797.257
K	79671.703	15.162	797.184	797.200
L	79681.732	15.246	797.119	797.139
M	79691.761	15.348	797.055	797.069
℄ Brg. N. Abut.	79704.046	15.496	796.976	796.976
Bk. N. Abut.	79706.135	15.524	796.962	796.962

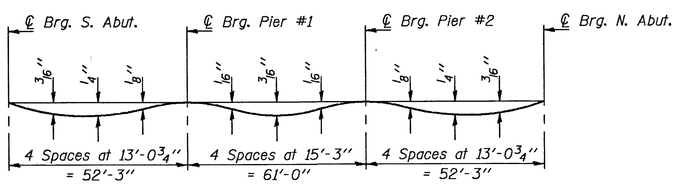

DEAD LOAD DEFLECTION DIAGRAM

(Includes weight of concrete only)

Note: The above deflections are not to be used in the field if the engineer is working from the grade elevations adjusted for dead load deflections.

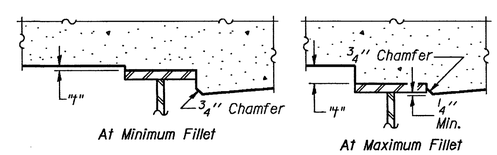

To determine "t": After all structural steel has been erected, elevations of the top flanges of the beams shall be taken at intervals shown on sheet #4 of 28. These elevations subtracted from the "Theoretical Grade Elevations Adjusted for Dead Load Deflection" shown on above, minus slab thickness, equals the fillet heights "t" above top flange of beams.

FILLET HEIGHTS

NOTE:
Work this sheet with sheet #4 of 28.

TOP OF SLAB ELEVATIONS
WEST BOUND LANES
F.A.I. RT. 39 SEC. 4VBY
WINNEBAGO COUNTY
STA. 796+28.52

DESIGNED Shaker Asfour
CHECKED Christopher H. McIntyre
DRAWN John F. Schneller Jr.
CHECKED SA, CHM

E-S 1-6-82

May 3 1986
EXAMINED Greg J. Kaspar
ENGINEER OF BRIDGE DESIGN
PASSED Ralph E. Anderson
ENGINEER OF BRIDGES AND STRUCTURES
APPROVED
DIRECTOR OF HIGHWAYS

STATE OF ILLINOIS
DEPARTMENT OF TRANSPORTATION

ROUTE NO.	SECTION	COUNTY	TOTAL SHEETS	SHEET NO.
F.A.I. 39	4VBY	WINNEBAGO	171	57
FED. ROAD DIST. NO. 7		ILLINOIS	FED. AID PROJECT-	

SHEET NO. 6
28 SHEETS

BEAM #5

Location	Station	Offset	Theoretical Grade Elevations	Theoretical Grade Elevations Adjusted For Dead Load Deflection
Bk. S. Abut.	79549.038	-14.447	797.532	797.532
℄ Brg. S. Abut.	79551.115	-14.476	797.520	797.520
A	79561.084	-14.602	797.458	797.470
B	79571.053	-14.711	797.395	797.413
C	79581.023	-14.803	797.331	797.349
D	79590.992	-14.877	797.266	797.276
℄ Brg. Pier 1	79603.206	-14.944	797.185	797.185
E	79613.176	-14.979	797.118	797.122
F	79623.146	-14.997	797.052	797.061
G	79633.117	-14.998	796.986	797.002
H	79643.087	-14.981	796.921	796.930
I	79653.058	-14.947	796.856	796.859
℄ Brg. Pier 2	79664.025	-14.890	796.784	796.784
J	79673.995	-14.819	796.719	796.727
K	79683.964	-14.731	796.655	796.671
L	79693.934	-14.625	796.591	796.610
M	79703.903	-14.503	796.527	796.541
℄ Brg. N. Abut.	79716.114	-14.328	796.449	796.449
Bk. N. Abut.	79718.190	-14.296	796.436	796.436

BEAM #4

Location	Station	Offset	Theoretical Grade Elevations	Theoretical Grade Elevations Adjusted For Dead Load Deflection
Bk. S. Abut.	79551.899	-6.985	797.627	797.627
℄ Brg. S. Abut.	79553.973	-7.013	797.615	797.615
A	79563.929	-7.134	797.552	797.564
B	79573.885	-7.238	797.489	797.508
C	79583.842	-7.325	797.425	797.443
D	79593.799	-7.394	797.360	797.370
℄ Brg. Pier 1	79605.996	-7.456	797.279	797.279
E	79615.954	-7.486	797.212	797.216
F	79625.911	-7.499	797.146	797.155
G	79635.868	-7.495	797.081	797.096
H	79645.826	-7.474	797.015	797.025
I	79655.783	-7.435	796.950	796.954
℄ Brg. Pier 2	79666.736	-7.372	796.879	796.879
J	79676.693	-7.297	796.814	796.822
K	79686.649	-7.204	796.750	796.766
L	79696.606	-7.094	796.686	796.705
M	79706.561	-6.966	796.622	796.637
℄ Brg. N. Abut.	79718.757	-6.786	796.544	796.544
Bk. N. Abut.	79720.830	-6.753	796.531	796.531

BEAM #3

Location	Station	Offset	Theoretical Grade Elevations	Theoretical Grade Elevations Adjusted For Dead Load Deflection
Bk. S. Abut.	79554.752	0.478	797.722	797.722
℄ Brg. S. Abut.	79556.823	0.451	797.709	797.709
A	79566.767	0.335	797.647	797.659
B	79576.710	0.236	797.584	797.602
C	79586.654	0.154	797.519	797.537
D	79596.598	0.089	797.454	797.463
℄ Brg. Pier 1	79608.780	0.034	797.373	797.373
E	79618.724	0.008	797.307	797.310
F	79628.668	0.000	797.241	797.249
G	79638.613	0.009	797.175	797.191
H	79648.557	0.035	797.110	797.119
I	79658.502	0.079	797.045	797.049
℄ Brg. Pier 2	79669.440	0.147	796.974	796.974
J	79679.384	0.227	796.909	796.917
K	79689.327	0.324	796.845	796.861
L	79699.271	0.439	796.781	796.801
M	79709.213	0.571	796.718	796.732
℄ Brg. N. Abut.	79721.392	0.757	796.640	796.640
Bk. N. Abut.	79723.464	0.791	796.627	796.627

STAGE CONSTRUCTION LINE

Location	Station	Offset	Theoretical Grade Elevations	Theoretical Grade Elevations Adjusted For Dead Load Deflection
Bk. S. Abut.	79555.891	3.463	797.760	797.760
℄ Brg. S. Abut.	79557.962	3.437	797.747	797.747
A	79567.900	3.323	797.685	797.697
B	79577.838	3.226	797.621	797.640
C	79587.777	3.146	797.557	797.575
D	79597.716	3.083	797.491	797.501
℄ Brg. Pier 1	79609.891	3.030	797.410	797.410
E	79619.830	3.007	797.344	797.348
F	79629.769	3.000	797.279	797.287
G	79639.709	3.011	797.213	797.228
H	79649.648	3.039	797.148	797.157
I	79659.587	3.085	797.083	797.087
℄ Brg. Pier 2	79670.520	3.155	797.012	797.012
J	79680.458	3.237	796.948	796.956
K	79690.397	3.336	796.883	796.899
L	79700.335	3.453	796.820	796.839
M	79710.272	3.587	796.756	796.771
℄ Brg. N. Abut.	79722.445	3.775	796.678	796.678
Bk. N. Abut.	79724.515	3.809	796.665	796.665

BEAM #2

Location	Station	Offset	Theoretical Grade Elevations	Theoretical Grade Elevations Adjusted For Dead Load Deflection
Bk. S. Abut.	79557.598	7.942	797.817	797.817
℄ Brg. S. Abut.	79559.667	7.917	797.804	797.804
A	79569.597	7.805	797.742	797.754
B	79579.528	7.711	797.679	797.696
C	79589.459	7.634	797.613	797.631
D	79599.390	7.575	797.548	797.557
℄ Brg. Pier 1	79611.556	7.525	797.467	797.467
E	79621.487	7.504	797.401	797.404
F	79631.419	7.501	797.335	797.344
G	79641.350	7.514	797.270	797.285
H	79651.282	7.546	797.205	797.214
I	79661.213	7.594	797.140	797.144
℄ Brg. Pier 2	79672.137	7.667	797.069	797.069
J	79682.068	7.752	797.005	797.013
K	79691.998	7.854	796.941	796.957
L	79701.929	7.974	796.877	796.896
M	79711.858	8.110	796.813	796.828
℄ Brg. N. Abut.	79724.021	8.301	796.736	796.736
Bk. N. Abut.	79726.090	8.337	796.723	796.723

BEAM #1

Location	Station	Offset	Theoretical Grade Elevations	Theoretical Grade Elevations Adjusted For Dead Load Deflection
Bk. S. Abut.	79560.436	15.408	797.912	797.912
℄ Brg. S. Abut.	79562.503	15.383	797.899	797.899
A	79572.420	15.277	797.836	797.848
B	79582.338	15.188	797.772	797.791
C	79592.256	15.116	797.707	797.725
D	79602.174	15.061	797.642	797.651
℄ Brg. Pier 1	79614.325	15.018	797.561	797.561
E	79624.243	15.002	797.495	797.498
F	79634.162	15.003	797.430	797.438
G	79644.080	15.021	797.364	797.380
H	79653.999	15.057	797.299	797.309
I	79663.917	15.110	797.235	797.239
℄ Brg. Pier 2	79674.827	15.189	797.164	797.164
J	79684.745	15.278	797.100	797.108
K	79694.663	15.385	797.036	797.052
L	79704.580	15.509	796.972	796.992
M	79714.496	15.650	796.909	796.924
℄ Brg. N. Abut.	79726.643	15.847	796.832	796.832
Bk. N. Abut.	79728.709	15.883	796.819	796.819

BEAM #1A

Location	Station	Offset	Theoretical Grade Elevations	Theoretical Grade Elevations Adjusted For Dead Load Deflection
Bk. S. Abut.	79562.733	21.464	797.989	797.989
℄ Brg. S. Abut.	79564.797	21.441	797.976	797.976
A	79574.704	21.338	797.913	797.925
B	79584.612	21.253	797.849	797.867
C	79594.520	21.185	797.784	797.801
D	79604.428	21.134	797.718	797.728
℄ Brg. Pier 1	79616.565	21.096	797.637	797.637
E	79626.473	21.084	797.572	797.575
F	79636.381	21.089	797.506	797.515
G	79646.290	21.111	797.441	797.456
H	79656.198	21.151	797.376	797.386
I	79666.106	21.208	797.312	797.316
℄ Brg. Pier 2	79677.004	21.290	797.241	797.241
J	79686.911	21.384	797.177	797.185
K	79696.818	21.494	797.113	797.129
L	79706.725	21.622	797.050	797.069
M	79716.631	21.767	796.987	797.001
℄ Brg. N. Abut.	79728.765	21.968	796.910	796.910
Bk. N. Abut.	79730.829	22.005	796.897	796.897

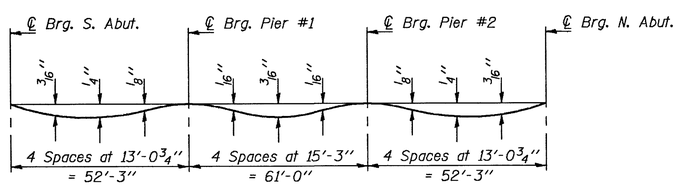

DEAD LOAD DEFLECTION DIAGRAM

(Includes weight of concrete only)

Note: The above deflections are not to be used in the field if the engineer is working from the grade elevations adjusted for dead load deflections.

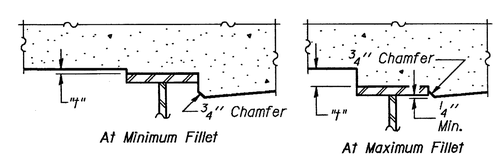

To determine "t": After all structural steel has been erected, elevations of the top flanges of the beams shall be taken at intervals shown on sheet #4 of 28. These elevations subtracted from the "Theoretical Grade Elevations Adjusted for Dead Load Deflection" shown on above, minus slab thickness, equals the fillet heights "t" above top flange of beams.

FILLET HEIGHTS

NOTE:
Work this sheet with sheet #4 of 28.

TOP OF SLAB ELEVATIONS
EAST BOUND LANES
F.A.I. RT. 39 SEC. 4VBY
WINNEBAGO COUNTY
STA. 796+28.52

DESIGNED Shaker Asfour
CHECKED Christopher H. Malinga
DRAWN John F. Schneller Jr.
CHECKED SA, CHM

May 3 1996
EXAMINED Raj D. Kaspar ENGINEER OF BRIDGE DESIGN
PASSED Ralph E. Anderson ENGINEER OF BRIDGES AND STRUCTURES
APPROVED DIRECTOR OF HIGHWAYS

E-S 1-6-82

STATE OF ILLINOIS
DEPARTMENT OF TRANSPORTATION

ROUTE NO.	SECTION	COUNTY	TOTAL SHEETS	SHEET NO.
F.A.I. 39	4VBY	WINNEBAGO	171	58
FED. ROAD DIST. NO. 7		ILLINOIS	FED. AID PROJECT-	

SHEET NO. 7
28 SHEETS

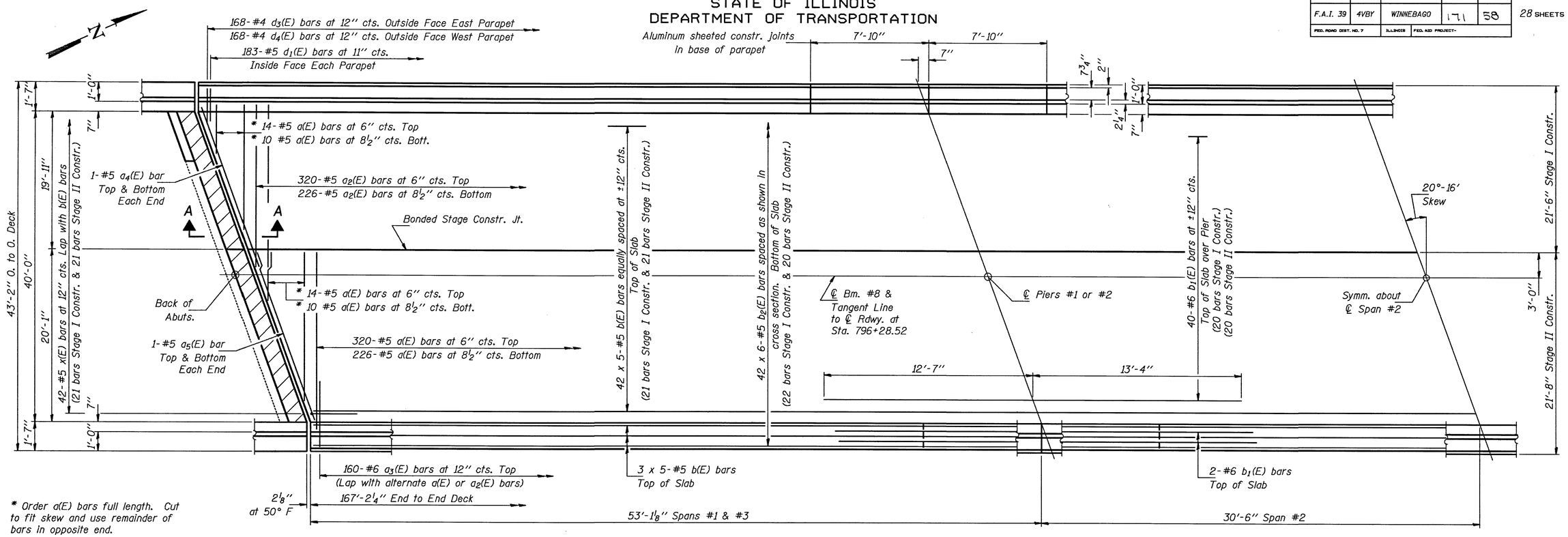

HALF PLAN

* Order a(E) bars full length. Cut to fit skew and use remainder of bars in opposite end.

Notes:
See Sheet #9 of 28 for superstructure details and Bill of Material.
Reinforcement bars designated (E) shall be epoxy coated.
Bars indicated thus 20 x 3-#5 etc. indicates 20 lines of bars with 3 lengths per line.
See Sheet #9 of 28 for parapet reinforcement.
Bars a(E), a_2(E), a_4(E) and a_5(E) shall be tied with double the number of ties normally used where they lap.

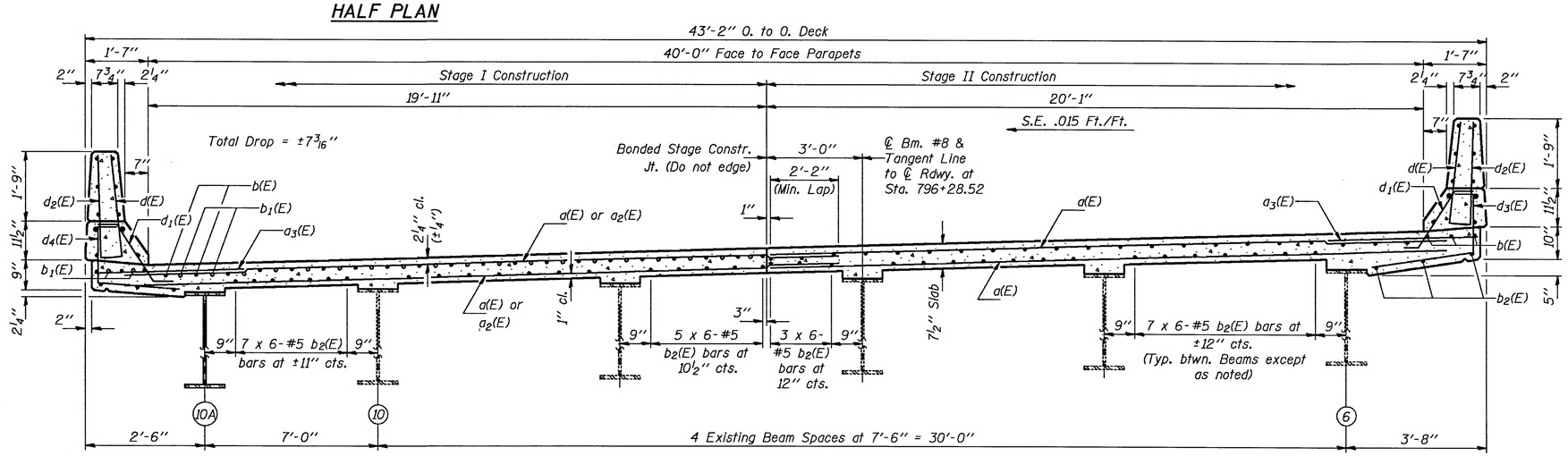

NEAR PIER

NEAR MIDSPAN

CROSS SECTION
(Looking North)

MIN. BAR LAPS
#5 (E) bars = 1'-8"
(Except as noted)

DESIGNED	Shaker Asfour
CHECKED	Christopher H. Mohrenz
DRAWN	John F. Schneller Jr.
CHECKED	SA, CHM

May 3 1990
EXAMINED Greg J. Kasper ENGINEER OF BRIDGE DESIGN
PASSED Ralph E. Anderson ENGINEER OF BRIDGES AND STRUCTURES
APPROVED DIRECTOR OF HIGHWAYS

S-2-0 12-31-87

SUPERSTRUCTURE
WEST BOUND LANES
F.A.I. RT. 39 SEC. 4VBY
WINNEBAGO COUNTY
STA. 796+28.52

ROUTE NO.	SECTION	COUNTY	TOTAL SHEETS	SHEET NO.
F.A.I. 39	4VBY	WINNEBAGO	171	59
FED. ROAD DIST. NO. 7	ILLINOIS	FED. AID PROJECT-		

SHEET NO. 8
28 SHEETS

STATE OF ILLINOIS
DEPARTMENT OF TRANSPORTATION

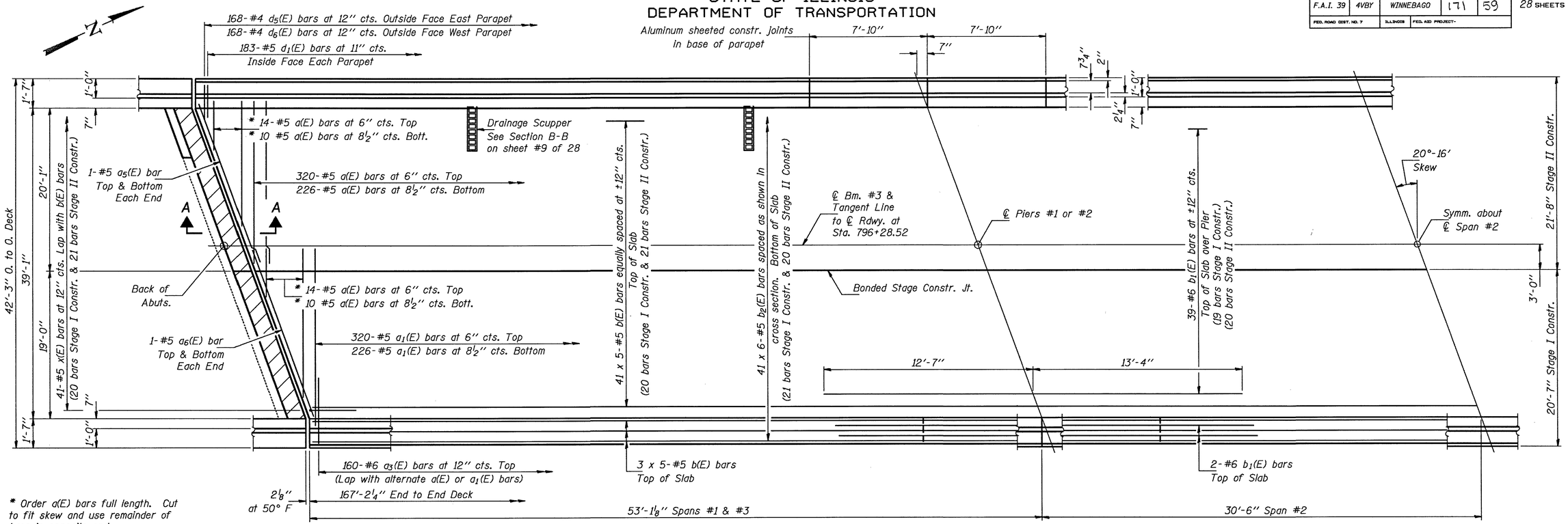

* Order a(E) bars full length. Cut to fit skew and use remainder of bars in opposite end.

HALF PLAN

Notes:

See Sheet #9 of 28 for superstructure details and Bill of Material.

Reinforcement bars designated (E) shall be epoxy coated.

Bars indicated thus 20 x 3-#5 etc. indicates 20 lines of bars with 3 lengths per line.

See Sheet #9 of 28 for parapet reinforcement.

Bars a(E), a_1(E), a_5(E) and a_6(E) shall be tied with double the number of ties normally used where they lap.

See sheet #1 of 28 for Drainage Scuppers location and spacing.

Cut b(E) bars to clear Drainage Scuppers.

MIN. BAR LAPS

#5 (E) bars = 1'-8"
(Except as noted)

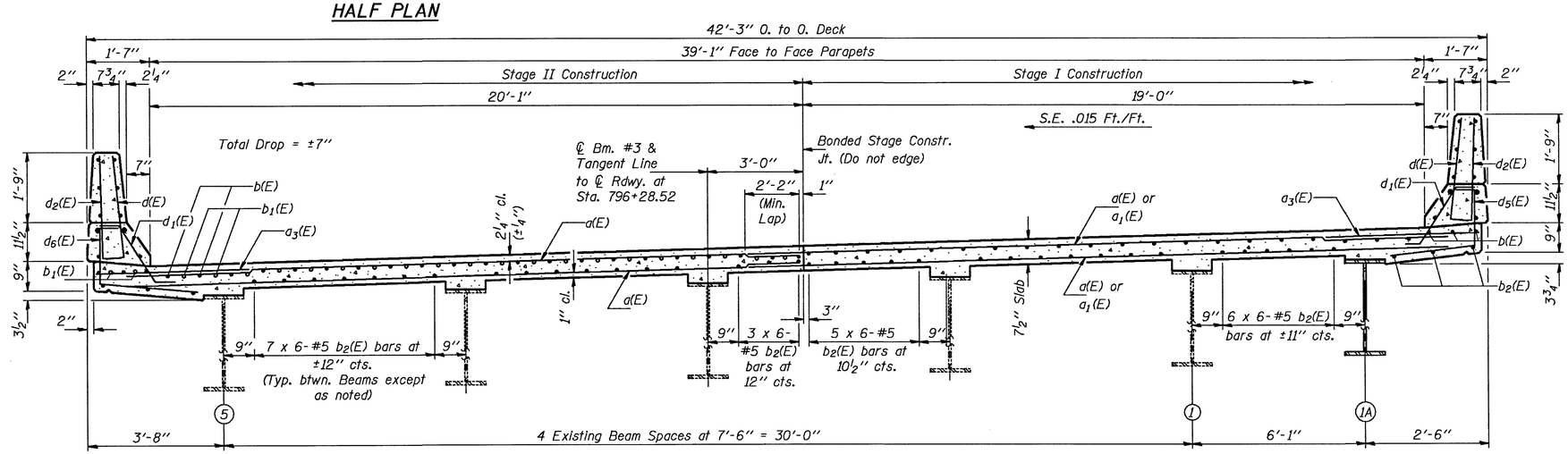

NEAR PIER

NEAR MIDSPAN

CROSS SECTION
(Looking North)

DESIGNED	Shaker Asfour
CHECKED	Christopher M. Mehringer
DRAWN	John F. Schneller Jr.
CHECKED	SA, CMM

May 3 1990

EXAMINED Graj D. Kaspar — ENGINEER OF BRIDGE DESIGN

PASSED Ralph E. Anderson — ENGINEER OF BRIDGES AND STRUCTURES

APPROVED — DIRECTOR OF HIGHWAYS

S-2-0 12-31-87

SUPERSTRUCTURE
EAST BOUND LANES
F.A.I. RT. 39 SEC. 4VBY
WINNEBAGO COUNTY
STA. 796+28.52

STATE OF ILLINOIS
DEPARTMENT OF TRANSPORTATION

ROUTE NO.	SECTION	COUNTY	TOTAL SHEETS	SHEET NO.
F.A.I. 39	4VBY	WINNEBAGO	171	60
FED. ROAD DIST. NO. 7	ILLINOIS	FED. AID PROJECT-		

SHEET NO. 9
28 SHEETS

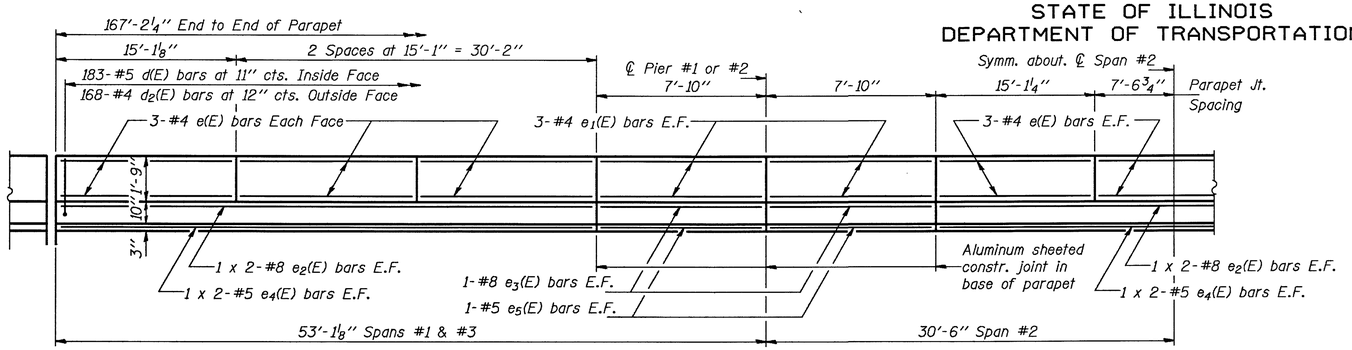

INSIDE ELEVATION OF PARAPET

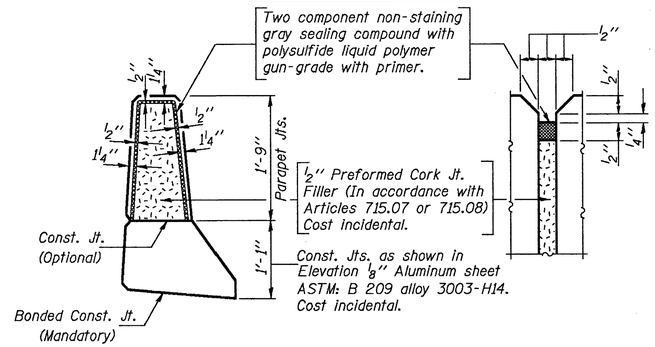

PARAPET JOINT DETAILS

MIN. BAR LAPS

#5 (E) bar = 2'-2"
#8 (E) bar = 4'-6"

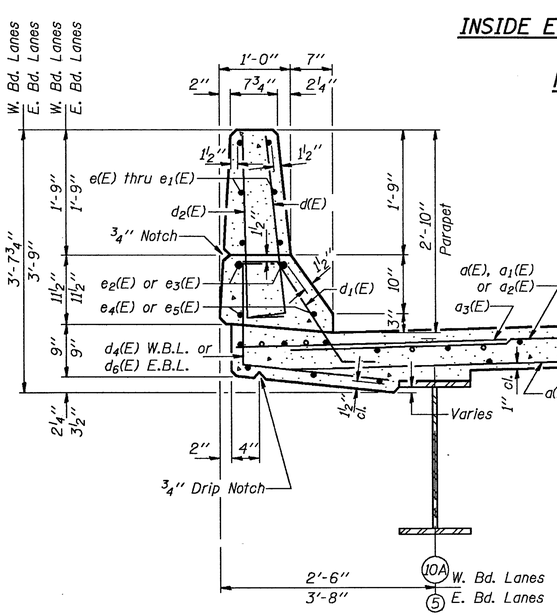

SECTION THRU WEST PARAPET

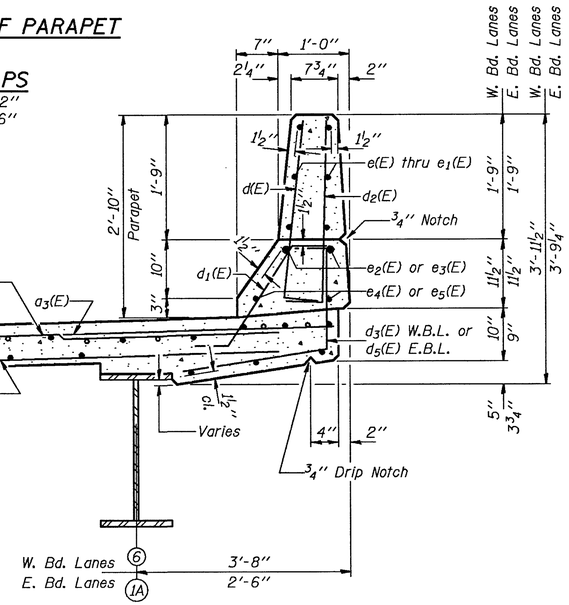

SECTION THRU EAST PARAPET

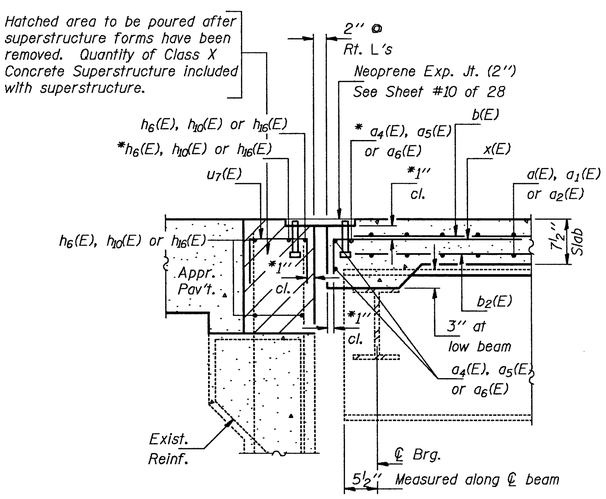

SECTION A-A

* Place $a_4(E)$ thru $a_6(E)$ bars and $h_6(E)$, $h_{10}(E)$ or $h_{16}(E)$ bars in back of anchor bolts as shown if required to maintain 1" cl. (+0-⅛"). Anchor bolts should be tied to $a_4(E)$ thru $a_6(E)$ and $h_6(E)$, $h_{10}(E)$ or $h_{16}(E)$ bars.

TWO SUPERSTRUCTURE BILL OF MATERIAL

Bar	No.	Size	Length	Shape
a(E)	1188	#5	20'-8"	
a1(E)	546	#5	21'-9"	
a2(E)	546	#5	22'-8"	
a3(E)	640	#6	4'-0"	
a4(E)	4	#5	23'-5"	
a5(E)	8	#5	21'-5"	
a6(E)	4	#5	22'-5"	
a7(E)	32	#5	2'-0"	
b(E)	475	#5	34'-9"	
b1(E)	178	#6	25'-11"	
b2(E)	498	#5	29'-3"	
d(E)	732	#5	3'-0"	
d1(E)	732	#5	2'-7"	
d2(E)	672	#4	3'-0"	
d3(E)	168	#4	4'-8"	
d4(E)	168	#4	3'-6"	
d5(E)	168	#4	3'-6"	
d6(E)	168	#4	4'-8"	
e(E)	216	#4	14'-10"	
e1(E)	96	#4	7'-7"	
e2(E)	48	#8	24'-9"	
e3(E)	32	#8	7'-7"	
e4(E)	48	#5	23'-7"	
e5(E)	32	#5	7'-7"	
x(E)	166	#5	4'-1"	
Reinforcement Bars (Epoxy Coated)			Lbs.	110,560
Class X Concrete Superstructure			Cu. Yds.	~~441.0~~ 449.22

Reinforcement bars designated (E) shall be epoxy coated.
Bars indicated thus 1 x 2-#5 etc. indicates 1 line of bars with 2 lengths per line.

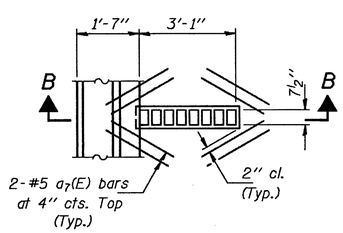

PLAN

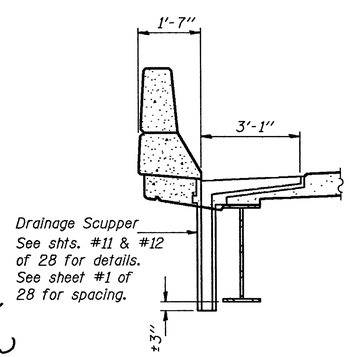

SECTION B-B

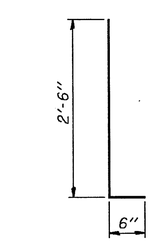

BARS d(E) & d2(E)

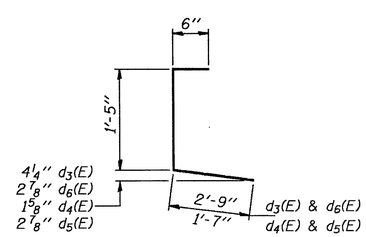

BARS d3(E), d4(E), d5(E) & d6(E)

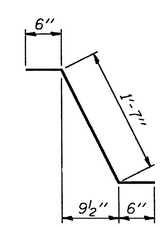

BAR d1(E)

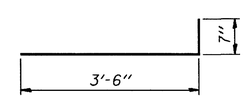

BAR x(E)

SUPERSTRUCTURE DETAILS
F.A.I. RT. 39 SEC. 4VBY
WINNEBAGO COUNTY
STA. 796+28.52

DESIGNED	Shaker Asfour
CHECKED	Christopher H. Mikkelsen
DRAWN	John F. Schneller Jr.
CHECKED	SA, CHM

May 3 1990
EXAMINED Jaj J. Kaspar — ENGINEER OF BRIDGE DESIGN
PASSED Ralph E. Anderson — ENGINEER OF BRIDGES AND STRUCTURES
APPROVED — DIRECTOR OF HIGHWAYS

S-1-D 12-31-87

ROUTE NO.	SECTION	COUNTY	TOTAL SHEETS	SHEET NO.
F.A.I. 39	4VBY	WINNEBAGO	171	61
FED. ROAD DIST. NO. 7	ILLINOIS	FED. AID PROJECT-		

SHEET NO. 10
28 SHEETS

STATE OF ILLINOIS
DEPARTMENT OF TRANSPORTATION

Joint Size	"C" at 50°F	"D" at 50°F
2"	2"	1½" Min.
2½"	2½"	1¾" Min.
4"	3"	2½" Min.

INSTALLATION NOTES

1. Install sponge mandrels into positions shown to form flap convolution.
2. Install parapet or sidewalk piece (trim roadway flap to fit before applying epoxy).
3. Install continuous seal in roadway.
4. Install anchor blocks as indicated.

NOTE A: Maximum spacing of anchor bolts shall be 12" centers.

SKEW LIMITATIONS

The details of the anchor blocks and the elastomeric membrane in the parapet, as shown, are for up to 50° skews.

For skews greater than 50°, the anchor blocks and the elastomeric membrane, installed in accordance with dimension "D", might require modifications to insure a minimum clearance of 1½" from centerline of anchor studs to edge of parapet opening. The anchor blocks and the elastomeric membrane shall also be installed to the top of the parapet with the anchor studs spaced at ±12" cts.

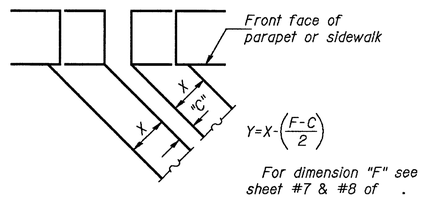

FORMING BLOCKOUT SKETCH

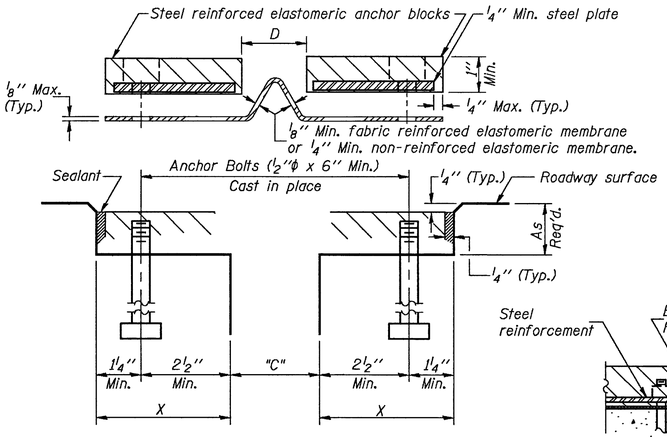

CROSS SECTION

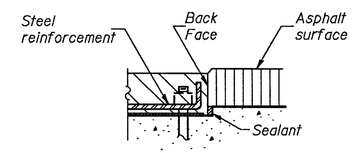

ANCHOR BLOCK REINFORCEMENT WITH ASPHALT SURFACE

GENERAL NOTES

Continuous Seal Neoprene Expansion Joint shall consist of molded anchor blocks of elastomer and steel, field assembled over continuous lengths of elastomeric membrane. See Special Provisions.

The elastomeric membrane shall be premolded with a single or a double upward convolution that will have a "memory" to return to its molded position upon joint closure.

The steel reinforcement must extend up the back face of anchor blocks when asphalt surfaces are used but is optional in concrete blockout.

The convolution length shall be such that the extended length will not be greater than the manufactured length when the joint is fully expanded in its design range and will not protrude above the anchor blocks when the joint is fully compressed.

Joint openings shall be adjusted in accordance with Article 503.07(c) of the Standard Specifications when the deck is poured at an ambient temperature other than 50° F.

The parapet and sidewalk flaps may be furnished factory vulcanized to the roadway membrane provided the centerline of the convolution is maintained and the process and method meet the approval of the Engineer.

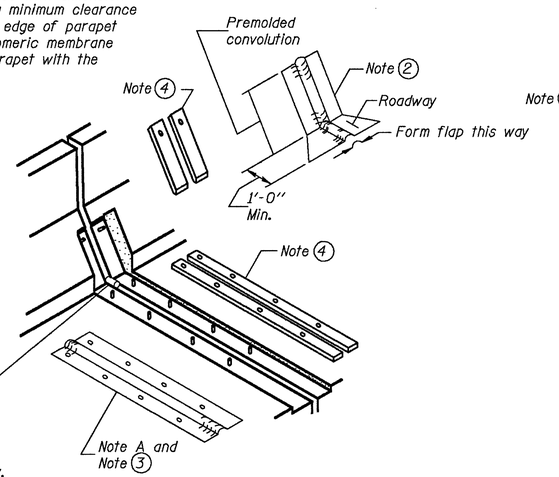

AT PARAPET

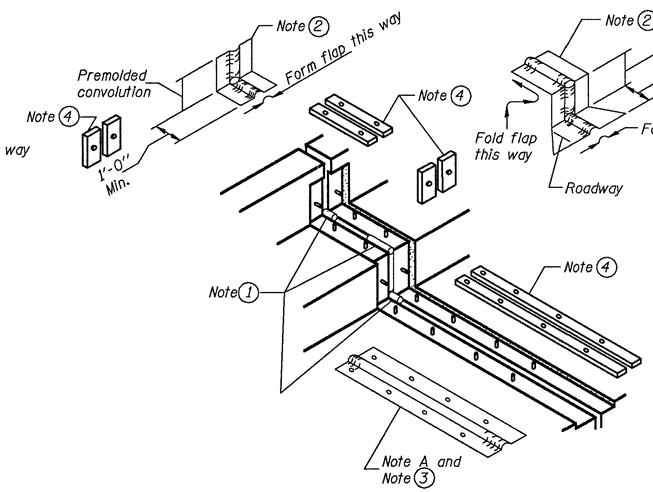

AT SIDEWALK OR MEDIAN

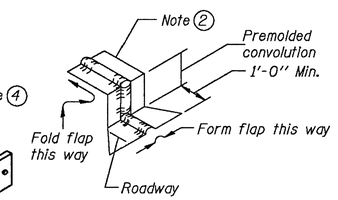

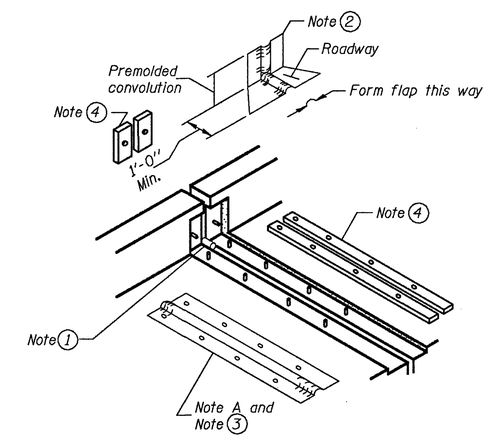

AT WALL

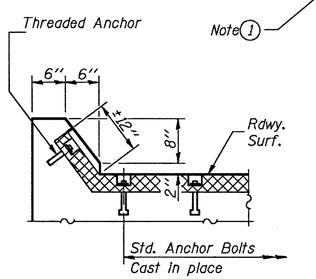

AT CURB

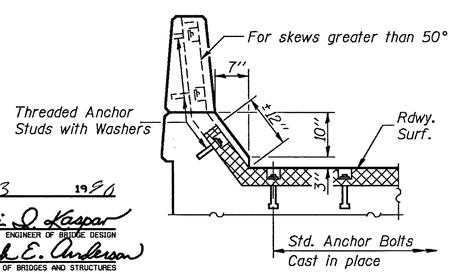

AT PARAPET

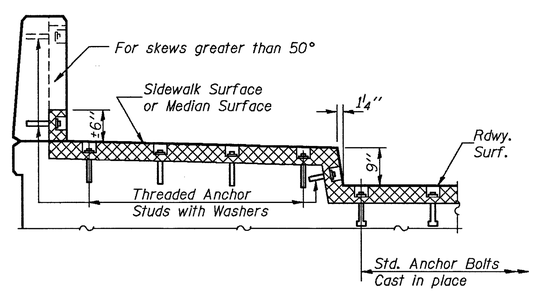

AT SIDEWALK OR MEDIAN

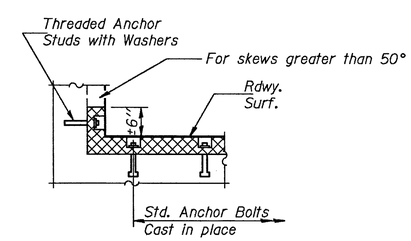

AT WALL

TYPICAL END TREATMENTS

DESIGNED	Shaker Asfour
CHECKED	Chris Stoffel
DRAWN	John F. Schneller Jr.
CHECKED	SA, CHM

May 3 1990

EXAMINED Graj J. Kaspar — ENGINEER OF BRIDGE DESIGN

PASSED Ralph E. Anderson — ENGINEER OF BRIDGES AND STRUCTURES

APPROVED — DIRECTOR OF HIGHWAYS

EJ-CS

CONTINUOUS SEAL TYPE NEOPRENE EXPANSION JOINTS

For 2", 2½" and 4" Movement

F.A.I. RT. 39 SEC. 4VBY
WINNEBAGO COUNTY
STA. 796+28.52

STATE OF ILLINOIS
DEPARTMENT OF TRANSPORTATION

ROUTE NO.	SECTION	COUNTY	TOTAL SHEETS	SHEET NO.
F.A.I. 39	4VBY	WINNEBAGO	171	62
FED. ROAD DIST. NO. 7		ILLINOIS	FED. AID PROJECT-	

SHEET NO. 11
28 SHEETS

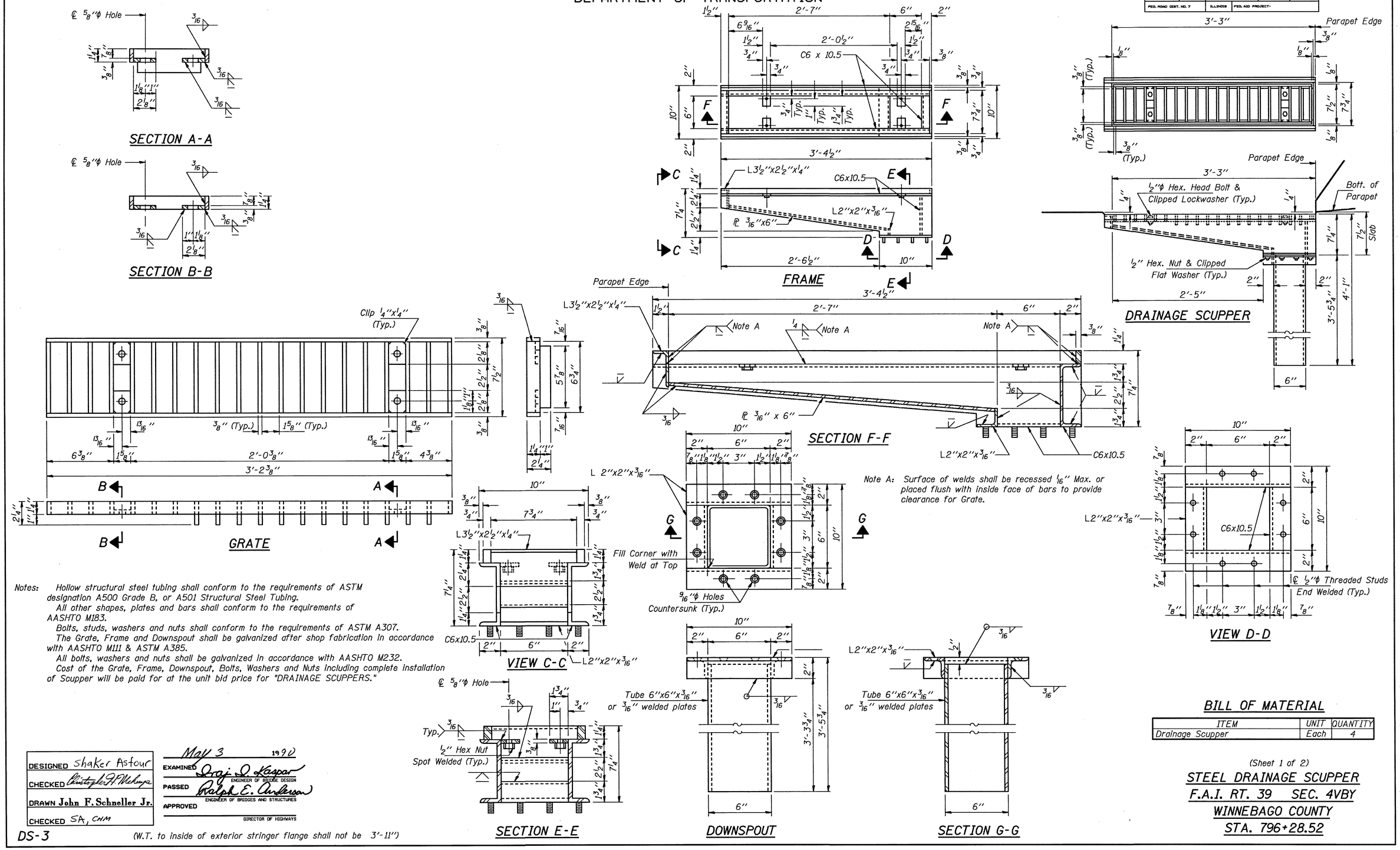

Notes: Hollow structural steel tubing shall conform to the requirements of ASTM designation A500 Grade B, or A501 Structural Steel Tubing.
All other shapes, plates and bars shall conform to the requirements of AASHTO M183.
Bolts, studs, washers and nuts shall conform to the requirements of ASTM A307.
The Grate, Frame and Downspout shall be galvanized after shop fabrication in accordance with AASHTO M111 & ASTM A385.
All bolts, washers and nuts shall be galvanized in accordance with AASHTO M232.
Cost of the Grate, Frame, Downspout, Bolts, Washers and Nuts including complete installation of Scupper will be paid for at the unit bid price for "DRAINAGE SCUPPERS."

BILL OF MATERIAL

ITEM	UNIT	QUANTITY
Drainage Scupper	Each	4

DESIGNED	Shaker Astour
CHECKED	Christopher A. Wehmeyer
DRAWN	John F. Schneller Jr.
CHECKED	SA, CHM

May 3 1990
EXAMINED Graj J. Kaspar — ENGINEER OF BRIDGE DESIGN
PASSED Ralph E. Anderson — ENGINEER OF BRIDGES AND STRUCTURES
APPROVED — DIRECTOR OF HIGHWAYS

DS-3

(W.T. to inside of exterior stringer flange shall not be 3'-11")

(Sheet 1 of 2)

STEEL DRAINAGE SCUPPER
F.A.I. RT. 39 SEC. 4VBY
WINNEBAGO COUNTY
STA. 796+28.52

ROUTE NO.	SECTION	COUNTY	TOTAL SHEETS	SHEET NO.
F.A.I. 39	4VBY	WINNEBAGO	171	63
FED. ROAD DIST. NO. 7		ILLINOIS	FED. AID PROJECT-	

SHEET NO. 12
28 SHEETS

STATE OF ILLINOIS
DEPARTMENT OF TRANSPORTATION

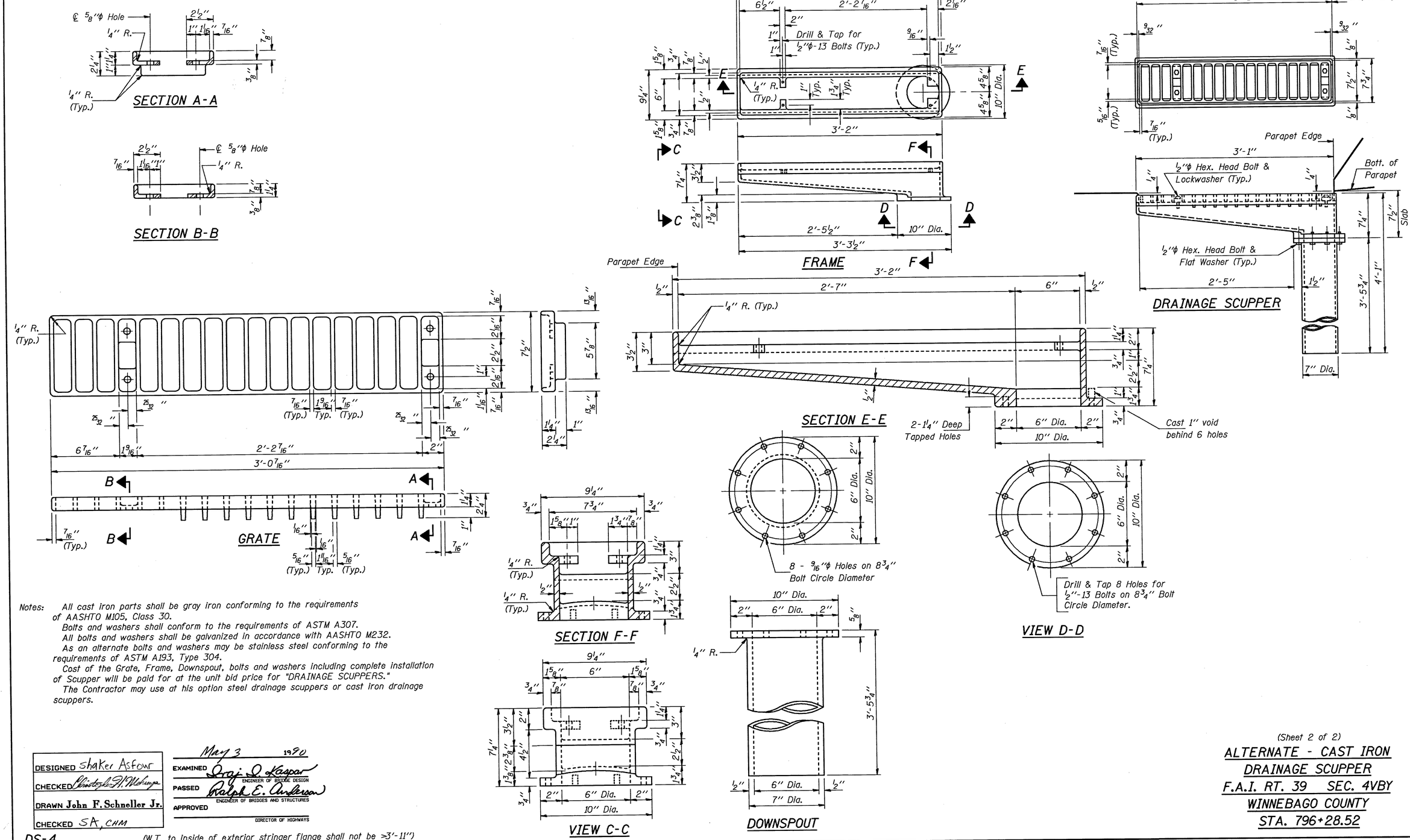

Notes: All cast iron parts shall be gray iron conforming to the requirements of AASHTO M105, Class 30.
Bolts and washers shall conform to the requirements of ASTM A307.
All bolts and washers shall be galvanized in accordance with AASHTO M232.
As an alternate bolts and washers may be stainless steel conforming to the requirements of ASTM A193, Type 304.
Cost of the Grate, Frame, Downspout, bolts and washers including complete installation of Scupper will be paid for at the unit bid price for "DRAINAGE SCUPPERS."
The Contractor may use at his option steel drainage scuppers or cast iron drainage scuppers.

DESIGNED Shaker Asfour	May 3 1980
CHECKED Christopher H. Mehrup	EXAMINED Graj. J. Kaspar, ENGINEER OF BRIDGE DESIGN
DRAWN John F. Schneller Jr.	PASSED Ralph E. Anderson, ENGINEER OF BRIDGES AND STRUCTURES
CHECKED SA, CHM	APPROVED DIRECTOR OF HIGHWAYS

DS-4

(W.T. to inside of exterior stringer flange shall not be ≥3'-11")

(Sheet 2 of 2)

ALTERNATE - CAST IRON
DRAINAGE SCUPPER
F.A.I. RT. 39 SEC. 4VBY
WINNEBAGO COUNTY
STA. 796+28.52

STATE OF ILLINOIS
DEPARTMENT OF TRANSPORTATION

ROUTE NO.	SECTION	COUNTY	TOTAL SHEETS	SHEET NO.
F.A.I. 39	4VBY	WINNEBAGO	171	64
FED. ROAD DIST. NO. 7	ILLINOIS	FED. AID PROJECT-		

SHEET NO. 13
28 SHEETS

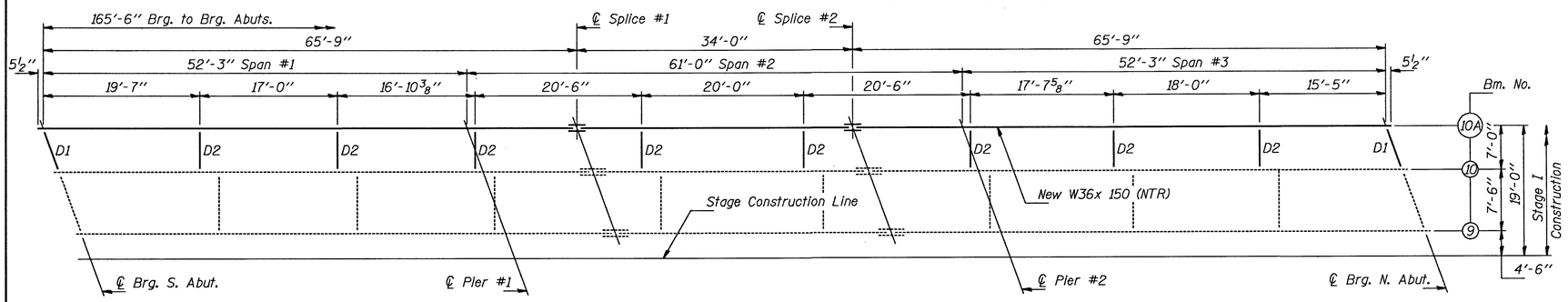

PLAN - WEST BD. LANES

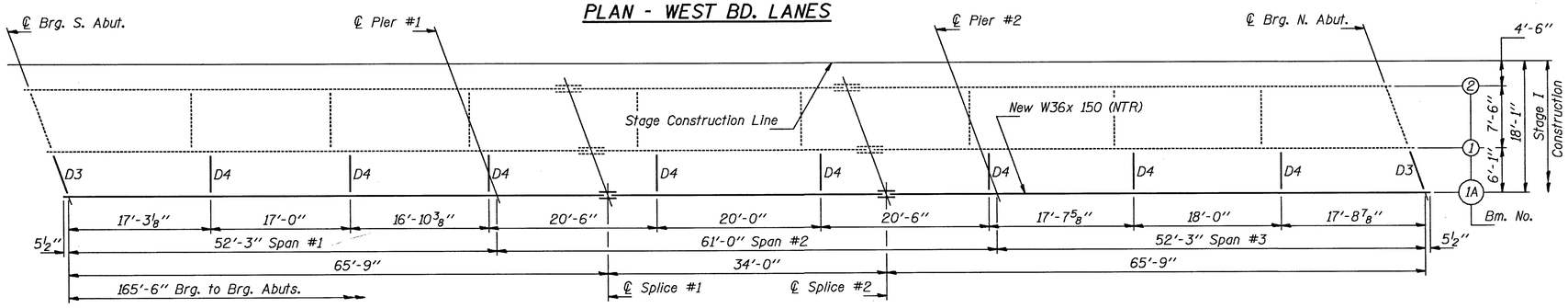

PLAN - EAST BD. LANES

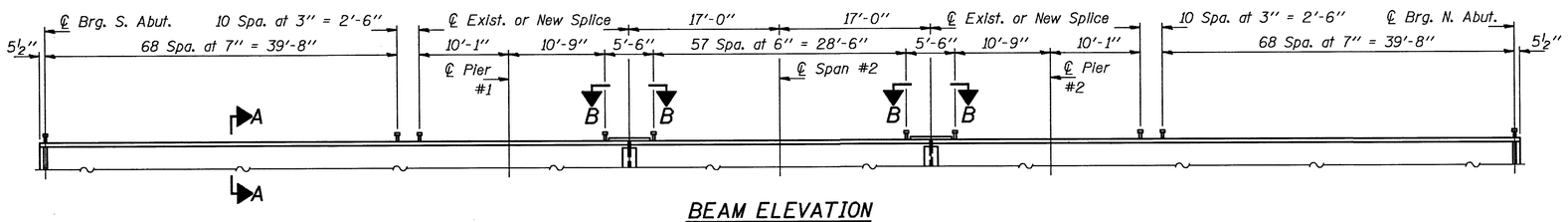

BEAM ELEVATION
(Typ. Stud Shear Connector Spacing for all Beams)

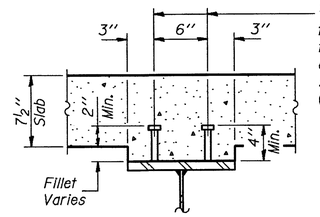

¾"φ Granular or solid flux filled headed studs, conforming to the requirements of Art. 710.38 of the Std. Specs. Automatically end welded to flange. (5,880 Req'd.)

SECTION A-A

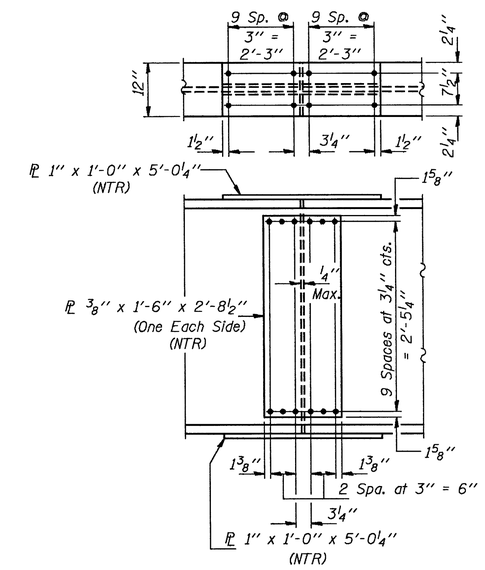

FIELD SPLICE DETAIL
(Use ⅞"φ H.S. Bolts for Flange Plates)
(Use ¾"φ H.S. Bolts for Web Plates)

Note: "NTR" denotes Notch Toughness Requirements.

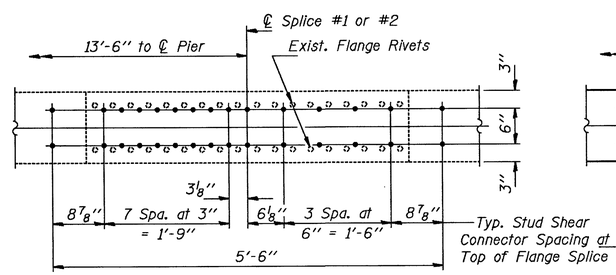

VIEW B-B
(At Existing Beams #2, #3, #4, #7, #8 & #9)

Typ. Stud Shear Connector Spacing at Top of Flange Splice

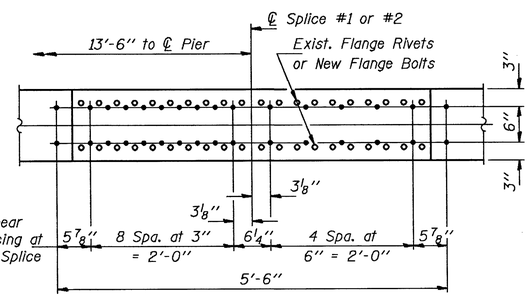

VIEW B-B
(At New Beams #1A, & #10A and at Existing Beams #1, #5, #6 & #10)

DESIGNED Shaker Asfour	May 3 1990
CHECKED Christopher P. Wehrwein	EXAMINED Jaroj J. Kaspar ENGINEER OF BRIDGE DESIGN
DRAWN John F. Schneller Jr.	PASSED Ralph E. Anderson ENGINEER OF BRIDGES AND STRUCTURES
CHECKED SA, CHM	APPROVED DIRECTOR OF HIGHWAYS

STRUCTURAL STEEL
F.A.I. RT. 39 SEC. 4VBY
WINNEBAGO COUNTY
STA. 796+28.52

STATE OF ILLINOIS
DEPARTMENT OF TRANSPORTATION

ROUTE NO.	SECTION	COUNTY	TOTAL SHEETS	SHEET NO.
F.A.I. 39	4VBY	WINNEBAGO	171	65
FED. ROAD DIST. NO. 7		ILLINOIS	FED. AID PROJECT-	

SHEET NO. 14
28 SHEETS

TOP OF BEAM ELEVATIONS

Gir. / Loc.	℄ Brg. S. Abut.	℄ Brg. Pier #1	℄ Splice #1	℄ Splice #2	℄ Brg. Pier #2	℄ Brg. N. Abut.
* New Bm #1A	797.17	796.83	796.75	796.52	796.43	796.10
Exist. Bm #1	796.98	—	—	—	—	795.85
Exist. Bm #2	796.92	—	—	—	—	795.85
Exist. Bm #3	796.86	—	—	—	—	795.79
Exist. Bm #4	796.80	—	—	—	—	795.73
Exist. Bm #5	796.73	—	—	—	—	795.66
Exist. Bm #6	797.12	—	—	—	—	796.08
Exist. Gir #7	797.07	—	—	—	—	796.00
Exist. Bm #8	797.01	—	—	—	—	795.94
Exist. Bm #9	796.95	—	—	—	—	795.88
Exist. Bm #10	796.88	—	—	—	—	795.81
* New Bm #10A	796.88	796.55	796.46	796.23	796.15	795.81

* For Fabrication only. All others for information only.

BEAM MOMENT TABLE

		0.4 Sp. #1 or 0.6 Sp. #3	Piers	0.5 Sp. #2
Is	(in⁴)	9,040	9,040	9,040
Ic	(in⁴)	23,309	—	23,309
Ss	(in³)	504	504	504
Sc	(in³)	726.2	—	726.2
℄	(K/ft.)	.904	.904	.904
* M℄	('K)	180	373	130
s℄	(K/ft.)	.33	—	.33
* Ms℄	('K)	73	—	68
* M⅊	('K)	391	215	394
* M (Imp)	('K)	110	60	106
* Ma (Total)	('K)	574	275	568
* fs℄ non-comp	(k.s.i.)	4.3	8.9	3.1
* fs (comp)	(k.s.i.)	9.5	6.5	9.4
* fs (Total)	(k.s.i.)	13.8	15.4	12.5
* VR	(K)	54.7	—	57.5

* Service Load Values

Is and Ss are the moment of inertia and section modulus of the steel section used in computing fs (Total)

Ic and Sc are the moment of inertia and section modulus of the composite section used in computing fs (Total).

VR is the maximum Live Load + Impact shear range in span.

Ma (Total) = Ms℄ + (M⅊ + I)].

fs (Total) is the sum of the stresses due to [M℄ + Ms℄ + (M⅊ + I)].

M℄ - Moment due to dead loads on non-composite section.

Ms℄ - Moment due to dead loads on composite section.

M⅊ - Moment due to live loads on non-composite or composite section.

I - Live load impact.

BEAM REACTION TABLE

		Abuts.	Piers
R℄	(K)	25	76.7
R⅊	(K)	39.1	46.2
Imp.	(K)	11.1	12.7
R (Total)	(K)	75.2	135.6

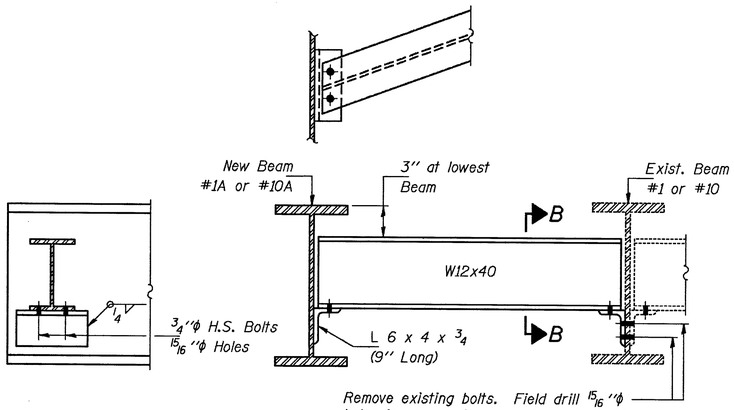

Remove existing bolts. Field drill 15/16"φ holes in new angles using holes in existing beams as a template. Existing bolts are to be replaced by 3/4"φ H.S. Bolt. Cost of Bolt Removal and Field Drilling is incidental to "Structural Steel".

DIAPHRAGM D1 & D3

(D1= 2 Required)
(D3= 2 Required)

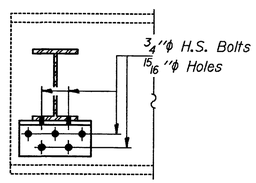

SECTION B-B

Note: Two hardened washers shall be required over all 15/16"φ holes.

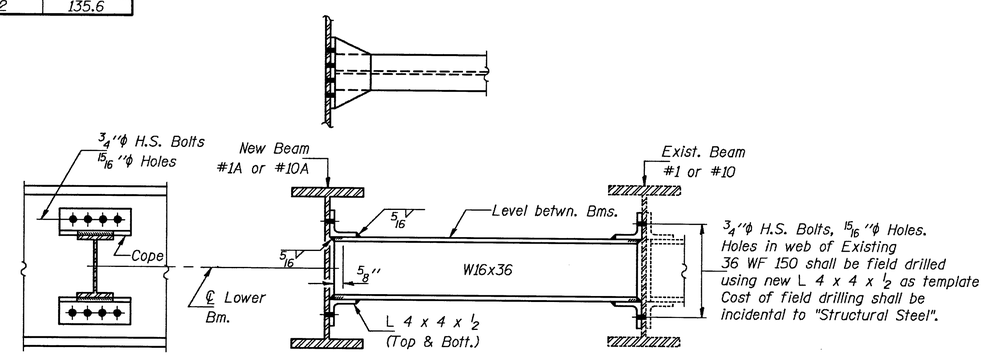

DIAPHRAGM D2 & D4

(D2= 8 Required)
(D4= 8 Required)

DESIGNED	Shaker Asfour
CHECKED	Mustafa A. Mohsen
DRAWN	John F. Schneller Jr.
CHECKED	SA, CHM

May 3 1980
EXAMINED Raj. D. Kaspar
ENGINEER OF BRIDGE DESIGN
PASSED Ralph E. Anderson
ENGINEER OF BRIDGES AND STRUCTURES
APPROVED
DIRECTOR OF HIGHWAYS

I-2-D 8-30-80

STRUCTURAL STEEL
F.A.I. RT. 39 SEC. 4VBY
WINNEBAGO COUNTY
STA. 796+28.52

STATE OF ILLINOIS
DEPARTMENT OF TRANSPORTATION

ROUTE NO.	SECTION	COUNTY	TOTAL SHEETS	SHEET NO.
F.A.I. 39	4VBY	WINNEBAGO	171	66
FED. ROAD DIST. NO. 7	ILLINOIS	FED. AID PROJECT-		

SHEET NO. 15
28 SHEETS

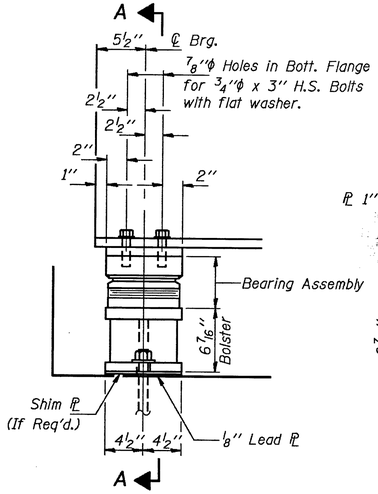

ELEVATION AT ABUT.
(New Beam)

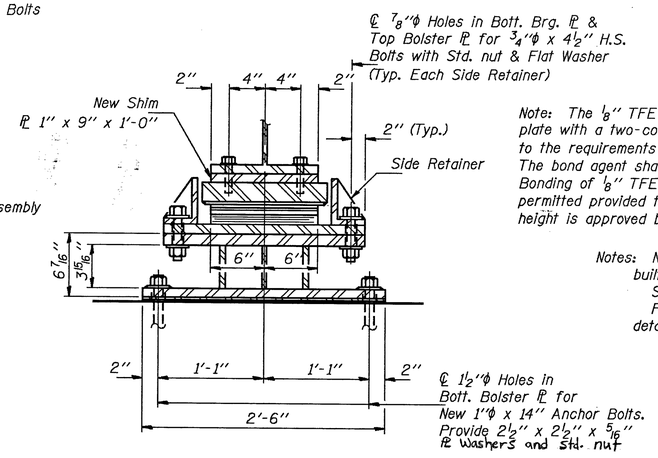

SECTION A-A

TYPE II TFE ELASTOMERIC EXP. BRG.

* Cost of drilling holes in bottom flanges in field is incidental to "Elastomeric Bearing Assembly Type II".

Note: The ⅛" TFE sheet shall be bonded directly to the top steel plate with a two-component, medium viscosity epoxy resin, conforming to the requirements of the Federal Specification MMM-A-134, Type I. The bond agent shall be applied on the full area of the contact surfaces. Bonding of ⅛" TFE sheet during vulcanizing process will be permitted provided the process and method of adjusting assembly height is approved by the Engineer.

Notes: New Anchor Bolts at new bearings may be built into the masonry.
See sheet #18 of 28 for Anchor Bolt installation.
For "Jacking & Removing Existing Bearing" see details on sheet #16 of 28.

DIMENSION "4"

Loc. \ Bm.	#1	#6
S. Abut.	⅝"	½"

Fill plates are to have the same length and hole locations as bearing base plates.

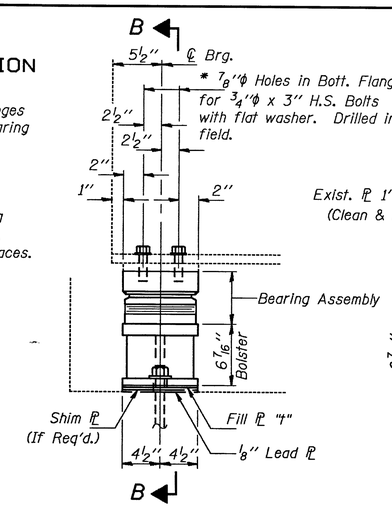

ELEVATION AT ABUT.
(Existing Beams)

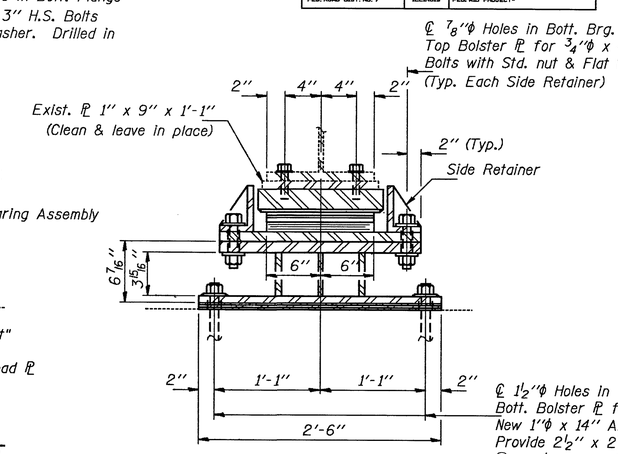

SECTION B-B

TYPE II TFE ELASTOMERIC EXP. BRG.

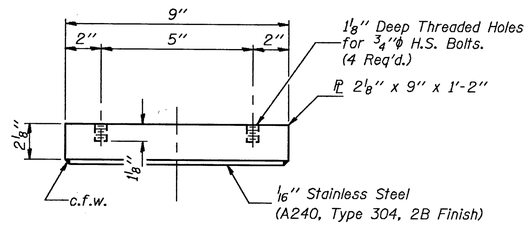

TOP BEARING ASSEMBLY

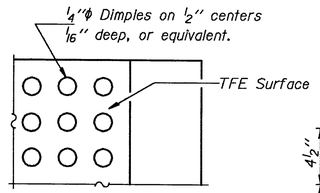

PLAN-TFE SURFACE

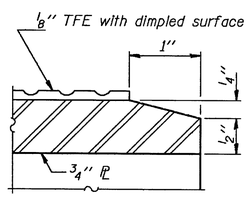

SECTION THRU TFE

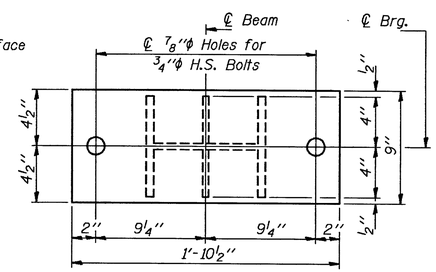

TOP PLATE

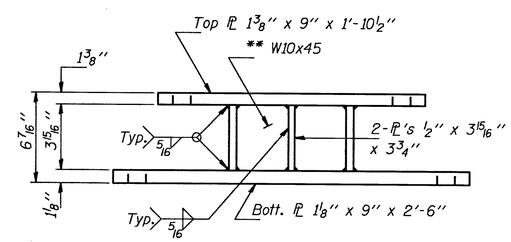

ELEVATION

BOLSTER

** Equivalent welded plates will be allowed in lieu of W10x45.

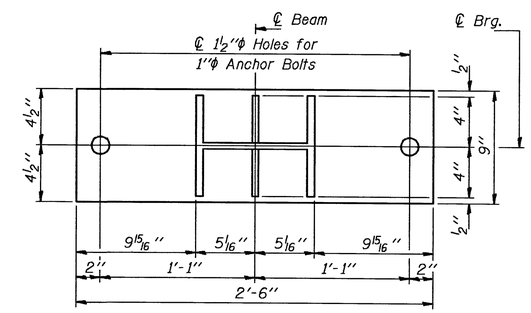

BOTTOM PLATE

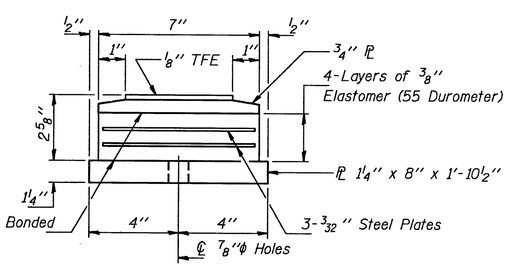

BOTTOM BEARING ASSEMBLY

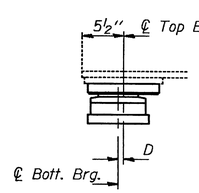

BELOW 50°F.
(Move bott. brg. away from fixed brg.)

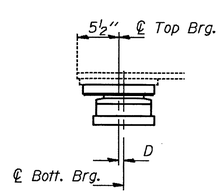

ABOVE 50°F.
(Move bott. brg. toward fixed brg.)

SETTING BOLSTER AT EXP. BRG.

D=⅛" per each 100' of expansion for every 15° temp. change from the normal temp. of 50°F.

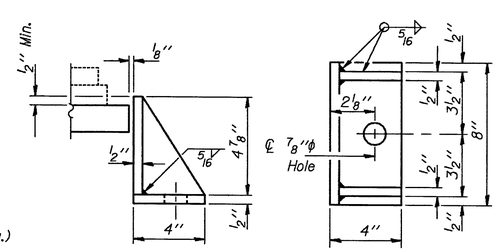

SIDE RETAINER

Equivalent rolled angle with stiffeners will be allowed in lieu of welded plates.

BILL OF MATERIAL

Item	Unit	Total
Elastomeric Bearing Assembly Type II	Each	12
Jack and Remove Existing Bearings	Each	10

BEARING DETAILS
SOUTH ABUTMENT
F.A.I. RT. 39 SEC. 4VBY
WINNEBAGO COUNTY
STA. 796+28.52

DESIGNED Shaker Asfour
CHECKED Christopher A. Welsh
DRAWN John F. Schneller Jr.
CHECKED SA, CMM

May 3 1991
EXAMINED Gregory D. Kaspar — ENGINEER OF BRIDGE DESIGN
PASSED Ralph E. Anderson — ENGINEER OF BRIDGES AND STRUCTURES
APPROVED — DIRECTOR OF HIGHWAYS

I-2-E2 12-1-83

STATE OF ILLINOIS
DEPARTMENT OF TRANSPORTATION

ROUTE NO.	SECTION	COUNTY	TOTAL SHEETS	SHEET NO.
F.A.I. 39	4VBY	WINNEBAGO	171	67
FED. ROAD DIST. NO. 7	ILLINOIS	FED. AID PROJECT-		

SHEET NO. 16
28 SHEETS

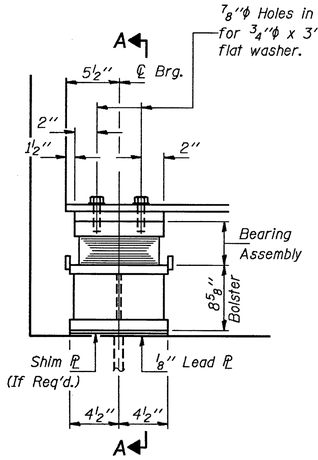

ELEVATION AT ABUT.
(New Beams)

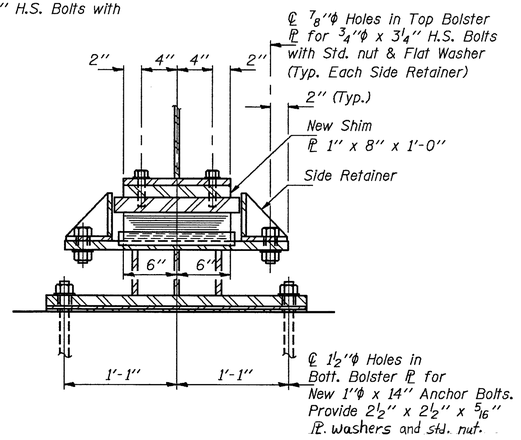

SECTION A-A

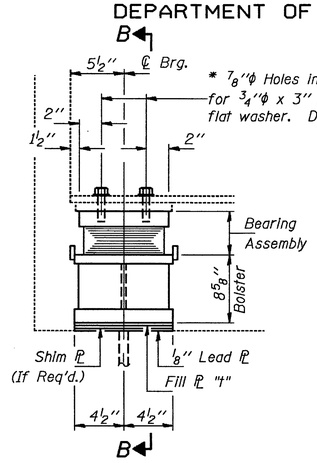

ELEVATION AT ABUT.
(Existing Beams)

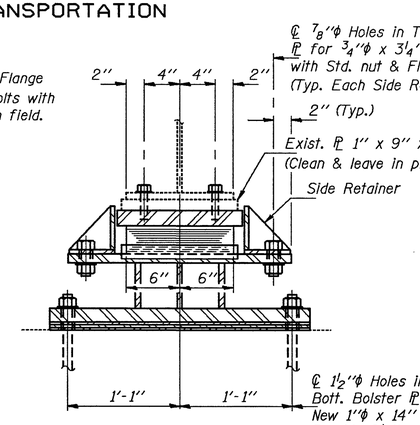

SECTION B-B

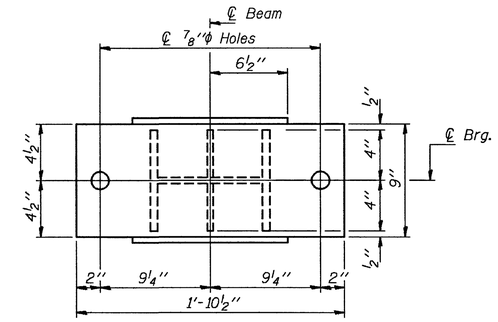

TOP PLATE

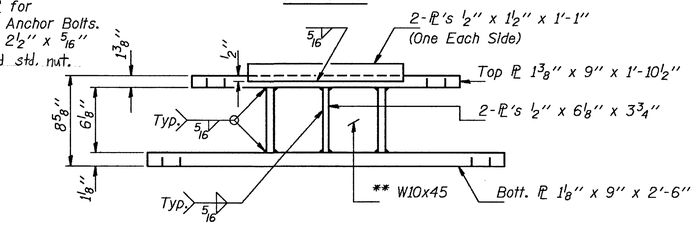

ELEVATION

** Equivalent welded plates will be allowed in lieu of W10x45.

* Cost of drilling holes in bottom flanges in field is incidental to "Elastomeric Bearing Assembly Type 1".

Notes: New Anchor Bolts at new bearings may be built into the masonry.
See sheet #18 of 28 for Anchor Bolt installation.

TYPE I ELASTOMERIC EXP. BRG.

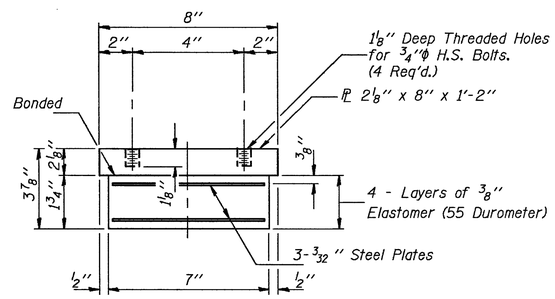

BEARING ASSEMBLY

Note: Shim plates shall not be placed under Bearing Assembly.

DIMENSION "1"

Loc. \ Bm.	#6	#7
N. Abut.	1/2"	5/8"

Fill plates are to have the same length and hole locations as bearing base plates.

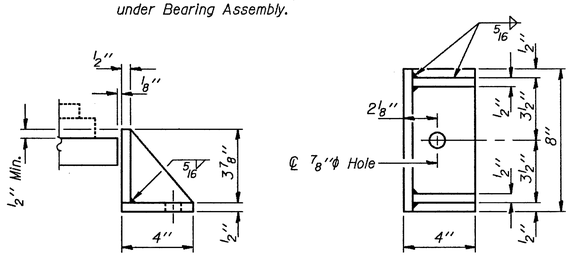

SIDE RETAINER

Equivalent rolled angle with stiffeners will be allowed in lieu of welded plates.

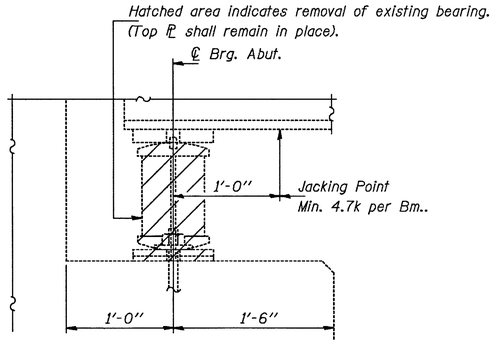

JACK AND REMOVE EXISTING BEARINGS

(Dimensions are at Rt. L's)
(Typ. for all Abutments)

Notes: Jacking, cribbing, and bearing replacement shall occur under Stage Construction with a maximum lift of 1".
The maximum dead load reaction with deck removed (per bearing) at each abutment is 4.7 kips.
Bearing removal and replacement shall be completed before new deck is poured.

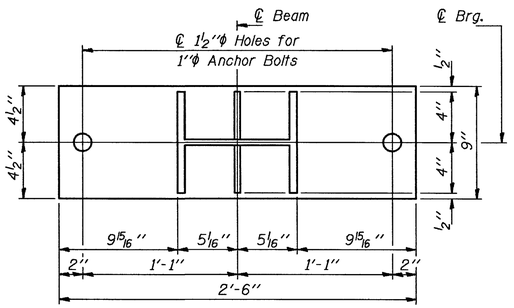

BOTTOM PLATE

BOLSTER

BILL OF MATERIAL

Item	Unit	Total
Elastomeric Bearing Assembly Type I	Each	12
Jack and Remove Existing Bearings	Each	10

BEARING DETAILS
NORTH ABUTMENT
F.A.I. RT. 39 SEC. 4VBY
WINNEBAGO COUNTY
STA. 796+28.52

DESIGNED	Shaker Asfour
CHECKED	Christopher A. Mehuys
DRAWN	John F. Schneller Jr.
CHECKED	SA, CHM

May 3 1990
EXAMINED Raj J. Kaspar ENGINEER OF BRIDGE DESIGN
PASSED Ralph E. Anderson ENGINEER OF BRIDGES AND STRUCTURES
APPROVED DIRECTOR OF HIGHWAYS

I-2-E1 12-1-83

STATE OF ILLINOIS
DEPARTMENT OF TRANSPORTATION

ROUTE NO.	SECTION	COUNTY	TOTAL SHEETS	SHEET NO.
F.A.I. 39	4VBY	WINNEBAGO	171	68
FED. ROAD DIST. NO. 7		ILLINOIS	FED. AID PROJECT-	

SHEET NO. 17
28 SHEETS

NOTES FOR SETTING OF ANCHOR BOLTS AT EXPANSION BEARINGS

a.) D* (Side of brg. away from fixed brg.)
D* = $\frac{1}{8}$'' per each 100' of expansion for every 15° fall below the normal temp. of 50° F.
D** (Side of brg. toward fixed brg.)
D** = $\frac{1}{8}$'' per each 100' of expansion for every 15° rise above the normal temp. of 50° F.

b.) After beams have been erected and dimensions D* & D** determined, holes shall be drilled and anchor bolts shall be installed as shown on Sheet #18 of 28. All fixed anchor bolts may be built into the masonry.

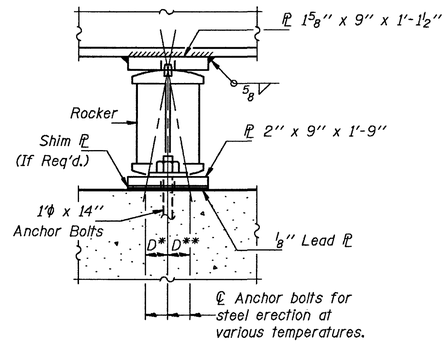

ELEVATION

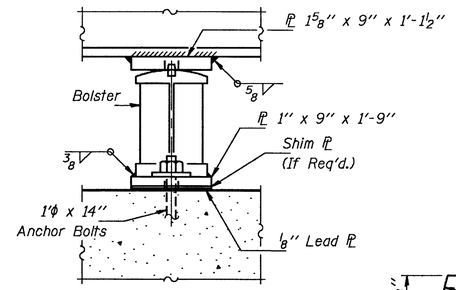

ELEVATION

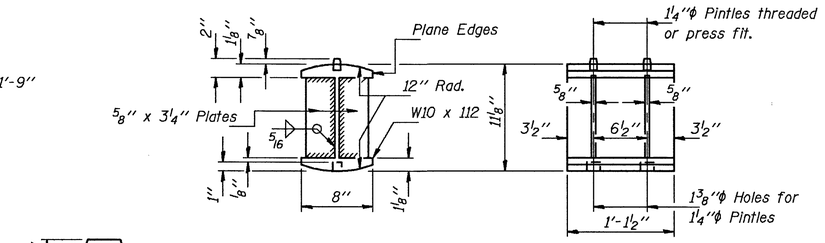

ROCKER

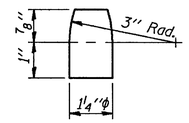

PINTLE

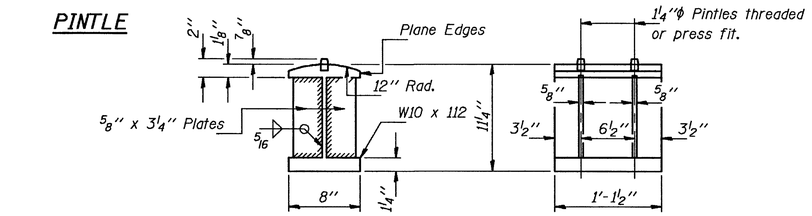

BOLSTER

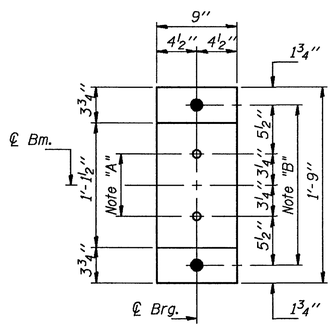

PLAN AT PIERS #1

Note "A"
1 3/8''φ Holes-1'' deep in top PL for 1 1/4''φ Pintles. Thread or press fit pintles in bottom PL.

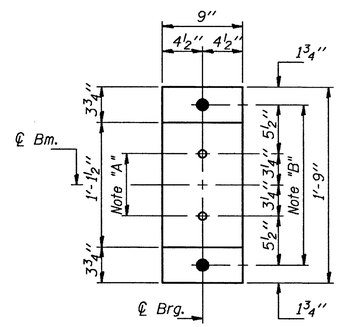

PLAN AT PIERS #2

Note "B"
1 1/2''φ Holes for 1''φ Anchor Bolts-5/16'' x 2 1/2'' x 2 1/2'' PL washer under nut.

BEARING ASSEMBLY DETAILS
(New Beams)

DESIGNED	Shaker Asfour
CHECKED	Christopher P. Mahuya
DRAWN	John F. Schneller Jr.
CHECKED	SA, CHM

I-2-B 12-31-87

May 3 1990
EXAMINED Jaroj S. Kaspar
ENGINEER OF BRIDGE DESIGN
PASSED Ralph E. Anderson
ENGINEER OF BRIDGES AND STRUCTURES
APPROVED
DIRECTOR OF HIGHWAYS

BEARING DETAILS
PIERS
F.A.I. RT. 39 SEC. 4VBY
WINNEBAGO COUNTY
STA. 796+28.52

The Illinois Coil-Lock Anchor Bolt is a proprietary item which is the property of the Illinois Department of Transportation. Use, reproduction or disclosure without express written permission is prohibited and protected under Federal copyright laws. The production and the fabrication of this bolt for use on highway projects in the State of Illinois shall be permitted and there shall be no incurred charges or fees to the manufacturer or the fabricator for producing or fabricating this bolt.

STATE OF ILLINOIS
DEPARTMENT OF TRANSPORTATION

ROUTE NO.	SECTION	COUNTY	TOTAL SHEETS	SHEET NO.
F.A.I. 39	4VBY	WINNEBAGO	171	69
FED. ROAD DIST. NO. 7		ILLINOIS	FED. AID PROJECT-	

SHEET NO. 18
28 SHEETS

D	E	H	K	"d"
1"	1 1/8"	13/16"	1 3/4"	1/4"
1 1/2"	1 5/8"	1 5/16"	2 1/8"	1/2"
2"	2 1/8"	1 13/16"	2 7/8"	1/2"
2 1/2"	2 5/8"	2 5/16"	3 3/8"	1"

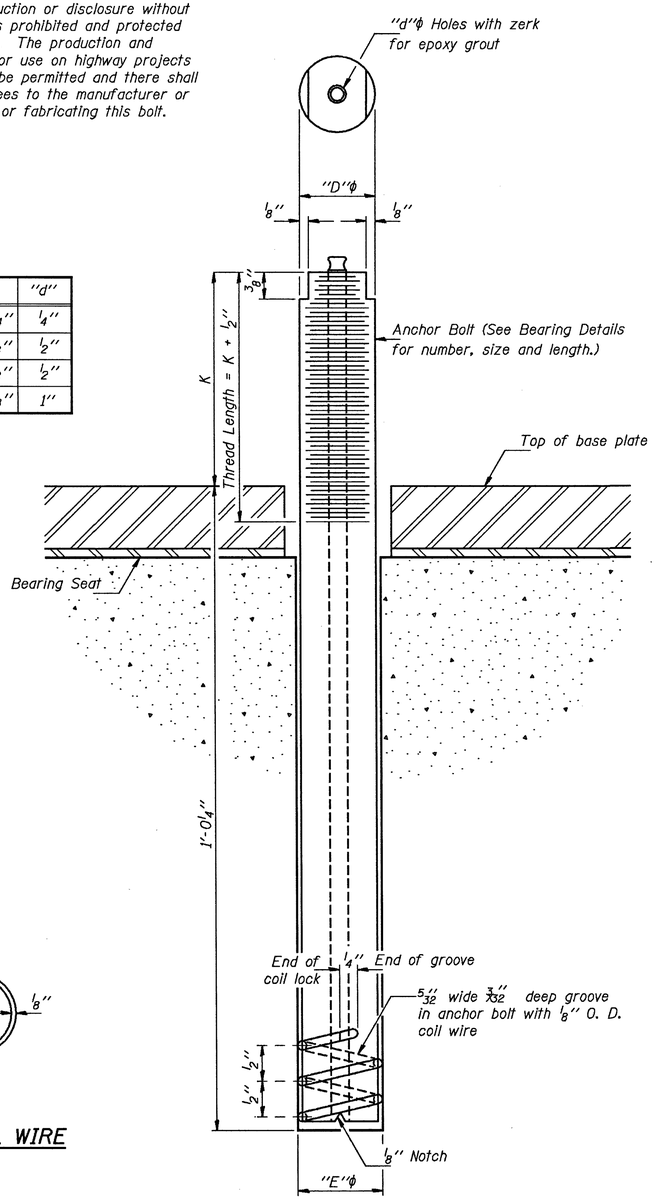

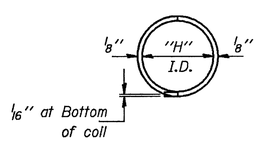

PLAN-COIL WIRE

ILLINOIS COIL-LOCK ANCHOR BOLT

MATERIALS FOR ILLINOIS COIL-LOCK ANCHOR BOLT

The anchor bolt shall be fabricated from cold drawn or hot finished seamless carbon steel mechanical tubing conforming to ASTM A519, Grade 1026 and supplied with hexagonal nuts and cut washers.

The coil wire shall be made of any suitable soft steel wire.

The finished anchor bolt shall be cleaned of rust and other foreign materials and wrapped or packaged to prevent contamination until they are installed.

The epoxy grout shall be a two-component, epoxy resin bonding system comforming to ASTM C881, Type I, Grade 1 and of a Class suitable for the temperature at installation.

INSTALLATION PROCEDURE for the ILLINOIS COIL-LOCK ANCHOR BOLT

1. With the coil wire in place,the bolt shall be inserted into the hole and turned clockwise to a snug fit in the hole. Nut and washer shall be placed on the bolt. The nut shall be tensioned until the steel base plates are held securely to the concrete bearing seat.
2. Epoxy grout shall be pumped through the zerk fitting with a pressure gun. Pumping shall continue until the epoxy overflows the hole around the bolt shank. After pumping is discontinued, excess epoxy shall be immediately wiped off.

ALTERNATE ANCHOR BOLTS

The Contractor may use, at his option, the capsule or the adhesive cartridge type anchor rods that have been previously tested and given a prior approval by the Department. The Contractor shall install these anchor rods in pre-drilled holes in accordance with the manufacturer's recommendations and procedures.

The capsule or the adhesive cartridge type anchor rods shall be a two part system composed of:

1. A threaded rod stud with nut and washer conforming to ASTM A307.
2. A sealed glass capsule or a sealed glass adhesive cartridge containing premeasured amounts of the adhesive chemical.

GENERAL NOTES

Holes in the masonry for anchor bolts shall be drilled through the base plates to the diameter and depth shown or in accordance with the manufacturer's recommendation after beams or girders have been erected and adjusted.

Prior to setting the bolts, the holes shall be dry and all dust and loose particles shall be removed by the use of compressed air or vacuuming.

The anchor bolts, furnished and installed and including the epoxy grout or capsules shall not be paid for separately but shall be included in the unit bid price for "Furnishing and Erecting Structural Steel".

DESIGNED Shaker Asfour
CHECKED Christopher H. Mehnert
DRAWN John F. Schneller Jr.
CHECKED SA, CHM

May 3 1990
EXAMINED Raj S. Kaspar
ENGINEER OF BRIDGE DESIGN
PASSED Ralph E. Anderson
ENGINEER OF BRIDGES AND STRUCTURES
APPROVED
DIRECTOR OF HIGHWAYS

ABB-1 12-1-83

ANCHOR BOLT DETAILS
FOR BEARINGS
F.A.I. RT. 39 SEC. 4VBY
WINNEBAGO COUNTY
STA. 796+28.52

ROUTE NO.	SECTION	COUNTY	TOTAL SHEETS	SHEET NO.
F.A.I. 39	4VBY	WINNEBAGO	171	70
FED. ROAD DIST. NO. 7	ILLINOIS	FED. AID PROJECT-		

SHEET NO. 19
28 SHEETS

STATE OF ILLINOIS
DEPARTMENT OF TRANSPORTATION

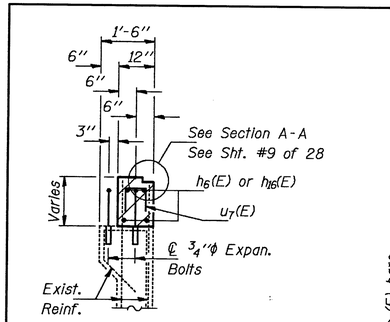

SECTION B-B

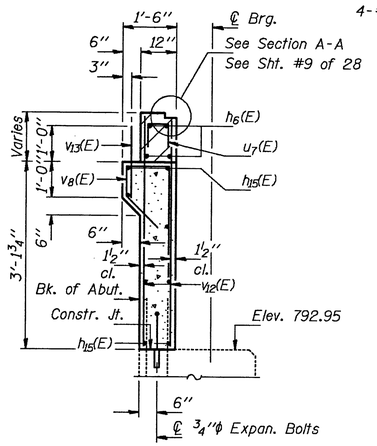

SECTION C-C

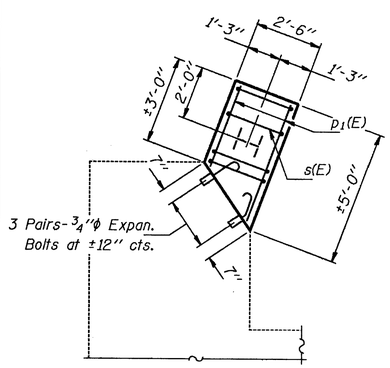

FOOTING PLAN
(East Wing)

** Bonded Construction Joint in accordance with Article 504.13(a)(2) of the Standard Specifications..

* Elevations are given at back face of hatched block.

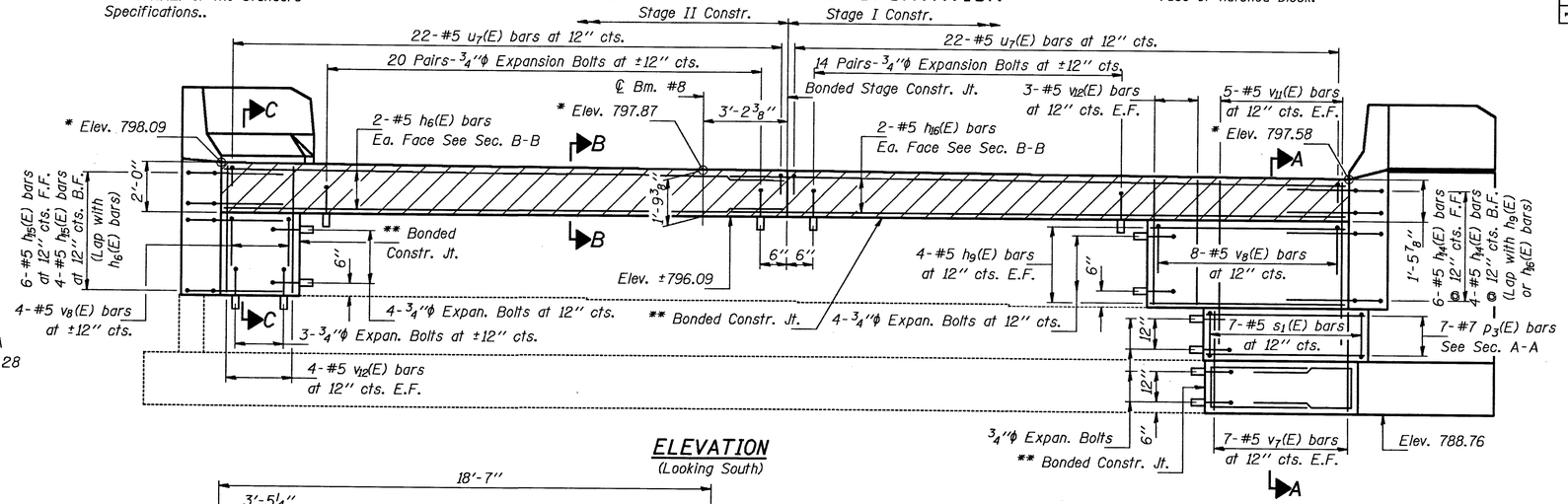

ELEVATION
(Looking South)

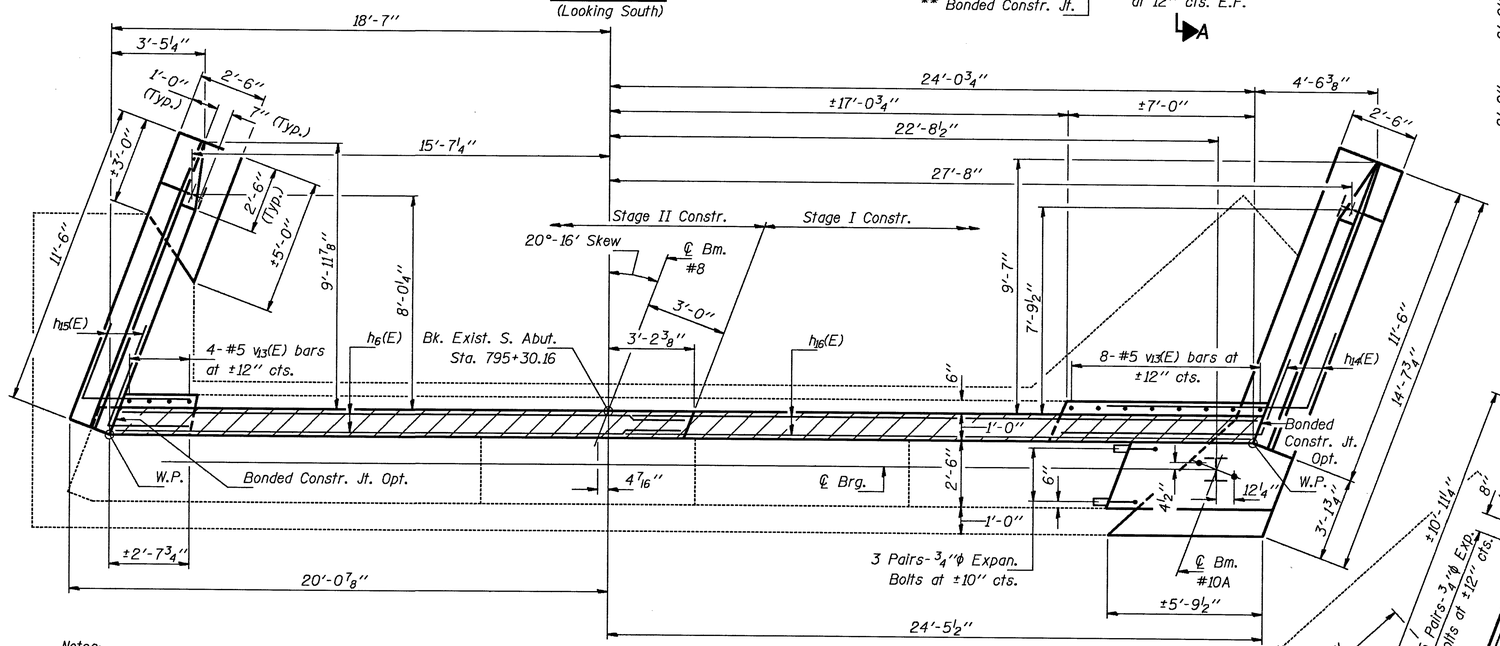

PLAN

Notes:

Hatched area to be poured after Superstructure forms have been removed. Form top surface to match superstructure. Concrete quantity is billed with "Class X Concrete Superstructure" see sheet #9 of 28.

Existing reinforcement extending into new construction shall be cleaned, straightened, and incorporated into new construction. Cost Incidental to "Concrete Removal".

Existing reinforcement not extending into new construction shall be cut off and covered with a 2" layer of cement grout cost incidental to "Concrete Removal".

Space reinforcement in cap to miss anchor bolts.

Reinforcement bars designated (E) shall be epoxy coated.

For Wingwall Details and Bill of Material see sheet #21 of 28.

For Anchor Bolt installation details see sheet #18 of 28.

All edges shall have standard ¾" chamfer except as noted.

See sheet #27 of 28 for locations of Concrete Removal.

PILE DATA

Type: Steel HP10 x 42
Capacity: 35 Ton Design Load (Max.)
Driven to 53 Ton
Est. Length: 32 Ft.
No. Required: 2 + 1 Test Pile

MIN. BAR LAPS

#5 (E) bars = 2'-2"

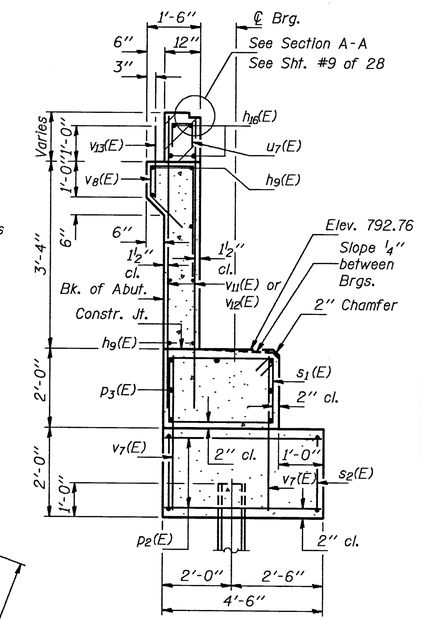

SECTION A-A

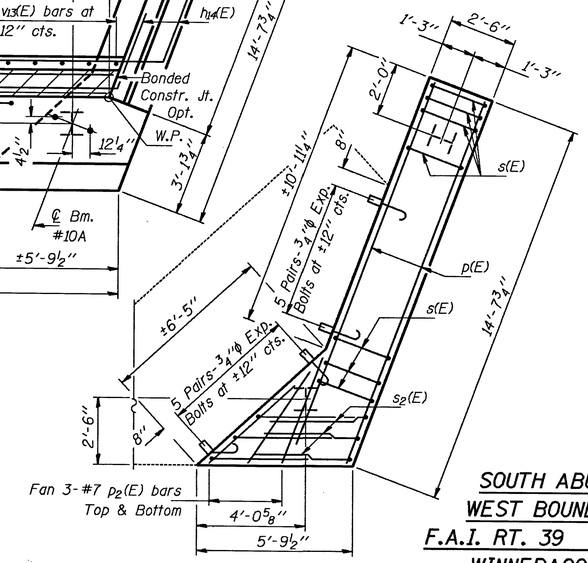

FOOTING PLAN
(West Wing)

DESIGNED	Shakir Asfour
CHECKED	Christopher H. Waknup
DRAWN	John F. Schneller Jr.
CHECKED	SA, CHM

May 3 1996

EXAMINED Graj J. Kaspar
ENGINEER OF BRIDGE DESIGN

PASSED Ralph E. Anderson
ENGINEER OF BRIDGES AND STRUCTURES

APPROVED
DIRECTOR OF HIGHWAYS

SOUTH ABUTMENT
WEST BOUND LANES
F.A.I. RT. 39 SEC. 4 VBY
WINNEBAGO COUNTY
STA. 796+28.52

ROUTE NO.	SECTION	COUNTY	TOTAL SHEETS	SHEET NO.
F.A.I. 39	4VBY	WINNEBAGO	171	71
FED. ROAD DIST. NO. 7		ILLINOIS	FED. AID PROJECT-	

SHEET NO. 20
28 SHEETS

STATE OF ILLINOIS
DEPARTMENT OF TRANSPORTATION

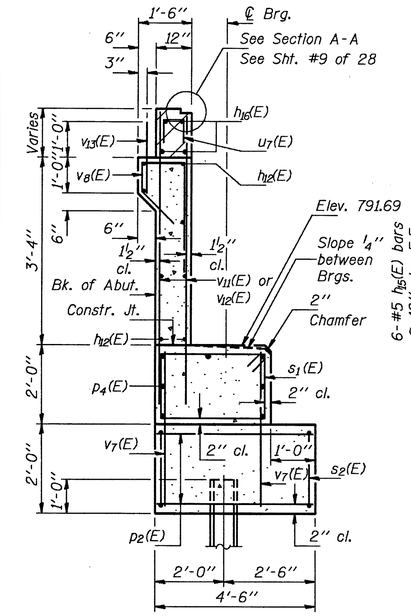

SECTION A-A

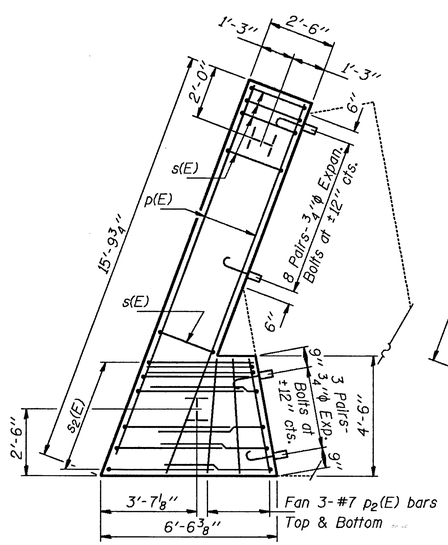

FOOTING PLAN
(West Wing)

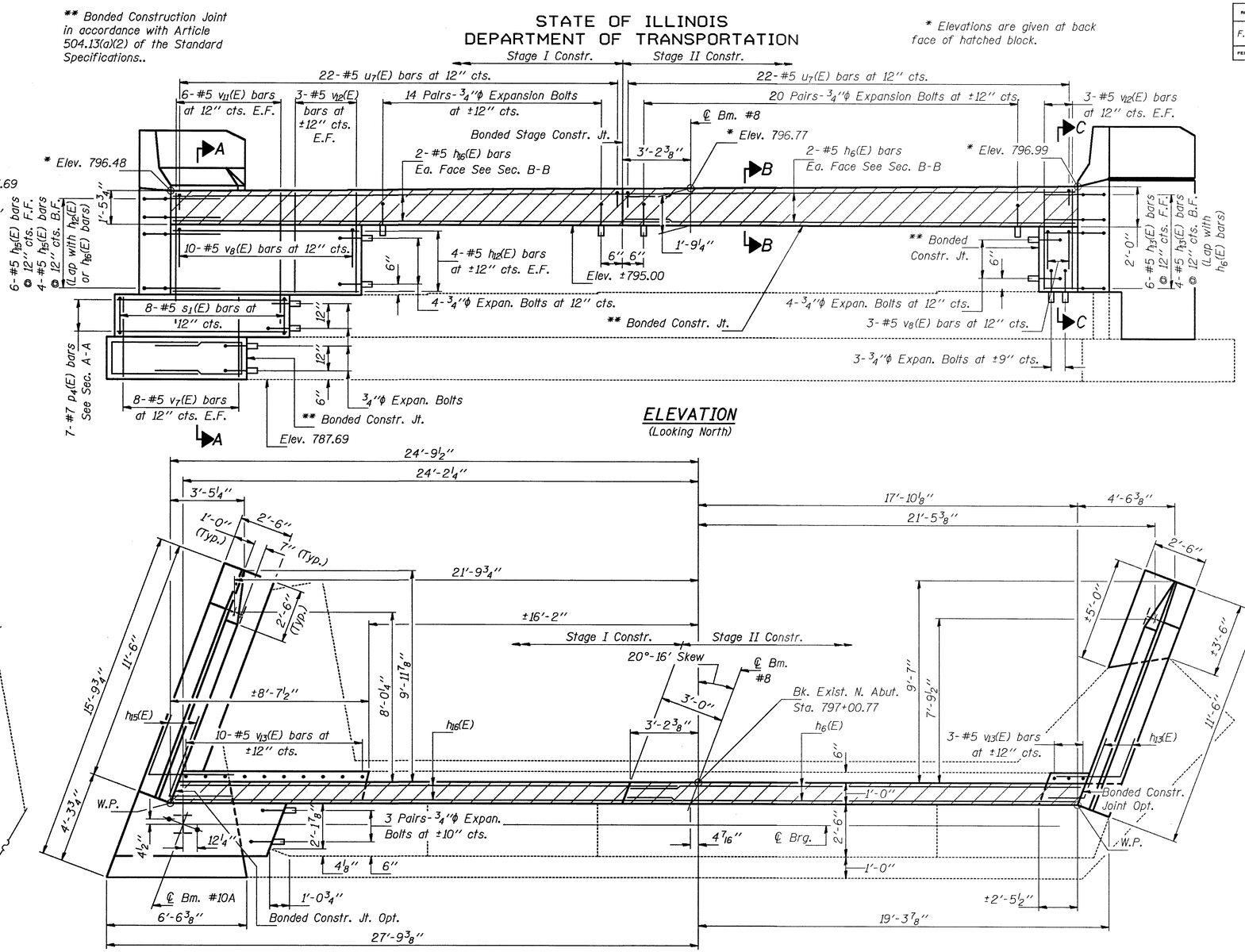

ELEVATION
(Looking North)

PLAN

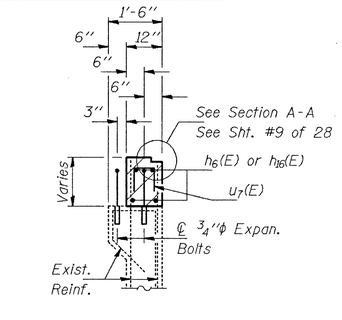

SECTION B-B

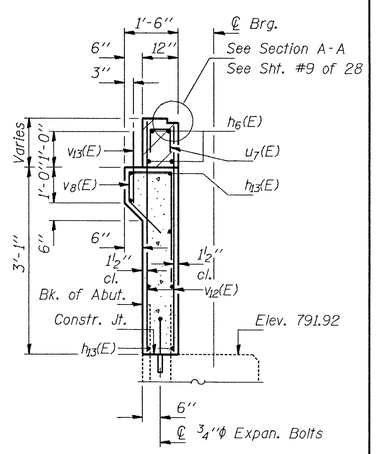

SECTION C-C

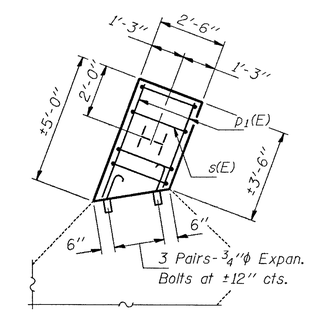

FOOTING PLAN
(East Wing)

Notes:

Hatched area to be poured after Superstructure forms have been removed. Form top surface to match superstructure. Concrete quantity is billed with "Class X Concrete Superstructure" see sheet #9 of 28.

Existing reinforcement extending into new construction shall be cleaned, straightened, and incorporated into new construction. Cost Incidental to "Concrete Removal".

Existing reinforcement not extending into new construction shall be cut off and covered with a 2" layer of cement grout cost incidental to "Concrete Removal".

Space reinforcement in cap to miss anchor bolts.
Reinforcement bars designated (E) shall be epoxy coated.
For Wingwall Details and Bill of Material see sheet #21 of 28.
For Anchor Bolt installation details see sheet #18 of 28.
All edges shall have standard ¾" chamfer except as noted.

Note: See sheet #27 of 28 for locations of Concrete Removal.

PILE DATA

Type: Steel HP10 x 42
Capacity: 35 Ton Design Load (Max.)
Driven to 53 Ton
Est. Length: 44 Ft.
No. Required: 3

MIN. BAR LAPS

#5 (E) bars = 2'-2"

DESIGNED Shaker Ashour
CHECKED [signature]
DRAWN John F. Schneller Jr.
CHECKED SA, CHM

May 3 1990
EXAMINED [signature] ENGINEER OF BRIDGE DESIGN
PASSED [signature] ENGINEER OF BRIDGES AND STRUCTURES
APPROVED DIRECTOR OF HIGHWAYS

NORTH ABUTMENT
WEST BOUND LANES
F.A.I. RT. 39 SEC. 4 VBY
WINNEBAGO COUNTY
STA. 796+28.52

ROUTE NO.	SECTION	COUNTY	TOTAL SHEETS	SHEET NO.
F.A.I. 39	4VBY	WINNEBAGO	171	72
FED. ROAD DIST. NO. 7	ILLINOIS	FED. AID PROJECT-		

SHEET NO. 21
28 SHEETS

STATE OF ILLINOIS
DEPARTMENT OF TRANSPORTATION

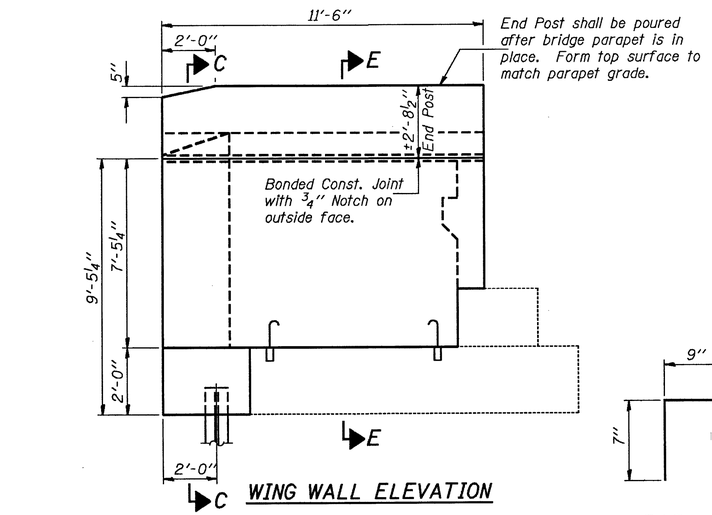

WING WALL ELEVATION

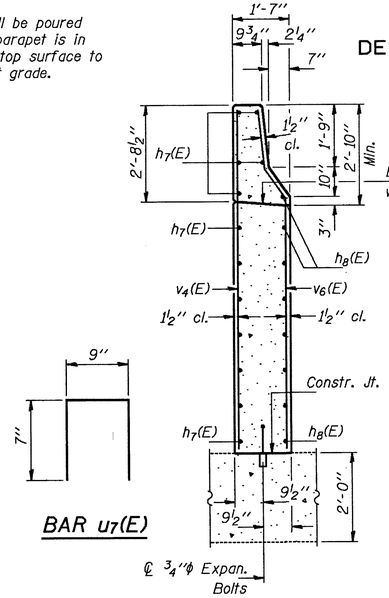

SECTION E-E

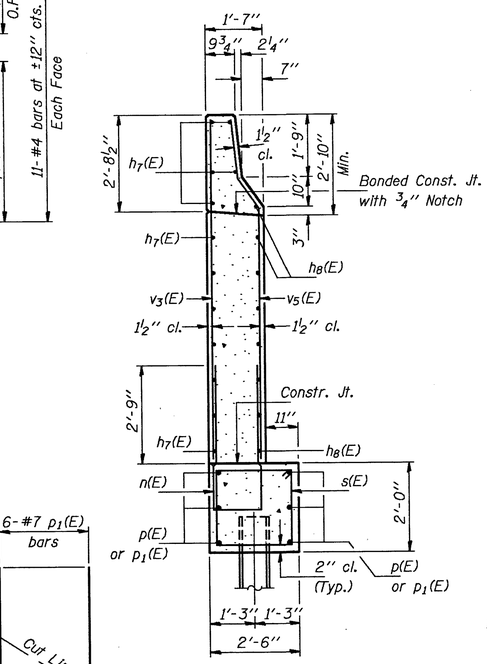

SECTION C-C

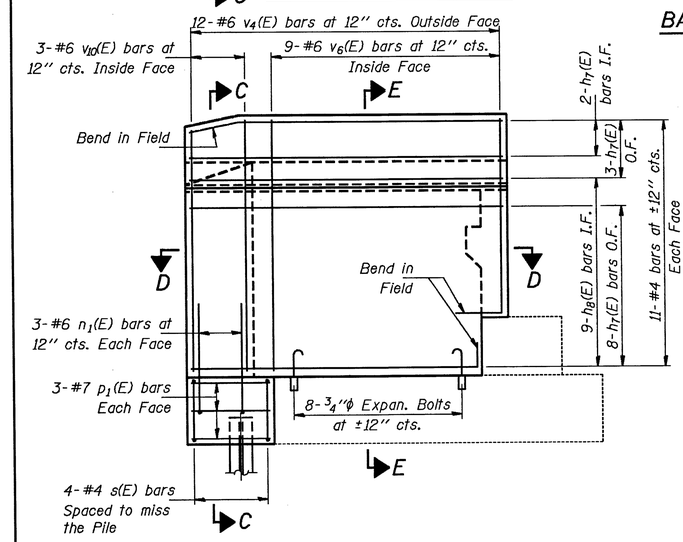

WING WALL ELEVATION
Reinforcement

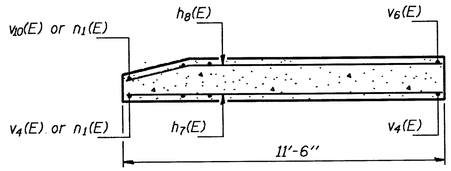

SECTION D-D

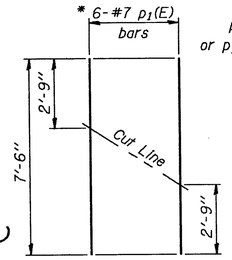

CUTTING DIAGRAM

* Order $p_1(E)$ bars full length. Cut to fit as shown and use remainder of bars in other footing.

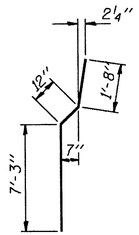

BAR v6(E)

BAR u7(E)

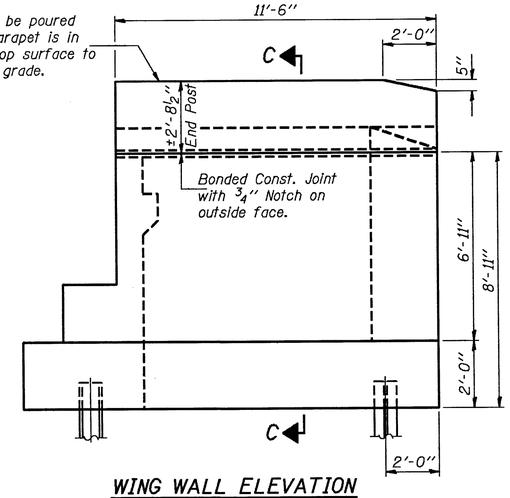

WING WALL ELEVATION

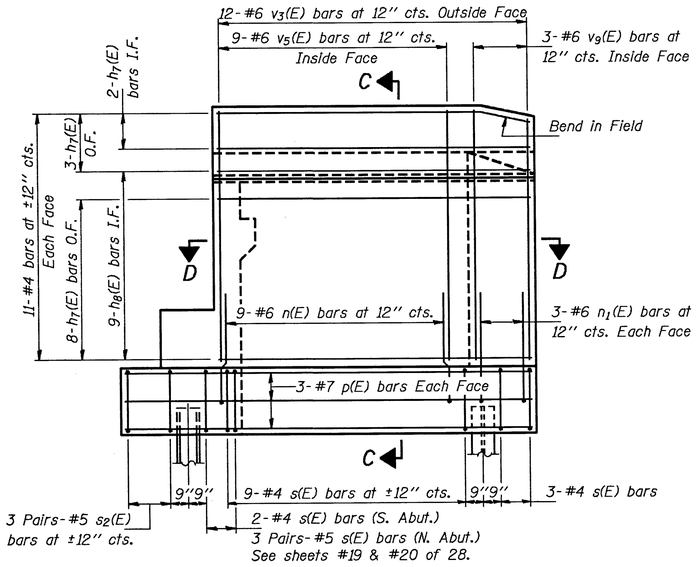

WING WALL ELEVATION
Reinforcement

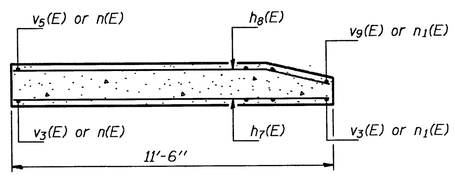

SECTION D-D

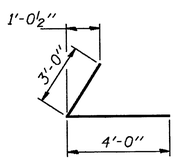

BAR h15(E)

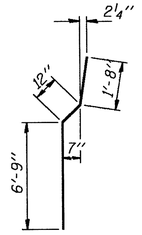

BAR v5(E)

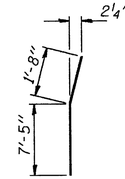

BAR v9(E)

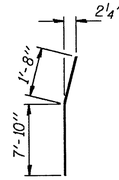

BAR v10(E)

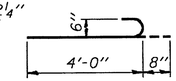

BAR n1(E)

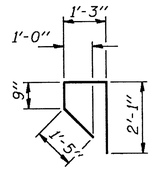

BAR v8(E)

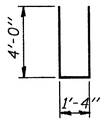

BAR n(E)

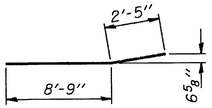

BAR h8(E)

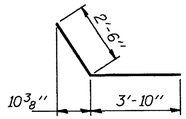

BAR h13(E)

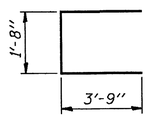

BAR s2(E)

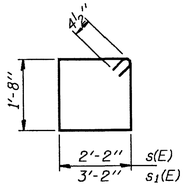

BARS s(E) & s1(E)

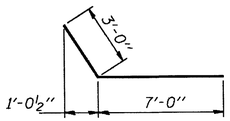

BAR h14(E)

TWO ABUTMENTS BILL OF MATERIAL

Bar	No.	Size	Length	Shape
h6(E)	8	#5	21'-1"	
h7(E)	52	#4	11'-3"	
h8(E)	36	#4	11'-2"	
h9(E)	8	#5	7'-1"	
h12(E)	8	#5	7'-10"	
h13(E)	10	#5	6'-4"	
h14(E)	10	#5	10'-0"	
h15(E)	20	#5	7'-0"	
h16(E)	8	#5	23'-1"	
n(E)	18	#6	9'-4"	
n1(E)	12	#6	4'-8"	
p(E)	12	#7	14'-5"	
p1(E)	6	#7	7'-6"	
p2(E)	12	#7	4'-3"	
p3(E)	7	#7	5'-11"	
p4(E)	7	#7	7'-0"	
s(E)	34	#4	8'-5"	
s1(E)	15	#4	10'-5"	
s2(E)	18	#5	9'-2"	
u7(E)	88	#5	1'-11"	
v3(E)	24	#6	9'-5"	
v4(E)	24	#6	9'-11"	
v5(E)	18	#6	9'-5"	
v6(E)	18	#6	9'-11"	
v7(E)	30	#5	3'-8"	
v8(E)	25	#5	5'-6"	
v9(E)	6	#6	9'-1"	
v10(E)	6	#6	9'-6"	
v11(E)	22	#5	5'-10"	
v12(E)	26	#5	4'-6"	
v13(E)	25	#5	1'-9"	
Class X Concrete			Cu. Yds.	38.5
Reinforcement Bars (Epoxy Coated)			Lbs.	5,130
Steel Piles HP10 x 42			Lin. Ft.	196
Test Piles Steel HP10 x 42			Each	1
Structure Excavation			Cu. Yds.	50
Expansion Bolts ¾"φ			Each	240

DESIGNED	Shaker Asfour
CHECKED	Christopher A. Wehrung
DRAWN	John F. Schneller Jr.
CHECKED	SA, CHW

May 3 1970

EXAMINED Graj S. Kaspar
ENGINEER OF BRIDGE DESIGN

PASSED Ralph E. Anderson
ENGINEER OF BRIDGES AND STRUCTURES

APPROVED
DIRECTOR OF HIGHWAYS

ABUTMENT DETAILS
WEST BOUND LANES
F.A.I. RT. 39 SEC. 4 VBY
WINNEBAGO COUNTY
STA. 796+28.52

ROUTE NO.	SECTION	COUNTY	TOTAL SHEETS	SHEET NO.
F.A.I. 39	4VBY	WINNEBAGO	171	73
FED. ROAD DIST. NO. 7		ILLINOIS	FED. AID PROJECT-	

SHEET NO. 22
28 SHEETS

STATE OF ILLINOIS
DEPARTMENT OF TRANSPORTATION

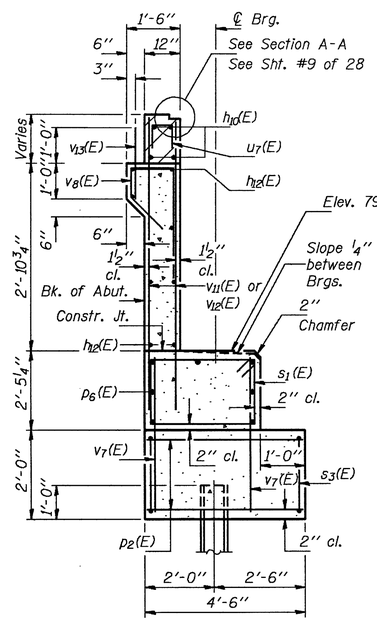

SECTION A-A

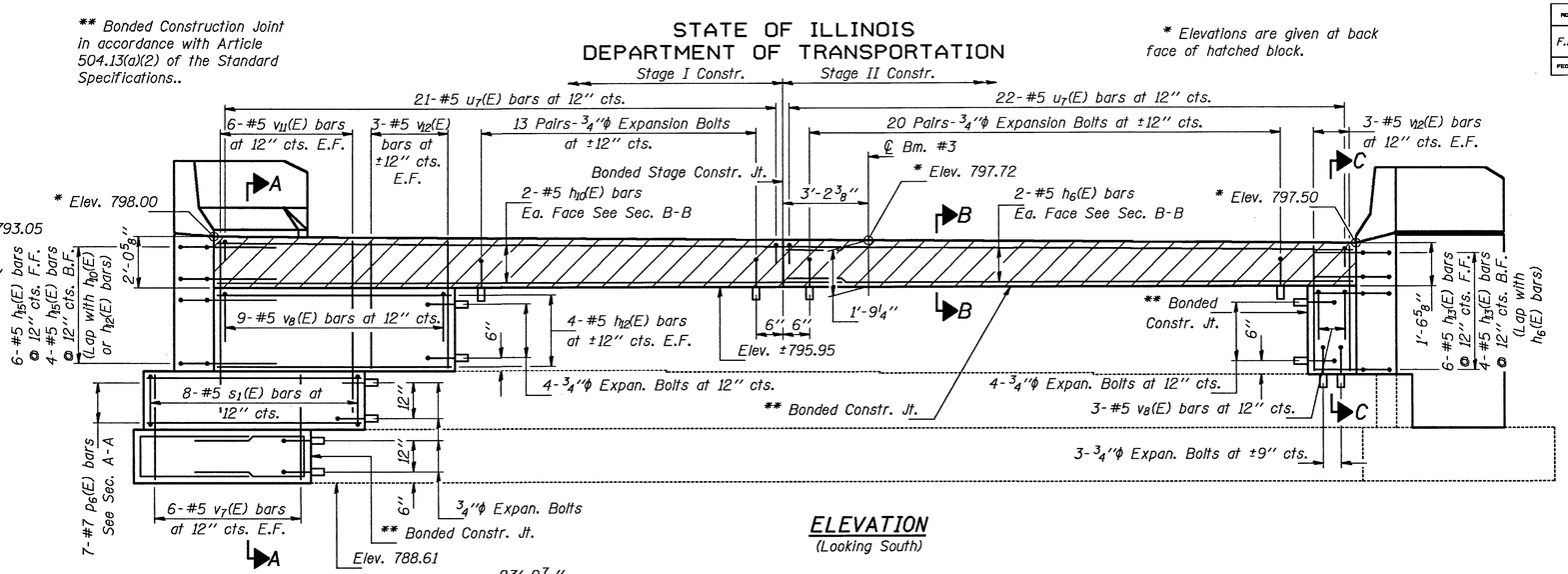

ELEVATION
(Looking South)

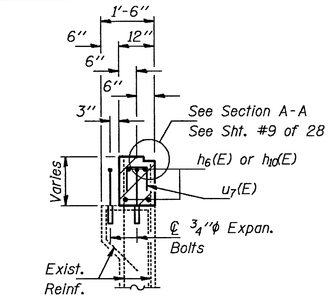

SECTION B-B

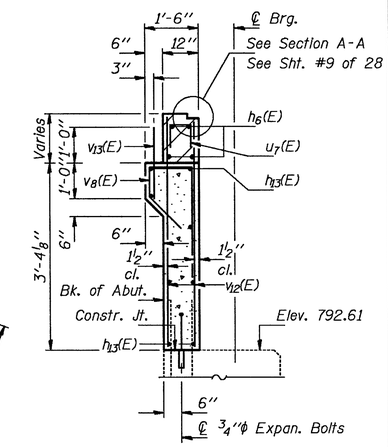

SECTION C-C

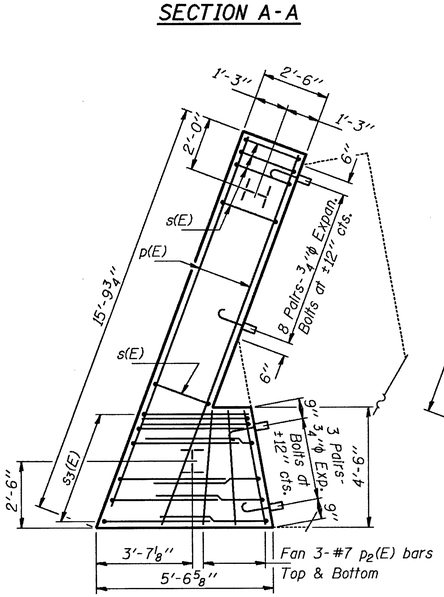

FOOTING PLAN
(East Wing)

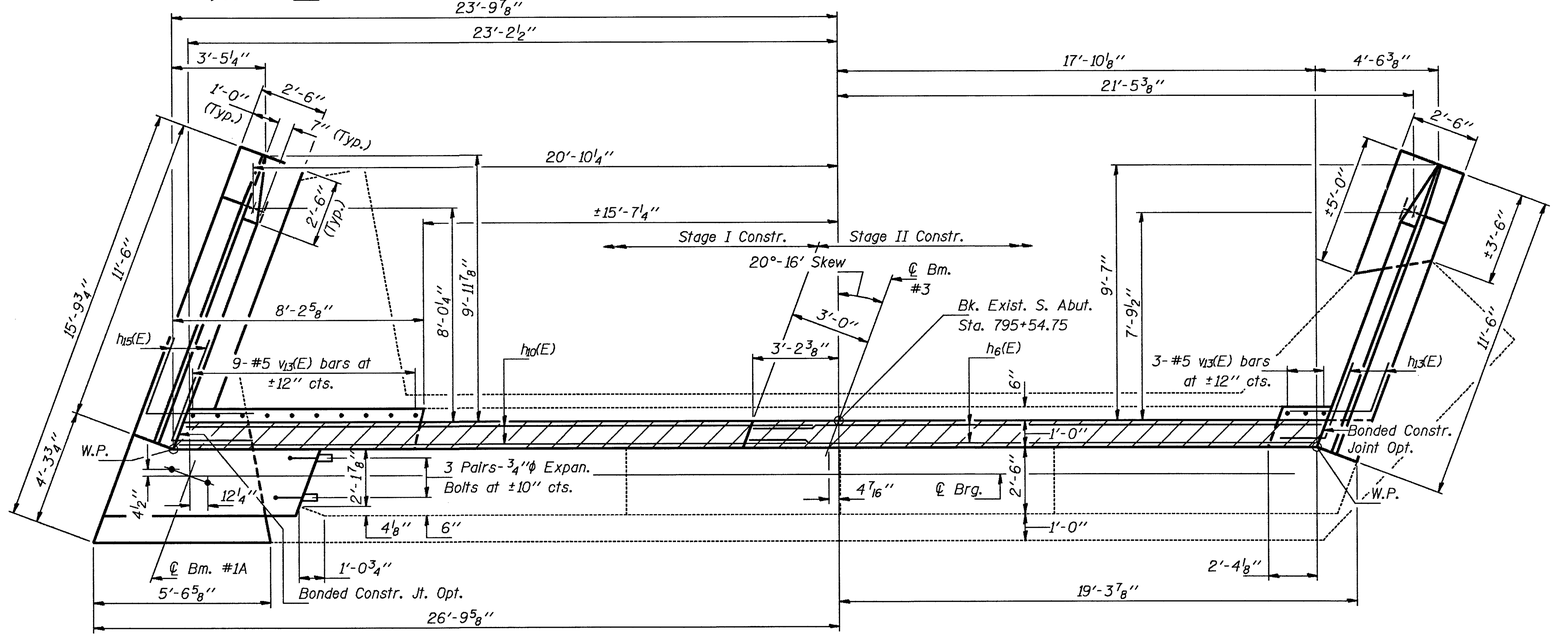

PLAN

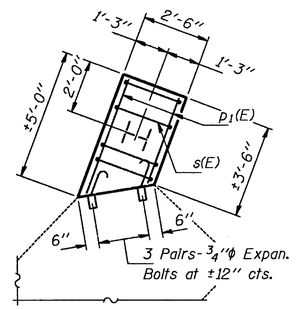

FOOTING PLAN
(West Wing)

Notes:

Hatched area to be poured after Superstructure forms have been removed. Form top surface to match superstructure. Concrete quantity is billed with "Class X Concrete Superstructure" see sheet #9 of 28.

Existing reinforcement extending into new construction shall be cleaned, straightened, and incorporated into new construction. Cost Incidental to "Concrete Removal".

Existing reinforcement not extending into new construction shall be cut off and covered with a 2" layer of cement grout cost incidental to "Concrete Removal".

Space reinforcement in cap to miss anchor bolts.

Reinforcement bars designated (E) shall be epoxy coated.

For Wingwall Details and Bill of Material see sheet #24 of 28.

For Anchor Bolt Installation details see sheet #18 of 28.

All edges shall have standard 3/4" chamfer except as noted.

Note: See sheet #28 of 28 for locations of Concrete Removal.

PILE DATA

Type: Steel HP10 x 42
Capacity: 35 Ton Design Load (Max.)
Driven to 53 Ton
Est. Length: 32 Ft.
No. Required: 3

MIN. BAR LAPS

#5 (E) bars = 2'-2"

DESIGNED	Shaker Asfour
CHECKED	Christopher A. Mikrut
DRAWN	John F. Schneller Jr.
CHECKED	SA, CMM

May 3 1990

EXAMINED Raj S. Kaspar — ENGINEER OF BRIDGE DESIGN

PASSED Ralph E. Anderson — ENGINEER OF BRIDGES AND STRUCTURES

APPROVED — DIRECTOR OF HIGHWAYS

SOUTH ABUTMENT
EAST BOUND LANES
F.A.I. RT. 39 SEC. 4 VBY
WINNEBAGO COUNTY
STA. 796+28.52

ROUTE NO.	SECTION	COUNTY	TOTAL SHEETS	SHEET NO.
F.A.I. 39	4VBY	WINNEBAGO	171	74
FED. ROAD DIST. NO. 7	ILLINOIS	FED. AID PROJECT-		

SHEET NO. 23
28 SHEETS

STATE OF ILLINOIS
DEPARTMENT OF TRANSPORTATION

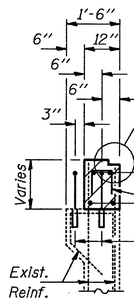

SECTION B-B

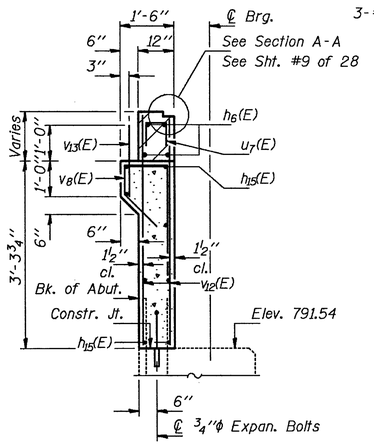

SECTION C-C

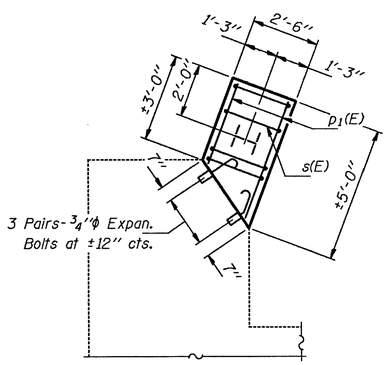

FOOTING PLAN
(West Wing)

** Bonded Construction Joint in accordance with Article 504.13(a)(2) of the Standard Specifications..

* Elevations are given at back face of hatched block.

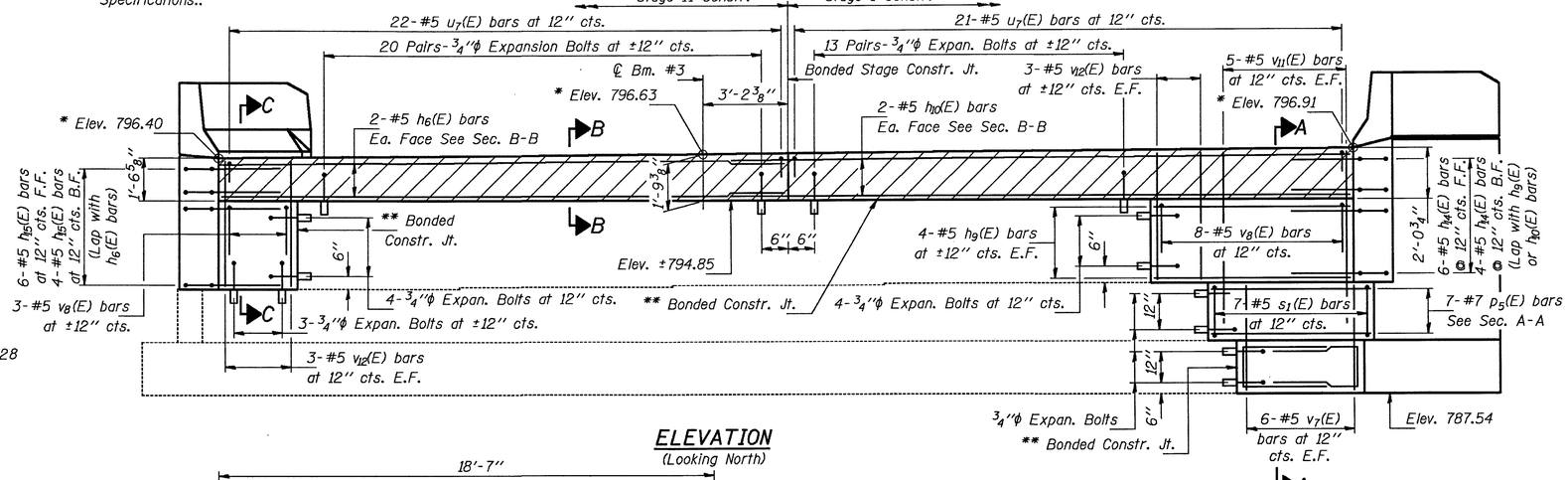

ELEVATION
(Looking North)

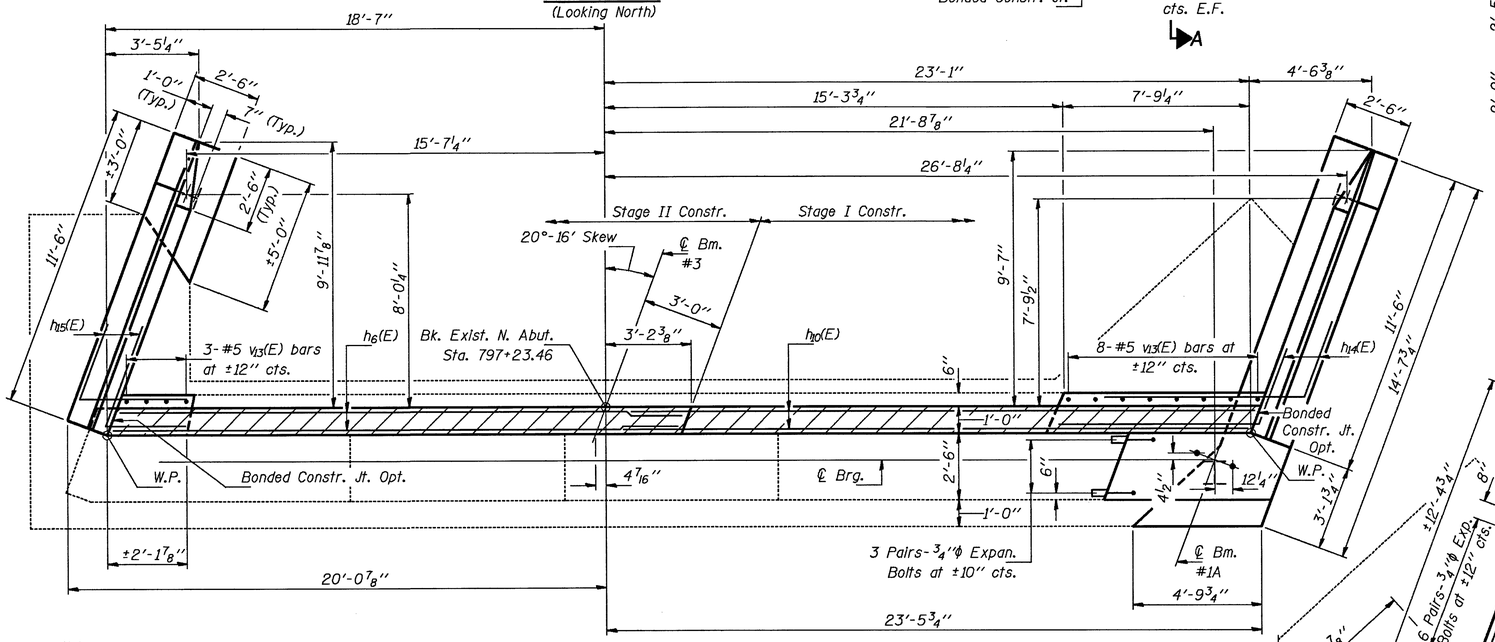

PLAN

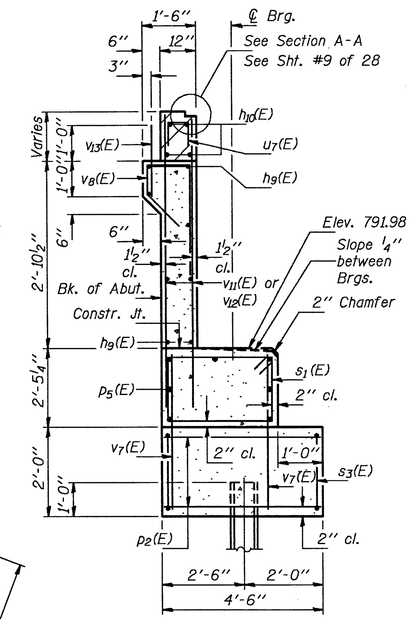

SECTION A-A

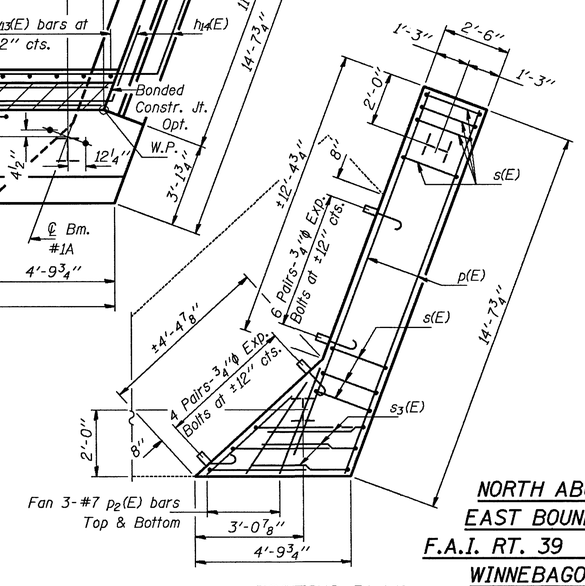

FOOTING PLAN
(East Wing)

Notes:

Hatched area to be poured after Superstructure forms have been removed. Form top surface to match superstructure. Concrete quantity is billed with "Class X Concrete Superstructure" see sheet #9 of 28.

Existing reinforcement extending into new construction shall be cleaned, straightened, and incorporated into new construction. Cost Incidental to "Concrete Removal".

Existing reinforcement not extending into new construction shall be cut off and covered with a 2" layer of cement grout cost incidental to "Concrete Removal".

Space reinforcement in cap to miss anchor bolts.

Reinforcement bars designated (E) shall be epoxy coated.

For Wingwall Details and Bill of Material see sheet #24 of 28.

For Anchor Bolt installation details see sheet #18 of 28.

All edges shall have standard ¾" chamfer except as noted.

See sheet #28 of 28 for locations of Concrete Removal.

PILE DATA

Type: Steel HP10 x 42
Capacity: 35 Ton Design Load (Max.)
Driven to 53 Ton
Est. Length: 44 Ft.
No. Required: 2 + 1 Test Pile

MIN. BAR LAPS

#5 (E) bars = 2'-2"

DESIGNED	Shaker Asfour
CHECKED	Christopher H. Mehrer
DRAWN	John F. Schneller Jr.
CHECKED	SA, CHM

May 3 1976

EXAMINED Craig D. Kaspar — ENGINEER OF BRIDGE DESIGN

PASSED Ralph E. Anderson — ENGINEER OF BRIDGES AND STRUCTURES

APPROVED — DIRECTOR OF HIGHWAYS

NORTH ABUTMENT
EAST BOUND LANES
F.A.I. RT. 39 SEC. 4 VBY
WINNEBAGO COUNTY
STA. 796+28.52

STATE OF ILLINOIS
DEPARTMENT OF TRANSPORTATION

ROUTE NO.	SECTION	COUNTY	TOTAL SHEETS	SHEET NO.
F.A.I. 39	4VBY	WINNEBAGO	171	75
FED. ROAD DIST. NO. 7	ILLINOIS	FED. AID PROJECT-		

SHEET NO. 24
28 SHEETS

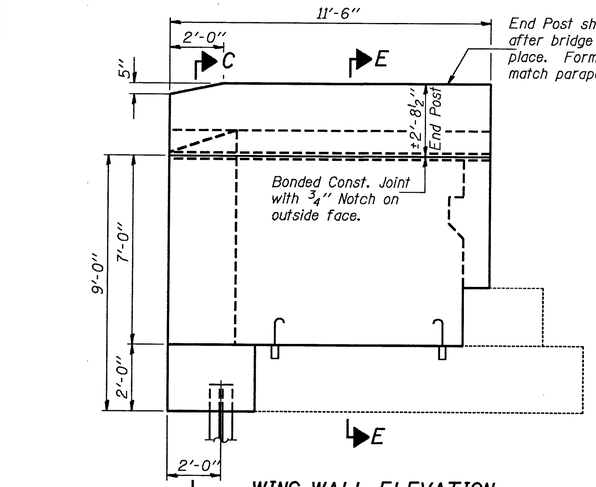

WING WALL ELEVATION

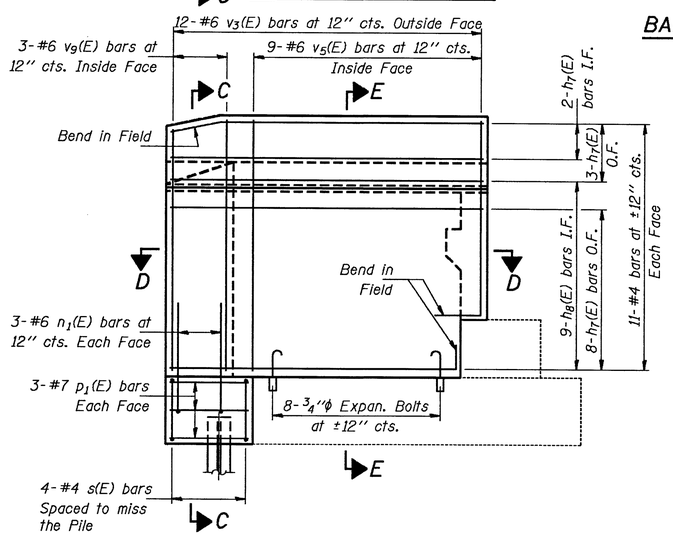

WING WALL ELEVATION
Reinforcement

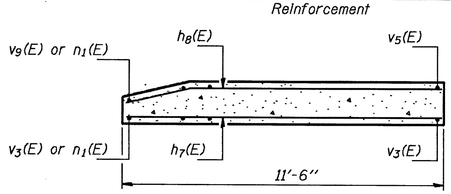

SECTION D-D

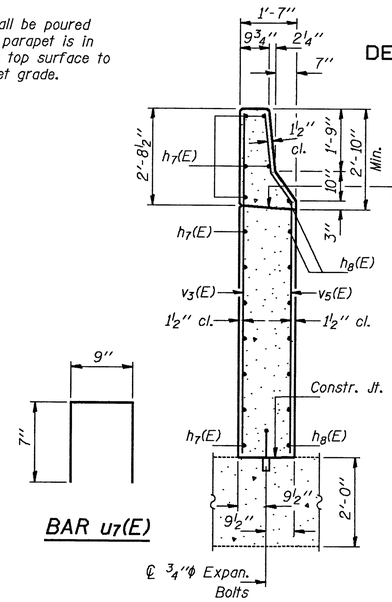

SECTION E-E

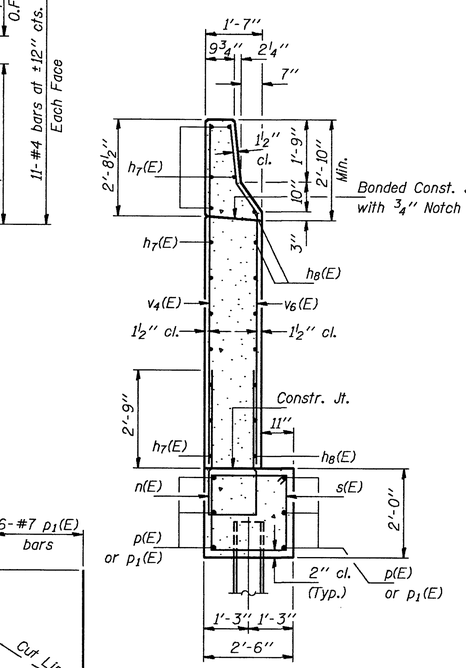

SECTION C-C

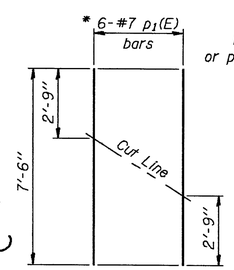

CUTTING DIAGRAM

* Order $p_1(E)$ bars full length. Cut to fit as shown and use remainder of bars in other footing.

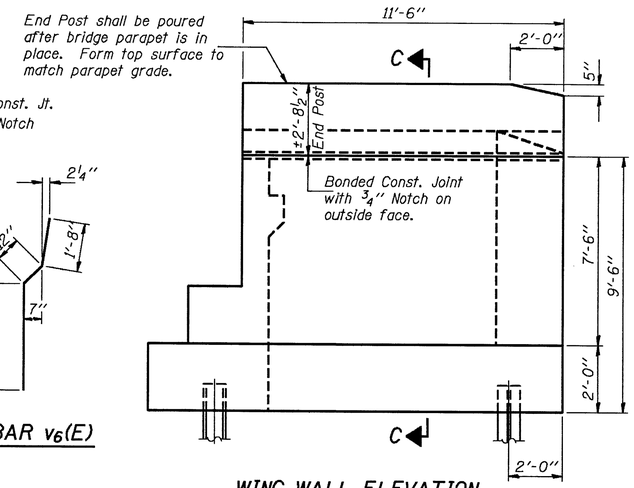

WING WALL ELEVATION

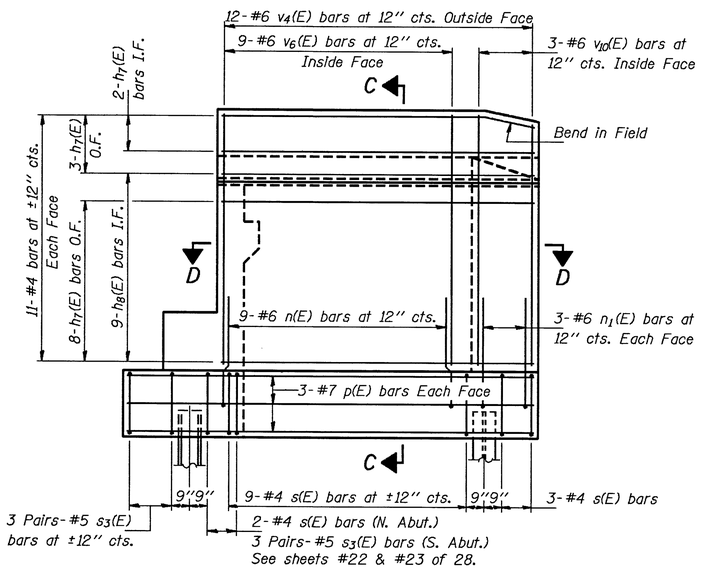

WING WALL ELEVATION
Reinforcement

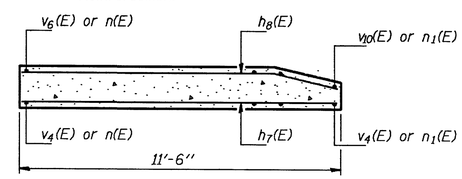

SECTION D-D

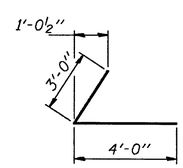

BAR h15(E)

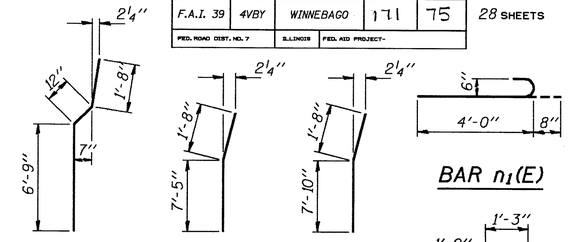

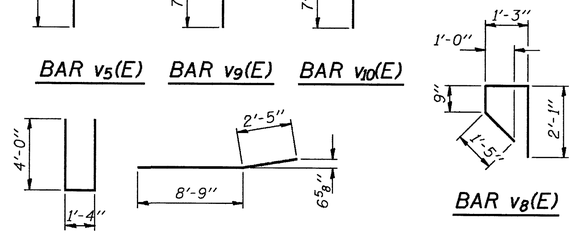

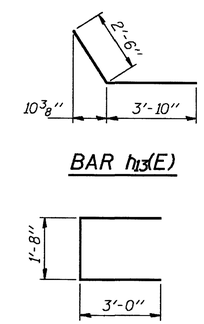

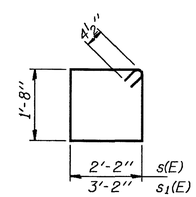

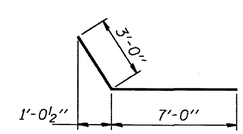

TWO ABUTMENTS BILL OF MATERIAL

Bar	No.	Size	Length	Shape
$h_6(E)$	8	#5	21'-1"	
$h_7(E)$	52	#4	11'-3"	
$h_8(E)$	36	#4	11'-2"	
$h_9(E)$	8	#5	7'-1"	
$h_{10}(E)$	8	#5	22'-3"	
$h_{12}(E)$	8	#5	7'-10"	
$h_{13}(E)$	10	#5	6'-4"	
$h_{14}(E)$	10	#5	10'-0"	
$h_{15}(E)$	20	#5	7'-0"	
$n(E)$	18	#6	9'-4"	
$n_1(E)$	12	#6	4'-8"	
$p(E)$	12	#7	14'-5"	
$p_1(E)$	6	#7	7'-6"	
$p_2(E)$	12	#7	4'-3"	
$p_5(E)$	7	#7	4'-6"	
$p_6(E)$	7	#7	6'-0"	
$s(E)$	34	#4	8'-5"	
$s_1(E)$	15	#4	10'-5"	
$s_3(E)$	18	#5	7'-8"	
$u_7(E)$	86	#5	1'-11"	
$v_3(E)$	24	#6	9'-5"	
$v_4(E)$	24	#6	9'-11"	
$v_5(E)$	18	#6	9'-5"	
$v_6(E)$	18	#6	9'-11"	
$v_7(E)$	24	#5	3'-8"	
$v_8(E)$	23	#5	5'-6"	
$v_9(E)$	6	#6	9'-1"	
$v_{10}(E)$	6	#6	9'-6"	
$v_{11}(E)$	22	#5	5'-10"	
$v_{12}(E)$	24	#5	4'-6"	
$v_{13}(E)$	23	#5	1'-9"	
Class X Concrete			Cu. Yds.	37.5
Reinforcement Bars (Epoxy Coated)			Lbs.	5,010
Steel Piles HP10 x 42			Lin. Ft.	184
Test Piles Steel HP10 x 42			Each	1
Structure Excavation			Cu. Yds.	50
Expansion Bolts ¾"φ			Each	236

ABUTMENT DETAILS
EAST BOUND LANES
F.A.I. RT. 39 SEC. 4 VBY
WINNEBAGO COUNTY
STA. 796+28.52

DESIGNED	Shaker Asfour
CHECKED	Christopher H. Mokuya
DRAWN	John F. Schneller Jr.
CHECKED	SA, CHM

May 3 1990
EXAMINED Raj. D. Kaspar — ENGINEER OF BRIDGE DESIGN
PASSED Ralph E. Anderson — ENGINEER OF BRIDGES AND STRUCTURES
APPROVED — DIRECTOR OF HIGHWAYS

STATE OF ILLINOIS
DEPARTMENT OF TRANSPORTATION

ROUTE NO.	SECTION	COUNTY	TOTAL SHEETS	SHEET NO.
F.A.I. 39	4VBY	WINNEBAGO	171	76
FED. ROAD DIST. NO. 7	ILLINOIS	FED. AID PROJECT-		

SHEET NO. 25
28 SHEETS

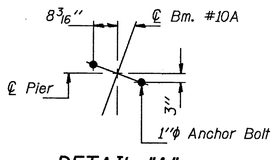

DETAIL "A"

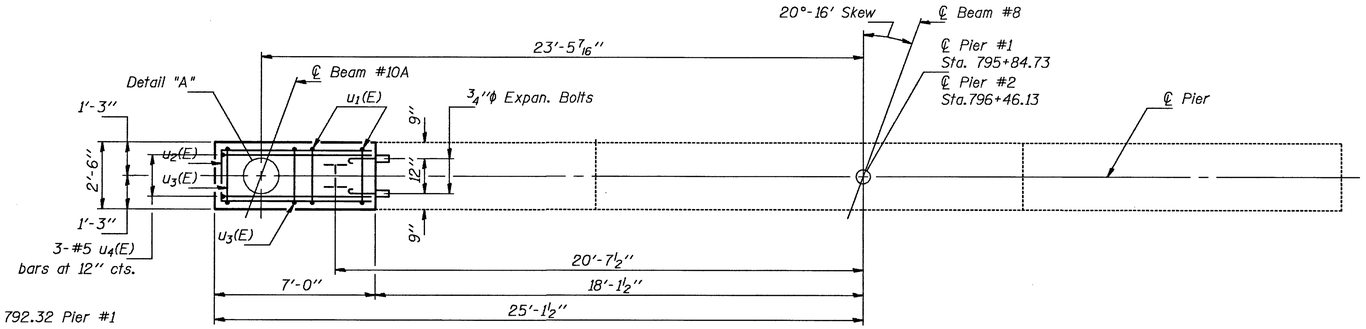

PLAN

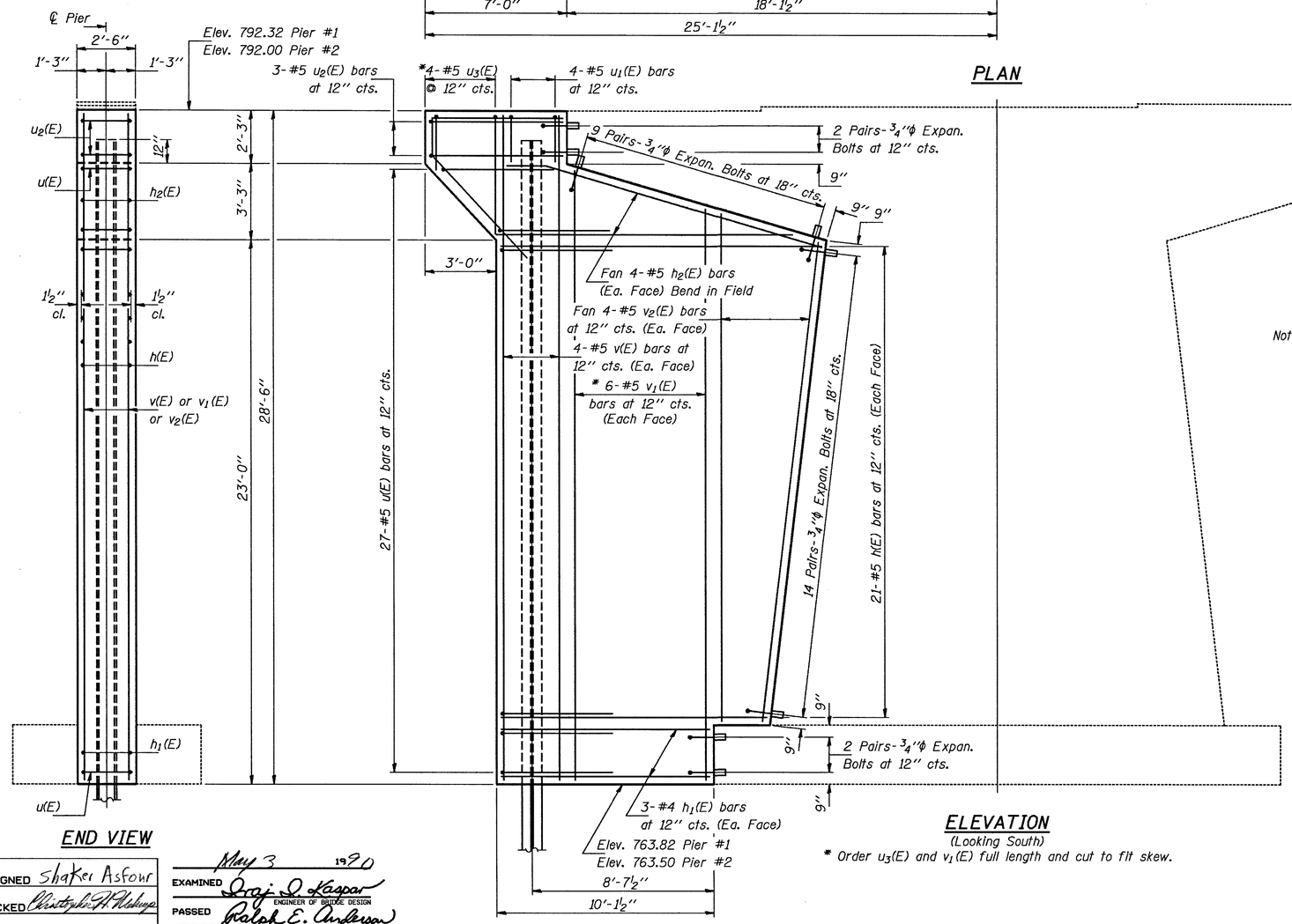

END VIEW

ELEVATION
(Looking South)
* Order u_3(E) and v_1(E) full length and cut to fit skew.

Notes: Space reinforcement in cap to miss anchor Bolts.
All edges shall have standard $\frac{3}{4}$'' chamfer.
For Anchor Bolt installation details see sheet #18 of 28.

PILE DATA

Type: Steel HP10x42
Capacity: 60 Ton Design Load (Max.) driven to 90 Ton Bearing
Est. Length: 45 Ft. Pier #1
Est. Length: 43 Ft. Pier #2
No. Required: 1 Pier #1
No. Required: 1 Pier #2

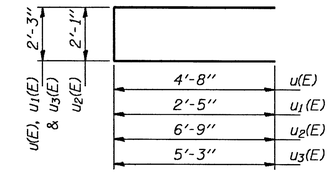

BARS u(E), u_1(E), u_2(E) & u_3(E)

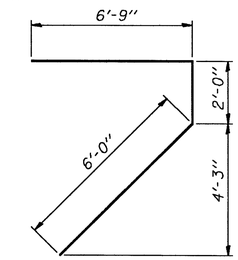

BAR u_4(E)

TWO PIERS BILL OF MATERIAL

Bar	No.	Size	Length	Shape
h(E)	84	#5	12'-3''	—
h_1(E)	12	#5	9'-10''	—
h_2(E)	16	#5	14'-10''	—
u(E)	54	#5	11'-7''	⊏
u_1(E)	8	#5	7'-1''	⊏
u_2(E)	6	#5	15'-7''	⊏
u_3(E)	8	#5	12'-9''	⊏
u_4(E)	6	#5	14'-9''	⊐
v(E)	16	#5	28'-3''	—
v_1(E)	24	#5	25'-11''	—
v_2(E)	16	#5	20'-4''	—
Reinforcement Bars (Epoxy Coated)			Lbs.	3,910
Class X Concrete			Cu. Yd.	66.4
Steel Piles HP10x42			Lin. Ft.	88
Expansion Bolts $\frac{3}{4}$''			Each	108
Structure Excavation			Cu. Yd.	35

Reinforcement bars designated (E) shall be epoxy coated.

DESIGNED	Shaker Asfour
CHECKED	Christopher H. Kleinegger
DRAWN	John F. Schneller Jr.
CHECKED	SA, CHM

May 3 1990
EXAMINED Sraj J. Kaspar — ENGINEER OF BRIDGE DESIGN
PASSED Ralph E. Anderson — ENGINEER OF BRIDGES AND STRUCTURES
APPROVED — DIRECTOR OF HIGHWAYS

PIERS #1 & #2
WEST BOUND LANES
F.A.I. RT. 39 SEC. 4 VBY
WINNEBAGO COUNTY
STA. 796+28.52

STATE OF ILLINOIS
DEPARTMENT OF TRANSPORTATION

ROUTE NO.	SECTION	COUNTY	TOTAL SHEETS	SHEET NO.
F.A.I. 39	4VBY	WINNEBAGO	171	77
FED. ROAD DIST. NO. 7		ILLINOIS	FED. AID PROJECT-	

SHEET NO. 26
28 SHEETS

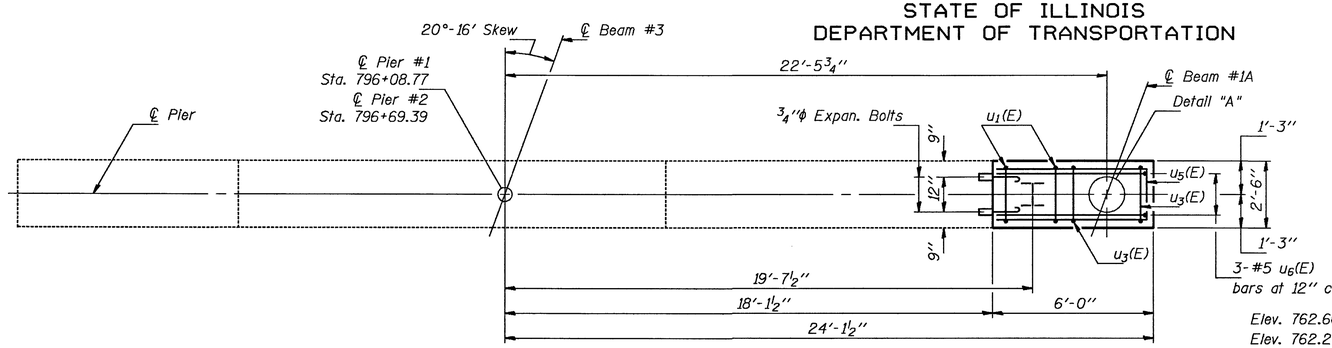

PLAN

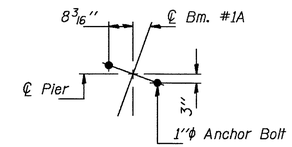

DETAIL "A"

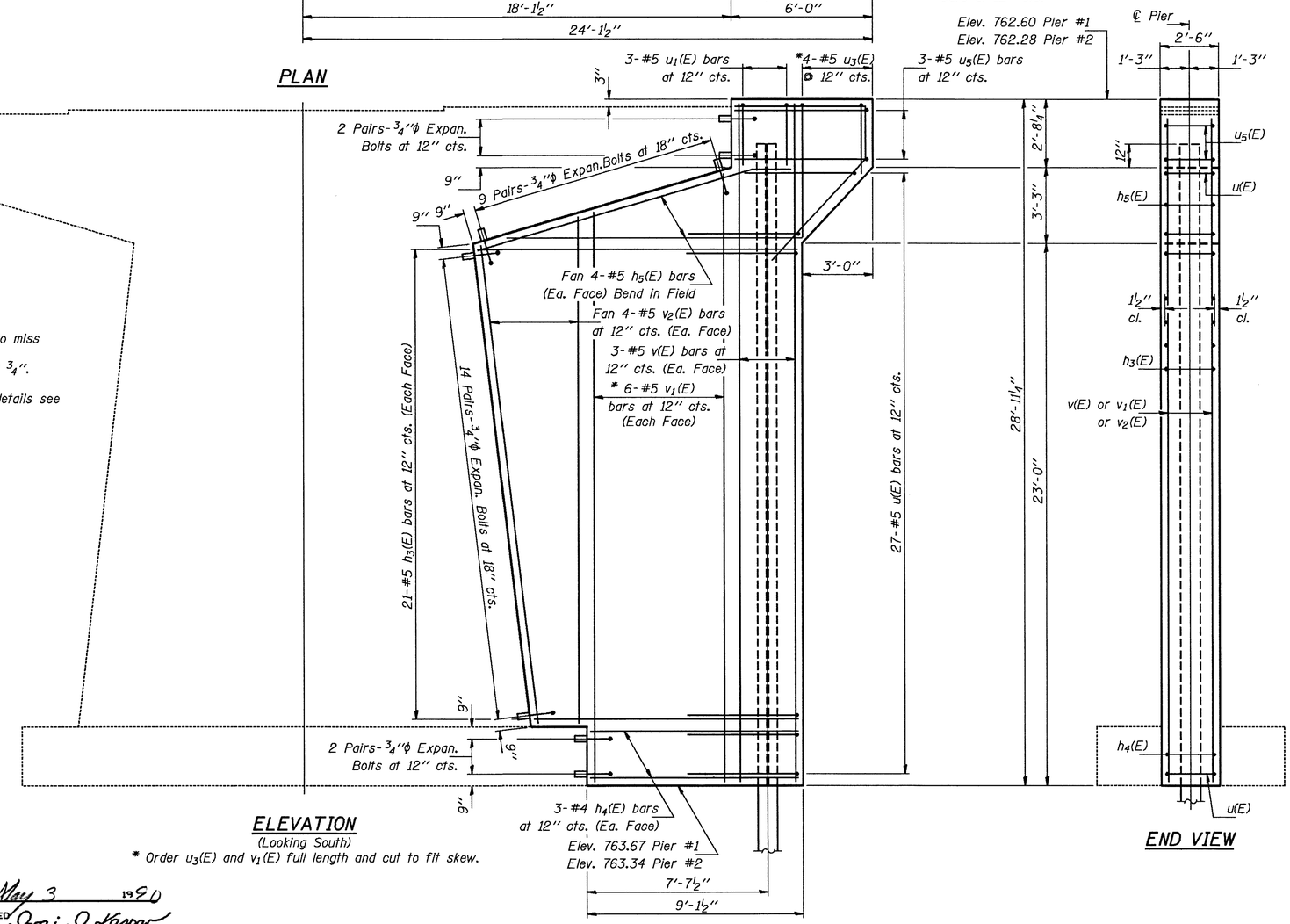

ELEVATION
(Looking South)
* Order $u_3(E)$ and $v_1(E)$ full length and cut to fit skew.

END VIEW

Notes: Space reinforcement in cap to miss Anchor Bolts.
All edges shall have standard ¾". chamfer.
For Anchor Bolt installation details see sheet #18 of 28.

PILE DATA

Type: Steel HP10x42
Capacity: 60 Ton Design Load (Max.) driven to 90 Ton Bearing
Est. Length: 45 Ft. Pier #1
Est. Length: 23 Ft. Pier #2
No. Required: 1 Pier #1
No. Required: 1 Pier #2

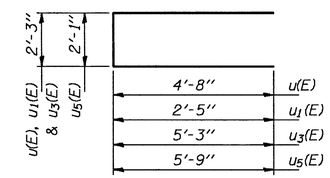

BARS $u(E)$, $u_1(E)$, $u_3(E)$ & $u_5(E)$

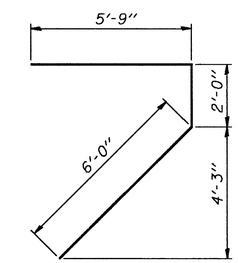

BAR $u_6(E)$

TWO PIERS BILL OF MATERIAL

Bar	No.	Size	Length	Shape
$h_3(E)$	84	#5	11'-3"	——
$h_4(E)$	12	#5	8'-10"	——
$h_5(E)$	16	#5	13'-10"	——
$u(E)$	54	#5	11'-7"	⊏
$u_1(E)$	6	#5	7'-1"	⊏
$u_3(E)$	8	#5	12'-9"	⊏
$u_5(E)$	6	#5	13'-7"	⊏
$u_6(E)$	6	#5	13'-9"	⊐
$v(E)$	12	#5	28'-3"	——
$v_1(E)$	24	#5	25'-11"	——
$v_2(E)$	16	#5	20'-4"	——
Reinforcement Bars (Epoxy Coated)			Lbs.	3,640
Class X Concrete			Cu. Yd.	61.4
Steel Piles HP10x42			Lin. Ft.	88
Expansion Bolts ¾"			Each	108
Structure Excavation			Cu. Yd.	33

Reinforcement bars designated (E) shall be epoxy coated.

DESIGNED Shaker Asfour
CHECKED Christopher H. Mehrens
DRAWN John F. Schneller Jr.
CHECKED SA, CHM

May 3 1990
EXAMINED Greg J. Kaspar
ENGINEER OF BRIDGE DESIGN
PASSED Ralph E. Anderson
ENGINEER OF BRIDGES AND STRUCTURES
APPROVED
DIRECTOR OF HIGHWAYS

PIERS #1 & #2
EAST BOUND LANES
F.A.I. RT. 39 SEC. 4 VBY
WINNEBAGO COUNTY
STA. 796+28.52

STATE OF ILLINOIS
DEPARTMENT OF TRANSPORTATION

ROUTE NO.	SECTION	COUNTY	TOTAL SHEETS	SHEET NO.
F.A.I. 39	4VBY	WINNEBAGO	171	78
FED. ROAD DIST. NO. 7		ILLINOIS	FED. AID PROJECT-	

SHEET NO. 27
28 SHEETS

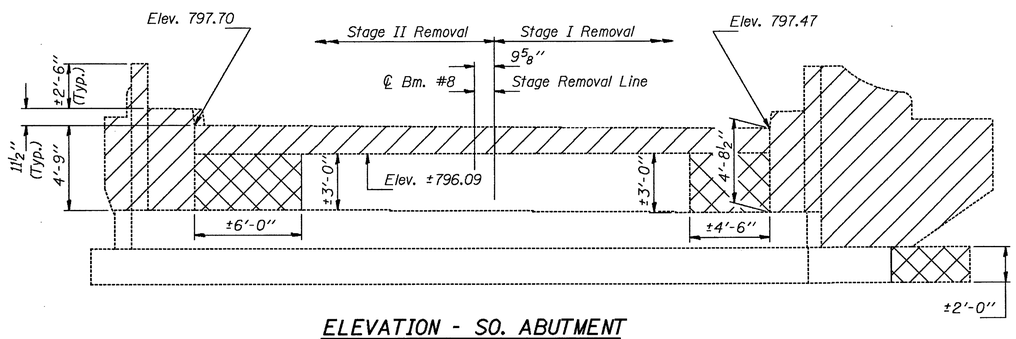

ELEVATION - SO. ABUTMENT
(Looking South)

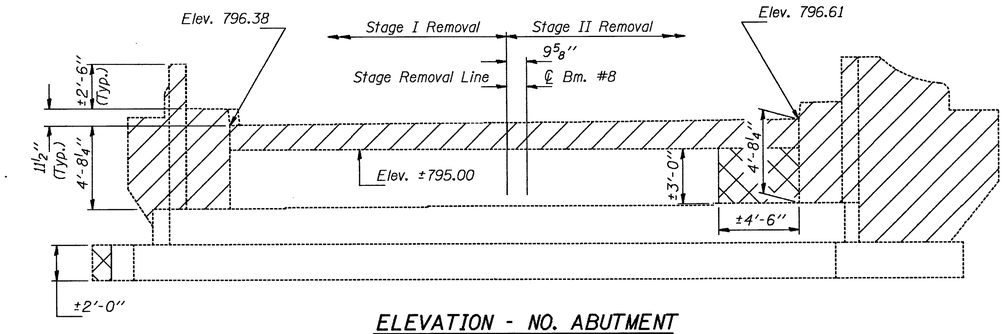

ELEVATION - NO. ABUTMENT
(Looking North)

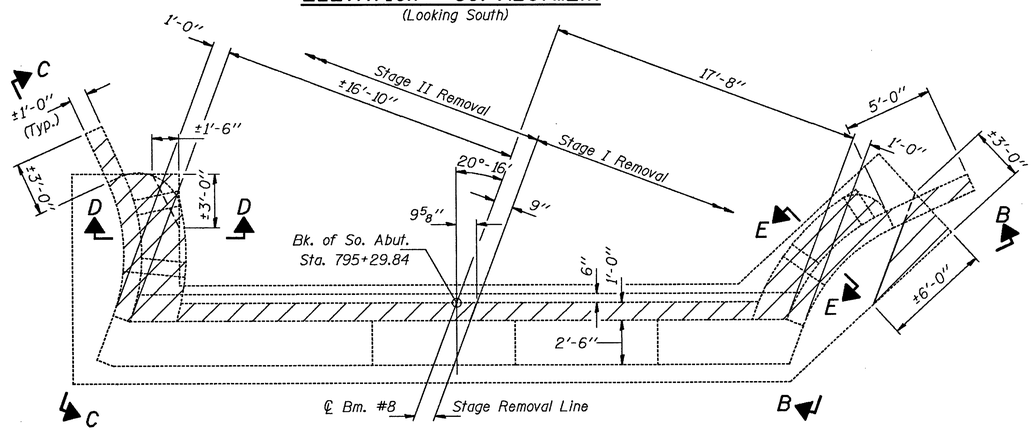

PLAN - SO. ABUTMENT

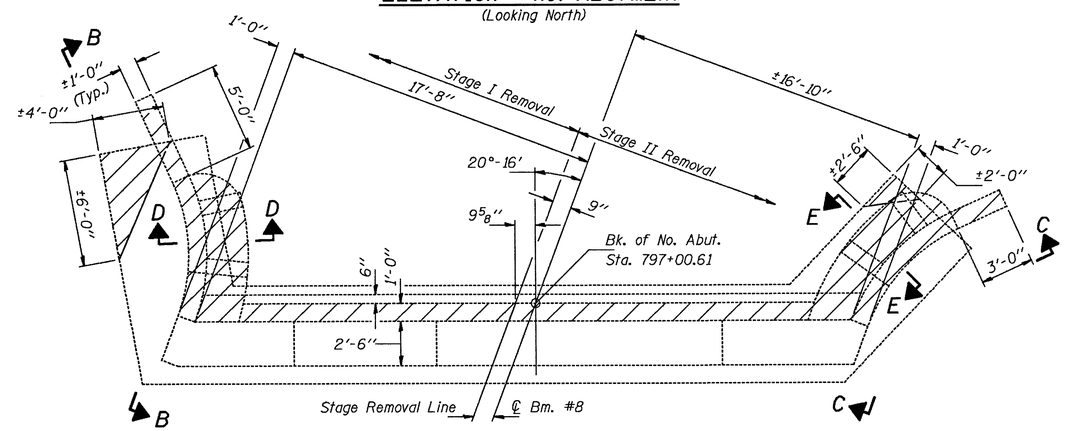

PLAN - NO. ABUTMENT

Notes: Hatched area indicates "Concrete Removal".
Cross hatched area indicates "Repair Concrete Structures".
Existing reinforcement extending into new construction shall be cleaned, straightened, and incorporated into new construction. Cost Incidental to "Concrete Removal".
Existing reinforcement not extending into new construction shall be cut off flush and covered with a 2" layer of cement grout. Cost incidental to "Concrete Removal".
Special care shall be taken not to damage the existing piles while removing the existing concrete.
For "Concrete Structure Repair" details see sheet #28 of 28.

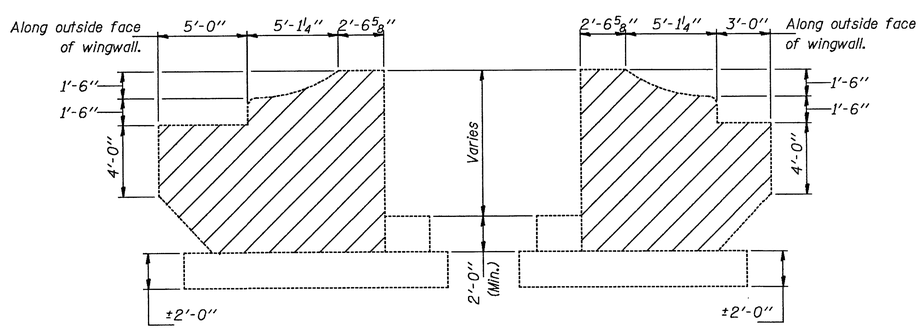

VIEW B-B

VIEW C-C

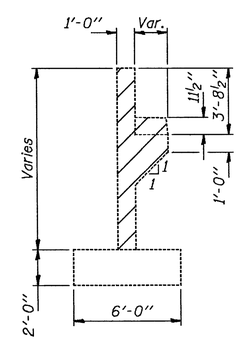

SECTION D-D
SECTION E-E

BILL OF MATERIAL

ITEM	UNIT	TOTAL
Concrete Removal	Cu. Yd.	~~27~~ 31.57
Repair Concrete Structures	Sq. Ft.	~~45~~ 0

CONCRETE REMOVAL
WEST BOUND LANES
F.A.I. RT. 39 SEC. 4 VBY
WINNEBAGO COUNTY
STA. 796+28.52

DESIGNED	Shaker Asfour
CHECKED	Christopher P. Mehlenpa
DRAWN	John F. Schneller Jr.
CHECKED	SA, CHM

May 3 1990
EXAMINED Jaj J. Kaspar — ENGINEER OF BRIDGE DESIGN
PASSED Ralph E. Anderson — ENGINEER OF BRIDGES AND STRUCTURES
APPROVED — DIRECTOR OF HIGHWAYS

STATE OF ILLINOIS
DEPARTMENT OF TRANSPORTATION

ROUTE NO.	SECTION	COUNTY	TOTAL SHEETS	SHEET NO.
F.A.I. 39	4VBY	WINNEBAGO	171	79
FED. ROAD DIST. NO. 7	ILLINOIS	FED. AID PROJECT-		

SHEET NO. 28
28 SHEETS

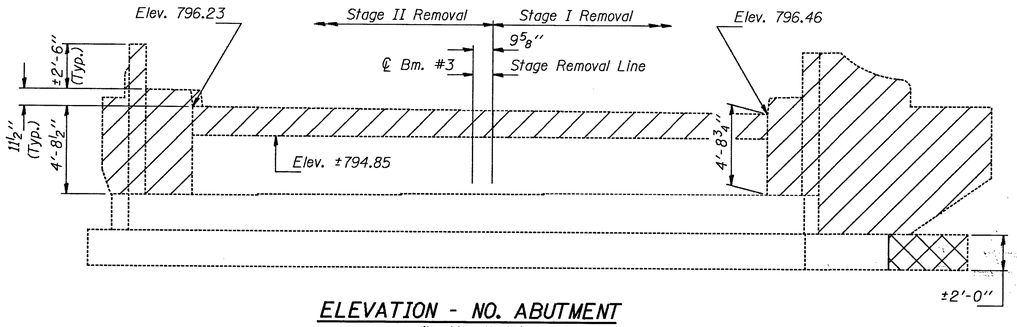

ELEVATION - NO. ABUTMENT
(Looking North)

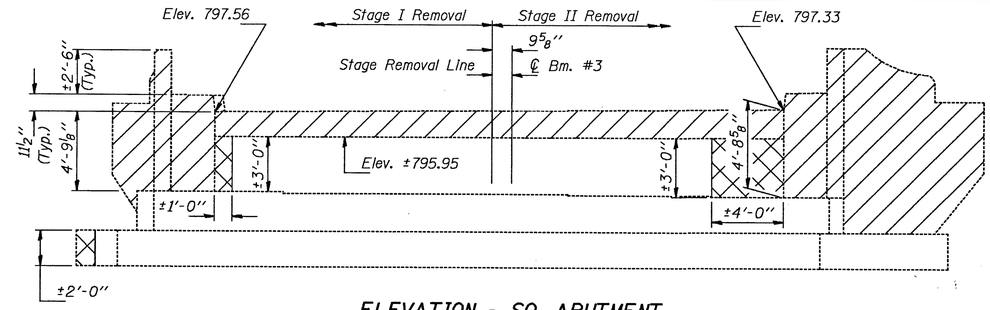

ELEVATION - SO. ABUTMENT
(Looking South)

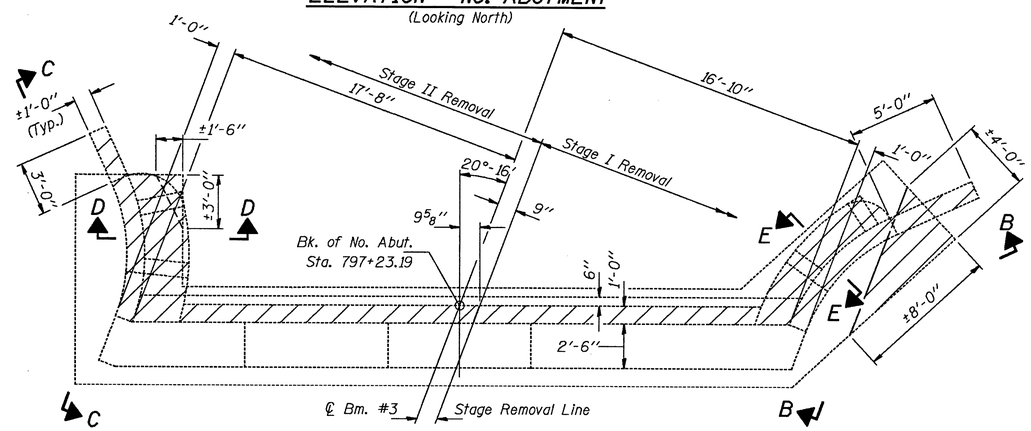

PLAN - NO. ABUTMENT

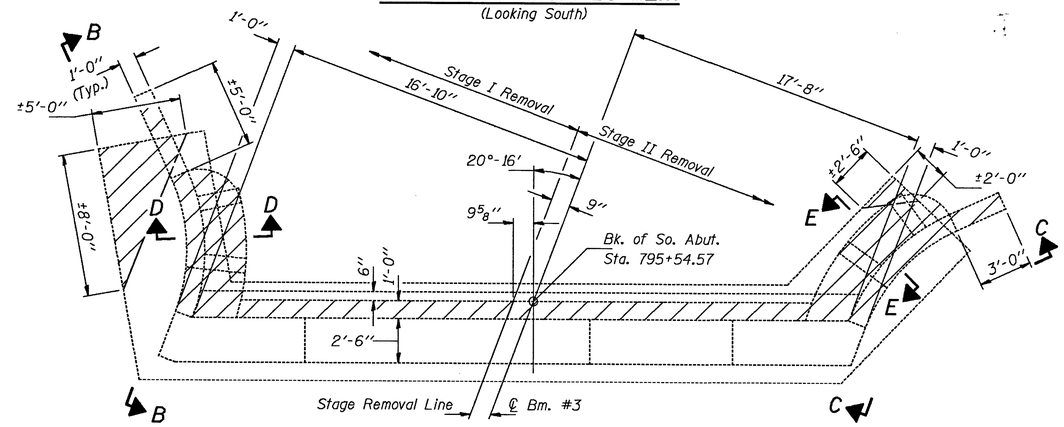

PLAN - SO. ABUTMENT

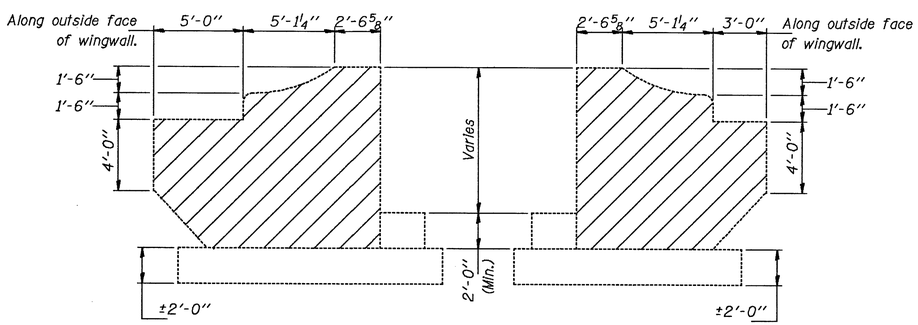

VIEW B-B

VIEW C-C

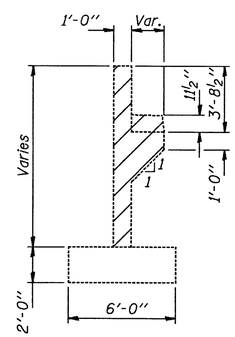

SECTION D-D
SECTION E-E

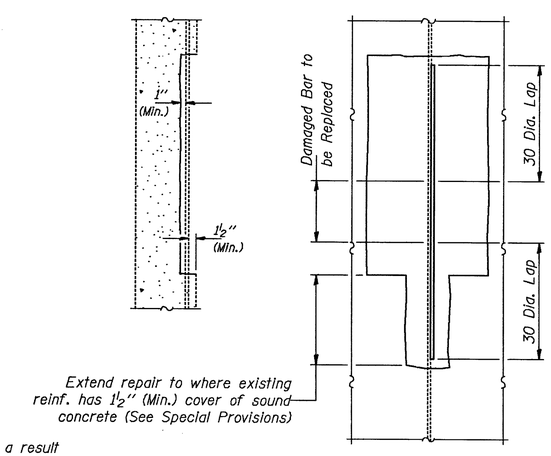

CONCRETE STRUCTURE REPAIR DETAILS

Notes: Hatched area indicates "Concrete Removal".
Cross hatched area indicates "Repair Concrete Structures".
Existing reinforcement extending into new construction shall be cleaned, straightened, and incorporated into new construction. Cost Incidental to "Concrete Removal".
Existing reinforcement not extending into new construction shall be cut off flush and covered with a 2" layer of cement grout. Cost incidental to "Concrete Removal".
Special care shall be taken not to damage the existing piles while removing the existing concrete.

Detail applies where existing reinforcement is exposed as a result of removing unsound concrete. Existing reinforcement having 10% or more of cross sectional area lost due to corrosion or damage during concrete removal shall be replaced by new reinforcement lapped as shown. Cost of additional reinforcement steel shall be incidental to "Repair Concrete Structures".

BILL OF MATERIAL

ITEM	UNIT	TOTAL
Concrete Removal	Cu. Yd.	27 32.66
Repair Concrete Structures	Sq. Ft.	15 0

DESIGNED	Shaker Asfour
CHECKED	Christopher H. Mehuys
DRAWN	John F. Schneller Jr.
CHECKED	SA, CHM

May 3, 1990

EXAMINED Greg S. Kasper — ENGINEER OF BRIDGE DESIGN

PASSED Ralph E. Anderson — ENGINEER OF BRIDGES AND STRUCTURES

APPROVED — DIRECTOR OF HIGHWAYS

CONCRETE REMOVAL
EAST BOUND LANES
F.A.I. RT. 39 SEC. 4 VBY
WINNEBAGO COUNTY
STA. 796+28.52

SHOULDER DRAINS

*(4,4-1,5)RS

ROUTE NO.	SEC.	COUNTY	TOTAL SHEETS	SHEET NO.
FAI 39	*	WINNEBAGO	171	79A
FED. ROAD DIST. NO. 7	ILLINOIS	PROJECT		

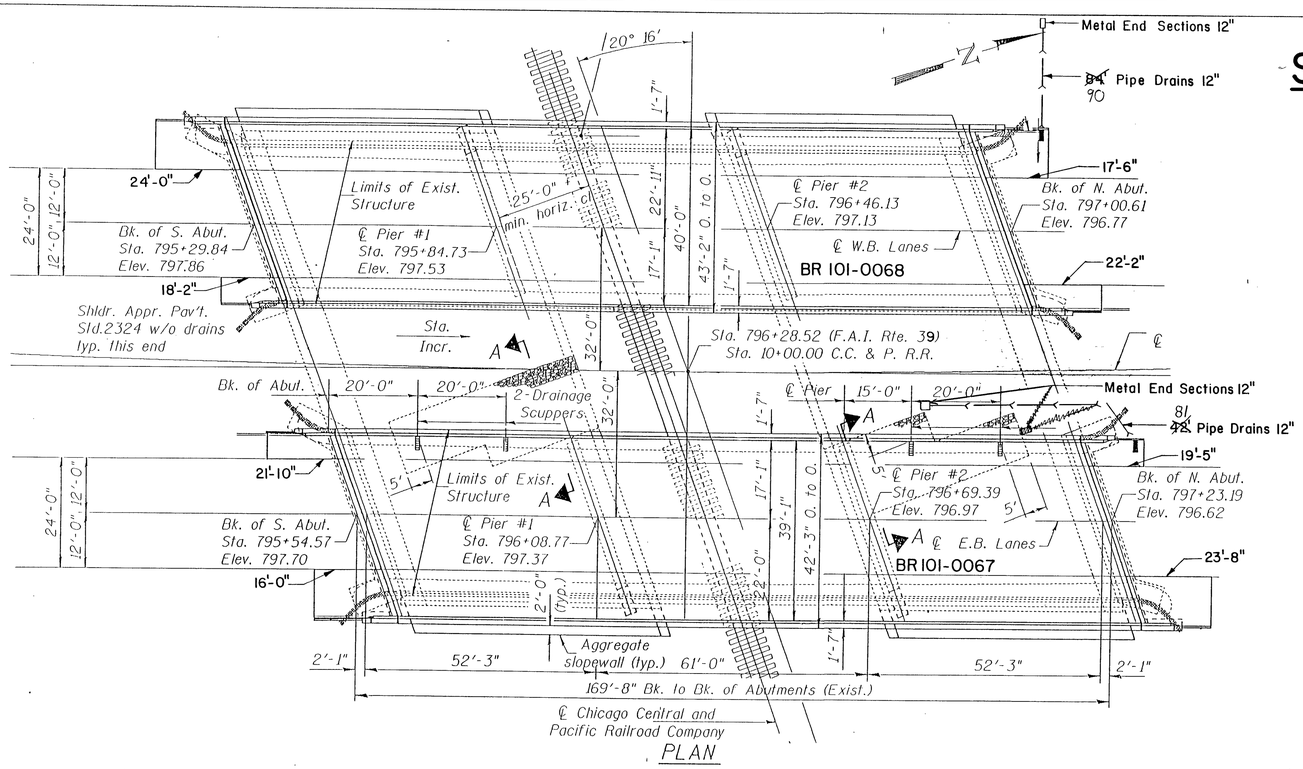

PLAN

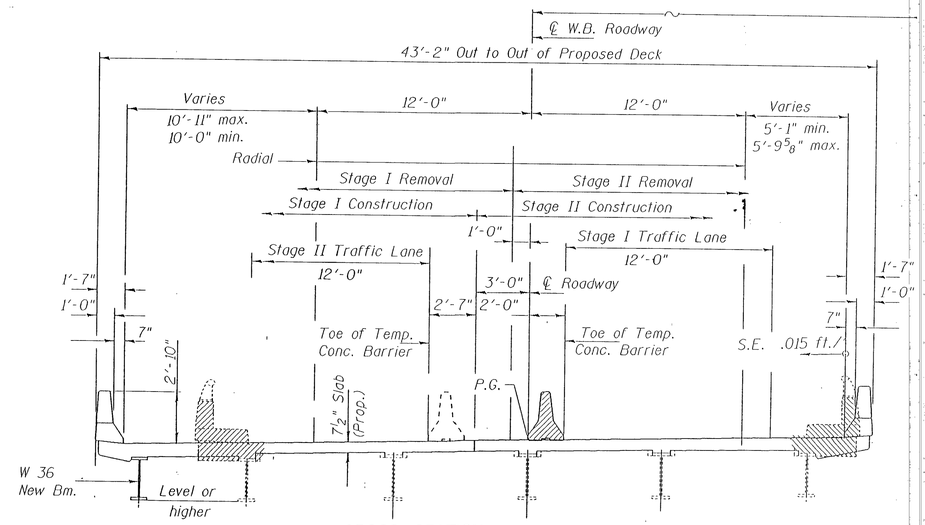

CROSS SECTION
West Bound Structure

PC CONCRETE BRIDGE APPROACH SHOULDER PAVEMENT

LOCATION	SQ YD
Br 68 NE Corner	14.5
Br 68 NW Corner	20.9
Br 68 SE Corner	11.7
Br 68 SW Corner	27.6
Br 67 NE Corner	25.2
Br 67 NW Corner	11.0
Br 67 SE Corner	22.6
Br 67 SW Corner	12.7
	146.2 ✓

TYPE C INLET BOX, STANDARD 2324

LOCATION	EACH
Br 67 NW Corner	1 ✓

TYPE D INLET BOX, STANDARD 2324

LOCATION	EACH
Br 68 NW Corner	1 ✓

CONCRETE THRUST BLOCKS

LOCATION	EACH
Br 68 NW Corner	1 ✓
Br 67 NW Corner	~~2~~ 1
	~~3~~ 2

METAL END SECTIONS 12"

LOCATION	EACH
Br 68 NW Corner	1
Br 67 NW Corner	1
	2 ✓

PIPE DRAINS 12"

LOCATION	LIN FT
Br 68 NW Corner	~~84~~ 90
Br 67 NW Corner	~~42~~ 81
	~~126~~ 171

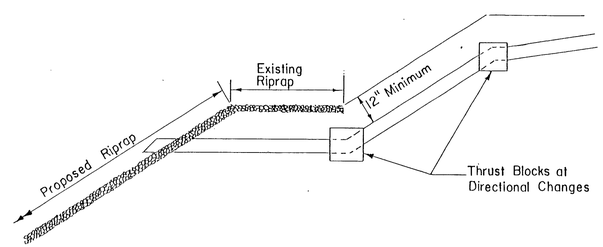

EXCAVATING AND GRADING EXISTING SHOULDER

LOCATION			SQ YD
Outside	EB	789+26 - 795+44 (10' Wide)	687
Median Side	EB	791+16 - 795+53 (4' Wide)	194
Outside	WB	791+73 - 795+07 (10' Wide)	371
Median Side	WB	793+67 - 795+37 (4' Wide)	76
Median Side	WB	797+02 - 801+37 (4' Wide)	193
Outside	WB	797+13 - 803+27 (10' Wide)	682
Median Side	EB	797+16 - 798+86 (4' Wide)	76
Outside	EB	797+48 - 800+80 (10' Wide)	369
			2648

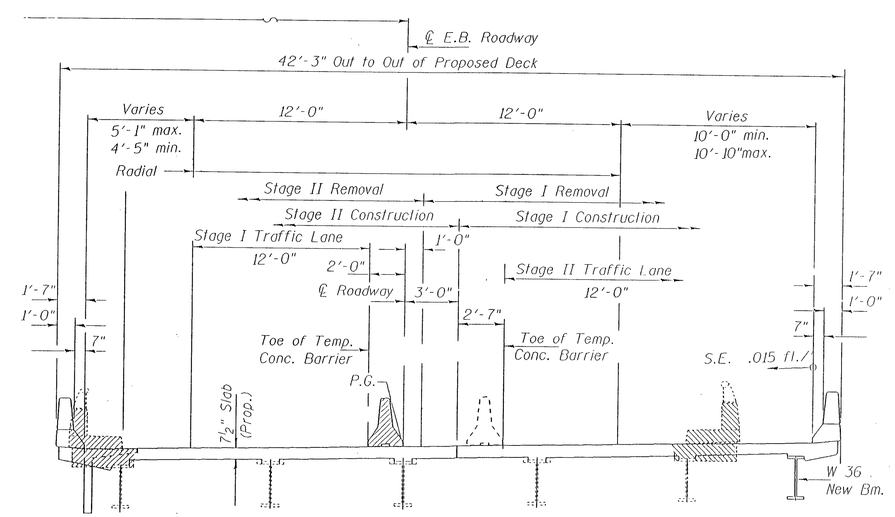

CROSS SECTION
East Bound Structure

DISTRICT NO. 2 DIXON

DESIGNED

DRAWN J. HANSEN DATE 3-90

CHECKED Ouyn SCALE

Revised

BR 101-0067 EB & 101-0068 WB AT C.C.&P. R.R.

4-23-10 LETTING ITEM 035

101 - 0067, 68

F.A.I. RTE.	SECTION	COUNTY	TOTAL SHEETS	SHEET NO.
39	(4VBY, 4VBY-1, 5HB)M	Winnebago	36 ✱	1
	ILLINOIS	CONTRACT NO. 64G12		

✱ 36+1 = 37

D-82-060-10

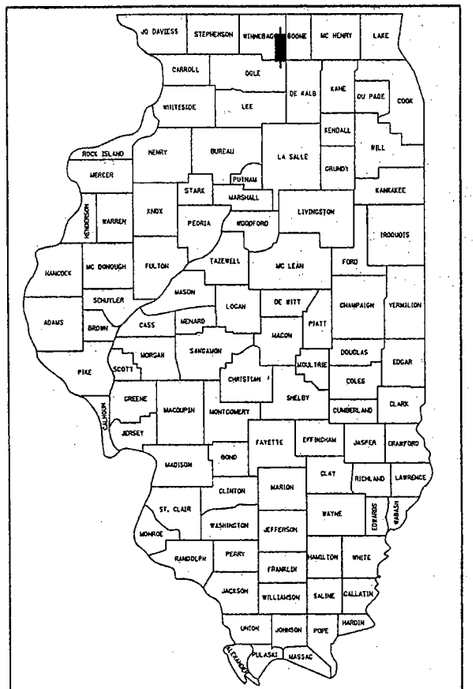

LOCATION OF SECTION INDICATED THUS:- ▬

STATE OF ILLINOIS
DEPARTMENT OF TRANSPORTATION
DIVISION OF HIGHWAYS

FOR INDEX OF SHEETS, SEE SHEET NO. 3

PROPOSED HIGHWAY PLANS

FAI ROUTE 39 (I-39)
SECTION (4VBY, 4VBY-1, 5HB)M
BRIDGE MAINTENANCE
JOINT REPLACEMENT
WINNEBAGO COUNTY

C-92-120-10

Structure 101-0071 I-39 NB over Harrison Avenue
Structure 101-0072 I-39 SB over Harrison Avenue

Structure 101-0069 I-39 SB over UP Railroad
Structure 101-0070 I-39 NB over UP Railroad

Structure 101-0067 I-39 NB over CC&P Railroad
Structure 101-0068 I-39 SB over CC&P Railroad

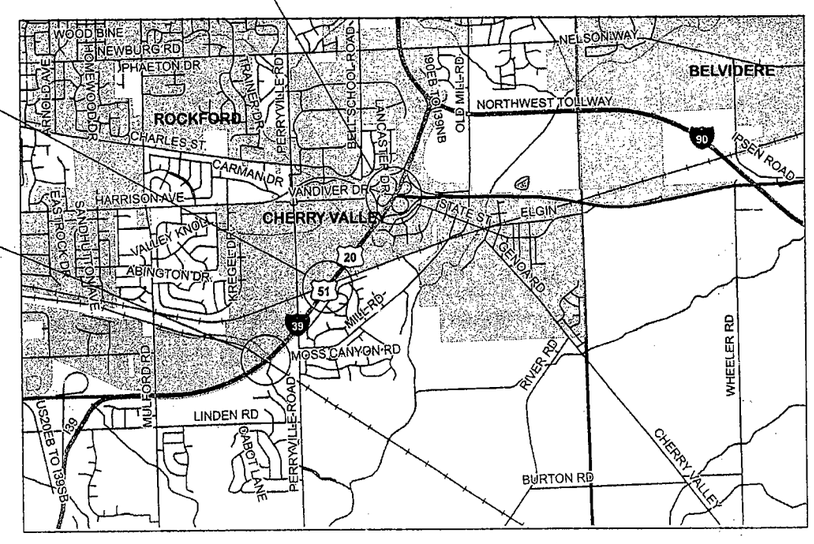

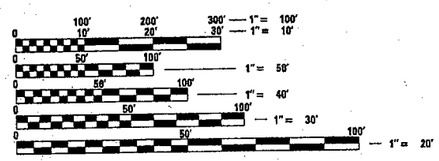

FULL SIZE PLANS HAVE BEEN PREPARED USING STANDARD ENGINEERING SCALES. REDUCED SIZED PLANS WILL NOT CONFORM TO STANDARD SCALES. IN MAKING MEASUREMENTS ON REDUCED PLANS, THE ABOVE SCALES MAY BE USED.

J.U.L.I.E.
JOINT UTILITY LOCATION INFORMATION FOR EXCAVATION
1-800-892-0123
OR 811

PROJECT ENGINEER: MAHMOUD ETEMADI 815/284-5393

GROSS LENGTH = 678 FT. = 0.128 MILE
NET LENGTH = 678 FT. = 0.128 MILE

STATE OF ILLINOIS
DEPARTMENT OF TRANSPORTATION
DIVISION OF HIGHWAYS

SUBMITTED Feb. 8th 2010
George F. Ryan
DEPUTY DIRECTOR OF HIGHWAYS, REGION ENGINEER

March 19, 2010
Scott E. Stitt, P.E.
acting ENGINEER OF DESIGN AND ENVIRONMENT

March 19, 2010
Christine M. Reed
DIRECTOR OF HIGHWAYS, CHIEF ENGINEER

PRINTED BY THE AUTHORITY OF THE STATE OF ILLINOIS

CONTRACT NO. 64G12

SUMMARY OF QUANTITIES

100% STATE
SFTY-2A
URBAN

PAY ITEM #	DESCRIPTION	UNIT	QUANTITY
40603570	POLYMERIZED HOT-MIX ASPHALT SURFACE COURSE, MIX "E", N90	TON	140
42001300	PROTECTIVE COAT	SQ YD	261
44000155	HOT-MIX ASPHALT SURFACE REMOVAL, 1 1/2"	SQ YD	1608
50102400	CONCRETE REMOVAL	CU YD	116.8
50300255	CONCRETE SUPERSTRUCTURE	CU YD	117.4
50800205	REINFORCEMENT BARS, EPOXY COATED	POUND	13,080
50800515	BAR SPLICERS	EACH	168
52000110	PREFORMED JOINT STRIP SEAL	FOOT	714
67100100	MOBILIZATION	L SUM	1
70100205	TRAFFIC CONTROL AND PROTECTION, STANDARD 701401	EACH	1
70100207	TRAFFIC CONTROL AND PROTECTION, STANDARD 701402	EACH	2
70100420	TRAFFIC CONTROL AND PROTECTION, STANDARD 701411	EACH	3
70300220	TEMPORARY PAVEMENT MARKING - LINE 4"	FOOT	30,200
70301000	WORK ZONE PAVEMENT MARKING REMOVAL	SQ FT	10,110
70400100	TEMPORARY CONCRETE BARRIER	FOOT	2,500
70400200	RELOCATE TEMPORARY CONCRETE BARRIER	FOOT	2,200
* 78001130	PAINT PAVEMENT MARKING - LINE 6"	FOOT	14,236
78300100	PAVEMENT MARKING REMOVAL	SQ FT	2,500
X0325702	NIGHTTIME WORK ZONE LIGHTING	L SUM	1
X7030020	TEMPORARY PAVEMENT MARKING TAPE, 8 INCH (BLACK)	FOOT	300
Z0030250	IMPACT ATTENUATORS, TEMPORARY (NON- REDIRECTIVE), TEST LEVEL 3	EACH	6
Z0030280	IMPACT ATTENUATORS, TEMPORARY (SEVERE USE, NARROW), TEST LEVEL 3	EACH	2
Z0030350	IMPACT ATTENUATORS, RELOCATE (NON- REDIRECTIVE), TEST LEVEL 3	EACH	4

* SPECIALTY ITEM

GENERAL NOTES

The final top four inches of soil in any right-of-way area disturbed by the Contractor must be capable of supporting vegetation. The soil must be from the A horizon (zero to 2' deep) of soil profiles of local soils.

All Borrow/Waste/Use sites must be approved by the Department prior to removing any material from the project or initiating any earthmoving activities, including temporary stockpiling outside the limits of construction.

The Contractor shall seed all disturbed areas within the project limits. Seeding Class 4 or 2A shall be used, except in front of properties where the grass will be mowed, then use Seeding, Class 1. Class 2A shall be used on front slopes and ditch bottoms. Class 4 shall be used behind Type A gutter, on all backslopes and areas behind the backslope, and beyond the toe of front slope on fill sections without ditches. This work will be included in the contract unit price per Cubic Yard for Concrete Superstructure.

Fertilizer shall be applied to all disturbed areas and incorporated into the seedbed prior to seeding or placement of sod at the rate specified in Sections 250 and 252 of the Standard Specifications. This work shall be included in the cost of Concrete Superstructure.

Mulch Method II shall be applied over all seeded areas. This shall be included in the cost of the Concrete Superstructure.

The following Mixture Requirements are applicable for this project:

Mixture Uses(s):
PG:
Design Air Voids
Mixture Composition
(Gradation Mixture)
Friction Aggregate
20 Year ESAL

Bituminous and Aggregate prime coat shall be placed in accordance with Section 406 of the Standard Specifications. The cost of the prime coats shall be included in the contract unit price per ton for Polymerized Hot-Mix Asphalt Surface Course, Mix "E", N90.

At bridge expansion joints, if temporary expansion joint bulkheads are attached to adjacent deck slabs or abutments for support, the Contractor shall cut the attachments as soon as the concrete has set to prevent joint damage due to horizontal contraction or expansion.

Pavement Marking shall be done according to Standard 780001, except as follows:

1. All words, such as ONLY, shall be 2.4 m (8 feet) high.
2. All non-freeway arrows shall be the large size.
3. The distance between yellow no-passing lines shall be 200 mm (8"), not 180 mm (7") as shown in the detail of Typical Lane and Edge Lines.

The Contractor shall be responsible for protecting utility property during construction operations as outlined in Article 107.31 of the Standard Specifications. A minimum of 48 hours advance notice is required for non-emergency work. The JULIE number is 800-892-0123.

INDEX OF SHEETS

1. Cover Sheet
2. Summary of Quantities
3. General Notes, Index of Sheets, Standards
4. Traffic Control Plan Structures 101-0067 & 0068
5. Staging Cross Section Structures 101-0067 & 0068
6. Traffic Control Plan Structures 101-0069 & 0070
7. Staging Cross Section Structures 101-0069 & 0070
8. -10. Traffic Control Plan Stage I Structures 101-0071 & 0072
11. -13. Traffic Control Plan Stage II Structures 101-0071 & 0072
14. Staging Cross Sections Structures 101-0071 & 0072
15. Bridge Approach Resurfacing Structures 101-0067, 0068, 0069 & 0070
16. Bridge Approach Resurfacing Structures 101-0071 & 0072
17. -23. Bridge Repair Plans Structures 101-0067 & 0068
24. -28. Bridge Repair Plans Structures 101-0069 & 0070
29. -35A Bridge Repair Plans Structures 101-0071 & 0072
36. District Standard for Narrow Width Signing

STANDARDS

701101-02 Off-Road Operations, Multilane, 4.5 m (15') to 600 mm (24") From Pavement Edge
701400-04 Approach to Lane Closure, Freeway/Expressway
701401-05 Lane Closure, Freeway/Expressway
701402-07 Lane Closure, Freeway/Expressway, with Barrier
701411-06 Lane Closure, Multilane, at Entrance or Exit Ramp, for Speeds > 45 MPH
701426-03 Lane Closure, Multilane, Intermittent or Moving Operation, for Speeds > 45 MPH
701901-01 Traffic Control Devices
720001-01 Sign Panel Mounting Details
720011-01 Metal Posts for Signs, Markers and Delineators
728001-01 Telescoping Steel Sign Support
729001-01 Applications of Types A and B Metal Posts (For Signs & Markers)

STATE OF ILLINOIS
DEPARTMENT OF TRANSPORTATION

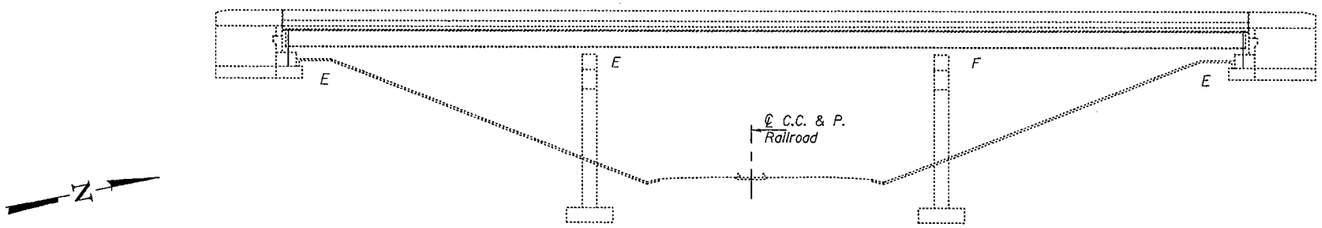

ELEVATION

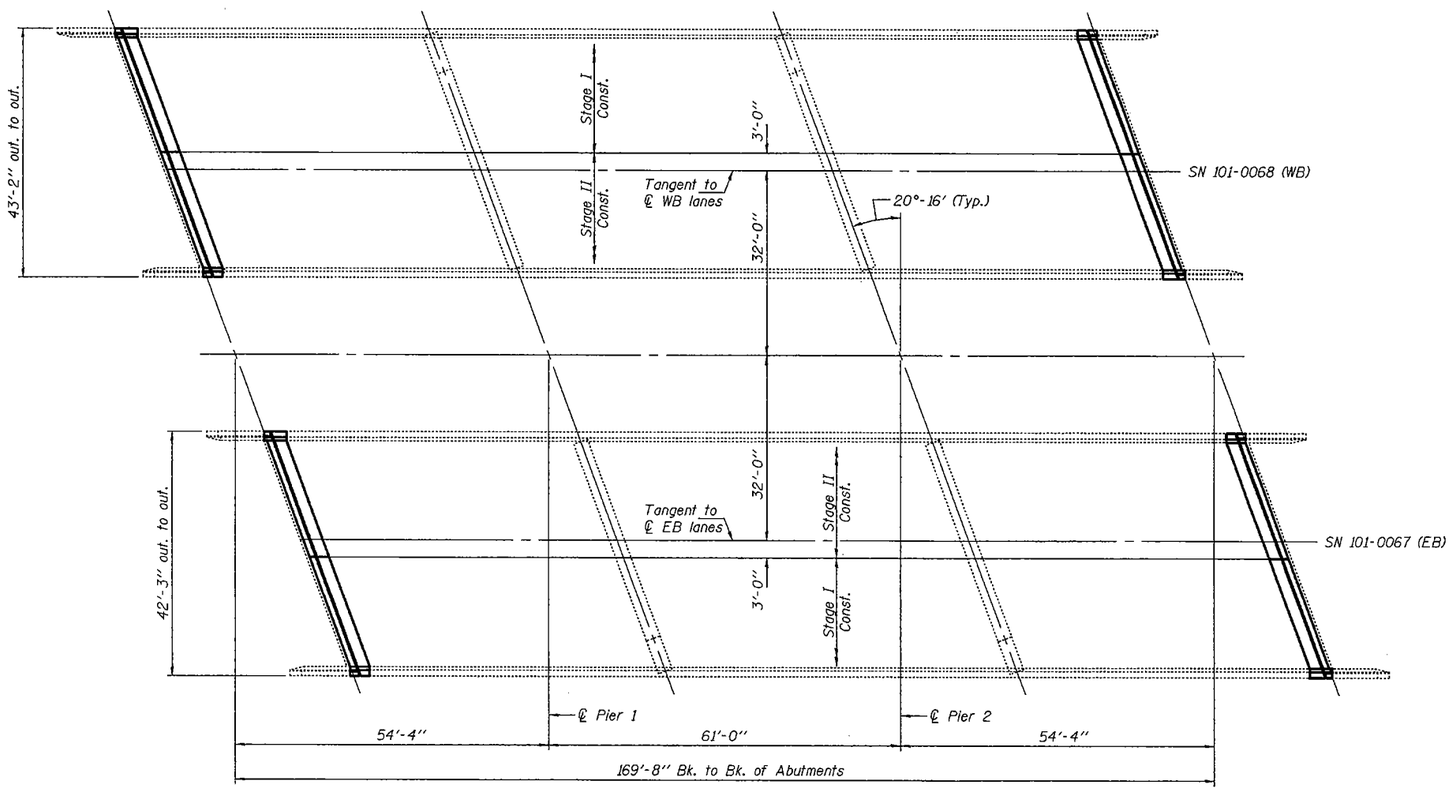

PLAN

GENERAL NOTES

Reinforcement bars shall conform to the requirements of ASTM A 706 Gr 60. See Special Provisions.

Reinforcement bars designated (E) shall be epoxy coated.

Prior to pouring the new concrete deck, all heavy or loose rust, loose mill scale, and other loose or potentially detrimental foreign material shall be removed from the surfaces in contact with concrete. Tightly adhered paint may remain unless otherwise noted. Removal shall be accomplished by methods that will not damage the steel and the cost will be included in the pay item covering removal of the existing concrete.

Plan dimensions and details relative to existing plans are subject to nominal construction variations. The Contractor shall field verify existing dimensions and details affecting new construction and make necessary approved adjustments prior to construction or ordering of materials. Such variations shall not be cause for additional compensation for a change in scope of the work, however, the Contractor will be paid for the quantity actually furnished at the unit price bid for the work.

Existing reinforcement bars extending into the removal area shall be cleaned, straightened and incorporated into the new construction. Any reinforcement bars that are damaged during concrete removal shall be replaced with an approved bar splicer or anchorage system. Cost included with Concrete Removal.

The deck surface shall have its final finish tined according to Article 420.09(e)(1) of the Standard Specifications. Cost included with Concrete Superstructure.

Joint openings shall be adjusted according to Article 520.04 of the Std. Specs. when the deck is poured at an ambient temperature other than 50° F.

The existing structural steel coating contains lead. The Contractor shall take appropriate precautions to deal with the presence of lead on this project.

Contractor must exercise extreme care as not to damage the Fiber Optic Conduit attached to the structure. Any damage is to be repaired at the Contractor's expense to the satisfaction of the utility company.

TOTAL BILL OF MATERIAL

	ITEM	UNIT	QUANTITY
	Concrete Removal	Cu. Yd.	27.4
	Concrete Superstructure	Cu. Yd.	27.4
	Preformed Joint Strip Seal	Foot	178
	Reinforcement Bars, Epoxy Coated	Pound	3300
	Bar Splicers	Each	56
*	Protective Coat	Sq. Yd.	66

* Apply to new concrete only.

PLAN & ELEVATION
SN 101-0067 & 0068

DESIGNED	Lin D. Ott
CHECKED	Allan T. Holloway
DRAWN	Kyle M. Steffen
CHECKED	IJL ATH

MARCH 9, 2010

EXAMINED — Engineer of Structural Services

PASSED — Engineer of Bridges and Structures

STATE OF ILLINOIS
RALPH E. ANDERSON
061-004625
SPRINGFIELD
LICENSED STRUCTURAL ENGINEER

Expires: November 30, 2010

SHEET NO. 1	F.A.I. RTE.	SECTION	COUNTY	TOTAL SHEETS	SHEET NO.
7 SHEETS	39	(4VBY, 4VBY-1, 5HB)M	WINNEBAGO	36	17
			CONTRACT NO. 64G12		
	FED. ROAD DIST. NO.	ILLINOIS	FED. AID PROJECT		

10100b7.dgn 09-Mar-10 15:15:45

STATE OF ILLINOIS
DEPARTMENT OF TRANSPORTATION

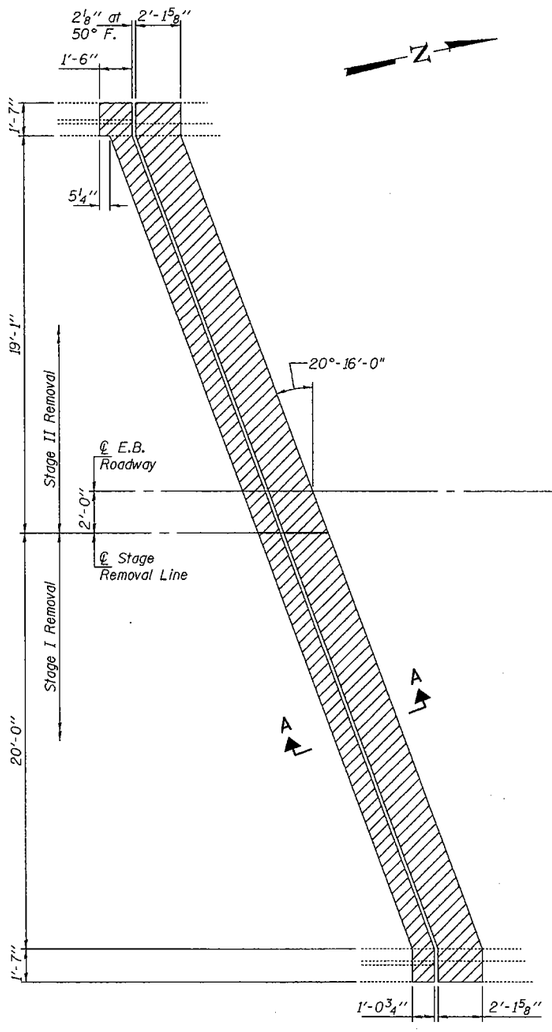

REMOVAL PLAN
South Abutment

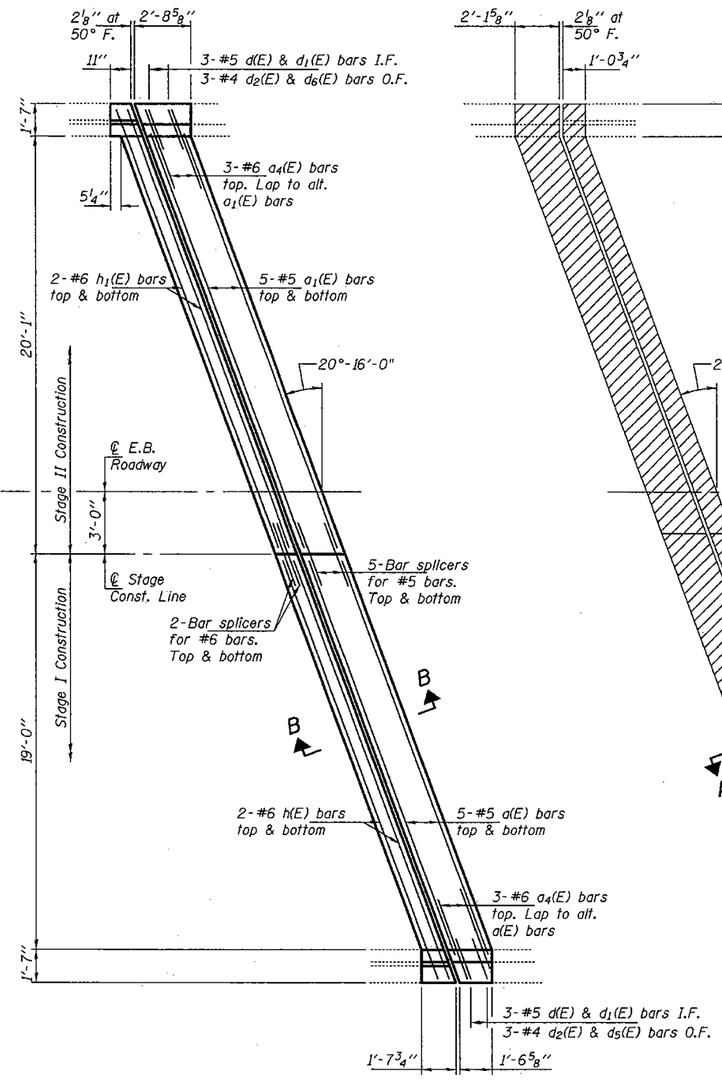

REPLACEMENT PLAN
South Abutment

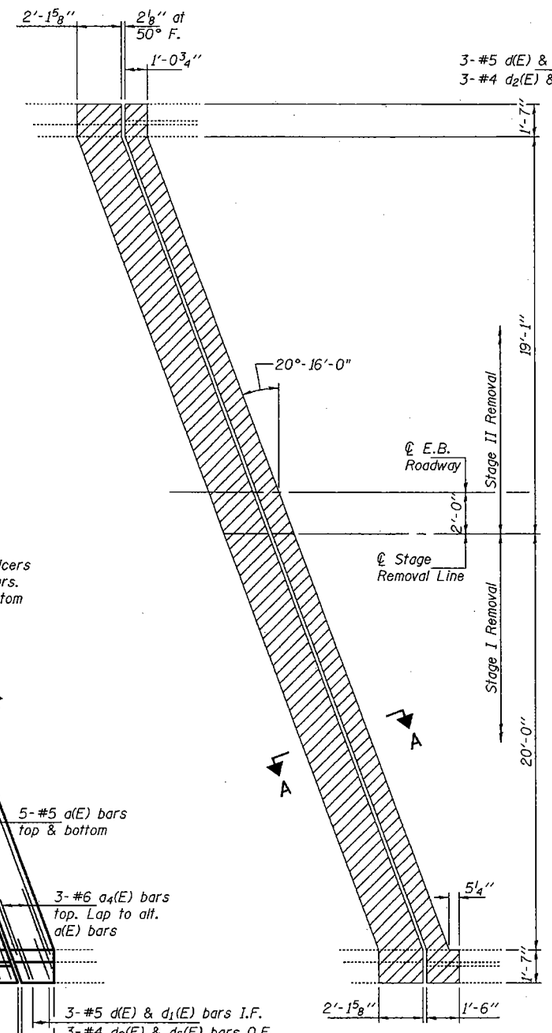

REMOVAL PLAN
North Abutment

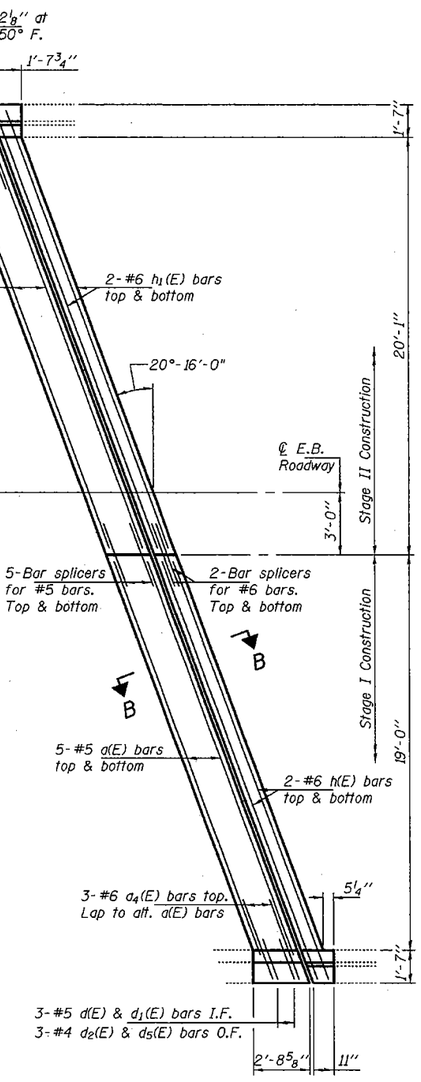

REPLACEMENT PLAN
North Abutment

DESIGNED		IJL
CHECKED		ATH
DRAWN	Kyle M. Steffen	
CHECKED	IJL	ATH

MARCH 9, 2010
EXAMINED — ENGINEER OF STRUCTURAL SERVICES
PASSED — ENGINEER OF BRIDGES AND STRUCTURES

Notes:
Hatched areas indicate removal.
For Sections A-A & B-B, bar details and Bill of Material, see sheet 4 of 7.

JOINT REPLACEMENT DETAILS
SN 101-0067 (E.B.)

SHEET NO. 2	F.A.I. RTE.	SECTION	COUNTY	TOTAL SHEETS	SHEET NO.
7 SHEETS	39	(4VBY, 4VBY-1, 5HB)M	WINNEBAGO	36	18
			CONTRACT NO. 64G12		
	FED. ROAD DIST. NO.	ILLINOIS	FED. AID PROJECT		

1010067.dgn 09-Mar-10 13:15:46

STATE OF ILLINOIS
DEPARTMENT OF TRANSPORTATION

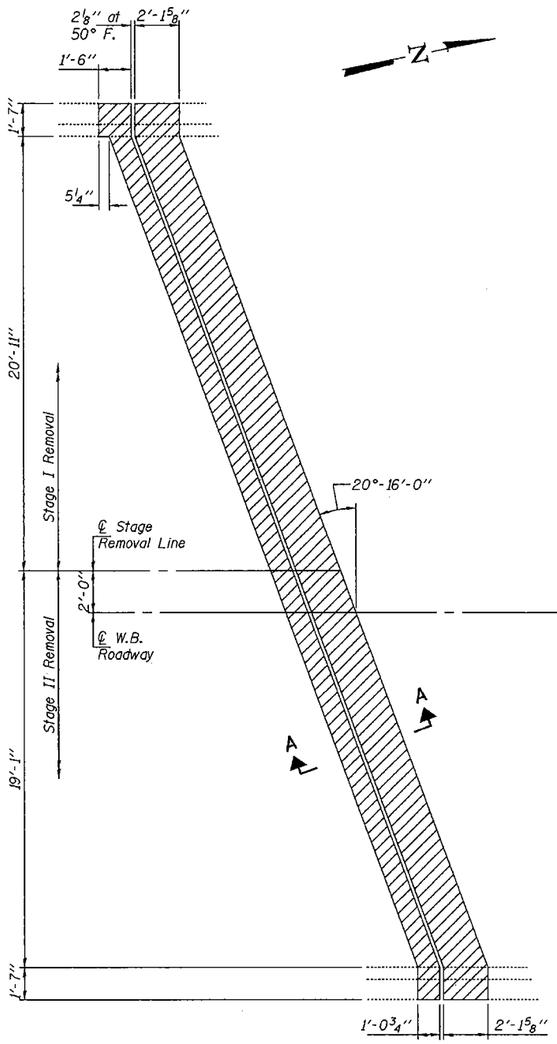

REMOVAL PLAN
South Abutment

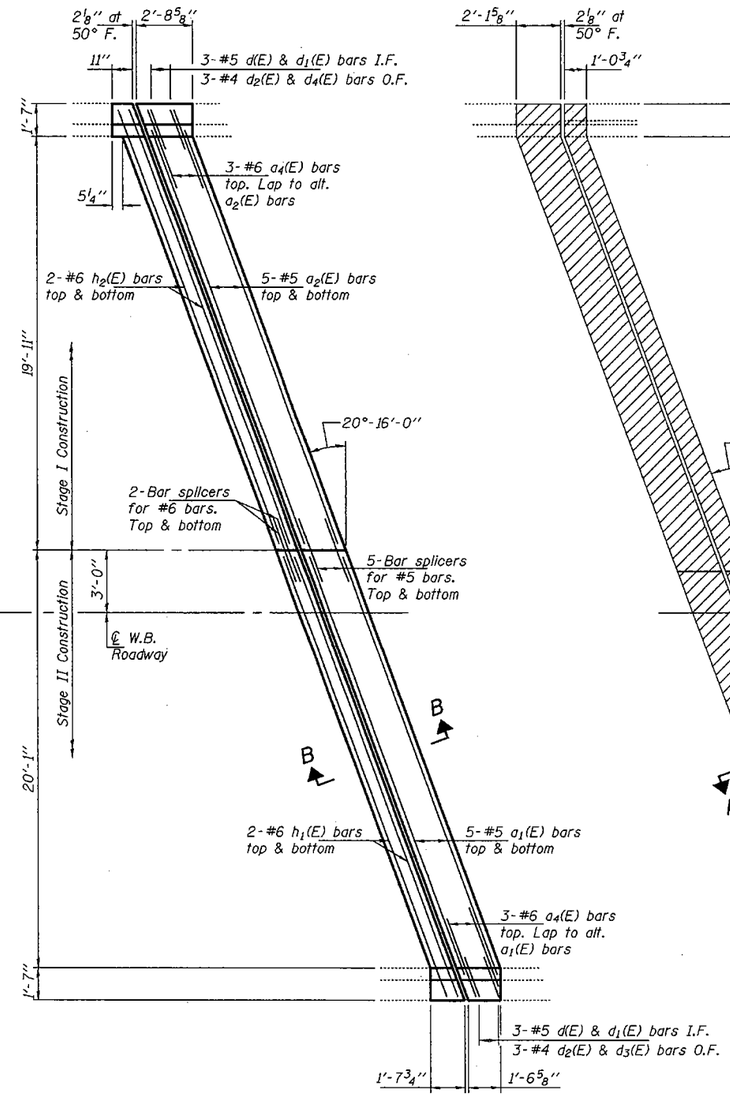

REPLACEMENT PLAN
South Abutment

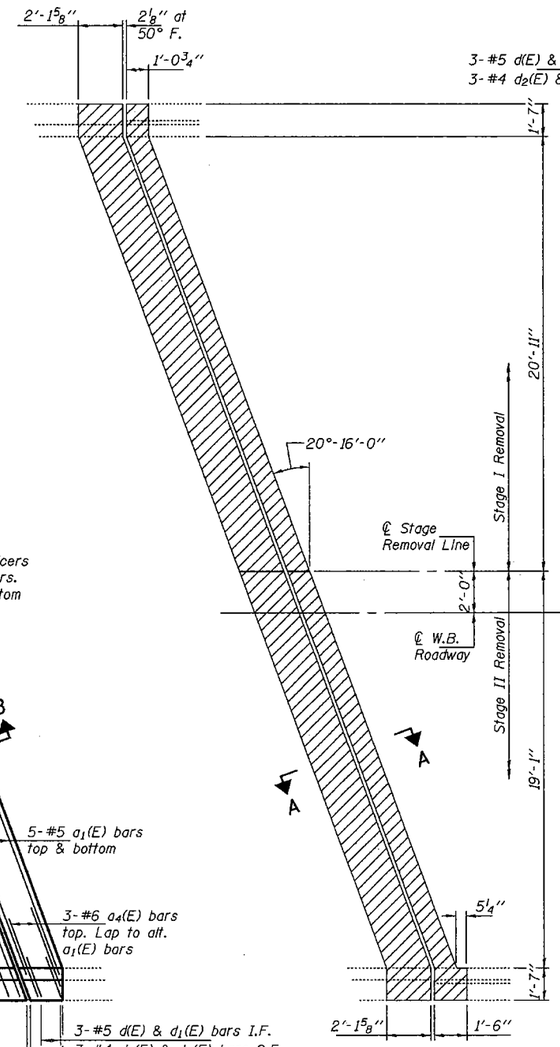

REMOVAL PLAN
North Abutment

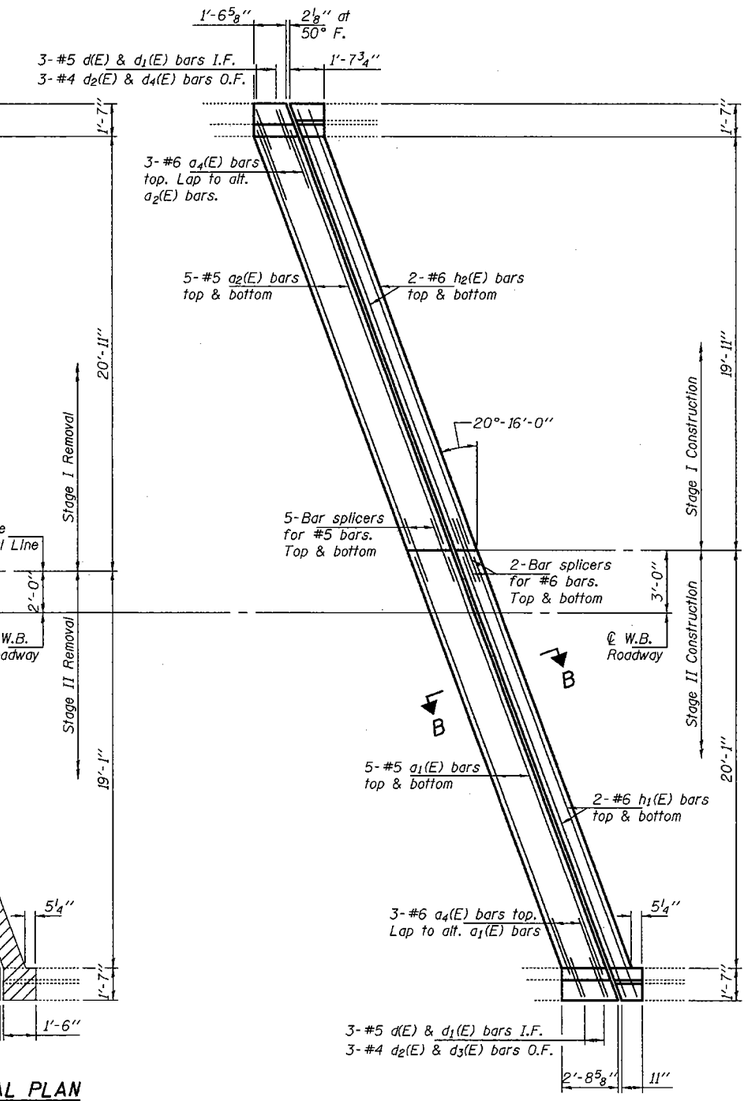

REPLACEMENT PLAN
North Abutment

DESIGNED		IJL
CHECKED		ATH
DRAWN	Kyle M. Steffen	
CHECKED	IJL	ATH

MARCH 9, 2010
EXAMINED — ENGINEER OF STRUCTURAL SERVICES
PASSED — ENGINEER OF BRIDGES AND STRUCTURES

Notes:
Hatched areas indicate removal.
For Sections A-A & B-B, bar details and Bill of Material, see sheet 4 of 7.

JOINT REPLACEMENT DETAILS
SN 101-0068 (W.B.)

SHEET NO. 3	F.A.I. RTE.	SECTION	COUNTY	TOTAL SHEETS	SHEET NO.
7 SHEETS	39	(4VBY, 4VBY-1, 5HB)M	WINNEBAGO	36	19
			CONTRACT NO. 64G12		
	FED. ROAD DIST. NO.	ILLINOIS	FED. AID PROJECT		

101006b7.dgn 09-Mar-10 13:15:46

STATE OF ILLINOIS
DEPARTMENT OF TRANSPORTATION

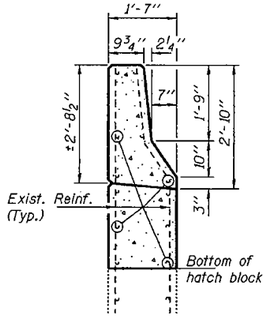

TYPICAL SECTION AT APPROACH PARAPET

Remove portion of wingwall as required at corners to allow clearance for new deck overhang. Cut reinf. flush and seal surface with epoxy. Cost included with Concrete Removal.

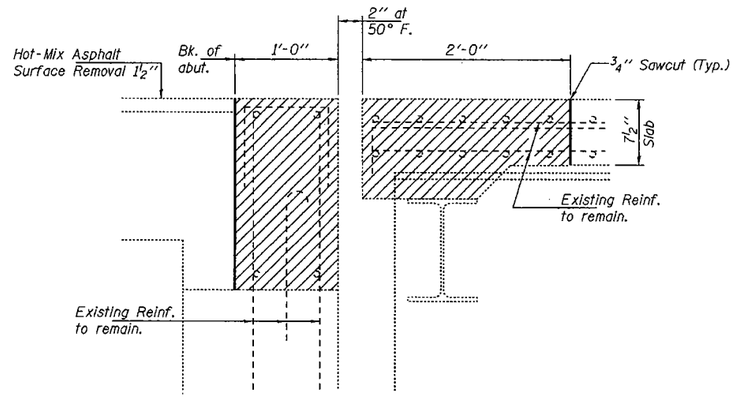

SECTION A-A

(Near ℄ Roadway)
(Dimensions are at RT L's to end of deck)

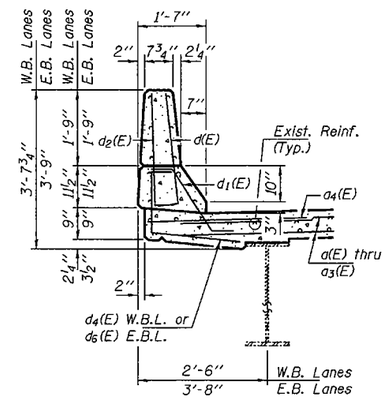

TYPICAL SECTION THRU WEST PARAPET

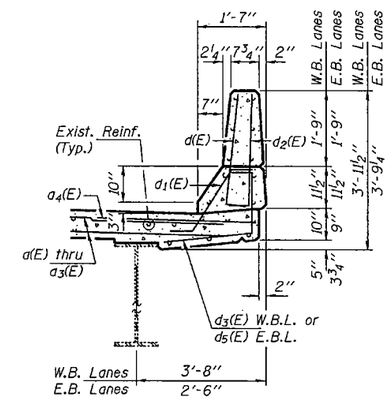

TYPICAL SECTION THRU EAST PARAPET

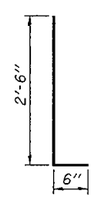

BARS d(E) & d2(E)

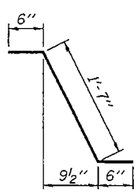

BARS d1(E)

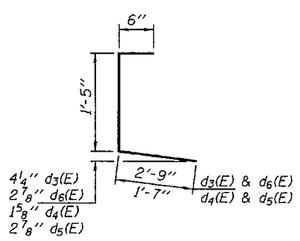

BARS d3(E) THRU d6(E)

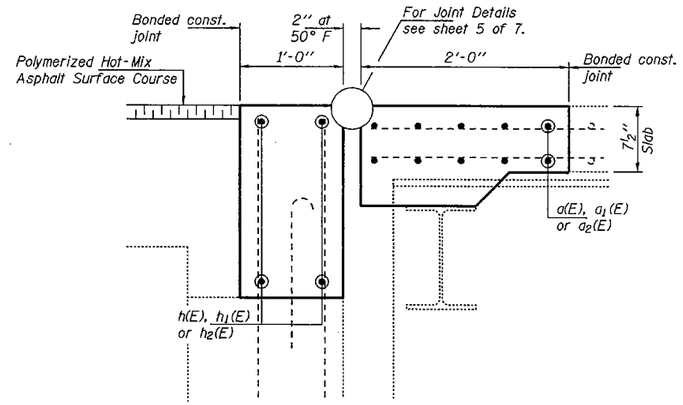

SECTION B-B

(Near ℄ Roadway)
(Dimensions are at RT L's to end of deck)

BILL OF MATERIAL SN 101-0067 (E.B.)

Bar	No.	Size	Length	Shape
d(E)	20	#5	20'-9"	
a1(E)	20	#5	21'-10"	
a4(E)	12	#6	4'-10"	
d(E)	12	#5	3'-0"	
d1(E)	12	#5	2'-7"	
d2(E)	12	#4	3'-0"	
d5(E)	6	#4	3'-6"	
d6(E)	6	#4	4'-8"	
h(E)	8	#6	21'-7"	
h1(E)	8	#6	22'-9"	
Concrete Removal			Cu. Yd.	13.5
Concrete Superstructure			Cu. Yd.	13.5
Reinforcement Bars, Epoxy Coated			Lbs.	1630

BILL OF MATERIAL SN 101-0068 (W.B.)

Bar	No.	Size	Length	Shape
a1(E)	20	#5	21'-10"	
a2(E)	20	#5	21'-8"	
a4(E)	12	#6	4'-10"	
d(E)	12	#5	3'-0"	
d1(E)	12	#5	2'-7"	
d2(E)	12	#4	3'-0"	
d3(E)	6	#4	4'-8"	
d4(E)	6	#4	3'-6"	
h1(E)	8	#6	22'-9"	
h2(E)	8	#6	22'-7"	
Concrete Removal			Cu. Yd.	13.9
Concrete Superstructure			Cu. Yd.	13.9
Reinforcement Bars, Epoxy Coated			Lbs.	1670

DESIGNED	IJL
CHECKED	ATH
DRAWN	Kyle M. Steffen
CHECKED	IJL ATH

MARCH 9, 2010
EXAMINED A. Carl Puzey
ENGINEER OF STRUCTURAL SERVICES
PASSED Ralph E. Anderson
ENGINEER OF BRIDGES AND STRUCTURES

JOINT REPLACEMENT DETAILS SN 101-0067 (EB) & 0068 (WB)

SHEET NO. 4	F.A.I. RTE.	SECTION	COUNTY	TOTAL SHEETS	SHEET NO.
7 SHEETS	39	(4VBY, 4VBY-1, 5HB)M	WINNEBAGO	36	20
			CONTRACT NO. 64G12		
	FED. ROAD DIST. NO.	ILLINOIS	FED. AID PROJECT		

10100067.dgn 09-Mar-10 12:15:47

* Granular or solid flux filled headed studs conforming to Article 1006.32 of the Std. Specs., automatically end welded.

STATE OF ILLINOIS
DEPARTMENT OF TRANSPORTATION

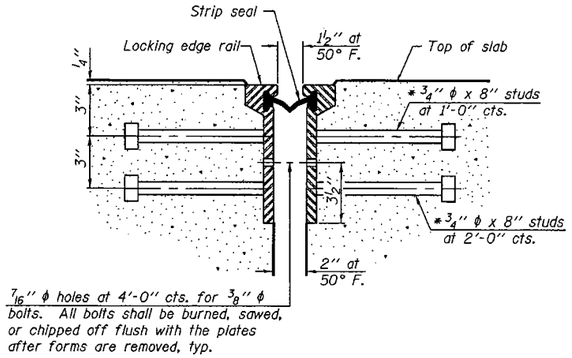

SECTION THRU ROLLED RAIL JOINT

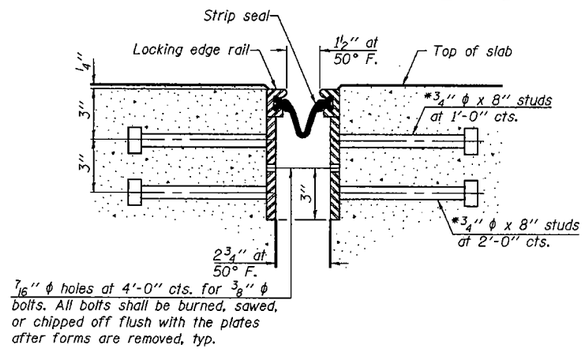

SECTION THRU WELDED RAIL JOINT

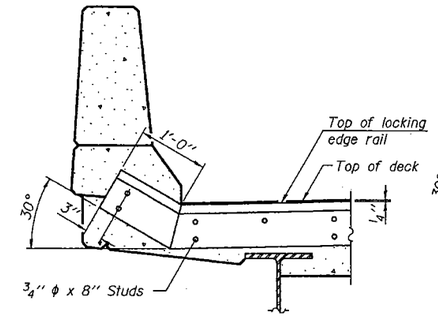

AT PARAPET

See Section A-A for end treatment of skews > 30°.

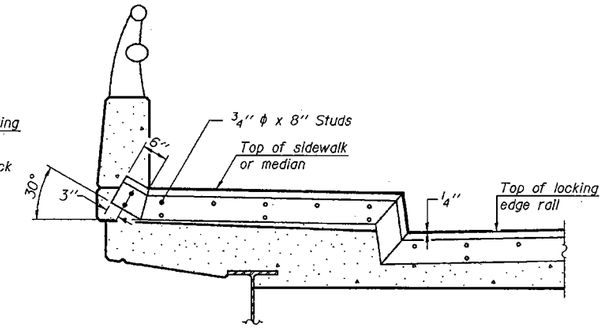

AT SIDEWALK OR MEDIAN

Shorter plates with a single row of studs at 12" cts. may be necessary on medians which are shallower than 9". See manufacturer's recommendation.

TYPICAL END TREATMENTS

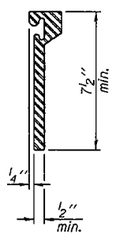

ROLLED EXTRUDED RAIL

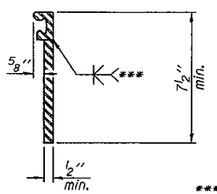

WELDED RAIL

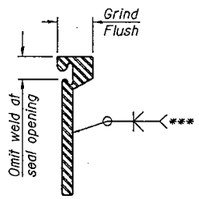

*** Back gouge not required if complete joint penetration is verified by mock-up.

LOCKING EDGE RAIL SPLICE

The inside of the locking edge rail groove shall be free of weld residue.

Rolled rail shown, welded rail similar.

LOCKING EDGE RAILS

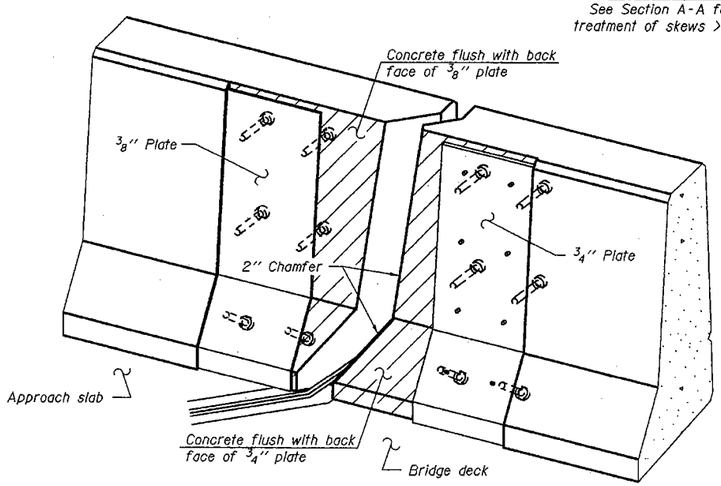

TRIMETRIC VIEW

(Showing back plates only)

Notes:

The strip seal shall be made continuous and shall have a minimum thickness of ¼". The configuration of the strip seal shall match the configuration of the Locking Edge Rails. Open or "webbed" strip seal gland configurations are not permitted. The gland shall be sized for a maximum rated movement of 4 inches.

The Locking Edge Rails depicted are conceptual only, except for the minimum dimensions shown. The actual configuration of the Locking Edge Rails and matching strip seal may vary from manufacturer to manufacturer. Flanged edge rails will not be allowed. Locking Edge Rails may be spliced at slope discontinuities.

The manufacturer's recommended installation methods shall be followed.

The joint opening and deck dimensions detailed on the superstructure are based on a rolled rail expansion joint. If the Contractor elects to use the welded rail expansion joint, the opening and deck dimensions shall be modified according to the dimensions detailed on this sheet. Required modifications shall be made at no additional cost to the State.

All steel components shall be galvanized after fabrication according to Article 520.03 of the Standard Specifications.

Maximum space between rail segments at stage lines shall be 3/16", sealed with a suitable sealant.

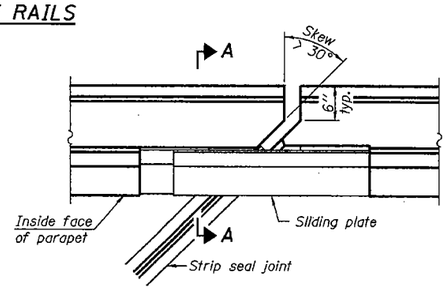

PLAN

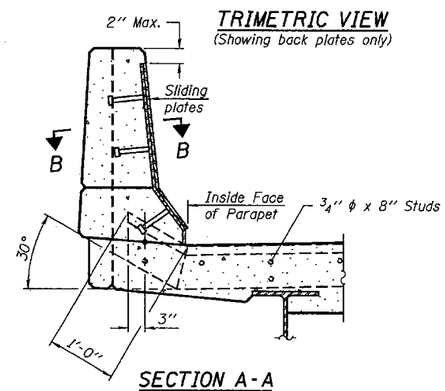

SECTION A-A

POINT BLOCK DETAILS

(for skews > 30°)

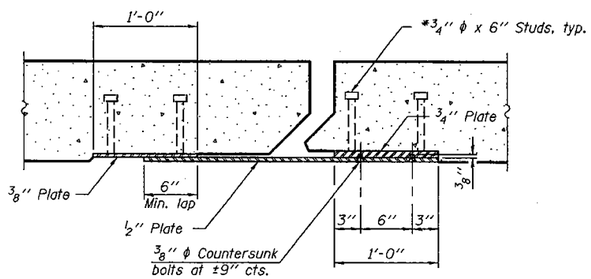

SECTION B-B

BILL OF MATERIAL

Item	Unit	Total
Preformed Joint Strip Seal	Foot	178

DESIGNED		IJL
CHECKED		ATH
DRAWN	Kyle M. Steffen	
CHECKED	IJL	ATH

EJ-SSJ 11-1-09

MARCH 9, 2010
EXAMINED A. Carl Prugy — ENGINEER OF STRUCTURAL SERVICES
PASSED Ralph E. Anderson — ENGINEER OF BRIDGES AND STRUCTURES

PREFORMED JOINT STRIP SEAL DETAILS
SN 101-0067 (E.B.) & 0068 (W.B.)

SHEET NO. 5	F.A.I. RTE.	SECTION	COUNTY	TOTAL SHEETS	SHEET NO.
7 SHEETS	39	(4VBY, 4VBY-1, 5HB)M	WINNEBAGO	36	21
			CONTRACT NO. 64G12		
	FED. ROAD DIST. NO.	ILLINOIS	FED. AID PROJECT		

10100067.dgn 09-Mar-10 12:32:47