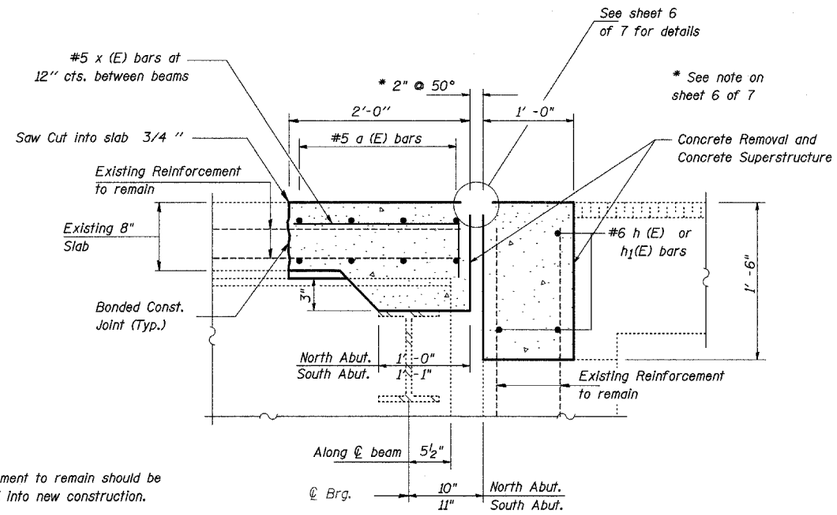

Note: Existing reinforcement to remain should be cleaned and incorporated into new construction.

SECTION THRU JOINT

(At Abutments)

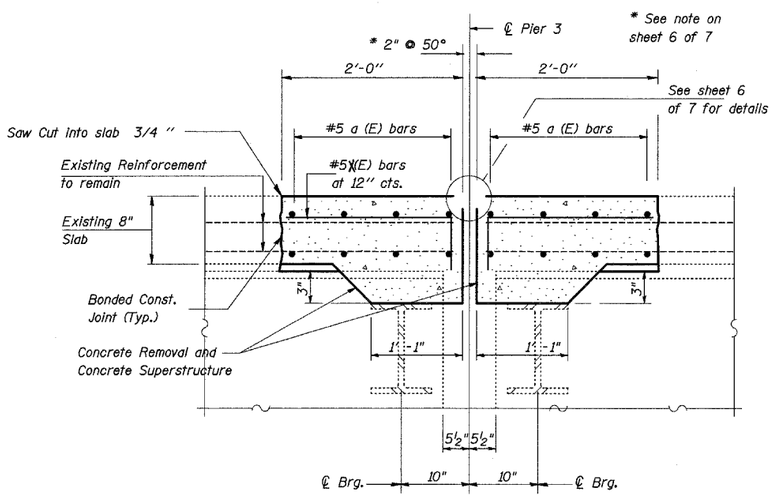

SECTION THRU JOINT

(At Pier 3)

Bill of Material

BAR	NO.	SIZE	LENGTH	SHAPE
a (E)	32	5	21' -9"	———
a_1 (E)	32	5	22' -3"	———
d (E)	24	4	5' -3"	⌋
d_1 (E)	24	5	3' -11"	⌋
h (E)	6	6	22' -9"	———
h_1 (E)	6	6	23' -3"	———
x (E)	180	5	2' -7"	⌐

CONCRETE SUPERSTRUCTURE	CU YD	18.0
CONCRETE REMOVAL	CU YD	18.0
REINFORCEMENT BARS, EPOXY COATED	POUND	2550
PREFORMED JOINT STRIP SEAL	FOOT	135
BAR SPLICERS	EACH	38
REM REIN T B TERM T1	EACH	4

JOINT DETAILS
IL 84 OVER PLUM RIVER
FA ROUTE 18 (IL 84)
SECTION 106BR
CARROLL COUNTY
STRUCTURE NUMBER 008-0028

* Various
** (106BR)M, (4B-2)M & 177-4B-3)M

FILE NAME = O:\BR\CADD plans\Various Counties\Contract *64D99 2008 expansion joints\0080028.dgn	USER NAME = linkdj	DESIGNED -	REVISED -	STATE OF ILLINOIS DEPARTMENT OF TRANSPORTATION	Joint Details	F.A. RTE.	SECTION	COUNTY	TOTAL SHEETS	SHEET NO.
	PLOT SCALE = 50.0000 ' / IN.	CHECKED -	REVISED -			*	**	Various	26	14
	PLOT DATE = Sat Mar 15 11:13:01 2008	DATE -	REVISED -		SCALE: None / SHEET NO. 5 OF 7 SHEETS / STA. TO STA.		ILLINOIS	CONTRACT NO. 64D99		
						FED. ROAD DIST. NO.	ILLINOIS	FED. AID PROJECT		