TYPICAL RIGHT SHOULDER

STA 108+00 TO 123+37
STA 131+33 TO 162+50
STA 169+85 TO 178+75

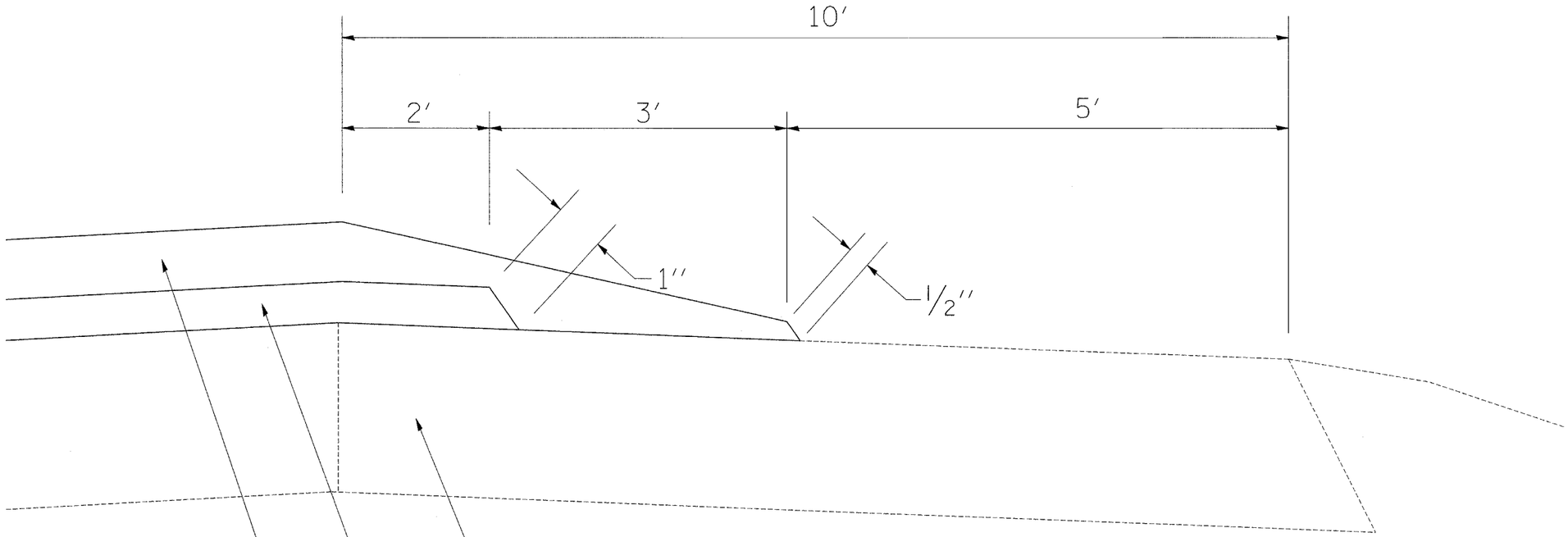

EXISTING SHOULDER

1'' POLYMERIZED LEVELING BINDER (MM), N105

1-1/2'' POLYMERIZED HMA SURFACE COURSE, MIX ''E'', N105

BITUMINOUS APPLICATION RATES

SURFACE MIXTURES: 119 LB/SY-IN

OTHER BITUMINOUS MIXTURES: 112 LB/SY-IN

BITUMINOUS MATERIAL (PRIME COAT): 0.000286 TON/SY

AGGREGATE (PRIME COAT): 0.0015 TON/SY

NOTE: TAPER SURFACE COURSE FROM 1-1/2'' TO 1/2'' IN 5 FT.

* D2 SPRING PATCHING 2007-2

FILE NAME = P:\1-80 resurfovr.dgn	USER NAME = grantpm	DESIGNED -	REVISED -	STATE OF ILLINOIS DEPARTMENT OF TRANSPORTATION	TYPICAL SECTIONS			F.A.I. RTE.	SECTION	COUNTY	TOTAL SHEETS / SHEET NO.
		DRAWN -	REVISED -					80	*	ROCK ISLAND	31 / 13
	PLOT SCALE = 50.000 ' / IN.	CHECKED -	REVISED -							CONTRACT NO. 64D34	
	PLOT DATE = Thu May 15 11:03:29 2008	DATE -	REVISED -		SCALE:	SHEET NO. OF SHEETS	STA. TO STA.	FED. ROAD DIST. NO.	ILLINOIS	FED. AID PROJECT	