TYPICAL SECTION

STA 59+48 TO 89+25

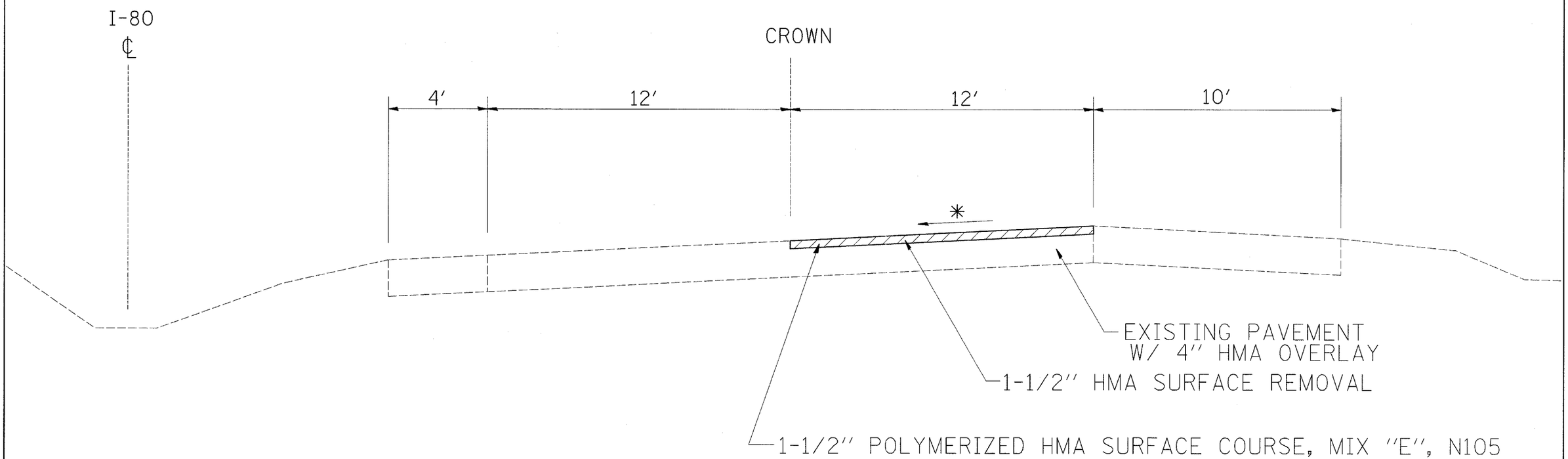

BITUMINOUS APPLICATION RATES

SURFACE MIXTURES: 119 LB/SY-IN

OTHER BITUMINOUS MIXTURES: 112 LB/SY-IN

BITUMINOUS MATERIAL (PRIME COAT): 0.000286 TON/SY

AGGREGATE (PRIME COAT): 0.0015 TON/SY

* MAINTAIN EXISTING X-SLOPE

* D2 SPRING PATCHING 2007-2

FILE NAME = P:\i-80 resurfcvr.dgn	USER NAME = grantpm	DESIGNED -	REVISED -	STATE OF ILLINOIS DEPARTMENT OF TRANSPORTATION	TYPICAL SECTIONS	F.A.I. RTE.	SECTION	COUNTY	TOTAL SHEETS	SHEET NO.
		DRAWN -	REVISED -			80	*	ROCK ISLAND	31	6
	PLOT SCALE = 50.000 ′ / IN.	CHECKED -	REVISED -					CONTRACT NO. 64D34		
	PLOT DATE = Thu May 15 11:03:28 2008	DATE -	REVISED -		SCALE: SHEET NO. OF SHEETS STA. TO STA.	FED. ROAD DIST. NO.	ILLINOIS	FED. AID PROJECT		