CONTRACT NO. 63023

Engineering Enterprises, Inc.

F.A. RTE.	SECTION	COUNTY	TOTAL SHEETS	SHEET NO.
N/A	06-00017-00-PV	KANE	232	117
STA.		TO STA.		
FED. ROAD DIST. NO. _	ILLINOIS	FED. AID PROJECT		

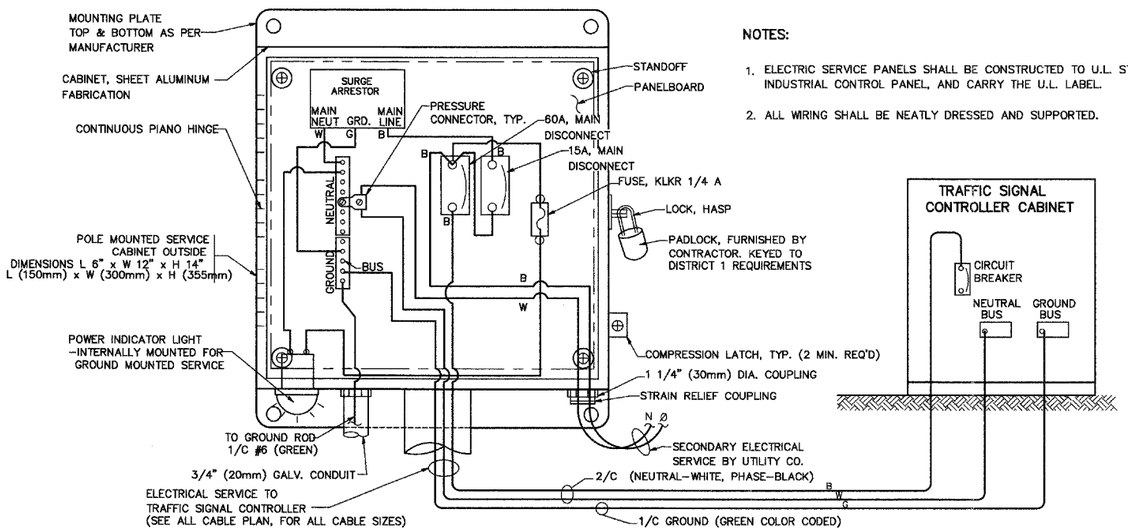

ELECTRICAL SERVICE - PANEL DIAGRAM (TYPICAL FOR POLE AND GROUND MOUNTED SERVICE)

SERVICE INSTALLATION POLE MOUNT (SHOWN)

(NOT TO SCALE)

NOTES:

1. ELECTRIC SERVICE PANELS SHALL BE CONSTRUCTED TO U.L. STD 508, INDUSTRIAL CONTROL PANEL, AND CARRY THE U.L. LABEL.
2. ALL WIRING SHALL BE NEATLY DRESSED AND SUPPORTED.

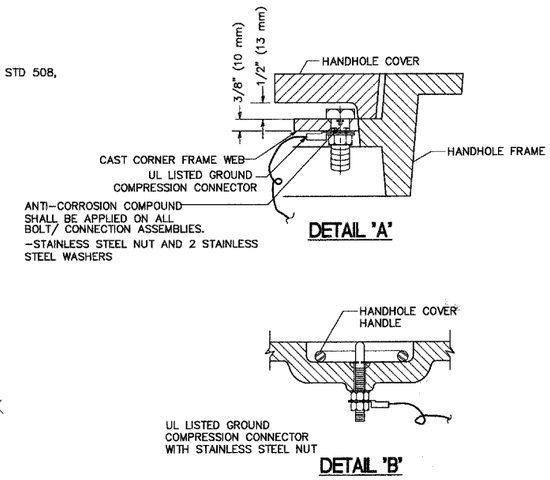

NOTES:

GROUNDING SYSTEM

1. THE GROUNDING SYSTEM SHALL CONSIST OF AN INSULATED CONDUCTOR TYPE XLP, NO. 6 A.W.G., STRANDED COPPER TO BE INSTALLED IN RACEWAYS. THE GROUNDING CABLE SHALL BE INSTALLED IN A CONTINUOUS MANNER AS SHOWN ON THE CABLE PLAN PROVIDED. ALL GROUNDING CONDUCTORS SHALL BE BONDED TO METAL ENCLOSURE (HANDHOLE, POST, MAST ARM, CONTROLLER, ETC,). GROUND ROD SHALL BE 3/4" DIA. x 10'-0" (20mm x 3.0m) LONG, COPPER CLAD. ONE GROUND ROD SHALL BE INSTALLED AT ALL POST FOUNDATIONS, POLE FOUNDATIONS, CONTROLLER CABINET FOUNDATION AND ELECTRICAL SERVICE INSTALLATION AS INDICATED ON THE CABLE PLAN. IF THERE ARE ANY SPECIAL CONDITIONS SUCH AS SUB-SURFACE CONDITIONS OR INSTALLATION PROBLEMS, THE RESIDENT ENGINEER SHALL BE NOTIFIED OR CONTACT THE BUREAU OF TRAFFIC, ILLINOIS DEPARTMENT OF TRANSPORTATION DISTRICT ONE AT (847) 705-4139.
2. THE NEUTRAL CONDUCTOR AND THE GROUND CONDUCTOR SHALL BE CONNECTED IN THE SERVICE INSTALLATION. AT NO OTHER POINT IN THE TRAFFIC SIGNAL SYSTEM SHALL THE NEUTRAL AND GROUND CONDUCTORS BE CONNECTED.
3. ALL EQUIPMENT GROUNDING CONDUCTORS SHALL TERMINATE AT THE GROUND BUS IN THE CONTROLLER CABINET.
4. THE CONTRACTOR SHALL PROVIDE A GROUND CABLE WITH CONNECTORS BETWEEN THE HANDHOLE COVER AND HANDHOLE FRAME.

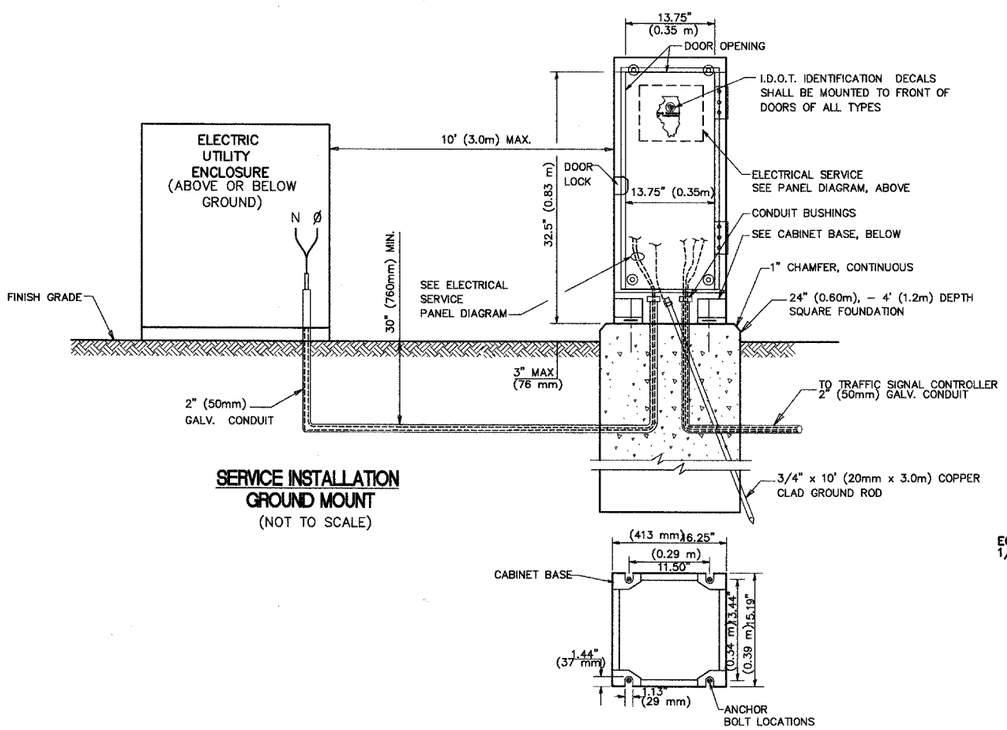

SERVICE INSTALLATION GROUND MOUNT

(NOT TO SCALE)

CABINET - BASE BOLT PATTERN

(NOT TO SCALE)

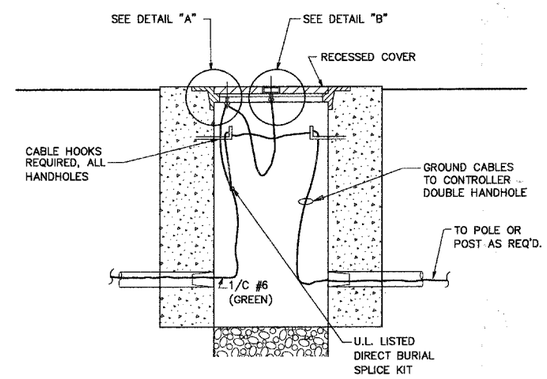

HANDHOLE COVER + FRAME - GROUNDING DETAIL

(NOT TO SCALE)

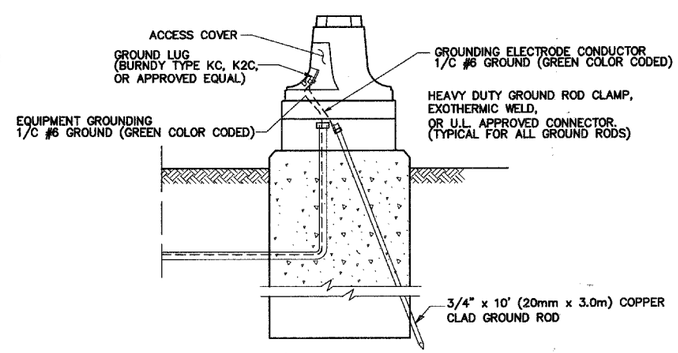

MAST ARM POLE / POST-GROUNDING DETAIL

(NOT TO SCALE)

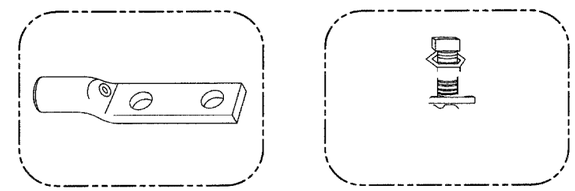

HEAVY-DUTY COMPRESSION TERMINAL (BURNDY TYPE YGHA OR APPROVED EQUAL)

3/4" (20mm) HEAVY-DUTY GROUND ROD CLAMP (BURNDY TYPE GRC OR APPROVED EQUAL)

NOTES:

- ALL CLAMPS SHALL BE BRONZE OR COPPER, UL APPROVED.
- GROUND CABLE SHALL BE LOOPED OVER HOOKS IN THE HANDHOLES
  6.5' (2.0m) SLACK SHALL BE PROVIDED IN SINGLE HANDHOLES
  13' (4.0m) OF SLACK SHALL BE PROVIDED IN DOUBLE HANDHOLES.
  5' (1.4m) OF SLACK SHALL BE PROVIDED BETWEEN FRAME AND COVER.

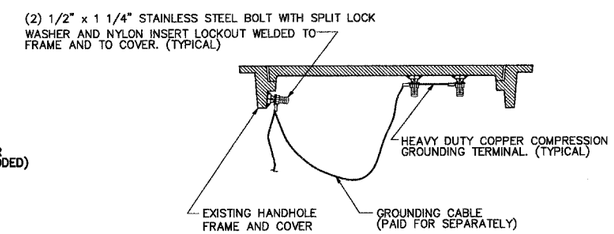

EXISTING HANDHOLE COVER + FRAME - GROUNDING DETAIL

(NOT TO SCALE)

REVISIONS	
NAME	DATE

ILLINOIS DEPARTMENT OF TRANSPORTATION

DISTRICT ONE
STANDARD TRAFFIC SIGNAL
DESIGN DETAILS

SCALE: NTS — DRAWN BY: KKP

DATE: 05/16/08 — CHECKED BY: TVW

PLAN	DATE	BY
SURVEYED		
PLOTTED		
ALIGNMENT CHECKED		
RT. OF WAY CHECKED		
CADD FILE NAME		
NOTE BOOK NO.		

PROFILE	DATE	BY
SURVEYED		
PLOTTED		
GRADES CHECKED		
B.M. NOTED		
STRUCTURE NOTATNS CHKD		
NOTE BOOK NO.		

Plotted: May 28, 2008 @ 6:10 AM By: Kris Pung - Tab: 117 SIG DETS (22x34)

Path: H:\SDSKPROJ\SG0548\DWG\SG0732\DWG FINAL ENG\CONTRACT B\B-SG0548-SIGDETS