CONTRACT NO. 63023

Engineering Enterprises, Inc.	F.A. RTE.	SECTION	COUNTY	TOTAL SHEETS	SHEET NO.
	N/A	06-00017-00-PV	KANE	232	14
	STA.		TO STA.		
	FED. ROAD DIST. NO. _	ILLINOIS	FED. AID PROJECT		

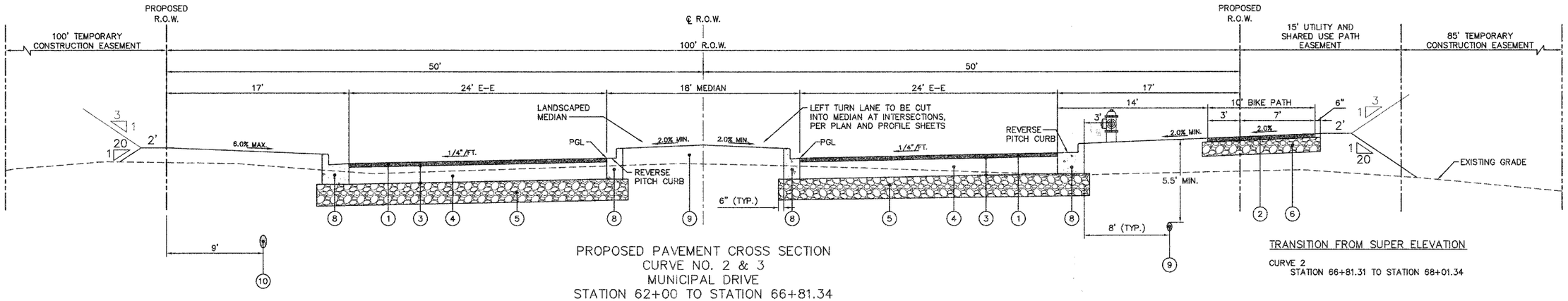

PROPOSED PAVEMENT CROSS SECTION
CURVE NO. 2 & 3
MUNICIPAL DRIVE
STATION 62+00 TO STATION 66+81.34

TRANSITION FROM SUPER ELEVATION

CURVE 2
STATION 66+81.31 TO STATION 68+01.34

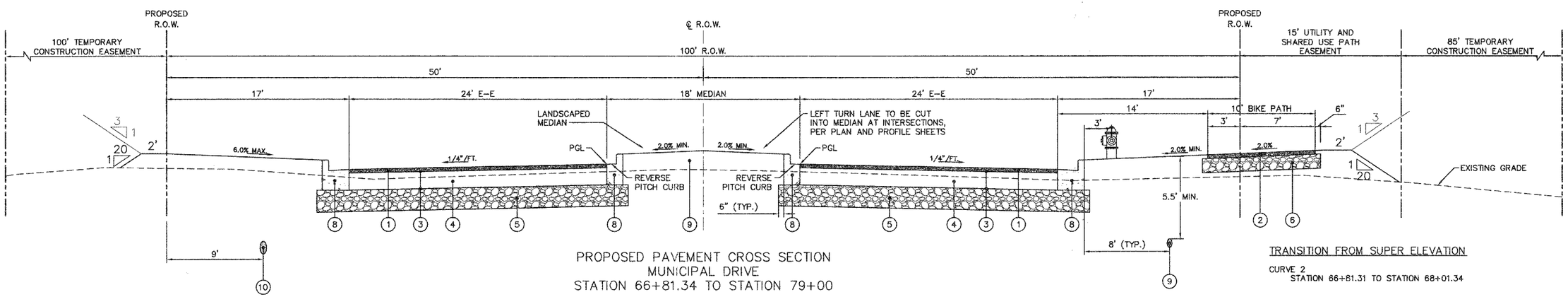

PROPOSED PAVEMENT CROSS SECTION
MUNICIPAL DRIVE
STATION 66+81.34 TO STATION 79+00

TRANSITION FROM SUPER ELEVATION

CURVE 2
STATION 66+81.31 TO STATION 68+01.34

LEGEND

1. HOT-MIX ASPHALT SURFACE COURSE, MIX "D", N70, 2"
2. EXISTING HOT-MIX ASPHALT SURFACE COURSE, MIX "C", N50, 2"
3. EXISTING BITUMINOUS MATERIAL (PRIME COAT)
4. EXISTING HOT-MIX ASPHALT BINDER COURSE, IL-19.0, N70, 9"
5. EXISTING AGGREGATE SUBGRADE, 12"
6. EXISTING SUB-BASE GRANULAR MATERIAL, TYPE B, 8"
7. EXISTING COMBINATION CONCRETE CURB AND GUTTER, B-6.12
8. EXISTING COMBINATION CONCRETE CURB AND GUTTER, B-6.24
9. EXISTING WATER MAIN
10. EXISTING STORM SEWER
11. EXISTING CONCRETE MEDIAN, TYPE SB-6.12

REVISIONS	
NAME	DATE

ILLINOIS DEPARTMENT OF TRANSPORTATION

TYPICAL CROSS SECTIONS

SCALE: NTS
DRAWN BY:
DATE: 02/07/08
CHECKED BY: WBR

PLAN	BY	DATE
SURVEYED		
PLOTTED		
ALIGNMENT CHECKED		
RT. OF WAY CHECKED		
CADD FILE NAME		
NOTE BOOK		
NO.		

PROFILE	BY	DATE
SURVEYED		
PLOTTED		
GRADES CHECKED		
S.M. NOTED		
STRUCTURE NOTAT'NS CHKD		
NOTE BOOK		
NO.		

Plotted: June 12, 2008 @ 11:35 AM By: Kris Pung - Tab: 14 SEC (22x34)

Path: H:\SDSKPROJ\S00548\DWG\S00732\DWG FINAL ENG\CONTRACT B\B-S00548-TYPSEC