CONTRACT NO. 63023

Engineering Enterprises, Inc.	F.A. RTE.	SECTION	COUNTY	TOTAL SHEETS	SHEET NO.
	N/A	06-00017-00-PV	KANE	232	125
	STA.		TO STA.		
	FED. ROAD DIST. NO. _	ILLINOIS	FED. AID PROJECT		

TEMPORARY CABLE PLAN
STAGE 3
N.T.S.

N.T.S.

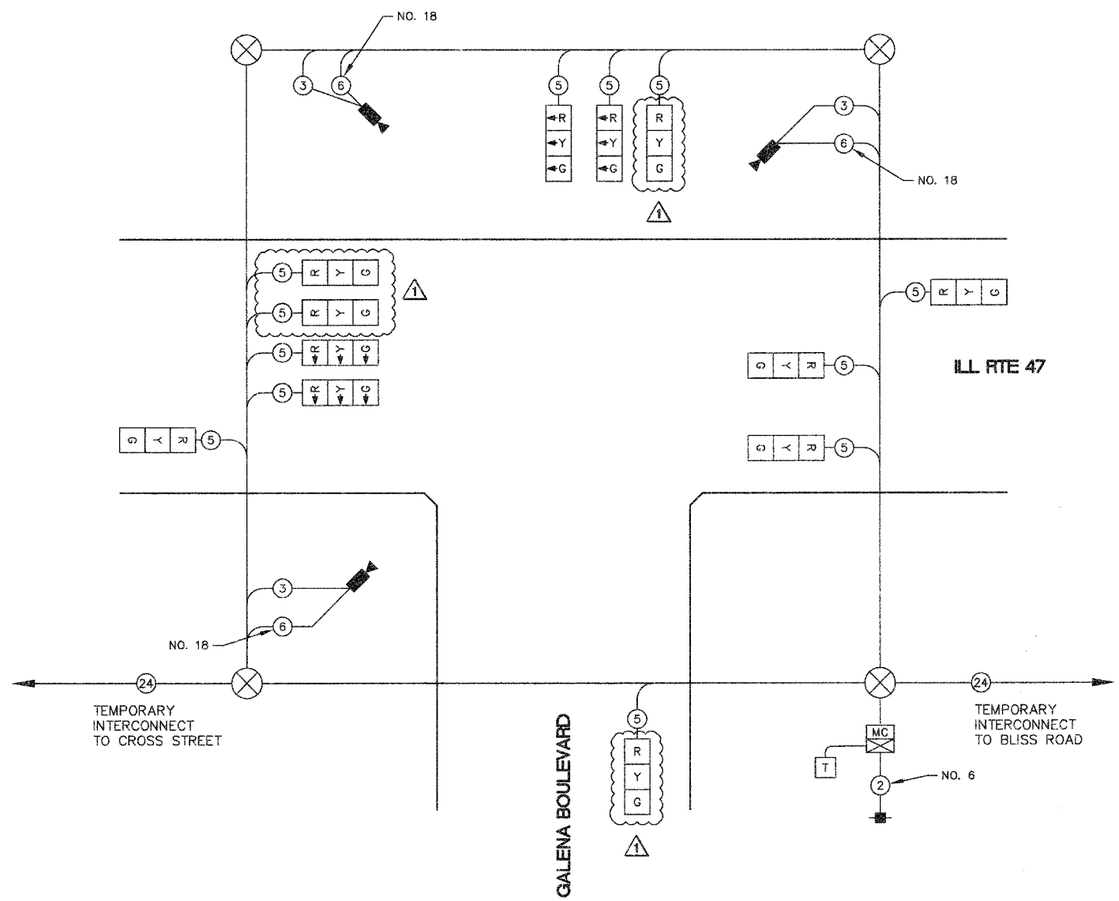

TEMPORARY CONTROLLER SEQUENCE
STAGE 3

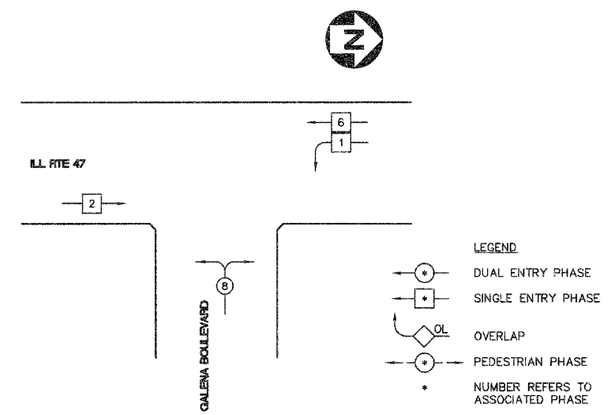

TEMPORARY PHASE DESIGNATION DIAGRAM

TEMPORARY CABLE DIAGRAM LEGEND

- R — TEMPORARY TRAFFIC SIGNAL SECTION OR PEDESTRIAN SIGNAL SECTION 12" (300mm)
- TEMPORARY CONTROLLER CABINET
- MC — TEMPORARY MASTER CONTROLLER
- TEMPORARY SERVICE INSTALLATION
- (5) — INDICATES NUMBER OF CONDUCTORS IN CABLE. ALL CONDUCTORS TO BE NUMBER 14 AWG WIRE UNLESS OTHERWISE NOTED.
- (24) — TEMPORARY INTERCONNECT CABLE NO 62.5/1250 MM 12F AND SM 12F FIBER OPTIC CABLE
- EMERGENCY VEHICLE DETECTOR
- CONFIRMATION BEACON
- VEHICLE DETECTOR, INDUCTION LOOP
- PEDESTRIAN PUSHBUTTON DETECTOR
- 12" (300mm) PEDESTRIAN SIGNAL SECTION
- VIDEO VEHICLE SENSOR
- T — TELEPHONE CONNECTION

I.D.O.T. TRAFFIC SIGNAL INSTALLATION ELECTRICAL SERVICE REQUIREMENTS					TOTAL WATTAGE
TYPE	NO. LAMPS	WATTAGE INCAND.	WATTAGE LED	% OPERATIONS	
SIGNAL (RED)	12		17	0.50	102.00
(YELLOW)	12		25	0.25	75.00
(GREEN)	12		15	0.25	45.00
ARROW	–		12	0.10	–
PED. SIGNAL	–		25	1.00	–
CONTROLLER	1	1	100	1.00	100.00
ILLUM. SIGN	–		–	0.05	–
FLASHER				0.50	–
				TOTAL =	322.00

1

ENERGY COST – BILLED TO: VILLAGE OF SUGAR GROVE
(ADDRESS) 10 MUNICIPAL DRIVE
SUGAR GROVE, IL 60554

ENERGY SUPPLY – CONTACT: MARK SCHERIBEL
PHONE: 630-862-5160
COMPANY: COMED

1 REVISED 7/17/08

REVISIONS	
NAME	DATE

ILLINOIS DEPARTMENT OF TRANSPORTATION

ILL RTE 47
AND
GALENA BOULEVARD
TEMPORARY SIGNAL CABLE PLAN,
PHASE DESIGNATION DIAGRAM
(STAGE 3)

SCALE: NTS — DRAWN BY: KKP
DATE: 05/16/08 — CHECKED BY: TVW

PLAN	BY	DATE
SURVEYED		
PLOTTED		
ALIGNMENT CHECKED		
RT. OF WAY CHECKED		
NOTE BOOK		
NO.	CADD FILE NAME	

PROFILE	BY	DATE
SURVEYED		
PLOTTED		
GRADES CHECKED		
B.M. NOTED		
NOTE BOOK	STRUCTURE NOTATIONS CHKD	
NO.		

Plotted: July 18, 2008 @ 11:33 AM By: Kris Pung - Tab: 125 TEMP CABLE (22x34)

Path: H:\SUSGPROJ\SG0546\DWG\SG0732\DWG FINAL ENG\CONTRACT BYD-SG0546-TEMPSIG