F.A.I.	SECTION	COUNTY	TOTAL SHEETS	SHEET NO.
94/90	•	COOK	25	14
STA.		TO STA.		
FED. ROAD DIST. NO.	ILLINOIS	FED. AID PROJECT		

62988

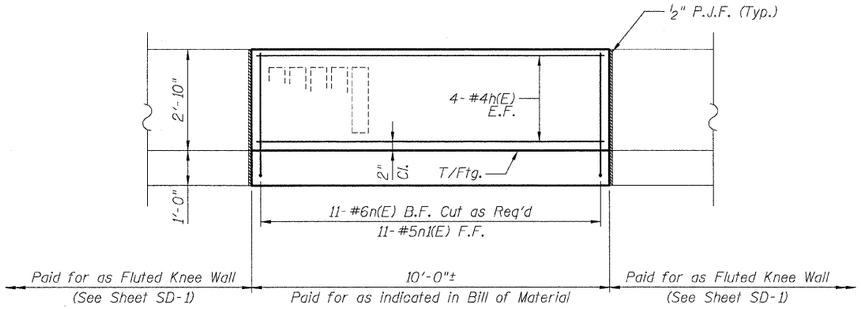

DETAIL A - ELEVATION

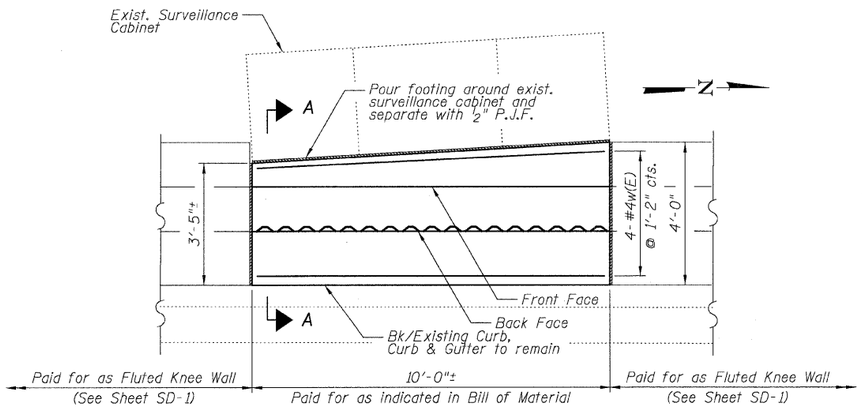

DETAIL A - PLAN

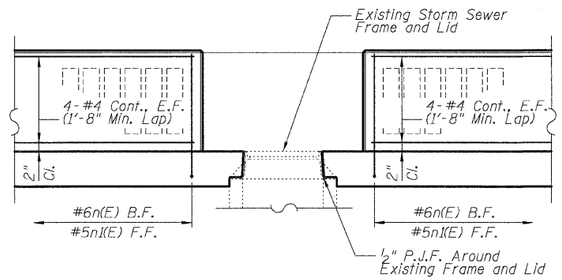

DETAIL B - ELEVATION

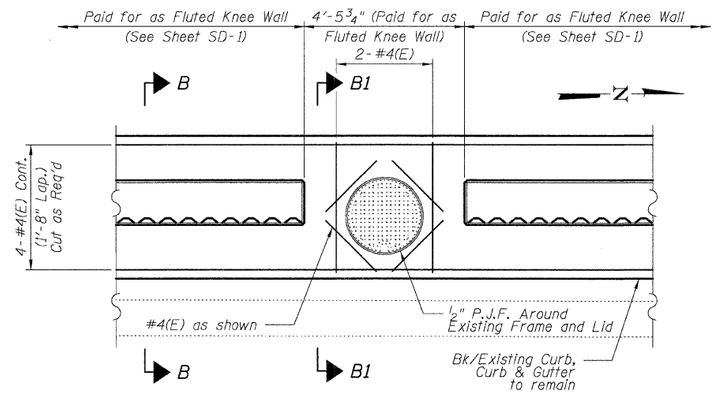

DETAIL B - PLAN

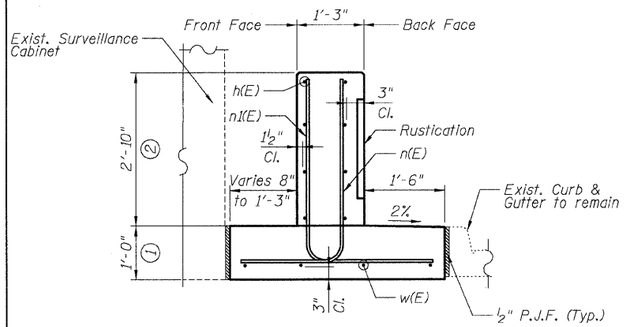

SECTION A-A

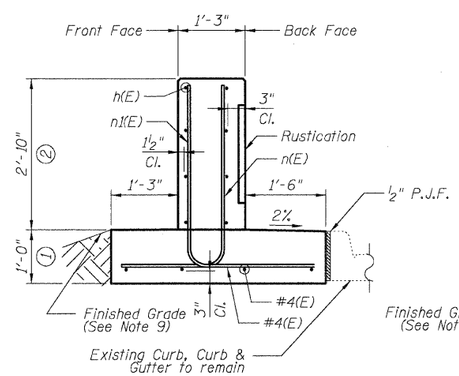

SECTION B-B

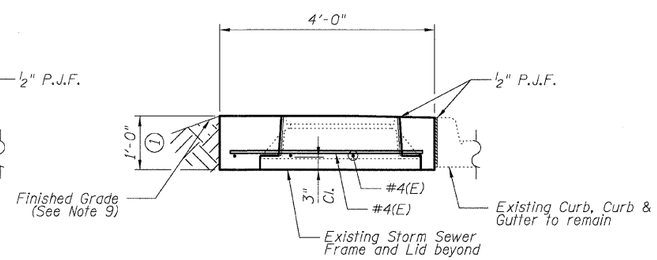

SECTION B1-B1

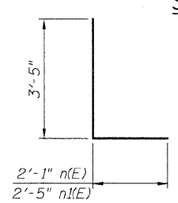

Bar n(E) & n1(E)

DETAIL A REINFORCEMENT SCHEDULE AND BILL OF MATERIAL

Bar	No.	Size	Length	Shape
h(E)	8	#4	9'-8"	——
n(E)	11	#6	5'-6"	L
n1(E)	11	#5	5'-10"	L
w(E)	4	#4	9'-8"	——

	Item	Unit	Qty.
1	Concrete Structures	Cu. Yd.	1.4
2	Concrete Superstructure	Cu. Yd.	1.4
	Reinforcement Bars, Epoxy Coated	Pound	240
	Rustication Finish	Sq. Ft.	19
	Protective Coat	Sq. Yd.	7

NOTES:

1. All stations and offsets measured from S. La Salle St. ℄.
2. Back Face is face adjacent to Frontage Rd. and Front Face is face adjacent to Expressway.
3. Concrete: f'c = 3500 psi
4. Provide California Finish on top of foundation between stem and Frontage Road. See Roadway Details.
5. At locations where Fluted Knee Wall abuts a rigid Structure, a ½" thick Preformed Expansion Joint Filler conforming to the shape of the Structure shall be installed between the Fluted Knee Wall and the Structure.
6. Apply Protective Coat to top and back face of stem and top of Frontage Road side of foundation.
7. For Fluted Knee Wall standard details, see Sheet SD-1
8. B.F. = Back Face (Frontage Road Side)
   F.F. = Front Face (Expressway Side)
   E.F. = Each Face
9. Shape finished grade as required to match existing conditions.
10. P.J.F. included in cost of concrete structures.

BOWMAN, BARRETT & ASSOCIATES INC.
CONSULTING ENGINEERS
Chicago, Illinois
312.228.0100
www.bbandainc.com

SHEET SD-2

REVISIONS	
NAME	DATE
ADDENDUM 1	7-16-08

ILLINOIS DEPARTMENT OF TRANSPORTATION

F.A.I. 94/90 (DAN RYAN EXPRESSWAY)

NORTHBOUND KNEE WALLS (47TH ST TO 45TH ST)

DETAILS A & B

SCALE: NTS

DATE: 04/25/08

DRAWN BY: TL

CHECKED BY: BLU

N:\660\cadd\dwl\31A\SHEET\5\660_31A5W502.dgn

5:49:29 PM

7/16/2008