STATE OF ILLINOIS
DEPARTMENT OF TRANSPORTATION

ROUTE NO.	SECTION	COUNTY	TOTAL SHEETS	SHEET NO.
F.A.P. 338	114R-1	WILL	355	268
FED. ROAD DIST. NO. 7	ILLINOIS	FED. AID PROJECT-		

SHEET NO. S2-2
8 SHEETS

Contract # 62416

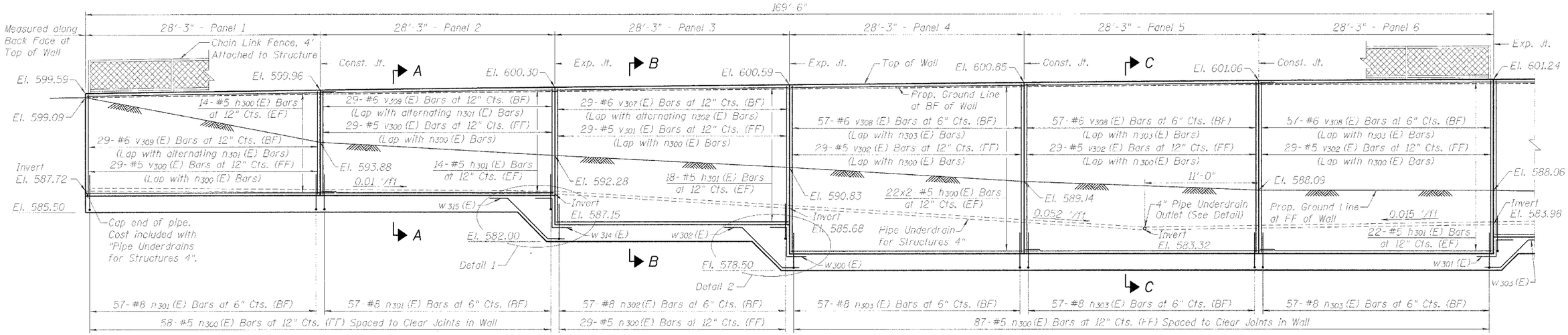

ELEVATION
(Looking West)

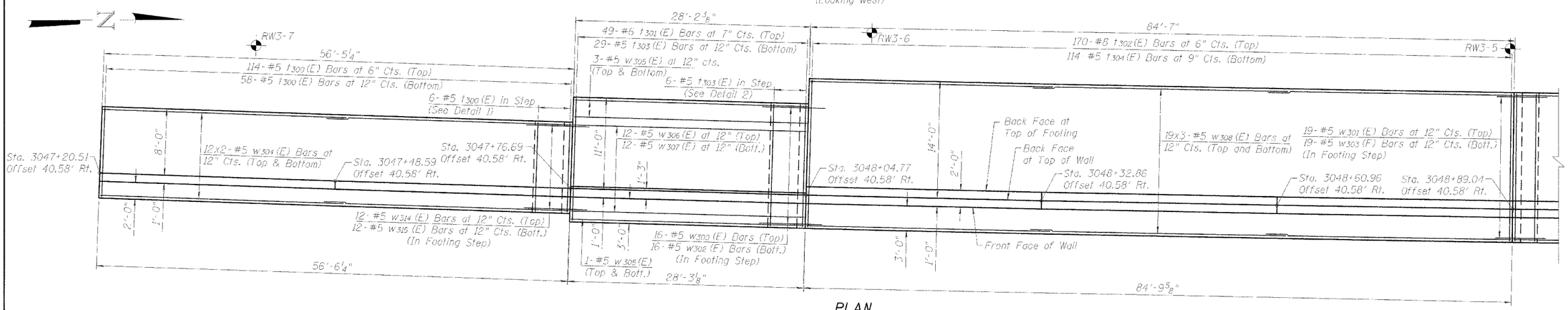

PLAN

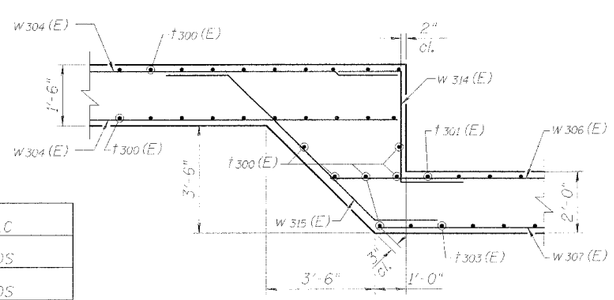

DETAIL 1

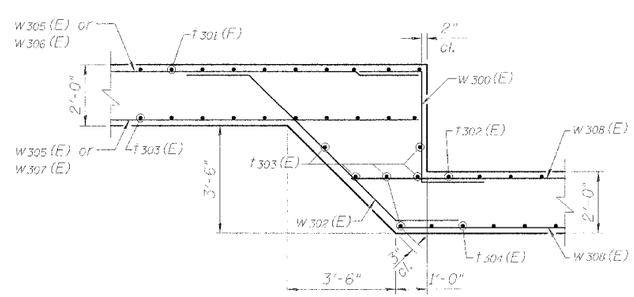

DETAIL 2

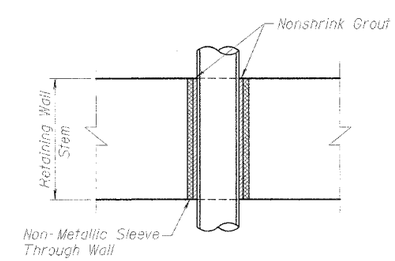

PIPE OUTLET THRU WALL

Furnishing and installing Non-Metallic Sleeve and Grout is included in the cost of "Concrete Structures".

LEGEND

Soil Boring Location

Notes:
1. For Sections A-A, B-B & C-C, see Sheet S2-5.
2. For Construction and Expansion Joint details see Sheet S2-5.
3. Bars indicated thus 19x3-#5 etc. indicates 19 lines of bars with 3 lengths per line.

DESIGNED	SLC
CHECKED	MDS
DRAWN	MDS
CHECKED	SLC

PLAN AND ELEVATION I

RETAINING WALL ALONG IL ROUTE 59
F.A.P. ROUTE 338 SECTION 114R-1
WILL COUNTY
STATION 3047+20.51 TO STATION 3051+44.64
STRUCTURE NO. 099-W016

TranSystems
1051 PERIMETER DRIVE, SUITE 1025
SCHAUMBURG, IL 60173-5059
TEL (847) 605-9600
FAX (847) 605-9610

3/28/08

$USER$
$DATE$ $TIME$
G:\CH02-0002\S1-up\Drawings\PEC\Cast-Wall.dgn