CUMBERLAND AVE.

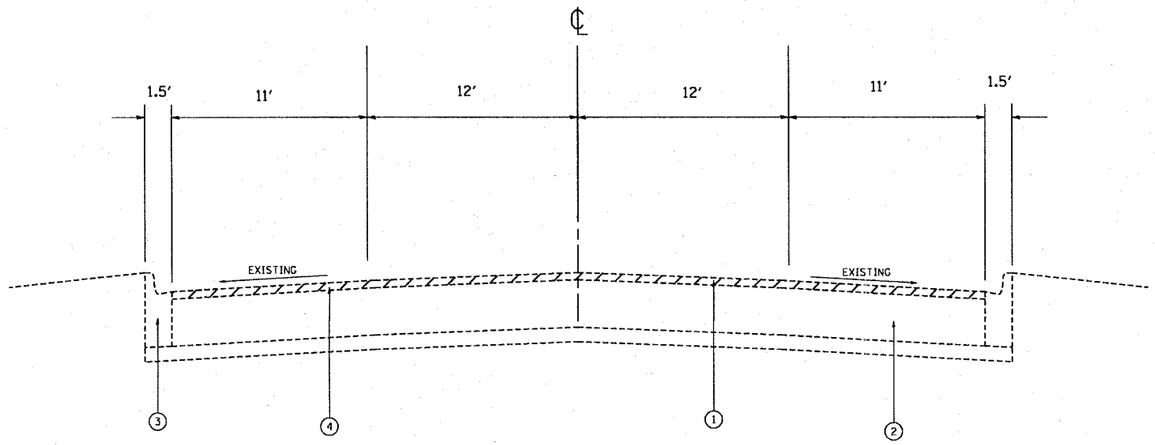

EXISTING

STA 56+60 TO STA 85+46

CUMBERLAND AVE.

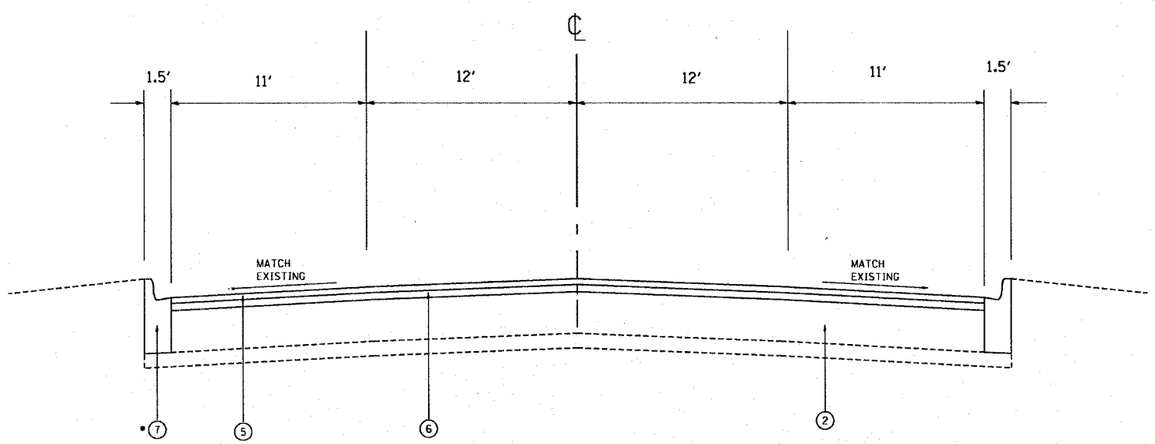

PROPOSED

STA 56+60 TO STA 85+46

LEGEND

1. EXISTING HMA OVERLAY (VARIES FROM 1½″ - 3″)
2. EXISTING PCC PAVEMENT (10″)
3. EXISTING CONCRETE CURB AND GUTTER, TYPE B-6.12
4. PROPOSED HMA SURFACE REMOVAL, 2½″
5. PROPOSED HMA SURFACE COURSE, MIX "D", N70 (1½″)
6. PROPOSED POLYMERIZED LEVELING BINDER (MACHINE METHOD), IL-4.75, N50 (1″)
7. PROPOSED CONCRETE CURB AND GUTTER, TYPE B-6.12

• LOCATIONS TO BE DETERMINED BY THE ENGINEER

FILE NAME = c:\projects\d189498\design_aa.dgn	USER NAME = auky	DESIGNED -	REVISED -	STATE OF ILLINOIS DEPARTMENT OF TRANSPORTATION	CUMBERLAND AVE. EXISTING AND PROPOSED TYPICAL SECTIONS	F.A.U. RTE.	SECTION	COUNTY	TOTAL SHEETS	SHEET NO.
		DRAWN -	REVISED -			2746	3215A-RS	COOK	27	8
	PLOT SCALE = 100:8.461 ':' / IN.	CHECKED -	REVISED -					CONTRACT NO. 60559		
	PLOT DATE = 6/13/2008	DATE -	REVISED -		SCALE: SHEET NO. OF SHEETS STA. TO STA.	FED. ROAD DIST. NO. 1	ILLINOIS	FED. AID PROJECT		