F.A.I. RTE.	SECTION	COUNTY	TOTAL SHEETS	SHEET NO.
55	*	WILL	608	418
STA.		TO STA.		
FED. ROAD DIST. NO. 1	ILLINOIS	FED. AID PROJECT		

* (26, 26HB-1&114) R-2 CONTRACT NO. 60363

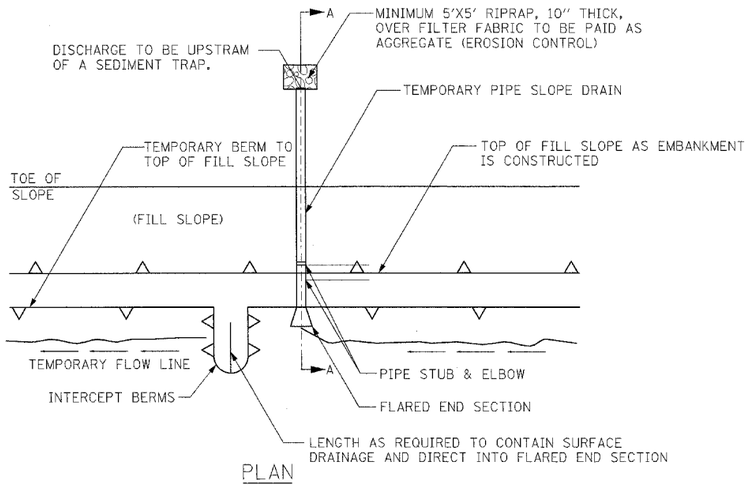

PLAN

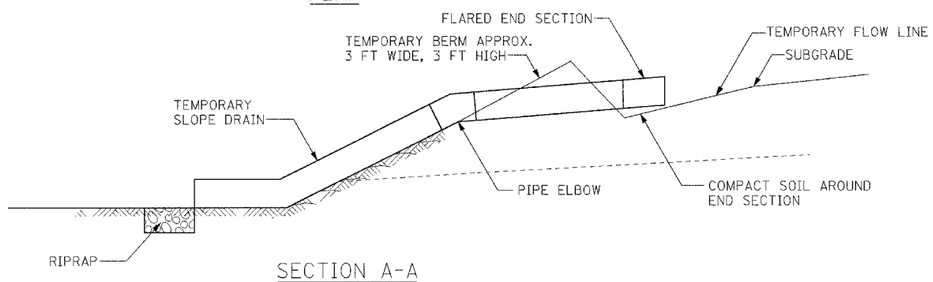

SECTION A-A

FOR ALL SLOPES

TEMPORARY SLOPE DRAIN SHALL BE USED AT THE TOP OF FILL SLOPE AS EMBANKMENT IS CONSTRUCTED TO PREVENT EXCESSIVE EROSION UNTIL SHOULDERS ARE CONSTRUCTED AND THE SLOPES ARE SEEDED AND MULCHED.

EROSION CONTROL
TEMPORARY PIPE SLOPE DRAINS

GENERAL NOTES:

1. ALL DIMENSIONS AND LOCATIONS NOT INDICATED. FOR ITEMS APPEARING ON THIS SHEET OR ON THE PLANS SHALL BE DIRECTED BY THE ENGINEER.
2. THE CONTRACTOR SHALL PLACE GEOTEXTILE AROUND THE METAL END SECTION TO PREVENT BLOW-OUTS.
3. ALL TEMPORARY SLOPE DRAINS WILL DISCHARGE INTO THE BACK OF SEDIMENT TRAPS. INTO SEDIMENT BASINS OR DITCHES DISCHARGING INTO TRAPS OR BASINS.
4. PIPE WILL BE SECURED THROUGH USE OF HOLD DOWN STAKES WITH A MAXIMUM SPACING OF 10 FEET.
5. TEMPORARY PIPE SLOPE DRAINS WILL BE SPACED A MAX. OF EVERY 500 FEET ALONG THE FILL WITH A STANDARD DIA. OF 18 IN. THIS PIPE SIZE IS ADEQUATE TO HANDLE 1.5 HECTARES OF CONTRIBUTING AREA. SPACING OR SIZE TO BE ADJUSTED IF CONTRIBUTING AREA IS LARGER THAN 1.5 HECTARES. AT LEAST TWO TEMPORARY PIPE SLOPE DRAINS WILL BE PLACED IN EVERY SAG.
6. STAPLES SHALL BE USED TO ANCHOR THE FILTER FABRIC AND SHALL BE UNIFORMLY SPACED AT APPROXIMATELY 12 IN.
7. TEMPORARY BERM PLACEMENT & REMOVAL, PIPE ELBOWS AND FLARED END SECTIONS SHALL NOT BE PAID SEPARATELY, BUT SHALL BE INCLUDED IN THE CONTRACT UNIT PRICE OF "TEMPORARY PIPE SLOPE DRAINS"

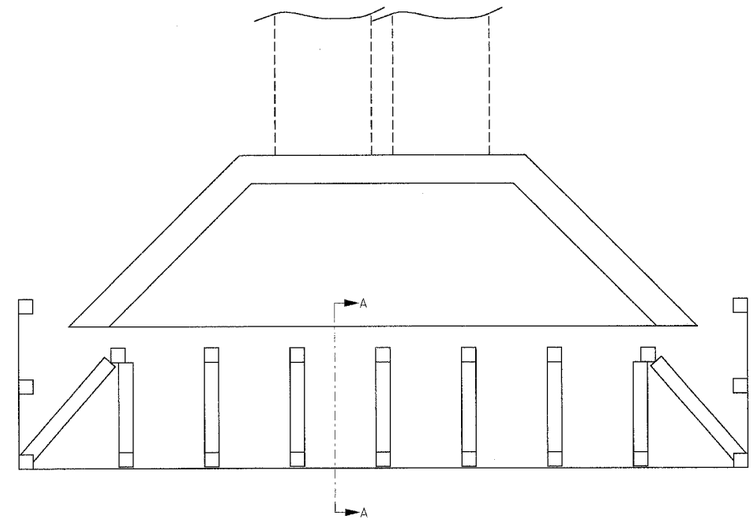

PLAN

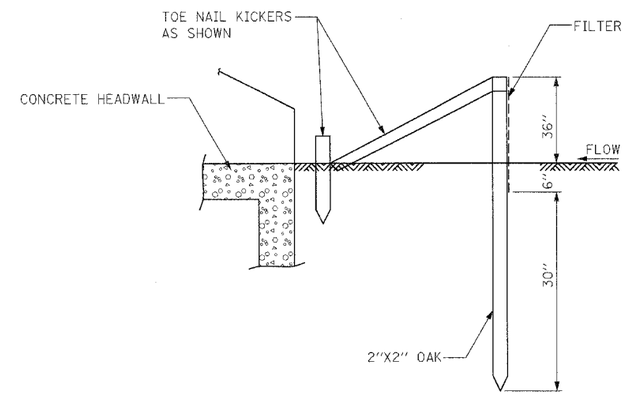

SECTION A-A

GENERAL NOTES:

1. REINFORCED INLET PROTECTION SHALL BE PAID FOR AT THE CONTRACT UNIT PRICE "EACH" FOR INLET PROTECTION, SPECIAL. THIS PRICE SHALL INCLUDE ALL THE MATERIAL NECESSARY TO COMPLETE THE WORK AS SHOWN.

REINFORCED INLET PROTECTION
(INLET PROTECTION, SPECIAL)

REVISIONS	
NAME	DATE

ILLINOIS DEPARTMENT OF TRANSPORTATION
FAI 55 AT FAP 338 ILLINOIS ROUTE 59
SECTION: (26, 26HB-1&114) R-2

EROSION CONTROL DETAILS TEMP PIPE SLOPE DRAINS AND REINFORCED INLET PROTECTION

SCALE: DRAWN BY: MRK

DATE: 03/14/08 CHECKED BY: TKL

TENG

TENG & ASSOCIATES, INC.
ENGINEERS/ARCHITECTS/PLANNERS
303 N. MICHIGAN AVE. CHICAGO, IL 60601
TELEPHONE: 312/616-0005

BONDHLUD
T:\DOCUMENT\93279D\DIV4\DGN\ERCOVA6.DGN
\\TTBGORN\DGN
7-24-2008, 8:46:40