F.A.I. RTE.	SECTION	COUNTY	TOTAL SHEETS	SHEET NO.
55	*	WILL	608	93
STA.		TO STA.		
FED. ROAD DIST. NO. 1	ILLINOIS	FED. AID PROJECT		

* (26, 26HB-1&114) R-2 CONTRACT NO. 60363

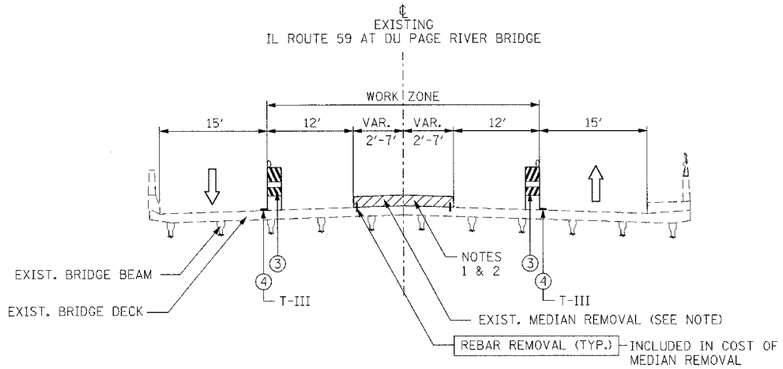

PRE-STAGE A
TYPICAL SECTION J-J
IL 59
STA. 7522+00 TO STA. 7526+80

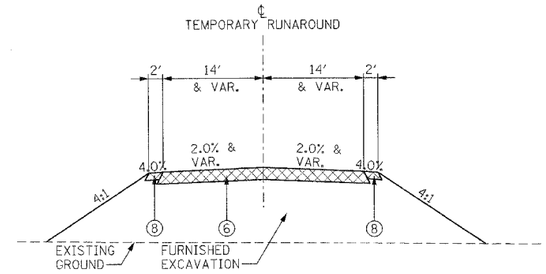

PRE-STAGE A
TYPICAL SECTION E-E
TEMPORARY RUNAROUND
STA. 1003+62.63 TO STA. 1009+27.05
STA. 1012+60.00 TO STA. 1014+81.61**

** TO BE CONSTRUCTED IMMEDIATLY PRIOR TO STAGE 3A.

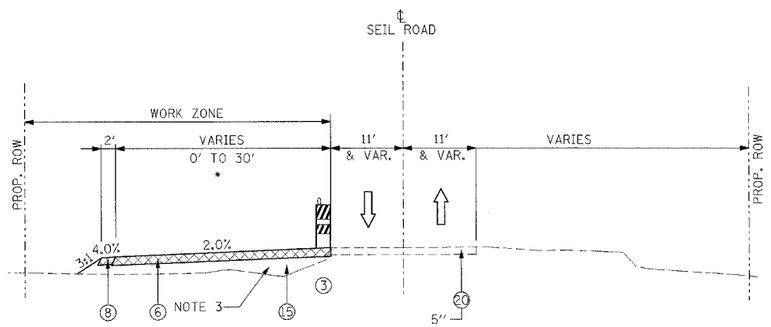

PRE-STAGE A
TYPICAL SECTION H-H
SEIL ROAD
STA. 4007+40.00 TO STA. 4013+65.66

* 0' TO 28': STA. 4007+40 TO STA. 4010+20
28': STA. 4010+20 TO STA. 4012+91.75
28' TO 30': STA. 4012+91.75 TO STA. 4013+65.66

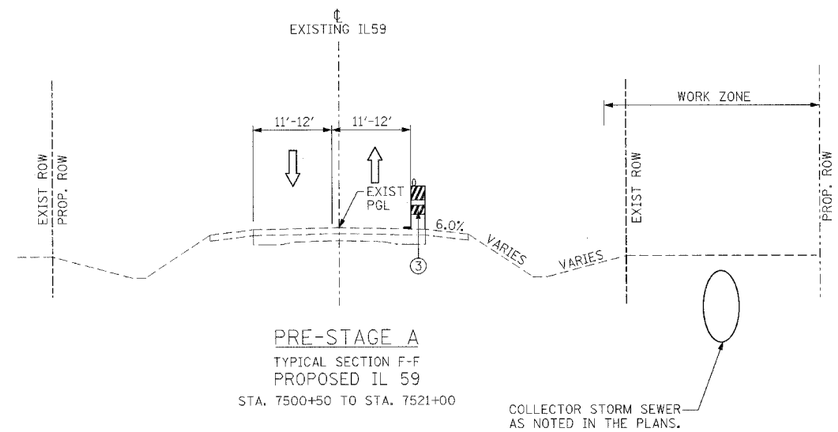

PRE-STAGE A
TYPICAL SECTION F-F
PROPOSED IL 59
STA. 7500+50 TO STA. 7521+00

NOTES:

1. THE CONTRACTOR SHALL REMOVE THE RAISED CONCRETE MEDIAN CAREFULLY SO AS NOT TO CAUSE DAMAGE TO THE IL 59 OVER DUPAGE RIVER BRIDGE DECK OR ROAD SURFACE BELOW IT. THE PORTION ON ROADWAY SHALL BE PAID FOR AS MEDIAN REMOVAL PARTIAL DEPTH, AND THE PORTION ON STRUCTURE SHALL BE PAID FOR AS CONCRETE REMOVAL.
2. CONES AT 25' CENTERS CAN BE SUBSTITUTED FOR TYPE II BARRICADES IF THE MEDIAN REMOVAL CAN BE COMPLETED DURING A DAYTIME CLOSURE.
3. THE CONTRACTOR SHALL PLACE THE GRANULAR EMBANKMENT IN COMPACTED LIFTS SO AS TO MAINTAIN ACCESS TO LOCAL PROPERTIES.
4. CONTRACTOR SHALL MILL AND RESURFACE RUMBLESTRIP LOCATIONS ALONG OUTSIDE NB AND SB I-55 SHOULDERS PRIOR TO MEDIAN RECONSTRUCTION. SEE MOT NOTES FOR DETAILS.

LEGEND:

1. EXIST. WOVEN WIRE FENCE
2. CHAIN LINK FENCE, 4'
3. BARRICADES, TYPE II OR DRUMS WITH STEADY BURN LIGHT
4. TEMPORARY PAVEMENT MARKINGS (OR TYPE III TAPE IF INDICATED)
5. VERTICAL PANELS WITH STEADY BURN LIGHT
6. TEMPORARY PAVEMENT, 10"
6A. TEMPORARY PAVEMENT, 4"
7. N/A
8. AGGREGATE SHOULDERS, TYPE B 6"
9. TEMPORARY SEEDING
10. TEMPORARY PIPE CULVERT
11. BITUMINOUS SURFACE REMOVAL
12. PROP. HOT-MIX ASPHALT SURFACE COURSE, MIX "D", N70 1½"
13. PROP. STEEL PLATE BEAM GUARDRAIL
14. N/A
15. PROP. GRANULAR EMBANKMENT
16. AGGREGATE SUBGRADE 12"
17. N/A
18. PROPOSED PAVEMENT MARKINGS
19. PAVED SHOULDER REMOVAL
20. EXISTING PAVEMENT
21. TEMPORARY PAVEMENT (PREVIOUS STAGE)
22. TEMPORARY SHOULDER (PREVIOUS STAGE)
23. AGGREGATE BASE COURSE, TYPE B, 10"
24. TEMPORARY CONCRETE BARRIER WALL
25. TOPSOIL EXCAVATION

⇨ TRAFFIC FLOW
(E) DENOTES EXISTING ALIGNMENT STATIONING
(P) DENOTES PROPOSED ALIGNMENT STATIONING

MOT06

REVISIONS	
NAME	DATE

ILLINOIS DEPARTMENT OF TRANSPORTATION
FAI 55 AT FAP 338 ILLINOIS ROUTE 59
SECTION: (26, 26HB-1&114) R-2

MAINTENANCE OF TRAFFIC
TYPICAL SECTIONS
PRE-STAGE (2 OF 2)

SCALE: N.T.S. DRAWN BY: JB
DATE: 03/14/08 CHECKED BY: ACL

TENG
TENG & ASSOCIATES, INC.
ENGINEERS/ARCHITECTS/PLANNERS
205 N. MICHIGAN AVE. CHICAGO, IL 60601
TELEPHONE: 312/616-0600

..\TTR00RNA.DGN, ..\MOT00SC.DGN, ..\MOT00S65.DGN, ..\TSC00RW0.DGN, ..\MOT00SP4.DGN
3-14-2008, 9:37:50 T:\DOCUMENT\B32750\CIVIL\DGN\MOT00SNP.DGN
1 2 3 4 5 6 7 8 9 10 11 12 13 14 15 16 17 18 19 20 21 22 23 24 25 26 27 28 29 30 31 32 33 34 35 36 37 38 39 40 41 42 43 44 45 46 47 48 49 50 51 52 53 54 55 56 57 58 59 60 61 62 63
BONDHLUO