F.A. RTE.	SECTION	COUNTY	TOTAL SHEETS	SHEET NO.
646	125W-1,RS-2	PEORIA	256	167
STA.		TO STA.		
FED. ROAD DIST. NO.	ILLINOIS	FED. AID PROJECT		

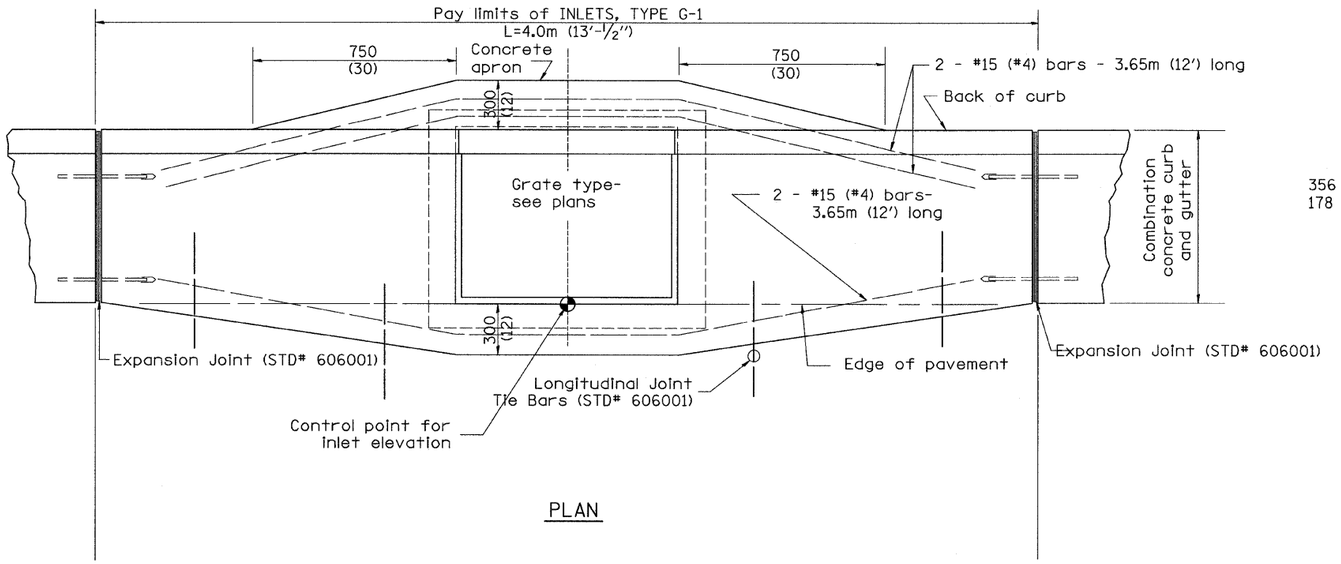

PLAN

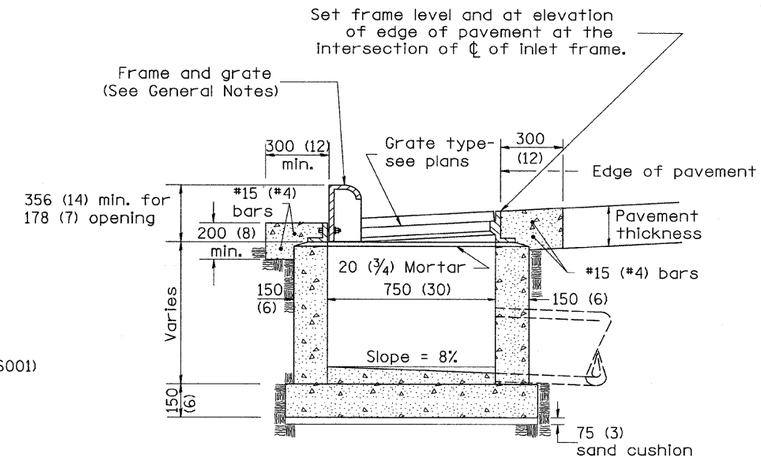

ELEVATION
SIDE

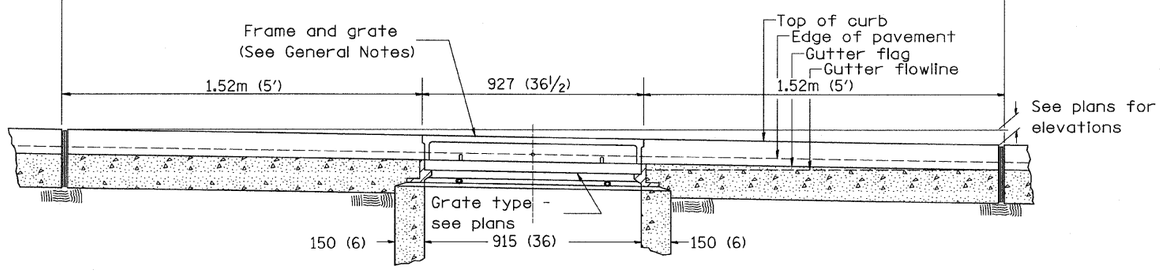

ELEVATION
FRONT

GENERAL NOTES

1. Inlet construction shall be in accordance with Section 602 of the Standard Specifications.
2. Combination Concrete Curb & Gutter shall be constructed in accordance with Section 606 of the Standard Specifications.
3. See District CADD Standard 604001-D4 for frame and grates.

All dimensions are in millimeters (inches) unless otherwise noted.

DATE	REVISIONS	BY
1-1-97	RENUM. B-4.01, NEW REVISION BOX	T.P.
10-99	REVISION TO GENERAL NOTES	J.A.
2-00	REVISION TO DESIGNER NOTES	J.A.

ILLINOIS DEPARTMENT OF TRANSPORTATION

DISTRICT CADD STANDARD

INLETS, TYPE G-1

CADD STD NO. 602001-D4

SCALE NOT TO SCALE
DATE $$DATE$$

DRAWN BY CADD
CHECKED BY

$$DATE$$

DGN-ONLY

602001-D4