BENCHMARK: BM#1 - Nail & BC in Power Pole, 35' Lt., Sta. 102+80, Elev. 100.00 (Assumed)

EXISTING STRUCTURE: Station 105+15 - Single Span Precast Concrete Channel Beam Bridge with concrete curb on timber pilings and cap. Structure closed to traffic.

No Salvage

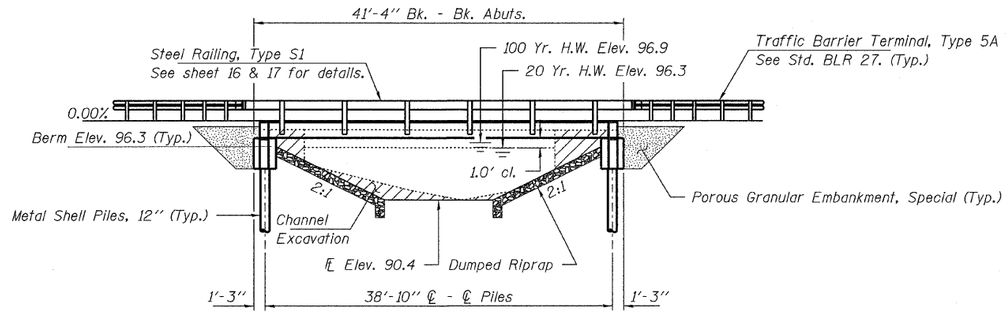

ELEVATION

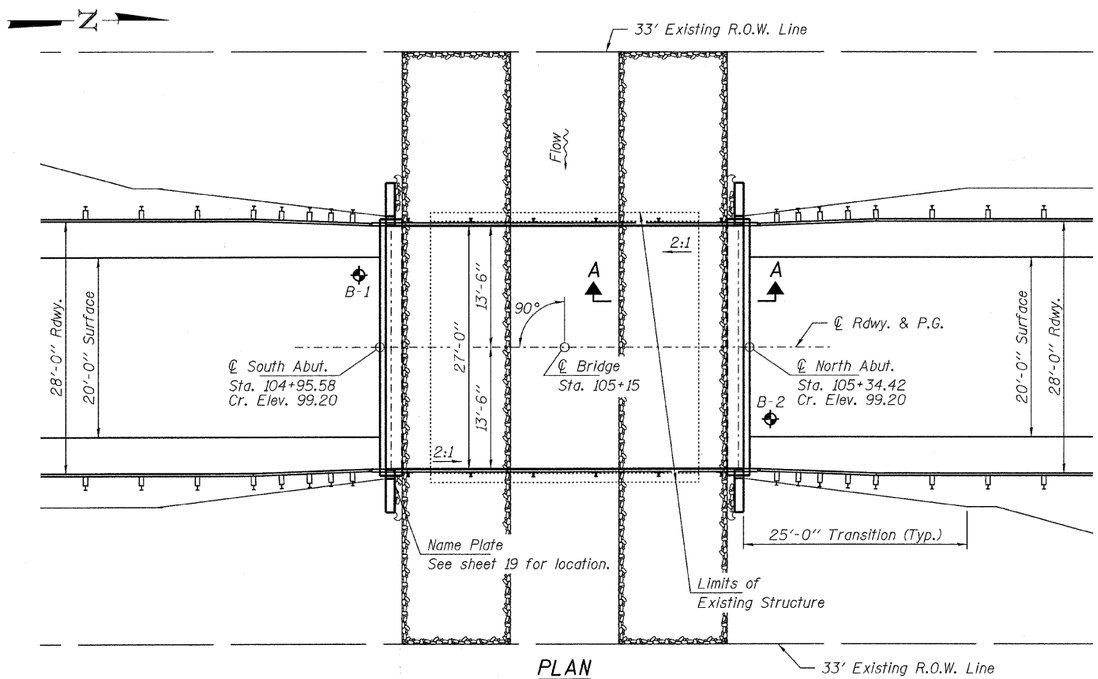

PLAN

GENERAL NOTES

Layout of riprap may be varied in the field to suit ground conditions as directed by the Engineer.

The Contractor shall drive test piles to 110% of the nominal required bearing specified in production locations at South Abutment or approved by the Engineer before ordering the remainder of piles.

Reinforcement bars shall conform to the requirements of ASTM A 706 Gr 60 (IL Modified). See Special Provisions.

Excavation required to construct the Abutments shall be included in the cost of Concrete Structures. No additional compensation will be allowed for Structure Excavation.

All proposed construction activities shall be in accordance with Nationwide Permit number 14 of the Department of the Army authorized under Section 404 of the Clean Water Act. The IEPA has issued Section 401 Water Quality Certification for this activity. See Special Provisions for conditions.

The abutments shall be backfilled full width with porous granular embankment from the bottom of the abutment cap to the subgrade elevation as directed by the Engineer.

See Sheets 20 & 21 for Borings.

BUILT 200_ BY
FORD COUNTY
SEC. 09-00106-00-BR
F.A.S. 340 / C.H. 26
STR. NO. 027-3438
LOADING HL-93

NAME PLATE

See Std. 515001

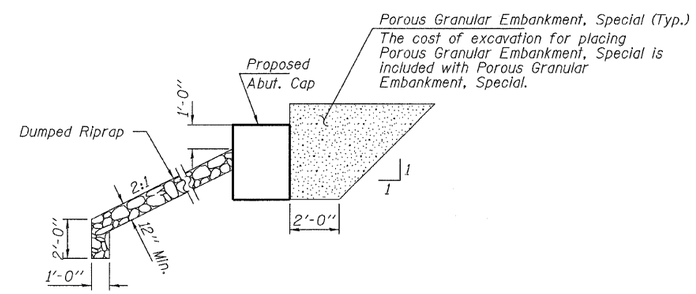

SECTION A-A

Note: See Special Provisions for Dumped Riprap and Porous Granular Embankment, Special.

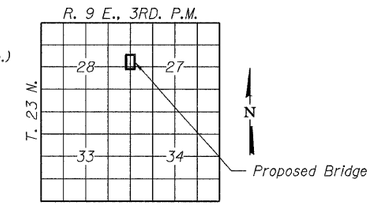

LOCATION SKETCH

TOTAL BILL OF MATERIAL

ITEM	UNIT	SUPER	SUB	TOTAL
Channel Excavation	Cu. Yd.			70
Porous Granular Embankment, Special	Ton			90
Dumped Riprap	Ton			130
Hot-Mix Ashpalt Surface Course, Mix "C", N50	Ton	12		12
Removal of Existing Structures	Each			1
Concrete Structures	Cu. Yd.		21.4	21.4
Precast Prestressed Concrete Deck Beams (17" Depth)	Sq. Ft.	1,080		1,080
Reinforcement Bars	Pound		2,500	2,500
Steel Railing, Type S1	Foot	86		86
Furnishing Metal Shell Piles 12"x 0.250"	Foot		260	260
Driving Piles	Foot		260	260
Test Pile Metal Shells	Each		1	1
Name Plates	Each		1	1
Waterproofing Membrane System	Sq. Yd.	120		120
Portland Cement Mortar Fairing Course	Foot	80		80

DESIGN STRESSES

FIELD UNITS

f'c = 3,500 psi
fy = 60,000 psi (Reinf.)

PRECAST PRESTRESSED UNITS

f'c = 6,000 psi
f'ci = 5,000 psi
fpu = 270,000 psi (½"ϕ low lax. strands)
fpbt = 201,960 psi (½"ϕ low lax. strands)
fy = 60,000 psi (Reinf.)

LOADING HL-93

Design Specifications: 2007 AASHTO LRFD with all applicable interims.
50#/Sq. Ft. included in dead load for future wearing surface.

SEISMIC DATA

Seismic Performance Zone (SPZ) = 1
Design Spectral Acceleration at 1.0 sec. (S_{D1}) = 0.123g
Design Spectral Acceleration at 0.2 sec. (S_{DS}) = 0.204g
Soil Site Class = D

WATERWAY DATA

Existing Low Grade Elevation = 98.3 ft. at Sta. 105+50
Proposed Low Grade Elevation = 98.6 ft. at Sta. 103+50
Drainage Area = 0.8 sq. mi.

Flood	Frequency Year	Discharge (cfs)	Waterway Opening (sq. ft.) Existing	Waterway Opening (sq. ft.) Proposed	Natural H.W.E	Head (ft.) Existing	Head (ft.) Proposed	Headwater Elev. Existing	Headwater Elev. Proposed
	10	326	110	120	95.8	0.0	0.0	95.8	95.8
DESIGN	15	417	120	140	96.3	0.0	0.0	96.3	96.3
BASE	100	649	120	160	96.9	0.7	0.5	97.6	97.4
MAX CALC	500	898	120	170	97.4	1.1	1.1	98.5	98.5

I certify that to the best of my knowledge, information and belief, this bridge design is structurally adequate for the design loading shown on the plans. The design is an economical one for the style of structure and complies with requirements of the current "AASHTO LRFD Specifications."

Michael G. Berry 5/6/09
ILLINOIS STRUCTURAL NO. 081-4622

LICENSED STRUCTURAL ENGINEER MICHAEL G. BERRY 081-4622 SPRINGFIELD, IL STATE OF ILLINOIS

Expires 11-30-2010

GENERAL PLAN AND ELEVATION
STRUCTURE NO. 027-3438

DESIGNED -	A.S.L.
CHECKED -	M.G.B.
DRAWN -	D.T.M.
CHECKED -	D.A.B.

HAMPTON, LENZINI & RENWICK, INC.
CIVIL & STRUCTURAL ENGINEERS
LAND SURVEYORS
HLR
3085 STEVENSON DRIVE, SUITE 201
SPRINGFIELD, ILLINOIS 62703
(217) 546-3400

PROJECT NUMBER: 07.0432.130 DATE: 03/31/09

F.A.S.	SECTION	COUNTY	TOTAL SHEETS	SHEET NO.
340	09-00106-00-BR	FORD	32	14
		CONTRACT NO. 87411		

FED. ROAD DIST. NO. | ILLINOIS | FED. AID PROJECT