F.A.I. RTE.	SECTION	COUNTY	TOTAL SHEETS	SHEET NO.
94	1818 I-6	COOK	42	24
STA. 2327+79.39		TO STA. 2338+67.22		
FED. ROAD DIST. NO.	ILLINOIS	FED. AID PROJECT		

62974

NOTE:
THIS OPTION SHALL BE USED WHEN THE CARRIAGE WALK AREA MEASURES LESS THAN 12" IN WIDTH

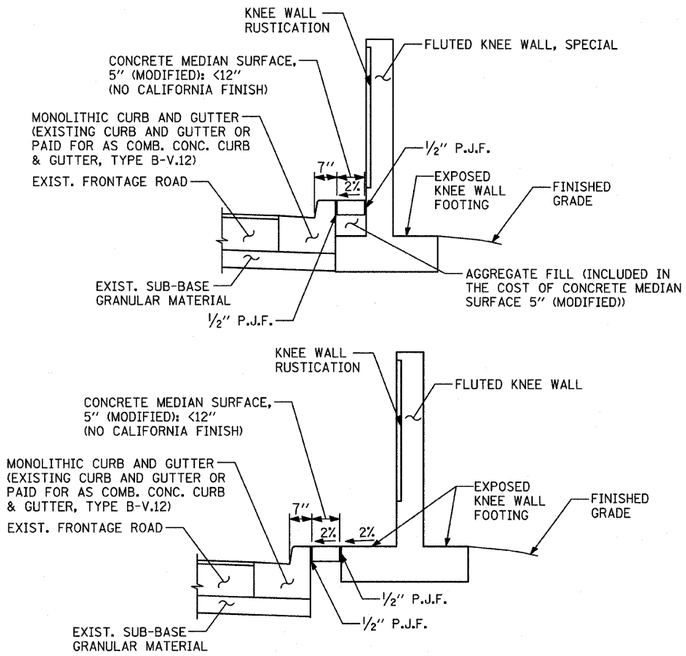

CONCRETE MEDIAN SURFACE, 5" (MODIFIED) "A"
AREA <12" WIDE

NOTE:
THIS OPTION SHALL BE USED WHEN THE CARRIAGE WALK AREA MEASURES 12" TO 18" IN WIDTH

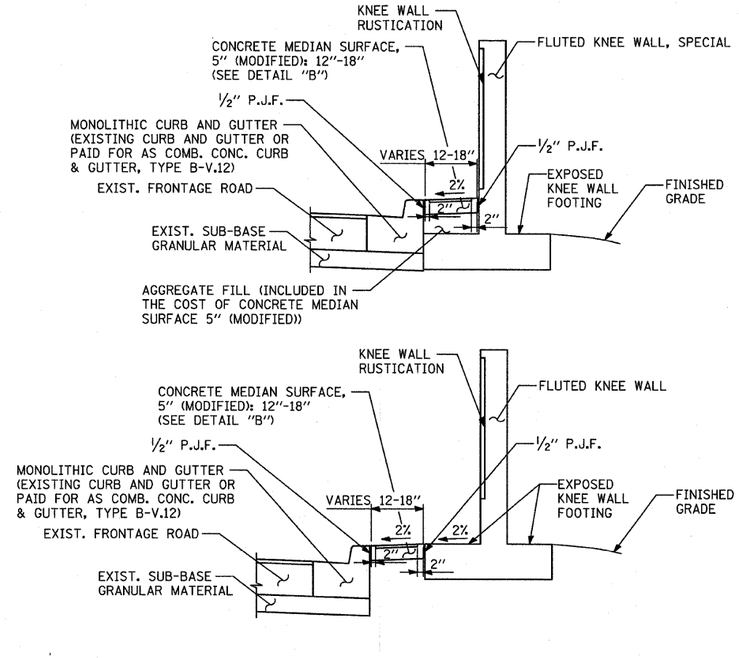

CONCRETE MEDIAN SURFACE, 5" (MODIFIED) "B"
AREA 12"-18" WIDE

NOTE:
THIS OPTION SHALL BE USED WHEN THE CARRIAGE WALK AREA MEASURES 18" OR GREATER IN WIDTH

VARIES PANEL:
- IF THE WIDTH IS >=4" THEN APPLY BROOM FINISH FLUSH TO THE KNEE WALL WITH 4" CALIFORNIA JOINT
- IF THE WIDTH IS <4" THEN SURFACE TO BE HARD TROWELLED (SEE DETAIL A)

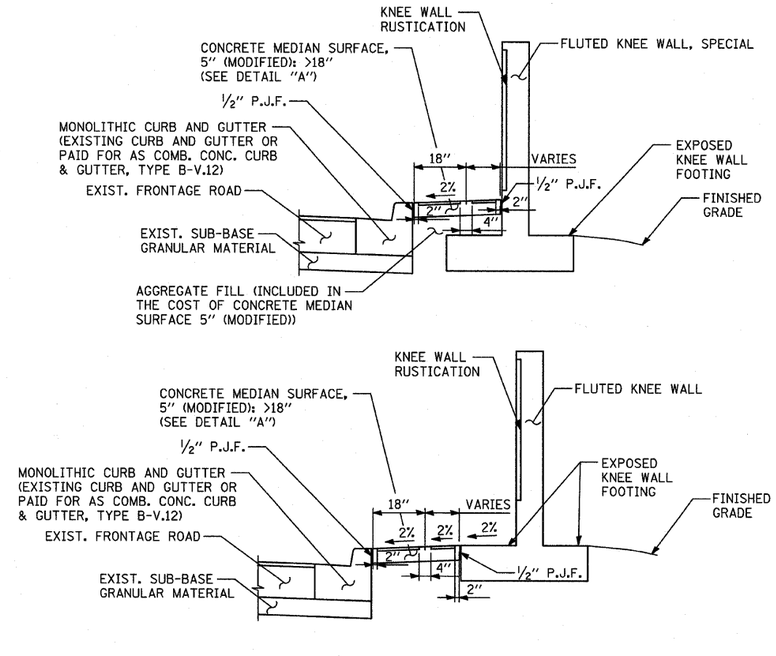

CONCRETE MEDIAN SURFACE, 5" (MODIFIED) "C"
AREA >18" WIDE

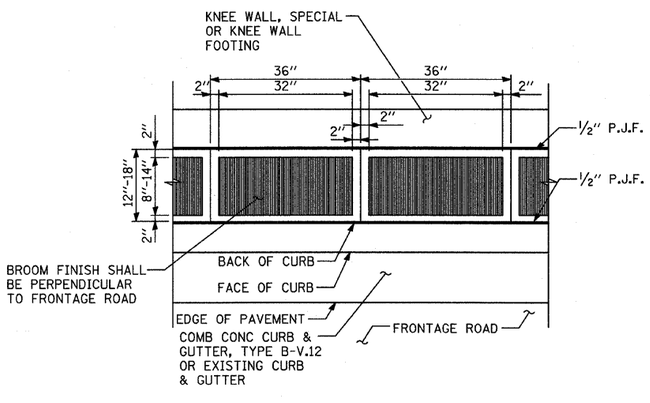

DETAIL "B": COORDINATE WITH CONC. MED. SURFACE, 5" (MODIFIED) "B"
CALIFORNIA FINISH

VARIES PANEL:
- IF THE WIDTH IS >=4" THEN APPLY BROOM FINISH FLUSH TO THE KNEE WALL FACE WITH 4" CALIFORNIA JOINT
- IF THE WIDTH IS <4" THEN SURFACE TO BE HARD TROWELLED

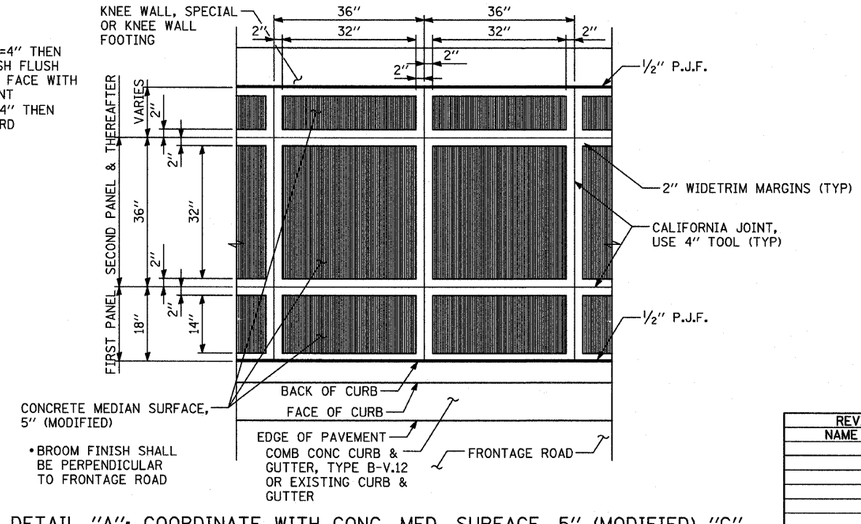

- BROOM FINISH SHALL BE PERPENDICULAR TO FRONTAGE ROAD

DETAIL "A": COORDINATE WITH CONC. MED. SURFACE, 5" (MODIFIED) "C"
CALIFORNIA FINISH

NOTE:
NOT ALL ITEMS SHOWN ON THIS SHEET ARE PROPOSED. SEE PLANS FOR PROPOSED ITEMS.

SHEET OF

REVISIONS	
NAME	DATE

ILLINOIS DEPARTMENT OF TRANSPORTATION
F.A.I. 94 (DAN RYAN EXPRESSWAY)

CONCRETE MEDIAN SURFACE, 5" (MODIFIED) WITH CALIFORNIA FINISH DETAIL

S.N.
SCALE: NONE
DATE: FEBRUARY 13, 2009
DESIGNED BY:
DRAWN BY: JDF
CHECKED BY: JPM

TY·LIN INTERNATIONAL

p:\02373\road\225\m225ast03.3.dgn 3/19/2009 1:29:01 PM