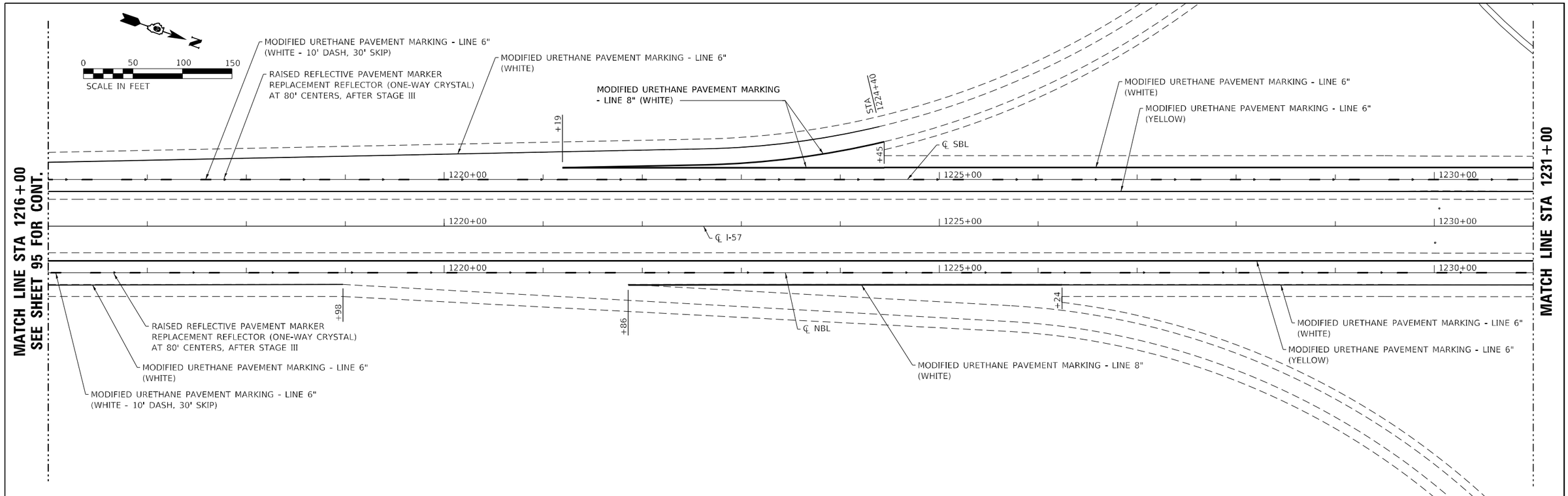

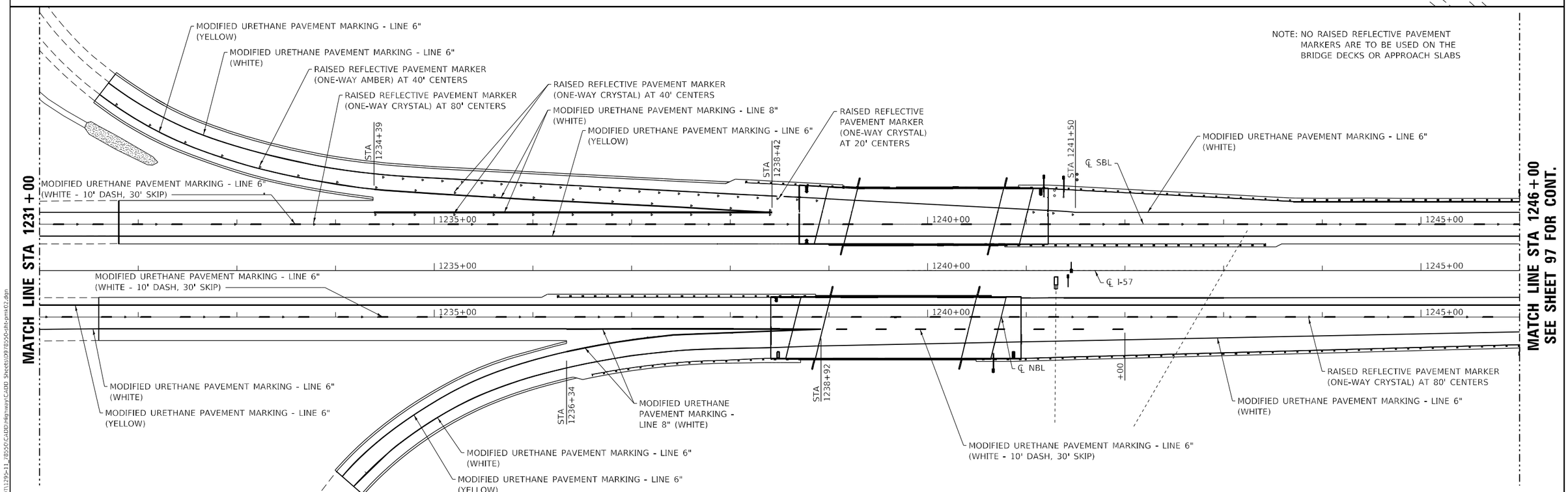

MODEL: PLOT
FILE NAME: Y:\DOT\1299-11_78550\CADD\Highway\CADD Sheets\0978550-sht-pmk02.dgn

ESCA CONSULTANTS, INC. ENVIRONMENTAL ENGINEERS

USER NAME = skm	DESIGNED - JMK	REVISED -	
ESCA PROJECT NO. 1295.11	DRAWN - JMK	REVISED -	
PLOT SCALE = 0.1667 ' / in.	CHECKED - SKM/ELH	REVISED -	
PLOT DATE = 12/23/2020	DATE - 12/20	REVISED -	

STATE OF ILLINOIS
DEPARTMENT OF TRANSPORTATION

PAVEMENT MARKING PLANS

SCALE: 1"=50' | SHEET NO. 2 OF 3 SHEETS | STA. 1216+00 TO STA. 1246+00

F.A.I. RTE.	SECTION	COUNTY	TOTAL SHEETS	SHEET NO.
57	(41-4)B-1;(41-4)B-2	JEFFERSON	257	101
		CONTRACT NO. 78550		
FED. ROAD DIST. NO.	ILLINOIS	FED. AID PROJECT		

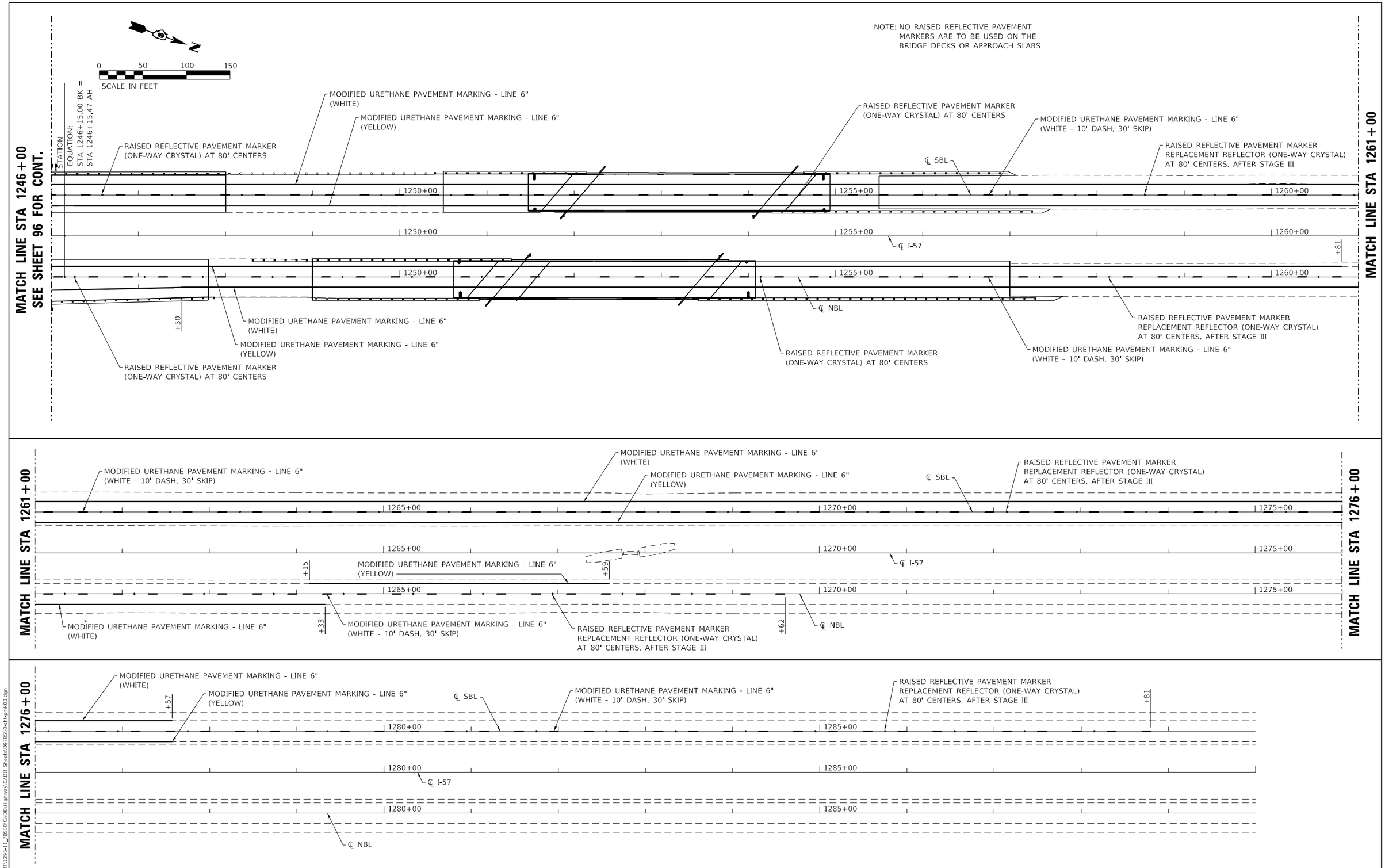

MODEL: PLOT
FILE NAME: Y:\IDOT\1295-11_78550\CADD\Highway\CADD Sheets\0978550-sht-pmk03.dgn

ESCA CONSULTANTS, INC.

USER NAME = skm	DESIGNED - JMK	REVISED -	
ESCA PROJECT NO. 1295.11	DRAWN - JMK	REVISED -	
PLOT SCALE = 0.1667 ' / in.	CHECKED - SKM/ELH	REVISED -	
PLOT DATE = 12/23/2020	DATE - 12/20	REVISED -	

STATE OF ILLINOIS
DEPARTMENT OF TRANSPORTATION

PAVEMENT MARKING PLANS

SCALE: 1"=50' | SHEET NO. 3 OF 3 SHEETS | STA. 1246+00 TO STA. 1290+00

F.A.I. RTE.	SECTION	COUNTY	TOTAL SHEETS	SHEET NO.
57	(41-4)B-1;(41-4)B-2	JEFFERSON	257	102
		CONTRACT NO. 78550		

FED. ROAD DIST. NO. | ILLINOIS | FED. AID PROJECT

BENCHMARK: BM 629 – Cut square on N.E. wingwall of SN 041-0014 overhead bridge for NBL I-57, exit 103 Dix. Sta. 1240+43.05, RT 80.49', Elev. 577.32

EXISTING STRUCTURES:
SN 041-0014 (NB) and SN 041-0015 (SB) were originally constructed in 1968 as F.A.I. 57, Section 41-4HB-2. The four-span structures consist of concrete decks supported by rolled steel beams. The beams are supported by concrete column piers and stub abutments. All piers and abutments are supported by steel piles. Back to back abutments is 153'-11" NB and SB Lanes. The NB superstructure width varies 52'-0½" to 55'-0⅞" out-to-out, and the SB superstructure width varies 41'-6½" to 49'-4⅝" out-to-out. The skew is 14°-00'-30". Interstate traffic will be maintained utilizing crossovers. The northbound entrance ramp and southbound exit ramp will be closed as necessary and traffic will be detoured.

No salvage. Removal of existing slope wall is included in Removal of Existing Structures. Removal limit line is F.A.I. 57 ceterline for each structure.

Proposed piles at abutments and piers are to be located to clear existing piles.

Up to 1/4" may be ground off the bridge deck, the bridge approach slabs, and pavement connectors.

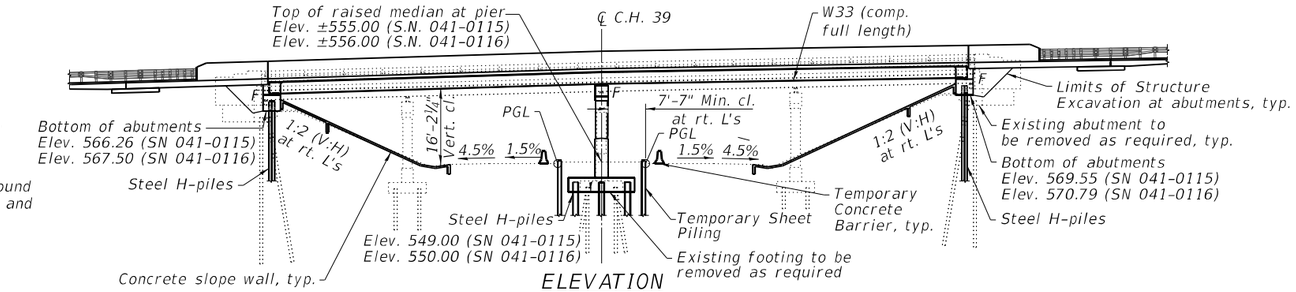

ELEVATION
(Showing SN 041-0116, SN 041-0115 similar)

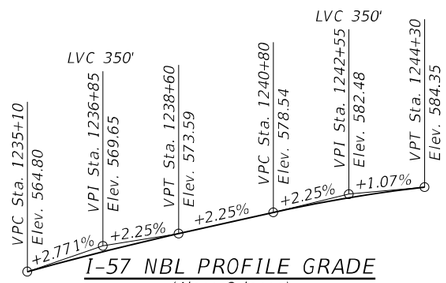

I-57 NBL PROFILE GRADE
(Along ℄ lanes)
(PG shows the final elevations after grinding)

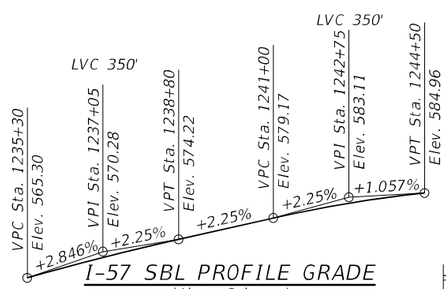

I-57 SBL PROFILE GRADE
(Along ℄ lanes)
(PG shows the final elevations after grinding)

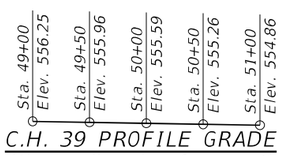

C.H. 39 PROFILE GRADE
(Along median edge of pavement)

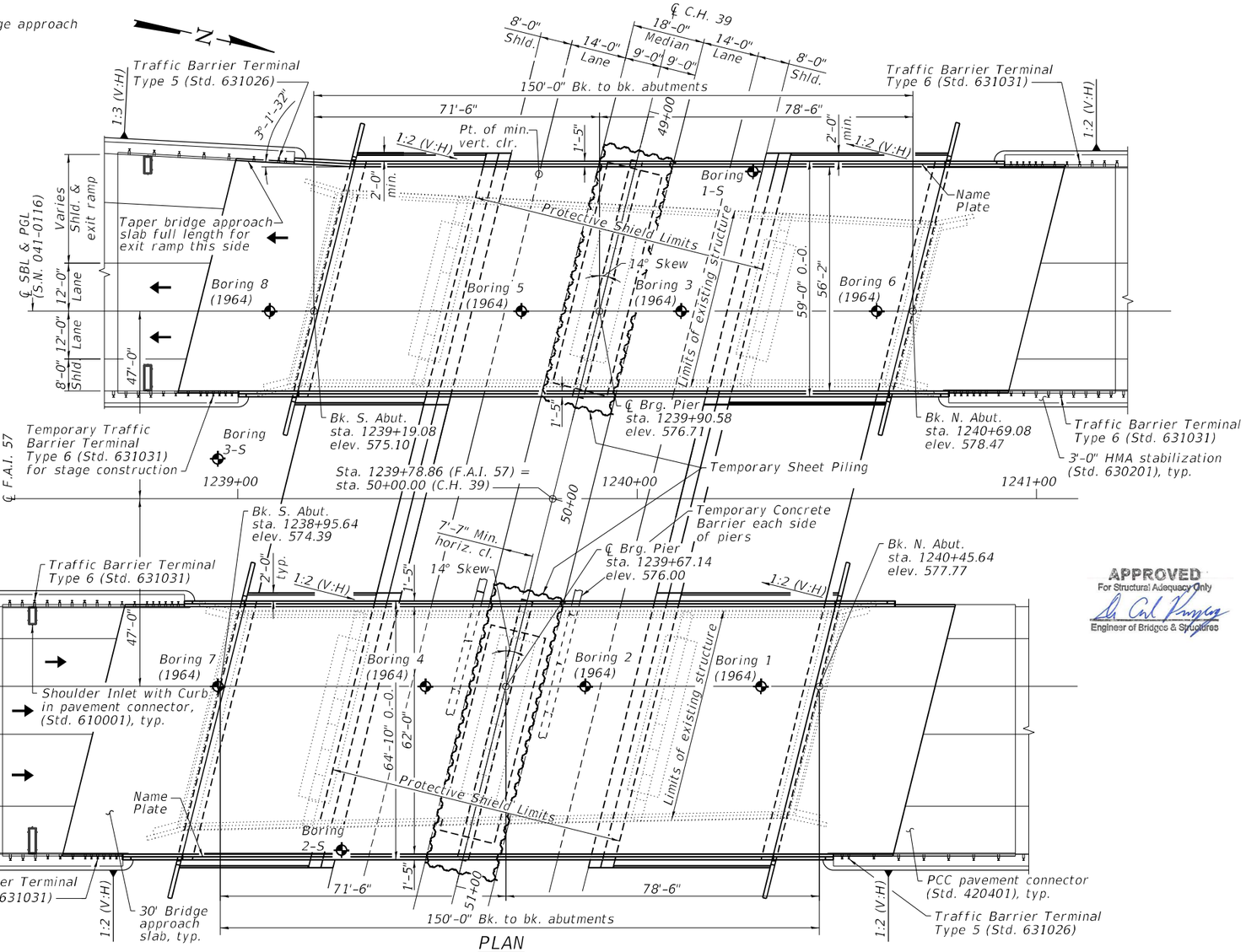

PLAN

SEISMIC DATA

Seismic Performance Zone (SPZ) = 2
Design Spectral Acceleration at 1.0 sec. (S_{D1}) = 0.202g
Design Spectral Acceleration at 0.2 sec. (S_{DS}) = 0.564g
Site Soil Class = C

LOADING HL-93

Allow 50 psf for future wearing surface

DESIGN SPECIFICATIONS

2017 AASHTO LRFD
Bridge Design Specifications 8th Edition

DESIGN STRESSES FIELD UNITS

f'c = 3,500 psi (substructure)
f'c = 4,000 psi (superstructure)
fy = 50,000 psi (AASHTO M270 Grade 50)
fy = 36,000 psi (AASHTO M270 Grade 36)
fy = 60,000 psi (reinforcement)

LICENSED STRUCTURAL ENGINEER
AHMAD TALAL S. IDRISS
081-005753
SPRINGFIELD ILLINOIS
STATE OF ILLINOIS

Ahmad T. Idriss, P.E., S.E.
Illinois Licensed Structural Engineer
License Number: 081-005753
Expiration Date: November 30, 2022

APPROVED
For Structural Adequacy Only
Engineer of Bridges & Structures

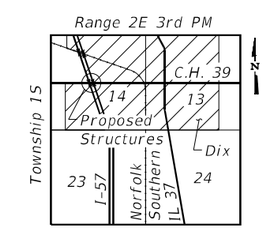

LOCATION SKETCH

GENERAL PLAN & ELEVATION
I-57 OVER F.A.S. 819 (C.H. 39)
F.A.I. RTE. 57 – SECTION (41-4)B-2
JEFFERSON COUNTY
STATION 1239+78.86
STRUCTURE NO. 041-0115 (NB)
STRUCTURE NO. 041-0116 (SB)

MODEL: Default
FILE NAME: L:\IDOT\190610\WQ_6\Draw\Structure\001-General P&E.dgn

CMT
License No. 184-000613
© Copyright CMT, Inc.

USER NAME = Derek Cochran	DESIGNED - AI	REVISED -	
	CHECKED -	REVISED -	
PLOT SCALE = N/A	DRAWN - GLD	REVISED -	
PLOT DATE = 3/5/2021 (8:04:42 AM)	CHECKED -	REVISED -	

STATE OF ILLINOIS
DEPARTMENT OF TRANSPORTATION

GENERAL PLAN & ELEVATION
STRUCTURE NO. 041-0115 (N.B.) & 041-0116 (S.B.)
SHEET 1 OF 37 SHEETS

F.A.I. RTE.	SECTION	COUNTY	TOTAL SHEETS	SHEET NO.
57	(41-4)B-2	JEFFERSON	257	103
		CONTRACT NO. 78550		
		ILLINOIS	FED. AID PROJECT	

INDEX OF SHEETS

STATION 1239+70.64
BUILT BY
STATE OF ILLINOIS
LOADING HL-93
STRUCTURE NO. 041-0115

NAME PLATE
See Std. 515001

STATION 1239+94.08
BUILT BY
STATE OF ILLINOIS
LOADING HL-93
STRUCTURE NO. 041-0116

NAME PLATE
See Std. 515001

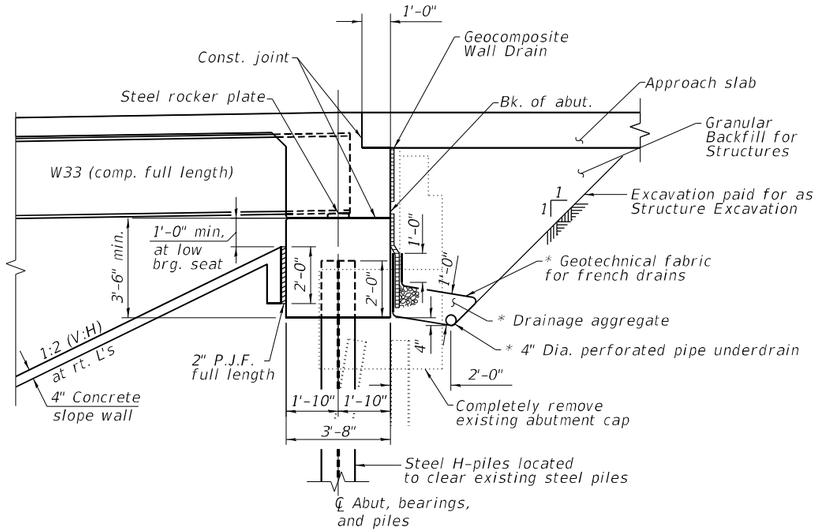

SECTION THROUGH ABUTMENT

(Horizontal dimensions at rt. L's)

* Included in the cost of Pipe Underdrains for Structures. (See Special Provisions.

All drainage system components shall extend to 2'-0" from the end of each wingwall except an outlet pipe shall extend until intersecting with the side slopes. The pipes shall drain into concrete headwalls. (See Article 601.05 of the Standard Specifications and Highway Standard 601101).

TOTAL BILL OF MATERIAL (S.N. 041-0115)

ITEM	UNIT	SUPER	SUB	TOTAL
Removal of Existing Structures No. 1	Each	1		1
Protective Shield	Sq. Yd.	550		550
Structure Excavation	Cu. Yd.		871	871
Concrete Structures	Cu. Yd.		372.5	372.5
Concrete Superstructure	Cu. Yd.	365.0		365.0
Protective Coat	Sq. Yd.	1615	16	1631
Concrete Superstructure (Approach Slab)	Cu. Yd.	180.6		180.6
Furnishing and Erecting Structural Steel	L. Sum	0.25		0.25
Stud Shear Connectors	Each	5670		5670
Reinforcement Bars, Epoxy Coated	Pound	157180	57410	214590
Slope Wall, 4 Inch	Sq. Yd.		889	889
Furnishing Steel Piles HP 12x53	Foot		1214	1214
Driving Piles	Foot		1214	1214
Test Pile Steel HP 12x53	Each		3	3
Name Plates	Each	1		1
Anchor Bolts, 1"	Each		54	54
Temporary Sheet Piling	Sq. Ft.		2314	2314
Granular Backfill for Structures	Cu. Yd.		239	239
Concrete Sealer	Sq. Ft.		615	615
Geocomposite Wall Drain	Sq. Yd.		132	132
Bridge Deck Grooving (Longitudinal)	Sq. Yd.	555		555
Construction Layout	L. Sum	0.25		0.25
Diamond Grinding (Bridge Section)	Sq. Yd.	1669		1669
Pipe Underdrains for Structures 4"	Foot		182	182

TOTAL BILL OF MATERIAL (S.N. 041-0116)

ITEM	UNIT	SUPER	SUB	TOTAL
Removal of Existing Structures No. 2	Each	1		1
Protective Shield	Sq. Yd.	501		501
Structure Excavation	Cu. Yd.		765	765
Concrete Structures	Cu. Yd.		329.2	329.2
Concrete Superstructure	Cu. Yd.	336.6		336.6
Protective Coat	Sq. Yd.	1480	16	1496
Concrete Superstructure (Approach Slab)	Cu. Yd.	164.2		164.2
Furnishing and Erecting Structural Steel	L. Sum	0.25		0.25
Stud Shear Connectors	Each	5040		5040
Reinforcement Bars, Epoxy Coated	Pound	147000	51950	198950
Slope Wall, 4 Inch	Sq. Yd.		805	805
Furnishing Steel Piles HP 12x53	Foot		1131	1131
Driving Piles	Foot		1131	1131
Test Pile Steel HP 12x53	Each		3	3
Name Plates	Each	1		1
Anchor Bolts, 1"	Each		48	48
Temporary Sheet Piling	Sq. Ft.		2158	2158
Granular Backfill for Structures	Cu. Yd.		194	194
Concrete Sealer	Sq. Ft.		555	555
Geocomposite Wall Drain	Sq. Yd.		113	113
Bridge Deck Grooving (Longitudinal)	Sq. Yd.	555		555
Construction Layout	L. Sum	0.25		0.25
Diamond Grinding (Bridge Section)	Sq. Yd.	1445		1445
Pipe Underdrains for Structures 4"	Foot		170	170

GENERAL NOTES

1. Fasteners shall be ASTM F 3125 Grade A325 Type 1, mechanically galvanized bolts. Bolts 7/8" dia., holes 15/16" dia., unless otherwise noted.
2. Calculated weight of Structural Steel (M270 Grade 50) = 257,400 lbs. (041-0115)
   Calculated weight of Structural Steel (M270 Grade 36) = 31,680 lbs. (041-0115)
   Calculated weight of Structural Steel (M270 Grade 50) = 228,800 lbs. (041-0116)
   Calculated weight of Structural Steel (M270 Grade 36) = 28,160 lbs. (041-0116)
3. No field welding is permitted except as specified in the contract documents.
4. Reinforcement bars designated (E) shall be epoxy coated.
5. Bearing seat surfaces shall be constructed or adjusted to the designated elevations within a tolerance of 1/8" (0.01 ft.). Adjustment shall be made either by grinding the surface or by shimming the bearings.
6. Concrete Sealer shall be applied to all exposed surfaces of piers.
7. The existing strucural steel coating contains lead. The Contractor shall take appropriate precautions to deal with the presence of lead on this project.
8. The Organic Zinc Rich Primer/Epoxy/Urethane Paint System shall be used for painting of new structural steel except where otherwise noted. The entire system shall be shop applied, with the exception that the exterior surfaces and bottom of the bottom flange of the fascia beams, masked off connection surfaces, and field installed fasteners. All of which shall be touched up and finish coated in the field. The color of the final finish coat for all interior steel surfaces shall be gray, Munsell No. 5B 7/1. The color of the final finish coat for the exterior and bottom flange of the fascia beams shall be Blue, Munsell No. 10B 3/6. See Special Provision for "Cleaning and Painting New Metal Structures."

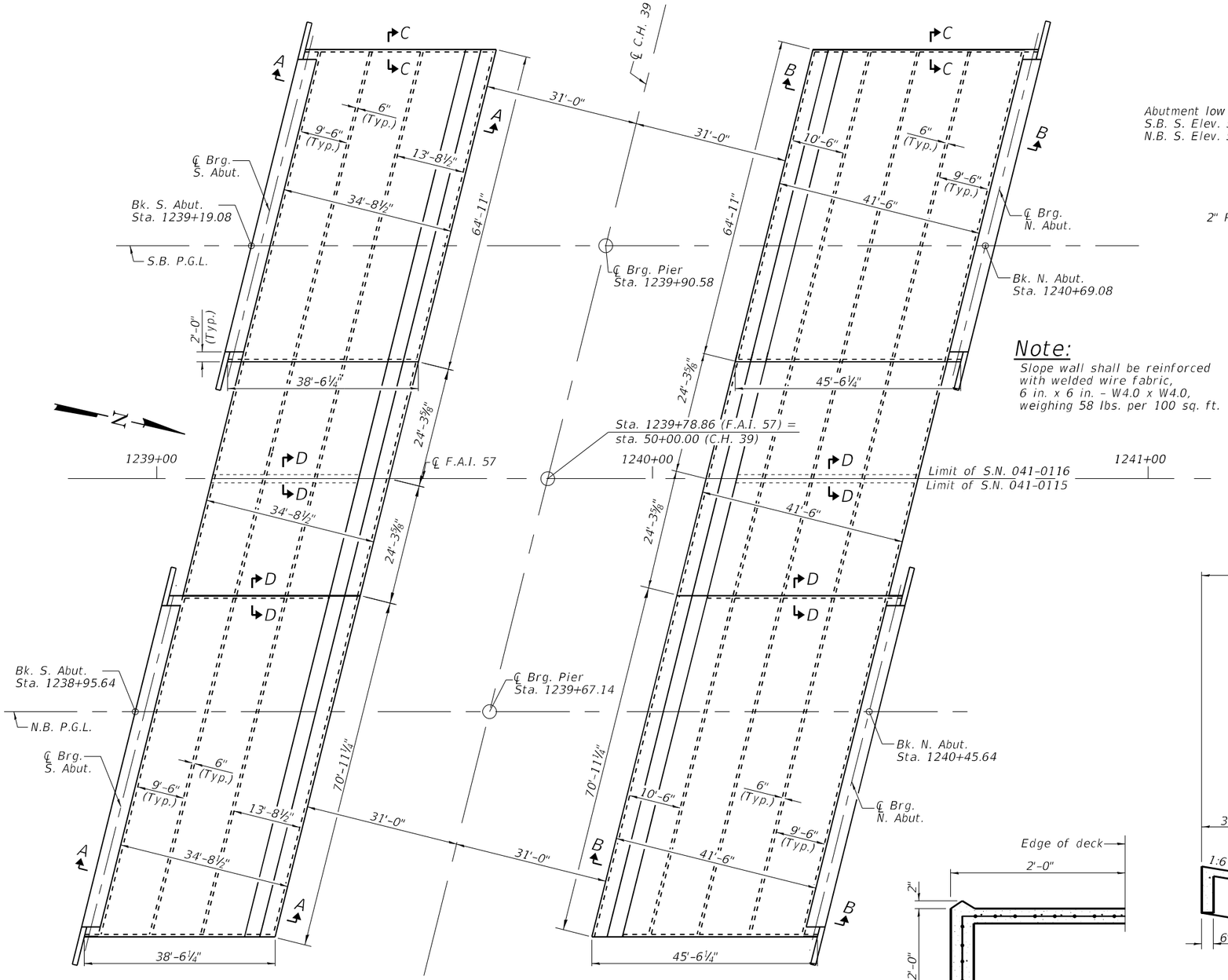

SLOPE WALL PLAN

S.N. 041-0115 & 041-0116

Note:

Slope wall shall be reinforced with welded wire fabric, 6 in. x 6 in. - W4.0 x W4.0, weighing 58 lbs. per 100 sq. ft.

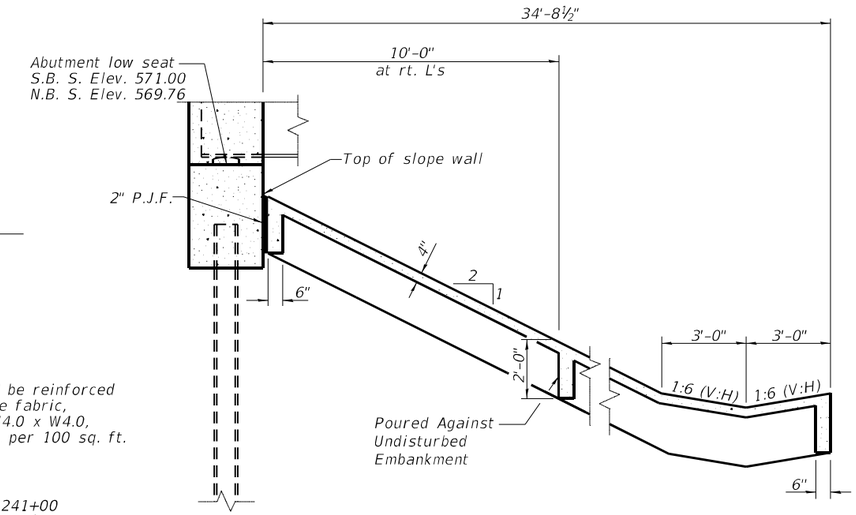

SECTION A-A

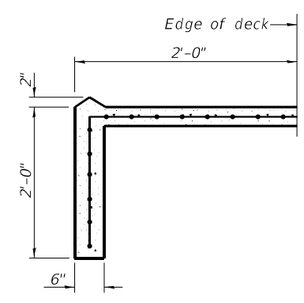

SECTION C-C

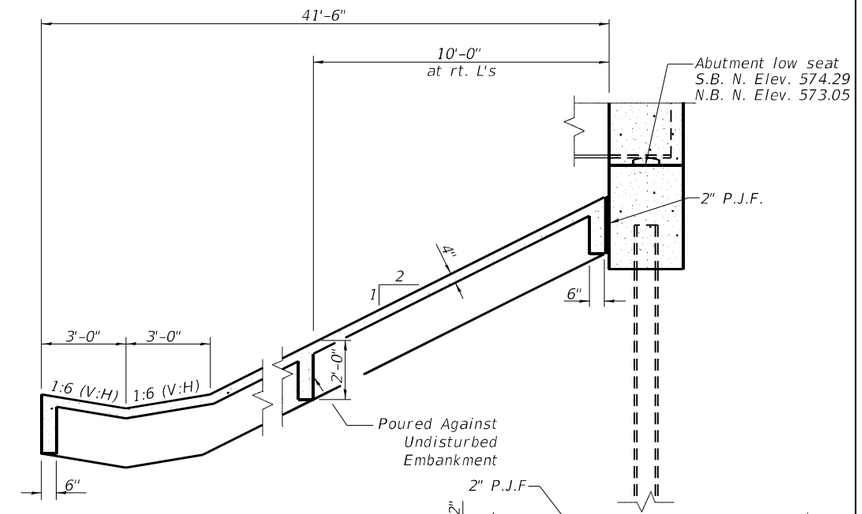

SECTION B-B

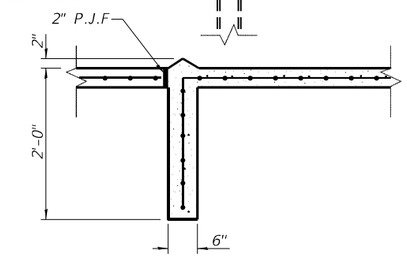

SECTION D-D

BILL OF MATERIAL

S.N. 041-0115

ITEM	UNIT	TOTAL
STRUCTURE EXCAVATION	CU. YD.	83
SLOPE WALL, 4 INCH	SQ. YD.	889

BILL OF MATERIAL

S.N. 041-0116

ITEM	UNIT	TOTAL
STRUCTURE EXCAVATION	CU. YD.	75
SLOPE WALL, 4 INCH	SQ. YD.	805

MODEL: Default
FILE NAME: L:\IDOT\190681\DWG_ip\Drawl\Structures\003A-Slopewalls.dgn

CMT
License No. 184-000613
© Copyright CMT, Inc.

USER NAME = Derek Cochran	DESIGNED - AI	REVISED -	
	CHECKED -	REVISED -	
PLOT SCALE = N/A	DRAWN - GLD	REVISED -	
PLOT DATE = 3/5/2021 (8:04:46 AM)	CHECKED -	REVISED -	

STATE OF ILLINOIS
DEPARTMENT OF TRANSPORTATION

SLOPEWALL DETAILS
STRUCTURE NO. 041–0115 (N.B.) & 041–0116 (S.B.)

SHEET 3 OF 37 SHEETS

F.A.I. RTE.	SECTION	COUNTY	TOTAL SHEETS	SHEET NO.
57	(41-4)B-2	JEFFERSON	257	105
		CONTRACT NO. 78550		
		ILLINOIS	FED. AID PROJECT	

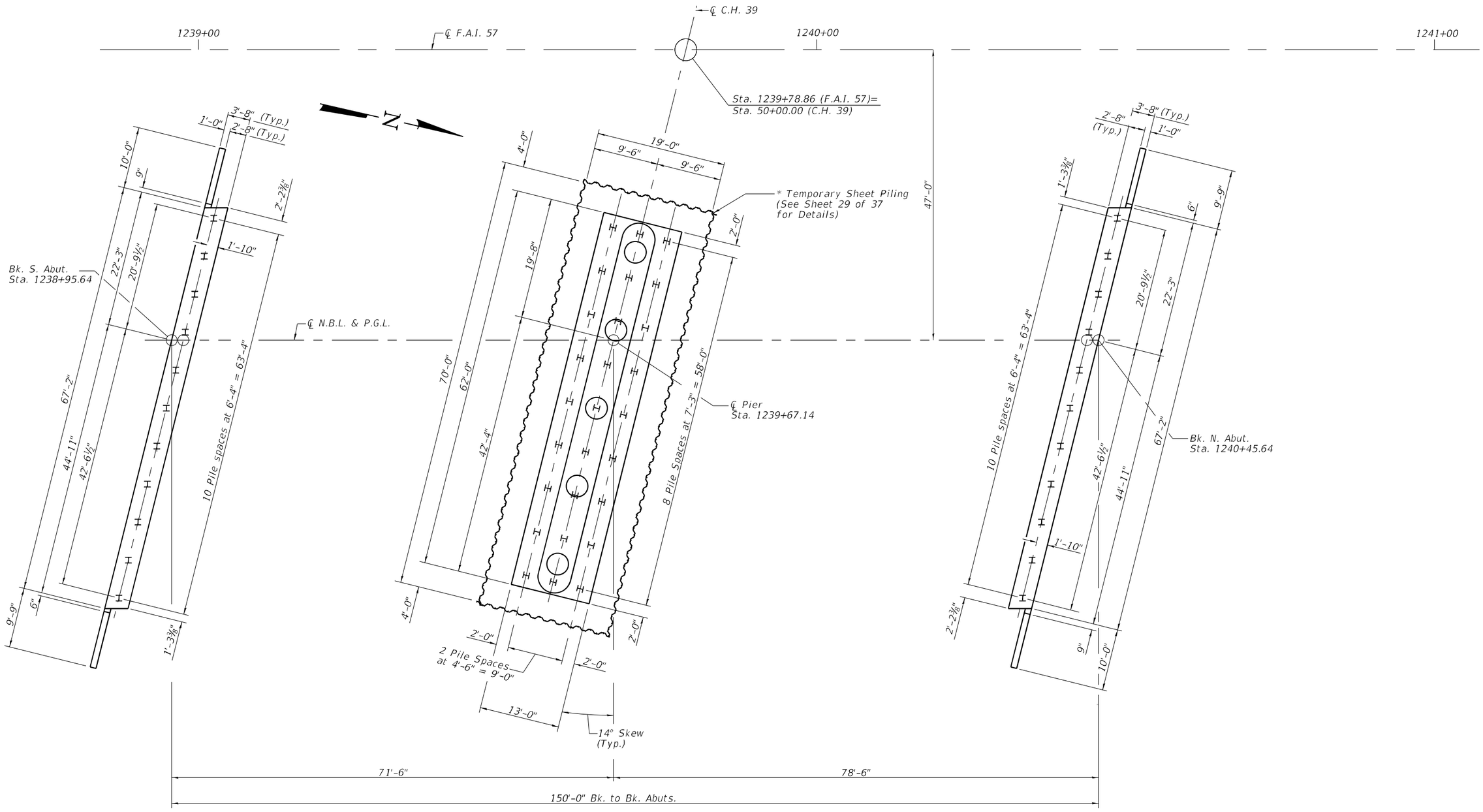

FOOTING LAYOUT PLAN

S.N. 041-0115

* If the Contractor chooses to alter the temporary cantilevered sheet piling design requirements shown on the plans, a design submittal including plan details and calculations will be required for review and acceptance by the Engineer.

MODEL: Default
FILE NAME: L:\IDOT\190610\WO_6\Draw\Structures\903-Footing Layout.dgn

CMT
License No. 184-000613
© Copyright CMT, Inc.

USER NAME = Derek Cochran	DESIGNED - AI	REVISED -	
	CHECKED -	REVISED -	
PLOT SCALE = N/A	DRAWN - GLD	REVISED -	
PLOT DATE = 3/5/2021 (8:04:48 AM)	CHECKED -	REVISED -	

STATE OF ILLINOIS
DEPARTMENT OF TRANSPORTATION

FOOTING LAYOUT (NB)
STRUCTURE NO. 041–0115 (NB)

SHEET 4 OF 37 SHEETS

F.A.I. RTE.	SECTION	COUNTY	TOTAL SHEETS	SHEET NO.
57	(41-4)B-2	JEFFERSON	257	106
		CONTRACT NO. 78550		
	ILLINOIS	FED. AID PROJECT		

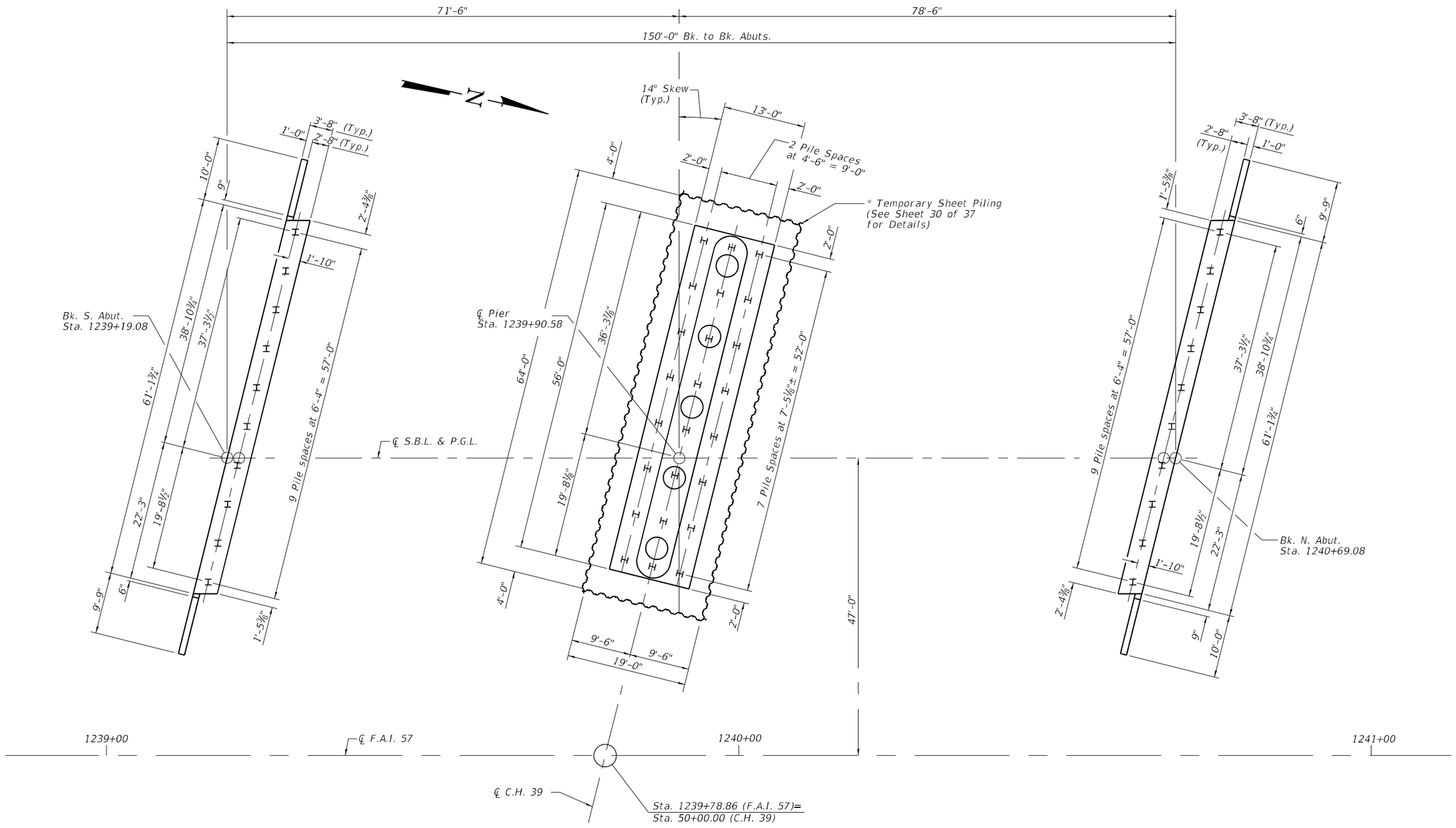

FOOTING LAYOUT PLAN

S.N. 041-0116

* If the Contractor chooses to alter the temporary cantilevered sheet piling design requirements shown on the plans, a design submittal including plan details and calculations will be required for review and acceptance by the Engineer.

MODEL: Default
FILE NAME: L:\IDOT\190661\01\WO_6\Draw\Structures\0034-Footing Layout.dgn

CMT License No. 184-000613 © Copyright CMT, Inc.	USER NAME = Derek Cochran	DESIGNED - AI	REVISED -	STATE OF ILLINOIS DEPARTMENT OF TRANSPORTATION	FOOTING LAYOUT (SB) STRUCTURE NO. 041-0116 (SB)
		CHECKED -	REVISED -		
	PLOT SCALE = N/A	DRAWN - GLD	REVISED -		
	PLOT DATE = 3/5/2021 (8:04:49 AM)	CHECKED -	REVISED -		SHEET 5 OF 37 SHEETS

F.A.I. RTE.	SECTION	COUNTY	TOTAL SHEETS	SHEET NO.
57	(41-4)B-2	JEFFERSON	257	107
		CONTRACT NO. 78550		
	ILLINOIS	FED. AID PROJECT		

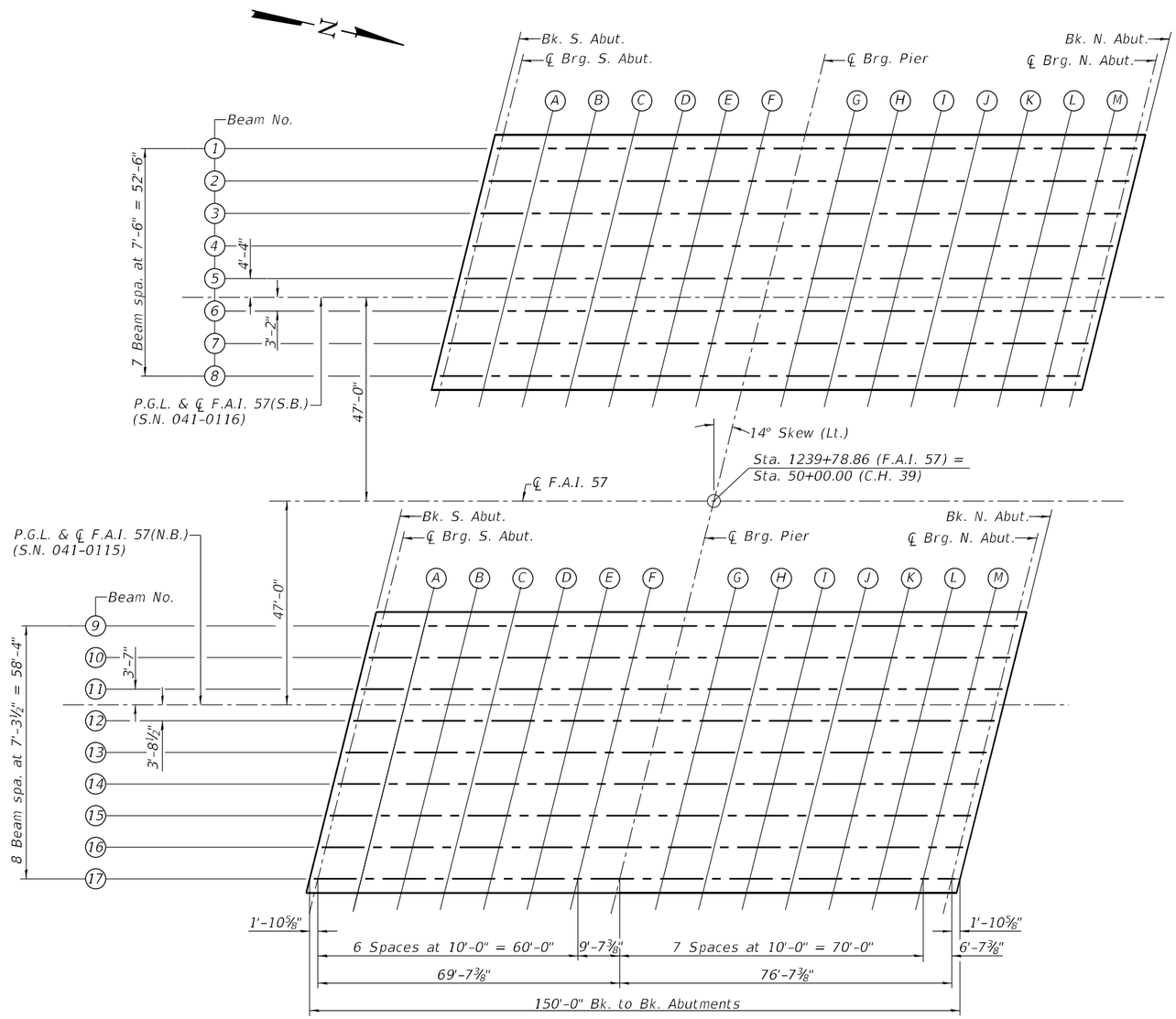

LAYOUT PLAN FOR DECK ELEVATIONS

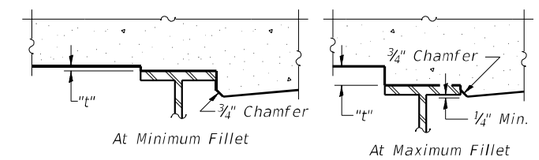

To determine "t": After all structural steel has been erected, elevations of the top flanges of the beams shall be taken at intervals shown below. These elevations subtracted from the "Theoretical Grade Elevations Adjusted for Dead Load Deflection" shown on sheets 7 & 8 of 37, minus slab thickness, equals the fillet heights "t" above top flange of beams.

FILLET HEIGHTS

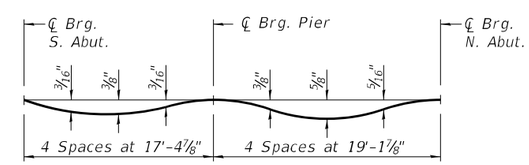

DEAD LOAD DEFLECTION DIAGRAM

(Includes weight of concrete only.)

Note:
The above deflections are not to be used in the field if the engineer is working from the grade elevations adjusted for dead load deflections as shown on sheets 7 & 8 of 37.

MODEL: Default
FILE NAME: L:\IDOT\1906810\WG_#\Drws\Structures\004-Deck Elev 1.dgn

CMT License No. 184-000613 © Copyright CMT, Inc.	USER NAME = Derek Cochran	DESIGNED - AI	REVISED -	STATE OF ILLINOIS DEPARTMENT OF TRANSPORTATION	DECK ELEVATIONS 1 STRUCTURE NO. 041–0115 (NB) & 041–0116 (SB)
		CHECKED -	REVISED -		
	PLOT SCALE = N/A	DRAWN - GLD	REVISED -		
	PLOT DATE = 3/5/2021 (8:04:50 AM)	CHECKED -	REVISED -		SHEET 6 OF 37 SHEETS

F.A.I. RTE.	SECTION	COUNTY	TOTAL SHEETS	SHEET NO.
57	(41-4)B-2	JEFFERSON	257	108
		CONTRACT NO. 78550		
	ILLINOIS	FED. AID PROJECT		

BEAM 1

LOCATION	STATION	OFFSET	THEORETICAL GRADE ELEVATION	THEORETICAL GRADE ELEV. ADJUSTED FOR DEAD LOAD DEFLECTION AND DECK GRINDING
Bk. S. Abut.	1239+27.64	-34.33	574.67	574.69
℄ Brg. S. Abut.	1239+29.53	-34.33	574.71	574.73
A	1239+39.53	-34.33	574.93	574.96
B	1239+49.53	-34.33	575.16	575.20
C	1239+59.53	-34.33	575.38	575.43
D	1239+69.53	-34.33	575.61	575.66
E	1239+79.53	-34.33	575.83	575.87
F	1239+89.53	-34.33	576.06	576.09
℄ Pier	1239+99.14	-34.33	576.27	576.30
G	1240+09.14	-34.33	576.50	576.53
H	1240+19.14	-34.33	576.72	576.78
I	1240+29.14	-34.33	576.95	577.02
J	1240+39.14	-34.33	577.17	577.25
K	1240+49.14	-34.33	577.40	577.46
L	1240+59.14	-34.33	577.62	577.67
M	1240+69.14	-34.33	577.85	577.88
℄ Brg. N. Abut.	1240+75.76	-34.33	578.00	578.02
Bk. N. Abut.	1240+77.65	-34.33	578.04	578.06

BEAM 2

LOCATION	STATION	OFFSET	THEORETICAL GRADE ELEVATION	THEORETICAL GRADE ELEV. ADJUSTED FOR DEAD LOAD DEFLECTION AND DECK GRINDING
Bk. S. Abut.	1239+25.77	-26.83	574.77	574.79
℄ Brg. S. Abut.	1239+27.66	-26.83	574.82	574.84
A	1239+37.66	-26.83	575.04	575.07
B	1239+47.66	-26.83	575.27	575.31
C	1239+57.66	-26.83	575.49	575.54
D	1239+67.66	-26.83	575.72	575.76
E	1239+77.66	-26.83	575.94	575.98
F	1239+87.66	-26.83	576.17	576.19
℄ Pier	1239+97.27	-26.83	576.38	576.40
G	1240+07.27	-26.83	576.61	576.64
H	1240+17.27	-26.83	576.83	576.89
I	1240+27.27	-26.83	577.06	577.13
J	1240+37.27	-26.83	577.28	577.36
K	1240+47.27	-26.83	577.51	577.57
L	1240+57.27	-26.83	577.73	577.78
M	1240+67.27	-26.83	577.96	577.98
℄ Brg. N. Abut.	1240+73.89	-26.83	578.11	578.13
Bk. N. Abut.	1240+75.78	-26.83	578.15	578.17

BEAM 3

LOCATION	STATION	OFFSET	THEORETICAL GRADE ELEVATION	THEORETICAL GRADE ELEV. ADJUSTED FOR DEAD LOAD DEFLECTION AND DECK GRINDING
Bk. S. Abut.	1239=23.90	-19.33	574.88	574.90
℄ Brg. S. Abut.	1239+25.79	-19.33	574.92	574.95
A	1239+35.79	-19.33	575.15	575.18
B	1239+45.79	-19.33	575.37	575.42
C	1239+55.79	-19.33	575.60	575.65
D	1239+65.79	-19.33	575.82	575.87
E	1239+75.79	-19.33	576.05	576.09
F	1239+85.79	-19.33	576.27	576.30
℄ Pier	1239+95.40	-19.33	576.49	576.51
G	1240+05.40	-19.33	576.72	576.75
H	1240+15.40	-19.33	576.94	576.99
I	1240+25.40	-19.33	577.17	577.24
J	1240+35.40	-19.33	577.39	577.46
K	1240+45.40	-19.33	577.62	577.68
L	1240+55.40	-19.33	577.84	577.89
M	1240+65.40	-19.33	578.07	578.09
℄ Brg. N. Abut.	1240+72.02	-19.33	578.21	578.24
Bk. N. Abut.	1240+73.91	-19.33	578.26	578.28

BEAM 4

LOCATION	STATION	OFFSET	THEORETICAL GRADE ELEVATION	THEORETICAL GRADE ELEV. ADJUSTED FOR DEAD LOAD DEFLECTION AND DECK GRINDING
Bk. S. Abut.	1239+22.03	-11.83	574.99	575.01
℄ Brg. S. Abut.	1239=23.92	-11.83	575.03	575.05
A	1239+33.92	-11.83	575.26	575.28
B	1239+43.92	-11.83	575.48	575.52
C	1239+53.92	-11.83	575.71	575.76
D	1239+63.92	-11.83	575.93	575.98
E	1239+73.92	-11.83	576.16	576.20
F	1239+83.92	-11.83	576.38	576.41
℄ Pier	1239+93.53	-11.83	576.60	576.62
G	1240+03.53	-11.83	576.82	576.86
H	1240+13.53	-11.83	577.05	577.10
I	1240+23.53	-11.83	577.27	577.34
J	1240+33.53	-11.83	577.50	577.57
K	1240+43.53	-11.83	577.72	577.79
L	1240+53.53	-11.83	577.95	577.99
M	1240+63.53	-11.83	578.17	578.20
℄ Brg. N. Abut.	1240+70.15	-11.83	578.32	578.34
Bk. N. Abut.	1240+72.04	-11.83	578.36	578.38

BEAM 5

LOCATION	STATION	OFFSET	THEORETICAL GRADE ELEVATION	THEORETICAL GRADE ELEV. ADJUSTED FOR DEAD LOAD DEFLECTION AND DECK GRINDING
Bk. S. Abut.	1239+20.16	-4.33	575.06	575.08
℄ Brg. S. Abut.	1239+22.05	-4.33	575.10	575.12
A	1239+32.05	-4.33	575.33	575.35
B	1239+42.05	-4.33	575.55	575.59
C	1239+52.05	-4.33	575.78	575.83
D	1239+62.05	-4.33	576.00	576.05
E	1239+72.05	-4.33	576.23	576.27
F	1239+82.05	-4.33	576.45	576.48
℄ Pier	1239+91.66	-4.33	576.67	576.69
G	1240+01.66	-4.33	576.89	576.93
H	1240+11.66	-4.33	577.12	577.17
I	1240+21.66	-4.33	577.34	577.41
J	1240+31.66	-4.33	577.57	577.64
K	1240+41.66	-4.33	577.79	577.86
L	1240+51.66	-4.33	578.02	578.06
M	1240+61.66	-4.33	578.24	578.27
℄ Brg. N. Abut.	1240+68.28	-4.33	578.39	578.41
Bk. N. Abut.	1240+70.17	-4.33	578.43	578.46

℄ F.A.I. 57(S.B.) & P.G.L.

LOCATION	STATION	OFFSET	THEORETICAL GRADE ELEVATION	THEORETICAL GRADE ELEV. ADJUSTED FOR DEAD LOAD DEFLECTION AND DECK GRINDING
Bk. S. Abut.	1239+19.08	0.00	575.10	575.12
℄ Brg. S. Abut.	1239+20.97	0.00	575.14	575.16
A	1239+30.97	0.00	575.37	575.40
B	1239+40.97	0.00	575.59	575.63
C	1239+50.97	0.00	575.82	575.87
D	1239+60.97	0.00	576.04	576.09
E	1239+70.97	0.00	576.27	576.31
F	1239+80.97	0.00	576.49	576.52
℄ Pier	1239+90.58	0.00	576.71	576.73
G	1240+00.58	0.00	576.93	576.97
H	1240+10.58	0.00	577.16	577.21
I	1240+20.58	0.00	577.38	577.45
J	1240+30.58	0.00	577.61	577.68
K	1240+40.58	0.00	577.83	577.90
L	1240+50.58	0.00	578.06	578.10
M	1240+60.58	0.00	578.28	578.31
℄ Brg. N. Abut.	1240+67.20	0.00	578.43	578.45
Bk. N. Abut.	1240+69.09	0.00	578.48	578.50

BEAM 6

LOCATION	STATION	OFFSET	THEORETICAL GRADE ELEVATION	THEORETICAL GRADE ELEV. ADJUSTED FOR DEAD LOAD DEFLECTION AND DECK GRINDING
Bk. S. Abut.	1239+18.29	3.17	575.03	575.06
℄ Brg. S. Abut.	1239+20.18	3.17	575.08	575.10
A	1239+30.18	3.17	575.30	575.33
B	1239+40.18	3.17	575.53	575.57
C	1239+50.18	3.17	575.75	575.80
D	1239+60.18	3.17	575.98	576.03
E	1239+70.18	3.17	576.20	576.24
F	1239+80.18	3.17	576.43	576.45
℄ Pier	1239+89.79	3.17	576.64	576.66
G	1239+99.79	3.17	576.87	576.90
H	1240+09.79	3.17	577.09	577.15
I	1240+19.79	3.17	577.32	577.39
J	1240+29.79	3.17	577.54	577.62
K	1240+39.79	3.17	577.77	577.83
L	1240+49.79	3.17	577.99	578.04
M	1240+59.79	3.17	578.22	578.25
℄ Brg. N. Abut.	1240+66.41	3.17	578.37	578.39
Bk. N. Abut.	1240+68.30	3.17	578.41	578.43

BEAM 7

LOCATION	STATION	OFFSET	THEORETICAL GRADE ELEVATION	THEORETICAL GRADE ELEV. ADJUSTED FOR DEAD LOAD DEFLECTION AND DECK GRINDING
Bk. S. Abut.	1239+16.42	10.67	574.88	574.90
℄ Brg. S. Abut.	1239+18.31	10.67	574.92	574.94
A	1239+28.31	10.67	575.15	575.18
B	1239+38.31	10.67	575.37	575.41
C	1239+48.31	10.67	575.60	575.65
D	1239+58.31	10.67	575.82	575.87
E	1239+68.31	10.67	576.05	576.09
F	1239+78.31	10.67	576.27	576.30
℄ Pier	1239+87.92	10.67	576.49	576.51
G	1239+97.92	10.67	576.71	576.75
H	1240+07.92	10.67	576.94	576.99
I	1240+17.92	10.67	577.16	577.23
J	1240+27.92	10.67	577.39	577.46
K	1240+37.92	10.67	577.61	577.68
L	1240+47.92	10.67	577.84	577.88
M	1240+57.92	10.67	578.06	578.09
℄ Brg. N. Abut.	1240+64.54	10.67	578.21	578.23
Bk. N. Abut.	1240+66.43	10.67	578.26	578.28

BEAM 8

LOCATION	STATION	OFFSET	THEORETICAL GRADE ELEVATION	THEORETICAL GRADE ELEV. ADJUSTED FOR DEAD LOAD DEFLECTION AND DECK GRINDING
Bk. S. Abut.	1239+14.55	18.17	574.69	574.72
℄ Brg. S. Abut.	1239+16.44	18.17	574.74	574.76
A	1239+26.44	18.17	574.96	574.99
B	1239+36.44	18.17	575.19	575.23
C	1239+46.44	18.17	575.41	575.46
D	1239+56.44	18.17	575.64	575.69
E	1239+66.44	18.17	575.86	575.90
F	1239+76.44	18.17	576.09	576.11
℄ Pier	1239+86.05	18.17	576.30	576.32
G	1239+96.05	18.17	576.53	576.56
H	1240+06.05	18.17	576.75	576.81
I	1240+16.05	18.17	576.98	577.05
J	1240+26.05	18.17	577.20	577.28
K	1240+36.05	18.17	577.43	577.49
L	1240+46.05	18.17	577.65	577.70
M	1240+56.05	18.17	577.88	577.91
℄ Brg. N. Abut.	1240+62.67	18.17	578.03	578.05
Bk. N. Abut.	1240+64.56	18.17	578.07	578.09

BEAM 9

LOCATION	STATION	OFFSET	THEORETICAL GRADE ELEVATION	THEORETICAL GRADE ELEV. ADJUSTED FOR DEAD LOAD DEFLECTION AND DECK GRINDING
Bk. S. Abut.	1239+00.17	-18.17	574.19	574.21
℄ Brg. S. Abut.	1239+02.06	-18.17	574.23	574.25
A	1239+12.06	-18.17	574.46	574.48
B	1239+22.06	-18.17	574.68	574.72
C	1239+32.06	-18.17	574.91	574.95
D	1239+42.06	-18.17	575.13	575.18
E	1239+52.06	-18.17	575.36	575.39
F	1239+62.06	-18.17	575.58	575.61
℄ Pier	1239+71.67	-18.17	575.80	575.82
G	1239+81.67	-18.17	576.02	576.06
H	1239+91.67	-18.17	576.25	576.30
I	1240+01.67	-18.17	576.47	576.54
J	1240+11.67	-18.17	576.70	576.77
K	1240+21.67	-18.17	576.92	576.98
L	1240+31.67	-18.17	577.15	577.19
M	1240+41.67	-18.17	577.37	577.40
℄ Brg. N. Abut.	1240+48.29	-18.17	577.52	577.54
Bk. N. Abut.	1240+50.18	-18.17	577.56	577.58

BEAM 10

LOCATION	STATION	OFFSET	THEORETICAL GRADE ELEVATION	THEORETICAL GRADE ELEV. ADJUSTED FOR DEAD LOAD DEFLECTION AND DECK GRINDING
Bk. S. Abut.	1238+98.35	-10.88	574.29	574.31
℄ Brg. S. Abut.	1239+00.24	-10.88	574.33	574.35
A	1239+10.24	-10.88	574.56	574.58
B	1239+20.24	-10.88	574.78	574.82
C	1239+30.24	-10.88	575.01	575.05
D	1239+40.24	-10.88	575.23	575.28
E	1239+50.24	-10.88	575.46	575.49
F	1239+60.24	-10.88	575.68	575.71
℄ Pier	1239+69.86	-10.88	575.90	575.92
G	1239+79.86	-10.88	576.12	576.16
H	1239+89.86	-10.88	576.35	576.40
I	1239+99.86	-10.88	576.57	576.64
J	1240+09.86	-10.88	576.80	576.87
K	1240+19.86	-10.88	577.02	577.08
L	1240+29.86	-10.88	577.25	577.29
M	1240+39.86	-10.88	577.47	577.50
℄ Brg. N. Abut.	1240+46.47	-10.88	577.62	577.64
Bk. N. Abut.	1240+48.36	-10.88	577.66	577.68

BEAM 11

LOCATION	STATION	OFFSET	THEORETICAL GRADE ELEVATION	THEORETICAL GRADE ELEV. ADJUSTED FOR DEAD LOAD DEFLECTION AND DECK GRINDING
Bk. S. Abut.	1238+96.53	-3.58	574.36	574.38
℄ Brg. S. Abut.	1238+98.42	-3.58	574.40	574.42
A	1239+08.42	-3.58	574.62	574.65
B	1239+18.42	-3.58	574.85	574.89
C	1239+28.42	-3.58	575.07	575.12
D	1239+38.42	-3.58	575.30	575.35
E	1239+48.42	-3.58	575.52	575.56
F	1239+58.42	-3.58	575.75	575.78
℄ Pier	1239+68.04	-3.58	575.97	575.99
G	1239+78.04	-3.58	576.19	576.22
H	1239+88.04	-3.58	576.42	576.47
I	1239+98.04	-3.58	576.64	576.71
J	1240+08.04	-3.58	576.87	576.94
K	1240+18.04	-3.58	577.09	577.15
L	1240+28.04	-3.58	577.32	577.36
M	1240+38.04	-3.58	577.54	577.57
℄ Brg. N. Abut.	1240+44.65	-3.58	577.69	577.71
Bk. N. Abut.	1240+46.54	-3.58	577.73	577.75

℄ F.A.I. 57(N.B.) & P.G.L.

LOCATION	STATION	OFFSET	THEORETICAL GRADE ELEVATION	THEORETICAL GRADE ELEV. ADJUSTED FOR DEAD LOAD DEFLECTION AND DECK GRINDING
Bk. S. Abut.	1238+95.64	0.00	574.39	574.41
℄ Brg. S. Abut.	1238+97.53	0.00	574.43	574.45
A	1239+07.53	0.00	574.66	574.69
B	1239+17.53	0.00	574.88	574.92
C	1239+27.53	0.00	575.11	575.16
D	1239+37.53	0.00	575.33	575.38
E	1239+47.53	0.00	575.56	575.60
F	1239+57.53	0.00	575.78	575.81
℄ Pier	1239+67.14	0.00	576.00	576.02
G	1239+77.14	0.00	576.22	576.26
H	1239+87.14	0.00	576.45	576.50
I	1239+97.14	0.00	576.67	576.74
J	1240+07.14	0.00	576.90	576.97
K	1240+17.14	0.00	577.12	577.19
L	1240+27.14	0.00	577.35	577.39
M	1240+37.14	0.00	577.57	577.60
℄ Brg. N. Abut.	1240+43.76	0.00	577.72	577.74
Bk. N. Abut.	1240+45.65	0.00	577.77	577.79

BEAM 12

LOCATION	STATION	OFFSET	THEORETICAL GRADE ELEVATION	THEORETICAL GRADE ELEV. ADJUSTED FOR DEAD LOAD DEFLECTION AND DECK GRINDING
Bk. S. Abut.	1238+94.72	3.71	574.31	574.33
℄ Brg. S. Abut.	1238+96.60	3.71	574.36	574.38
A	1239+06.60	3.71	574.58	574.61
B	1239+16.60	3.71	574.81	574.85
C	1239+26.60	3.71	575.03	575.08
D	1239+36.60	3.71	575.26	575.30
E	1239+46.60	3.71	575.48	575.52
F	1239+56.60	3.71	575.71	575.73
℄ Pier	1239+66.22	3.71	575.92	575.94
G	1239+76.22	3.71	576.15	576.18
H	1239+86.22	3.71	576.37	576.43
I	1239+96.22	3.71	576.60	576.67
J	1240+06.22	3.71	576.82	576.89
K	1240+16.22	3.71	577.05	577.11
L	1240+26.22	3.71	577.27	577.32
M	1240+36.22	3.71	577.50	577.52
℄ Brg. N. Abut.	1240+42.83	3.71	577.65	577.67
Bk. N. Abut.	1240+44.72	3.71	577.69	577.71

BEAM 13

LOCATION	STATION	OFFSET	THEORETICAL GRADE ELEVATION	THEORETICAL GRADE ELEV. ADJUSTED FOR DEAD LOAD DEFLECTION AND DECK GRINDING
Bk. S. Abut.	1238+92.90	11.00	574.16	574.18
℄ Brg. S. Abut.	1238+94.79	11.00	574.21	574.23
A	1239+04.79	11.00	574.43	574.46
B	1239+14.79	11.00	574.66	574.70
C	1239+24.79	11.00	574.88	574.93
D	1239+34.79	11.00	575.11	575.15
E	1239+44.79	11.00	575.33	575.37
F	1239+54.79	11.00	575.56	575.58
℄ Pier	1239+64.40	11.00	575.77	575.79
G	1239+74.40	11.00	576.00	576.03
H	1239+84.40	11.00	576.22	576.28
I	1239+94.40	11.00	576.45	576.52
J	1240+04.40	11.00	576.67	576.74
K	1240+14.40	11.00	576.90	576.96
L	1240+24.40	11.00	577.12	577.17
M	1240+34.40	11.00	577.35	577.37
℄ Brg. N. Abut.	1240+41.02	11.00	577.50	577.52
Bk. N. Abut.	1240+42.91	11.00	577.54	577.56

BEAM 14

LOCATION	STATION	OFFSET	THEORETICAL GRADE ELEVATION	THEORETICAL GRADE ELEV. ADJUSTED FOR DEAD LOAD DEFLECTION AND DECK GRINDING
Bk. S. Abut.	1238+91.08	18.29	573.98	574.00
℄ Brg. S. Abut.	1238+92.97	18.29	574.02	574.04
A	1239+02.97	18.29	574.25	574.28
B	1239+12.97	18.29	574.47	574.51
C	1239+22.97	18.29	574.70	574.75
D	1239+32.97	18.29	574.92	574.97
E	1239+42.97	18.29	575.15	575.19
F	1239+52.97	18.29	575.37	575.40
℄ Pier	1239+62.58	18.29	575.59	575.61
G	1239+72.58	18.29	575.82	575.85
H	1239+82.58	18.29	576.04	576.09
I	1239+92.58	18.29	576.27	576.33
J	1240+02.58	18.29	576.49	576.56
K	1240+12.58	18.29	576.72	576.78
L	1240+22.58	18.29	576.94	576.98
M	1240+32.58	18.29	577.17	577.19
℄ Brg. N. Abut.	1240+39.20	18.29	577.31	577.34
Bk. N. Abut.	1240+41.09	18.29	577.36	577.38

BEAM 15

LOCATION	STATION	OFFSET	THEORETICAL GRADE ELEVATION	THEORETICAL GRADE ELEV. ADJUSTED FOR DEAD LOAD DEFLECTION AND DECK GRINDING
Bk. S. Abut.	1238+89.26	25.58	573.79	573.82
℄ Brg. S. Abut.	1238+91.15	25.58	573.84	573.86
A	1239+01.15	25.58	574.06	574.09
B	1239+11.15	25.58	574.29	574.33
C	1239+21.15	25.58	574.51	574.56
D	1239+31.15	25.58	574.74	574.79
E	1239+41.15	25.58	574.96	575.00
F	1239+51.15	25.58	575.19	575.21
℄ Pier	1239+60.77	25.58	575.40	575.42
G	1239+70.77	25.58	575.63	575.66
H	1239+80.77	25.58	575.85	575.91
I	1239+90.77	25.58	576.08	576.15
J	1240+00.77	25.58	576.30	576.38
K	1240+10.77	25.58	576.53	576.59
L	1240+20.77	25.58	576.75	576.80
M	1240+30.77	25.58	576.98	577.01
℄ Brg. N. Abut.	1240+37.38	25.58	577.13	577.15
Bk. N. Abut.	1240+39.27	25.58	577.17	577.19

BEAM 16

LOCATION	STATION	OFFSET	THEORETICAL GRADE ELEVATION	THEORETICAL GRADE ELEV. ADJUSTED FOR DEAD LOAD DEFLECTION AND DECK GRINDING
Bk. S. Abut.	1238+87.44	32.88	573.61	573.63
℄ Brg. S. Abut.	1238+89.33	32.88	573.65	573.67
A	1238+99.33	32.88	573.88	573.90
B	1239+09.33	32.88	574.10	574.14
C	1239+19.33	32.88	574.33	574.37
D	1239+29.33	32.88	574.55	574.60
E	1239+39.33	32.88	574.78	574.81
F	1239+49.33	32.88	575.00	575.03
℄ Pier	1239+58.95	32.88	575.22	575.24
G	1239+68.95	32.88	575.44	575.48
H	1239+78.95	32.88	575.67	575.72
I	1239+88.95	32.88	575.89	575.96
J	1239+98.95	32.88	576.12	576.19
K	1240+08.95	32.88	576.34	576.40
L	1240+18.95	32.88	576.57	576.61
M	1240+28.95	32.88	576.79	576.82
℄ Brg. N. Abut.	1240+35.56	32.88	576.94	576.96
Bk. N. Abut.	1240+37.45	32.88	576.98	577.00

BEAM 17

LOCATION	STATION	OFFSET	THEORETICAL GRADE ELEVATION	THEORETICAL GRADE ELEV. ADJUSTED FOR DEAD LOAD DEFLECTION AND DECK GRINDING
Bk. S. Abut.	1238+85.63	40.17	573.42	573.44
℄ Brg. S. Abut.	1238+87.51	40.17	573.46	573.48
A	1238+97.51	40.17	573.69	573.72
B	1239+07.51	40.17	573.91	573.95
C	1239+17.51	40.17	574.14	574.19
D	1239+27.51	40.17	574.36	574.41
E	1239+37.51	40.17	574.59	574.63
F	1239+47.51	40.17	574.81	574.84
℄ Pier	1239+57.13	40.17	575.03	575.05
G	1239+67.13	40.17	575.26	575.29
H	1239+77.13	40.17	575.48	575.53
I	1239+87.13	40.17	575.71	575.77
J	1239+97.13	40.17	575.93	576.00
K	1240+07.13	40.17	576.16	576.22
L	1240+17.13	40.17	576.38	576.42
M	1240+27.13	40.17	576.61	576.63
℄ Brg. N. Abut.	1240+33.74	40.17	576.75	576.77
Bk. N. Abut.	1240+35.63	40.17	576.80	576.82

WEST EDGE OF SHOULDER

LOCATION	STATION	OFFSET	THEOR. GRADE ELEV.	THEOR. GRADE EL. ADJ. FOR GRINDING
S. End of S. Appr.	1238+71.66	-20.000	573.51	573.53
A1	1238+81.66	-20.000	573.74	573.76
A2	1238+91.66	-20.000	573.96	573.98
N. End of S. Appr.	1239+01.66	-20.000	574.19	574.21

WEST EDGE OF PAVEMENT

LOCATION	STATION	OFFSET	THEOR. GRADE ELEV.	THEOR. GRADE EL. ADJ. FOR GRINDING
S. End of S. Appr.	1238+69.66	-12.000	573.63	573.65
A1	1238+79.66	-12.000	573.85	573.87
A2	1238+89.66	-12.000	574.08	574.10
N. End of S. Appr.	1238+99.66	-12.000	574.30	574.32

℄ N. BOUND LANES & P.G.L.

LOCATION	STATION	OFFSET	THEOR. GRADE ELEV.	THEOR. GRADE EL. ADJ. FOR GRINDING
S. End of S. Appr.	1238+66.67	0.000	573.74	573.76
A1	1238+76.67	0.000	573.96	573.98
A2	1238+86.67	0.000	574.19	574.21
N. End of S. Appr.	1238+96.67	0.000	574.41	574.43

EAST EDGE OF PAVEMENT

LOCATION	STATION	OFFSET	THEOR. GRADE ELEV.	THEOR. GRADE EL. ADJ. FOR GRINDING
S. End of S. Appr.	1238+63.68	12.000	573.63	573.65
A1	1238+73.68	12.000	573.85	573.87
A2	1238+83.68	12.000	574.08	574.10
N. End of S. Appr.	1238+93.68	12.000	574.30	574.32

EAST EDGE OF SHOULDER & ENTRANCE RAMP

LOCATION	STATION	OFFSET	THEOR. GRADE ELEV.	THEOR. GRADE EL. ADJ. FOR GRINDING
S. End of S. Appr.	1238+56.20	42.000	573.19	573.21
A1	1238+66.20	42.000	573.42	573.44
A2	1238+76.20	42.000	573.64	573.66
N. End of S. Appr.	1238+86.20	42.000	573.87	573.89

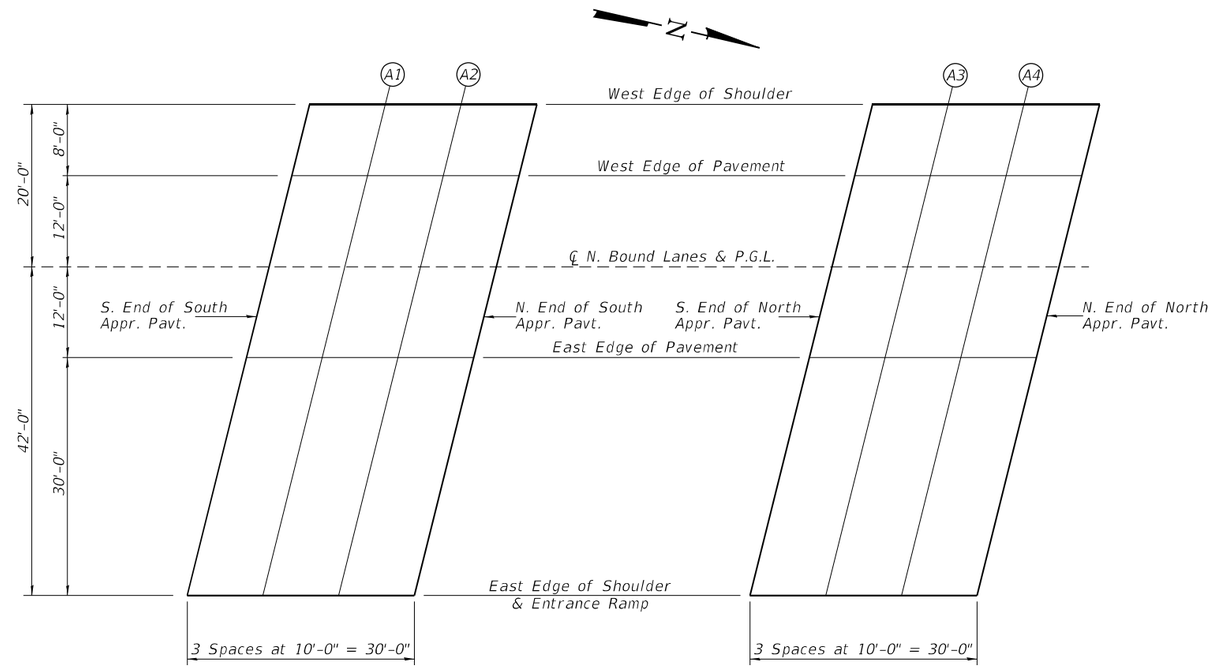

SOUTH APPROACH

NORTH APPROACH

PLAN
(S.N. 041-0115)

WEST EDGE OF SHOULDER

LOCATION	STATION	OFFSET	THEOR. GRADE ELEV.	THEOR. GRADE EL. ADJ. FOR GRINDING
S. End of N. Appr.	1240+49.60	-20.000	577.52	577.54
A3	1240+59.60	-20.000	577.74	577.76
A4	1240+69.60	-20.000	577.97	577.99
N. End of N. Appr.	1240+79.60	-20.000	578.19	578.21

WEST EDGE OF PAVEMENT

LOCATION	STATION	OFFSET	THEOR. GRADE ELEV.	THEOR. GRADE EL. ADJ. FOR GRINDING
S. End of N. Appr.	1240+47.60	-12.000	577.63	577.65
A3	1240+57.60	-12.000	577.86	577.88
A4	1240+67.60	-12.000	578.08	578.10
N. End of N. Appr.	1240+77.60	-12.000	578.31	578.33

℄ N. BOUND LANES & P.G.L.

LOCATION	STATION	OFFSET	THEOR. GRADE ELEV.	THEOR. GRADE EL. ADJ. FOR GRINDING
S. End of N. Appr.	1240+44.61	0.000	577.75	577.77
A3	1240+54.61	0.000	577.97	577.99
A4	1240+64.61	0.000	578.20	578.22
N. End of N. Appr.	1240+74.61	0.000	578.42	578.44

EAST EDGE OF PAVEMENT

LOCATION	STATION	OFFSET	THEOR. GRADE ELEV.	THEOR. GRADE EL. ADJ. FOR GRINDING
S. End of N. Appr.	1240+41.62	12.000	577.63	577.65
A3	1240+51.62	12.000	577.86	577.88
A4	1240+61.62	12.000	578.08	578.10
N. End of N. Appr.	1240+71.62	12.000	578.31	578.33

EAST EDGE OF SHOULDER & ENTRANCE RAMP

LOCATION	STATION	OFFSET	THEOR. GRADE ELEV.	THEOR. GRADE EL. ADJ. FOR GRINDING
S. End of N. Appr.	1240+34.14	42.000	577.20	577.22
A3	1240+44.14	42.000	577.43	577.45
A4	1240+54.14	42.000	577.65	577.67
N. End of N. Appr.	1240+64.14	42.000	577.88	577.90

WEST EDGE OF SHOULDER & EXIT RAMP

LOCATION	STATION	OFFSET	THEOR. GRADE ELEV.	THEOR. GRADE EL. ADJ. FOR GRINDING
S. End of S. Appr.	1238+99.91	-37.730	573.94	573.96
A5	1239+09.52	-37.209	574.19	574.21
A6	1239+19.26	-36.689	574.43	574.45
N. End of S. Appr.	1239+29.13	-36.167	574.66	574.68

WEST EDGE OF PAVEMENT

LOCATION	STATION	OFFSET	THEOR. GRADE ELEV.	THEOR. GRADE EL. ADJ. FOR GRINDING
S. End of S. Appr.	1238+93.10	-12.000	574.34	574.36
A5	1239+03.10	-12.000	574.56	574.58
A6	1239+13.10	-12.000	574.79	574.81
N. End of S. Appr.	1239+23.10	-12.000	575.01	575.03

℄ S. BOUND LANES & P.G.L.

LOCATION	STATION	OFFSET	THEOR. GRADE ELEV.	THEOR. GRADE EL. ADJ. FOR GRINDING
S. End of S. Appr.	1238+90.11	0.000	574.45	574.47
A5	1239+00.11	0.000	574.67	574.69
A6	1239+10.11	0.000	574.90	574.92
N. End of S. Appr.	1239+20.11	0.000	575.12	575.14

EAST EDGE OF PAVEMENT

LOCATION	STATION	OFFSET	THEOR. GRADE ELEV.	THEOR. GRADE EL. ADJ. FOR GRINDING
S. End of S. Appr.	1238+87.12	12.000	574.34	574.36
A5	1238+97.12	12.000	574.56	574.58
A6	1239+07.12	12.000	574.79	574.81
N. End of S. Appr.	1239+17.12	12.000	575.01	575.03

EAST EDGE OF SHOULDER

LOCATION	STATION	OFFSET	THEOR. GRADE ELEV.	THEOR. GRADE EL. ADJ. FOR GRINDING
S. End of S. Appr.	1238+85.12	20.000	574.22	574.24
A5	1238+95.12	20.000	574.45	574.47
A6	1239+05.12	20.000	574.67	574.69
N. End of S. Appr.	1239+15.12	20.000	574.90	574.92

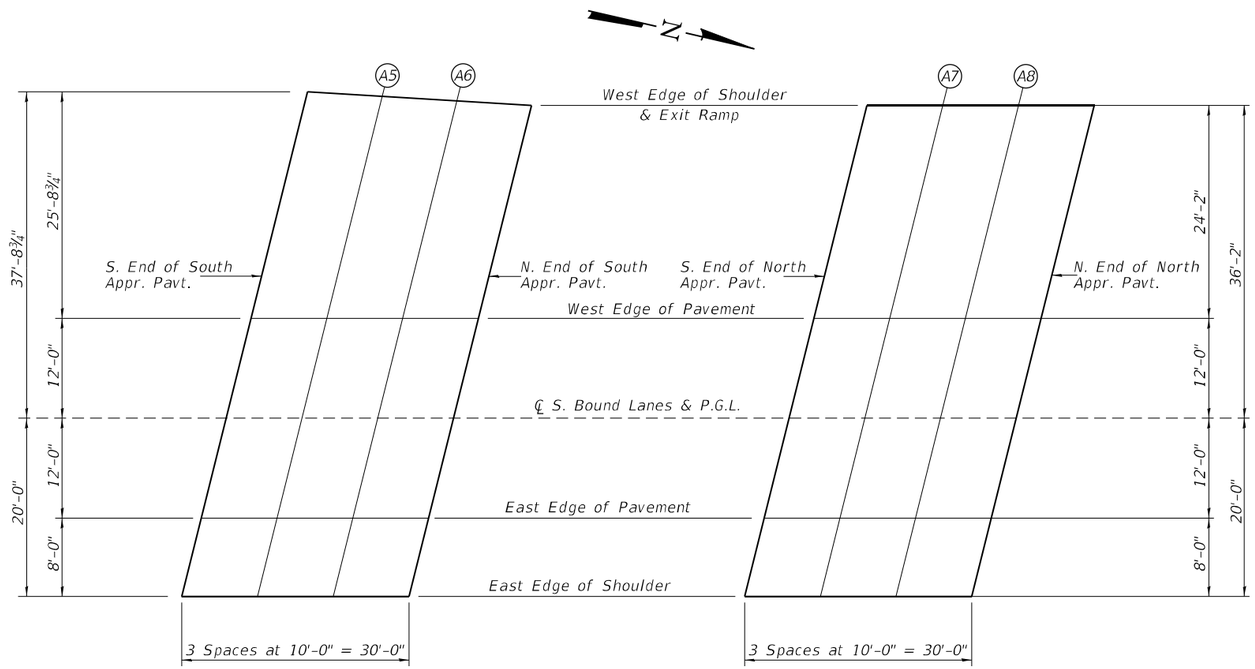

SOUTH APPROACH

NORTH APPROACH

PLAN
(S.N. 041-0116)

WEST EDGE OF SHOULDER & EXIT RAMP

LOCATION	STATION	OFFSET	THEOR. GRADE ELEV.	THEOR. GRADE EL. ADJ. FOR GRINDING
S. End of N. Appr.	1240+77.07	-36.167	577.99	578.01
A7	1240+87.07	-36.167	578.21	578.23
A8	1240+97.07	-36.167	578.44	578.46
N. End of N. Appr.	1241+07.07	-36.167	578.66	578.68

WEST EDGE OF PAVEMENT

LOCATION	STATION	OFFSET	THEOR. GRADE ELEV.	THEOR. GRADE EL. ADJ. FOR GRINDING
S. End of N. Appr.	1240+71.04	-12.000	578.33	578.35
A7	1240+81.04	-12.000	578.56	578.58
A8	1240+91.04	-12.000	578.78	578.80
N. End of N. Appr.	1241+01.04	-12.000	579.01	579.03

℄ S. BOUND LANES & P.G.L.

LOCATION	STATION	OFFSET	THEOR. GRADE ELEV.	THEOR. GRADE EL. ADJ. FOR GRINDING
S. End of N. Appr.	1240+68.05	0.000	578.45	578.47
A7	1240+78.05	0.000	578.67	578.69
A8	1240+88.05	0.000	578.90	578.92
N. End of N. Appr.	1240+98.05	0.000	579.12	579.14

EAST EDGE OF PAVEMENT

LOCATION	STATION	OFFSET	THEOR. GRADE ELEV.	THEOR. GRADE EL. ADJ. FOR GRINDING
S. End of N. Appr.	1240+65.06	12.000	578.33	578.35
A7	1240+75.06	12.000	578.56	578.58
A8	1240+85.06	12.000	578.78	578.80
N. End of N. Appr.	1240+95.06	12.000	579.01	579.03

EAST EDGE OF SHOULDER

LOCATION	STATION	OFFSET	THEOR. GRADE ELEV.	THEOR. GRADE EL. ADJ. FOR GRINDING
S. End of N. Appr.	1240+63.06	20.000	578.22	578.24
A7	1240+73.06	20.000	578.44	578.46
A8	1240+83.06	20.000	578.67	578.69
N. End of N. Appr.	1240+93.06	20.000	578.89	578.91

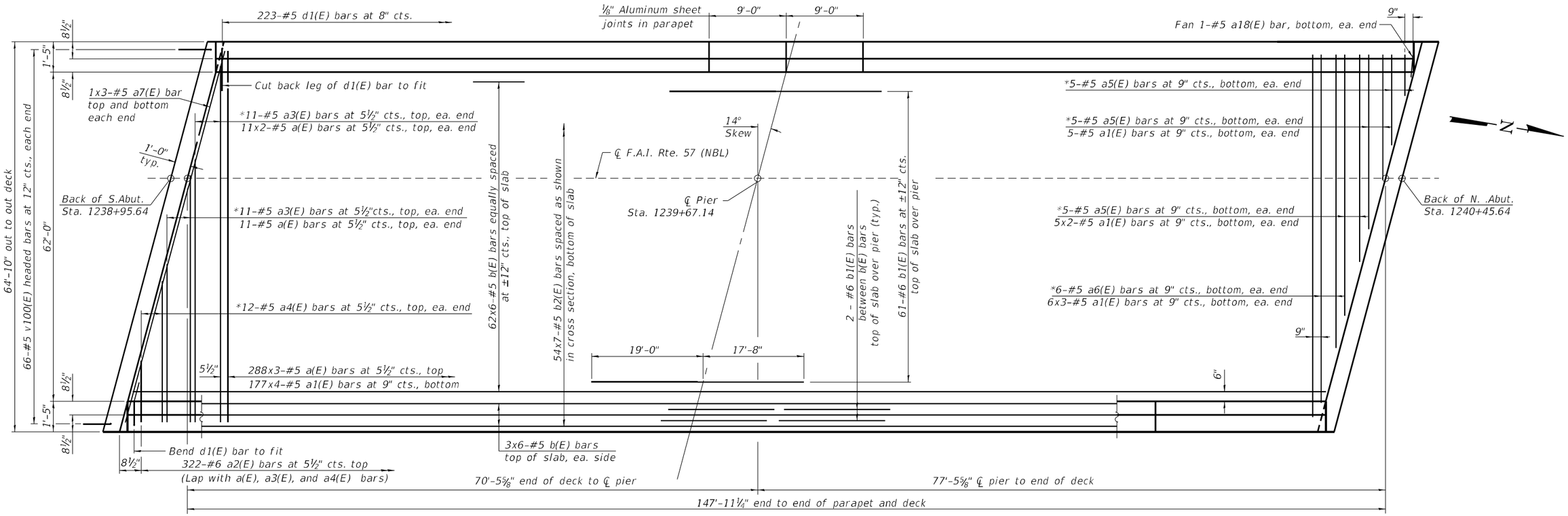

PLAN

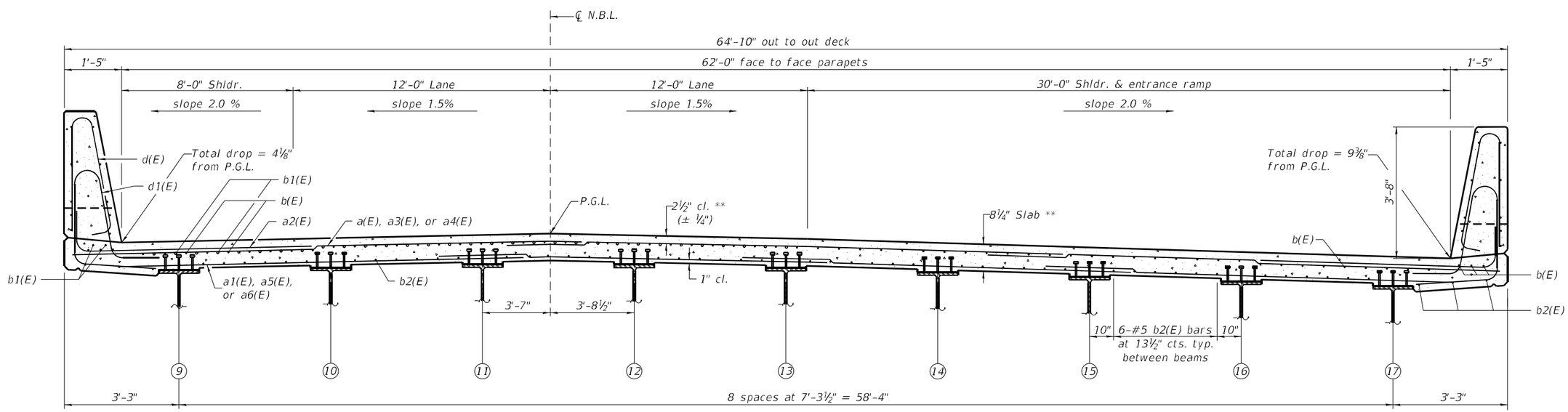

NEAR PIER

NEAR MIDSPAN

CROSS SECTION

(Looking North)

** Prior to grinding

MINIMUM BAR LAP

#5 bar = 3'-6"

* See Field Cutting Diagram on sheet 12 of 37.

Notes:

See sheet 12 of 37 for superstructure details and Bill of Material.

Bars indicated thus 20 x 3-#5 etc. indicates 20 lines of bars with 3 lengths per line.

CMT	USER NAME = Derek Cochran	DESIGNED - AI	REVISED -	STATE OF ILLINOIS DEPARTMENT OF TRANSPORTATION	SUPERSTRUCTURE (NB) STRUCTURE NO. 041-0115 (NB)	F.A.I. RTE.	SECTION	COUNTY	TOTAL SHEETS	SHEET NO.
		CHECKED -	REVISED -			57	(41-4)B-2	JEFFERSON	257	113
	PLOT SCALE = N/A	DRAWN - GLD	REVISED -					CONTRACT NO. 78550		
	PLOT DATE = 3/5/2021 (8:04:57 AM)	CHECKED -	REVISED -		SHEET 11 OF 37 SHEETS		ILLINOIS	FED. AID PROJECT		

License No. 184-000613

MODEL: Default
FILE NAME: L:\IDOT\1900610\WQ_6\Draw\Structure\000-Superstructure NB (0414-0115).dgn

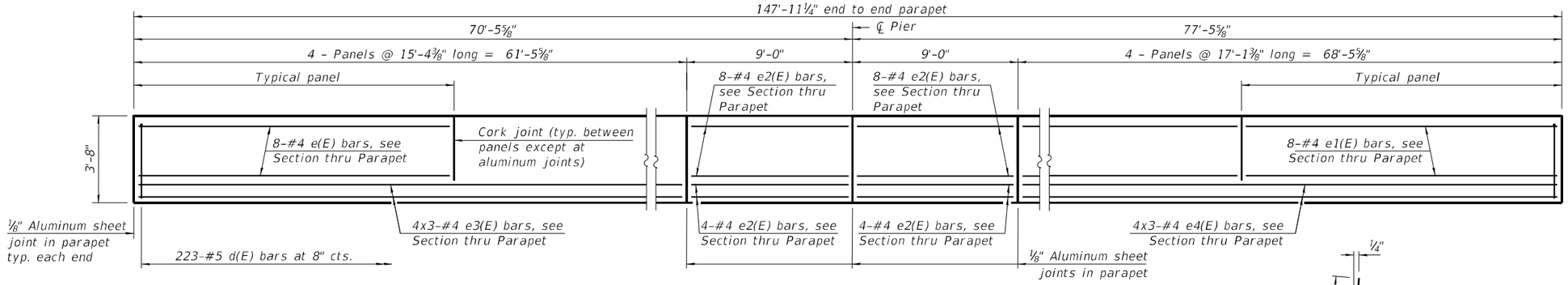

INSIDE ELEVATION OF PARAPET

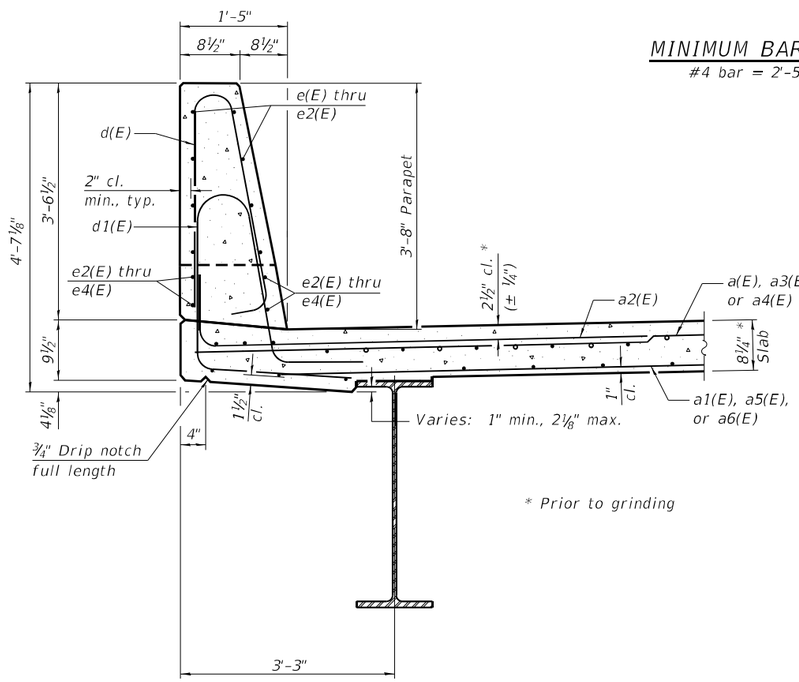

* Prior to grinding

SECTION THRU PARAPET

MINIMUM BAR LAP

#4 bar = 2'-5"

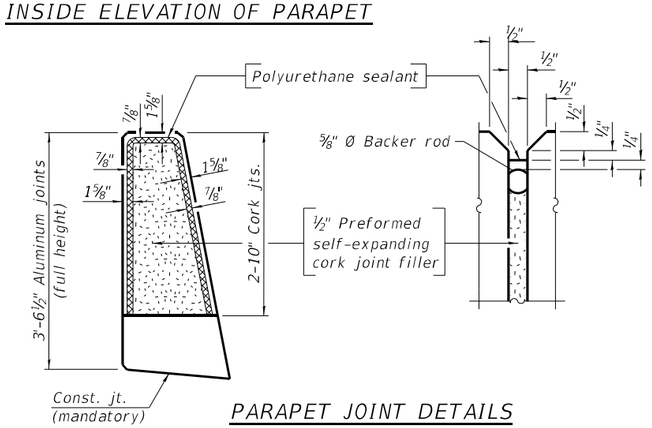

PARAPET JOINT DETAILS

Notes:

The ⅛" aluminum sheet shall be ASTM B 209 alloy 3003-H14 and coated to minimize reaction with wet concrete. Cost included with Concrete Superstructure.

The polyurethane sealant shall be according to Article 1050.04 of the Std. Spec. and the color shall be gray.

Headed bars shall conform to ASTM A970 with threaded attachment; Class HA; and reinforcement bars conforming to ASTM A706. Cost included with Reinforcement Bars, Epoxy Coated.

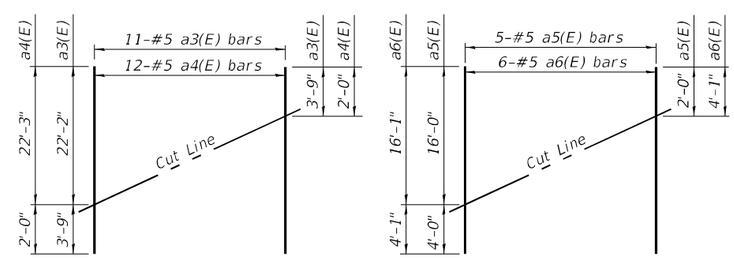

FIELD CUTTING DIAGRAMS

Order a3(E), a4(E), a5(E), and a6(E) bars full length. Cut as shown and use remainder of bars in opposite end of deck.

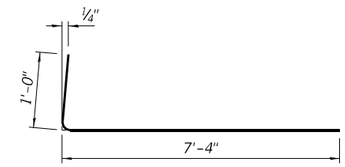

BAR a2(E)

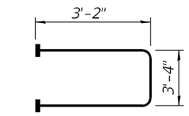

BAR s10(E)

(Headed)

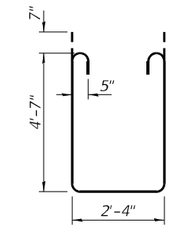

BAR s11(E)

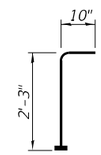

BAR v100(E)

(Headed)

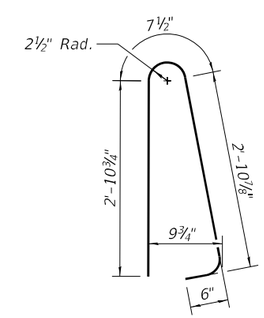

BAR d(E)

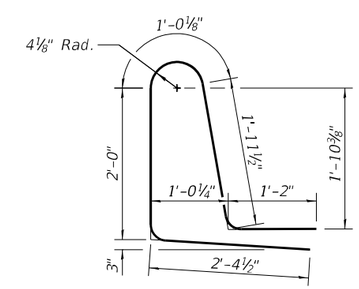

BAR d1(E)

N.B. SUPERSTRUCTURE BILL OF MATERIAL

Bar	No.	Size	Length	Shape
a(E)	930	#5	23'-10"	
a1(E)	774	#5	18'-6"	
a2(E)	644	#6	8'-4"	
a3(E)	22	#5	25'-11"	
a4(E)	12	#5	24'-3"	
a5(E)	15	#5	20'-0"	
a6(E)	6	#5	20'-2"	
a7(E)	12	#5	24'-6"	
a18(E)	2	#5	2'-0"	
b(E)	408	#5	27'-7"	
b1(E)	65	#6	36'-8"	
b2(E)	378	#5	24'-2"	
d(E)	446	#5	6'-11"	
d1(E)	446	#5	8'-6"	
e(E)	64	#4	15'-0"	
e1(E)	64	#4	16'-9"	
e2(E)	48	#4	8'-8"	
e3(E)	24	#4	22'-0"	
e4(E)	24	#4	24'-4"	
m10(E)	24	#6	24'-7"	
m11(E)	48	#6	7'-2"	
m12(E)	12	#6	3'-0"	
s10(E)	124	#5	9'-8"	
s11(E)	124	#5	12'-8"	
v100(E)	132	#5	3'-1"	
Concrete Superstructure			Cu. Yd.	356.1
Protective Coat			Sq. Yd.	1165
Reinforcement Bars, Epoxy Coated			Pound	86930
Bridge Deck Grooving (Longitudinal)			Sq. Yd.	395
Diamond Grinding (Bridge Section)			Sq. Yd.	953

Bars indicated thus 1 x 2-#4 etc. indicates 1 line of bars with 2 lengths per line.

SDI-SB-2 6-15-2019

MODEL: Default
FILE NAME: L:\DOT\190610\WQ_6\Draw\Structures\910-Superstructure dtls NB (041-0115).dgn

CMT
License No. 184-000613 © Copyright CMT, Inc.

USER NAME = Derek Cochran	DESIGNED - AI	REVISED -	
	CHECKED -	REVISED -	
PLOT SCALE = N/A	DRAWN - GLD	REVISED -	
PLOT DATE = 3/5/2021 (8:04:58 AM)	CHECKED -	REVISED -	

STATE OF ILLINOIS
DEPARTMENT OF TRANSPORTATION

SUPERSTRUCTURE DETAILS (NB)
STRUCTURE NO. 041-0115 (NB)

SHEET 12 OF 37 SHEETS

F.A.I. RTE.	SECTION	COUNTY	TOTAL SHEETS	SHEET NO.
57	(41-4)B-2	JEFFERSON	257	114
		CONTRACT NO. 78550		
		ILLINOIS	FED. AID PROJECT	

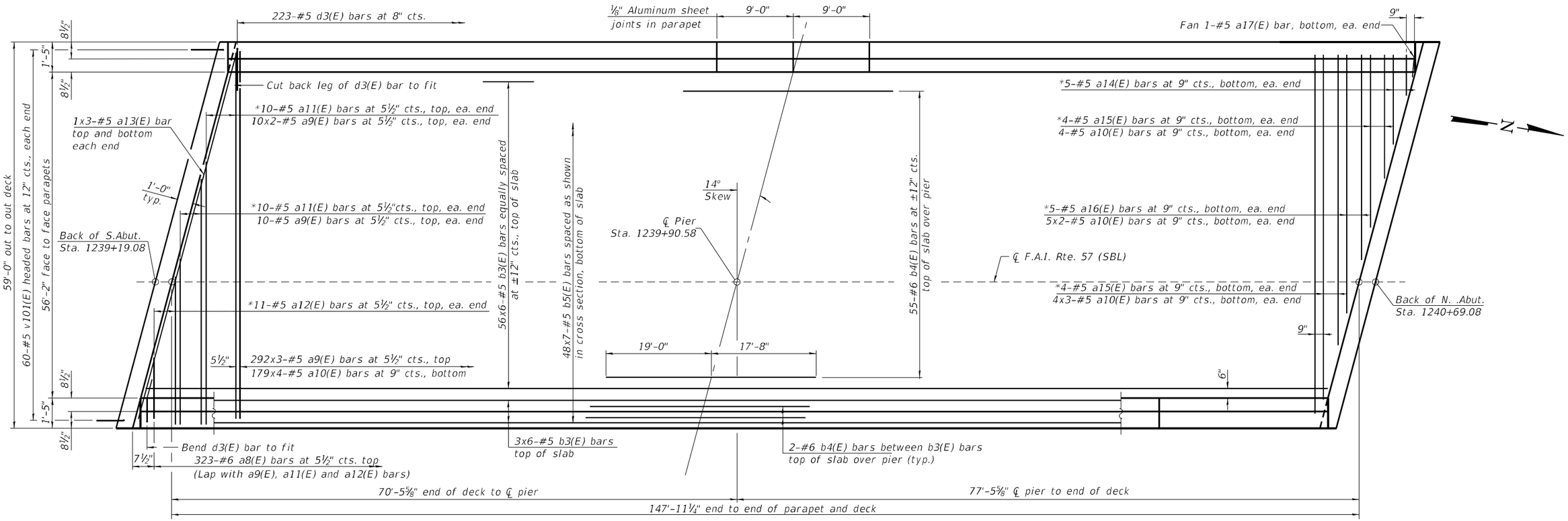

PLAN

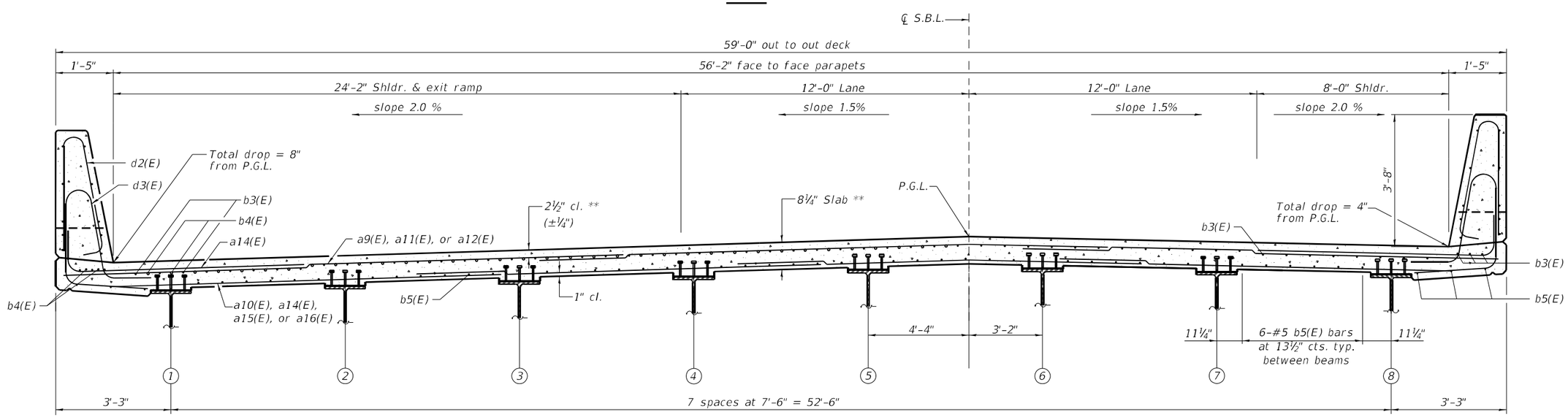

MINIMUM BAR LAP

#5 bar = 3'-6"

* See Field Cutting Diagram on sheet 14 of 37.

NEAR PIER

** Prior to grinding

NEAR MIDSPAN

CROSS SECTION

(Looking North)

Notes:

See sheet 14 of 37 for superstructure details and Bill of Material.

Bars indicated thus 20 x 3-#5 etc. indicates 20 lines of bars with 3 lengths per line.

MODEL: Default
FILE NAME: L:\IDOT\1950610\WO_8\Drawl\Structures\011-Superstructure SB (041-0116).dgn

CMT
License No. 184-000613

USER NAME = Derek Cochran	DESIGNED - AI	REVISED -	
	CHECKED -	REVISED -	
PLOT SCALE = N/A	DRAWN - GLD	REVISED -	
PLOT DATE = 3/5/2021 (8:05:00 AM)	CHECKED -	REVISED -	

STATE OF ILLINOIS
DEPARTMENT OF TRANSPORTATION

SUPERSTRUCTURE (SB)
STRUCTURE NO. 041-0116 (SB)

SHEET 13 OF 37 SHEETS

F.A.I. RTE.	SECTION	COUNTY	TOTAL SHEETS	SHEET NO.
57	(41-4)B-2	JEFFERSON	257	115
		CONTRACT NO. 78550		
	ILLINOIS	FED. AID PROJECT		

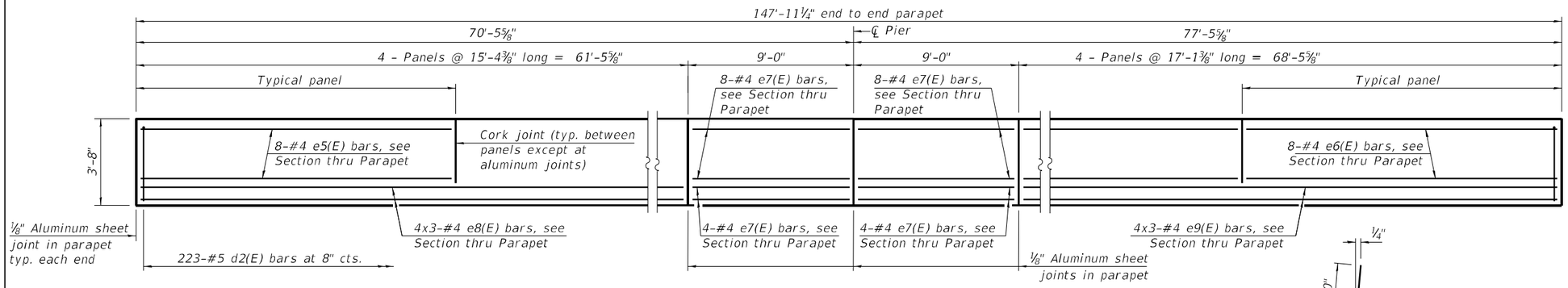

INSIDE ELEVATION OF PARAPET

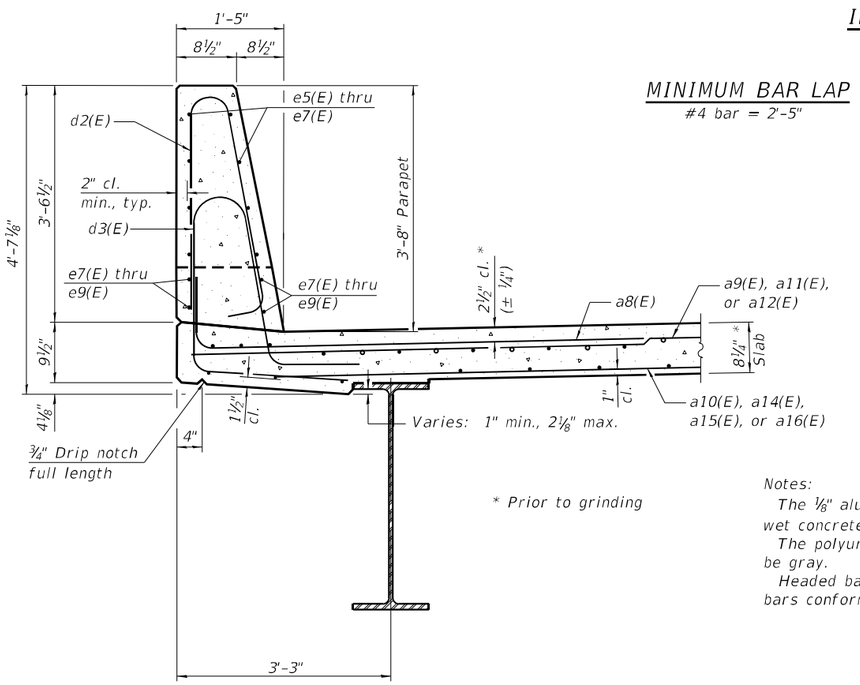

* Prior to grinding

SECTION THRU PARAPET

MINIMUM BAR LAP

#4 bar = 2'-5"

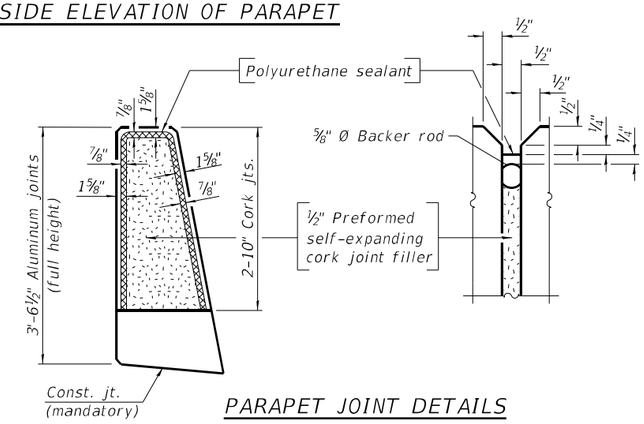

PARAPET JOINT DETAILS

Notes:

The ⅛" aluminum sheet shall be ASTM B 209 alloy 3003-H14 and coated to minimize reaction with wet concrete. Cost included with Concrete Superstructure.

The polyurethane sealant shall be according to Article 1050.04 of the Std. Spec. and the color shall be gray.

Headed bars shall conform to ASTM A970 with threaded attachment; Class HA; and reinforcement bars conforming to ASTM A706. Cost included with Reinforcement Bars, Epoxy Coated.

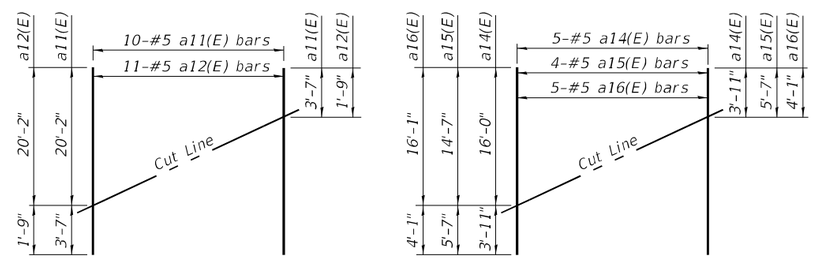

FIELD CUTTING DIAGRAMS

Order a11(E), a12(E), a14(E), a15(E), and a16(E) bars full length. Cut as shown and use remainder of bars in opposite end of deck.

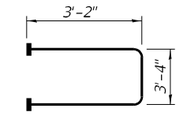

BAR s12(E)

(Headed)

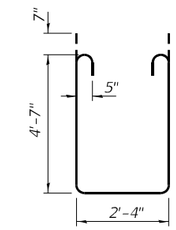

BAR s13(E)

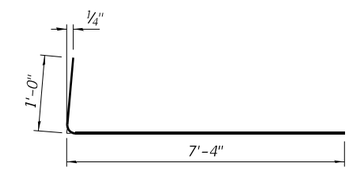

BAR a8(E)

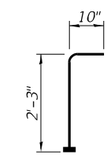

BAR v101(E)

(Headed)

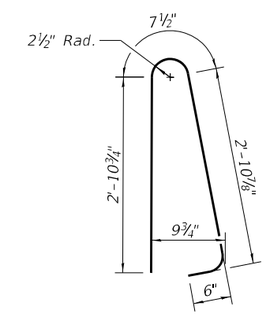

BAR d2(E)

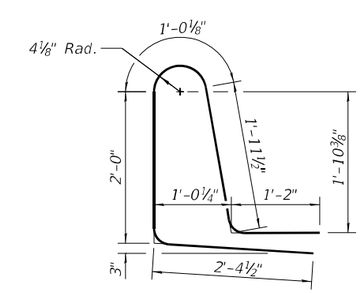

BAR d3(E)

S.B. SUPERSTRUCTURE BILL OF MATERIAL

Bar	No.	Size	Length	Shape
a8(E)	646	#6	8'-4"	
a9(E)	936	#5	21'-11"	
a10(E)	768	#5	17'-0"	
a11(E)	20	#5	23'-9"	
a12(E)	11	#5	21'-11"	
a13(E)	12	#5	22'-6"	
a14(E)	5	#5	19'-11"	
a15(E)	8	#5	20'-2"	
a16(E)	5	#5	20'-2"	
a17(E)	2	#5	2'-0"	
b3(E)	372	#5	27'-7"	
b4(E)	59	#6	36'-8"	
b5(E)	336	#5	24'-2"	
d2(E)	446	#5	7'-0"	
d3(E)	446	#5	8'-7"	
e5(E)	64	#4	15'-0"	
e6(E)	64	#4	16'-9"	
e7(E)	48	#4	8'-8"	
e8(E)	24	#4	22'-0"	
e9(E)	24	#4	24'-4"	
m13(E)	24	#6	22'-7"	
m14(E)	42	#6	7'-4"	
m15(E)	12	#6	3'-0"	
s12(E)	110	#5	9'-8"	
s13(E)	110	#5	12'-8"	
v101(E)	120	#5	3'-1"	
Concrete Superstructure		Cu. Yd.	327.7	
Protective Coat		Sq. Yd.	1069	
Reinforcement Bars, Epoxy Coated		Pound	80840	
Bridge Deck Grooving (Longitudinal)		Sq. Yd.	395	
Diamond Grinding (Bridge Section)		Sq. Yd.	858	

Bars indicated thus 1 x 2-#4 etc. indicates 1 line of bars with 2 lengths per line.

SDI-SB-2 6-15-2019

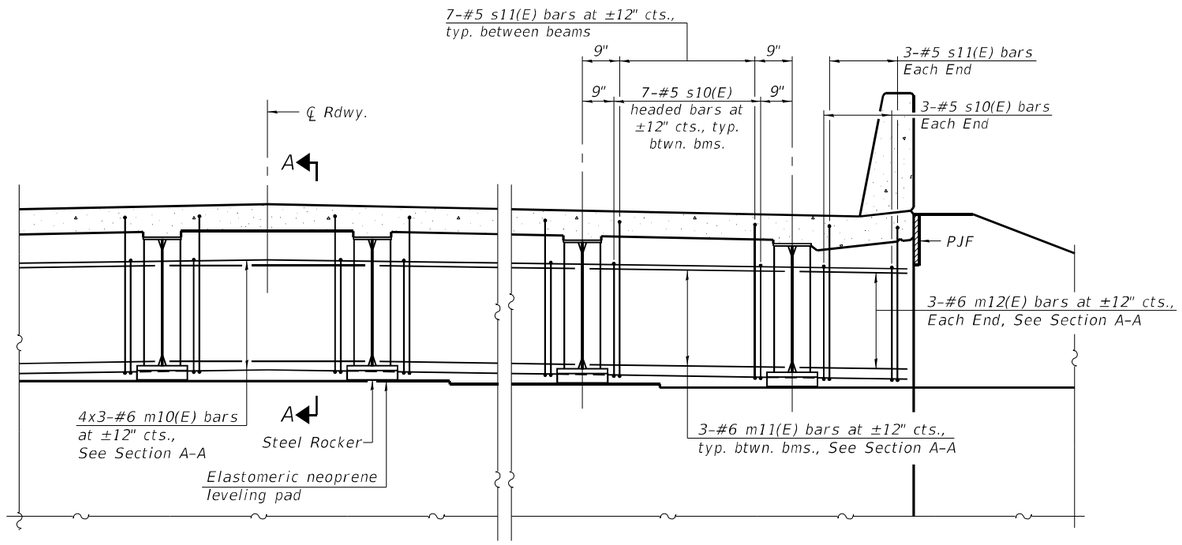

DIAPHRAGM AT ABUTMENT

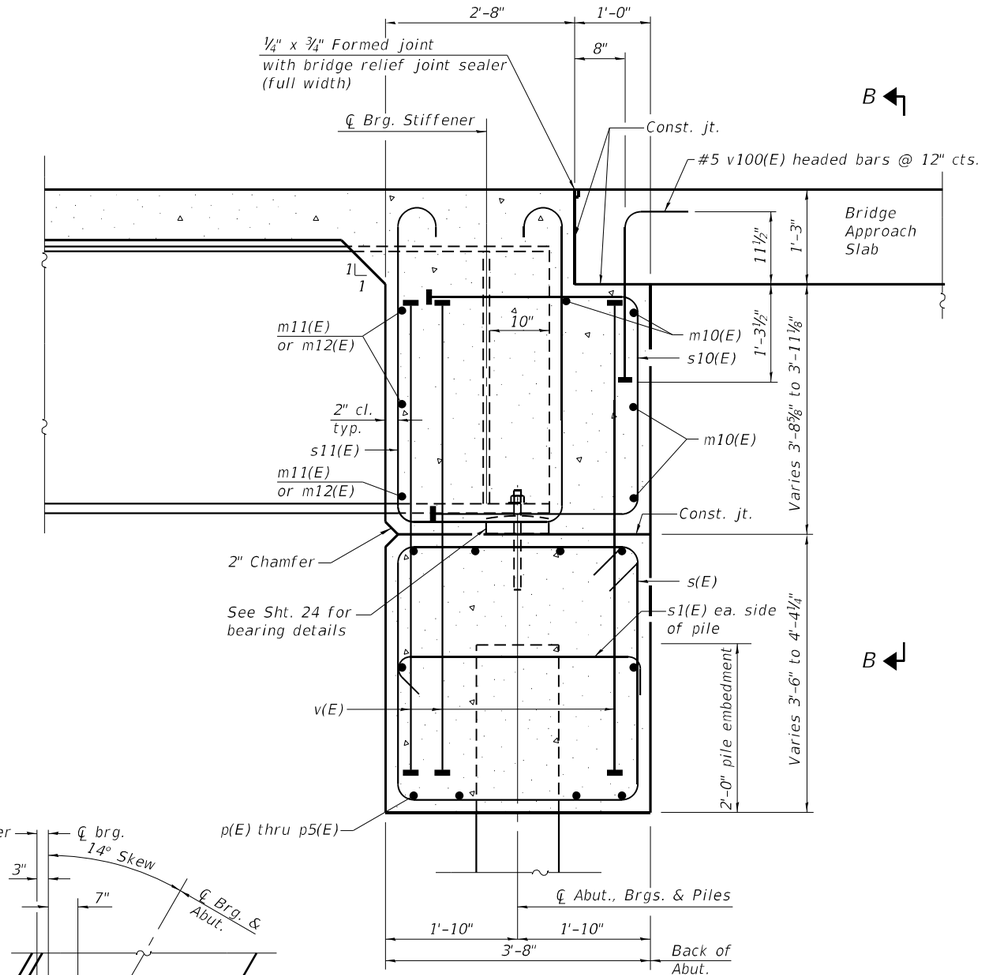

SECTION A-A
(at Rt. ℄'s)

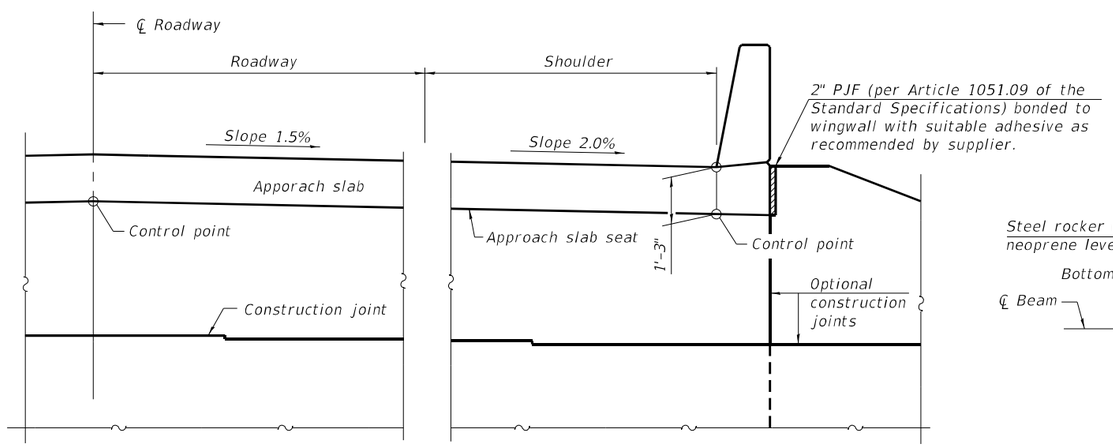

VIEW B-B

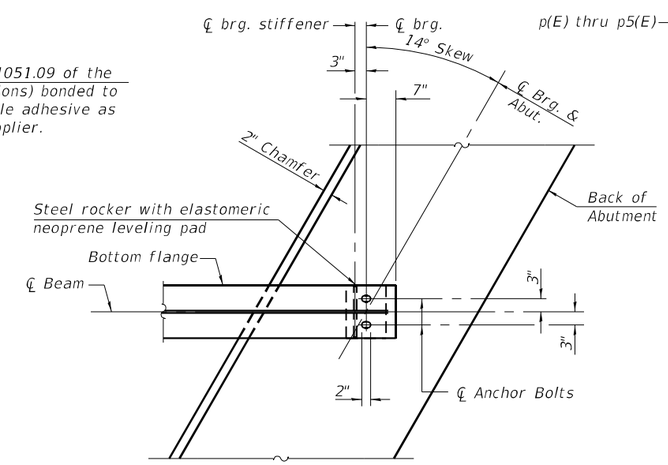

PLAN AT ABUTMENT
(Showing bottom flange of beam)

Notes:
See sheet 12 of 37 for superstructure details and Bill of Material.
The s10(E) and s11(E) bars shall be placed parallel to the beams. Spacing for these bars shall be at right angles to the beams.
The approach slab seat shall have a constant slope determined from the control points shown.

MIN. BAR LAP
#6(E) Bar = 4'-0"

MODEL: Default
FILE NAME: L:\DOT\190610\WG_6\Draw\Structure\91-3-Diaphragm Details 041-0115 (NB).dgn

CMT License No. 184-000613 © Copyright CMT, Inc.	USER NAME = Derek Cochran	DESIGNED - AI	REVISED -	STATE OF ILLINOIS DEPARTMENT OF TRANSPORTATION	DIAPHRAGM DETAILS (NB) STRUCTURE NO. 041-0115 (NB)
		CHECKED -	REVISED -		
	PLOT SCALE = N/A	DRAWN - GLD	REVISED -		
	PLOT DATE = 3/5/2021 (8:05:04 AM)	CHECKED -	REVISED -		SHEET 15 OF 37 SHEETS

F.A.I. RTE.	SECTION	COUNTY	TOTAL SHEETS	SHEET NO.
57	(41-4)B-2	JEFFERSON	257	117
		CONTRACT NO. 78550		
		ILLINOIS FED. AID PROJECT		

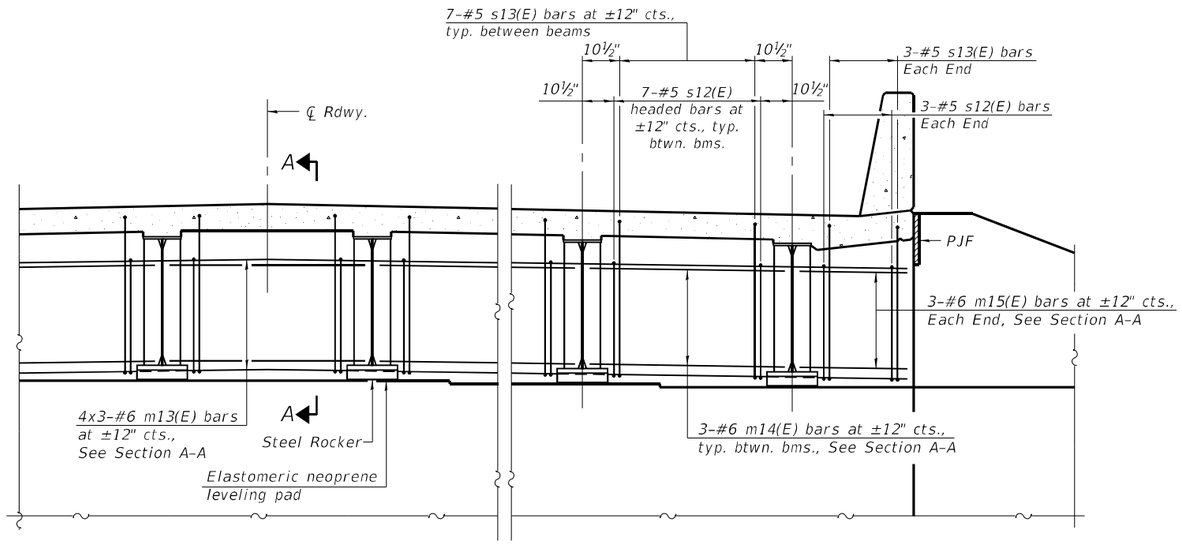

DIAPHRAGM AT ABUTMENT

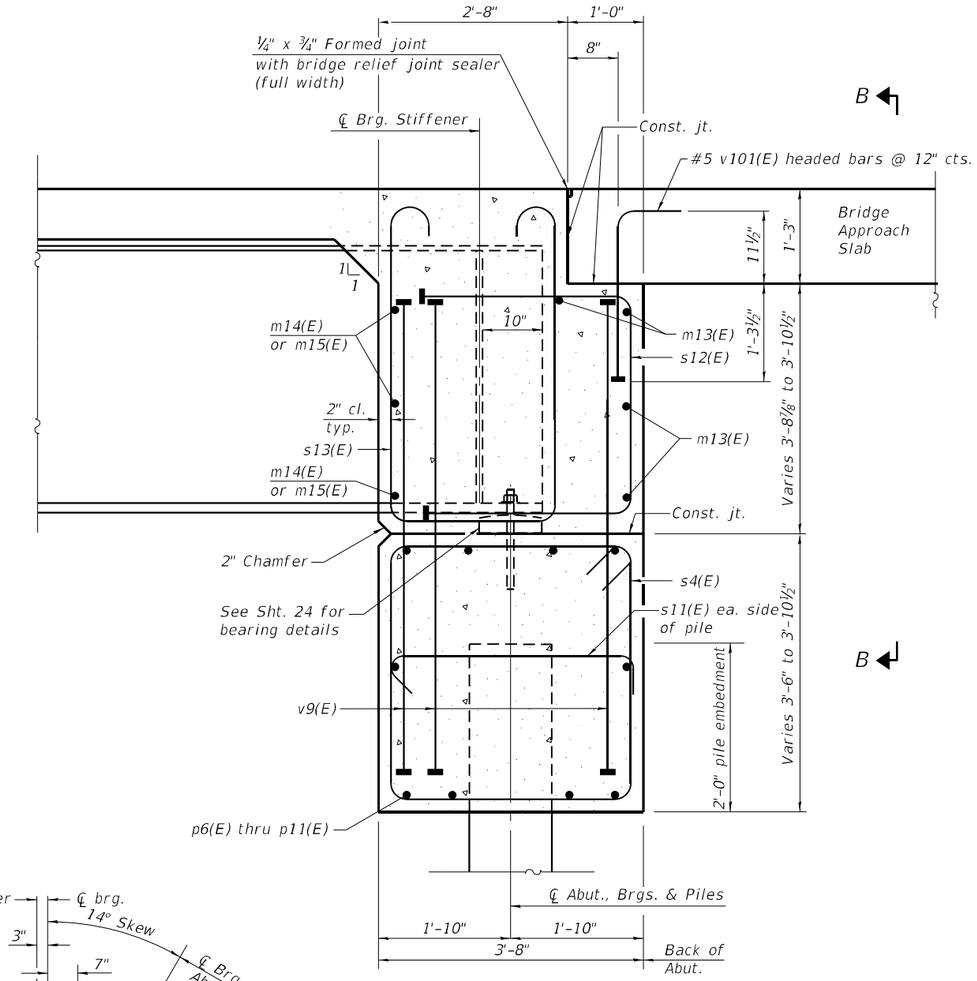

SECTION A-A
(at Rt. ∠'s)

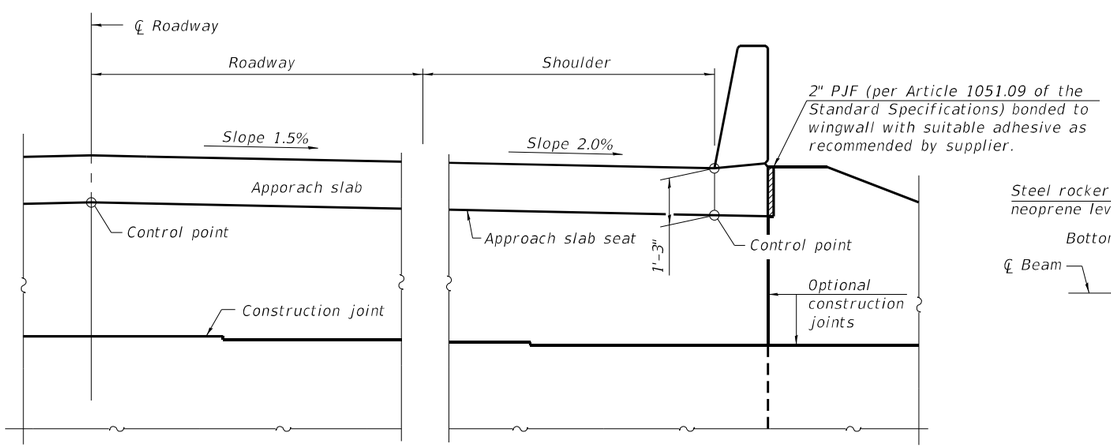

VIEW B-B

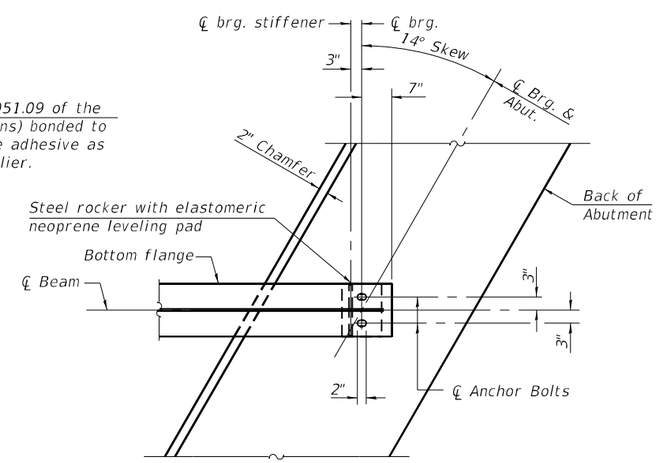

PLAN AT ABUTMENT
(Showing bottom flange of beam)

Notes:
See sheet 14 of 37 for superstructure details and Bill of Material.
The s12(E) and s13(E) bars shall be placed parallel to the beams. Spacing for these bars shall be at right angles to the beams.
The approach slab seat shall have a constant slope determined from the control points shown.

MIN. BAR LAP
#6(E) Bar = 4'-0"

MODEL: Default
FILE NAME: L:\IDOT\190810\WQ_6\Draw\Structures\014-Diaphragm Details (041-0116 (SB).dgn

CMT License No. 184-000613 © Copyright CMT, Inc.	USER NAME = Derek Cochran	DESIGNED - AI	REVISED -	STATE OF ILLINOIS DEPARTMENT OF TRANSPORTATION	DIAPHRAGM DETAILS (SB) STRUCTURE NO. 041-0116 (SB)	F.A.I. RTE.	SECTION	COUNTY	TOTAL SHEETS / SHEET NO.
		CHECKED -	REVISED -			57	(41-4)B-2	JEFFERSON	257 / 118
	PLOT SCALE = N/A	DRAWN - GLD	REVISED -					CONTRACT NO. 78550	
	PLOT DATE = 3/5/2021 (8:05:05 AM)	CHECKED -	REVISED -		SHEET 16 OF 37 SHEETS		ILLINOIS	FED. AID PROJECT	

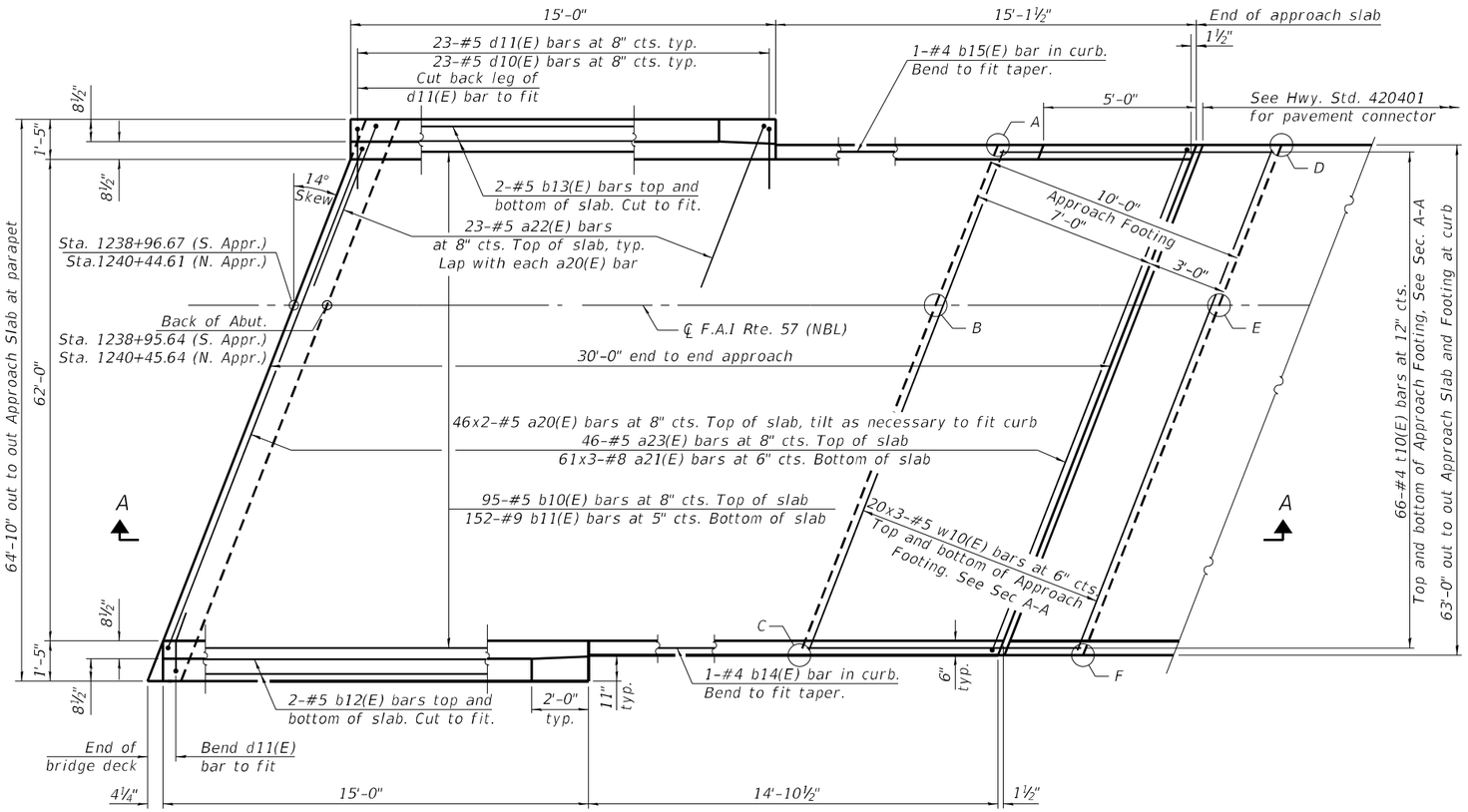

PLAN

(Showing north approach, south approach similar)

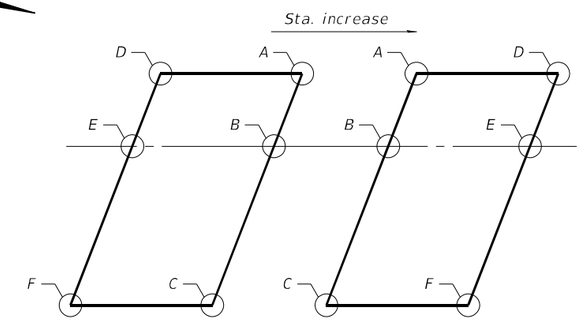

PLAN

TOP AND BOTTOM ELEVATIONS FOR APPROACH FOOTING

	South Approach		North Approach	
Point	Top	Bottom	Top	Bottom
A	572.42	571.59	576.78	575.95
B	572.65	571.82	577.01	576.18
C	572.11	571.28	576.47	575.64
D	572.19	571.36	577.01	576.18
E	572.42	571.59	577.24	576.41
F	571.87	571.04	576.70	575.87

MINIMUM BAR LAP

#5(E) bar = 3'-4"
#8(E) bar = 4'-9"

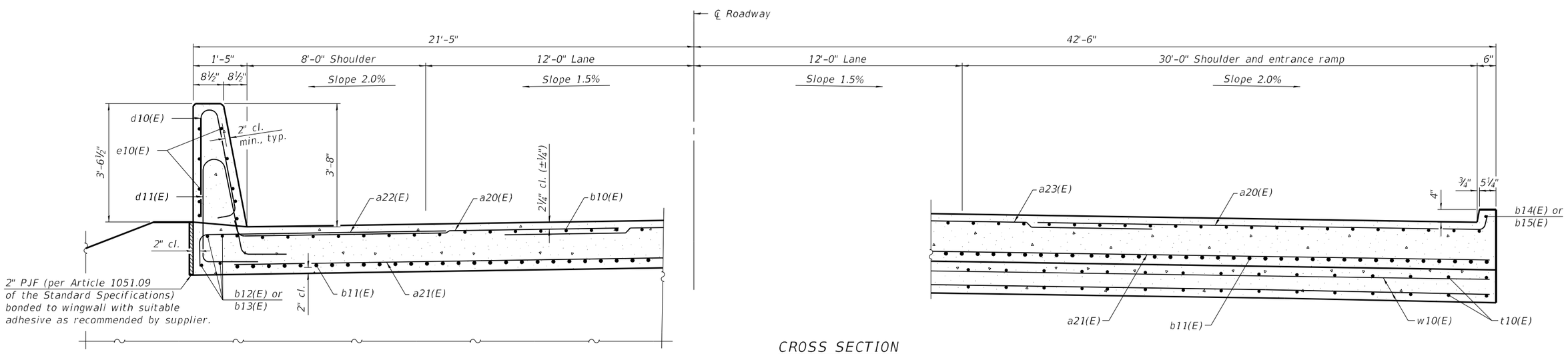

NEAR ABUTMENT

CROSS SECTION

(Looking North)

AT APPROACH FOOTING

(Sheet 1 of 2)

MODEL: Default
FILE NAME: L:\IDOT\190861\0\VKQ_0\Draw\Structures\017-Approach Slab.Dgn

CMT
License No. 184-000613
© Copyright CMT, Inc.

USER NAME = Derek Cochran	DESIGNED - AI	REVISED -	
	CHECKED -	REVISED -	
PLOT SCALE = N/A	DRAWN - GLD	REVISED -	
PLOT DATE = 3/5/2021 (8:05:07 AM)	CHECKED -	REVISED -	

STATE OF ILLINOIS
DEPARTMENT OF TRANSPORTATION

BRIDGE APPROACH SLAB DETAILS 1
STRUCTURE NO. 041-0115 (NB)

SHEET 17 OF 37 SHEETS

F.A.I. RTE.	SECTION	COUNTY	TOTAL SHEETS	SHEET NO.
57	(41-4)B-2	JEFFERSON	257	119
		CONTRACT NO. 78550		
	ILLINOIS	FED. AID PROJECT		

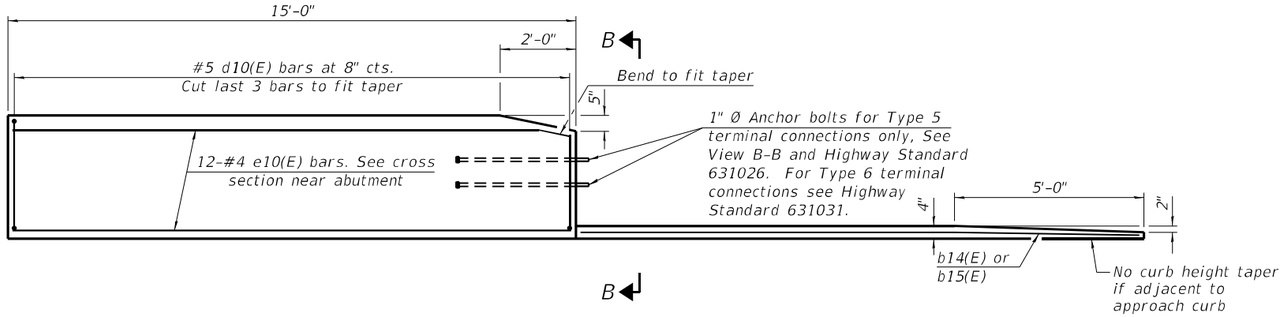

INSIDE ELEVATION OF PARAPET AND CURB

Notes:

The joint opening shall be adjusted for temperature per Article 520.04 of the Standard Specifications. However, since this detail is for jointless structures, the length of bridge used to calculate the adjustment shall be equal to half the total bridge length plus the length of the bridge approach slab.

Parapet concrete shall be paid for as Concrete Superstructure.

Approach slab shall be paid for as Concrete Superstructure (Approach Slab).

Approach footing concrete shall be paid for as Concrete Structures.

The approach footing maximum applied service bearing pressure (Qmax) = 2.0 ksf.

Cost of excavation for approach footing included with Concrete Structures.

For Granular Backfill for Structures and drainage treatment details, see section through abutment on sheet 2 of 37.

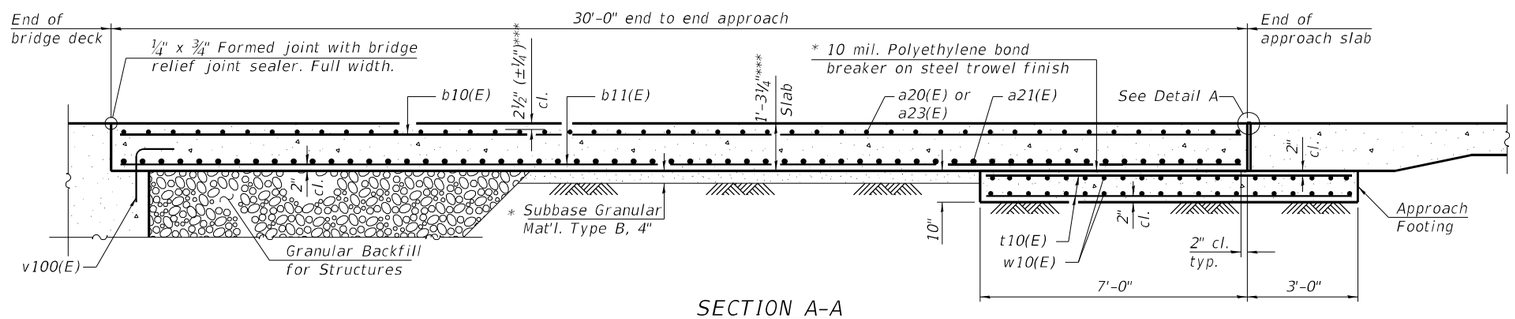

SECTION A-A

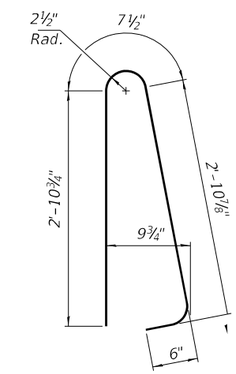

BAR d10(E)

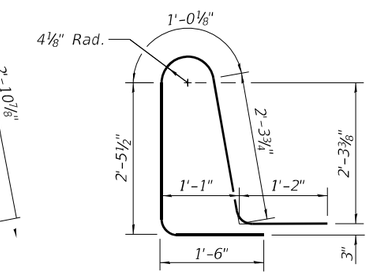

BAR d11(E)

TWO APPROACHES
BILL OF MATERIAL

Bar	No.	Size	Length	Shape
a20(E)	184	#5	24'-5"	
a21(E)	366	#8	24'-4"	
a22(E)	92	#5	7'-4"	
a23(E)	92	#5	23'-11"	
b10(E)	190	#5	29'-8"	
b11(E)	304	#9	29'-8"	
b12(E)	8	#5	15'-0"	
b13(E)	8	#5	14'-6"	
b14(E)	2	#4	14'-7"	
b15(E)	2	#4	14'-9"	
d10(E)	92	#5	7'-0"	
d11(E)	92	#5	8'-6"	
e10(E)	48	#4	14'-8"	
t10(E)	264	#4	9'-11"	
w10(E)	240	#5	23'-11"	
Structure Excavation			Cu. Yd.	41
Concrete Structures			Cu. Yd.	40.1
Concrete Superstructure			Cu. Yd.	8.9
Protective Coat			Sq. Yd.	450
Concrete Superstructure (Approach Slab)			Cu. Yd.	180.6
Reinforcement Bars, Epoxy Coated			Pound	77990
Bridge Deck Grooving (Longitudinal)			Sq. Yd.	160
Diamond Grinding (Bridge Section)			Sq. Yd.	716

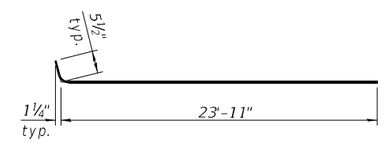

BAR a20(E)

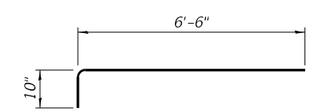

BAR a22(E)

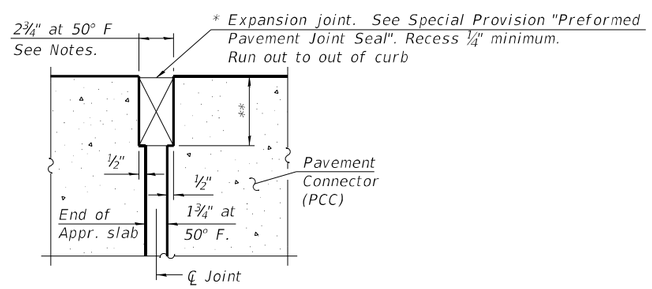

DETAIL A
(@ Rt. ∠'s)

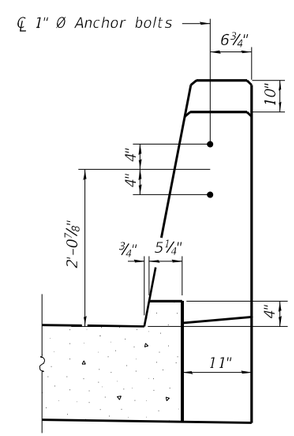

VIEW B-B

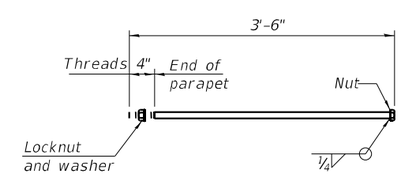

*1" Ø ANCHOR BOLT
(Anchor bolt assemblies shall be galvanized according to Article 1006.09 of the Standard Specifications)

* Cost included with Concrete Superstructure (Approach Slab).

** Per manufacturer recommendations

*** Prior to grinding

(Sheet 2 of 2)

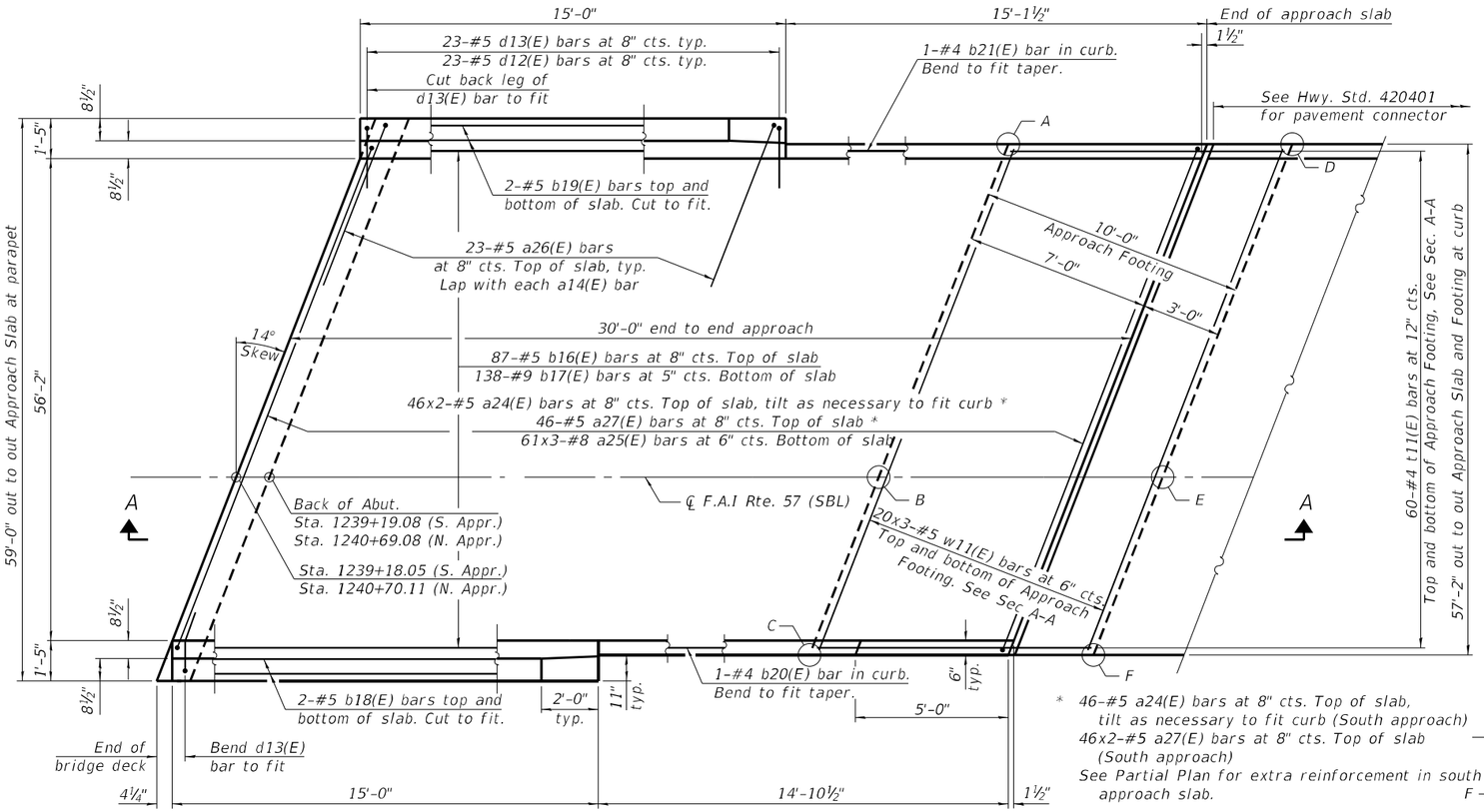

* 46-#5 a24(E) bars at 8" cts. Top of slab, tilt as necessary to fit curb (South approach)
46x2-#5 a27(E) bars at 8" cts. Top of slab (South approach)
See Partial Plan for extra reinforcement in south approach slab.

PLAN

(Showing north approach, south approach similar)

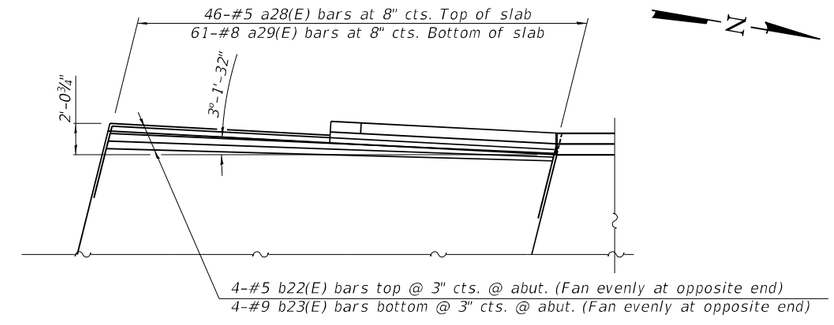

PARTIAL PLAN

(South approach - west end of slab)

MINIMUM BAR LAP

#5(E) bar = 3'-4"
#8(E) bar = 4'-9"

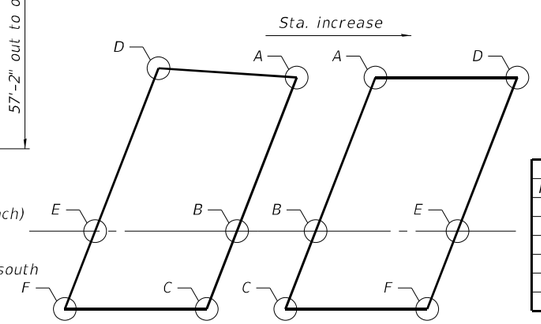

PLAN

TOP AND BOTTOM ELEVATIONS FOR APPROACH FOOTING

	South Approach		North Approach	
Point	Top	Bottom	Top	Bottom
A	572.86	572.03	577.25	576.42
B	573.36	572.53	577.71	576.88
C	573.13	572.30	577.48	576.65
D	572.62	571.79	577.48	576.65
E	573.13	572.30	577.94	577.11
F	572.90	572.07	577.71	576.88

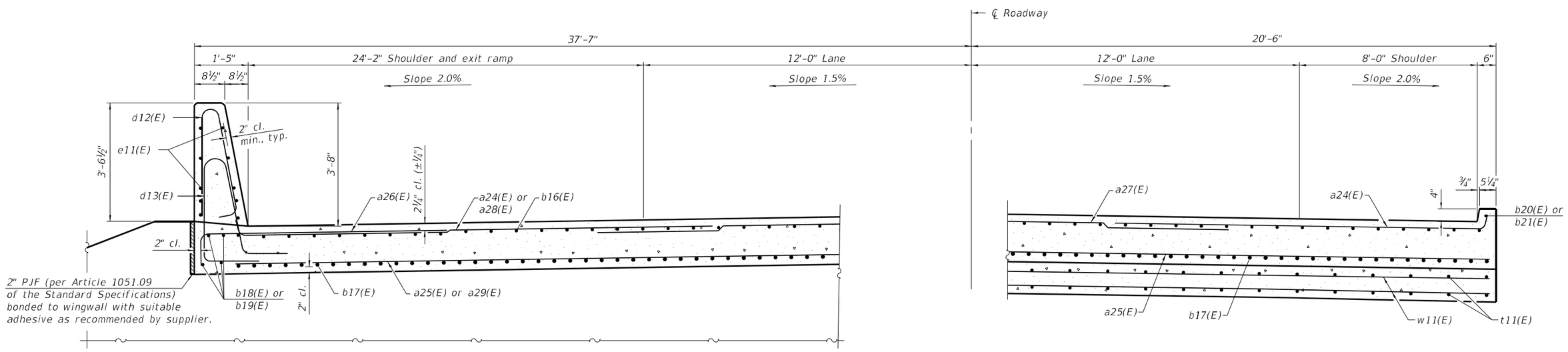

NEAR ABUTMENT

CROSS SECTION

(Looking North)

AT APPROACH FOOTING

(Sheet 1 of 2)

MODEL: Default
FILE NAME: L:\IDOT\1906810\WO_8\Draw\Structures\01b-Approach Slab Dtls 1 SB (041-0116).dgn

CMT
License No. 184-000613
© Copyright CMT, Inc.

USER NAME = Derek Cochran	DESIGNED - AI	REVISED -	
	CHECKED -	REVISED -	
PLOT SCALE = N/A	DRAWN - GLD	REVISED -	
PLOT DATE = 3/5/2021 (8:05:09 AM)	CHECKED -	REVISED -	

STATE OF ILLINOIS
DEPARTMENT OF TRANSPORTATION

BRIDGE APPROACH SLAB DETAILS 1
STRUCTURE NO. 041-0116 (SB)

SHEET 19 OF 37 SHEETS

F.A.I. RTE.	SECTION	COUNTY	TOTAL SHEETS	SHEET NO.
57	(41-4)B-2	JEFFERSON	257	121
		CONTRACT NO. 78550		
	ILLINOIS	FED. AID PROJECT		

Notes:
The joint opening shall be adjusted for temperature per Article 520.04 of the Standard Specifications. However, since this detail is for jointless structures, the length of bridge used to calculate the adjustment shall be equal to half the total bridge length plus the length of the bridge approach slab.
Parapet concrete shall be paid for as Concrete Superstructure.
Approach slab shall be paid for as Concrete Superstructure (Approach Slab).
Approach footing concrete shall be paid for as Concrete Structures.
The approach footing maximum applied service bearing pressure (Qmax) = 2.0 ksf.
Cost of excavation for approach footing included with Concrete Structures.
For Granular Backfill for Structures and drainage treatment details, see section through abutment sheet 2 of 37.

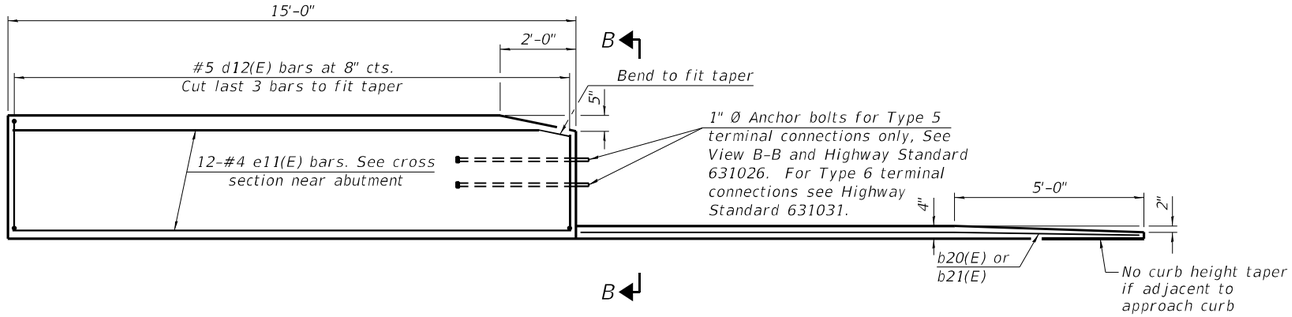

INSIDE ELEVATION OF PARAPET AND CURB

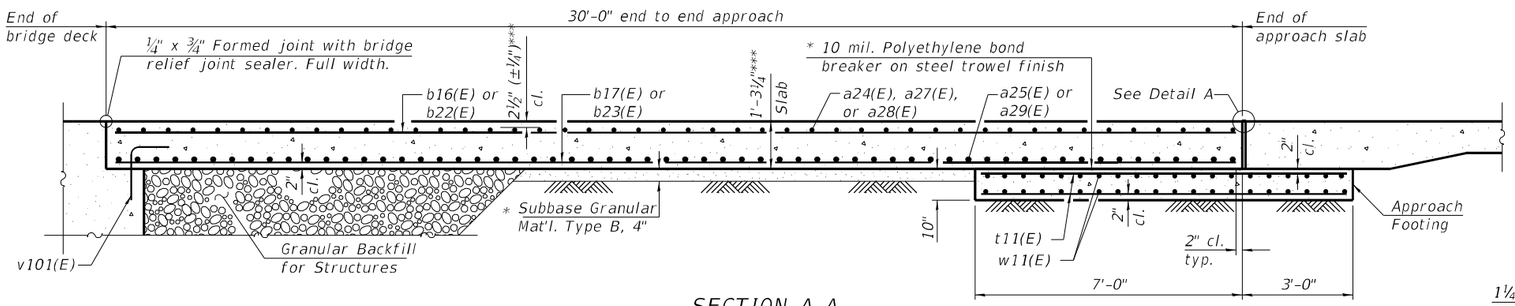

SECTION A-A

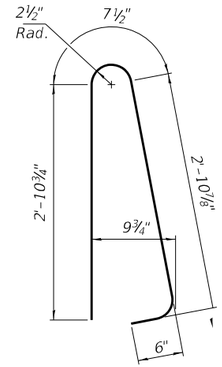

BAR d12(E)

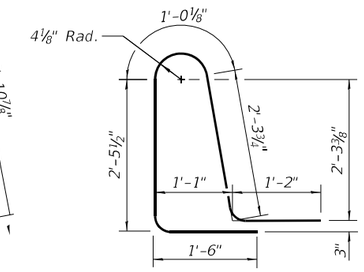

BAR d13(E)

BAR a24(E)

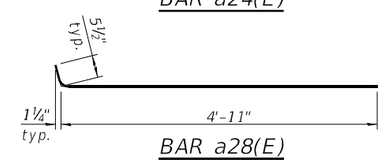

BAR a28(E)

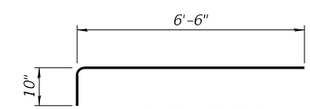

BAR a26(E)

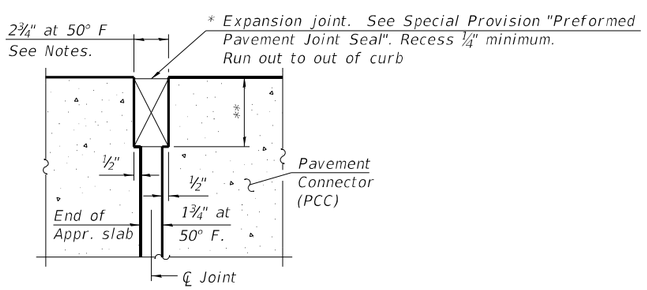

DETAIL A
(@ Rt. ∠'s)

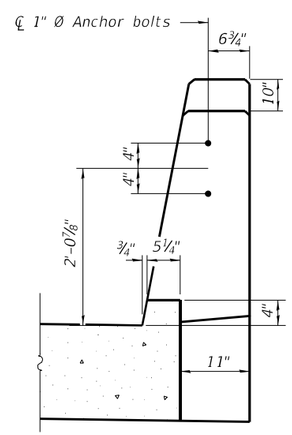

VIEW B-B

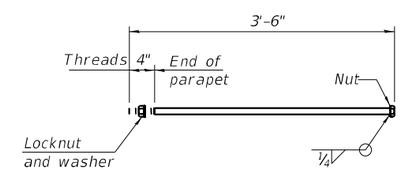

*1" Ø ANCHOR BOLT
(Anchor bolt assemblies shall be galvanized according to Article 1006.09 of the Standard Specifications)

(Sheet 2 of 2)

* Cost included with Concrete Superstructure (Approach Slab).

** Per manufacturer recommendations

*** Prior to grinding

TWO APPROACHES
BILL OF MATERIAL

Bar	No.	Size	Length	Shape
a24(E)	184	#5	22'-7"	
a25(E)	366	#8	22'-3"	
a26(E)	92	#5	7'-4"	
a27(E)	92	#5	22'-1"	
a28(E)	46	#5	5'-5"	
a29(E)	61	#8	6'-2"	
b16(E)	174	#5	29'-8"	
b17(E)	276	#9	29'-8"	
b18(E)	8	#5	15'-0"	
b19(E)	8	#5	14'-6"	
b20(E)	2	#4	14'-7"	
b21(E)	2	#4	14'-9"	
b22(E)	4	#5	29'-5"	
b23(E)	4	#9	29'-5"	
d12(E)	92	#5	7'-0"	
d13(E)	92	#5	8'-6"	
e11(E)	48	#4	14'-8"	
t11(E)	240	#4	9'-11"	
w11(E)	240	#5	22'-1"	
Structure Excavation		Cu. Yd.	37	
Concrete Structures		Cu. Yd.	36.4	
Concrete Superstructure		Cu. Yd.	8.9	
Protective Coat		Sq. Yd.	411	
Concrete Superstructure (Approach Slab)		Cu. Yd.	164.2	
Reinforcement Bars, Epoxy Coated		Pound	73280	
Bridge Deck Grooving (Longitudinal)		Sq. Yd.	160	
Diamond Grinding (Bridge Section)		Sq. Yd.	587	

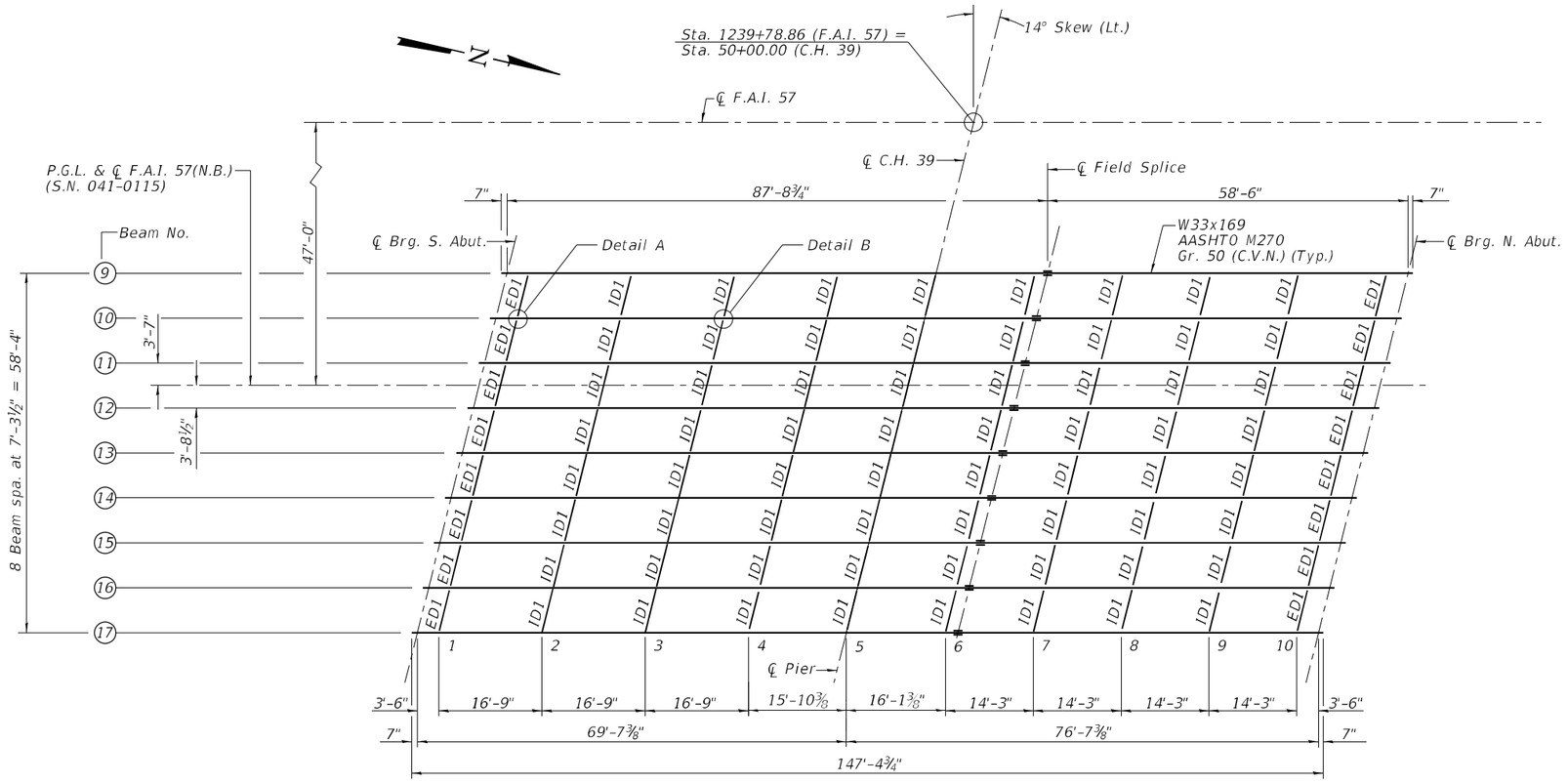

FRAMING PLAN
(SN 041-0115)

TOP OF BEAM ELEVATIONS - S.N. 041-0115

LOCATION	BEAM 9	BEAM 10	BEAM 11	BEAM 12	BEAM 13	BEAM 14	BEAM 15	BEAM 16	BEAM 17
℄ Brg S. Abut.	573.49	573.59	573.66	573.62	573.47	573.28	573.10	572.91	572.72
℄ Pier	574.96	575.06	575.13	575.08	574.93	574.75	574.57	574.38	574.19
℄ Splice	575.34	575.44	575.51	575.47	575.32	575.13	574.95	574.76	574.57
℄ Brg N. Abut.	576.78	576.88	576.95	576.91	576.76	576.58	576.39	576.20	576.01

For Fabrication Only

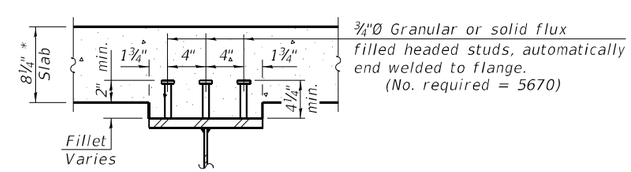

SECTION A-A
* Prior to Deck Grinding

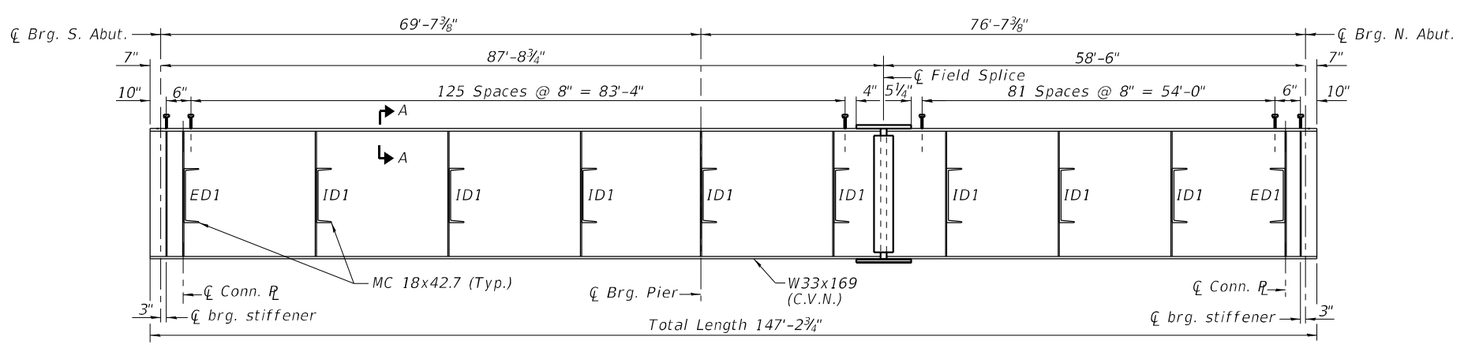

BEAM ELEVATION

INTERIOR GIRDER MOMENT TABLE				
		0.4 Sp. 1	Pier	0.6 Sp. 2
I_s	(in^4)	9290	9290	9290
$I_c(n)$	(in^4)	24,951	12,367	24,951
$I_c(3n)$	(in^4)	18,278	12,367	18,278
$I_c(cr)$	(in^4)	—	9,965	—
S_s	(in^3)	550	550	550
$S_c(n)$	(in^3)	807	876	807
$S_c(3n)$	(in^3)	730	876	730
$S_c(cr)$	(in^3)	—	715	—
DC1	(k/')	0.946	0.946	0.946
M_{DC1}	('k)	217	510	290
DC2	(k/')	0.194	0.194	0.194
M_{DC2}	('k)	37	87	50
DW	(k/')	0.365	0.365	0.365
M_{DW}	('k)	70	164	93
LLDF		0.62	0.62	0.62
M_{LL+IM}	('k)	563	618	599
M_u (Strength I)	('k)	1408	2074	1613
$\phi_f M_n$	('k)	4099	—	4099
f_s DC1	(ksi)	4.73	11.12	6.33
f_s DC2	(ksi)	0.60	1.46	0.82
f_s DW	(ksi)	1.15	2.75	1.53
f_s (LL+IM)	(ksi)	8.37	10.37	8.91
f_s (Service II)	(ksi)	17.36	28.81	20.26
$0.95R_hF_{yf}$	(ksi)	47.50	47.50	47.50
f_s (Total)(Strength I)	(ksi)	23.04	38.00	26.83
ϕF_n	(ksi)	50.00	50.00	50.00
V_f	(k)	37.50	40.95	37.19

INTERIOR GIRDER REACTION TABLE				
		S. Abut.	Pier	N. Abut.
LLDF		0.76	0.76	0.76
OCF		—	—	—
R_{DC1}	(k)	39.57	83.50	45.57
R_{DC2}	(k)	6.60	14.26	7.59
R_{DW}	(k)	12.39	26.80	14.26
R_{LL+IM}	(k)	81.07	101.96	87.21
R_{Total}	(k)	139.63	226.52	154.63

EXTERIOR GIRDER REACTION TABLE				
		S. Abut.	Pier	N. Abut.
LLDF		0.60	0.60	0.60
OCF		1.05	1.05	1.05
R_{DC1}	(k)	37.45	79.16	43.37
R_{DC2}	(k)	6.51	14.19	7.64
R_{DW}	(k)	12.25	26.69	14.37
R_{LL+IM}	(k)	75.55	95.52	80.51
R_{Total}	(k)	131.76	215.56	145.89

Note:
See sheet 23 of 37 for table notes.

NOTES:
1. All diaphragms shall be installed as steel is erected and secured with erection pins and bolts except as otherwise noted. Individual diaphragms at supports may be temporarily disconnected to install bearing anchor rods.
2. Load carrying components designated "CVN" shall conform to the Impact Testing Requirement, Zone 2.

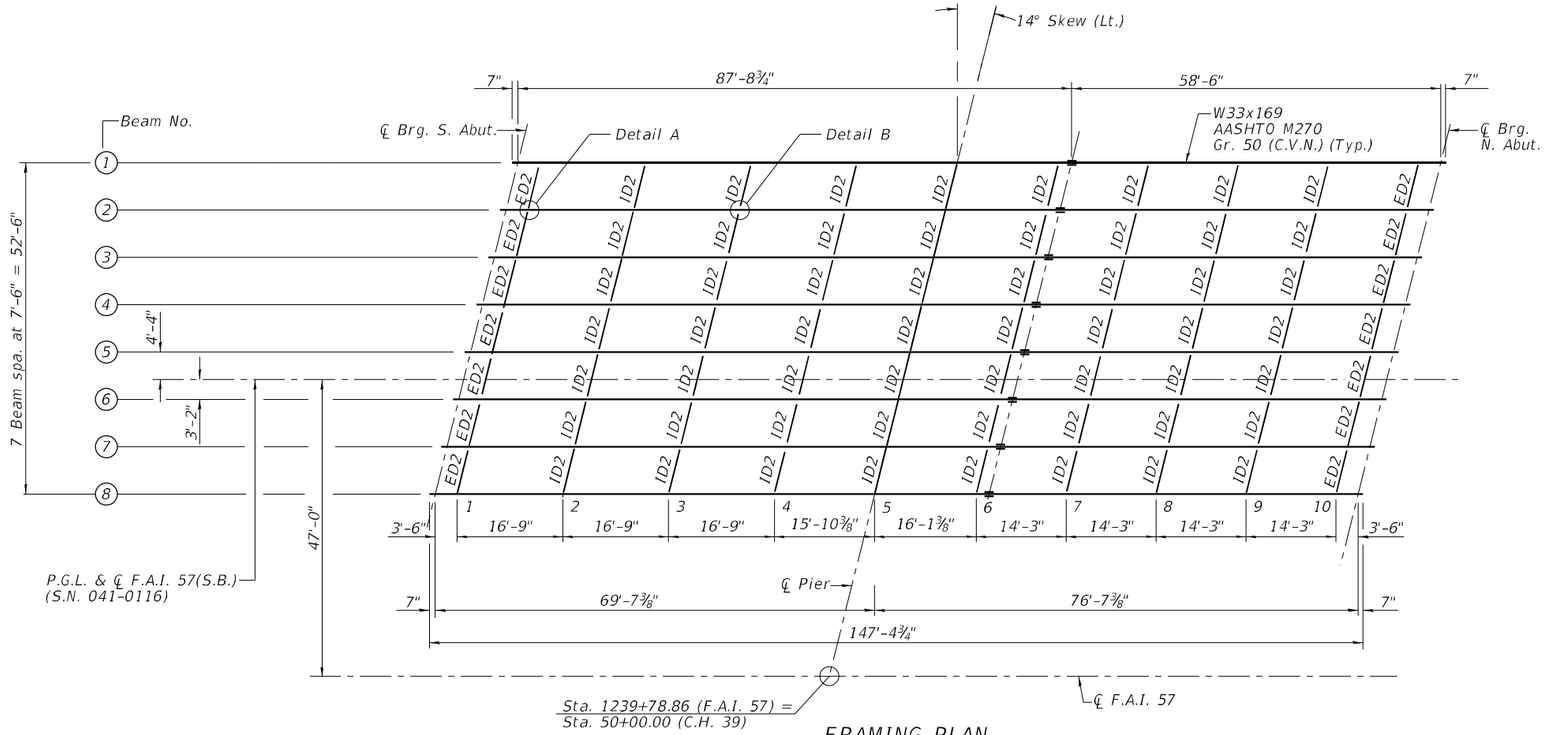

FRAMING PLAN

TOP OF BEAM ELEVATIONS - S.N. 041-0116

LOCATION	BEAM 1	BEAM 2	BEAM 3	BEAM 4	BEAM 5	BEAM 6	BEAM 7	BEAM 8
℄ Brg S. Abut.	573.97	574.08	574.19	574.29	574.36	574.34	574.18	574.00
℄ Pier	575.44	575.54	575.65	575.76	575.83	575.81	575.65	575.47
℄ Splice	575.82	575.93	576.03	576.14	576.21	576.19	576.03	575.85
℄ Brg S. Abut.	577.26	577.37	577.48	577.58	577.65	577.63	577.47	577.29

For Fabrication Only

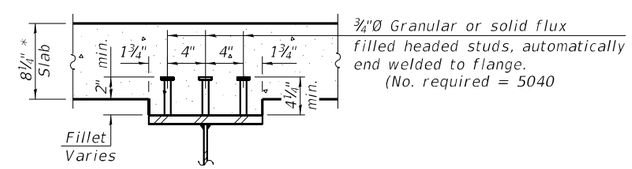

SECTION A-A

* Prior to Deck Grinding

INTERIOR GIRDER MOMENT TABLE				
		0.4 Sp. 1	Pier	0.6 Sp. 2
I_s	(in^4)	9290	9290	9290
$I_c(n)$	(in^4)	24,707	12,259	24,707
$I_c(3n)$	(in^4)	18,046	12,259	18,046
$I_c(cr)$	(in^4)	—	9,965	—
S_s	(in^3)	550	550	550
$S_c(n)$	(in^3)	805	862	805
$S_c(3n)$	(in^3)	726	862	726
$S_c(cr)$	(in^3)	—	715	—
DC1	(k/')	0.967	0.967	0.967
M_{DC1}	('k)	222	522	297
DC2	(k/')	0.194	0.194	0.194
M_{DC2}	('k)	37	87	49
DW	(k/')	0.375	0.375	0.375
M_{DW}	('k)	71	168	95
LLDF		0.63	0.63	0.63
M_{LL+IM}	('k)	584	641	620
M_u (Strength I)	('k)	1452	2135	1660
$\phi_f M_n$	('k)	4056	—	4056
f_s DC1	(ksi)	4.84	11.39	6.48
f_s DC2	(ksi)	0.61	1.46	0.81
f_s DW	(ksi)	1.17	2.82	1.57
f_s (LL+IM)	(ksi)	9.65	10.76	10.25
f_s (Service II)	(ksi)	19.17	29.66	22.19
$0.95R_hF_{yf}$	(ksi)	47.50	47.50	47.50
f_s (Total)(Strength I)	(ksi)	25.46	39.12	29.41
$\phi_f F_n$	(ksi)	50.00	50.00	50.00
V_f	(k)	38.08	41.66	37.82

INTERIOR GIRDER REACTION TABLE				
		S. Abut.	Pier	N. Abut.
LLDF		0.78	0.78	0.78
OCF		—	—	—
R_{DC1}	(k)	40.50	85.47	46.65
R_{DC2}	(k)	6.59	14.22	7.56
R_{DW}	(k)	12.71	27.49	14.63
R_{LL+IM}	(k)	84.56	105.57	90.57
R_{Total}	(k)	144.36	232.75	159.41

EXTERIOR GIRDER REACTION TABLE				
		S. Abut.	Pier	N. Abut.
LLDF		0.60	0.60	0.60
OCF		1.05	1.05	1.05
R_{DC1}	(k)	38.86	82.10	44.97
R_{DC2}	(k)	6.52	14.21	7.65
R_{DW}	(k)	12.60	27.47	14.79
R_{LL+IM}	(k)	77.04	97.35	82.01
R_{Total}	(k)	135.02	221.13	149.42

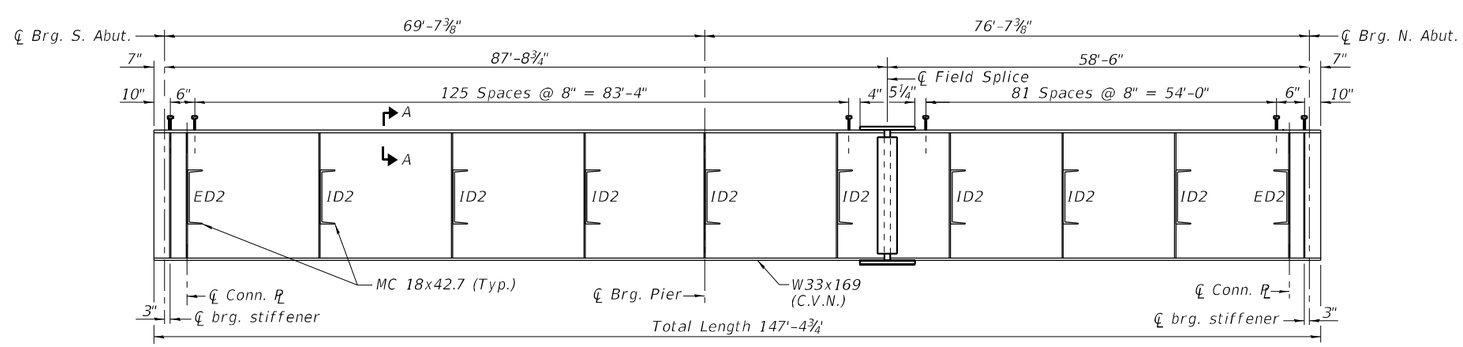

BEAM ELEVATION

Note:
See sheet 23 of 37 for table notes.

NOTES:

1. All diaphragms shall be installed as steel is erected and secured with erection pins and bolts except as otherwise noted. Individual diaphragms at supports may be temporarily disconnected to install bearing anchor rods.
2. Load carrying components designated "CVN" shall conform to the Impact Testing Requirement, Zone 2.

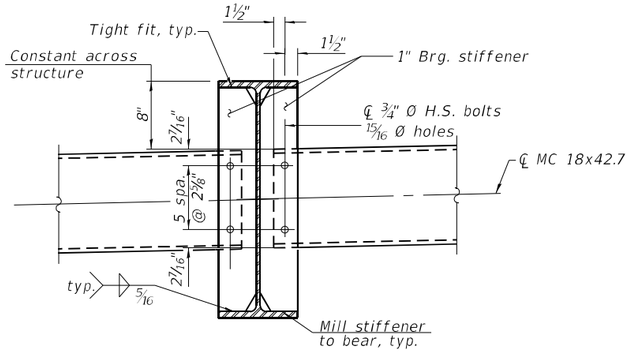

END DIAPHRAGM (ED1) - (ED2)

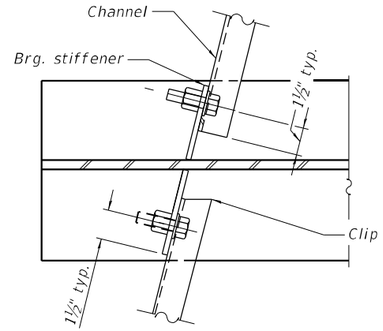

DETAIL A
END DIAPHRAGM

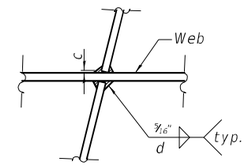

WEB WELD DETAIL
End
d= 5/16" + c

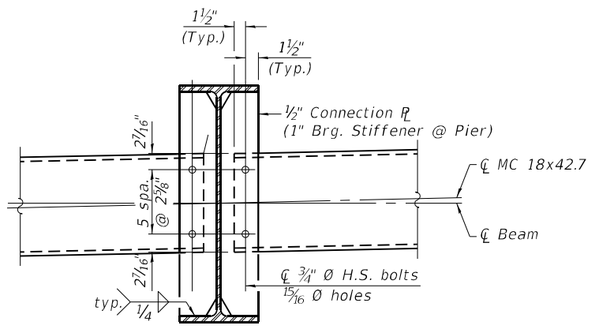

INTERIOR DIAPHRAGM (ID1) - (ID2)

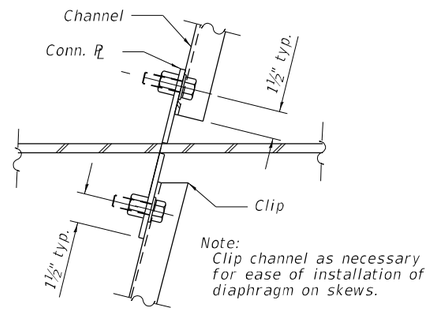

DETAIL B
INTERIOR DIAPHRAGM

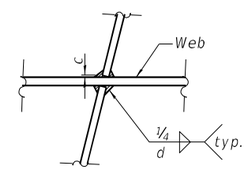

WEB WELD DETAIL
Interior
d= ¼ + c

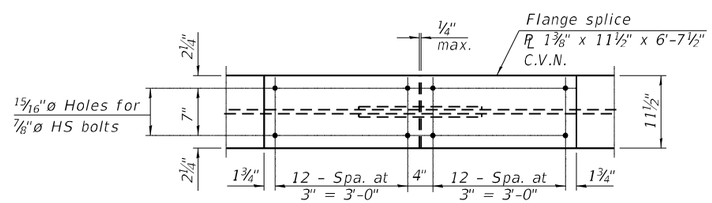

TOP AND BOTTOM FLANGE SPLICE PLATE

(18 Required S.N. 041-0115)
(16 Required S.N. 041-0116)

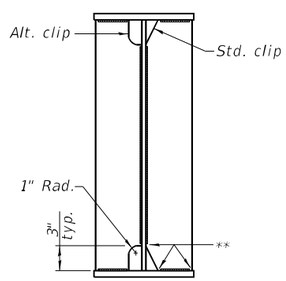

WELD LIMITS AND CLIP DETAILS

** Stop welds ¼" (±1/8") from edges as shown typical.

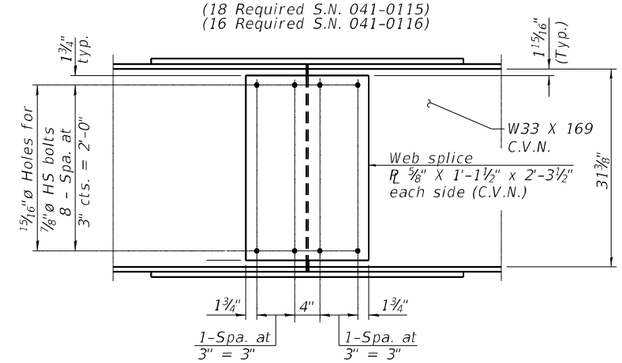

WEB SPLICE PLATE

(9 Required S.N. 041-0115)
(8 Required S.N. 041-0116)

Is, Ss: Non-composite moment of inertia and section modulus of the steel section used for computing fs(Total-Strength I, and Service II) due to non-composite dead loads (in.^{4} and in.^{3}).

Ic(n), Sc(n): Composite moment of inertia and section modulus of the steel and deck based upon the modular ratio, "n", used for computing fs(Total-Strength I, and Service II) in uncracked sections due to short-term composite live loads (in.^{4} and in.^{3}).

Ic(3n), Sc(3n): Composite moment of inertia and section modulus of the steel and deck based upon 3 times the modular ratio, "3n", used for computing fs(Total-Strength I, and Service II) in uncracked sections, due to long-term composite (superimposed) dead loads (in.^{4} and in.^{3}).

Ic(cr), Sc(cr): Composite moment of inertia and section modulus of the steel and longitudinal deck reinforcement, used for computing fs (Total-Strength I and Service II) in cracked sections, due to both short-term composite live loads and long-term composite (superimposed) dead loads (in.^{4} and in.^{3}).

DC1: Un-factored non-composite dead load (kips/ft.).

MDC1: Un-factored moment due to non-composite dead load (kip-ft.).

DC2: Un-factored long-term composite (superimposed excluding future wearing surface) dead load (kips/ft.).

MDC2: Un-factored moment due to long-term composite (superimposed excluding future wearing surface) dead load (kip-ft.).

DW: Un-factored long-term composite (superimposed future wearing surface only) dead load (kips/ft.).

MDW: Un-factored moment due to long-term composite (superimposed future wearing surface only) dead load (kip-ft.).

M_{LL+IM}: Un-factored live load moment plus dynamic load allowance (impact) (kip-ft.).

Mu (Strength I): Factored design moment (kip-ft.).
1.25 (MDC1 + MDC2) + 1.5 MDW + 1.75 M_{LL+IM}

Ø*f* Mn: Compact composite positive moment capacity computed according to Article 6.10.7.1 or non-slender negative moment capacity according to Article A6.1.1 or A6.1.2 (kip-ft).

fs DC1: Un-factored stress at edge of flange for controlling steel flange due to vertical non-composite dead loads as calculated below (ksi).
MDC1/ Snc

fs DC2: Un-factored stress at edge of flange for controlling steel flange due to vertical composite dead loads as calculated below (ksi).
MDC2/ Sc(3n) or MDC2/ Sc(cr) as applicable.

fs DW: Un-factored stress at edge of flange for controlling steel flange due to vertical composite future wearing surface loads as calculated below (ksi).
MDW/ Sc(3n) or MDW/ Sc(cr) as applicable.

fs (LL+IM): Un-factored stress at edge of flange for controlling steel flange due to vertical composite live load plus impact loads as calculated below (ksi).
M_{LL+IM} / Sc(n) or M_{LL+IM} / Sc(cr) as applicable.

fs (Service II): Sum of stresses as computed below (ksi).
fsDC1 + fsDC2 + fsDW + 1.3 fs($_{LL+IM}$)

0.95RhFyf: Composite stress capacity for Service II loading according to Article 6.10.4.2 (ksi).

fs (Total)(Strength I): Sum of stresses as computed below on non-compact section (ksi).
1.25 (fsDC1 + fsDC2) + 1.5 fsDW + 1.75 fs($_{LL+IM}$)

Ø*f* Fn: Non-Compact composite positive or negative stress capacity for Strength I loading according to Article 6.10.7 or 6.10.8 (ksi).

Vf: Maximum factored shear range in span computed according to Article 6.10.10.

Note:
M_{LL} and R_{LL} include the effects of centrifugal force and superelevation.

NOTES:

1. H.S. bolts for splices shall be ⅞"Ø AASHTO M164 (ASTM A325) bolts.
2. All splice plate material shall be AASHTO M270 Grade 50 (C.V.N.)
3. Load carrying components designed "C.V.N." shall conform to the supplemental requirements for notch toughness (Zone 2).
4. Two hardened washers required for each set of oversized holes.
5. Alternate channels are permitted to facilitate material acquisition. Calculated weight of structural steel is based on the lighter section.
6. The alternate, if utilized, shall be provided at no additional cost to the Department.

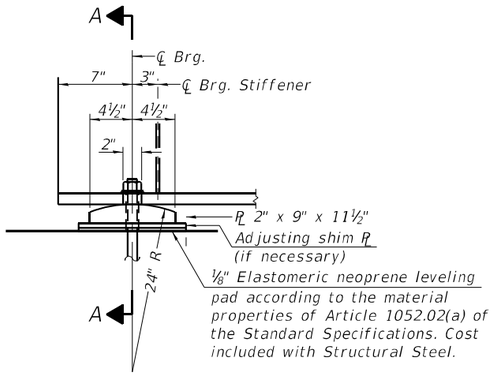

ELEVATION

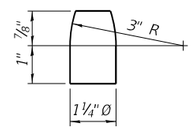

PINTLE

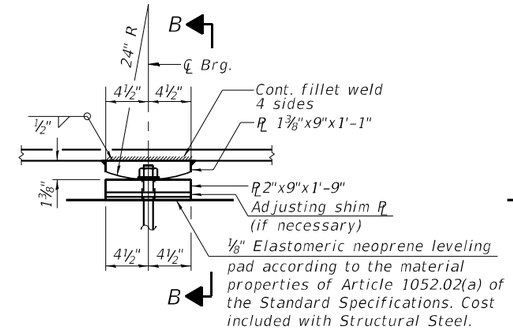

ELEVATION

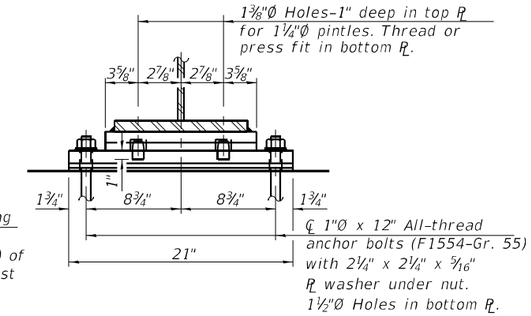

SECTION B-B

FIXED BEARING AT PIER

S.N. 041-0115 & 041-0116

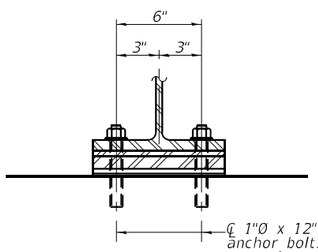

℄ 1"Ø x 12" All-thread
anchor bolts (Grade 55)
with 2¼" x 2¼" x 5/16"
PL washer under nuts.
1⅜" x 2" slotted holes in
flange. 1½" Ø holes in brg. PL.

SECTION A-A

INTEGRAL ABUTMENT BEARING

S.N. 041-0115 & 041-0116

BILL OF MATERIAL

(S.N. 041-0115)

Item	Unit	Total
Anchor Bolts, 1"	Each	54

BILL OF MATERIAL

(S.N. 041-0116)

Item	Unit	Total
Anchor Bolts, 1"	Each	48

Note:

The structural steel plates of the Bearing Assembly shall conform to the requirements of AASHTO M270 Grade 50.

Two ⅛" adjusting shims shall be provided for each bearing in addition to all other plates and shims and places as shown on bearing details.

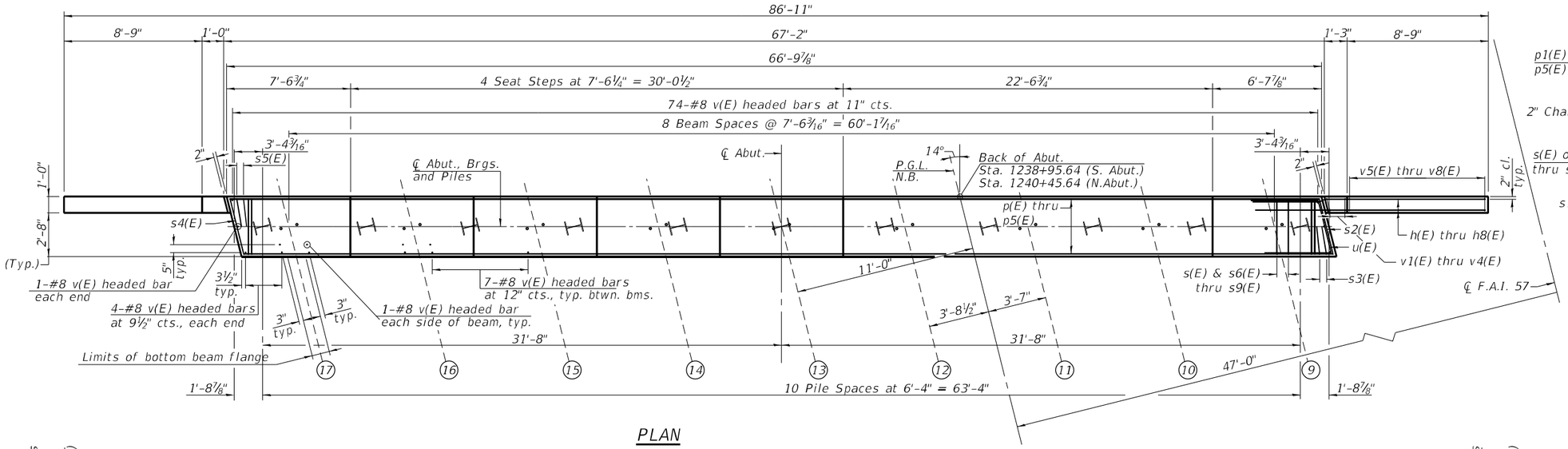

PLAN

(S. Abut. Shown - N. Abut. Opp. Hand)

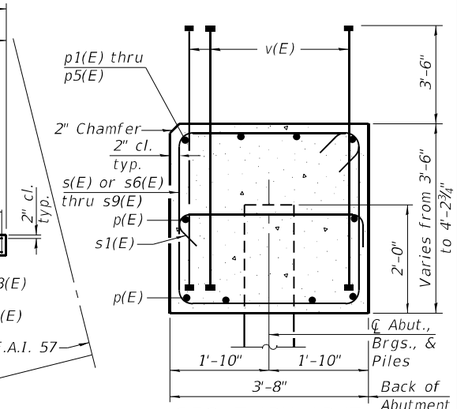

SEC. THRU ABUT.

Dimensions at right angles to abutment.

PILE DATA

Type: HP12x53
Nominal Required Bearing: 419 kips
Factored Resistance Available: 230 kips
Est. Length: 36 Ft. (N. Abut. & S. Abut.)
No. Piles: 11 Including (1) Test Pile (N. Abut. & S. Abut.)

Note: See Sht. 31 of 37 for Seismic Pile Detail

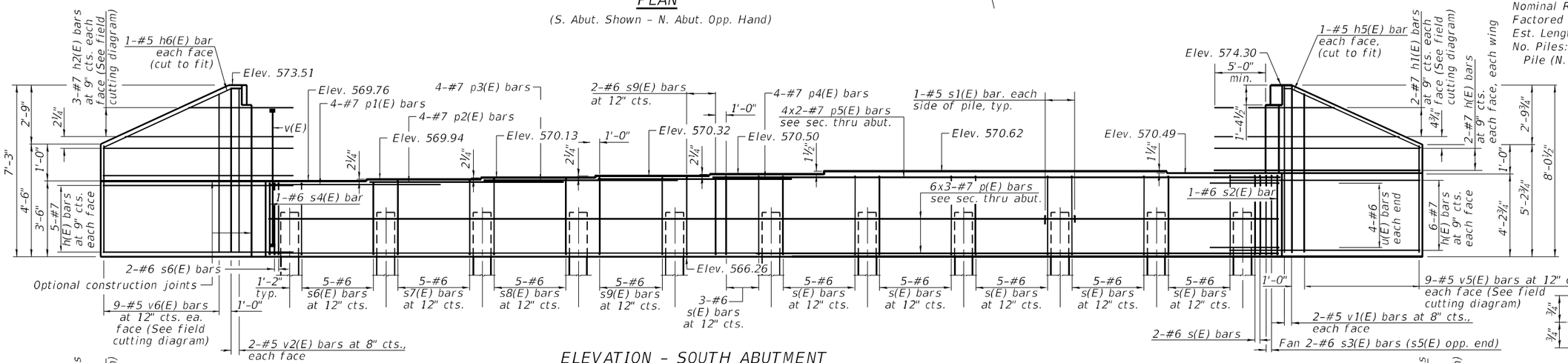

ELEVATION - SOUTH ABUTMENT

(Looking South)

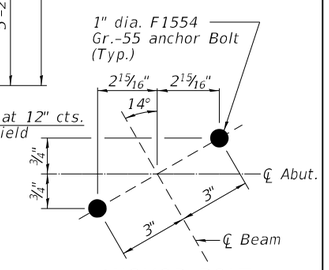

ANCHOR BOLT INSTALLATION DETAIL

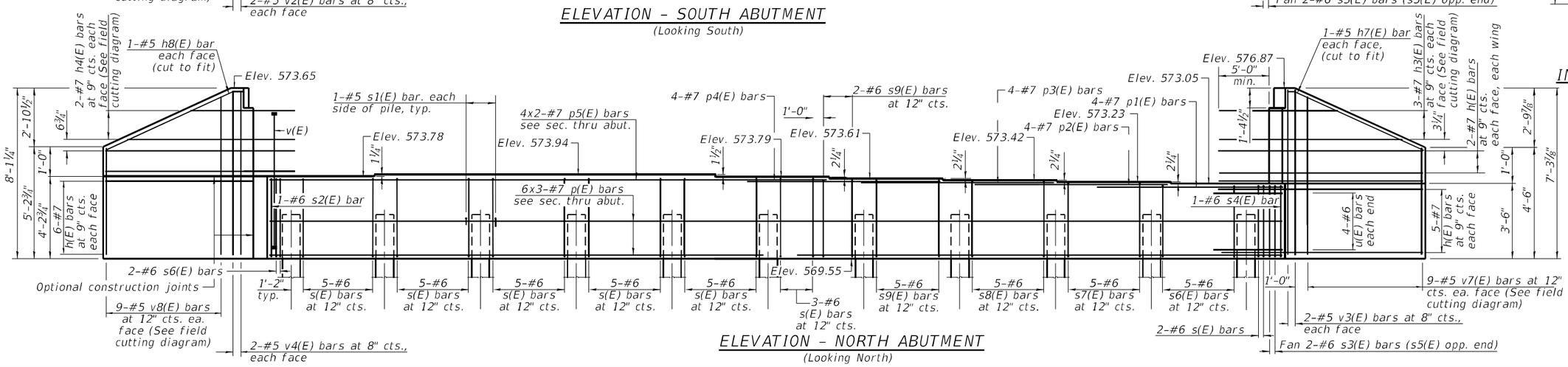

ELEVATION - NORTH ABUTMENT

(Looking North)

MIN. BAR LAP

#7(E) Bar = 5'-0"

CMT License No. 184-000613 ©Copyright CMT, Inc.	USER NAME = Derek Cochran	DESIGNED - AI	REVISED -
		CHECKED -	REVISED -
	PLOT SCALE = N/A	DRAWN - GLD	REVISED -
	PLOT DATE = 3/5/2021 (8:05:26 AM)	CHECKED -	REVISED -

STATE OF ILLINOIS
DEPARTMENT OF TRANSPORTATION

ABUTMENT DETAILS
STRUCTURE NO. 041-0115 (NB)

SHEET 25 OF 37 SHEETS

F.A.I. RTE.	SECTION	COUNTY	TOTAL SHEETS	SHEET NO.
57	(41-4)B-2	JEFFERSON	257	127
		CONTRACT NO. 78550		
		ILLINOIS FED. AID PROJECT		

MODEL: Default
FILE NAME: L:\IDOT\100610\WO_6\Draw\Structures\026b-Abutment Details 041-0115 (NB).dgn

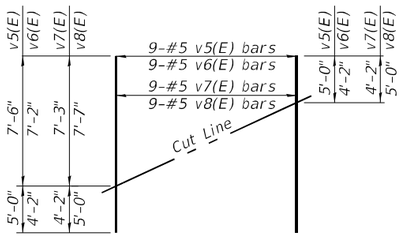

FIELD CUTTING DIAGRAM

Order v5(E), v6(E), v7(E), & v8(E) full length. Cut as shown and use remainder of bars in opposite face.

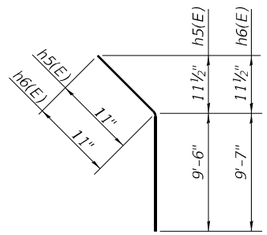

BAR h5(E) & h6(E)

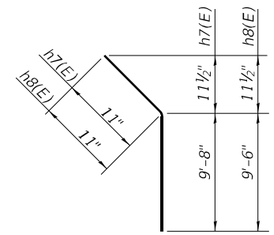

BAR h7(E) & h8(E)

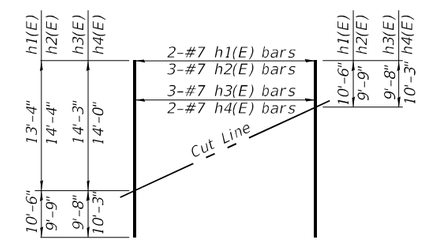

FIELD CUTTING DIAGRAM

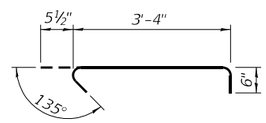

BAR s1(E)

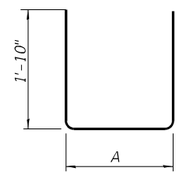

Bar	A
s3(E)	3'-10"
s5(E)	3'-2"

BAR s3(E) & s5(E)

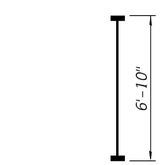

BAR v(E)

(Headed)

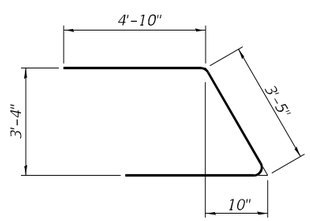

BAR u(E)

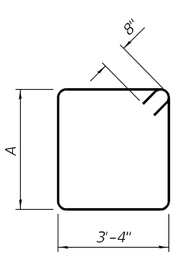

Bar	A
s(E)	3'-10"
s6(E)	3'-2"
s7(E)	3'-4"
s8(E)	3'-6"
s9(E)	3'-8"

BAR s(E), s6(E), s7(E), s8(E), and s9(E)

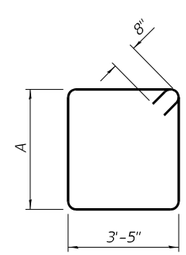

Bar	A
s2(E)	3'-11"
s4(E)	3'-2"

BAR s2(E) & s4(E)

BILL OF MATERIAL

(South Abutment)

Bar	No.	Size	Length	Shape
h(E)	30	#7	14'-10"	
h1(E)	2	#7	23'-10"	
h2(E)	3	#7	24'-1"	
h5(E)	2	#5	10'-5"	
h6(E)	2	#5	10'-6"	
p(E)	18	#7	26'-0"	
p1(E)	4	#7	11'-8"	
p2(E)	4	#7	12'-7"	
p3(E)	4	#7	12'-7"	
p4(E)	4	#7	12'-7"	
p5(E)	8	#7	21'-7"	
s(E)	30	#6	15'-8"	
s1(E)	22	#5	4'-4"	
s2(E)	1	#6	16'-0"	
s3(E)	2	#6	7'-6"	
s4(E)	1	#6	14'-6"	
s5(E)	2	#6	6'-10"	
s6(E)	7	#6	14'-4	
s7(E)	5	#6	14'-8"	
s8(E)	5	#6	15'-0"	
s9(E)	7	#6	15'-4	
u(E)	8	#6	13'-1"	
v(E)	158	#8	6'-10"	
v1(E)	4	#5	7'-8	
v2(E)	4	#5	6'-11"	
v5(E)	9	#5	12'-6"	
v6(E)	9	#5	11'-4"	
Structure Excavation		Cu. Yd.	186	
Concrete Structures		Cu. Yd.	43.4	
Protective Coat		Sq. Yd.	8	
Reinforcement Bars, Epoxy Coated		Pound	7660	
Furnishing Steel Piles, HP 12x53		Foot	360	
Driving Piles		Foot	360	
Test Pile, HP 12x53		Each	1	

BILL OF MATERIAL

(North Abutment)

Bar	No.	Size	Length	Shape
h(E)	30	#7	14'-10"	
h3(E)	3	#7	23'-11"	
h4(E)	2	#7	23'-3"	
h7(E)	2	#5	10'-7"	
h8(E)	2	#5	10'-5"	
p(E)	18	#7	26-0"	
p1(E)	4	#7	11'-8"	
p2(E)	4	#7	12'-7"	
p3(E)	4	#7	12'-7"	
p4(E)	4	#7	12'-7"	
p5(E)	8	#7	21'-7"	
s(E)	30	#6	15'-8"	
s1(E)	22	#5	4'-4"	
s2(E)	1	#6	16'-0"	
s3(E)	2	#6	7'-6"	
s4(E)	1	#6	14'-6"	
s5(E)	2	#6	6'-10"	
s6(E)	7	#6	14'-4"	
s7(E)	5	#6	14-8	
s8(E)	5	#6	15'-0"	
s9(E)	7	#6	15'-4"	
u(E)	8	#6	13'-1"	
v(E)	158	#8	6'-10"	
v3(E)	4	#5	7'-0"	
v4(E)	4	#5	7'-9"	
v7(E)	9	#5	11'-5"	
v8(E)	9	#5	12'-7"	
Structure Excavation		Cu. Yd.	189	
Concrete Structures		Cu. Yd.	43.5	
Protective Coat		Sq. Yd.	8	
Reinforcement Bars, Epoxy Coated		Pound	7660	
Furnishing Steel Piles, HP 12x53		Foot	360	
Driving Piles		Foot	360	
Test Pile, HP 12x53		Each	1	

Notes:
Pour steps monolithically with cap.
Headed bars shall conform to ASTM A970 with threaded attachment; Class HA; and reinforcement bars conforming to ASTM A706. Cost included with Reinforcement Bars, Epoxy Coated.
For details of piles see sheet 31 of 37 .

STRUCTURE NO. 041-0115 (N.B.)

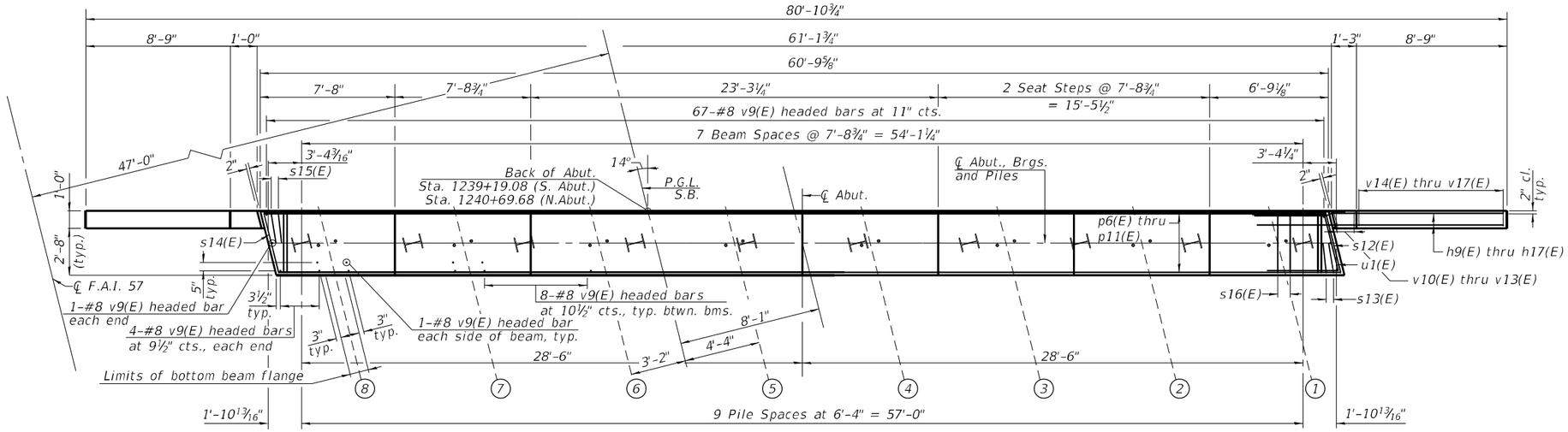

PLAN

(S. Abut. Shown - N. Abut. Opp. Hand)

PILE DATA

Type: HP12x53
Nominal Required Bearing: 419 kips
Factored Resistance Available: 230 kips
Est. Length: 36 Ft. (N. Abut. & S. Abut.)
No. Piles: 10 Including (1) Test Pile (N. Abut. & S. Abut.)

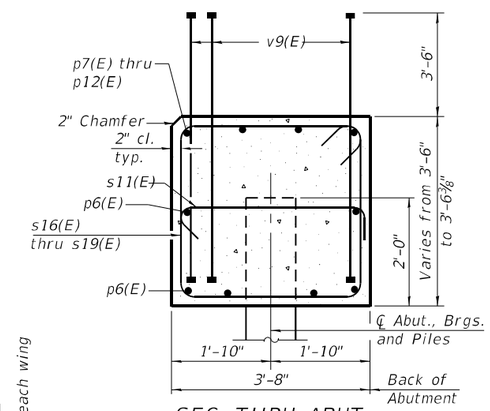

SEC. THRU ABUT.

Dimensions at right angles to abutment.

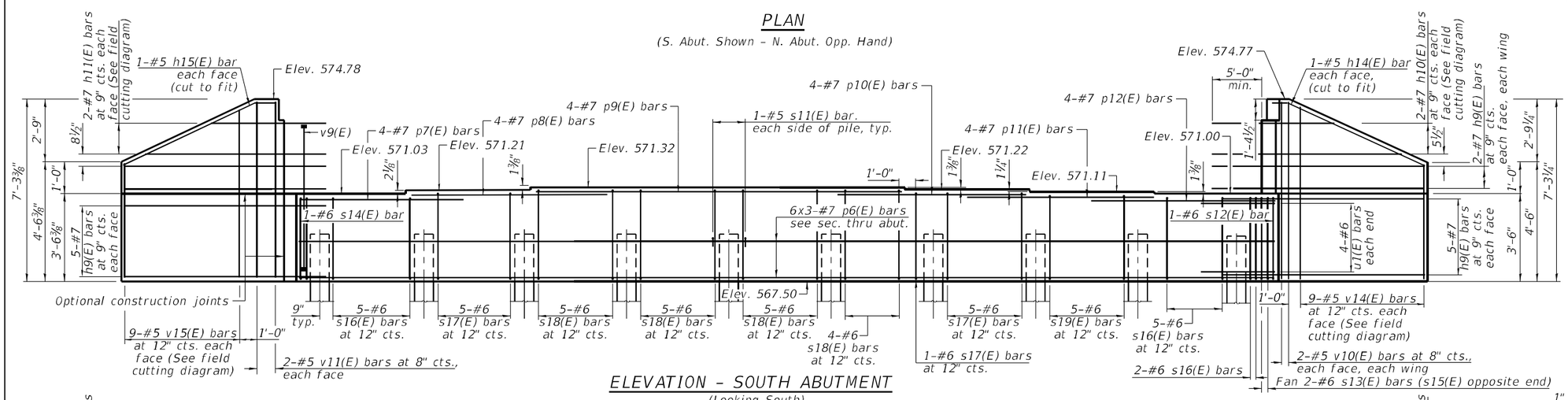

ELEVATION - SOUTH ABUTMENT

(Looking South)

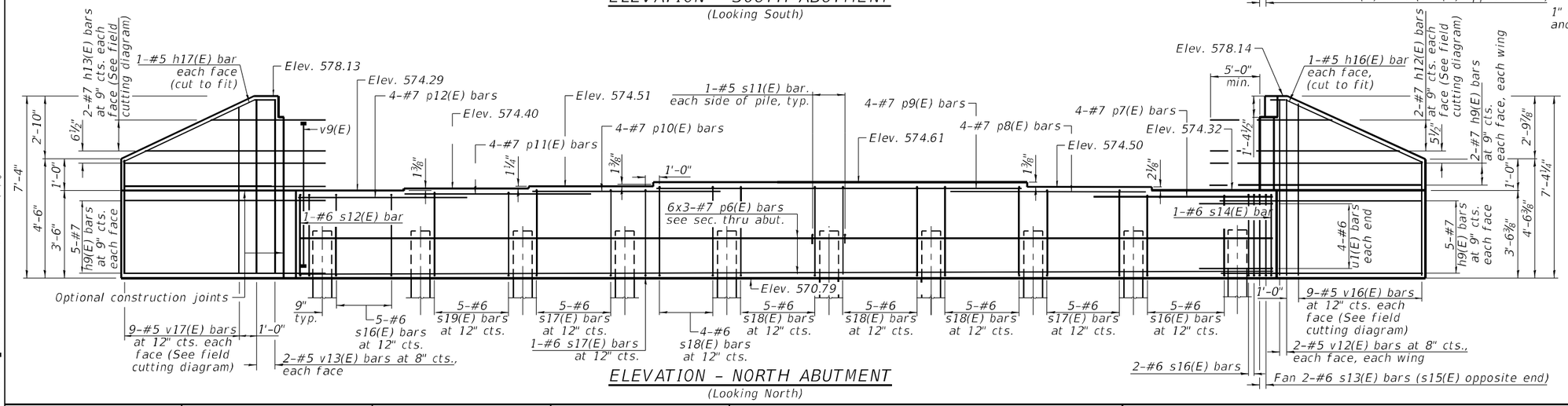

ELEVATION - NORTH ABUTMENT

(Looking North)

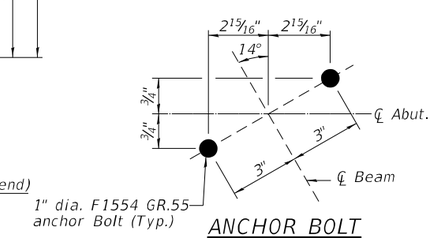

ANCHOR BOLT INSTALLATION DETAIL

Minimum Bar Lap

#7(E) Bar = 5'-0"

Note:
See Sht. 31 of 37 for Seismic Pile Detail

MODEL: Default
FILE NAME: L:\DOT\1\90810\WO_#\Draw\Structures\027\Abutment Details 041-0116 (SB).dgn

CMT
License No. 184-000613

USER NAME = Derek Cochran	DESIGNED - AI	REVISED -	
	CHECKED -	REVISED -	
PLOT SCALE = N/A	DRAWN - GLD	REVISED -	
PLOT DATE = 3/5/2021 (8:05:32 AM)	CHECKED -	REVISED -	

STATE OF ILLINOIS
DEPARTMENT OF TRANSPORTATION

ABUTMENT DETAILS
STRUCTURE NO. 041-0116 (SB)

SHEET 27 OF 37 SHEETS

F.A.I. RTE.	SECTION	COUNTY	TOTAL SHEETS	SHEET NO.
57	(41-4)B-2	JEFFERSON	257	129
		CONTRACT NO. 78550		
		ILLINOIS	FED. AID PROJECT	

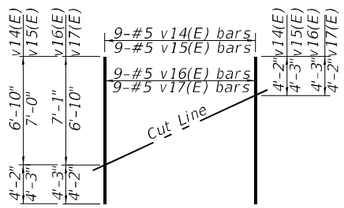

FIELD CUTTING DIAGRAM

Order v14(E) thru v17(E) full length.
Cut as shown and use remainder
of bars in opposite face.

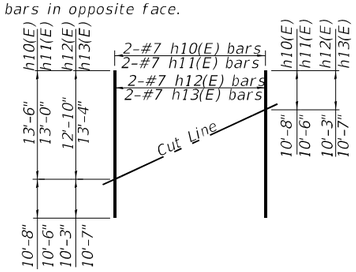

FIELD CUTTING DIAGRAM

Order h10(E) thru h13(E) full length.
Cut as shown and use remainder
of bars in opposite face.

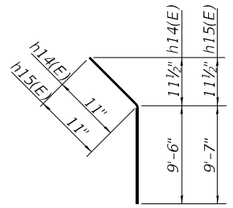

BAR h14(E) & h15(E)

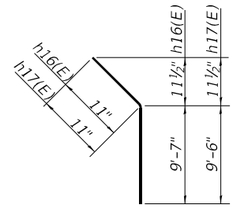

BAR h16(E) & h17(E)

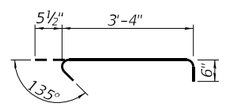

BAR s11(E)

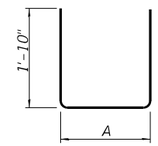

Bar	A
s13(E)	3'-2"
s15(E)	3'-3"

BAR s13(E) & s15(E)

BAR v9(E)

(Headed)

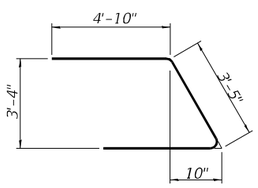

BAR u1(E)

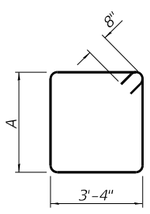

Bar	A
s16(E)	3'-2"
s17(E)	3'-4"
s18(E)	3'-6"
s19(E)	3'-3"

BAR s16(E), s17(E), s18(E) and s19(E)

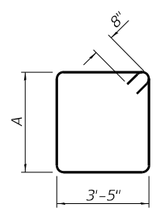

Bar	A
s12(E)	3'-2"
s14(E)	3'-3"

BAR s12(E) & s14(E)

BILL OF MATERIAL

(South Abutment)

Bar	No.	Size	Length	Shape
h9(E)	28	#7	15'-0"	
h10(E)	2	#7	24'-2"	
h11(E)	2	#7	23'-6"	
h14(E)	2	#5	10'-5"	
h15(E)	2	#5	10'-6"	
p6(E)	18	#7	23'-10"	
p7(E)	4	#7	12'-11"	
p8(E)	4	#7	12'-11"	
p9(E)	4	#7	22'-11"	
p10(E)	4	#7	13'-1"	
p11(E)	4	#7	13'-1"	
p12(E)	4	#7	12'-1"	
s11(E)	20	#5	4'-4"	
s12(E)	1	#6	14'-6"	
s13(E)	2	#6	6'-10"	
s14(E)	1	#6	14'-8"	
s15(E)	2	#6	6'-11"	
s16(E)	12	#6	14'-4"	
s17(E)	11	#6	14'-8"	
s18(E)	19	#6	15'-0"	
s19(E)	5	#6	14'-6"	
u1(E)	8	#6	13'-1"	
v9(E)	149	#8	6'-10"	
v10(E)	4	#5	6'-11"	
v11(E)	4	#5	7'-0"	
v14(E)	9	#5	11'-0"	
v15(E)	9	#5	11'-3"	
Structure Excavation			Cu. Yd.	162
Concrete Structures			Cu. Yd.	36.5
Protective Coat			Sq. Yd.	8
Reinforcement Bars, Epoxy Coated			Pound	7040
Furnishing Steel Piles, HP 12x53			Foot	324
Driving Piles			Foot	324
Test Pile, HP 12x53			Each	1

BILL OF MATERIAL

(North Abutment)

Bar	No.	Size	Length	Shape
h9(E)	28	#7	15'-0"	
h12(E)	2	#7	23'-1"	
h13(E)	2	#7	23'-11"	
h16(E)	2	#5	10'-6"	
h17(E)	2	#5	10'-5"	
p6(E)	18	#7	23'-10"	
p7(E)	4	#7	12'-11"	
p8(E)	4	#7	12'-11"	
p9(E)	4	#7	22'-11"	
p10(E)	4	#7	13'-1"	
p11(E)	4	#7	13'-1"	
p12(E)	4	#7	12'-1"	
s11(E)	20	#5	4'-4"	
s12(E)	1	#6	14'-6"	
s13(E)	2	#6	6'-10"	
s14(E)	1	#6	14'-8"	
s15(E)	2	#6	6'-11"	
s16(E)	12	#6	14'-4"	
s17(E)	11	#6	14'-8"	
s18(E)	19	#6	15'-0"	
s19(E)	5	#6	14'-6"	
u1(E)	8	#6	13'-1"	
v9(E)	149	#8	6'-10"	
v12(E)	4	#5	7'-0"	
v13(E)	4	#5	6'-11"	
v16(E)	9	#5	11'-5"	
v17(E)	9	#5	11'-0"	
Structure Excavation			Cu. Yd.	165
Concrete Structures			Cu. Yd.	36.6
Protective Coat			Sq. Yd.	8
Reinforcement Bars, Epoxy Coated			Pound	7040
Furnishing Steel Piles, HP 12x53			Foot	324
Driving Piles			Foot	324
Test Pile, HP 12x53			Each	1

Notes:
Pour steps monolithically with cap.
Headed bars shall conform to ASTM A970 with threaded attachment; Class HA; and reinforcement bars conforming to ASTM A706. Cost included with Reinforcement Bars, Epoxy Coated.
For details of piles see sheet 31 of 37 .

STRUCTURE NO. 041-0116 (S.B.)

Notes:
Space reinforcement in cap to miss anchor bolts.
Pour steps monolithically with cap.
For details of piles, see sheet 31 of 37.

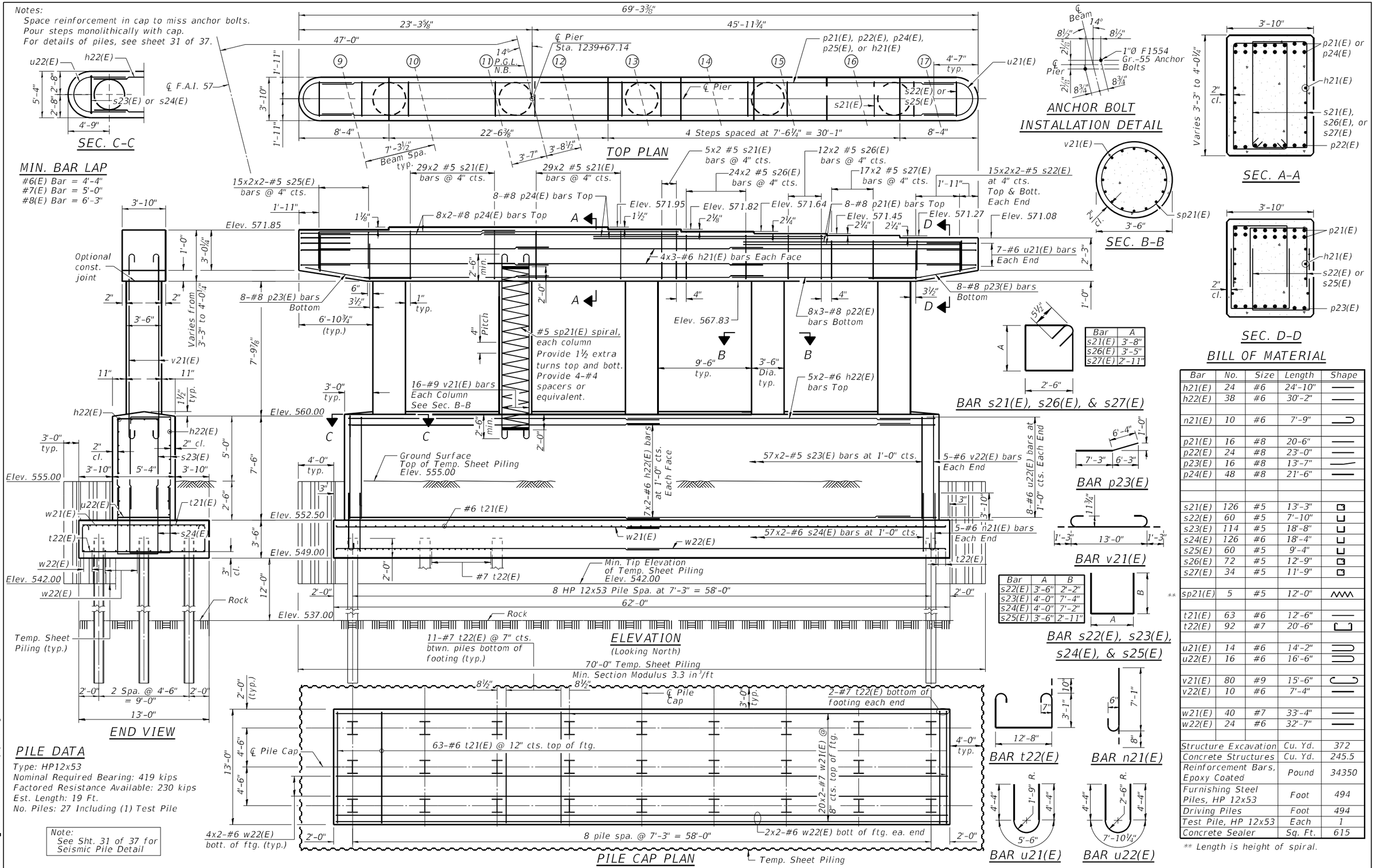

Bar	A
s21(E)	3'-8"
s26(E)	3'-5"
s27(E)	2'-11"

Bar	A	B
s22(E)	3'-6"	2'-2"
s23(E)	4'-0"	7'-4"
s24(E)	4'-0"	7'-2"
s25(E)	3'-6"	2'-11"

Bar	No.	Size	Length	Shape
h21(E)	24	#6	24'-10"	
h22(E)	38	#6	30'-2"	
n21(E)	10	#6	7'-9"	
p21(E)	16	#8	20-6"	
p22(E)	24	#8	23'-0"	
p23(E)	16	#8	13'-7"	
p24(E)	48	#8	21'-6"	
s21(E)	126	#5	13'-3"	
s22(E)	60	#5	7'-10"	
s23(E)	114	#5	18'-8"	
s24(E)	126	#6	18'-4"	
s25(E)	60	#5	9'-4"	
s26(E)	72	#5	12'-9"	
s27(E)	34	#5	11'-9"	
** sp21(E)	5	#5	12'-0"	
t21(E)	63	#6	12'-6"	
t22(E)	92	#7	20'-6"	
u21(E)	14	#6	14'-2"	
u22(E)	16	#6	16'-6"	
v21(E)	80	#9	15'-6"	
v22(E)	10	#6	7'-4"	
w21(E)	40	#7	33'-4"	
w22(E)	24	#6	32'-7"	
Structure Excavation			Cu. Yd.	372
Concrete Structures			Cu. Yd.	245.5
Reinforcement Bars, Epoxy Coated			Pound	34350
Furnishing Steel Piles, HP 12x53			Foot	494
Driving Piles			Foot	494
Test Pile, HP 12x53			Each	1
Concrete Sealer			Sq. Ft.	615

** Length is height of spiral.

CMT	USER NAME = Derek Cochran	DESIGNED - AI	REVISED -
		CHECKED -	REVISED -
	PLOT SCALE = N/A	DRAWN - GLD	REVISED -
	PLOT DATE = 3/5/2021 (8:05:36 AM)	CHECKED -	REVISED -

License No. 184-000613 © Copyright CMT, Inc.

STATE OF ILLINOIS
DEPARTMENT OF TRANSPORTATION

PIER DETAILS
STRUCTURE NO. 041-0115 (NB)

SHEET 29 OF 37 SHEETS

F.A.I. RTE.	SECTION	COUNTY	TOTAL SHEETS	SHEET NO.
57	(41-4)B-2	JEFFERSON	257	131

CONTRACT NO. 78550
ILLINOIS | FED. AID PROJECT

MODEL: Default
FILE NAME: L:\IDOT\190861\0\WO_#2\Draws\Structures\0264-Pier Details (NB) (41-0115).dgn

Notes:
Space reinforcement in cap to miss anchor bolts.
Pour steps monolithically with cap.
For details of piles, see sheet 31 of 37.

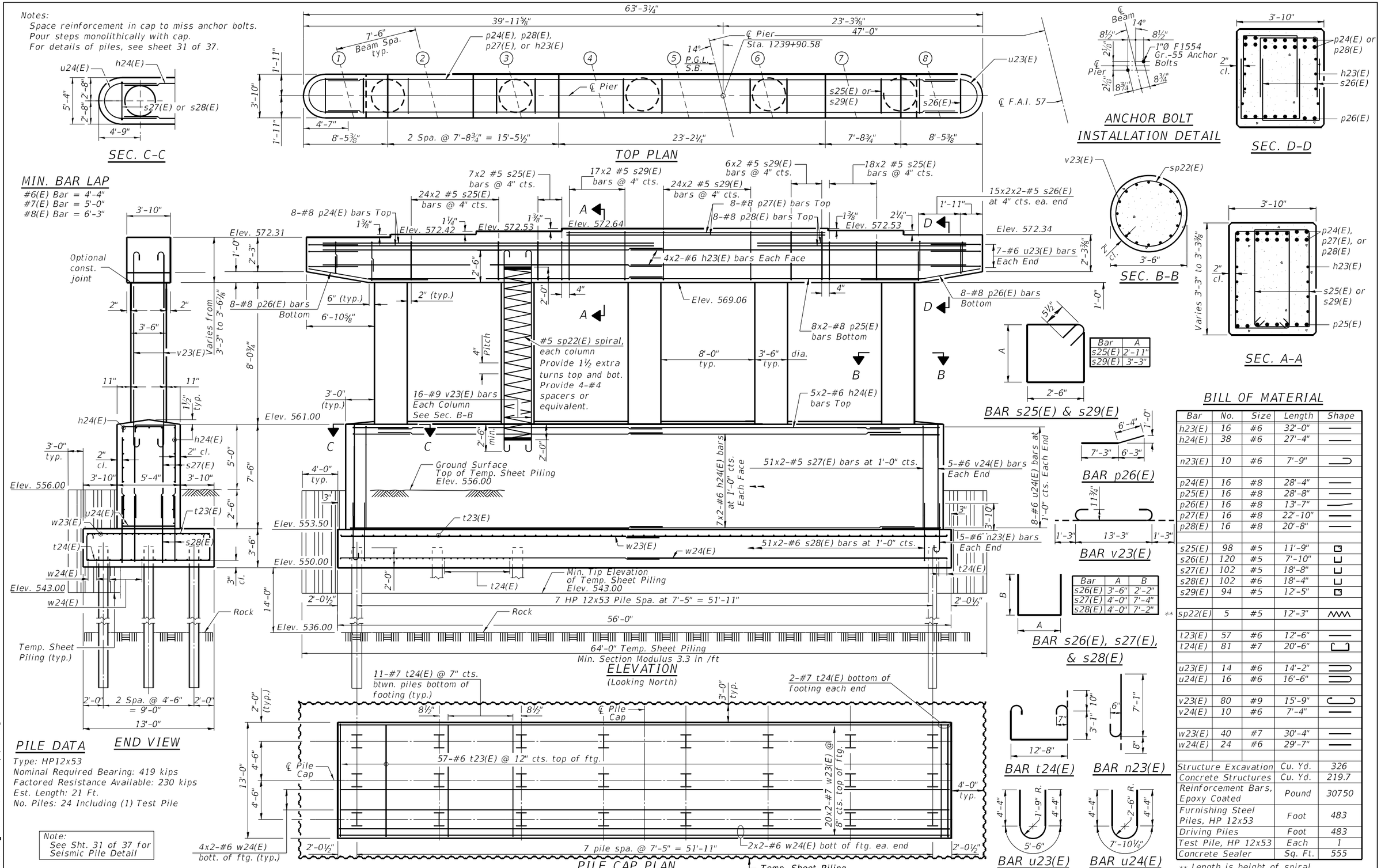

Bar	No.	Size	Length	Shape
h23(E)	16	#6	32'-0"	
h24(E)	38	#6	27'-4"	
n23(E)	10	#6	7'-9"	
p24(E)	16	#8	28'-4"	
p25(E)	16	#8	28'-8"	
p26(E)	16	#8	13'-7"	
p27(E)	16	#8	22'-10"	
p28(E)	16	#8	20'-8"	
s25(E)	98	#5	11'-9"	
s26(E)	120	#5	7'-10"	
s27(E)	102	#5	18'-8"	
s28(E)	102	#6	18'-4"	
s29(E)	94	#5	12'-5"	
** sp22(E)	5	#5	12'-3"	
t23(E)	57	#6	12'-6"	
t24(E)	81	#7	20'-6"	
u23(E)	14	#6	14'-2"	
u24(E)	16	#6	16'-6"	
v23(E)	80	#9	15'-9"	
v24(E)	10	#6	7'-4"	
w23(E)	40	#7	30'-4"	
w24(E)	24	#6	29'-7"	
Structure Excavation		Cu. Yd.	326	
Concrete Structures		Cu. Yd.	219.7	
Reinforcement Bars, Epoxy Coated		Pound	30750	
Furnishing Steel Piles, HP 12x53		Foot	483	
Driving Piles		Foot	483	
Test Pile, HP 12x53		Each	1	
Concrete Sealer		Sq. Ft.	555	

Bar	A
s25(E)	2'-11"
s29(E)	3'-3"

Bar	A	B
s26(E)	3'-6"	2'-2"
s27(E)	4'-0"	7'-4"
s28(E)	4'-0"	7'-2"

CMT
License No. 184-000613
© Copyright CMT, Inc.

USER NAME = Derek Cochran	DESIGNED - AI	REVISED -	
	CHECKED -	REVISED -	
PLOT SCALE = N/A	DRAWN - GLD	REVISED -	
PLOT DATE = 3/5/2021 (8:05:38 AM)	CHECKED -	REVISED -	

STATE OF ILLINOIS
DEPARTMENT OF TRANSPORTATION

PIER DETAILS
STRUCTURE NO. 041-0116 (SB)

SHEET 30 OF 37 SHEETS

F.A.I. RTE.	SECTION	COUNTY	TOTAL SHEETS	SHEET NO.
57	(41-4)B-2	JEFFERSON	257	132
		CONTRACT NO. 78550		
		ILLINOIS FED. AID PROJECT		

MODEL: Default
FILE NAME: L:\IDOT\1906810\WQ_6\Draw\Structures\025-Pier Details (SB) 041-0116.dgn

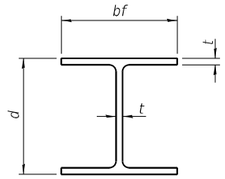

STEEL PILE TABLE

Designation	Depth d	Flange width bf	Web and Flange thickness t	Encasement diameter A
HP 14x117	14¼"	14⅞"	13/16"	30"
x102	14"	14¾"	11/16"	30"
x89	13⅞"	14¾"	⅝"	30"
x73	13⅝"	14⅝"	½"	30"
HP 12x84	12¼"	12¼"	11/16"	24"
x74	12⅛"	12¼"	⅝"	24"
x63	12"	12⅛"	½"	24"
x53	11¾"	12"	7/16"	24"
HP 10x57	10"	10¼"	9/16"	24"
x42	9¾"	10⅛"	7/16"	24"
HP 8x36	8"	8⅛"	7/16"	18"

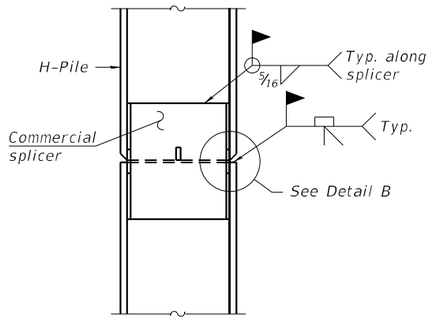

ELEVATION

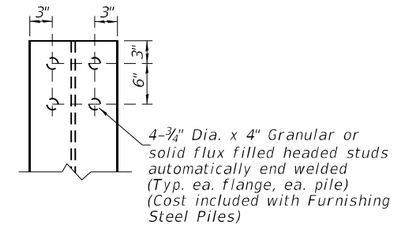

SEISMIC PILE DETAIL
(Typical at Piers and Abutments)

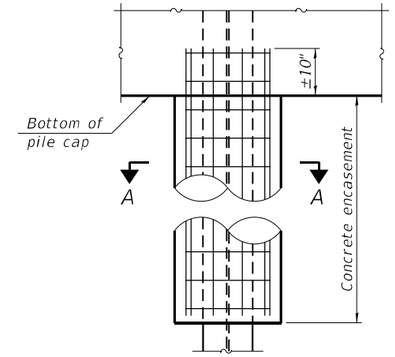

ELEVATION

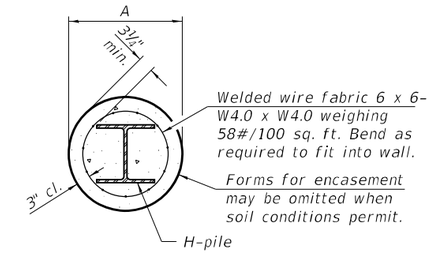

SECTION A-A

INDIVIDUAL PILE
CONCRETE ENCASEMENT
(when specified)

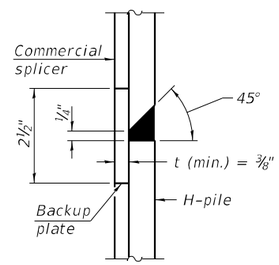

DETAIL "B"

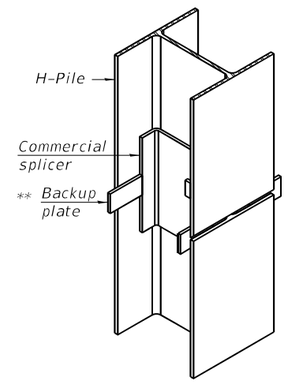

ISOMETRIC VIEW

WELDED COMMERCIAL SPLICE

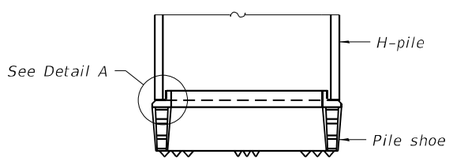

ELEVATION

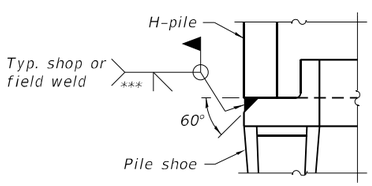

DETAIL A

SHOE ATTACHMENT

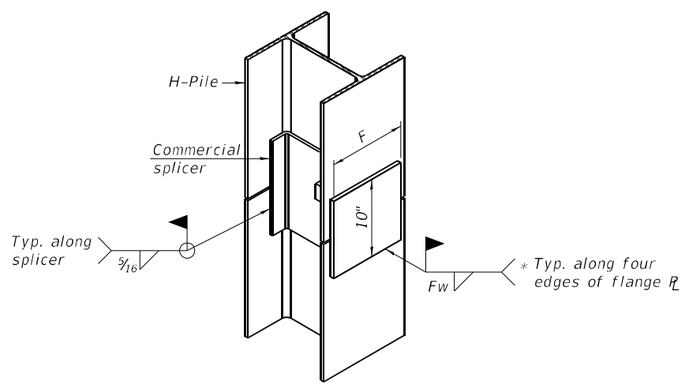

ISOMETRIC VIEW

WELDED COMMERCIAL SPLICE ALTERNATE

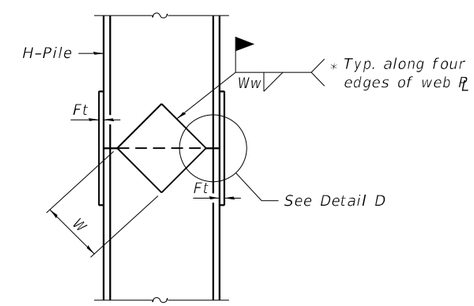

ELEVATION

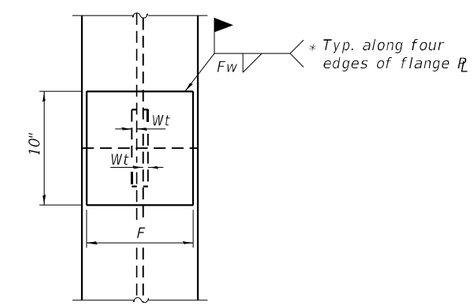

END VIEW

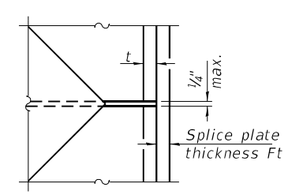

DETAIL D

Designation	F	Ft	Fw	W	Wt	Ww
HP 14x117	12½"	1"	⅞"	7¾"	⅝"	½"
x102	12½"	⅞"	¾"	7¾"	⅝"	½"
x89	12½"	¾"	11/16"	7¾"	⅝"	½"
x73	12½"	⅝"	9/16"	7¾"	⅝"	½"
HP 12x84	10"	⅞"	11/16"	6½"	⅝"	½"
x74	10"	⅞"	11/16"	6½"	⅝"	½"
x63	10"	⅝"	½"	6½"	½"	⅜"
x53	10"	⅝"	½"	6½"	½"	⅜"
HP 10x57	8"	¾"	9/16"	5¼"	½"	⅜"
x42	8"	⅝"	9/16"	5¼"	½"	⅜"
HP 8x36	7"	⅝"	7/16"	4¼"	½"	⅜"

WELDED PLATE FIELD SPLICE

Note:
The steel H-piles shall be according to AASHTO M270 Grade 50.

* Interrupt welds ¼" from end of web and/or each flange.

** Remove portions of backup plates that extend outside the flanges.

*** Weld size per pile shoe manufacturer (5/16" min.).

F-HP 1-1-2020

ILLINOIS DEPARTMENT OF TRANSPORTATION
District Nine Materials

Bridge Foundation
Boring Log
Sheet 1 of 1

FAI Route 57 Over FAS 819
Route: FAI 57 Structure Number: 041-0014 (NB) and 041-0015 (SB) Date: 4/18/2017
Section 41, 4HB2 Bored By: R Moberly
County: Jefferson Location: Dix Interchange Checked By: R Moberly

Boring No 1-S (2017)
Station 1240+29
Offset 82' Lt CL
Ground Surface 555.7 Ft

Surf Wat Elev:
Ground Water Elevation
when Drilling 538.2
At Completion
At: Hrs:

Description	Elev.	DEPTH	BLOWS	Qu tsf	W%
Asphalt shoulder	554.7				
Stiff, moist, grey, Clay A7-6			1		
			2	1.5B	20
			2		
	551.2				
Medium, very moist, grey, Silty Clay to Clay A-6		5.0	2		
			3	0.9B	23
			4		
	548.7				
Stiff, moist, grey mottled brown, Silty Clay A-6			1		
			3	1.1B	19
			3		
	546.2				
Stiff, moist, brown mottled grey, Clay A7-6		10.0	2		
			3	1.7B	21
			4		
	543.7				
Very stiff, moist, brown mottled grey, Clay A7-6			2		
			4	2.3B	27
			6		
	541.2				
Stiff, moist, grey, Clay to Silty Clay A7-6		15.0	1		
			3	1.3B	21
			4		
	538.7				
Very stiff, damp to moist, grey and brown, Clay A7-6			2		
			10	2.7S	28
			18		
	535.7	20.0	8		
Hard, dry to damp, grey, weathered Clay Shale			22		28
			18		
	533.2		12		
Hard, dry, black, Coal			100/8"		
	531.2				
Hard, dry, grey, Clay Shale		25.0	100/4"		
Hard, dry, grey, Clay Shale					
			18		
	522.7		100/6"		
Bottom of hole = 33.0 feet		35.0			
Free water observed at 17.5 feet					
Elevation referenced to BM at NE wingwall SN 041-0014; Elevation = 577.3 feet					
Borehole advanced with hollow stem auger (8" O.D, 3.25" I.D.)		40.0			
To convert "N" values to "N60" multiply by 1.25					
		45.0			
		50.0			

N-Std Pentr Test: 2" OD Sampler,140# Hammer, 30" Fall (Type Fail. B-Bulge S-Shear E-Estimated P-Penetrometer)

LIN ENGINEERING, LTD.
Consulting Engineers

ILLINOIS DEPARTMENT OF TRANSPORTATION
District Nine Materials

Bridge Foundation
Boring Log
Sheet 1 of 1

FAI Route 57 Over FAS 819
Route: FAI 57 Structure Number: 041-0014 (NB) and 041-0015 (SB) Date: 4/18/2017
Section 41, 4HB2 Bored By: R Moberly
County: Jefferson Location: Dix Interchange Checked By: R Moberly

Boring No 2-S (2017)
Station 1239+26
Offset 88' Rt CL Median
Ground Surface 554.5 Ft

Surf Wat Elev:
Ground Water Elevation
when Drilling 539.5
At Completion
At: Hrs:

Description	Elev.	DEPTH	BLOWS	Qu tsf	W%
Asphalt shoulder	553.5				
Very stiff, moist, brown, Clay A7-6			1		
			2	2.1B	21
			3		
	550.0				
Stiff, moist, grey, Silty Clay A-6		5.0	1		
			3	1.4B	22
			3		
	547.5				
Stiff, moist, grey mottled brown, Clay to Silty Clay A7-6			1		
			3	1.8B	20
			5		
		10.0	1		
			3	1.3B	19
			3		
			2		
			5	1.7B	22
			7		
	540.0				
Very stiff, damp to moist, brown, Clay to weathered Clay Shale		15.0	1		
			6	3.5S	22
			11		
	537.0		10		
Hard, dry, grey, Clay Shale			100/9"		
	535.5				
Very stiff, dry, grey, weathered Clay Shale		20.0	14		
			16		
	533.5		16		
Hard, dry, black, Coal	532.5				
Hard, dry, grey, Clay Shale			25		
			100/4"		
		25.0	100/4"		
Hard, dry, grey, Clay Shale					
	524.5	30.0	100/2"		
Bottom of hole = 29.8 feet					
Free water observed at 15.0 feett					
Elevation referenced to BM at NE wingwall SN 041-0014; Elevation = 577.3 feet		35.0			
Borehole advanced with hollow stem auger (8" O.D, 3.25" I.D.)					
To convert "N" values to "N60" multiply by 1.25					
		40.0			
		50.0			

N-Std Pentr Test: 2" OD Sampler,140# Hammer, 30" Fall (Type Fail. B-Bulge S-Shear E-Estimated P-Penetrometer)

LIN ENGINEERING, LTD.
Consulting Engineers

ILLINOIS DEPARTMENT OF TRANSPORTATION
District Nine Materials

Bridge Foundation Boring Log
Sheet 1 of 1

FAI Route 57 Over FAS 819
Route: FAI 57 Structure Number: 041-0014 (NB) and 041-0015 (SB) Date: 4/19/2017
Section 41, 4HB2 Bored By: R Moberly
County: Jefferson Location: Dix Interchange Checked By: R Moberly

Boring No 3-S (2017)
Station 1238+95
Offset 10' Lt CL Median
Ground Surface 571.3 Ft

Surf Wat Elev:
Ground Water Elevation
when Drilling 539.3
At Completion
At: 551.9 Hrs: 144

Description	Depth	Blows	Qu tsf	W%
Very stiff, moist, brown, Clay to Silty Clay A7-6		2 / 4 / 4	2.9S	16
	5.0	2 / 4 / 5	2.7B	20
	10.0	1 / 3 / 4	2.3B	19
		4 / 4	2.0B	21
559.3 Stiff, moist, grey, Silty Clay Loam A-4		2 / 3 / 5	1.3S	20
556.8 Stiff, moist, grey mottled brown, Silty Clay to Silty Clay Loam A-6	15.0	1 / 3 / 3	1.6B	21
554.3 Very stiff, moist, brown and grey, Clay A7-6		1 / 3 / 5	2.3B	26
	20.0	1 / 4 / 6	2.5S	25
549.3 Stiff, moist, grey mottled brown, Silty Clay to Clay A7-6		1 / 2 / 3	1.6B	20
546.8	25.0	1		

Description	Depth	Blows	Qu tsf	W%
Very stiff, moist, grey and brown, Clay A7-6		3 / 4	2.1B	20
		1 / 3 / 4	2.1B	21
541.8 Very soft, wet, brown, Sandy Clay Loam to Clay Loam A-4	30.0	1 / 3 / 3	0.2E	22
539.3 Very stiff, damp, brown and grey, Clay Loam to weathered Clay Shale		5 / 13 / 20	3.9S	13
536.3 Hard, dry, grey, Clay Shale	35.0	19 / 100/10"		
++++++++++++++++++++++++++ Elevation referenced to BM at NE wingwall SN 041-0014; Elevation = 577.3 feet	40.0	100/2"		
Borehole advanced with hollow stem auger (8" O.D, 3.25" I.D.)				
To convert "N" values to "N60" multiply by 1.25 ++++++++++++++++++++++++++				
Hard, dry, grey, Clay Shale	45.0	22 / 100/4"		
525.8				
Bottom of hole = 45.3 feet				
Free water observed at 32.0 feet				

N-Std Pentr Test: 2" OD Sampler,140# Hammer, 30" Fall (Type Fail. B-Bulge S-Shear E-Estimated P-Penetrometer)

LIN ENGINEERING, LTD.
Consulting Engineers

Exhibit D - Soil Borings

Form No. B.D. 137 Rev. 9-60 041-0014/15 Sh. 1 of 8

BRIDGE FOUNDATION BORING LOG

PROJECT
ROUTE FAI 57
SEC. 41-4HB-2
COUNTY Jefferson
Boring No. 1
Station 1240+31
Offset 47' Rt. ℄

BRIDGE FAI Rt. 57 over C.H. # 12A
STA. 1239+78.86

Date January 7, 1964
Bored By G.M. Broom
Checked By J.J. Klay

Surface Water El. —
Groundwater El. at Completion none
After 48 Hours 545.0

Description	Elevation	N	Qu t/s.f.	w (%)
Ground Surface	553.3 0			
Very stiff to hard grey mottled brown SILTY CLAY		7	1.5 E	24
		25	9.3 S	12
548.3 -5 Hard grey mottled brown CLAY		28	4.3 S	13
545.3 Very stiff to stiff grey mottled brown CLAY	-10	14	2.3 B	20
		14	2.1 B	17
538.8 -15 Hard grey SHALE		20	1.8 B	18
		200		11
534.8 Hard black COAL				
533.3 -20 Extent of Exploration.		290		27

Elevation: -25, -30, -35, -40, -45

Standard Penetration Test – Blows per foot to drive 2" O.D. Split Spoon Sampler 12" with Hammer falling 30".

Qu – Unconfined Compressive Strength – t/sf
w – Water Content – percentage

Type failure:
B – Bulge Failure
S – Shear Failure
E – Estimated Value

LIN ENGINEERING, LTD.
Consulting Engineers

Exhibit D - Soil Borings

MODEL: Default
FILE NAME: L:\DOT\1806810\WO_8\Draw\Structures\034-Boring Log 2.dgn

CMT
License No. 184-000613
© Copyright CMT, Inc.

USER NAME = Derek Cochran	DESIGNED - AI	REVISED -	
	CHECKED -	REVISED -	
PLOT SCALE = N/A	DRAWN - GLD	REVISED -	
PLOT DATE = 3/5/2021 (8:05:52 AM)	CHECKED -	REVISED -	

STATE OF ILLINOIS
DEPARTMENT OF TRANSPORTATION

BORING LOG 2
STRUCTURE NO. 041–0115 (NB) & 041–0116 (SB)
SHEET 33 OF 37 SHEETS

F.A.I. RTE.	SECTION	COUNTY	TOTAL SHEETS	SHEET NO.
57	(41-4)B-2	JEFFERSON	257	135
		CONTRACT NO. 78550		
	ILLINOIS	FED. AID PROJECT		

Form No. B.D. 137 Rev. 9-60 — 041-0014/15 — Sh. 2 of 8

BRIDGE FOUNDATION BORING LOG

PROJECT ____ BRIDGE FAI Rt. 57 over C.H. # 12A — Date January 7, 1964.
ROUTE FAI 57 — Bored By G.M. Broom
SEC. 41-4HB-2 — STA. 1239+78.86 — Checked By J.J. Klay
COUNTY Jefferson

Boring No. 2
Station 1239+87
Offset 47' Rt. ℄

Surface Water El. ____
Groundwater El. at Completion 533.7
After 24 Hours 546.4

Description	Elevation	N	Qu t/s.f.	w (%)
Ground Surface	549.2			
Stiff to very stiff grey mottled brown CLAY	0			
		12	1.5 E	16
	-5			
		15	2.5 B	23
	-10	13	1.9 B	18
	538.2			
Hard brownish grey SHALE		105		9
	-15	200		10
	533.2			
Hard black COAL	532.2	310		14
Extent of Exploration	-20			

Elevation: -25, -30, -35, -40, -45

N – Standard Penetration Test – Blows per foot to drive 2" O.D. Split Spoon Sampler 12" with 140# hammer falling 30".

Qu – Unconfined Compressive Strength – t/sf

w – Water Content – percentage

Type failure:
B – Bulge Failure
S – Shear Failure
E – Estimated Value

LIN ENGINEERING, LTD. Consulting Engineers

Exhibit D - Soil Borings

Form No. B.D. 137 Rev. 9-60 — 041-0014/15 — Sh. 3 of 8

BRIDGE FOUNDATION BORING LOG

PROJECT ____ BRIDGE FAI Rt. 57 over C.H. # 12A — Date January 8, 1964.
ROUTE FAI 57 — Bored By G.M. Broom
SEC. 41-4HB-2 — STA. 1239+78.86 — Checked By J.J. Klay
COUNTY Jefferson

Boring No. 3
Station 1240+11
Offset 47' Lt. ℄

Surface Water El. ____
Groundwater El. at Completion 539.8
After 24 Hours 548.4

Description	Elevation	N	Qu t/s.f.	w (%)
Ground Surface	550.3			
	0			
		8	1.3 S	18
	-5	11	1.7 B	19
		11	1.8 B	24
	542.3			
Very stiff grey mottled brown CLAY	-10	10	2.1 B	18
	539.8			
Very stiff brownish grey weathered SHALE	538.3	30	2.1 B	25
Hard brownish grey SHALE	-15	400		10
	533.8			
Hard black COAL	532.8	320		27
Extent of Exploration	-20			

Elevation: -25, -30, -35, -40, -45

N – Standard Penetration Test – Blows per foot to drive 2" O.D. Split Spoon Sampler 12" with 140# hammer falling 30".

Qu – Unconfined Compressive Strength – t/sf

w – Water Content – percentage

Type failure:
B – Bulge Failure
S – Shear Failure
E – Estimated Value

LIN ENGINEERING, LTD. Consulting Engineers

Exhibit D - Soil Borings

MODEL: Default
FILE NAME: L:\IDOT\19\06810\WQ_ID\Draw\Structures\035-Boring Log 3.dgn

CMT — License No. 184-000613 — © Copyright CMT, Inc.

USER NAME = Derek Cochran	DESIGNED - AI	REVISED -	
	CHECKED -	REVISED -	
PLOT SCALE = N/A	DRAWN - GLD	REVISED -	
PLOT DATE = 3/5/2021 (8:06:00 AM)	CHECKED -	REVISED -	

STATE OF ILLINOIS
DEPARTMENT OF TRANSPORTATION

BORING LOG 3
STRUCTURE NO. 041–0115 (NB) & 041–0116 (SB)
SHEET 34 OF 37 SHEETS

F.A.I. RTE.	SECTION	COUNTY	TOTAL SHEETS	SHEET NO.
57	(41-4)B-2	JEFFERSON	257	136
		CONTRACT NO. 78550		
	ILLINOIS	FED. AID PROJECT		

FORM No. B.D. 137 Rev. 9-60 041-0014/15 Sh. 4 of 8

BRIDGE FOUNDATION BORING LOG

PROJECT
ROUTE FAI 57
SEC. 41-4HB-2
COUNTY Jefferson
Boring No. 4
Station 1239+47
Offset 47' Rt. ℄

BRIDGE FAI Rt. 57 over C.H. # 12A
STA. 1239+78.86

Date January 8, 1964.
Bored By G.M. Broom
Checked By J.J. Klay

Surface Water El. –
Groundwater El. at Completion none
After 24 Hours 547.9

Description	Elevation	N	Qu t/s.f.	w (%)
Ground Surface	548.7			
Stiff to very stiff grey mottled brown CLAY	0			
		7	1.5 E	18
	-25			
		11	2.7 BS	18
	-5			
		14	2.1 B	17
	-30			
		15	2.5 BS	18
	-10			
	537.7			
Hard brownish grey SHALE		140		1[illegible]
	-35			
	534.7			
Hard black COAL		150		28
	-15			
	533.2			
Hard grey SHALE				
	531.7	390		9
Extent of Exploration	-40			
	-20			
	-45			

N – Standard Penetration Test – Blows per foot to drive 2" O.D. Split Spoon Sampler 12" with 140# hammer falling 30".

Qu – Unconfined Compressive Strength – t/sf

w – Water Content – percentage

Type failure:
B – Bulge Failure
S – Shear Failure
E – Estimated Value

LIN ENGINEERING, LTD. Consulting Engineers

Exhibit D - Soil Borings

FORM No. B.D. 137 Rev. 9-60 041-0014/15 Sh. 5 of 8

BRIDGE FOUNDATION BORING LOG

PROJECT
ROUTE FAI 57
SEC. 41-4HB-2
COUNTY Jefferson
Boring No. 5
Station 1239+71
Offset 47' Lt. ℄

BRIDGE FAI Rt. 57 over C.H. # 12A
STA. 1239+78.86

Date January 8, 1964.
Bored By G.M. Broom
Checked By J.J. Klay

Surface Water El. –
Groundwater El. at Completion 532.7
After 24 Hours 548.0

Description	Elevation	N	Qu t/s.f.	w (%)
Ground Surface	549.7			
Very stiff to stiff grey mottled brown CLAY	0			
	-25			
		11	2.4 B	20
	-5			
		15	1.9 S	21
	-30			
		14	1.8 B	17
	-10			
	538.2			
Hard brownish grey SHALE		60		1[illegible]
	-35			
		210		10
	-15			
	533.7			
Hard black COAL				
	532.2			
Hard, grey SHALE				
	530.2			
Extent of Exploration	-20			
	-40			
	-45			

Flight Augers

N – Standard Penetration Test – Blows per foot to drive 2" O.D. Split Spoon Sampler 12" with [illegible] 30".

Qu – Unconfined Compressive Strength – t/sf

w – Water Content – percentage

Type failure:
B – Bulge Failure
S – Shear Failure
E – Estimated Value

LIN ENGINEERING, LTD. Consulting Engineers

Exhibit D - Soil Borings

MODEL: Default
FILE NAME: L:\BDOT\1906810\WO_8\Draw\Structures\036-Boring Log 4.dgn

CMT
License No. 184-000613
© Copyright CMT, Inc.

USER NAME = Derek Cochran	DESIGNED - AI	REVISED -	
	CHECKED -	REVISED -	
PLOT SCALE = N/A	DRAWN - GLD	REVISED -	
PLOT DATE = 3/5/2021 (8:06:09 AM)	CHECKED -	REVISED -	

STATE OF ILLINOIS
DEPARTMENT OF TRANSPORTATION

BORING LOG 4
STRUCTURE NO. 041–0115 (NB) & 041–0116 (SB)
SHEET 35 OF 37 SHEETS

F.A.I. RTE.	SECTION	COUNTY	TOTAL SHEETS	SHEET NO.
57	(41-4)B-2	JEFFERSON	257	137
		CONTRACT NO. 78550		
	ILLINOIS	FED. AID PROJECT		

FORM No. B.D. 137 REV. 9-60 — 041-0014/15 — Sh. 6 of 8

BRIDGE FOUNDATION BORING LOG

PROJECT
ROUTE FAI 57
SEC. 41-4HB-2
COUNTY Jefferson
Boring No. 6
Station 1240+60
Offset 47' Lt. ℄

BRIDGE FAI Rt. 57 over CH # 12A
STA. 1239+78.86

Date January 10, 1964
Bored By G.M. Broom
Checked By J.J. Klay

Surface Water El. ——
Groundwater El. at Completion 533.7
After ___ Hours ___

Elevation	N	Qu t/s.f.	w (%)
Ground Surface 553.2 (0)			
Very stiff grey mottled brown SILTY CLAY 551.2	12	1.5 E	22
Very stiff grey mottled brown CLAY	19	2.2 S	18
(-5)			
	16	2.7 B	17
(-10)	14	1.9 B	20
	12	2.3 B	18
539.2	44		14
(-15) Hard, brownish grey SHALE			
	43		19
535.2			
Hard black COAL 533.7	450		23
(-20) Hard grey LIMESTONE	Flight Augers		
* 1" penetration for 150 blows.			

Elevation	N
Hard grey LIMESTONE 530.2	*
Extent of Exploration	
(-25)	
(-30)	
(-35)	
(-40)	
(-45)	

N – Standard Penetration Test – Blows per foot to drive 2" O.D. Split Spoon Sampler 12" with 140 lb hammer falling 30".

Qu – Unconfined Compressive Strength – t/sf

w – Water Content – percentage of oven dry weight – %

Type failure:
B – Bulge Failure
S – Shear Failure
E – Estimated Value

LIN ENGINEERING, LTD. Consulting Engineers

Exhibit D - Soil Borings

FORM No. B.D. 137 REV. 9-60 — 041-0014/15 — Sh. 7 of 8

BRIDGE FOUNDATION BORING LOG

PROJECT
ROUTE FAI 57
SEC. 41-4HB-2
COUNTY Jefferson
Boring No. 7
Station 1238+95
Offset 47' Rt. ℄

BRIDGE FAI Rt. 57 over CH # 12A
STA. 1239+78.86

Date January 14, 1964.
Bored By R.C. Dietzen
Checked By J.J. Klay

Surface Water El. ——
Groundwater El. at Completion 545.0
After 24 Hours 545.8

Elevation	N	Qu t/s.f.	w (%)
Ground Surface 552.4 (0)			
Stiff to very stiff grey mottled brown SILTY CLAY LOAM to SILTY CLAY	15	1.5 E	17
	14	2.6 S	16
(-5) 546.9			
Very stiff grey mottled brown CLAY	17	2.5 B	19
	19	3.4 B	16
(-10) 540.9			
Medium brown SANDY CLAY	17	0.7 S	20
539.4			
Water bearing brown SAND 538.4			
Stiff brown CLAY TILL	43	1.4 S	17
(-15) 536.1			
Dense brown fossiliferous SHALE	48		25
534.4			
Very dense black COAL	336		19
532.4 (-20)			
Very dense grey silty SHALE	300		9

Elevation	N
Very dense grey silty SHALE	
* 1 inch penetration for 50 blows. 527.9	*
Extent of Exploration.	
(-25)	
(-30)	
(-35)	
(-40)	
(-45)	

N – Standard Penetration Test – Blows per foot to drive 2" O.D. Split Spoon Sampler 12" with 140 lb hammer falling 30".

Qu – Unconfined Compressive Strength – t/sf

w – Water Content – percentage of oven dry weight – %

Type failure:
B – Bulge Failure
S – Shear Failure
E – Estimated Value

LIN ENGINEERING, LTD. Consulting Engineers

Exhibit D - Soil Borings

MODEL: Default
FILE NAME: L:\IDOT\1900610\WO_6\Draw\Structures\037-4\Boring Log 5.dgn

CMT — License No. 184-000613 — © Copyright CMT, Inc.

USER NAME = Derek Cochran	DESIGNED - AI	REVISED -	
	CHECKED -	REVISED -	
PLOT SCALE = N/A	DRAWN - GLD	REVISED -	
PLOT DATE = 3/5/2021 (8:06:18 AM)	CHECKED -	REVISED -	

STATE OF ILLINOIS
DEPARTMENT OF TRANSPORTATION

BORING LOG 5
STRUCTURE NO. 041–0115 (NB) & 041–0116 (SB)
SHEET 36 OF 37 SHEETS

F.A.I. RTE.	SECTION	COUNTY	TOTAL SHEETS	SHEET NO.
57	(41-4)B-2	JEFFERSON	257	138
		CONTRACT NO. 78550		
		ILLINOIS FED. AID PROJECT		

Form No. B.D. 137 Rev. 9-60

041-0041/15

Sh. 8 of 8

BRIDGE FOUNDATION BORING LOG

PROJECT:
ROUTE FAI 57
SEC. 41-4HB-2
COUNTY Jefferson
Boring No. 8
Station 1239+08
Offset 47' Lt. ℄

BRIDGE FAI Rt. 58 over CH # 12A
STA. 1239+78.86

Date January 15, 1964
Bored By R.C. Dietzen
Checked By J.J. Klay

Surface Water El. ——
Groundwater El. at Completion 546.8
After 24 Hours 546.4

Description	Elevation	N	Qu t/s.f.	w (%)
Ground Surface	553.7			
Medium to very stiff grey SILTY CLAY LOAM to SILTY CLAY	0	6	0.9 S	19
		12	2.4 S	14
	548.7 -5			
Stiff grey SILTY CLAY		12	1.8 B	20
	546.2			
Very stiff to stiff brown CLAY TILL to SANDY CLAY TILL		16	2.2 B	17
Free water encountered at elevation 541.2.	-10			
		16	1.8 S	22
	541.2			
Very soft brown SAND to SANDY LOAM		10		24
	-15 538.2			
Very dense brown SHALE		60		12
	535.2			
Very dense black COAL		200		33
	533.7 -20			
Very dense grey shaley SILTSTONE		400		7
	531.2			
Very dense grey SHALE	531.2			
* 2" penetration for 100 blows	529.2	*		
Extent of Exploration	-25			
	-30			
	-35			
	-40			
	-45			

N – Standard Penetration Test – blows per foot to drive 2" O.D. Split Spoon Sampler 12" with 140# hammer falling 30".

Qu – Unconfined Compressive Strength – t/sf

w – Water Content – percentage

Type failure:
B – Bulge Failure
S – Shear Failure
E – Estimated Value

LIN ENGINEERING, LTD.
Consulting Engineers

Exhibit D - Soil Borings

MODEL: Default
FILE NAME: L:\BDOT\190610\WQ_IL\Draw\Structures\039-Boring Log 6.dgn

CMT
License No. 184-000613
© Copyright CMT, Inc.

USER NAME = Derek Cochran	DESIGNED - AI	REVISED -
	CHECKED -	REVISED -
PLOT SCALE = N/A	DRAWN - GLD	REVISED -
PLOT DATE = 3/5/2021 (8:06:27 AM)	CHECKED -	REVISED -

STATE OF ILLINOIS
DEPARTMENT OF TRANSPORTATION

BORING LOG 6
STRUCTURE NO. 041–0115 (NB) & 041–0116 (SB)
SHEET 37 OF 37 SHEETS

F.A.I. RTE.	SECTION	COUNTY	TOTAL SHEETS	SHEET NO.
57	(41-4)B-2	JEFFERSON	257	139
		CONTRACT NO. 78550		
	ILLINOIS	FED. AID PROJECT		

BENCHMARK: BM 630 – Cut square on N.E. wingwall of SN 041-0016, along NBL I-57 over railroad.
Sta. 1253+50.00, Elev. 590.85

EXISTING STRUCTURES:
SN 041-0016 (NB) and SN 041-0017 (SB) were originally constructed in 1967 as F.A.I. 57, Section (41-4)VB. The three-span structures consist of concrete decks supported by rolled steel beams. The beams are supported by concrete column piers and stub abutments. All abutments are supported by steel piles. All piers are supported by spread footings. Back to back abutments is 213'-0". The superstructure width at both structures is 42'-0" out-to-out deck. The skew is 40°-34'-13". Interstate traffic will be maintained utilizing crossovers.

No salvage.

Up to ¼" may be ground off the bridge deck, the bridge approach slabs, and the pavement connectors.

No freefall deck drains will be permitted in the span over the tracks or within 10 ft. of cross arms of a railroad pole line.

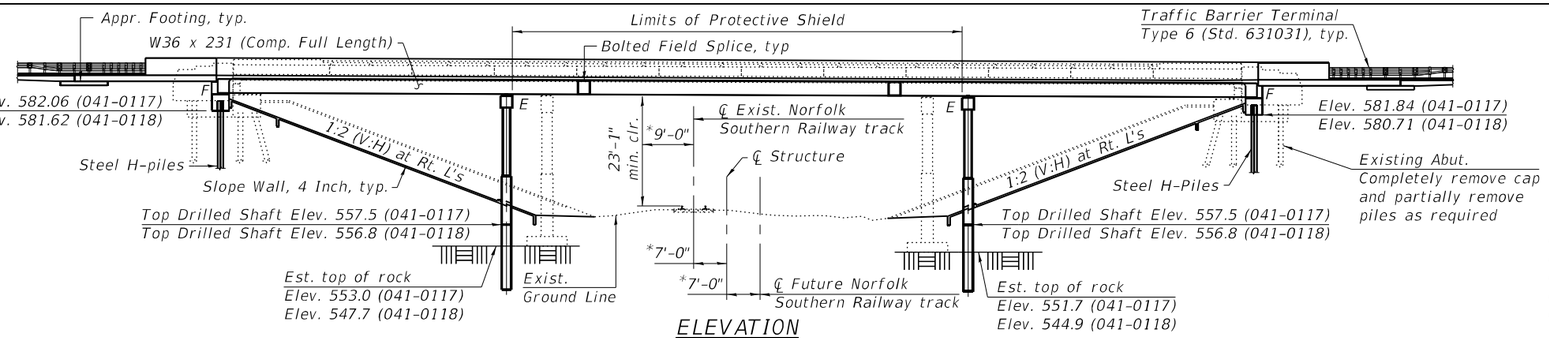

ELEVATION

(Showing SN 041-0118, SN 041-0117 similar)
*At Rt. L's to track

LOADING HL-93

Allow 50 psf for future wearing surface

DESIGN SPECIFICATIONS

2017 AASHTO LRFD
Bridge Design Specifications,
Customary U.S. Units, 8th Edition

DESIGN STRESSES

FIELD UNITS

f'c = 3,500 psi (Substructure)
f'c = 4,000 psi (Superstructure)
fy = 36,000 psi (AASHTO M270 Grade 36)
fy = 50,000 psi (AASHTO M270 Grade 50)
fy = 60,000 psi (Reinforcement)

SEISMIC DATA

Seismic Performance Zone (SPZ) = 2
Design Spectral Acceleration at 1.0 sec. (S_{D1}) = 0.209 g
Design Spectral Acceleration at 0.2 sec. (S_{DS}) = 0.60 g
Site Soil Class = C

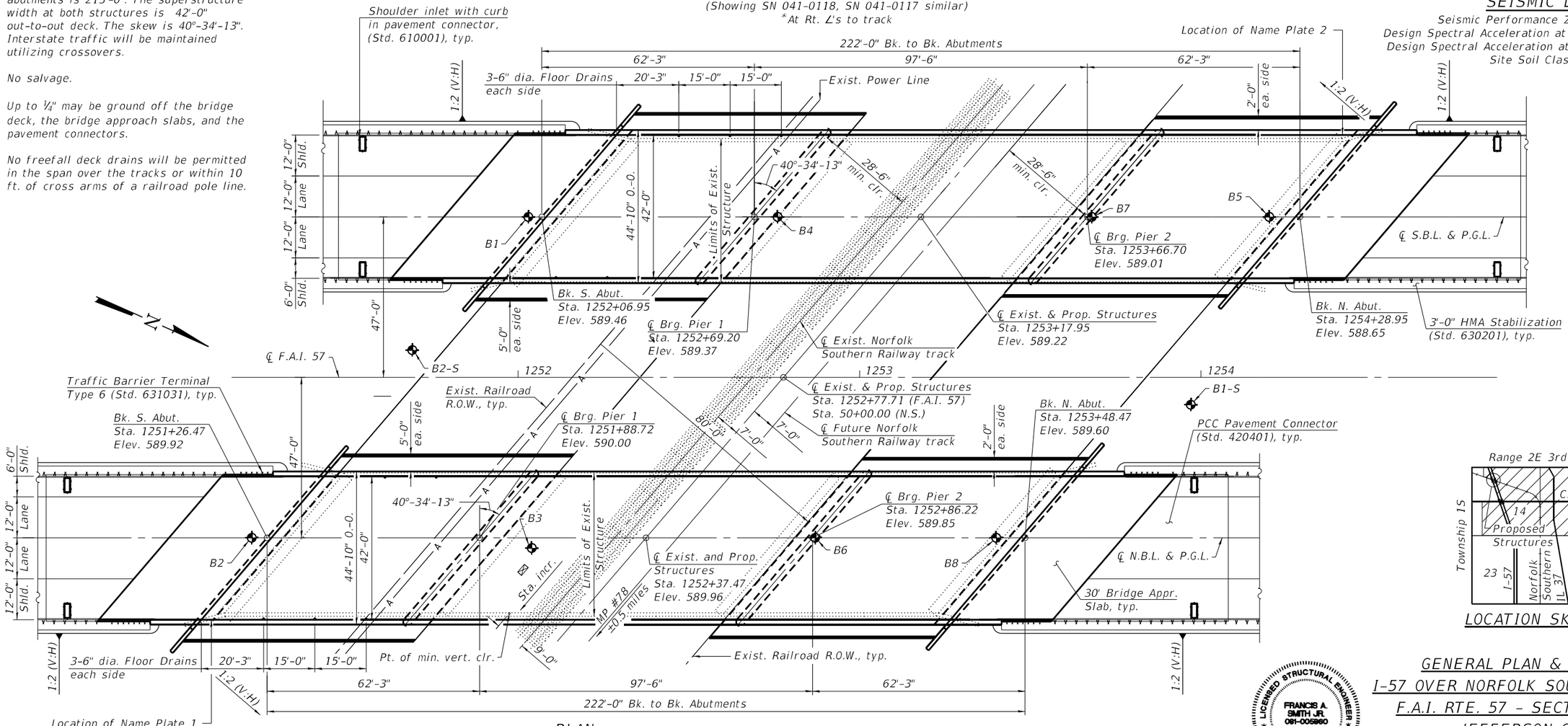

PLAN

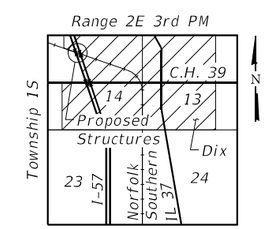

LOCATION SKETCH

APPROVED
For Structural Adequacy Only
Engineer of Bridges & Structures

LICENSED STRUCTURAL ENGINEER
FRANCIS A. SMITH JR.
081-005860
STATE OF ILLINOIS

Expiration Date: November 30, 2022
3/17/21

GENERAL PLAN & ELEVATION
I-57 OVER NORFOLK SOUTHERN RAILWAY
F.A.I. RTE. 57 – SECTION (41-4)B-1
JEFFERSON COUNTY
STATION 1252+77.71
STRUCTURE NO. 041-0117 (NB)
STRUCTURE NO. 041-0118 (SB)

CMT
License No. 184-000613

USER NAME = Albert Reinwart	DESIGNED - AFR	REVISED -	
	CHECKED - FAS	REVISED -	
PLOT SCALE = N/A	DRAWN - GLD	REVISED -	
PLOT DATE = 4/30/2021 (11:59:34 AM)	CHECKED - FAS	REVISED -	

STATE OF ILLINOIS
DEPARTMENT OF TRANSPORTATION

GENERAL PLAN & ELEVATION
STRUCTURE NO. 041-0117 (N.B.) & 041-0118 (S.B.)
SHEET 1 OF 38 SHEETS

F.A.I. RTE.	SECTION	COUNTY	TOTAL SHEETS	SHEET NO.
57	(41-4)B-1	JEFFERSON	257	140
		CONTRACT NO. 78550		
	ILLINOIS	FED. AID PROJECT		

MODEL: Default
FILE NAME: L:\DOT\1990610\WO_8\Draw\Structures\SN 17-18\001-General P & E.dgn

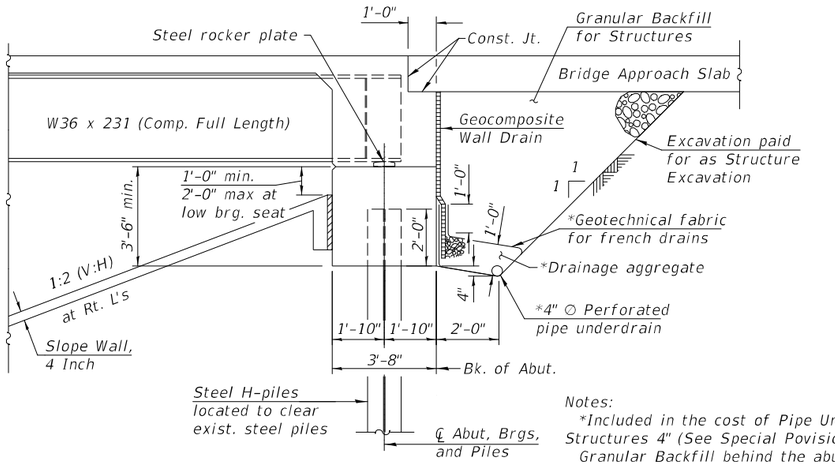

SECTION THROUGH ABUTMENT

(Horizontal dimensions at Rt. L's)

Notes:

*Included in the cost of Pipe Underdrain for Structures 4" (See Special Povisions).

Granular Backfill behind the abutments shall be compacted to Article 205.06 of the Standard Specifications.

All drainage system components shall extend 2'-0" from end of wing wall (as shown in Sheet 4 of 38) except an outlet pipe shall extend until intersecting with the side slopes. The pipes shall drain into concrete headwalls. (See Article 601.05 of the Standard Specifications and highway Standard 601101).

TOTAL BILL OF MATERIAL (S.N. 041-0117)

ITEM	UNIT	SUPER	SUB	TOTAL
Removal of Existing Structures No. 3	Each	1		1
Protective Shield	Sq. Yd.	375		375
Structure Excavation	Cu. Yd.		629	629
Floor Drains	Each	6		6
Concrete Structures	Cu. Yd.		518.4	518.4
Concrete Superstructure	Cu. Yd.	387.0		387.0
Protective Coat	Sq. Yd.	1,573		1,573
Concrete Superstructure (Approach Slab)	Cu. Yd.	124.6		124.6
Furnishing and Erecting Structural Steel	L. Sum	0.25		0.25
Stud Shear Connectors	Each	7,704		7,704
Reinforcement Bars, Epoxy Coated	Pound	98,600	165,130	263,730
Slope Wall, 4 Inch	Sq. Yd.		1,022	1,022
Furnishing Steel Piles HP 14x73	Foot		447	447
Driving Piles	Foot		447	447
Test Pile Steel HP 14x73	Each		1	1
Name Plates	Each	1		1
Drilled Shaft in Soil	Cu. Yd.		39.1	39.1
Drilled Shaft in Rock	Cu. Yd.		57.0	57.0
Elastomeric Bearing Assembly, Type I	Each		12	12
Anchor Bolts, 1"	Each		24	24
Anchor Bolts, 1¼"	Each		24	24
Granular Backfill for Structures	Cu. Yd.		203	203
Geocomposite Wall Drain	Sq. Yd.		109	109
Concrete Headwalls for Pipe Drains	Each		2	2
Pipe Underdrains 4" (Special)	Foot		19	19
Bridge Deck Grooving (Longitudinal)	Sq. Yd.	745		745
Deck Slab Repair (Full Depth, Type II)	Sq. Yd.	178.5		178.5
Deck Slab Repair (Partial)	Sq. Yd.	35.7		35.7
Diamond Grinding (Bridge Section)	Sq. Yd.	1,464		1,464
Pipe Underdrains for Structures 4"	Foot		164	164
Bridge Deck Concrete Crack Sealer	Foot	1000		1000

TOTAL BILL OF MATERIAL (S.N. 041-0118)

ITEM	UNIT	SUPER	SUB	TOTAL
Removal of Existing Structures No. 4	Each	1		1
Protective Shield	Sq. Yd.	375		375
Structure Excavation	Cu. Yd.		630	630
Floor Drains	Each	6		6
Concrete Structures	Cu. Yd.		517.9	517.9
Concrete Superstructure	Cu. Yd.	386.8		386.8
Protective Coat	Sq. Yd.	1,571		1,571
Concrete Superstructure (Approach Slab)	Cu. Yd.	124.6		124.6
Furnishing and Erecting Structural Steel	L. Sum	0.25		0.25
Stud Shear Connectors	Each	7,704		7,704
Reinforcement Bars, Epoxy Coated	Pound	98,600	173,850	272,450
Slope Wall, 4 Inch	Sq. Yd.		1,022	1,022
Furnishing Steel Piles HP 14x73	Foot		430	430
Driving Piles	Foot		430	430
Test Pile Steel HP 14x73	Each		1	1
Name Plates	Each	1		1
Drilled Shaft in Soil	Cu. Yd.		78.2	78.2
Drilled Shaft in Rock	Cu. yd.		57.0	57.0
Elastomeric Bearing Assembly, Type I	Each		12	12
Anchor Bolts, 1"	Each		24	24
Anchor Bolts, 1¼"	Each		24	24
Granular Backfill for Structures	Cu. Yd.		206	206
Geocomposite Wall Drain	Sq. Yd.		110	110
Concrete Headwalls for Pipe Drains	Each		2	2
Pipe Underdrains 4" (Special)	Foot		22	22
Bridge Deck Grooving (Longitudinal)	Sq. Yd.	745		745
Diamond Grinding (Bridge Section)	Sq. Yd.	1,464		1,464
Pipe Underdrains for Structures 4"	Foot		164	164

INDEX OF SHEETS

STATION 1252+37.47
BUILT 20__ BY
STATE OF ILLINOIS
F.A.I. RTE. 57-SECTION (41-4) B-1
LOADING HL-93
STRUCTURE NO. 041-0117

NAME PLATE 1

See Std. 515001

STATION 1253+17.95
BUILT 20__ BY
STATE OF ILLINOIS
F.A.I. RTE. 57-SECTION (41-4) B-1
LOADING HL-93
STRUCTURE NO. 041-0118

NAME PLATE 2

See Std. 515001

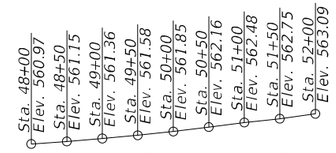

TRACK PROFILE GRADE

(Top of rail)

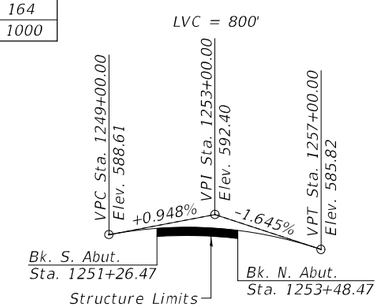

NBL PROFILE GRADE

(Along ℄ lanes)

(PG shows the final elevations after grinding)

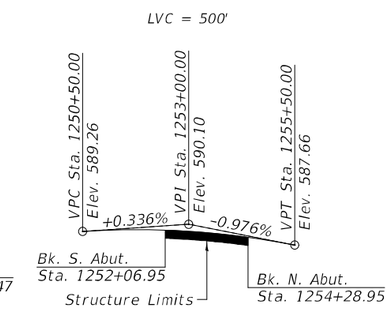

SBL PROFILE GRADE

(Along ℄ lanes)

(PG shows the final elevations after grinding)

GENERAL NOTES

1) Fasteners shall be ASTM F 3125 Grade A325 Type 1, mechanically galvanized bolts in painted areas. Bolts 7/8 in. dia., holes 15/16 in. dia., unless otherwise noted.

2) Calculated weight of Structural Steel (M270 Grade 50) = 312,460 pounds (041-0117)
Calculated weight of Structural Steel (M270 Grade 36) = 32,490 pounds (041-0117)
Calculated weight of Structural Steel (M270 Grade 50) = 312,460 pounds (041-0118)
Calculated weight of Structural Steel (M270 Grade 36) = 32,490 pounds (041-0118)

3) No field welding is permitted except as specified in the contract documents.

4) Reinforcement bars designated (E) shall be epoxy coated.

5) Bearing seat surfaces shall be constructed or adjusted to the designated elevations within a tolerance of ⅛ in. (0.01 ft.). Adjustment shall be made either by grinding the surface or by shimming the bearings.

6) The existing structural steel coating contains lead. The Contractor shall take appropriate precautions to deal with the presence of lead on this project.

7) The Organic Zinc Rich Primer/Epoxy/Urethane Paint System shall be used for painting of new structural steel except where otherwise noted. The entire system shall be shop applied, with the exception that masked off connection surfaces, field installed fasteners and damaged areas shall be touched up in the field. The color of the final finish coat for all interior steel surfaces shall be gray, Munsell No 5B 7/1. The color of the final finish coat for the exterior and bottom flange of the fascia beams shall be Blue, Munsell No. 10B 3/6.

8) Slip-forming of the Parapet is not allowed.

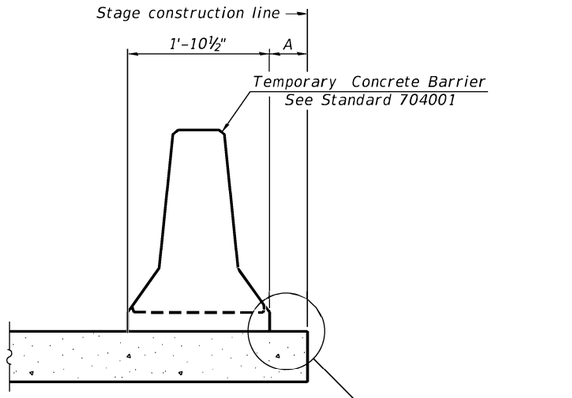

When "A" is 3'-1" or less, the temporary concrete barrier shall be restrained to the new slab according to Detail I, II or III. No restraint is required when "A" is greater than 3'-1".

NEW SLAB OR NEW DECK BEAM

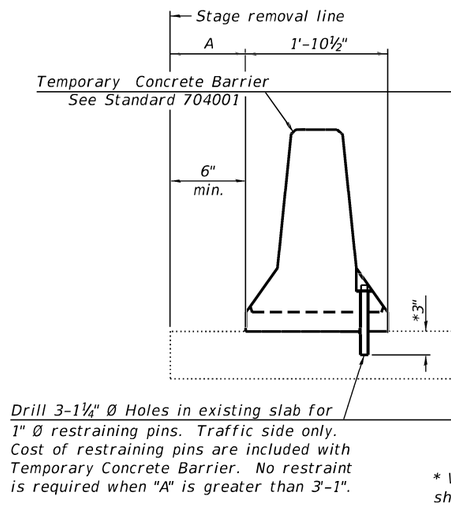

EXISTING SLAB

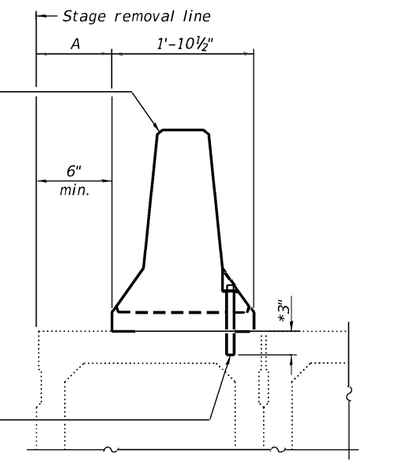

* When hot-mix asphalt wearng surface is present, embedment shall be 3" plus the wearing surface depth.

EXISTING DECK BEAM

SECTIONS THRU SLAB OR DECK BEAM

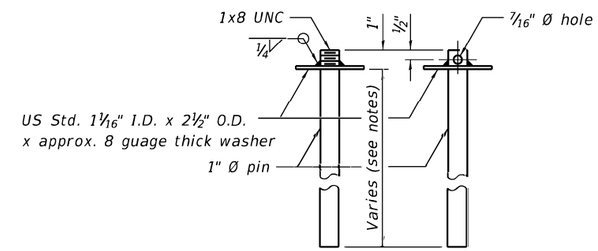

RESTRAINING PIN

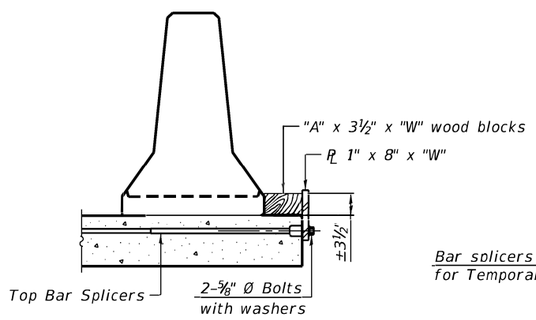

DETAIL I

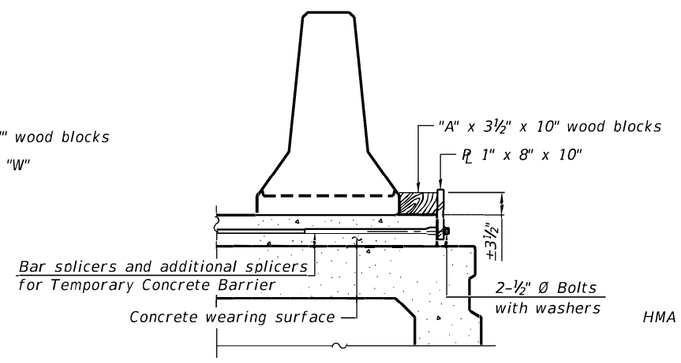

DETAIL II

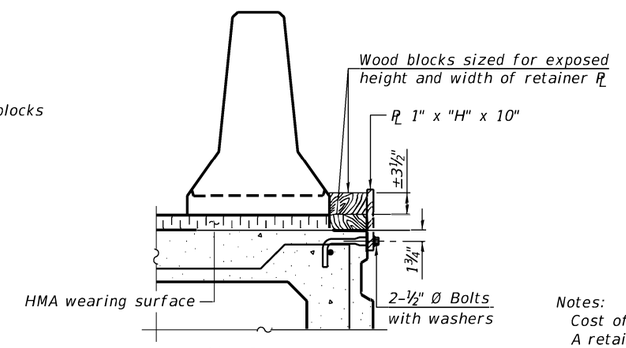

DETAIL III

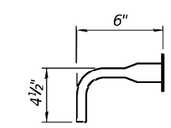

BAR SPLICER FOR #4 BAR - DETAIL III

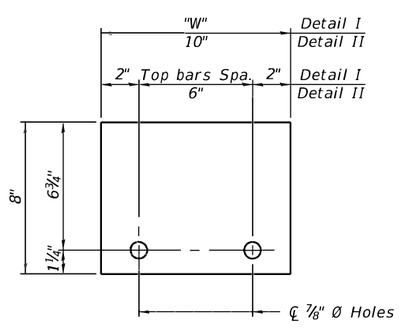

STEEL RETAINER PL 1" x 8" x "W"

(Detail I and II)

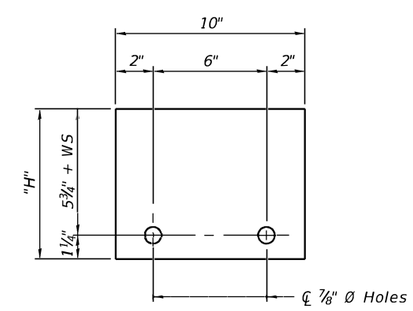

STEEL RETAINER PL 1" x "H" x 10"

(Detail III)

Notes:

Cost of retainer assembly is included with Temporary Concrete Barrier.

A retainer assembly shall be located at the approximate ℄ of each temporary concrete barrier.

The retainer plate shall not be removed until the concrete on the adjacent stage is ready to be poured. For Detail III applications the retainer plate shall not be removed until just prior to placing the adjacent beam.

When the 'A' dimension is less than 1½", the wood block shall be omitted and the barrier shall be placed in direct contact with the steel retainer plate. For deck beam applications the minimum required 'A' distance is 6" to accommodate the shear key clamping device.

Detail I - Installation for a new bridge deck or bridge slab.

Detail II - Installation for a new deck beam with an initial concrete wearing surface. Additional bar splicers shall be provided at 6'-0" centers and paired with the bar splicers of the concrete wearing surface reinforcement to accommodate the installation of the retainer assemblies. The cost of the additional bar splicers is included with the concrete wearing surface.

Detail III - Installation for a new deck beam with no initial wearing surface or with an initial hot-mix asphalt (HMA) wearing surface present. The deck beam directly beneath the temporary concrete barrier shall be fabricated with bar splicer inserts in the side of the beam, as detailed, to accommodate the installation of the retainer assemblies. A pair of bar splicers, 6" apart, shall be placed at 6'-0" centers along the length of the beam. The cost of the bar splicers is included with the deck beam.

REV. - MS

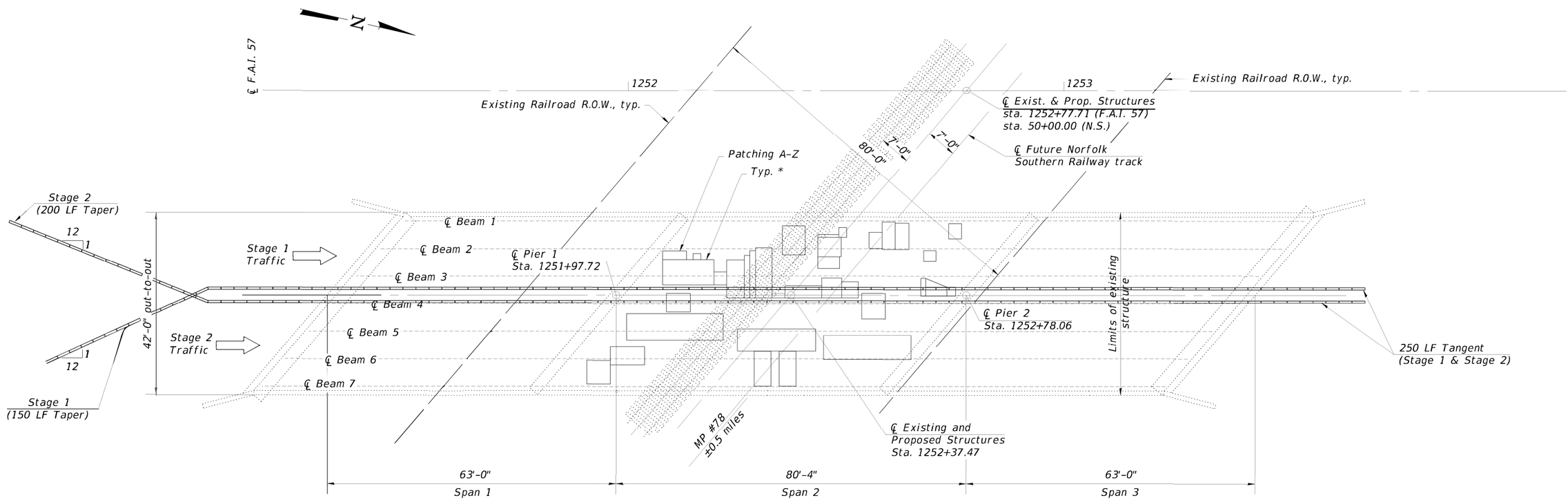

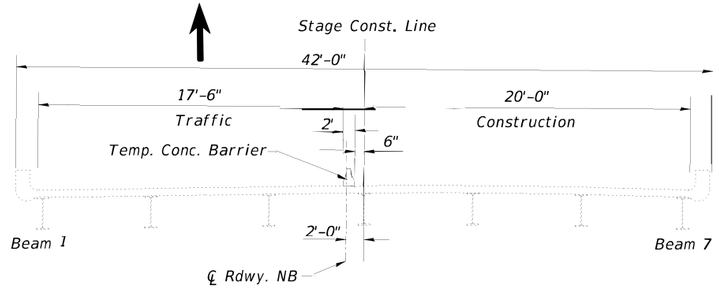

STAGE 1 (LOOKING NORTH)

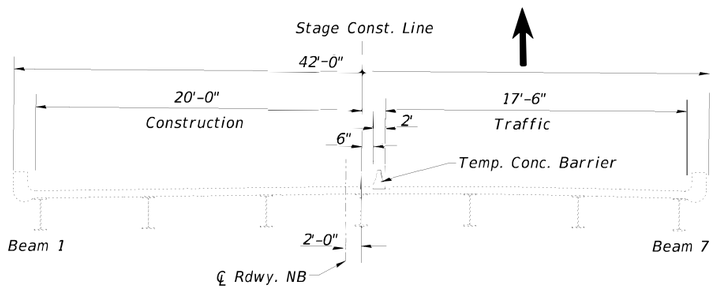

STAGE 2 (LOOKING NORTH)

NOTES:

*The Resident Engineer will determine final patch locations and quantities in the field before bridge deck patching operations begin. Locations shown are estimates only.

Pinning of temporary concrete barrier shall be in accordance per supplemental specs. Section 704 exept that pinning will not be measured for payment but shall be considered included in the cost for Temporary Concrete Barrier. Concrete barrier adjacent to full depth patches shall be pinned or secured per Std. Drawing R-27 on the previous sheet.

Existing reinforcement bars extending into the removal area shall be cleaned, straightened, and incorporated into the new construction. Any reinforcement bars that are damaged during concrete removal shall be replaced with an approved bar splicer or anchorage system. Cost included with Deck Slab Repair (Full Depth, Type II).

Protective Shield shall be placed the full out-to-out width of the bridge for the full length of Span 2 over Norfolk Southern Railroad.

Patching limited to Span 2 only. Spans 1 and 3 patching activities completed under previous Contract.

FULL DEPTH PATCHES
A) Wait times between adjacent longitudinal patches shall be 72 hrs.
B) A minimum of 10 ft. longitudinally shall remain in place between patches.
C) Transverse adjacent patches can be performed simultaneously.

HIGHWAY STANDARDS TO BE USED

000001-06	Standard Symbols, Abbreviations And Patterns
701101-05	Off-Rd Operations, Multilane, 15' To 24' From Pavement Edge
701106-02	Off-Rd Operations, Multilane, More Than 15' Away
701400-09	Approach To Lane Closure, Freeway/Expressway
701402-12	Lane Closure Freeway/Expressway, With Barrier
701411-09	Lane Closure, Multilane, At Entrance Or Exit Ramp, For Speeds > 45 MPH
701901-08	Traffic Control Devices

LEGEND

Full / Partial patching

BILL OF MATERIAL

ITEM	UNIT	QUANTITY
Deck Slab Repair (Full Depth, Type II)	Sq Yd	178.5
Deck Slab Repair (Partial)	Sq Yd	35.7
Protective Shield	Sq Yd	375
Bridge Deck Concrete Crack Sealer	Foot	1000

REV. - MS

MODEL: Default
FILE NAME: L:\IDOT\1996810\WO_8\Draw\Structures\SN 17-1820A-Deck Repairs SN 041-0117_NB.dgn

CMT
License No. 184-000813
© Copyright CMT, Inc.

USER NAME = Jim Michael	DESIGNED - JMM	REVISED -	
	CHECKED - FAS	REVISED -	
PLOT SCALE = N/A	DRAWN - GLD	REVISED -	
PLOT DATE = 5/13/2021 (10:20:12 AM)	CHECKED - FAS	REVISED -	

STATE OF ILLINOIS
DEPARTMENT OF TRANSPORTATION

DECK REPAIRS
STRUCTURE NO. 041-0117 (NB)

SHEET 3A OF 38 SHEETS

F.A.I. RTE.	SECTION	COUNTY	TOTAL SHEETS	SHEET NO.
57	(41-4)B-1	JEFFERSON	257	142A
		CONTRACT NO. 78550		
		ILLINOIS FED. AID PROJECT		

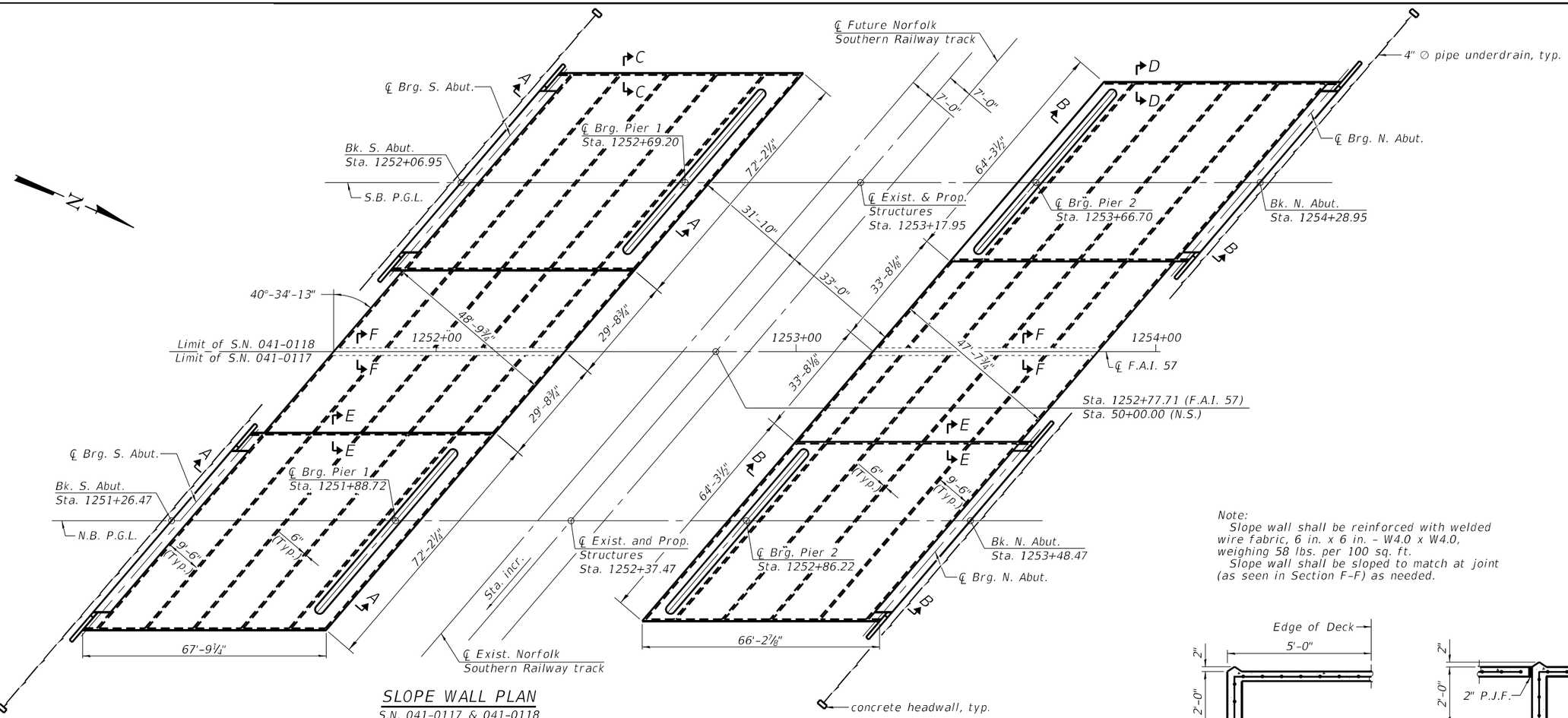

SLOPE WALL PLAN

S.N. 041-0117 & 041-0118

Note:
Slope wall shall be reinforced with welded wire fabric, 6 in. x 6 in. - W4.0 x W4.0, weighing 58 lbs. per 100 sq. ft.
Slope wall shall be sloped to match at joint (as seen in Section F-F) as needed.

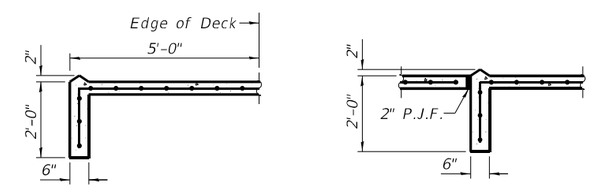

SECTION C-C

SECTION E-E

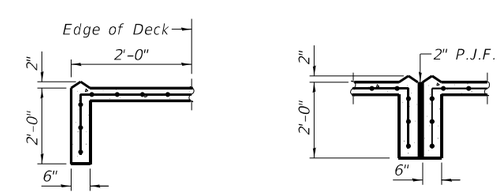

SECTION D-D

SECTION F-F

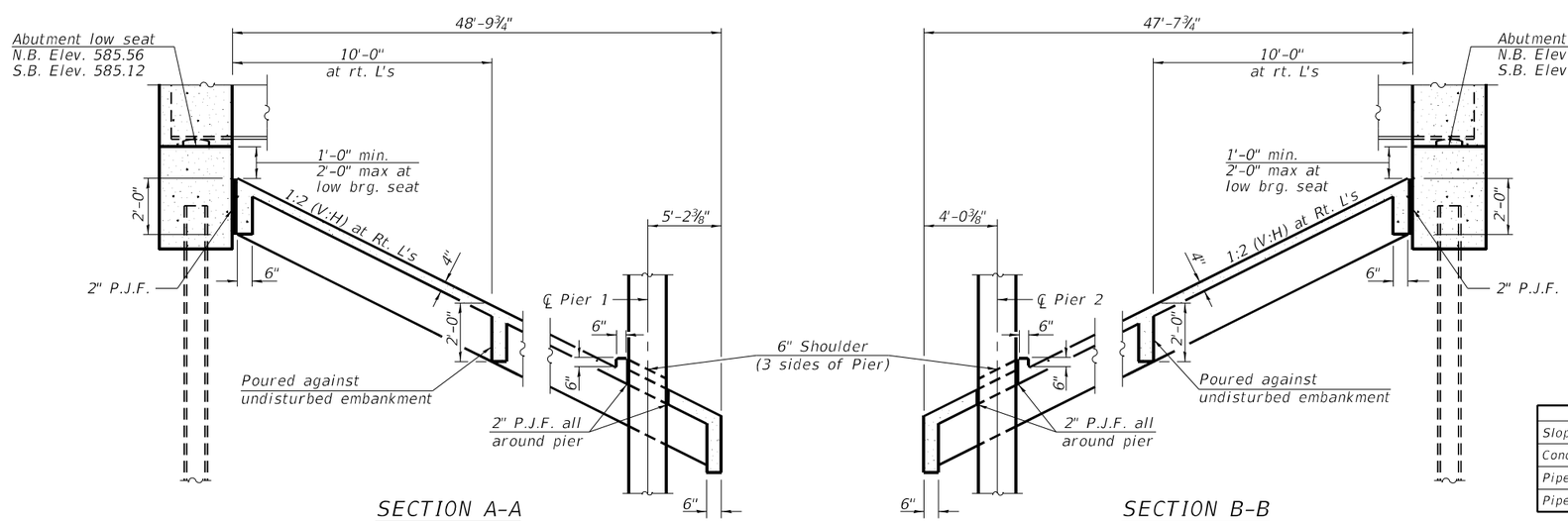

SECTION A-A

SECTION B-B

BILL OF MATERIAL

S.N. 041-0117

ITEM	UNIT	TOTAL
Slope Wall, 4 Inch	Sq. Yd.	1,022
Concrete Headwalls for Pipe Drains	Each	2
Pipe Underdrain 4" (Special)	Foot	19
Pipe Underdrain for Structures 4"	Foot	164

BILL OF MATERIAL

S.N. 041-0118

ITEM	UNIT	TOTAL
Slope Wall, 4 Inch	Sq. Yd.	1,022
Concrete Headwalls for Pipe Drains	Each	2
Pipe Underdrain 4" (Special)	Foot	22
Pipe Underdrain for Structures 4"	Foot	164

MODEL: Default
FILE NAME: L:\BDT\1906810\WO_6\Draw\Structures\SN 17-18\04-Slopewall Details.dgn

CMT
License No. 184-000613

USER NAME = Albert Reinwart	DESIGNED - AFR	REVISED -	
	CHECKED - JMW	REVISED -	
PLOT SCALE = N/A	DRAWN - AFR	REVISED -	
PLOT DATE = 4/30/2021 (11:59:58 AM)	CHECKED - FAS	REVISED -	

STATE OF ILLINOIS
DEPARTMENT OF TRANSPORTATION

SLOPEWALL DETAILS
STRUCTURE NO. 041-0117 (N.B.) & 041-0118 (S.B.)

SHEET 4 OF 38 SHEETS

F.A.I. RTE.	SECTION	COUNTY	TOTAL SHEETS	SHEET NO.
57	(41-4)B-1	JEFFERSON	257	143
		CONTRACT NO. 78550		
		ILLINOIS FED. AID PROJECT		

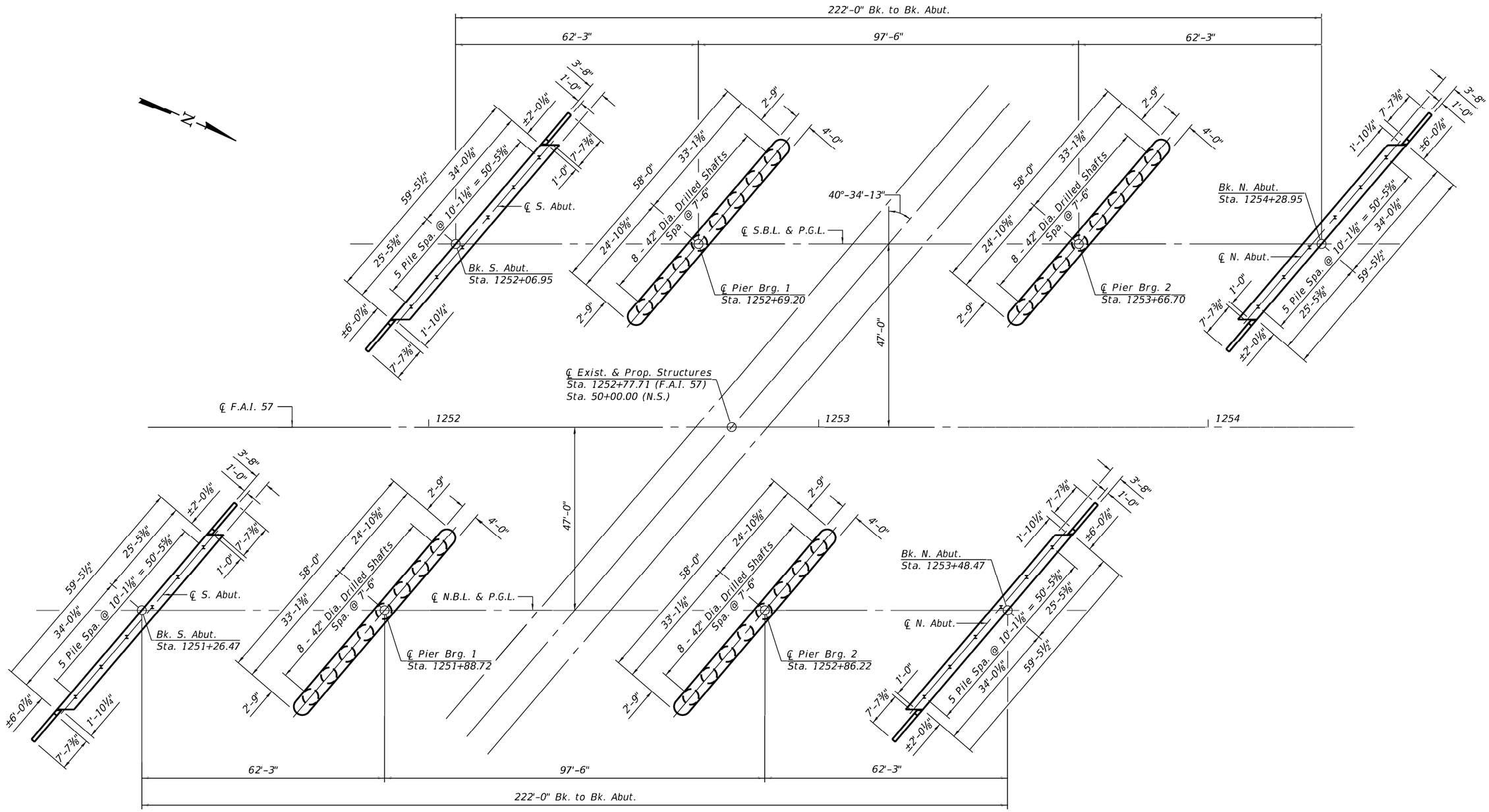

FOOTING LAYOUT PLAN

REV. - MS

MODEL: Default
FILENAME: L:\IDOT\1966810\WO_60\Dwg\Structures\SN 17-1\60AA-Footing Layout.dgn

CMT
License No. 184-000618 © Copyright CMT, Inc.

USER NAME = Albert Rainwart	DESIGNED - AI	REVISED -	
	CHECKED - FAS	REVISED -	
PLOT SCALE = N/A	DRAWN - AFR	REVISED -	
PLOT DATE = 4/30/2021 (12:00:01 PM)	CHECKED - FAS	REVISED -	

STATE OF ILLINOIS
DEPARTMENT OF TRANSPORTATION

FOOTING LAYOUT
STRUCTURE NO. 041–0117 (NB) & 041–0118 (SB)

SHEET 4A OF 38 SHEETS

F.A.I. RTE.	SECTION	COUNTY	TOTAL SHEETS	SHEET NO.
57	(41-4)B-1	JEFFERSON	257	143A
		CONTRACT NO. 78550		
		ILLINOIS FED. AID PROJECT		

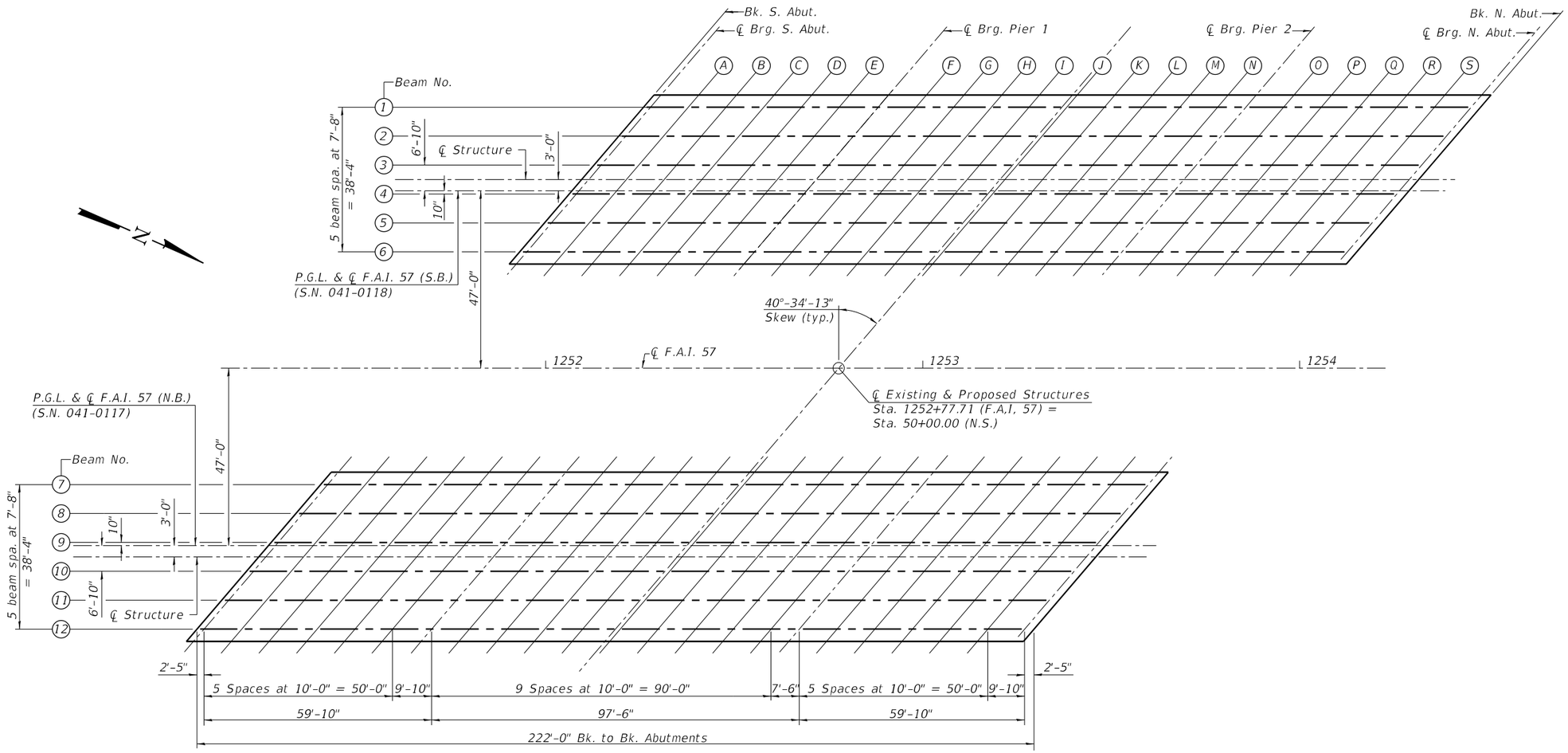

LAYOUT PLAN FOR DECK ELEVATIONS

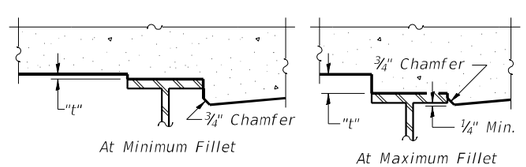

To determine "t": After all structural steel has been erected, elevations of the top flanges of the beams shall be taken at intervals shown above. These elevations subtracted from the "Theoretical Grade Elevations Adjusted for Dead Load Deflection" shown in the following tables (on Sheets 6 and 7), minus slab thickness, equals the fillet heights "t" above top flange of beams.

FILLET HEIGHTS

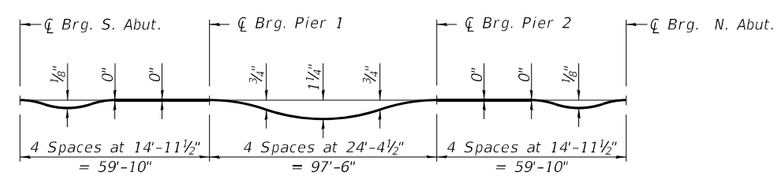

DEAD LOAD DEFLECTION DIAGRAM

(Includes weight of concrete only.)

Note:
The above deflections are not to be used in the field if the engineer is working from the grade elevations adjusted for dead load deflections as shown on Sheets 6 and 7.

MODEL: Default
FILE NAME: C:\BDOT\191008\10\WQ_RD\Draw\Structures\SN 17-181005-Deck Elev 1.dgn

CMT License No. 184-000613 © Copyright CMT, Inc.	USER NAME = Albert Reinwart	DESIGNED - JMW	REVISED -	STATE OF ILLINOIS DEPARTMENT OF TRANSPORTATION	TOP OF DECK ELEVATION LOCATIONS STRUCTURE NO. 041–0117 (NB) & 041–0118 (SB)	F.A.I. RTE.	SECTION	COUNTY	TOTAL SHEETS / SHEET NO.
		CHECKED - FAS	REVISED -			57	(41-4)B-1	JEFFERSON	257 / 144
	PLOT SCALE = N/A	DRAWN - GLD	REVISED -					CONTRACT NO. 78550	
	PLOT DATE = 4/30/2021 (12:00:02 PM)	CHECKED - FAS	REVISED -		SHEET 5 OF 38 SHEETS			ILLINOIS FED. AID PROJECT	

BEAM 1

Location	Station	Offset	Theoretical Grade Elevations	Theoretical Grade Elev. Adjusted For Dead Load Deflection & Grinding
Bk. S. Abut.	1252+25.93	-22.17	589.06	589.08
℄ Brg. S. Abut.	1252+28.34	-22.17	589.06	589.08
A	1252+38.34	-22.17	589.04	589.07
B	1252+48.34	-22.17	589.03	589.05
C	1252+58.34	-22.17	589.01	589.03
D	1252+68.34	-22.17	588.98	589.00
E	1252+78.34	-22.17	588.96	588.98
℄ Brg. Pier 1	1252+88.18	-22.17	588.93	588.95
F	1252+98.18	-22.17	588.90	588.95
G	1253+08.18	-22.17	588.87	588.95
H	1253+18.18	-22.17	588.83	588.94
I	1253+28.18	-22.17	588.80	588.92
J	1253+38.18	-22.17	588.76	588.88
K	1253+48.18	-22.17	588.71	588.82
L	1253+58.18	-22.17	588.67	588.75
M	1253+68.18	-22.17	588.62	588.68
N	1253+78.18	-22.17	588.57	588.60
℄ Brg. Pier 2	1253+85.68	-22.17	588.53	588.55
O	1253+95.68	-22.17	588.47	588.49
P	1254+05.68	-22.17	588.41	588.43
Q	1254+15.68	-22.17	588.35	588.38
R	1254+25.68	-22.17	588.29	588.31
S	1254+35.68	-22.17	588.22	588.25
℄ Brg. N. Abut.	1254+45.52	-22.17	588.15	588.17
Bk. N. Abut.	1254+47.93	-22.17	588.14	588.16

BEAM 2

Location	Station	Offset	Theoretical Grade Elevations	Theoretical Grade Elev. Adjusted For Dead Load Deflection & Grinding
Bk. S. Abut.	1252+19.36	-14.50	589.22	589.24
℄ Brg. S. Abut.	1252+21.78	-14.50	589.22	589.24
A	1252+31.78	-14.50	589.21	589.23
B	1252+41.78	-14.50	589.19	589.22
C	1252+51.78	-14.50	589.17	589.20
D	1252+61.78	-14.50	589.15	589.17
E	1252+71.78	-14.50	589.13	589.15
℄ Brg. Pier 1	1252+81.61	-14.50	589.10	589.13
F	1252+91.61	-14.50	589.08	589.13
G	1253+01.61	-14.50	589.04	589.13
H	1253+11.61	-14.50	589.01	589.12
I	1253+21.61	-14.50	588.97	589.10
J	1253+31.61	-14.50	588.94	589.06
K	1253+41.61	-14.50	588.89	589.01
L	1253+51.61	-14.50	588.85	588.94
M	1253+61.61	-14.50	588.80	588.86
N	1253+71.61	-14.50	588.75	588.79
℄ Brg. Pier 2	1253+79.11	-14.50	588.71	588.74
O	1253+89.11	-14.50	588.66	588.68
P	1253+99.11	-14.50	588.60	588.62
Q	1254+09.11	-14.50	588.54	588.57
R	1254+19.11	-14.50	588.48	588.51
S	1254+29.11	-14.50	588.42	588.44
℄ Brg. N. Abut.	1254+38.95	-14.50	588.35	588.37
Bk. N. Abut.	1254+41.36	-14.50	588.34	588.36

BEAM 3

Location	Station	Offset	Theoretical Grade Elevations	Theoretical Grade Elev. Adjusted For Dead Load Deflection & Grinding
Bk. S. Abut.	1252+12.80	-6.83	589.36	589.38
℄ Brg. S. Abut.	1252+15.21	-6.83	589.35	589.38
A	1252+25.21	-6.83	589.34	589.37
B	1252+35.21	-6.83	589.33	589.36
C	1252+45.21	-6.83	589.31	589.34
D	1252+55.21	-6.83	589.29	589.31
E	1252+65.21	-6.83	589.27	589.29
℄ Brg. Pier 1	1252+75.05	-6.83	589.25	589.27
F	1252+85.05	-6.83	589.22	589.27
G	1252+95.05	-6.83	589.19	589.27
H	1253+05.05	-6.83	589.16	589.27
I	1253+15.05	-6.83	589.13	589.25
J	1253+25.05	-6.83	589.09	589.21
K	1253+35.05	-6.83	589.05	589.16
L	1253+45.05	-6.83	589.01	589.09
M	1253+55.05	-6.83	588.96	589.02
N	1253+65.05	-6.83	588.91	588.95
℄ Brg. Pier 2	1253+72.55	-6.83	588.88	588.90
O	1253+82.55	-6.83	588.82	588.84
P	1253+92.55	-6.83	588.77	588.79
Q	1254+02.55	-6.83	588.71	588.74
R	1254+12.55	-6.83	588.65	588.68
S	1254+22.55	-6.83	588.59	588.61
℄ Brg. N. Abut.	1254+32.39	-6.83	588.52	588.54
Bk. N. Abut.	1254+34.80	-6.83	588.51	588.53

SB ℄ STRUCTURE

Location	Station	Offset	Theoretical Grade Elevations	Theoretical Grade Elev. Adjusted For Dead Load Deflection & Grinding
Bk. S. Abut.	1252+09.52	-3.00	589.42	589.44
℄ Brg. S. Abut.	1252+11.93	-3.00	589.42	589.44
A	1252+21.93	-3.00	589.40	589.43
B	1252+31.93	-3.00	589.39	589.42
C	1252+41.93	-3.00	589.38	589.40
D	1252+51.93	-3.00	589.36	589.38
E	1252+61.93	-3.00	589.34	589.35
℄ Brg. Pier 1	1252+71.77	-3.00	589.31	589.34
F	1252+81.77	-3.00	589.29	589.34
G	1252+91.77	-3.00	589.26	589.34
H	1253+01.77	-3.00	589.23	589.34
I	1253+11.77	-3.00	589.20	589.32
J	1253+21.77	-3.00	589.16	589.28
K	1253+31.77	-3.00	589.12	589.23
L	1253+41.77	-3.00	589.08	589.17
M	1253+51.77	-3.00	589.03	589.09
N	1253+61.77	-3.00	588.99	589.02
℄ Brg. Pier 2	1253+69.27	-3.00	588.95	588.97
O	1253+79.27	-3.00	588.90	588.91
P	1253+89.27	-3.00	588.84	588.86
Q	1253+99.27	-3.00	588.79	588.81
R	1254+09.27	-3.00	588.73	588.76
S	1254+19.27	-3.00	588.67	588.69
℄ Brg. N. Abut.	1254+29.11	-3.00	588.60	588.62
Bk. N. Abut.	1254+31.52	-3.00	588.59	588.61

SB ℄ ROADWAY & P.G.L.

Location	Station	Offset	Theoretical Grade Elevations	Theoretical Grade Elev. Adjusted For Dead Load Deflection & Grinding
Bk. S. Abut.	1252+06.95	0.00	589.46	589.48
℄ Brg. S. Abut.	1252+09.36	0.00	589.46	589.48
A	1252+19.36	0.00	589.45	589.48
B	1252+29.36	0.00	589.44	589.47
C	1252+39.36	0.00	589.43	589.45
D	1252+49.36	0.00	589.41	589.43
E	1252+59.36	0.00	589.39	589.40
℄ Brg. Pier 1	1252+69.20	0.00	589.37	589.39
F	1252+79.20	0.00	589.34	589.39
G	1252+89.20	0.00	589.31	589.39
H	1252+99.20	0.00	589.28	589.39
I	1253+09.20	0.00	589.25	589.37
J	1253+19.20	0.00	589.21	589.34
K	1253+29.20	0.00	589.18	589.29
L	1253+39.20	0.00	589.13	589.22
M	1253+49.20	0.00	589.09	589.15
N	1253+59.20	0.00	589.04	589.08
℄ Brg. Pier 2	1253+66.70	0.00	589.01	589.03
O	1253+76.70	0.00	588.96	588.97
P	1253+86.70	0.00	588.90	588.92
Q	1253+96.70	0.00	588.85	588.87
R	1254+06.70	0.00	588.79	588.82
S	1254+16.70	0.00	588.73	588.75
℄ Brg. N. Abut.	1254+26.54	0.00	588.67	588.69
Bk. N. Abut.	1254+28.95	0.00	588.65	588.67

BEAM 4

Location	Station	Offset	Theoretical Grade Elevations	Theoretical Grade Elev. Adjusted For Dead Load Deflection & Grinding
Bk. S. Abut.	1252+06.24	0.83	589.45	589.47
℄ Brg. S. Abut.	1252+08.65	0.83	589.45	589.47
A	1252+18.65	0.83	589.44	589.47
B	1252+28.65	0.83	589.43	589.46
C	1252+38.65	0.83	589.41	589.44
D	1252+48.65	0.83	589.40	589.41
E	1252+58.65	0.83	589.38	589.39
℄ Brg. Pier 1	1252+68.49	0.83	589.36	589.38
F	1252+78.49	0.83	589.33	589.38
G	1252+88.49	0.83	589.30	589.38
H	1252+98.49	0.83	589.27	589.38
I	1253+08.49	0.83	589.24	589.36
J	1253+18.49	0.83	589.20	589.33
K	1253+28.49	0.83	589.17	589.28
L	1253+38.49	0.83	589.12	589.21
M	1253+48.49	0.83	589.08	589.14
N	1253+58.49	0.83	589.04	589.07
℄ Brg. Pier 2	1253+65.99	0.83	589.00	589.02
O	1253+75.99	0.83	588.95	588.96
P	1253+85.99	0.83	588.90	588.92
Q	1253+95.99	0.83	588.84	588.87
R	1254+05.99	0.83	588.78	588.81
S	1254+15.99	0.83	588.72	588.74
℄ Brg. N. Abut.	1254+25.82	0.83	588.66	588.68
Bk. N. Abut.	1254+28.24	0.83	588.64	588.66

BEAM 5

Location	Station	Offset	Theoretical Grade Elevations	Theoretical Grade Elev. Adjusted For Dead Load Deflection & Grinding
Bk. S. Abut.	1251+99.67	8.50	589.34	589.36
℄ Brg. S. Abut.	1252+02.09	8.50	589.34	589.36
A	1252+12.09	8.50	589.33	589.36
B	1252+22.09	8.50	589.32	589.35
C	1252+32.09	8.50	589.31	589.33
D	1252+42.09	8.50	589.29	589.31
E	1252+52.09	8.50	589.28	589.29
℄ Brg. Pier 1	1252+61.92	8.50	589.26	589.28
F	1252+71.92	8.50	589.23	589.28
G	1252+81.92	8.50	589.21	589.29
H	1252+91.92	8.50	589.18	589.28
I	1253+01.92	8.50	589.15	589.27
J	1253+11.92	8.50	589.11	589.24
K	1253+21.92	8.50	589.08	589.19
L	1253+31.92	8.50	589.04	589.12
M	1253+41.92	8.50	589.00	589.05
N	1253+51.92	8.50	588.95	588.98
℄ Brg. Pier 2	1253+59.42	8.50	588.92	588.94
O	1253+69.42	8.50	588.87	588.88
P	1253+79.42	8.50	588.82	588.84
Q	1253+89.42	8.50	588.76	588.79
R	1253+99.42	8.50	588.70	588.73
S	1254+09.42	8.50	588.65	588.67
℄ Brg. N. Abut.	1254+19.26	8.50	588.58	588.61
Bk. N. Abut.	1254+21.67	8.50	588.57	588.59

BEAM 6

Location	Station	Offset	Theoretical Grade Elevations	Theoretical Grade Elev. Adjusted For Dead Load Deflection & Grinding
Bk. S. Abut.	1251+93.11	16.17	589.21	589.23
℄ Brg. S. Abut.	1251+95.52	16.17	589.21	589.23
A	1252+05.52	16.17	589.20	589.23
B	1252+15.52	16.17	589.19	589.22
C	1252+25.52	16.17	589.18	589.21
D	1252+35.52	16.17	589.17	589.19
E	1252+45.52	16.17	589.15	589.17
℄ Brg. Pier 1	1252+55.36	16.17	589.13	589.15
F	1252+65.36	16.17	589.11	589.16
G	1252+75.36	16.17	589.09	589.17
H	1252+85.36	16.17	589.06	589.17
I	1252+95.36	16.17	589.03	589.15
J	1253+05.36	16.17	589.00	589.12
K	1253+15.36	16.17	588.96	589.08
L	1253+25.36	16.17	588.93	589.02
M	1253+35.36	16.17	588.89	588.95
N	1253+45.36	16.17	588.84	588.88
℄ Brg. Pier 2	1253+52.86	16.17	588.81	588.83
O	1253+62.86	16.17	588.76	588.78
P	1253+72.86	16.17	588.71	588.73
Q	1253+82.86	16.17	588.66	588.69
R	1253+92.86	16.17	588.61	588.63
S	1254+02.86	16.17	588.55	588.57
℄ Brg. N. Abut.	1254+12.69	16.17	588.49	588.51
Bk. N. Abut.	1254+15.11	16.17	588.47	588.50

BEAM 7

Location	Station	Offset	Theoretical Grade Elevations	Theoretical Grade Elev. Adjusted For Dead Load Deflection & Grinding
Bk. S. Abut.	1251+40.31	-16.17	589.69	589.71
℄ Brg. S. Abut.	1251+42.73	-16.17	589.69	589.71
A	1251+52.73	-16.17	589.71	589.73
B	1251+62.73	-16.17	589.72	589.74
C	1251+72.73	-16.17	589.72	589.75
D	1251+82.73	-16.17	589.73	589.75
E	1251+92.73	-16.17	589.73	589.75
℄ Brg. Pier 1	1252+02.56	-16.17	589.73	589.75
F	1252+12.56	-16.17	589.72	589.78
G	1252+22.56	-16.17	589.72	589.80
H	1252+32.56	-16.17	589.70	589.81
I	1252+42.56	-16.17	589.69	589.81
J	1252+52.56	-16.17	589.67	589.80
K	1252+62.56	-16.17	589.65	589.76
L	1252+72.56	-16.17	589.63	589.72
M	1252+82.56	-16.17	589.60	589.66
N	1252+92.56	-16.17	589.57	589.60
℄ Brg. Pier 2	1253+00.06	-16.17	589.54	589.56
O	1253+10.06	-16.17	589.51	589.52
P	1253+20.06	-16.17	589.47	589.49
Q	1253+30.06	-16.17	589.42	589.45
R	1253+40.06	-16.17	589.38	589.41
S	1253+50.06	-16.17	589.33	589.35
℄ Brg. N. Abut.	1253+59.90	-16.17	589.28	589.30
Bk. N. Abut.	1253+62.31	-16.17	589.26	589.28

BEAM 8

Location	Station	Offset	Theoretical Grade Elevations	Theoretical Grade Elev. Adjusted For Dead Load Deflection & Grinding
Bk. S. Abut.	1251+33.75	-8.50	589.81	589.83
℄ Brg. S. Abut.	1251+36.16	-8.50	589.82	589.84
A	1251+46.16	-8.50	589.83	589.86
B	1251+56.16	-8.50	589.85	589.87
C	1251+66.16	-8.50	589.86	589.88
D	1251+76.16	-8.50	589.86	589.88
E	1251+86.16	-8.50	589.87	589.88
℄ Brg. Pier 1	1251+96.00	-8.50	589.87	589.89
F	1252+06.00	-8.50	589.86	589.91
G	1252+16.00	-8.50	589.86	589.94
H	1252+26.00	-8.50	589.85	589.95
I	1252+36.00	-8.50	589.84	589.96
J	1252+46.00	-8.50	589.82	589.94
K	1252+56.00	-8.50	589.80	589.91
L	1252+66.00	-8.50	589.78	589.87
M	1252+76.00	-8.50	589.75	589.81
N	1252+86.00	-8.50	589.73	589.76
℄ Brg. Pier 2	1252+93.50	-8.50	589.70	589.72
O	1253+03.50	-8.50	589.67	589.68
P	1253+13.50	-8.50	589.63	589.65
Q	1253+23.50	-8.50	589.59	589.61
R	1253+33.50	-8.50	589.54	589.57
S	1253+43.50	-8.50	589.50	589.52
℄ Brg. N. Abut.	1253+53.33	-8.50	589.45	589.47
Bk. N. Abut.	1253+55.75	-8.50	589.43	589.46

BEAM 9

Location	Station	Offset	Theoretical Grade Elevations	Theoretical Grade Elev. Adjusted For Dead Load Deflection & Grinding
Bk. S. Abut.	1251+27.18	-0.83	589.91	589.93
℄ Brg. S. Abut.	1251+29.60	-0.83	589.92	589.94
A	1251+39.60	-0.83	589.94	589.96
B	1251+49.60	-0.83	589.95	589.98
C	1251+59.60	-0.83	589.96	589.99
D	1251+69.60	-0.83	589.97	589.99
E	1251+79.60	-0.83	589.98	589.99
℄ Brg. Pier 1	1251+89.43	-0.83	589.98	590.00
F	1251+99.43	-0.83	589.98	590.03
G	1252+09.43	-0.83	589.98	590.06
H	1252+19.43	-0.83	589.97	590.08
I	1252+29.43	-0.83	589.96	590.08
J	1252+39.43	-0.83	589.95	590.07
K	1252+49.43	-0.83	589.93	590.04
L	1252+59.43	-0.83	589.91	590.00
M	1252+69.43	-0.83	589.89	589.94
N	1252+79.43	-0.83	589.86	589.89
℄ Brg. Pier 2	1252+86.93	-0.83	589.84	589.86
O	1252+96.93	-0.83	589.81	589.82
P	1253+06.93	-0.83	589.77	589.79
Q	1253+16.93	-0.83	589.73	589.76
R	1253+26.93	-0.83	589.69	589.72
S	1253+36.93	-0.83	589.64	589.67
℄ Brg. N. Abut.	1253+46.77	-0.83	589.60	589.62
Bk. N. Abut.	1253+49.18	-0.83	589.58	589.60

NB ℄ ROADWAY & P.G.L.

Location	Station	Offset	Theoretical Grade Elevations	Theoretical Grade Elev. Adjusted For Dead Load Deflection & Grinding
Bk. S. Abut.	1251+26.47	0.00	589.92	589.94
℄ Brg. S. Abut.	1251+28.88	0.00	589.93	589.95
A	1251+38.88	0.00	589.95	589.97
B	1251+48.88	0.00	589.96	589.99
C	1251+58.88	0.00	589.98	590.00
D	1251+68.88	0.00	589.99	590.00
E	1251+78.88	0.00	589.99	590.01
℄ Brg. Pier 1	1251+88.72	0.00	589.99	590.01
F	1251+98.72	0.00	589.99	590.04
G	1252+08.72	0.00	589.99	590.07
H	1252+18.72	0.00	589.98	590.09
I	1252+28.72	0.00	589.97	590.09
J	1252+38.72	0.00	589.96	590.08
K	1252+48.72	0.00	589.94	590.05
L	1252+58.72	0.00	589.92	590.01
M	1252+68.72	0.00	589.90	589.96
N	1252+78.72	0.00	589.87	589.91
℄ Brg. Pier 2	1252+86.22	0.00	589.85	589.87
O	1252+96.22	0.00	589.82	589.84
P	1253+06.22	0.00	589.78	589.80
Q	1253+16.22	0.00	589.75	589.77
R	1253+26.22	0.00	589.70	589.73
S	1253+36.22	0.00	589.66	589.68
℄ Brg. N. Abut.	1253+46.06	0.00	589.61	589.63
Bk. N. Abut.	1253+48.47	0.00	589.60	589.62

NB ℄ STRUCTURE

Location	Station	Offset	Theoretical Grade Elevations	Theoretical Grade Elev. Adjusted For Dead Load Deflection & Grinding
Bk. S. Abut.	1251+23.90	3.00	589.87	589.89
℄ Brg. S. Abut.	1251+26.31	3.00	589.88	589.90
A	1251+36.31	3.00	589.90	589.93
B	1251+46.31	3.00	589.91	589.94
C	1251+56.31	3.00	589.93	589.95
D	1251+66.31	3.00	589.94	589.96
E	1251+76.31	3.00	589.95	589.96
℄ Brg. Pier 1	1251+86.15	3.00	589.95	589.97
F	1251+96.15	3.00	589.95	590.00
G	1252+06.15	3.00	589.95	590.03
H	1252+16.15	3.00	589.94	590.05
I	1252+26.15	3.00	589.93	590.05
J	1252+36.15	3.00	589.92	590.04
K	1252+46.15	3.00	589.90	590.01
L	1252+56.15	3.00	589.88	589.97
M	1252+66.15	3.00	589.86	589.92
N	1252+76.15	3.00	589.84	589.87
℄ Brg. Pier 2	1252+83.65	3.00	589.81	589.84
O	1252+93.65	3.00	589.78	589.80
P	1253+03.65	3.00	589.75	589.77
Q	1253+13.65	3.00	589.71	589.74
R	1253+23.65	3.00	589.67	589.70
S	1253+33.65	3.00	589.63	589.65
℄ Brg. N. Abut.	1253+43.49	3.00	589.58	589.60
Bk. N. Abut.	1253+45.90	3.00	589.57	589.59

BEAM 10

Location	Station	Offset	Theoretical Grade Elevations	Theoretical Grade Elev. Adjusted For Dead Load Deflection & Grinding
Bk. S. Abut.	1251+20.62	6.83	589.81	589.83
℄ Brg. S. Abut.	1251+23.03	6.83	589.81	589.83
A	1251+33.03	6.83	589.83	589.86
B	1251+43.03	6.83	589.85	589.88
C	1251+53.03	6.83	589.87	589.89
D	1251+63.03	6.83	589.88	589.90
E	1251+73.03	6.83	589.89	589.90
℄ Brg. Pier 1	1251+82.87	6.83	589.89	589.91
F	1251+92.87	6.83	589.89	589.94
G	1252+02.87	6.83	589.89	589.97
H	1252+12.87	6.83	589.89	589.99
I	1252+22.87	6.83	589.88	590.00
J	1252+32.87	6.83	589.87	589.99
K	1252+42.87	6.83	589.85	589.96
L	1252+52.87	6.83	589.83	589.92
M	1252+62.87	6.83	589.81	589.87
N	1252+72.87	6.83	589.79	589.82
℄ Brg. Pier 2	1252+80.37	6.83	589.77	589.79
O	1252+90.37	6.83	589.74	589.75
P	1253+00.37	6.83	589.70	589.72
Q	1253+10.37	6.83	589.67	589.69
R	1253+20.37	6.83	589.63	589.65
S	1253+30.37	6.83	589.58	589.61
℄ Brg. N. Abut.	1253+40.21	6.83	589.54	589.56
Bk. N. Abut.	1253+42.62	6.83	589.53	589.55

BEAM 11

Location	Station	Offset	Theoretical Grade Elevations	Theoretical Grade Elev. Adjusted For Dead Load Deflection & Grinding
Bk. S. Abut.	1251+14.06	14.50	589.66	589.69
℄ Brg. S. Abut.	1251+16.47	14.50	589.67	589.69
A	1251+26.47	14.50	589.69	589.72
B	1251+36.47	14.50	589.71	589.74
C	1251+46.47	14.50	589.73	589.75
D	1251+56.47	14.50	589.74	589.76
E	1251+66.47	14.50	589.75	589.77
℄ Brg. Pier 1	1251+76.31	14.50	589.76	589.78
F	1251+86.31	14.50	589.76	589.81
G	1251+96.31	14.50	589.76	589.84
H	1252+06.31	14.50	589.76	589.87
I	1252+16.31	14.50	589.76	589.88
J	1252+26.31	14.50	589.75	589.87
K	1252+36.31	14.50	589.73	589.84
L	1252+46.31	14.50	589.72	589.81
M	1252+56.31	14.50	589.70	589.76
N	1252+66.31	14.50	589.68	589.71
℄ Brg. Pier 2	1252+73.81	14.50	589.66	589.68
O	1252+83.81	14.50	589.63	589.64
P	1252+93.81	14.50	589.60	589.62
Q	1253+03.81	14.50	589.56	589.59
R	1253+13.81	14.50	589.53	589.55
S	1253+23.81	14.50	589.48	589.51
℄ Brg. N. Abut.	1253+33.64	14.50	589.44	589.46
Bk. N. Abut.	1253+36.06	14.50	589.43	589.45

BEAM 12

Location	Station	Offset	Theoretical Grade Elevations	Theoretical Grade Elev. Adjusted For Dead Load Deflection & Grinding
Bk. S. Abut.	1251+07.49	22.17	589.49	589.51
℄ Brg. S. Abut.	1251+09.90	22.17	589.50	589.52
A	1251+19.90	22.17	589.53	589.55
B	1251+29.90	22.17	589.55	589.57
C	1251+39.90	22.17	589.57	589.59
D	1251+49.90	22.17	589.58	589.60
E	1251+59.90	22.17	589.59	589.61
℄ Brg. Pier 1	1251+69.74	22.17	589.60	589.62
F	1251+79.74	22.17	589.61	589.66
G	1251+89.74	22.17	589.61	589.69
H	1251+99.74	22.17	589.61	589.72
I	1252+09.74	22.17	589.61	589.73
J	1252+19.74	22.17	589.60	589.72
K	1252+29.74	22.17	589.59	589.70
L	1252+39.74	22.17	589.57	589.66
M	1252+49.74	22.17	589.56	589.62
N	1252+59.74	22.17	589.54	589.57
℄ Brg. Pier 2	1252+67.24	22.17	589.52	589.54
O	1252+77.24	22.17	589.49	589.51
P	1252+87.24	22.17	589.47	589.49
Q	1252+97.24	22.17	589.43	589.46
R	1253+07.24	22.17	589.40	589.43
S	1253+17.24	22.17	589.36	589.38
℄ Brg. N. Abut.	1253+27.08	22.17	589.32	589.34
Bk. N. Abut.	1253+29.49	22.17	589.31	589.33

WEST EDGE OF SHOULDER

Location	Station	Offset	Theoretical Grade Elevations	Theoretical Grade Elevations Adjusted For Grinding
S. End of S. Appr.	1251+13.20	-18.00	589.59	589.61
A1	1251+23.20	-18.00	589.62	589.64
A2	1251+33.20	-18.00	589.64	589.66
N. End of S. Appr.	1251+43.20	-18.00	589.65	589.68

WEST EDGE OF PAVEMENT

Location	Station	Offset	Theoretical Grade Elevations	Theoretical Grade Elevations Adjusted For Grinding
S. End of S. Appr.	1251+08.06	-12.00	589.70	589.72
A1	1251+18.06	-12.00	589.72	589.75
A2	1251+28.06	-12.00	589.75	589.77
N. End of S. Appr.	1251+38.06	-12.00	589.77	589.79

℄ ROADWAY & P.G.L.

Location	Station	Offset	Theoretical Grade Elevations	Theoretical Grade Elevations Adjusted For Grinding
S. End of S. Appr.	1250+97.79	0.00	589.85	589.87
A1	1251+07.79	0.00	589.88	589.90
A2	1251+17.79	0.00	589.90	589.92
N. End of S. Appr.	1251+27.79	0.00	589.93	589.95

℄ STRUCTURE

Location	Station	Offset	Theoretical Grade Elevations	Theoretical Grade Elevations Adjusted For Grinding
S. End of S. Appr.	1250+95.22	3.00	589.80	589.82
A1	1251+05.22	3.00	589.83	589.85
A2	1251+15.22	3.00	589.85	589.87
N. End of S. Appr.	1251+25.22	3.00	589.88	589.90

EAST EDGE OF PAVEMENT

Location	Station	Offset	Theoretical Grade Elevations	Theoretical Grade Elevations Adjusted For Grinding
S. End of S. Appr.	1250+87.51	12.00	589.64	589.66
A1	1250+97.51	12.00	589.67	589.69
A2	1251+07.51	12.00	589.70	589.72
N. End of S. Appr.	1251+17.51	12.00	589.72	589.74

EAST EDGE OF SHOULDER

Location	Station	Offset	Theoretical Grade Elevations	Theoretical Grade Elevations Adjusted For Grinding
S. End of S. Appr.	1250+77.24	24.00	589.36	589.38
A1	1250+87.24	24.00	589.39	589.42
A2	1250+97.24	24.00	589.43	589.45
N. End of S. Appr.	1251+07.24	24.00	589.46	589.48

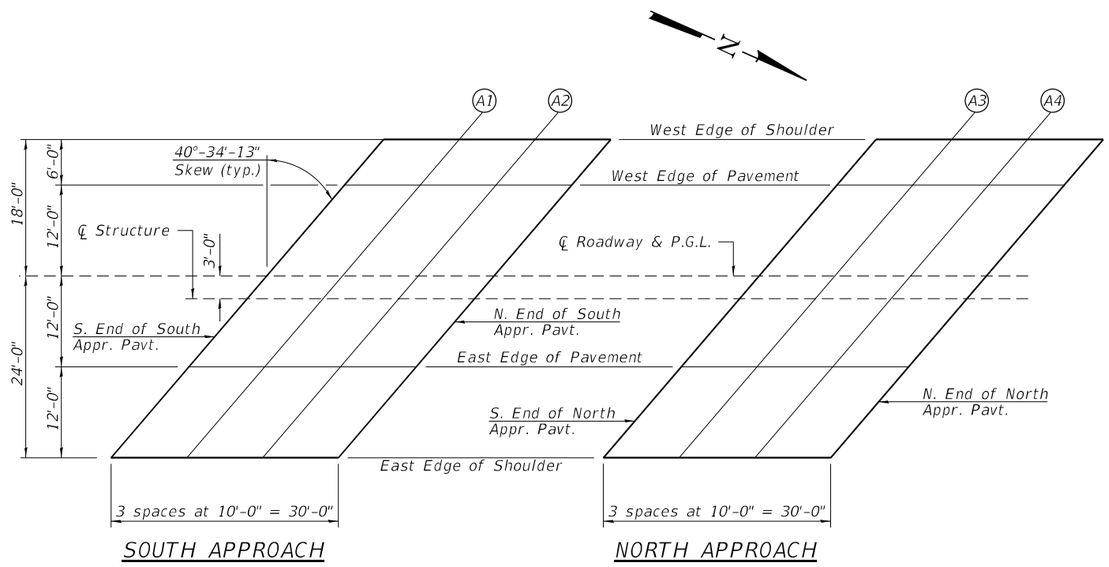

PLAN
(S.N. 041-0117)

WEST EDGE OF SHOULDER

Location	Station	Offset	Theoretical Grade Elevations	Theoretical Grade Elevations Adjusted For Grinding
S. End of N. Appr.	1253+62.57	-18.00	589.23	589.25
A3	1253+72.57	-18.00	589.17	589.19
A4	1253+82.57	-18.00	589.11	589.13
N. End of N. Appr.	1253+92.57	-18.00	589.05	589.07

WEST EDGE OF PAVEMENT

Location	Station	Offset	Theoretical Grade Elevations	Theoretical Grade Elevations Adjusted For Grinding
S. End of N. Appr.	1253+57.43	-12.00	589.37	589.39
A3	1253+67.43	-12.00	589.32	589.34
A4	1253+77.43	-12.00	589.26	589.28
N. End of N. Appr.	1253+87.43	-12.00	589.20	589.22

℄ ROADWAY & P.G.L.

Location	Station	Offset	Theoretical Grade Elevations	Theoretical Grade Elevations Adjusted For Grinding
S. End of N. Appr.	1253+47.15	0.00	589.61	589.63
A3	1253+57.15	0.00	589.55	589.58
A4	1253+67.15	0.00	589.50	589.52
N. End of N. Appr.	1253+77.15	0.00	589.44	589.46

℄ STRUCTURE

Location	Station	Offset	Theoretical Grade Elevations	Theoretical Grade Elevations Adjusted For Grinding
S. End of N. Appr.	1253+44.58	3.00	589.57	589.60
A3	1253+54.58	3.00	589.52	589.54
A4	1253+64.58	3.00	589.47	589.49
N. End of N. Appr.	1253+74.58	3.00	589.41	589.43

EAST EDGE OF PAVEMENT

Location	Station	Offset	Theoretical Grade Elevations	Theoretical Grade Elevations Adjusted For Grinding
S. End of N. Appr.	1253+36.88	12.00	589.48	589.50
A3	1253+46.88	12.00	589.43	589.45
A4	1253+56.88	12.00	589.38	589.40
N. End of N. Appr.	1253+66.88	12.00	589.32	589.34

EAST EDGE OF SHOULDER

Location	Station	Offset	Theoretical Grade Elevations	Theoretical Grade Elevations Adjusted For Grinding
S. End of N. Appr.	1253+26.60	24.00	589.28	589.30
A3	1253+36.60	24.00	589.24	589.26
A4	1253+46.60	24.00	589.19	589.21
N. End of N. Appr.	1253+56.60	24.00	589.14	589.16

WEST EDGE OF SHOULDER

Location	Station	Offset	Theoretical Grade Elevations	Theoretical Grade Elevations Adjusted For Grinding
S. End of S. Appr.	1251+98.82	-24.00	589.05	589.07
B1	1252+08.82	-24.00	589.04	589.06
B2	1252+18.82	-24.00	589.03	589.05
N. End of S. Appr.	1252+28.82	-24.00	589.02	589.04

WEST EDGE OF PAVEMENT

Location	Station	Offset	Theoretical Grade Elevations	Theoretical Grade Elevations Adjusted For Grinding
S. End of S. Appr.	1251+88.54	-12.00	589.29	589.31
B1	1251+98.54	-12.00	589.29	589.31
B2	1252+08.54	-12.00	589.28	589.30
N. End of S. Appr.	1252+18.54	-12.00	589.27	589.29

℄ STRUCTURE

Location	Station	Offset	Theoretical Grade Elevations	Theoretical Grade Elevations Adjusted For Grinding
S. End of S. Appr.	1251+80.84	-3.00	589.43	589.45
B1	1251+90.84	-3.00	589.43	589.45
B2	1252+00.84	-3.00	589.42	589.44
N. End of S. Appr.	1252+10.84	-3.00	589.42	589.44

℄ ROADWAY & P.G.L.

Location	Station	Offset	Theoretical Grade Elevations	Theoretical Grade Elevations Adjusted For Grinding
S. End of S. Appr.	1251+78.27	0.00	589.48	589.50
B1	1251+88.27	0.00	589.47	589.49
B2	1251+98.27	0.00	589.47	589.49
N. End of S. Appr.	1252+08.27	0.00	589.46	589.48

EAST EDGE OF PAVEMENT

Location	Station	Offset	Theoretical Grade Elevations	Theoretical Grade Elevations Adjusted For Grinding
S. End of S. Appr.	1251+67.99	12.00	589.29	589.31
B1	1251+77.99	12.00	589.30	589.32
B2	1251+87.99	12.00	589.29	589.31
N. End of S. Appr.	1251+97.99	12.00	589.29	589.31

EAST EDGE OF SHOULDER

Location	Station	Offset	Theoretical Grade Elevations	Theoretical Grade Elevations Adjusted For Grinding
S. End of S. Appr.	1251+62.85	18.00	589.17	589.19
B1	1251+72.85	18.00	589.17	589.20
B2	1251+82.85	18.00	589.17	589.20
N. End of S. Appr.	1251+92.85	18.00	589.17	589.19

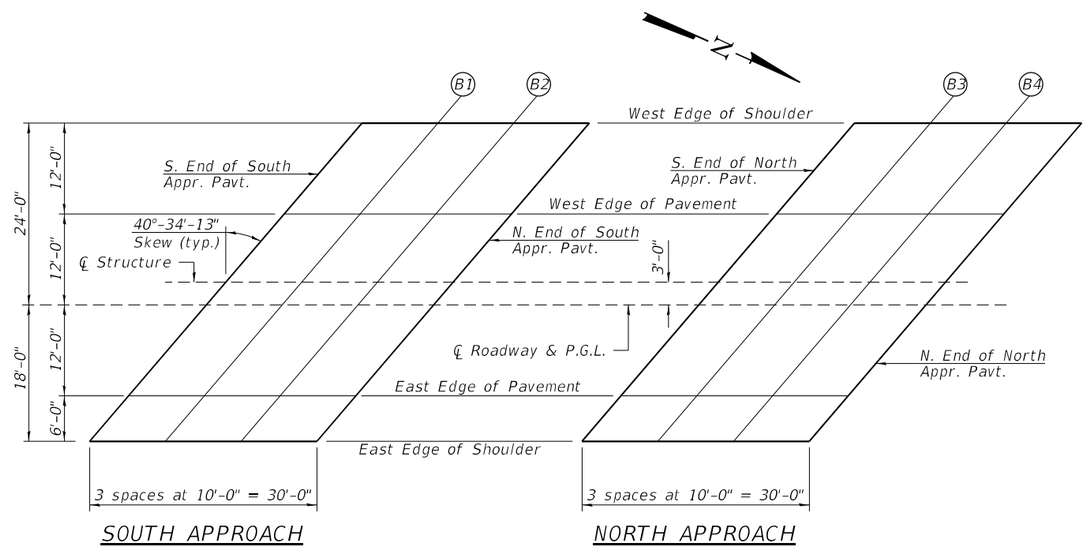

PLAN
(S.N. 041-0118)

WEST EDGE OF SHOULDER

Location	Station	Offset	Theoretical Grade Elevations	Theoretical Grade Elevations Adjusted For Grinding
S. End of N. Appr.	1254+48.18	-24.00	588.10	588.12
B3	1254+58.18	-24.00	588.03	588.05
B4	1254+68.18	-24.00	587.95	587.97
N. End of N. Appr.	1254+78.18	-24.00	587.87	587.89

WEST EDGE OF PAVEMENT

Location	Station	Offset	Theoretical Grade Elevations	Theoretical Grade Elevations Adjusted For Grinding
S. End of N. Appr.	1254+37.91	-12.00	588.41	588.43
B3	1254+47.91	-12.00	588.34	588.36
B4	1254+57.91	-12.00	588.27	588.29
N. End of N. Appr.	1254+67.91	-12.00	588.19	588.21

℄ STRUCTURE

Location	Station	Offset	Theoretical Grade Elevations	Theoretical Grade Elevations Adjusted For Grinding
S. End of N. Appr.	1254+30.20	-3.00	588.60	588.62
B3	1254+40.20	-3.00	588.53	588.55
B4	1254+50.20	-3.00	588.46	588.48
N. End of N. Appr.	1254+60.20	-3.00	588.39	588.41

℄ ROADWAY & P.G.L.

Location	Station	Offset	Theoretical Grade Elevations	Theoretical Grade Elevations Adjusted For Grinding
S. End of N. Appr.	1254+27.63	0.00	588.66	588.68
B3	1254+37.63	0.00	588.59	588.61
B4	1254+47.63	0.00	588.52	588.54
N. End of N. Appr.	1254+57.63	0.00	588.45	588.47

EAST EDGE OF PAVEMENT

Location	Station	Offset	Theoretical Grade Elevations	Theoretical Grade Elevations Adjusted For Grinding
S. End of N. Appr.	1254+17.36	12.00	588.54	588.56
B3	1254+27.36	12.00	588.48	588.50
B4	1254+37.36	12.00	588.41	588.43
N. End of N. Appr.	1254+47.36	12.00	588.34	588.36

EAST EDGE OF SHOULDER

Location	Station	Offset	Theoretical Grade Elevations	Theoretical Grade Elevations Adjusted For Grinding
S. End of N. Appr.	1254+12.22	18.00	588.46	588.48
B3	1254+22.22	18.00	588.39	588.41
B4	1254+32.22	18.00	588.33	588.35
N. End of N. Appr.	1254+42.22	18.00	588.26	588.28

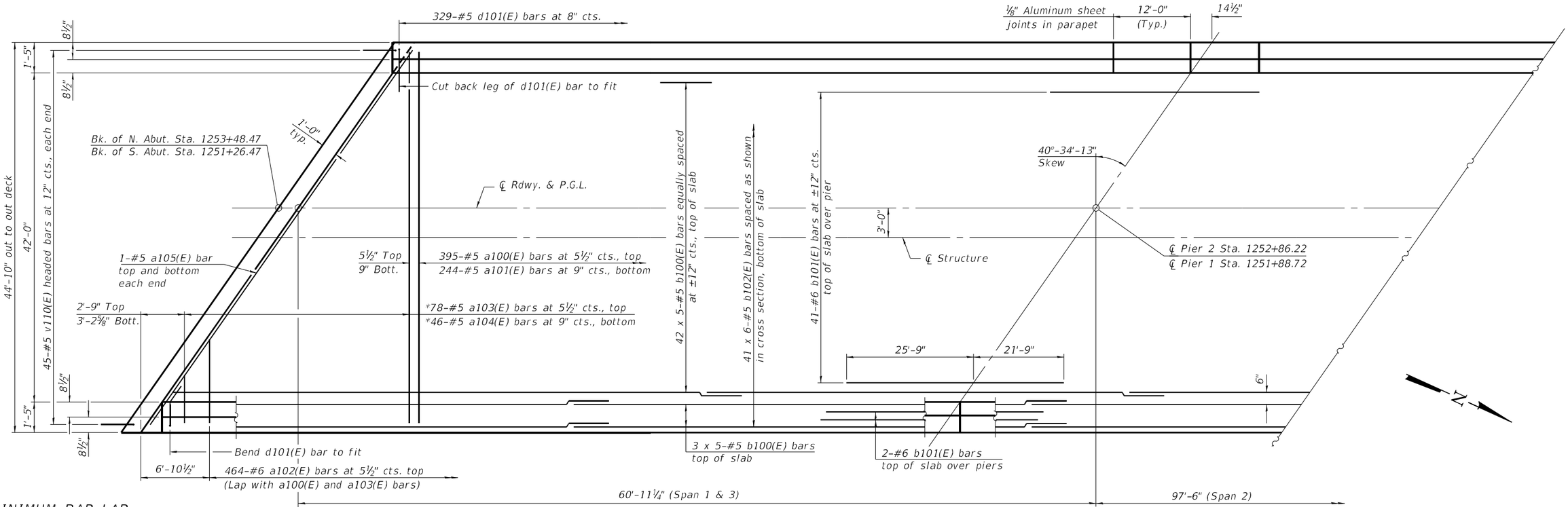

MINIMUM BAR LAP

#5 bar = 3'-6"

* See Field Cutting Diagram on sheet 11 of 38.

PARTIAL PLAN

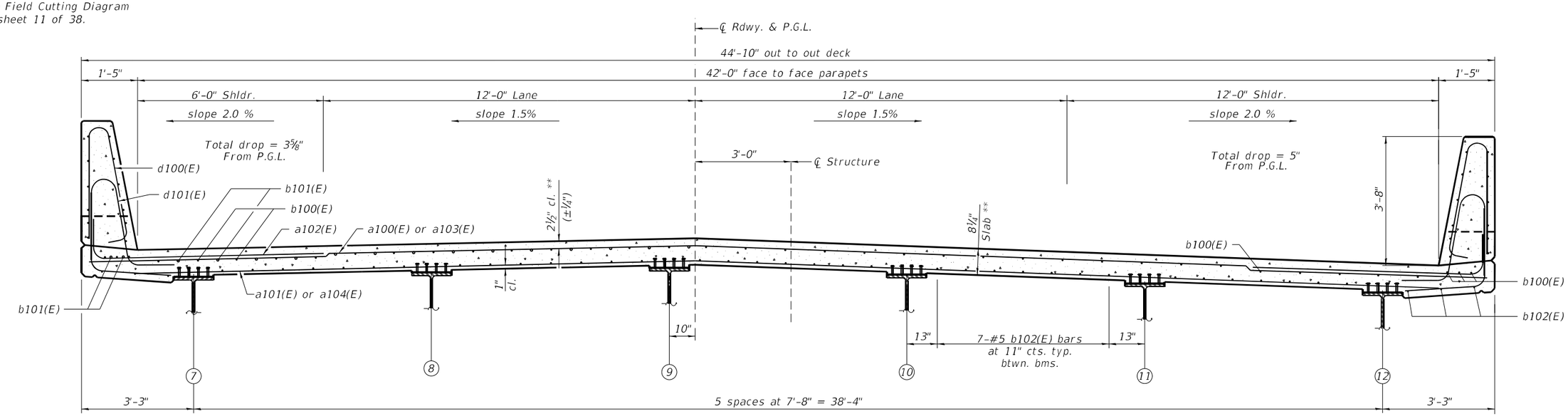

NEAR PIER

NEAR MIDSPAN

**Prior to grinding

CROSS SECTION

(Looking North)

Notes:

See sheet 11 of 38 for superstructure details and Bill of Material.

Bars indicated thus 20 x 3-#5 etc. indicates 20 lines of bars with 3 lengths per line.

MODEL: Default
FILE NAME: L:\IDOT\1906810\WO_6\Drawi\Structures\SN 17-18\910-Superstructure NB (041-0117).dgn

CMT
License No. 184-000613
© Copyright CMT, Inc.

USER NAME = Albert Reinwart	DESIGNED - AFR	REVISED -	
	CHECKED - JMW	REVISED -	
PLOT SCALE = N/A	DRAWN - GLD	REVISED -	
PLOT DATE = 4/30/2021 (12:00:08 PM)	CHECKED - LM	REVISED -	

STATE OF ILLINOIS
DEPARTMENT OF TRANSPORTATION

SUPERSTRUCTURE (NB)
STRUCTURE NO. 041-0117 (NB)

SHEET 10 OF 38 SHEETS

F.A.I. RTE.	SECTION	COUNTY	TOTAL SHEETS	SHEET NO.
57	(41-4)B-1	JEFFERSON	257	149
		CONTRACT NO. 78550		
		ILLINOIS FED. AID PROJECT		

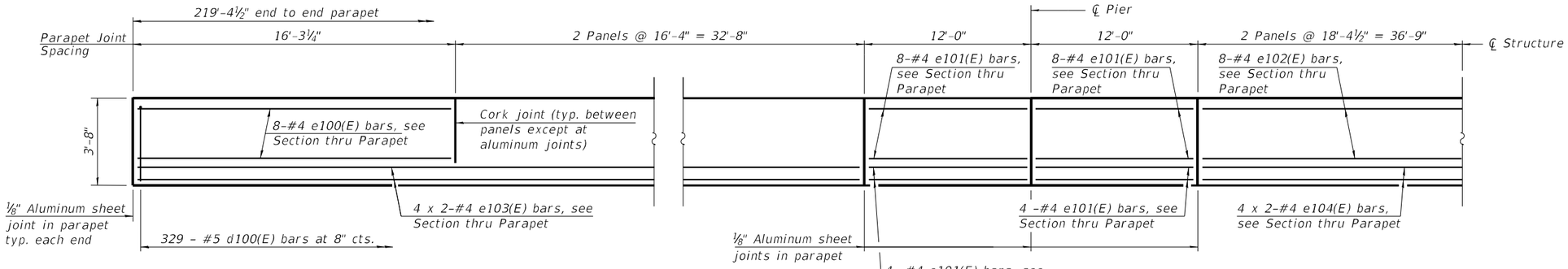

INSIDE ELEVATION OF PARAPET

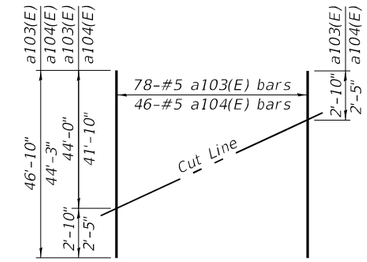

FIELD CUTTING DIAGRAM

Order a103(E) and a104(E) bars full length. Cut as shown and use remainder of bars in opposite end of deck.

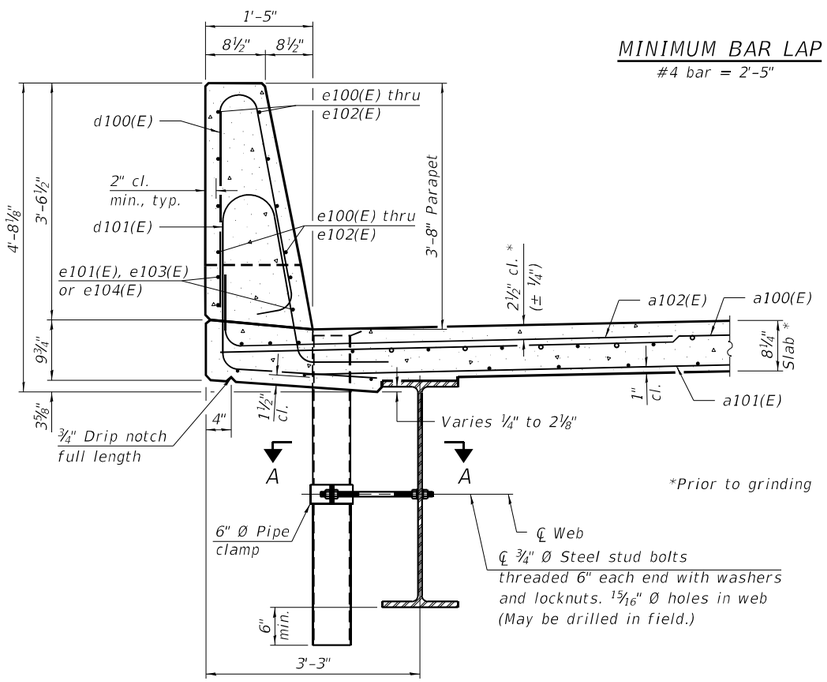

MINIMUM BAR LAP

#4 bar = 2'-5"

SECTION THRU PARAPET

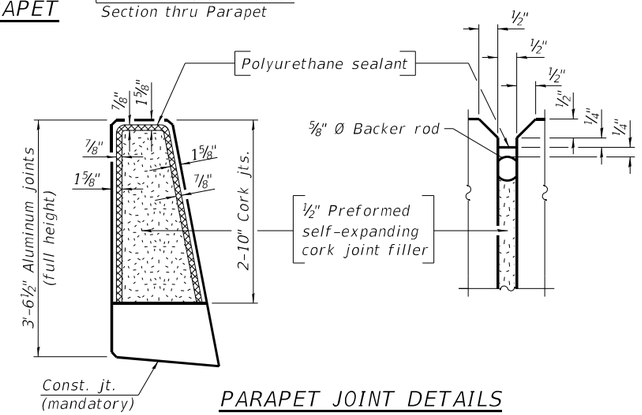

PARAPET JOINT DETAILS

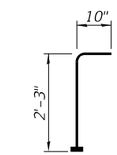

BAR v110(E)

(Headed)

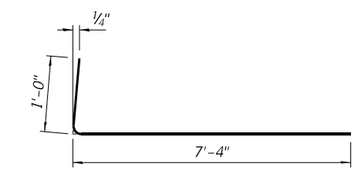

BAR a102(E)

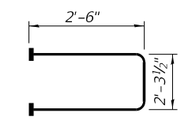

BAR s110(E)

(Headed)

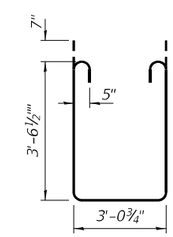

BAR s111(E)

Notes:

Fiberglass pipe shall conform to ASTM D2996, with short-time rupture strength hoop tensile stress of 30,000 p.s.i. minimum.

The exterior surfaces of the floor drains shall be painted according to Article 506 with the finish coat as specified. The exterior surfaces of the drains shall be cleaned according to the Society of Protective Coating's Spec. SSPC-SP1 prior to painting.

The top portion of aluminum floor drains shall be coated to minimize reaction with wet concrete.

The clamping device shall be galvanized according to AASHTO M 232. Cost of clamping device included with Floor Drains.

The ⅛" aluminum sheet shall be ASTM B 209 alloy 3003-H14 and coated to minimize reaction with wet concrete. Cost included with Concrete Superstructure.

The polyurethane sealant shall be according to Article 1050.04 of the Std. Spec. and the color shall be gray.

Headed bars shall conform to ASTM A970 with threaded attachment; Class HA; and reinforcement bars conforming to ASTM A706. Cost included with Reinforcement Bars, Epoxy Coated.

N.B. SUPERSTRUCTURE BILL OF MATERIAL

Bar	No.	Size	Length	Shape
a100(E)	395	#5	44'-6"	
a101(E)	244	#5	42'-8"	
a102(E)	928	#6	8'-4"	
a103(E)	78	#5	46'-10"	
a104(E)	46	#5	44'-3"	
a105(E)	4	#5	58'-7"	
b100(E)	240	#5	46'-8"	
b101(E)	90	#6	47'-6"	
b102(E)	246	#5	39'-6"	
d100(E)	658	#5	7'-0"	
d101(E)	658	#5	8'-6"	
e100(E)	96	#4	15'-11"	
e101(E)	96	#4	11'-8"	
e102(E)	64	#4	18'-0"	
e103(E)	32	#4	25'-7"	
e104(E)	16	#4	37'-10"	
m110(E)	8	#6	58'-7"	
m111(E)	30	#6	9'-7"	
m112(E)	12	#6	3'-10"	
s110(E)	82	#5	7'-4"	
s111(E)	82	#5	11'-4"	
v110(E)	90	#5	3'-1"	
Concrete Superstructure			Cu. Yd.	378.5
Protective Coat			Sq. Yd.	1,258
Reinforcement Bars, Epoxy Coated			Lbs.	92,450
Bridge Deck Grooving (Longitudinal)			Sq. Yd.	585

Bars indicated thus 1 x 2-#4 etc. indicates 1 line of bars with 2 lengths per line.

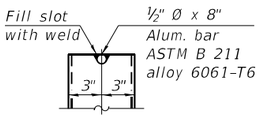

ALUMINUM TUBE

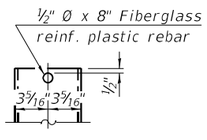

FIBERGLASS PIPE

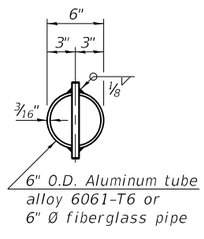

TOP PLAN

(Showing aluminum tube)

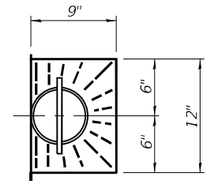

TOP PLAN

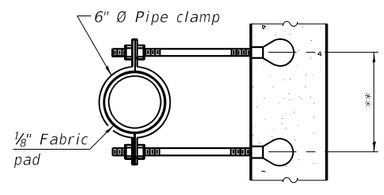

SECTION A-A

**Dimension as required by pipe clamp

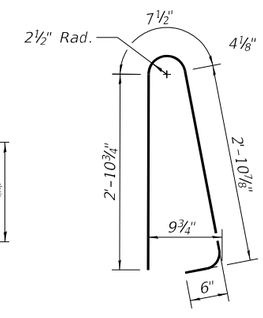

BAR d100(E)

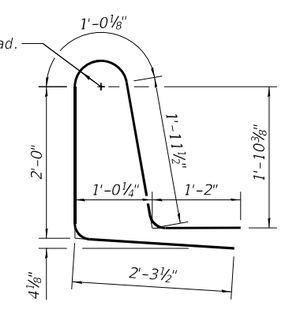

BAR d101(E)

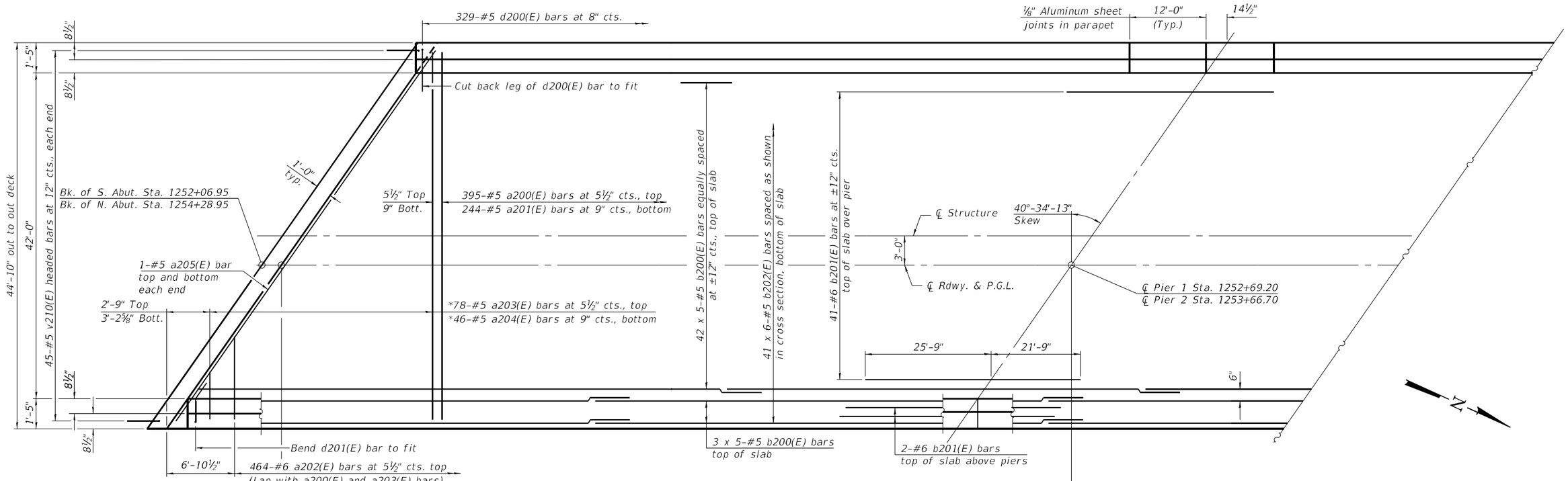

MINIMUM BAR LAP

#5 bar = 3'-6"

* See Field Cutting Diagram on sheet 13 of 38.

PARTIAL PLAN

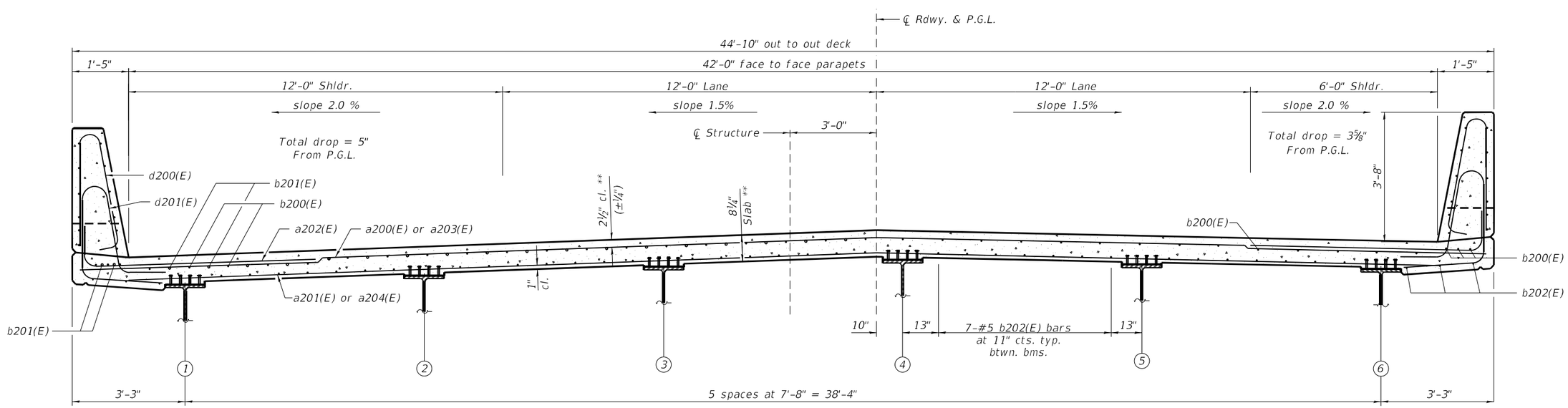

NEAR PIER

NEAR MIDSPAN

**Prior to grinding

CROSS SECTION

(Looking North)

Notes:
See sheet 13 of 38 for superstructure details and Bill of Material.
Bars indicated thus 20 x 3-#5 etc. indicates 20 lines of bars with 3 lengths per line.

MODEL: Default
FILE NAME: L:\BDOT\19D861\0\WO_8\Draw\Structures\SN 17-18\012-Superstructure SB (041-0118).dgn

CMT
License No. 184-000613
© Copyright CMT, Inc.

USER NAME = Albert Reinwart	DESIGNED - AFR	REVISED -	
	CHECKED - JMW	REVISED -	
PLOT SCALE = N/A	DRAWN - GLD	REVISED -	
PLOT DATE = 4/30/2021 (12:00:10 PM)	CHECKED - LM	REVISED -	

STATE OF ILLINOIS
DEPARTMENT OF TRANSPORTATION

SUPERSTRUCTURE
STRUCTURE NO. 041-0118 (SB)

SHEET 12 OF 38 SHEETS

F.A.I. RTE.	SECTION	COUNTY	TOTAL SHEETS	SHEET NO.
57	(41-4)B-1	JEFFERSON	257	151
		CONTRACT NO. 78550		
		ILLINOIS	FED. AID PROJECT	

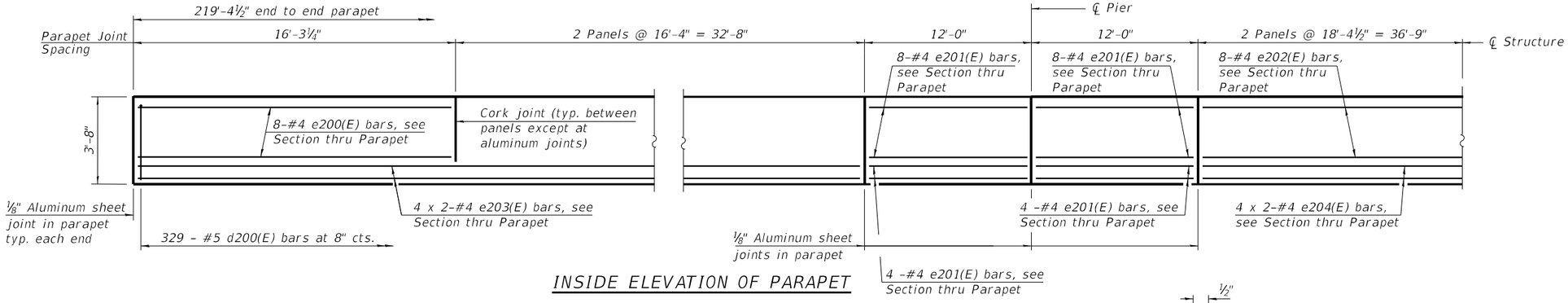

INSIDE ELEVATION OF PARAPET

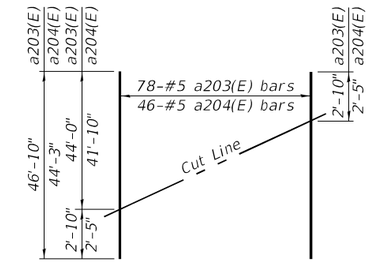

FIELD CUTTING DIAGRAM

Order a203(E) and a204(E) bars full length. Cut as shown and use remainder of bars in opposite end of deck.

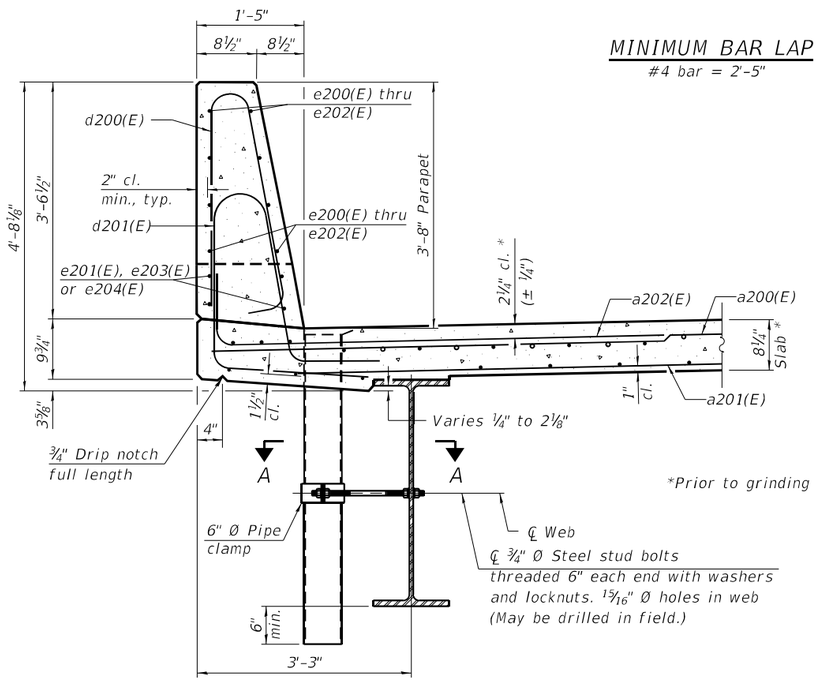

MINIMUM BAR LAP

#4 bar = 2'-5"

*Prior to grinding

SECTION THRU PARAPET

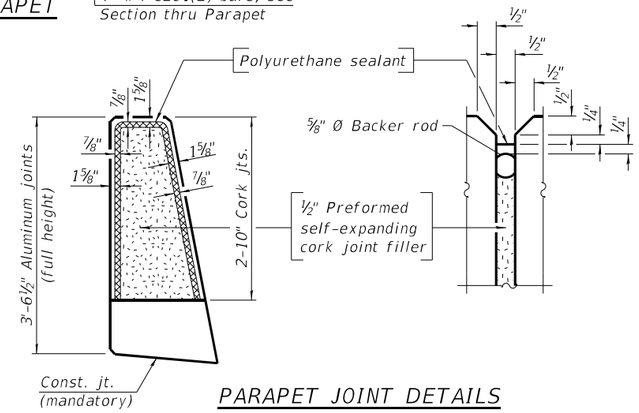

PARAPET JOINT DETAILS

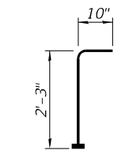

BAR v210(E)

(Headed)

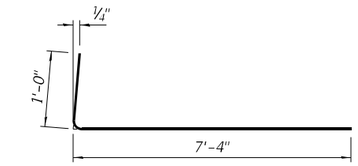

BAR a202(E)

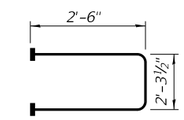

BAR s210(E)

(Headed)

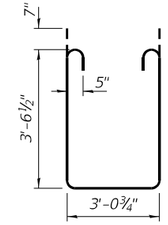

BAR s211(E)

Notes:

Fiberglass pipe shall conform to ASTM D2996, with short-time rupture strength hoop tensile stress of 30,000 p.s.i. minimum.

The exterior surfaces of the floor drains shall be painted according to Article 506 with the finish coat as specified. The exterior surfaces of the drains shall be cleaned according to the Society of Protective Coating's Spec. SSPC-SP1 prior to painting.

The top portion of aluminum floor drains shall be coated to minimize reaction with wet concrete.

The clamping device shall be galvanized according to AASHTO M 232. Cost of clamping device included with Floor Drains.

The ⅛" aluminum sheet shall be ASTM B 209 alloy 3003-H14 and coated to minimize reaction with wet concrete. Cost included with Concrete Superstructure.

The polyurethane sealant shall be according to Article 1050.04 of the Std. Spec. and the color shall be gray.

Headed bars shall conform to ASTM A970 with threaded attachment; Class HA; and reinforcement bars conforming to ASTM A706. Cost included with Reinforcement Bars, Epoxy Coated.

S.B. SUPERSTRUCTURE BILL OF MATERIAL

Bar	No.	Size	Length	Shape
a200(E)	395	#5	44'-6"	
a201(E)	244	#5	42'-8"	
a202(E)	928	#6	8'-4"	
a203(E)	78	#5	46'-10"	
a204(E)	46	#5	44'-3"	
a205(E)	4	#5	58'-7"	
b200(E)	240	#5	46'-8"	
b201(E)	90	#6	47'-6"	
b202(E)	246	#5	39'-6"	
d200(E)	658	#5	7'-0"	
d201(E)	658	#5	8'-6"	
e200(E)	96	#4	15'-11"	
e201(E)	96	#4	11'-8"	
e202(E)	64	#4	18'-0"	
e203(E)	32	#4	25'-7"	
e204(E)	16	#4	37'-10"	
m210(E)	8	#6	58'-7"	
m211(E)	30	#6	9'-7"	
m212(E)	12	#6	3'-10"	
s210(E)	82	#5	7'-4"	
s211(E)	82	#5	11'-4"	
v210(E)	90	#5	3'-1"	
Concrete Superstructure			Cu. Yd.	378.3
Protective Coat			Sq. Yd.	1,256
Reinforcement Bars, Epoxy Coated			Lbs.	92,450
Bridge Deck Grooving (Longitudinal)			Sq. Yd.	585

Bars indicated thus 1 x 2-#4 etc. indicates 1 line of bars with 2 lengths per line.

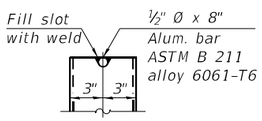

ALUMINUM TUBE

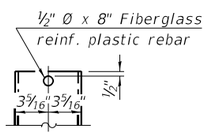

FIBERGLASS PIPE

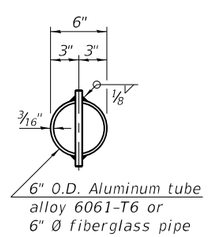

TOP PLAN

(Showing aluminum tube)

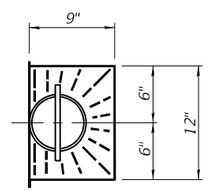

TOP PLAN

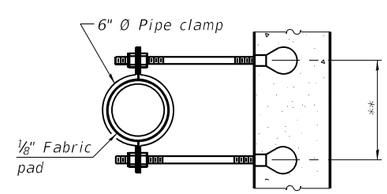

SECTION A-A

**Dimension as required by pipe clamp

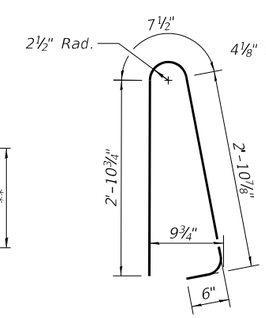

BAR d200(E)

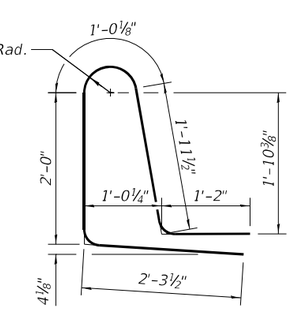

BAR d201(E)

CMT License No. 184-000813 © Copyright CMT, Inc.	USER NAME = Albert Reinwart	DESIGNED - AFR	REVISED -	STATE OF ILLINOIS DEPARTMENT OF TRANSPORTATION	SUPERSTRUCTURE DETAILS STRUCTURE NO. 041-0118 (SB)
		CHECKED - JMW	REVISED -		
	PLOT SCALE = N/A	DRAWN - GLD	REVISED -		
	PLOT DATE = 4/30/2021 (12:00:12 PM)	CHECKED - LM	REVISED -		SHEET 13 OF 38 SHEETS

F.A.I. RTE.	SECTION	COUNTY	TOTAL SHEETS	SHEET NO.
57	(41-4)B-1	JEFFERSON	257	152
		CONTRACT NO. 78550		
		ILLINOIS FED. AID PROJECT		

MODEL: Default
FILE NAME: L:\IDOT\150861\0\WO_8\Draw\Structures\SN 17-18\013-Superstructure dft-SB (041-0118).dgn

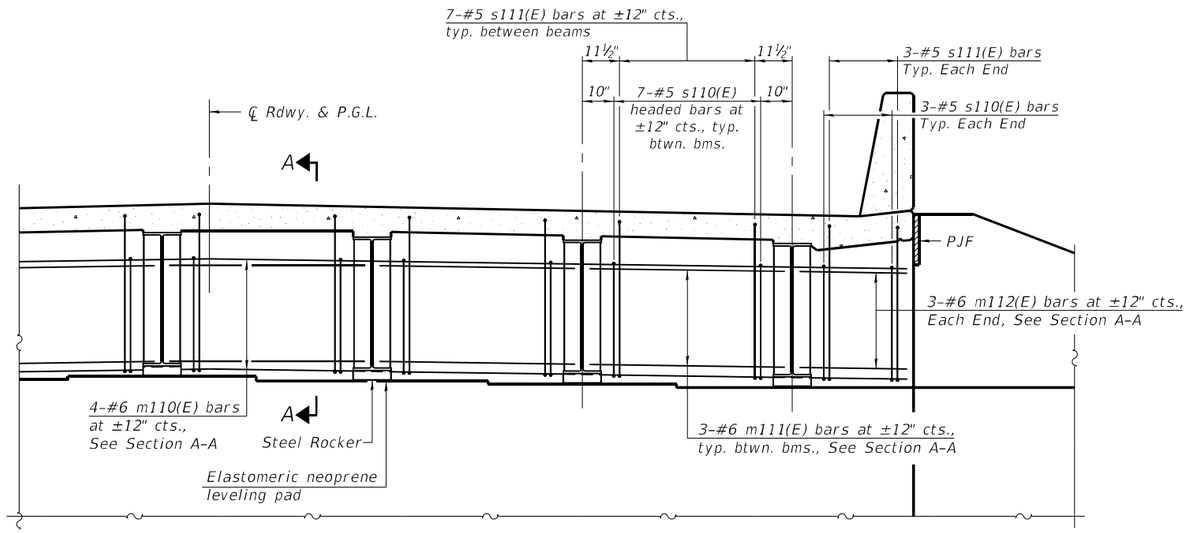

DIAPHRAGM AT ABUTMENT

(Horizontal Dimensions at Rt. ∠'s with Lanes)

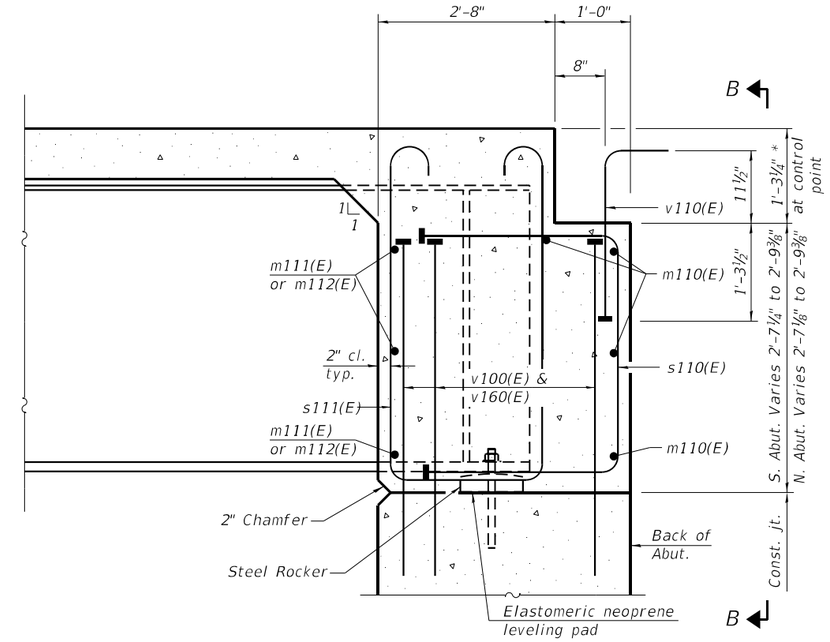

SECTION A-A

(at Rt. ∠'s)

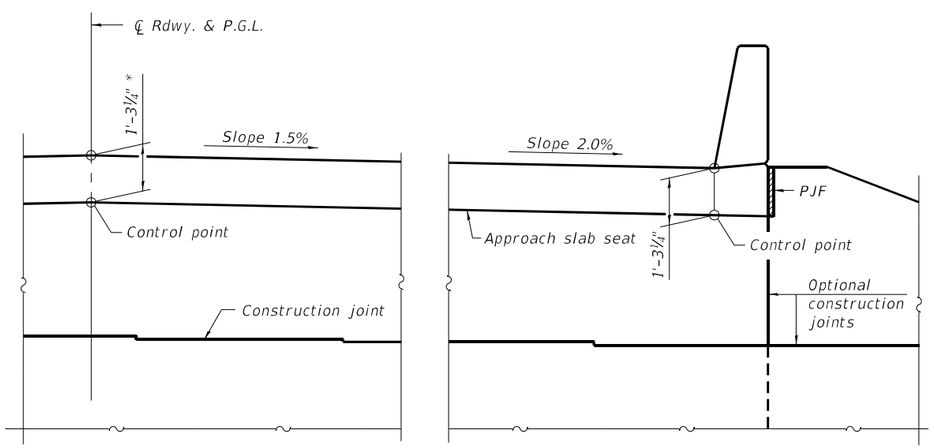

VIEW B-B

*Prior to grinding

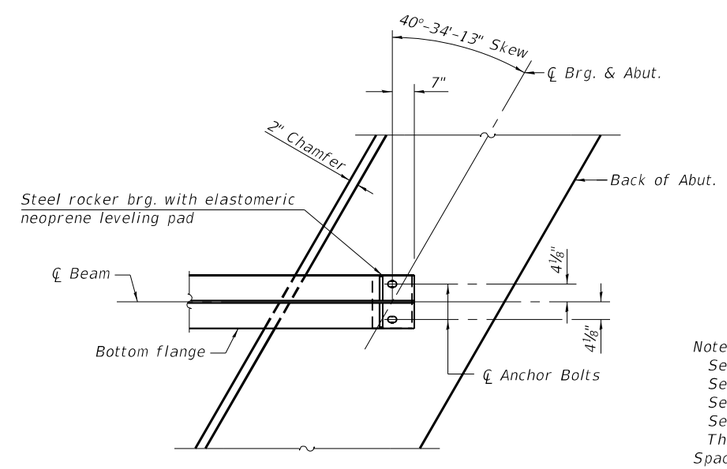

PLAN AT ABUTMENT

(Showing bottom flange of beam)

Notes:

See sheet 11 of 38 for superstructure details and Bill of Material.
See sheet 16 of 38 for PJF details.
See sheet 22 of 38 for Top Flange Clip detail.
See sheet 23 of 38 for Bearing details.
The s110(E) and s111(E) bars shall be placed parallel to the beams. Spacing for these bars shall be at right angles to the beams.
The approach slab seat shall have a constant slope determined from the control points shown.

MODEL: Default
FILE NAME: L:\DOT\1950861\0\WO_8\Draw\Structures\SN 17-18\0144-Diaphragm Details 041-0117 (NB).dgn

CMT License No. 184-000613 © Copyright CMT, Inc.	USER NAME = Albert Reinwart	DESIGNED - AFR	REVISED -	STATE OF ILLINOIS DEPARTMENT OF TRANSPORTATION	DIAPHRAGM DETAILS STRUCTURE NO. 041-0117 (NB)	F.A.I. RTE.	SECTION	COUNTY	TOTAL SHEETS / SHEET NO.
		CHECKED - LM	REVISED -			57	(41-4)B-1	JEFFERSON	257 / 153
	PLOT SCALE = N/A	DRAWN - GLD	REVISED -					CONTRACT NO. 78550	
	PLOT DATE = 4/30/2021 (12:00:13 PM)	CHECKED - LM	REVISED -		SHEET 14 OF 38 SHEETS		ILLINOIS	FED. AID PROJECT	

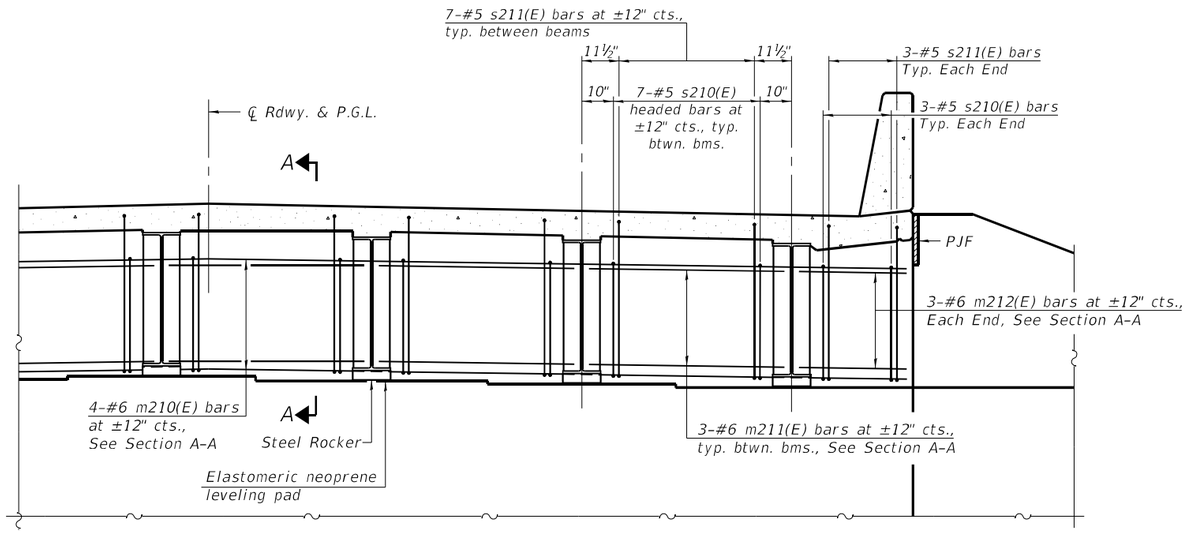

DIAPHRAGM AT ABUTMENT

(Horizontal Dimensions at Rt. ∠'s with Lanes)

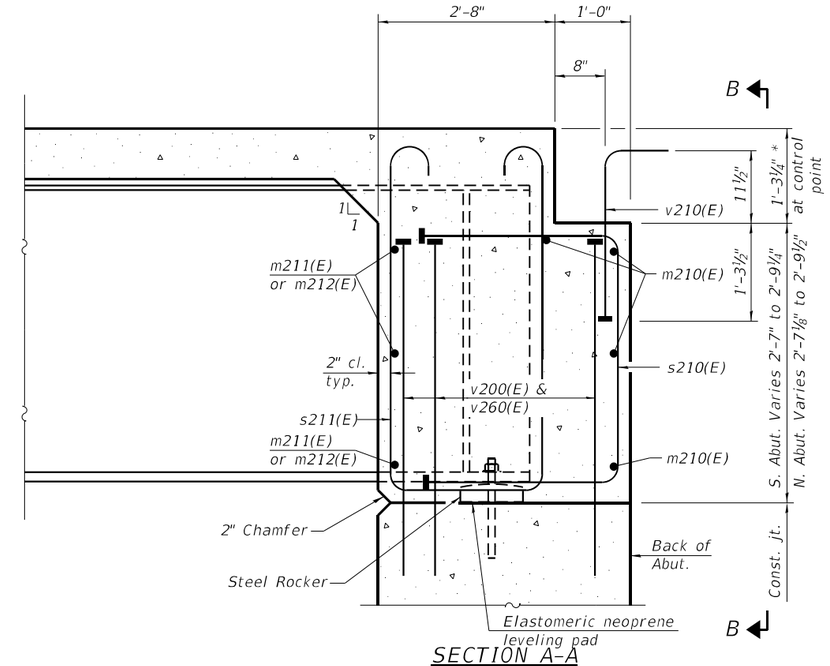

SECTION A-A

(at Rt. ∠'s)

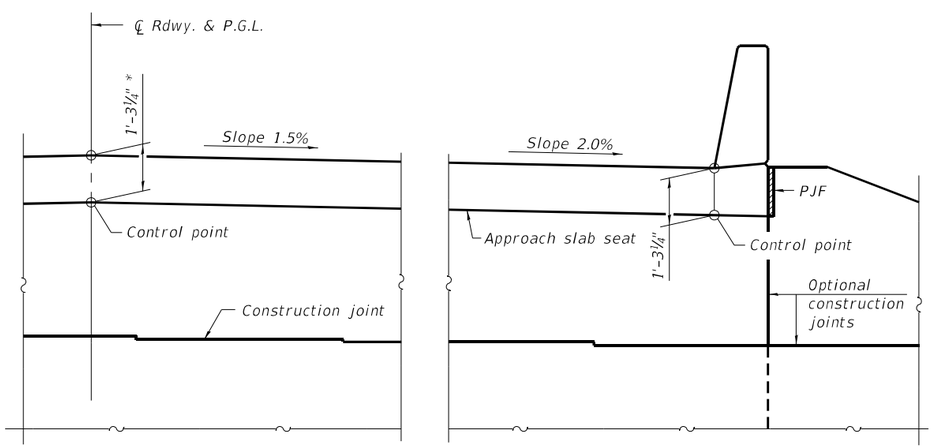

VIEW B-B

*Prior to grinding

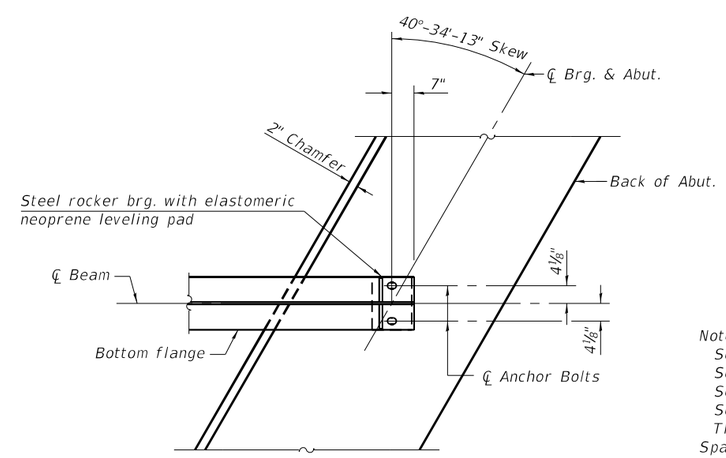

PLAN AT ABUTMENT

(Showing bottom flange of beam)

Notes:

See sheet 13 of 38 for superstructure details and Bill of Material.
See sheet 18 of 38 for PJF details.
See sheet 22 of 38 for Top Flange Clip detail.
See sheet 23 of 38 for Bearing details.
The s210(E) and s211(E) bars shall be placed parallel to the beams. Spacing for these bars shall be at right angles to the beams.
The approach slab seat shall have a constant slope determined from the control points shown.

MODEL: Default
FILE NAME: L:\DOT\1950861\0\WO_8\Draw\Structures\SN 17-18\015-Diaphragm Details 041-0118 (SB).dgn

CMT License No. 184-000613 © Copyright CMT, Inc.	USER NAME = Albert Reinwart	DESIGNED - AFR	REVISED -	STATE OF ILLINOIS DEPARTMENT OF TRANSPORTATION	DIAPHRAGM DETAILS STRUCTURE NO. 041-0118 (SB)
		CHECKED - LM	REVISED -		
	PLOT SCALE = N/A	DRAWN - GLD	REVISED -		
	PLOT DATE = 4/30/2021 (12:00:14 PM)	CHECKED - LM	REVISED -		SHEET 15 OF 38 SHEETS

F.A.I. RTE.	SECTION	COUNTY	TOTAL SHEETS	SHEET NO.
57	(41-4)B-1	JEFFERSON	257	154
		CONTRACT NO. 78550		
	ILLINOIS	FED. AID PROJECT		

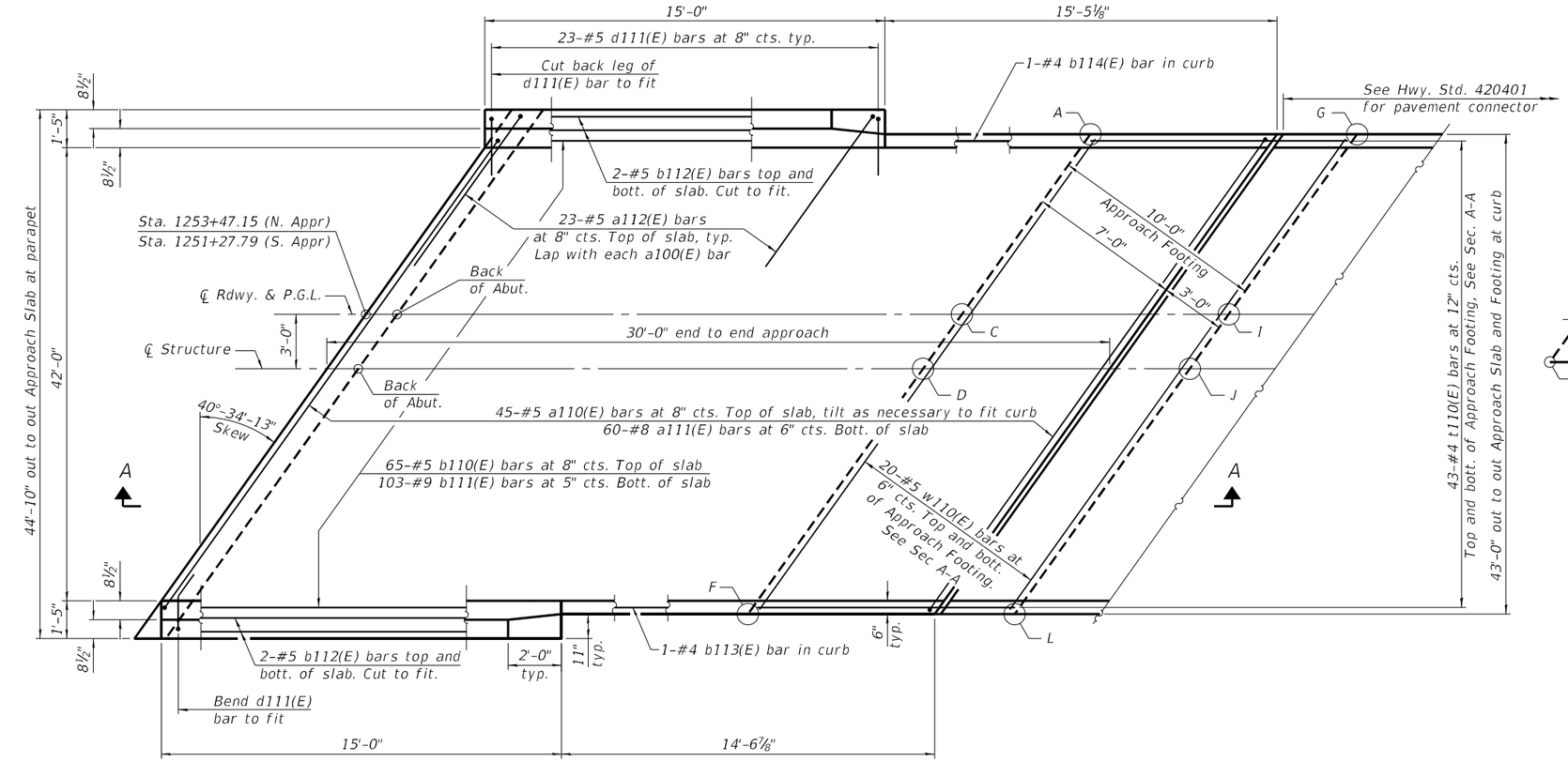

PLAN

(Showing North Approach - South Approach Similar)

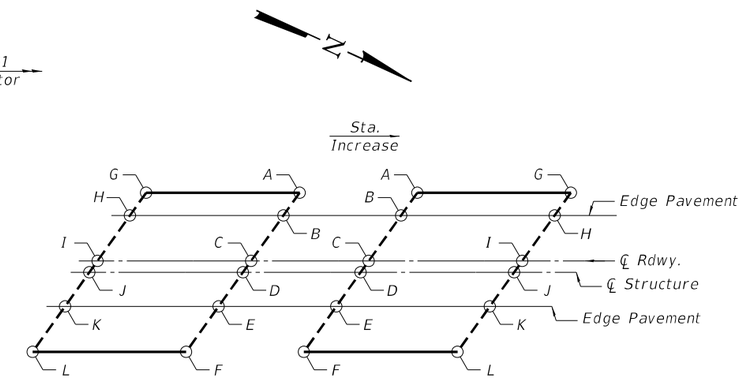

PLAN

TOP AND BOTTOM ELEVATIONS FOR APPROACH FOOTING

	South Approach		North Approach	
Point	Top	Bottom	Top	Bottom
A	588.36	587.53	587.85	587.02
B	588.47	587.64	588.01	587.17
C	588.63	587.79	588.25	587.41
D	588.57	587.74	588.21	587.38
E	588.42	587.58	588.12	587.29
F	588.14	587.31	587.94	587.10
G	588.33	587.50	587.77	586.94
H	588.44	587.60	587.92	587.09
I	588.59	587.75	588.17	587.33
J	588.53	587.70	588.14	587.31
K	588.37	587.54	588.05	587.22
L	588.09	587.26	587.87	587.03

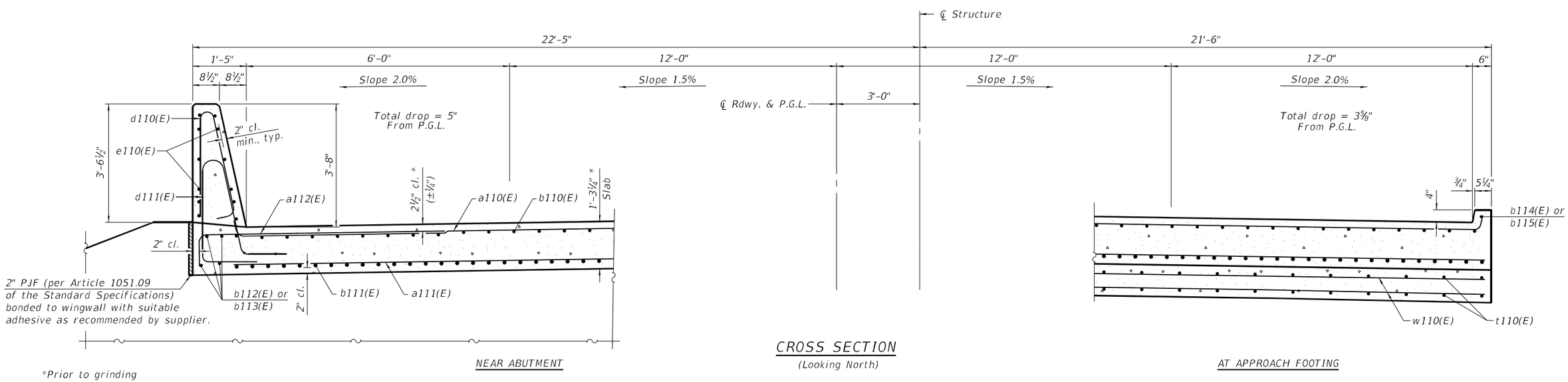

NEAR ABUTMENT

CROSS SECTION

(Looking North)

AT APPROACH FOOTING

*Prior to grinding

MODEL: Default
FILE NAME: L:\IDOT\1806810\WO_6\Draw\Structures\SN 17-18\016-Approach Slab Dtls 1 NB (041-0117).dgn

CMT
License No. 184-000613
© Copyright CMT, Inc.

USER NAME = Albert Reinwart	DESIGNED - AFR	REVISED -	
	CHECKED - LM	REVISED -	
PLOT SCALE = N/A	DRAWN - GLD	REVISED -	
PLOT DATE = 4/30/2021 (12:00:15 PM)	CHECKED - LM	REVISED -	

STATE OF ILLINOIS
DEPARTMENT OF TRANSPORTATION

BRIDGE APPROACH SLAB DETAILS 1
STRUCTURE NO. 041-0117 (NB)

SHEET 16 OF 38 SHEETS

F.A.I. RTE.	SECTION	COUNTY	TOTAL SHEETS	SHEET NO.
57	(41-4)B-1	JEFFERSON	257	155
		CONTRACT NO. 78550		
		ILLINOIS FED. AID PROJECT		

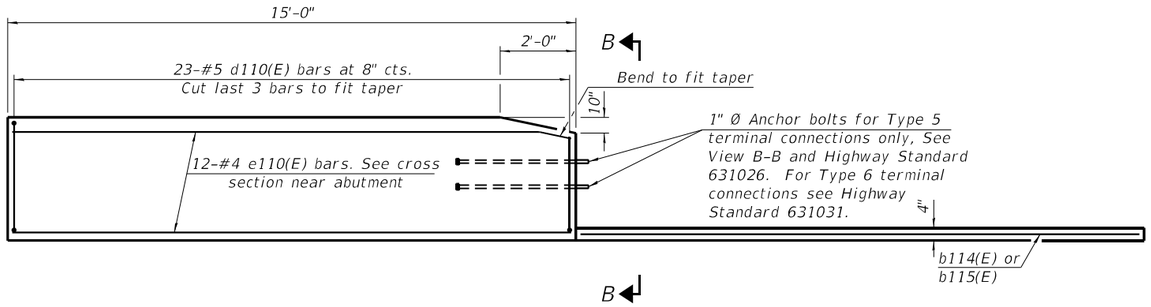

INSIDE ELEVATION OF PARAPET AND CURB

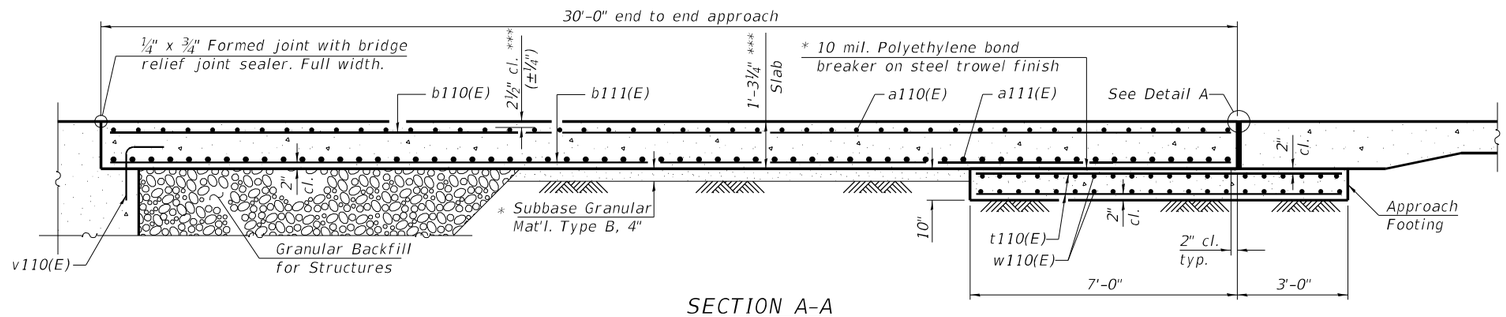

SECTION A-A

***Prior to grinding

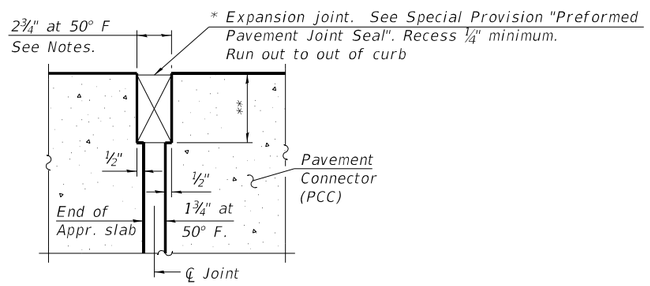

DETAIL A

(@ Rt. ∠'s)

* Cost included with Concrete Superstructure (Approach Slab).

** Per manufacturer recommendations

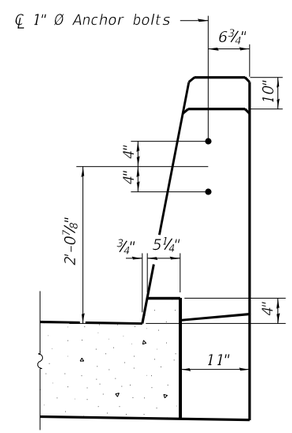

VIEW B-B

Notes:

The joint opening shall be adjusted for temperature per Article 520.04 of the Standard Specifications. However, since this detail is for jointless structures, the length of bridge used to calculate the adjustment shall be equal to half the total bridge length plus the length of the bridge approach slab.

Parapet concrete shall be paid for as Concrete Superstructure.

Approach slab shall be paid for as Concrete Superstructure (Approach Slab).

Approach footing concrete shall be paid for as Concrete Structures.

The approach footing maximum applied service bearing pressure (Qmax) = 2.0 ksf.

Cost of excavation for approach footing included with Concrete Structures.

For Granular Backfill for Structures and drainage treatment details, see sheet 2 of 38.

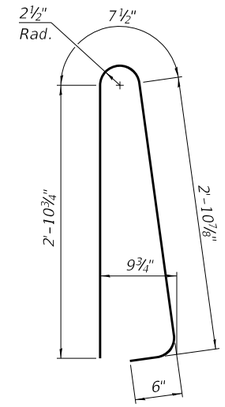

BAR d110(E)

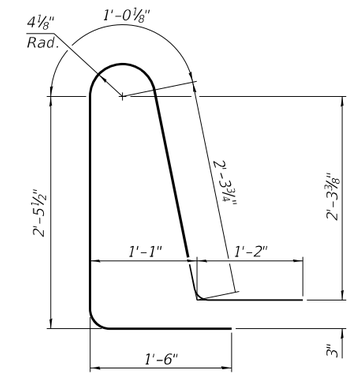

BAR d111(E)

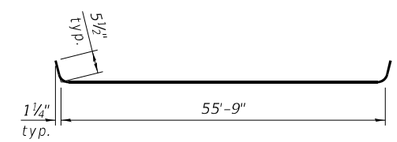

BAR a110(E)

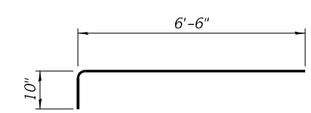

BAR a112(E)

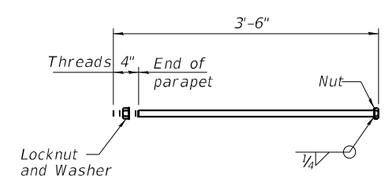

*1" Ø ANCHOR BOLT

(Anchor bolt assemblies shall be galvanized according to Article 1006.09 of the Standard Specifications)

TWO APPROACHES BILL OF MATERIAL

Bar	No.	Size	Length	Shape
a110(E)	90	#5	56'-8"	
a111(E)	120	#8	56'-2"	
a112(E)	92	#5	7'-4"	
b110(E)	130	#5	29'-8"	
b111(E)	206	#9	29'-8"	
b112(E)	16	#5	14'-8"	
b113(E)	2	#4	14'-5"	
b114(E)	2	#4	14'-10"	
d110(E)	92	#5	7'-0"	
d111(E)	92	#5	8'-6"	
e110(E)	48	#4	14'-8"	
t110(E)	172	#4	12'-8"	
w110(E)	80	#5	56'-2"	
Concrete Structures			Cu. Yd.	34.9
Concrete Superstructure			Cu. Yd.	8.5
Protective Coat			Sq. Yd.	315
Concrete Superstructure (Approach Slab)			Cu. Yd.	124.6
Reinforcement Bars, Epoxy Coated			Pound	57,220
Bridge Deck Grooving (Longitudinal)			Sq. Yd.	160

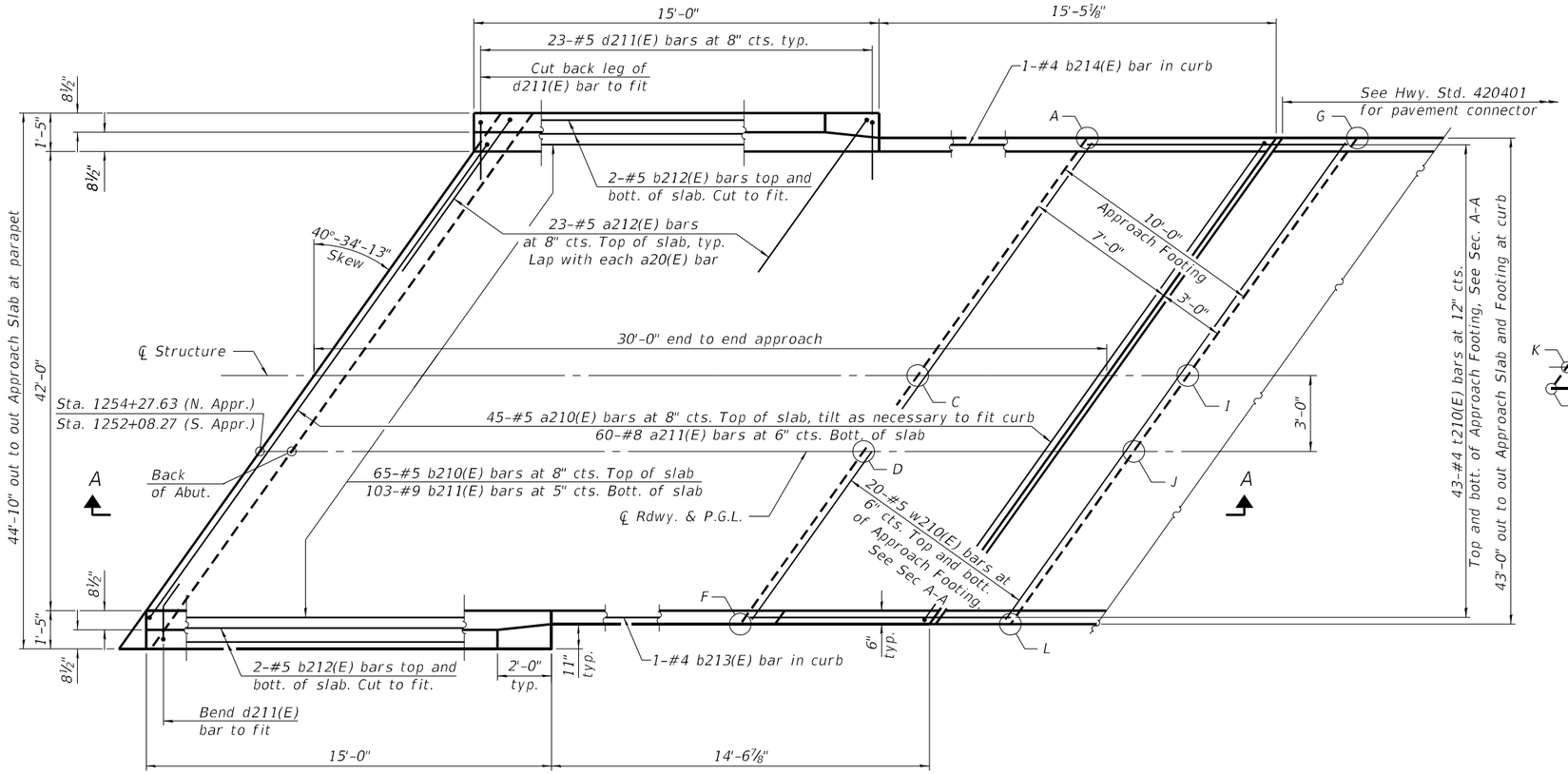

PLAN

(Showing North Approach - South Approach similar)

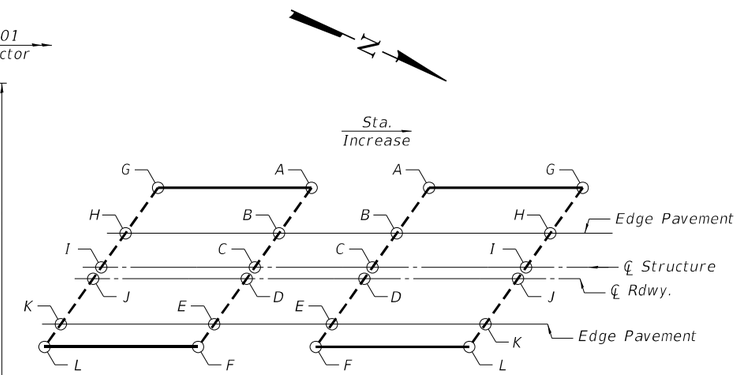

PLAN

TOP AND BOTTOM ELEVATIONS FOR APPROACH FOOTING

	South Approach		North Approach	
Point	Top	Bottom	Top	Bottom
A	587.79	586.96	586.69	585.86
B	588.04	587.21	587.01	586.18
C	588.18	587.34	587.20	586.37
D	588.22	587.39	587.27	586.43
E	588.05	587.21	587.16	586.32
F	587.92	587.09	587.07	586.24
G	587.80	586.97	586.59	585.76
H	588.04	587.21	586.91	586.08
I	588.18	587.35	587.11	586.27
J	588.22	587.39	587.17	586.34
K	588.04	587.21	587.07	586.24
L	587.92	587.09	586.98	586.15

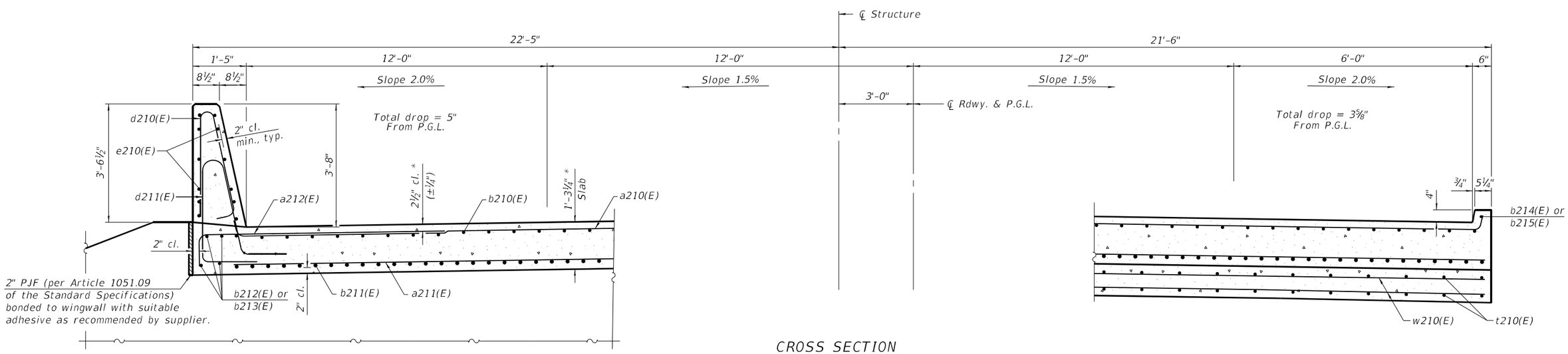

NEAR ABUTMENT

CROSS SECTION

(Looking North)

AT APPROACH FOOTING

*Prior to grinding

MODEL: Default
FILE NAME: L:\IDOT\1906610\WO_ib\Draw\Structures\SN 17-18\018-Approach Slab Dtls 1 SB (041-0118).dgn

CMT
License No. 184-000613
© Copyright CMT, Inc.

USER NAME = Albert Reinwart	DESIGNED - AFR	REVISED -	
	CHECKED - LM	REVISED -	
PLOT SCALE = N/A	DRAWN - GLD	REVISED -	
PLOT DATE = 4/30/2021 (12:00:17 PM)	CHECKED - LM	REVISED -	

STATE OF ILLINOIS
DEPARTMENT OF TRANSPORTATION

BRIDGE APPROACH SLAB DETAILS 1
STRUCTURE NO. 041-0118 (SB)

SHEET 18 OF 38 SHEETS

F.A.I. RTE.	SECTION	COUNTY	TOTAL SHEETS	SHEET NO.
57	(41-4)B-1	JEFFERSON	257	157
		CONTRACT NO. 78550		
		ILLINOIS	FED. AID PROJECT	

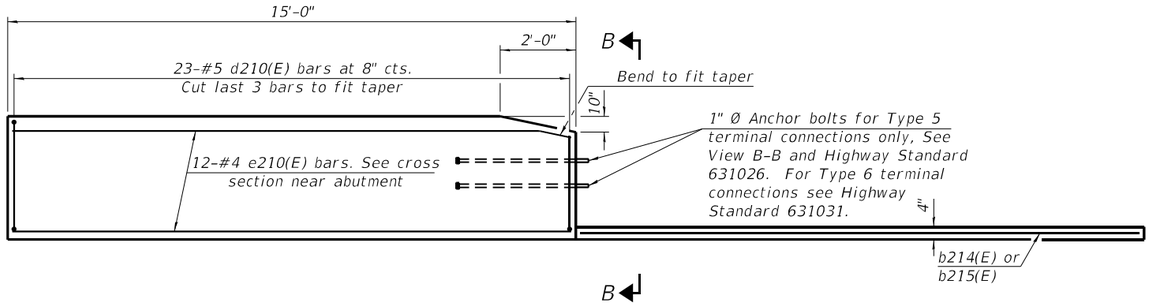

INSIDE ELEVATION OF PARAPET AND CURB

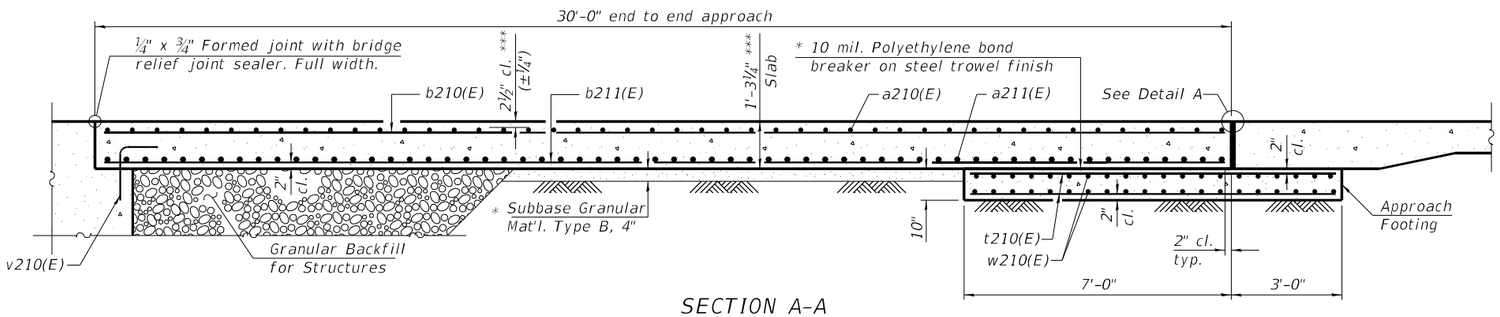

SECTION A-A

***Prior to grinding

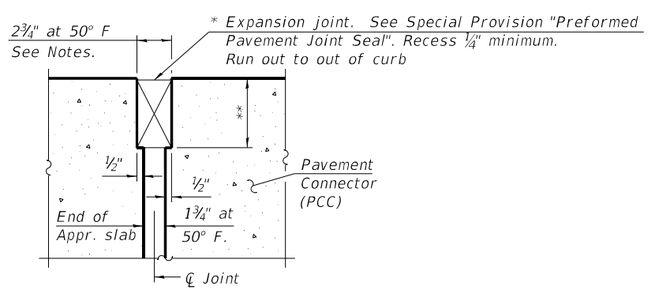

DETAIL A

(@ Rt. ∠'s)

* Cost included with Concrete Superstructure (Approach Slab).

** Per manufacturer recommendations

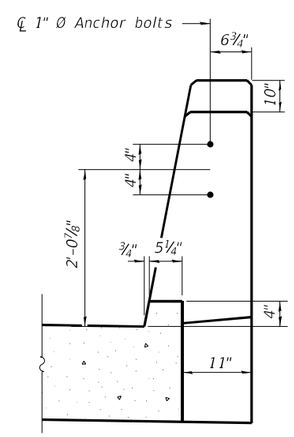

VIEW B-B

Notes:

The joint opening shall be adjusted for temperature per Article 520.04 of the Standard Specifications. However, since this detail is for jointless structures, the length of bridge used to calculate the adjustment shall be equal to half the total bridge length plus the length of the bridge approach slab.

Parapet concrete shall be paid for as Concrete Superstructure.

Approach slab shall be paid for as Concrete Superstructure (Approach Slab).

Approach footing concrete shall be paid for as Concrete Structures.

The approach footing maximum applied service bearing pressure (Qmax) = 2.0 ksf.

Cost of excavation for approach footing included with Concrete Structures.

For Granular Backfill for Structures and drainage treatment details, see sheet 2 of 38.

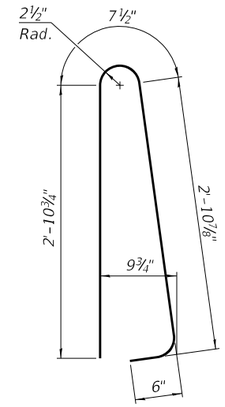

BAR d210(E)

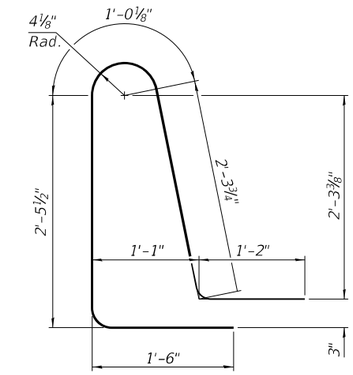

BAR d211(E)

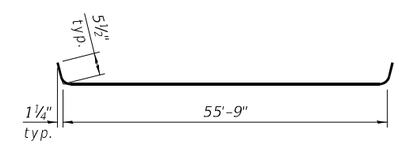

BAR a210(E)

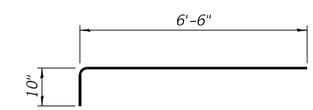

BAR a212(E)

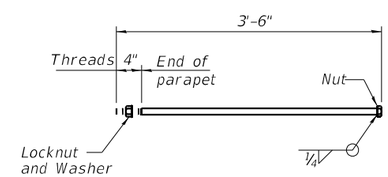

*1" Ø ANCHOR BOLT

(Anchor bolt assemblies shall be galvanized according to Article 1006.09 of the Standard Specifications)

TWO APPROACHES BILL OF MATERIAL

Bar	No.	Size	Length	Shape
a210(E)	90	#5	56'-8"	
a211(E)	120	#8	56'-2"	
a212(E)	92	#5	7'-4"	
b210(E)	130	#5	29'-8"	
b211(E)	206	#9	29'-8"	
b212(E)	16	#5	14'-8"	
b213(E)	2	#4	14'-5"	
b214(E)	2	#4	14'-10"	
d210(E)	92	#5	7'-0"	
d211(E)	92	#5	8'-6"	
e210(E)	48	#4	14'-8"	
t210(E)	172	#4	12'-8"	
w210(E)	80	#5	56'-2"	
Concrete Structures			Cu. Yd.	34.9
Concrete Superstructure			Cu. Yd.	8.5
Protective Coat			Sq. Yd.	315
Concrete Superstructure (Approach Slab)			Cu. Yd.	124.6
Reinforcement Bars, Epoxy Coated			Pound	57,200
Bridge Deck Grooving (Longitudinal)			Sq. Yd.	160

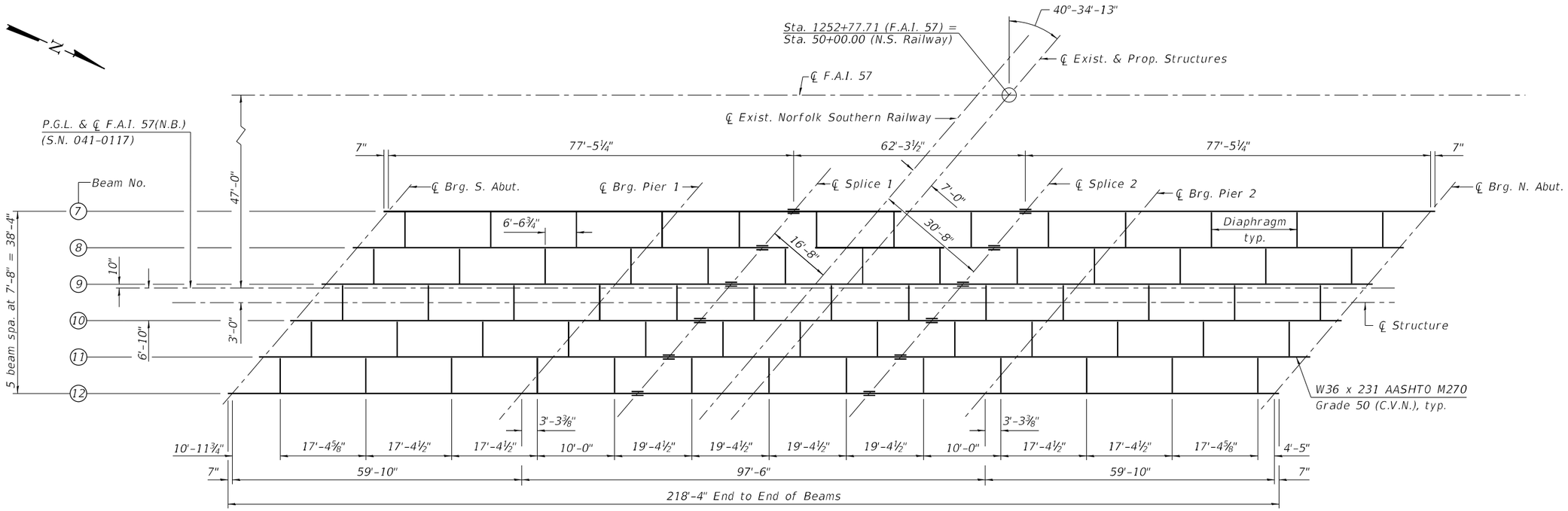

FRAMING PLAN
(SN 041-0117)

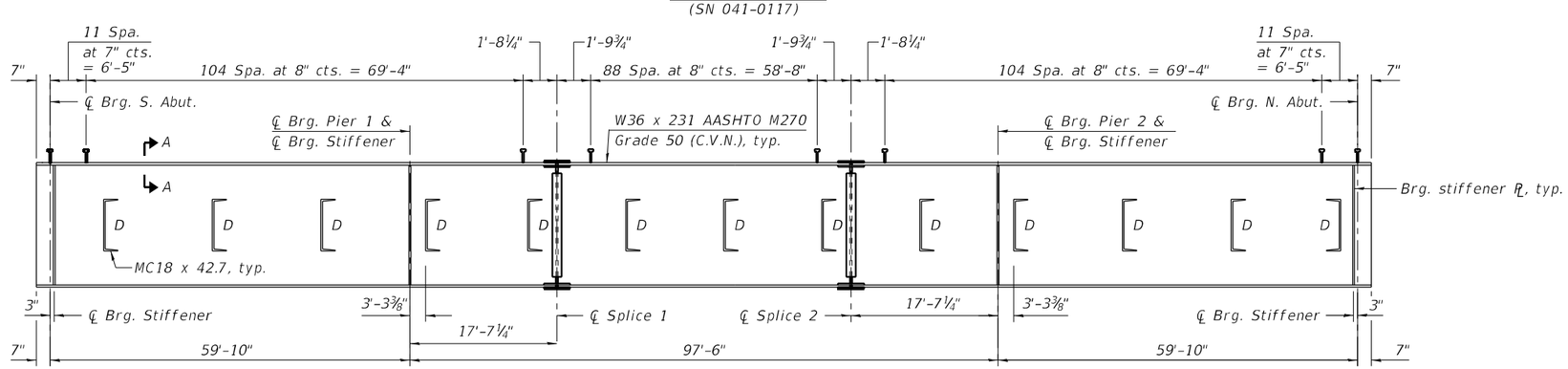

BEAM ELEVATION

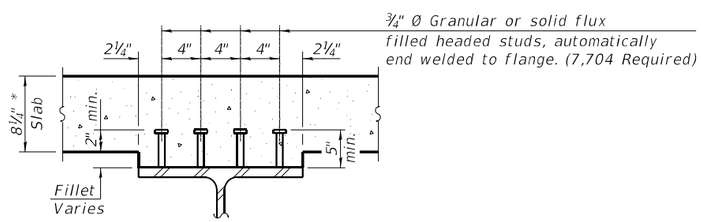

SECTION A-A

*Prior to grinding.

TOP OF BEAM ELEVATIONS

LOCATION	BEAM 7	BEAM 8	BEAM 9	BEAM 10	BEAM 11	BEAM 12
℄ Brg. S. Abut.	588.97	589.09	589.20	589.09	588.95	588.78
℄ Brg. Pier 1	588.99	589.13	589.25	589.16	589.03	588.87
℄ Splice 1	589.00	589.14	589.26	589.17	589.05	588.89
℄ Splice 2	588.86	589.02	589.15	589.08	588.96	588.82
℄ Brg. Pier 2	588.79	588.95	589.09	589.02	588.91	588.77
℄ Brg. N. Abut.	588.55	588.73	588.87	588.82	588.72	588.60

For fabrication use only.

Notes:
All diaphragms shall be installed as steel is erected and secured with erection pins and bolts except as otherwise noted. Individual diaphragms at supports may be temporarily disconnected to install bearing anchor rods.
"C.V.N." denotes Charpy-V-Notch impact energy requirements, Zone 2.

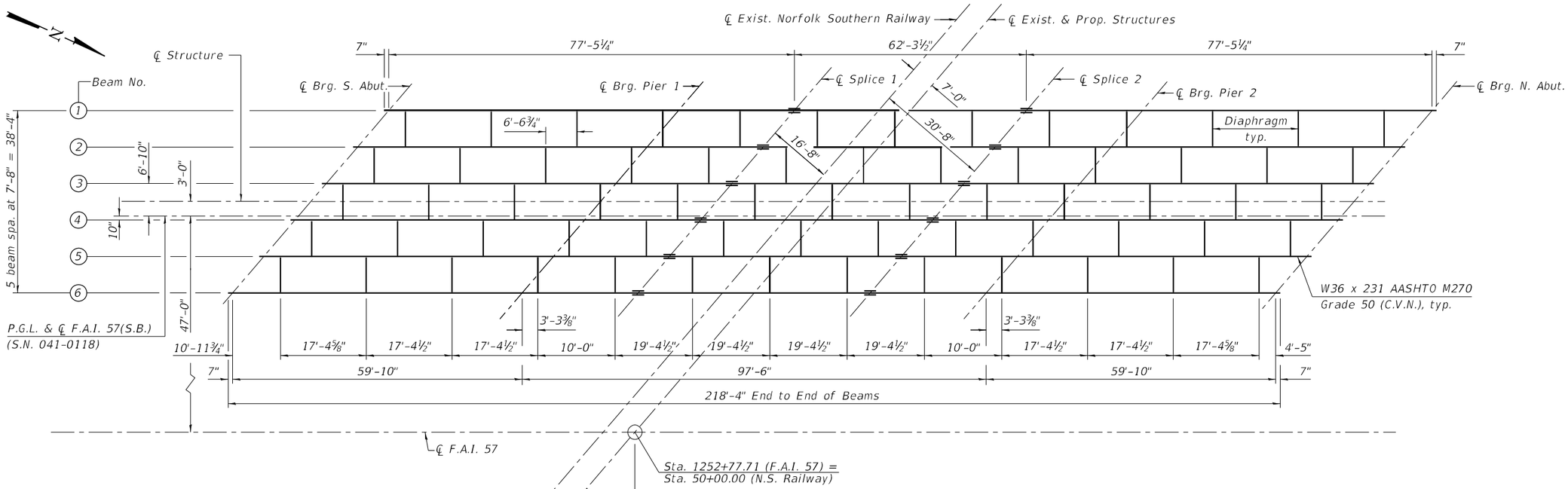

FRAMING PLAN
(SN 041-0118)

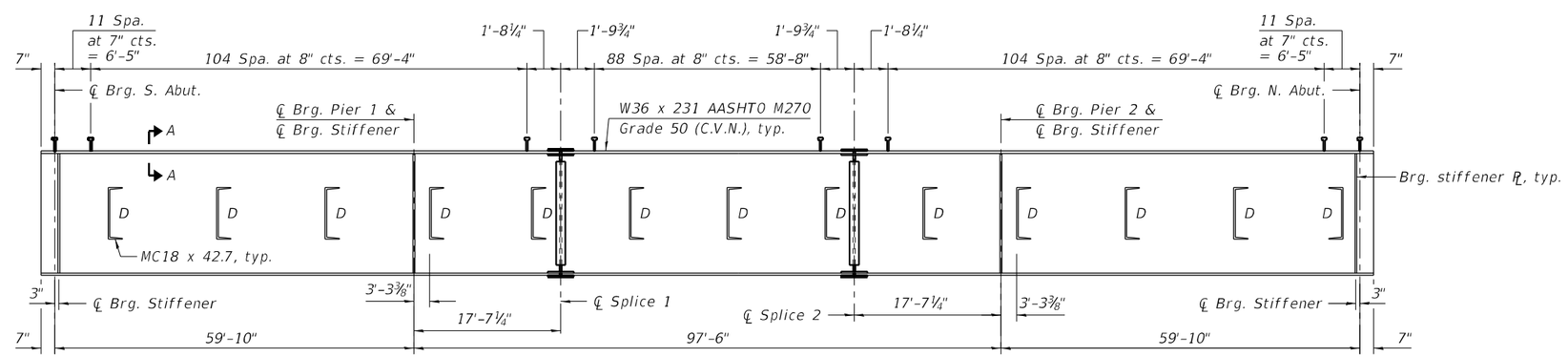

BEAM ELEVATION

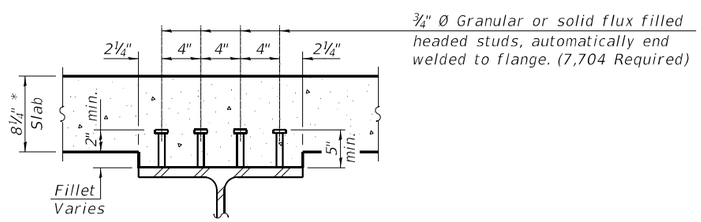

SECTION A-A

*Prior to grinding.

TOP OF BEAM ELEVATIONS

LOCATION	BEAM 1	BEAM 2	BEAM 3	BEAM 4	BEAM 5	BEAM 6
℄ Brg. S. Abut.	588.34	588.50	588.63	588.73	588.62	588.49
℄ Brg. Pier 1	588.20	588.37	588.52	588.62	588.52	588.40
℄ Splice 1	588.16	588.34	588.48	588.59	588.50	588.38
℄ Splice 2	587.88	588.07	588.23	588.35	588.26	588.15
℄ Brg. Pier 2	587.78	587.97	588.13	588.25	588.17	588.07
℄ Brg. N. Abut.	587.43	587.63	587.80	587.94	587.86	587.77

For fabrication use only.

Notes:
All diaphragms shall be installed as steel is erected and secured with erection pins and bolts except as otherwise noted. Individual diaphragms at supports may be temporarily disconnected to install bearing anchor rods.
"C.V.N." denotes Charpy-V-Notch impact energy requirements, Zone 2.

MODEL: Default
FILE NAME: L:\IDOT\1190861\0\WO_8\Draw\Structures\SN 17-18\021-Framing plan-elev_SB (041-0118).dgn

CMT
License No. 184-000613
© Copyright CMT, Inc.

USER NAME = Albert Reinwart	DESIGNED - JMW	REVISED -	
	CHECKED - LM	REVISED -	
PLOT SCALE = N/A	DRAWN - GLD	REVISED -	
PLOT DATE = 4/30/2021 (12:00:25 PM)	CHECKED - LM	REVISED -	

STATE OF ILLINOIS
DEPARTMENT OF TRANSPORTATION

FRAMING PLAN & ELEVATION
STRUCTURE NO. 041-0118 (SB)

SHEET 21 OF 38 SHEETS

F.A.I. RTE.	SECTION	COUNTY	TOTAL SHEETS	SHEET NO.
57	(41-4)B-1	JEFFERSON	257	160
		CONTRACT NO. 78550		
	ILLINOIS	FED. AID PROJECT		

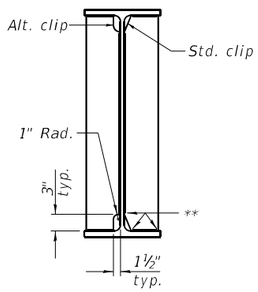

WELD LIMITS AND CLIP DETAILS

** Stop welds ¼" (±⅛") from edges as shown. Typ.

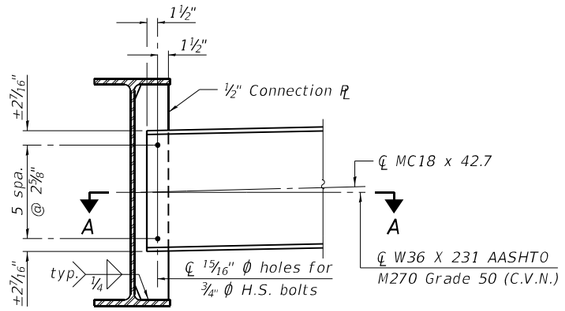

DIAPHRAGM D

(65 Required for SN 041-0117)
(65 Required for SN 041-0118)

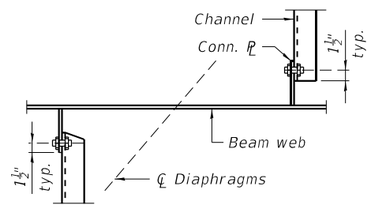

SECTION A-A

Notes:

Two hardened washers required for each set of oversized holes.

Alternate channels of equal depth and larger weight are permitted to facilitate material aquisition. Alternate channels, if utilized, shall be provided at no additional cost to the Department.

INTERIOR BEAM MOMENT TABLE					
		0.4 Sp. 1/ 0.6 Sp. 3	Pier 1	0.5 Sp. 2	Pier 2
Is	(in⁴)	15600	15600	15600	15600
Ic(n)	(in⁴)	41069	41069	41069	41069
Ic(3n)	(in⁴)	29597	29597	29597	29597
Ic(cr)	(in⁴)	–	19833	–	19833
Ss	(in³)	855	855	855	855
Sc(n)	(in³)	1243	1243	1243	1243
Sc(3n)	(in³)	1119	1119	1119	1119
Sc(cr)	(in³)	–	958	–	958
DC1	(k/')	1.115	1.115	1.115	1.115
MDC1	('k)	173	-764	561	-764
DC2	(k/')	0.190	0.190	0.190	0.190
MDC2	('k)	30	-132	94	-132
DW	(k/')	0.350	0.350	0.350	0.350
MDW	('k)	53	-242	174	-242
LLDF		0.670	0.670	0.670	0.670
M_{LL+IM}	('k)	756	-1015	1059	-1015
Mu (Strength I)	('k)	1656	3259	2933	3259
Ø f Mn	('k)	5846	3735	5846	3710
fs DC1	(ksi)	2.43	-10.72	7.87	-10.72
fs DC2	(ksi)	0.32	-1.42	1.01	-1.42
fs DW	(ksi)	0.57	-2.60	1.87	-2.60
fs (LL+IM)	(ksi)	7.30	-9.80	10.22	-9.80
fs (Service II)	(ksi)	12.81	-27.48	24.04	-27.48
0.95Rh Fyf	(ksi)	47.50	47.50	47.50	47.50
fs (Total)(Strength I)	(ksi)	17.07	-36.23	31.79	-36.23
Ø f Fn	(ksi)	50	48.8	50	49.1
Vf	(k)	68.74	70.45	68.83	78.26

Note: DC2 includes the weight of the barrier. At the abutments the weight of the concrete diaphragm was added. This is reflected in MDC2.

INTERIOR BEAM REACTION TABLE					
		Abut.		Pier	
		Interior	Exterior	Interior	Exterior
LLDF		0.922	0.722	0.791	0.722
OCF		–	1.17	–	1.17
R_{DC1}	(k)	21.2	20.8	100.5	98.7
R_{DC2}	(k)	19.4	18.4	17.2	17.2
R_{DW}	(k)	6.4	6.4	31.6	31.6
R_{LL}	(k)	70.5	55.2	126.6	99.2
R_{IM}	(k)	17.9	14.0	25.4	19.8
R_{Total}	(k)	135.4	114.8	301.3	266.5

Note: At the abutment the weight of the concrete diaphragm was added. This is reflected in R_{DC2}.

Is, Ss: Non-composite moment of inertia and section modulus of the steel section used for computing fs(Total-Strength I, and Service II) due to non-composite dead loads (in.⁴ and in.³).

Ic(n), Sc(n): Composite moment of inertia and section modulus of the steel and deck based upon the modular ratio, "n", used for computing fs(Total-Strength I, and Service II) in uncracked sections due to short-term composite live loads (in.⁴ and in.³).

Ic(3n), Sc(3n): Composite moment of inertia and section modulus of the steel and deck based upon 3 times the modular ratio, "3n", used for computing fs(Total-Strength I, and Service II) in uncracked sections, due to long-term composite (superimposed) dead loads (in.⁴ and in.³).

Ic(cr), Sc(cr): Composite moment of inertia and section modulus of the steel and longitudinal deck reinforcement, used for computing fs (Total-Strength I and Service II) in cracked sections, due to both short-term composite live loads and long-term composite (superimposed) dead loads (in.⁴ and in.³).

DC1: Un-factored non-composite dead load (kips/ft.).

MDC1: Un-factored moment due to non-composite dead load (kip-ft.).

DC2: Un-factored long-term composite (superimposed excluding future wearing surface) dead load (kips/ft.).

MDC2: Un-factored moment due to long-term composite (superimposed excluding future wearing surface) dead load (kip-ft.).

DW: Un-factored long-term composite (superimposed future wearing surface only) dead load (kips/ft.).

MDW: Un-factored moment due to long-term composite (superimposed future wearing surface only) dead load (kip-ft.).

M_{LL+IM}: Un-factored live load moment plus dynamic load allowance (impact) (kip-ft.).

Mu (Strength I): Factored design moment (kip-ft.).
1.25 (MDC1 + MDC2) + 1.5 MDW + 1.75 M_{LL+IM}

Ø f Mn: Compact composite positive moment capacity computed according to Article 6.10.7.1 or non-slender negative moment capacity according to Article A6.1.1 or A6.1.2 (kip-ft).

fs DC1: Un-factored stress at edge of flange for controlling steel flange due to vertical non-composite dead loads as calculated below (ksi).
MDC1/ Snc

fs DC2: Un-factored stress at edge of flange for controlling steel flange due to vertical composite dead loads as calculated below (ksi).
MDC2/ Sc(3n) or MDC2/ Sc(cr) as applicable.

fs DW: Un-factored stress at edge of flange for controlling steel flange due to vertical composite future wearing surface loads as calculated below (ksi).
MDW/ Sc(3n) or MDW/ Sc(cr) as applicable.

fs (LL+IM): Un-factored stress at edge of flange for controlling steel flange due to vertical composite live load plus impact loads as calculated below (ksi).
M_{LL+IM} / Sc(n) or M_{LL+IM} / Sc(cr) as applicable.

fs (Service II): Sum of stresses as computed below (ksi).
fsDC1 + fsDC2 + fsDW + 1.3 fs($_{LL+IM}$)

0.95RhFyf: Composite stress capacity for Service II loading according to Article 6.10.4.2 (ksi).

fs (Total)(Strength I): Sum of stresses as computed below on non-compact section (ksi).
1.25 (fsDC1 + fsDC2) + 1.5 fsDW + 1.75 fs($_{LL+IM}$)

Ø f Fn: Non-Compact composite positive or negative stress capacity for Strength I loading according to Article 6.10.7 or 6.10.8 (ksi).

Vf: Maximum factored shear range in span computed according to Article 6.10.10.

OCF: Obtuse correction factor

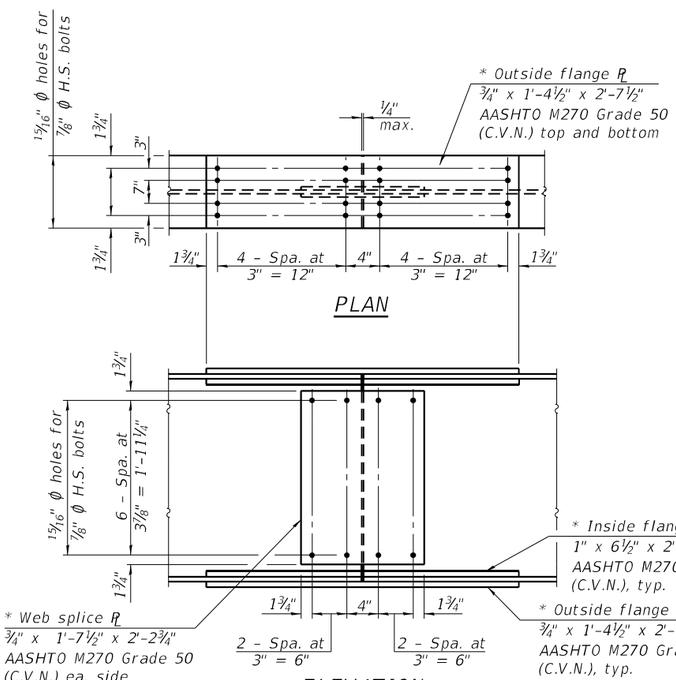

SPLICE DETAIL

(12 Required for SN 041-0117)
(12 Required for SN 041-0118)

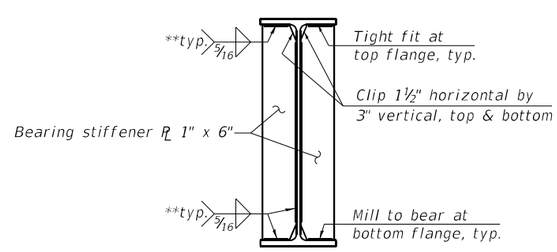

BEARING STIFFENER

(48 Required for SN 041-0117)
(48 Required for SN 041-0118)
** Stop welds ¼" (±⅛") from edges of plate, typ.

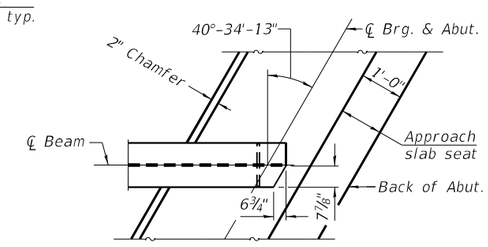

TOP FLANGE PLAN - CLIPPED

Notes:

See Sheet 20 and 21 for Diaphragm & Splice locations.

"C.V.N." denotes Charpy-V-Notch impact energy requirements, Zone 2.

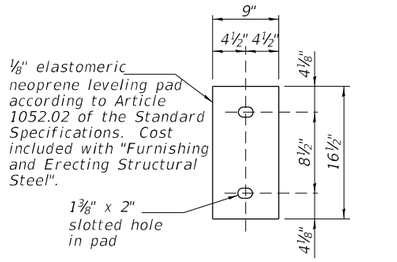

PLAN
ELASTOMERIC NEOPRENE LEVELING PAD (ABUT.)
(12 Required for SN 041-0117)
(12 Required for SN 041-0118)

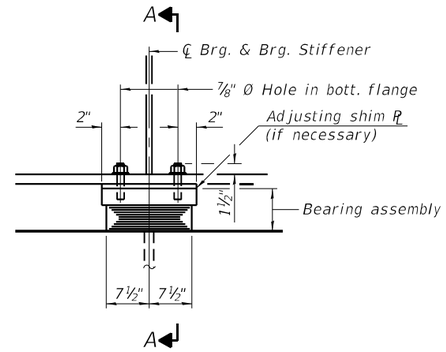

ELEVATION AT PIER

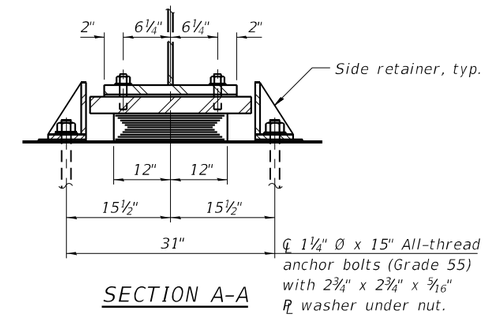

SECTION A-A

TYPE I ELASTOMERIC EXP. BRG. AT PIERS 1 & 2

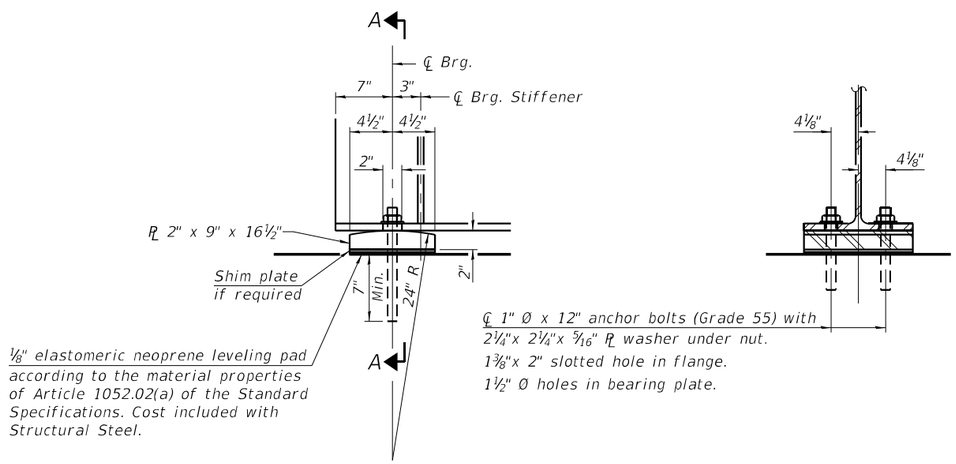

ELEVATION

SECTION A-A

FIXED BEARING AT ABUTMENT

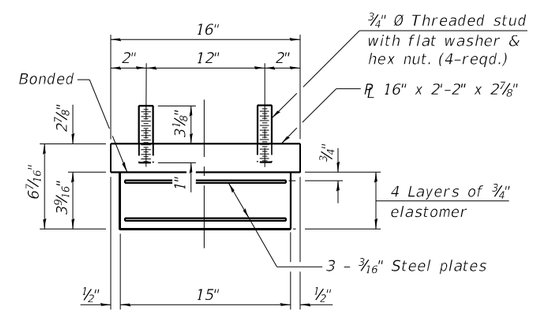

BEARING ASSEMBLY

Notes:
Side retainers and stainless steel plates shall be included in the cost of Elastomeric Bearing Assembly, Type I.
Anchor bolts and side retainers at all supports shall be installed as each member is erected unless an equivalent temporary means of lateral restraint is used.

Note:
Shim plates shall not be placed under bearing assembly.

Notes:
Anchor bolts shall be ASTM F1554 all-thread (or an Engineer-approved alternate material) of the grade and diameter(s) specified. The corresponding specified grade of AASHTO M314 anchor bolts may be used in lieu of ASTM F1554.
Anchor bolts may be either cast in place or installed in holes drilled after the supported member is in place.
Two 1/8 in. adjusting shims shall be provided for each bearing in addition to all other plates or shims and placed as shown on bearing details.
The existing structural steel coating contains lead. The Contractor shall take appropriate precautions to deal with the presence of lead on this project.
Anchor bolts shall be according to Article 521.06 of the Standard Specifications.
Beams shall be braced for stability during erection and remain braced until deck is poured and cured.
Anchor bolts at all supports shall be installed as each member is erected unless an equivalent temporary means of lateral restraint is used.
Anchor bolts at all supports shall be installed 28 days before the deck is poured.

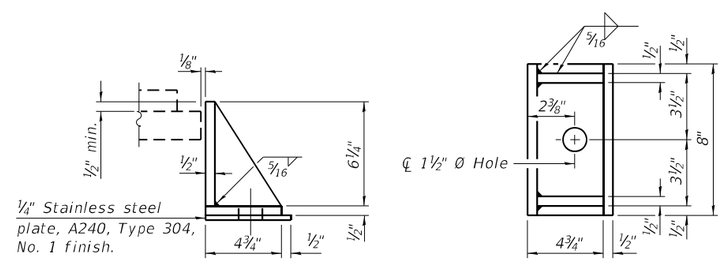

SIDE RETAINER
Equivalent rolled angle with stiffeners will be allowed in lieu of welded plates.

BILL OF MATERIAL

Item	Unit	Total
Elastomeric Bearing Assembly Type I	Each	24
Anchor Bolts, 1¼"	Each	48
Anchor Bolts, 1"	Each	48

MODEL: Default
FILE NAME: L:\IDOT\1806810\WO_06\Drawi\Structures\SN 17-18\023-Bearing Details.dgn

CMT
License No. 184-000613
© Copyright CMT, Inc.

USER NAME = Albert Reinwart	DESIGNED - JMW	REVISED -	
	CHECKED - FAS	REVISED -	
PLOT SCALE = N/A	DRAWN - JMW	REVISED -	
PLOT DATE = 4/30/2021 (12:00:31 PM)	CHECKED - FAS	REVISED -	

STATE OF ILLINOIS
DEPARTMENT OF TRANSPORTATION

BEARING DETAILS
STRUCTURE NO. 041-0117 (NB) & 041-0118 (SB)
SHEET 23 OF 38 SHEETS

F.A.I. RTE.	SECTION	COUNTY	TOTAL SHEETS	SHEET NO.
57	(41-4)B-1	JEFFERSON	257	162
		CONTRACT NO. 78550		
		ILLINOIS FED. AID PROJECT		

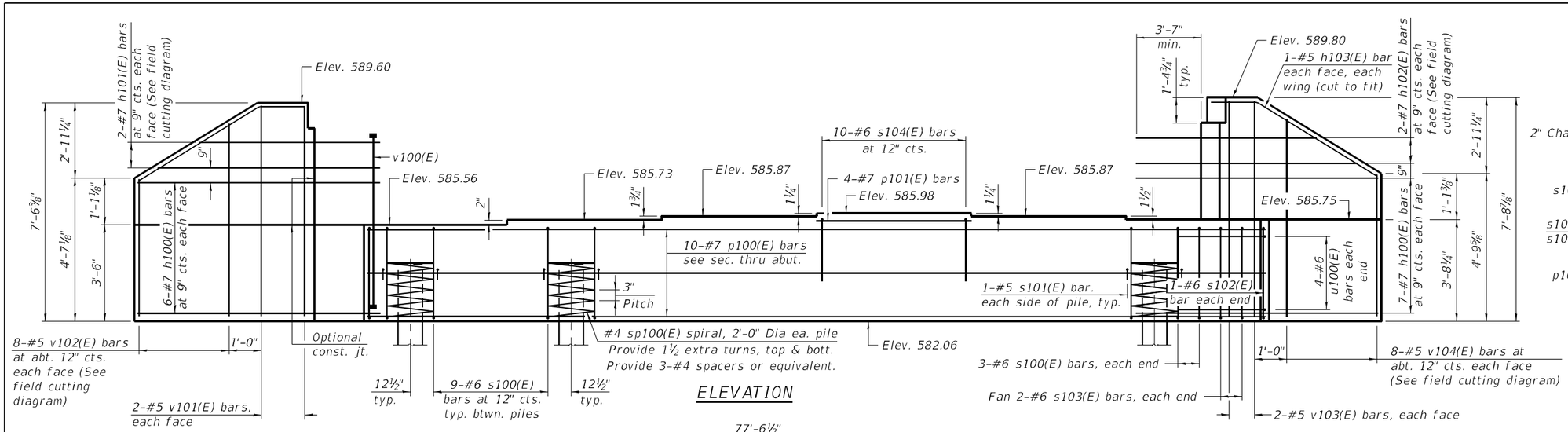

ELEVATION

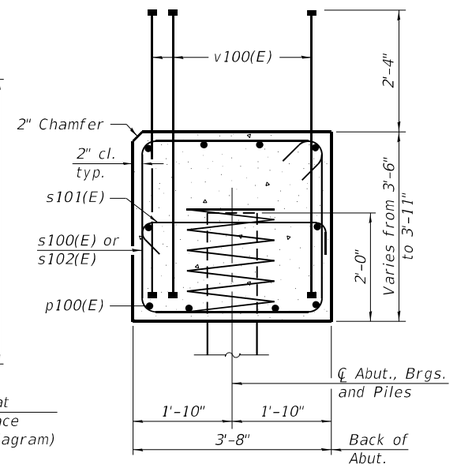

SEC. THRU ABUT.

Dimensions at Rt. angles to abutment.

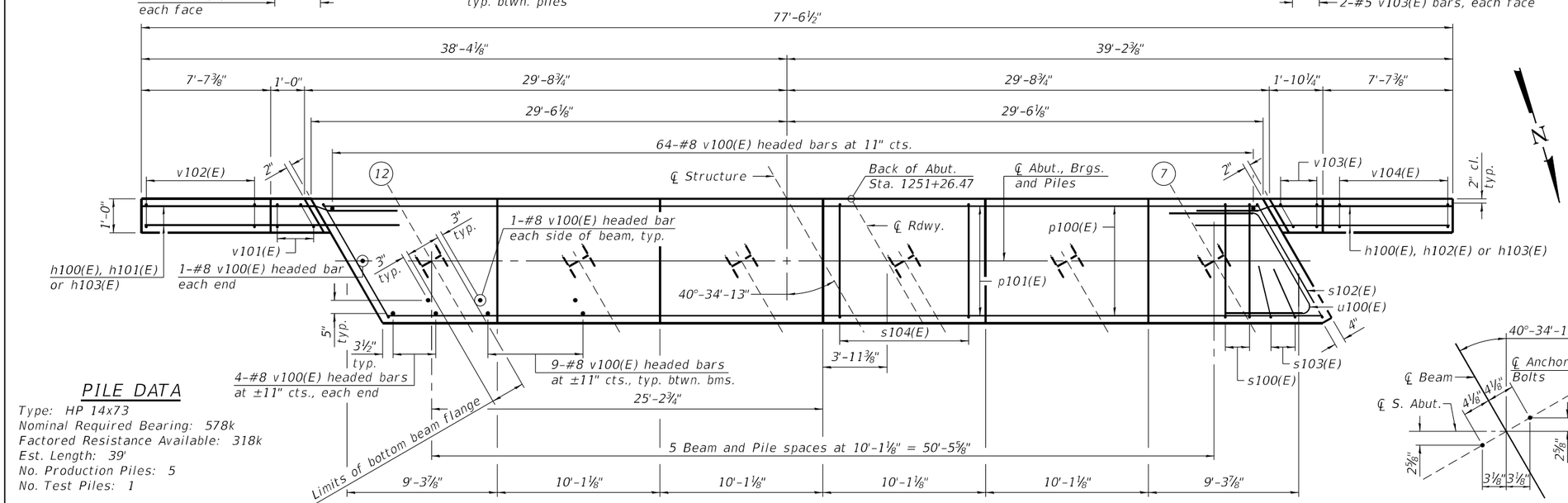

PLAN

PILE DATA

Type: HP 14x73
Nominal Required Bearing: 578k
Factored Resistance Available: 318k
Est. Length: 39'
No. Production Piles: 5
No. Test Piles: 1

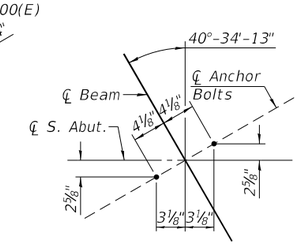

ANCHOR BOLT LAYOUT

BILL OF MATERIAL

Bar	No.	Size	Length	Shape
h100(E)	26	#7	13'-0"	
h101(E)	2	#7	23'-2"	
h102(E)	2	#7	20'-4"	
h103(E)	4	#5	9'-6"	
p100(E)	10	#7	58'-7"	
p101(E)	4	#7	9'-9"	
s100(E)	51	#6	14'-4"	
s101(E)	12	#5	4'-4"	
s102(E)	2	#6	16'-6"	
s103(E)	4	#6	6'-6"	
s104(E)	10	#6	7'-4"	
* sp100(E)	6	#4	2'-0"	
u100(E)	8	#6	12'-10"	
v100(E)	131	#8	5'-6"	
v101(E)	4	#5	7'-2"	
v102(E)	8	#5	11'-2"	
v103(E)	4	#5	7'-4"	
v104(E)	8	#5	11'-7"	
Structure Excavation			Cu. Yd.	228
Concrete Structures			Cu. Yd.	34.4
Reinforcement Bars, Epoxy Coated			Pound	5,900
Furnishing - Piles, HP 14x73			Foot	195
Driving Piles			Foot	195
Test Pile, HP 14x73			Each	1

*Length is height of spiral.

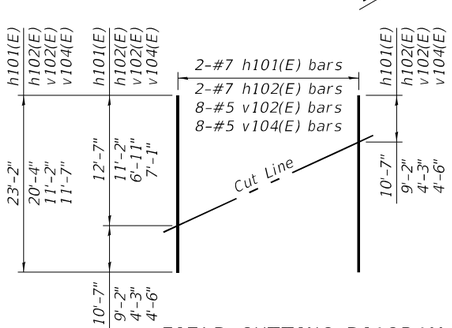

FIELD CUTTING DIAGRAM

Order h101(E), h102(E), v102(E) and v104(E) full length. Cut as shown and use remainder of bars in opposite wing.

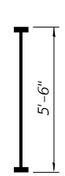

BAR v100(E)

(Headed)

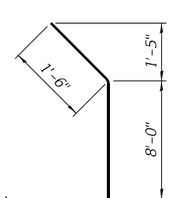

BAR h103(E)

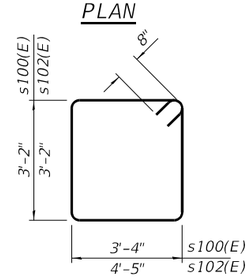

BAR s100(E) & s102(E)

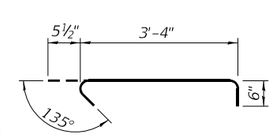

BAR s101(E)

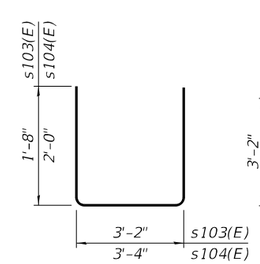

BAR s103(E) & s104(E)

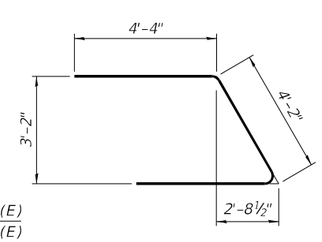

BAR u100(E)

Notes:
Pour steps monolithically with cap.
Headed bars shall conform to ASTM A970 with threaded attachment; Class HA; and reinforcement bars conforming to ASTM A706. Cost included with Reinforcement Bars, Epoxy Coated.
For details of piles see sheet 32 of 38.

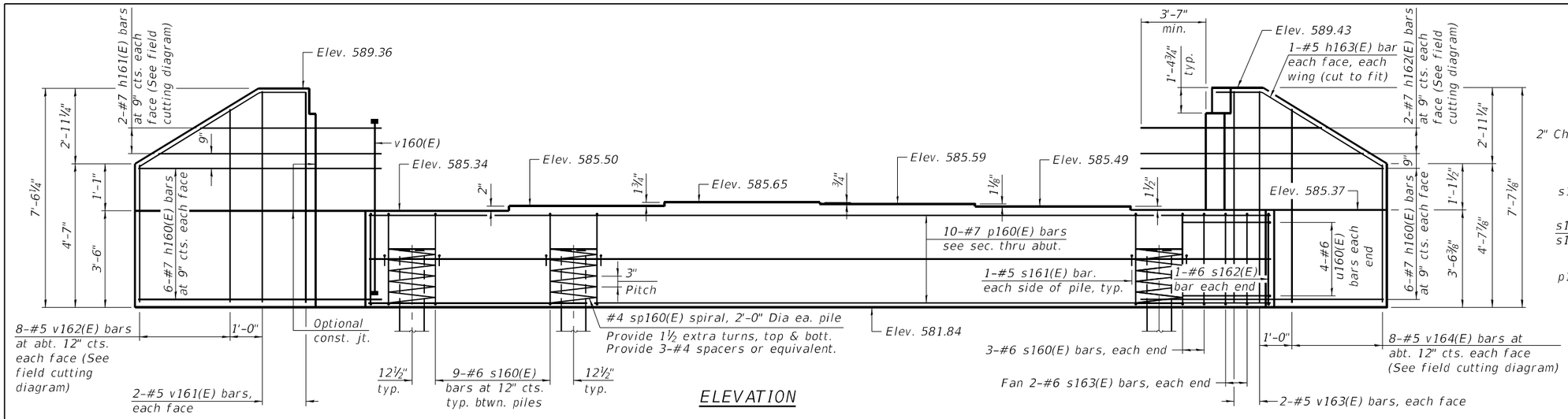

ELEVATION

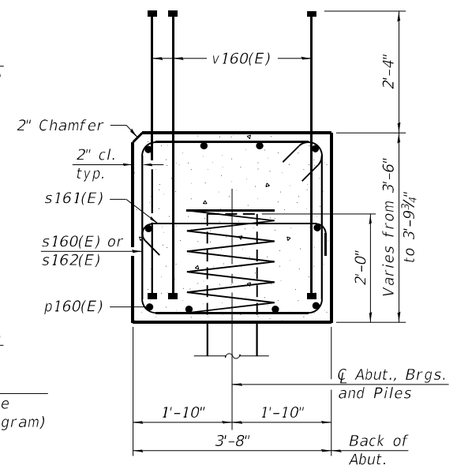

SEC. THRU ABUT.

Dimensions at Rt. angles to abutment.

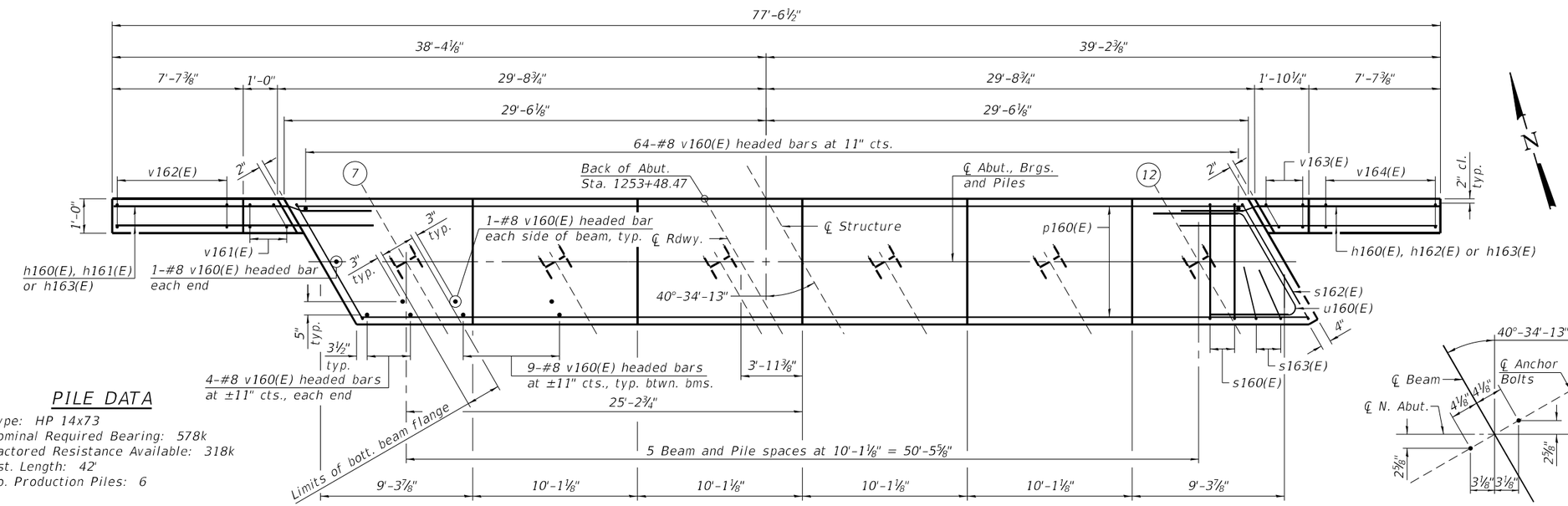

PLAN

PILE DATA

Type: HP 14x73
Nominal Required Bearing: 578k
Factored Resistance Available: 318k
Est. Length: 42'
No. Production Piles: 6

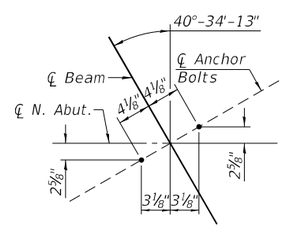

ANCHOR BOLT LAYOUT

BILL OF MATERIAL

Bar	No.	Size	Length	Shape
h160(E)	24	#7	13'-0"	
h161(E)	2	#7	23'-1"	
h162(E)	2	#7	23'-5"	
h163(E)	4	#5	9'-6"	
p160(E)	10	#7	58'-7"	
s160(E)	51	#6	14'-4"	
s161(E)	12	#5	4'-4"	
s162(E)	2	#6	16'-6"	
s163(E)	4	#6	6'-6"	
* sp160(E)	6	#4	2'-0"	
u160(E)	8	#6	12'-10"	
v160(E)	131	#8	5'-6"	
v161(E)	4	#5	7'-2"	
v162(E)	8	#5	11'-1"	
v163(E)	4	#5	7'-3"	
v164(E)	8	#5	11'-3"	
Structure Excavation		Cu. Yd.	223	
Concrete Structures		Cu. Yd.	33.6	
Reinforcement Bars, Epoxy Coated		Pound	5,650	
Furnishing - Piles, HP 14x73		Foot	252	
Driving Piles		Foot	252	

*Length is height of spiral.

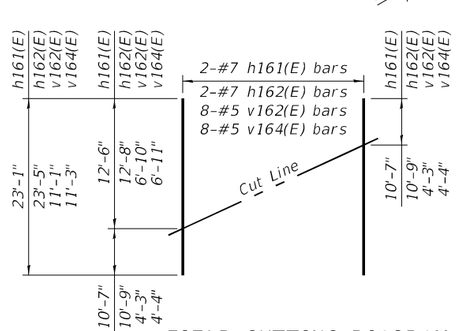

FIELD CUTTING DIAGRAM

Order h161(E), h162(E), v162(E) and v164(E) full length. Cut as shown and use remainder of bars in opposite wing.

BAR v160(E)

(Headed)

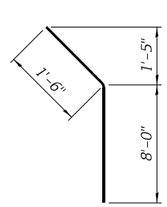

BAR h163(E)

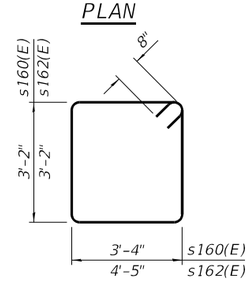

BAR s160(E) & s162(E)

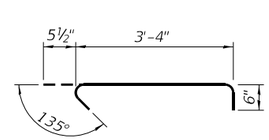

BAR s161(E)

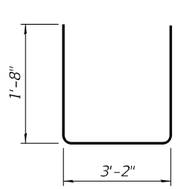

BAR s163(E)

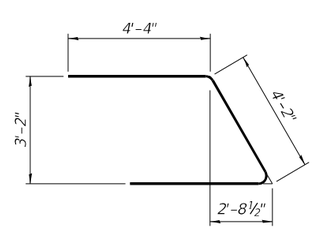

BAR u160(E)

Notes:
Pour steps monolithically with cap.
Headed bars shall conform to ASTM A970 with threaded attachment; Class HA; and reinforcement bars conforming to ASTM A706. Cost included with Reinforcement Bars, Epoxy Coated.
For details of piles see sheet 32 of 38.

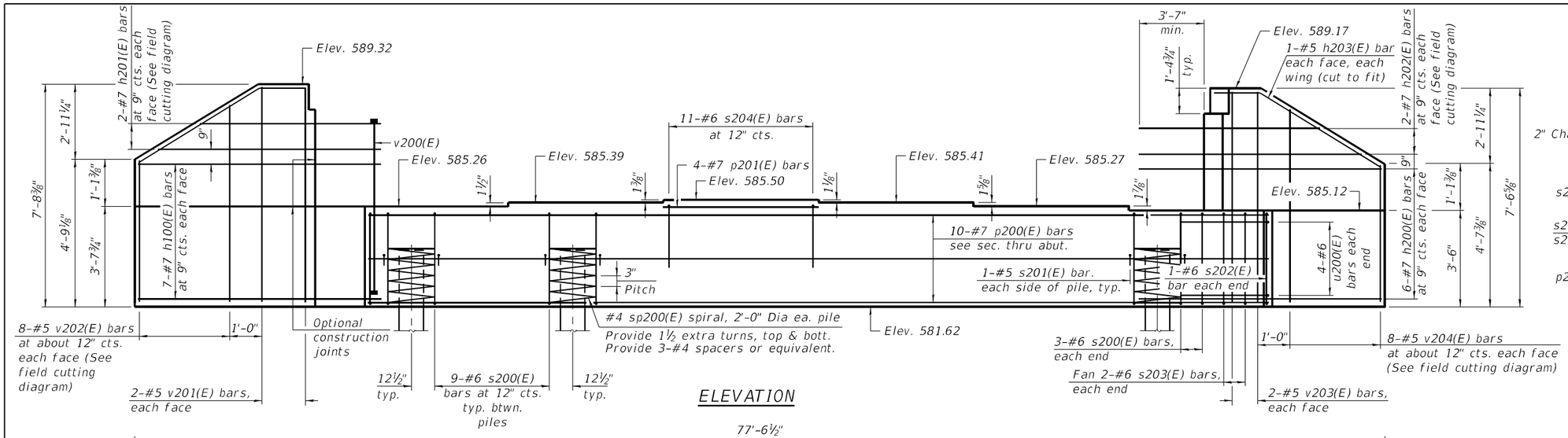

ELEVATION

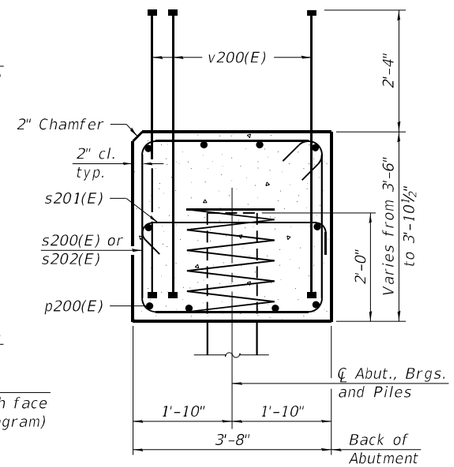

SEC. THRU ABUT.

Dimensions at right angles to abutment.

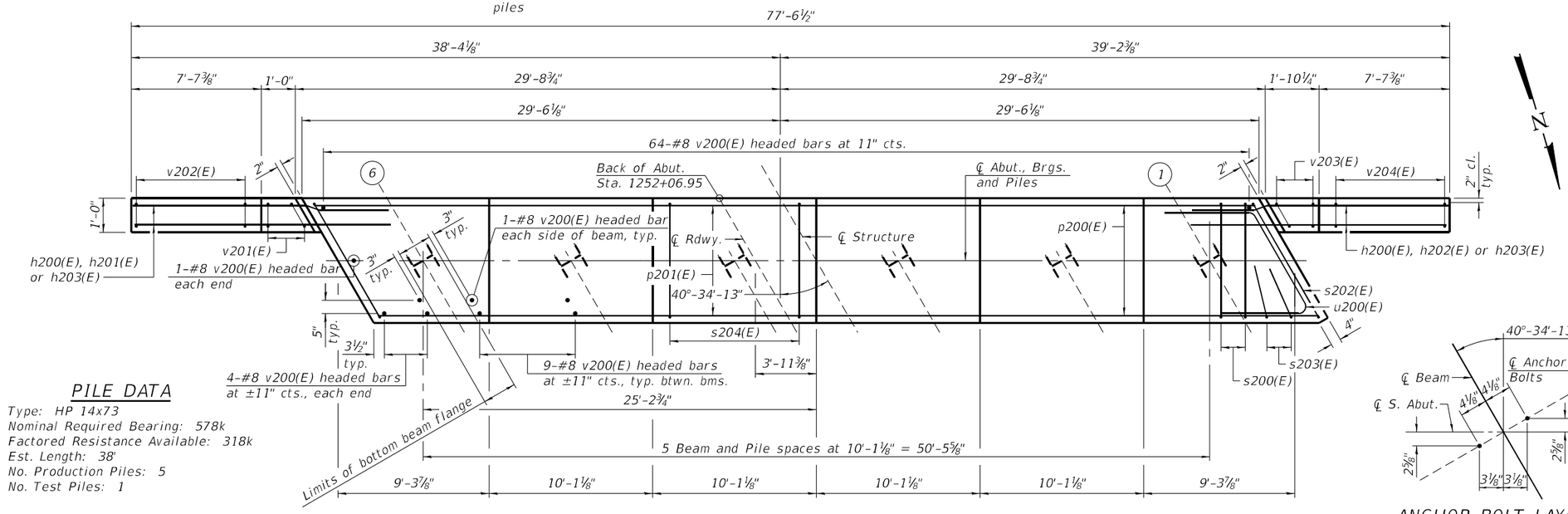

PLAN

PILE DATA

Type: HP 14x73
Nominal Required Bearing: 578k
Factored Resistance Available: 318k
Est. Length: 38'
No. Production Piles: 5
No. Test Piles: 1

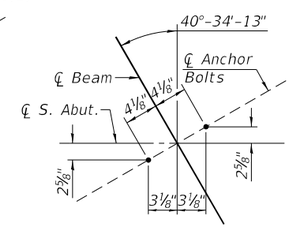

ANCHOR BOLT LAYOUT

BILL OF MATERIAL

Bar	No.	Size	Length	Shape
h200(E)	26	#7	13'-0"	
h201(E)	2	#7	20'-1"	
h202(E)	2	#7	23'-3"	
h203(E)	4	#5	9'-6"	
p200(E)	10	#7	58'-7"	
p201(E)	4	#7	9'-9"	
s200(E)	51	#6	14'-4"	
s201(E)	12	#5	4'-4"	
s202(E)	2	#6	16'-6"	
s203(E)	4	#6	6'-6"	
s204(E)	10	#6	7'-4"	
* sp200(E)	6	#4	2'-0"	
u200(E)	8	#6	12'-10"	
v200(E)	131	#8	5'-6"	
v201(E)	4	#5	7'-4"	
v202(E)	8	#5	11'-6"	
v203(E)	4	#5	7'-2"	
v204(E)	8	#5	11'-3"	
Structure Excavation			Cu. Yd.	224
Concrete Structures			Cu. Yd.	34.1
Reinforcement Bars, Epoxy Coated			Pound	5,890
Furnishing - Piles, HP 14x73			Foot	190
Driving Piles			Foot	190
Test Pile, HP 14x73			Each	1

*Length is height of spiral.

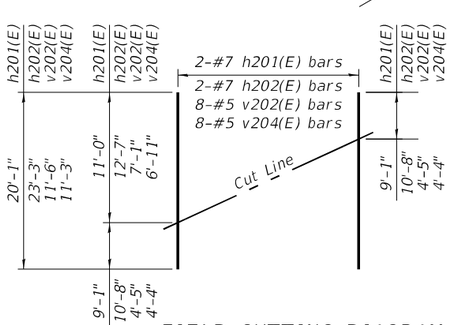

FIELD CUTTING DIAGRAM

Order h201(E), h202(E), v202(E) and v204(E) full length. Cut as shown and use remainder of bars in opposite wing.

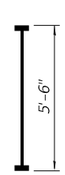

BAR v200(E)

(Headed)

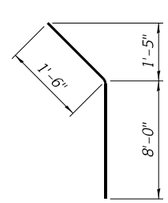

BAR h203(E)

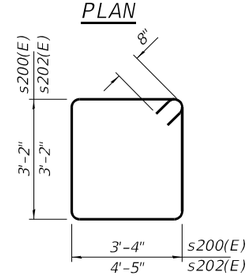

BAR s200(E) & s202(E)

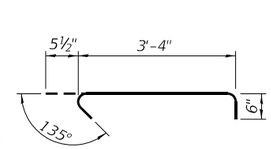

BAR s201(E)

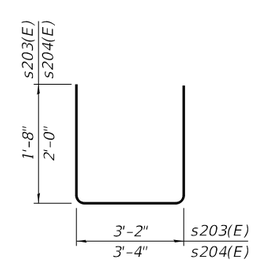

BAR s203(E) & s204(E)

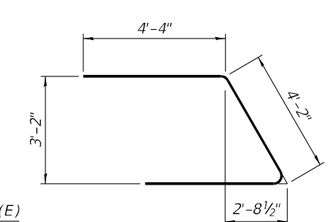

BAR u200(E)

Notes:
Pour steps monolithically with cap.
Headed bars shall conform to ASTM A970 with threaded attachment; Class HA; and reinforcement bars conforming to ASTM A706. Cost included with Reinforcement Bars, Epoxy Coated.
For details of piles see sheet 32 of 38.

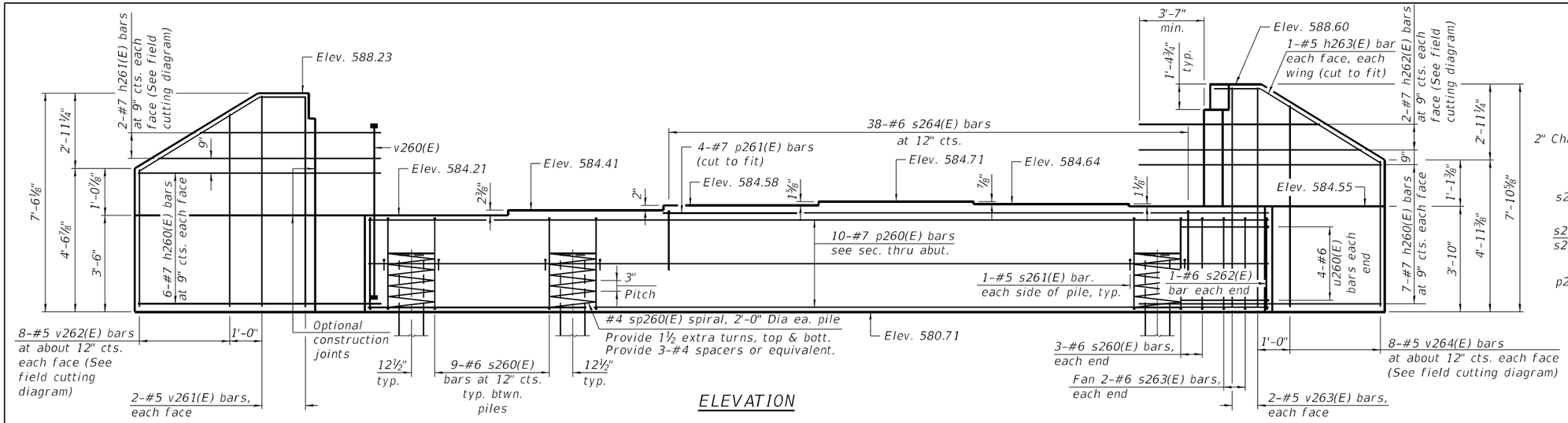

ELEVATION

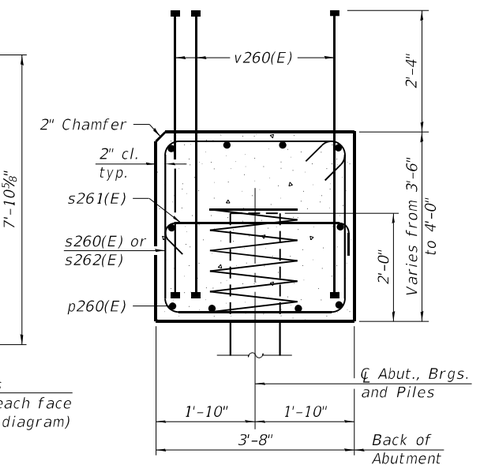

SEC. THRU ABUT.

Dimensions at right angles to abutment.

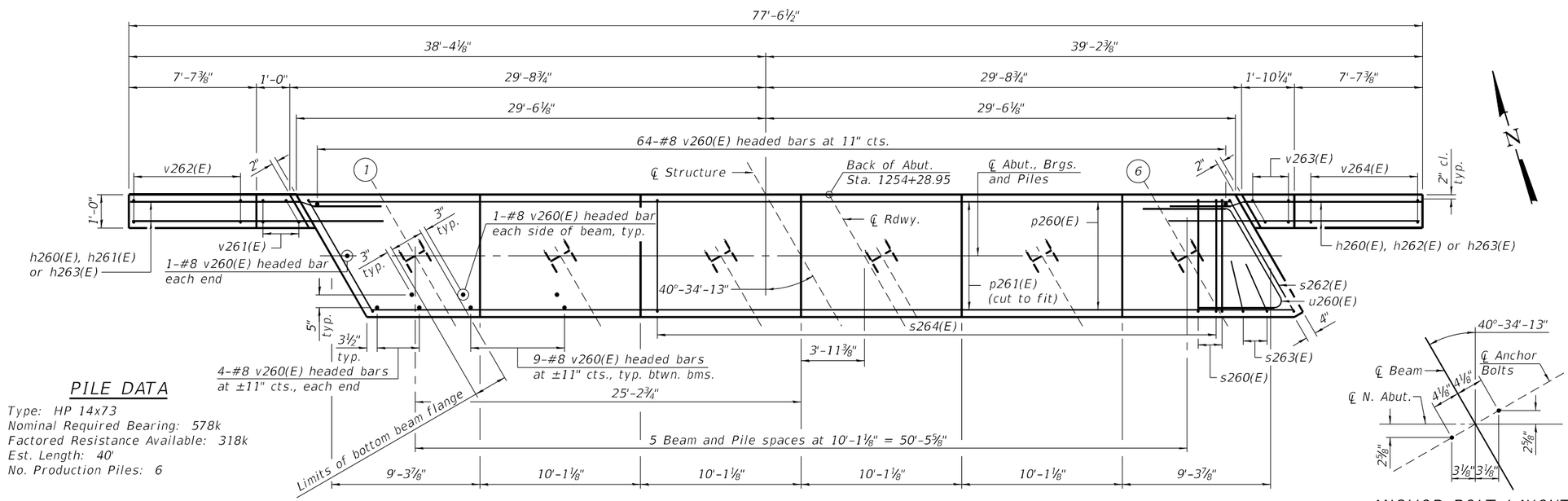

PLAN

PILE DATA

Type: HP 14x73
Nominal Required Bearing: 578k
Factored Resistance Available: 318k
Est. Length: 40'
No. Production Piles: 6

ANCHOR BOLT LAYOUT

BILL OF MATERIAL

Bar	No.	Size	Length	Shape
h260(E)	26	#7	13'-0"	
h261(E)	2	#7	23'-1"	
h262(E)	2	#7	21'-1"	
h263(E)	4	#5	9'-6"	
p260(E)	10	#7	58'-7"	
p261(E)	4	#7	40'-6"	
s260(E)	51	#6	14'-4"	
s261(E)	12	#5	4'-4"	
s262(E)	2	#6	16'-6"	
s263(E)	4	#6	6'-6"	
s264(E)	38	#6	7'-4"	
* sp260(E)	6	#4	2'-0"	
u260(E)	8	#6	12'-10"	
v260(E)	131	#8	5'-6"	
v261(E)	4	#5	7'-2"	
v262(E)	8	#5	11'-1"	
v263(E)	4	#5	7'-6"	
v264(E)	8	#5	11'-11"	
Structure Excavation			Cu. Yd.	228
Concrete Structures			Cu. Yd.	35.0
Reinforcement Bars, Epoxy Coated			Pound	6,460
Furnishing - Piles, HP 14x73			Foot	240
Driving Piles			Foot	240

*Length is height of spiral.

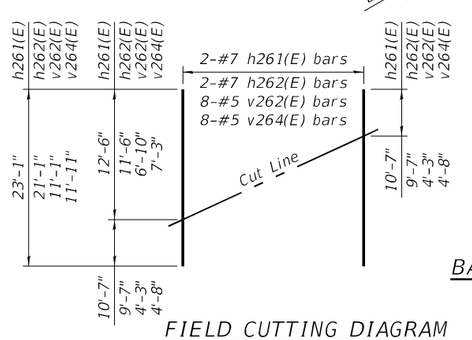

FIELD CUTTING DIAGRAM

Order h261(E), h262(E), v262(E) and v264(E) full length. Cut as shown and use remainder of bars in opposite wing.

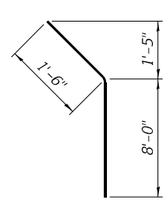

BAR v260(E)

(Headed)

BAR h263(E)

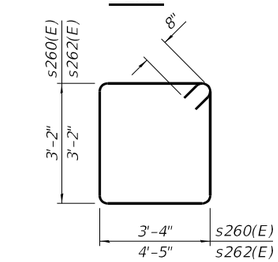

BAR s260(E) & s262(E)

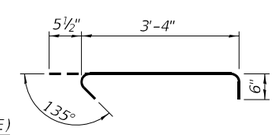

BAR s261(E)

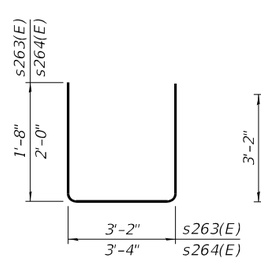

BAR s263(E) & s264(E)

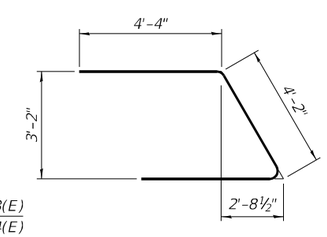

BAR u260(E)

Notes:
Pour steps monolithically with cap.
Headed bars shall conform to ASTM A970 with threaded attachment; Class HA; and reinforcement bars conforming to ASTM A706. Cost included with Reinforcement Bars, Epoxy Coated.
For details of piles see sheet 32 of 38.

MODEL: Default
FILE NAME: L:\DOT\1906810\WO_#\Dwg\Structures\SN 17-18\027-North Abutment Details 041-0118 (SB).dgn

CMT
License No. 184-000613
© Copyright CMT, Inc.

USER NAME = Albert Reinwart	DESIGNED - JMW	REVISED -	
	CHECKED - FAS	REVISED -	
PLOT SCALE = N/A	DRAWN - GLD	REVISED -	
PLOT DATE = 4/30/2021 (12:00:37 PM)	CHECKED - AFR	REVISED -	

STATE OF ILLINOIS
DEPARTMENT OF TRANSPORTATION

NORTH ABUTMENT DETAILS
STRUCTURE NO. 041-0118 (SB)

SHEET 27 OF 38 SHEETS

F.A.I. RTE.	SECTION	COUNTY	TOTAL SHEETS	SHEET NO.
57	(41-4)B-1	JEFFERSON	257	166
		CONTRACT NO. 78550		
		ILLINOIS FED. AID PROJECT		

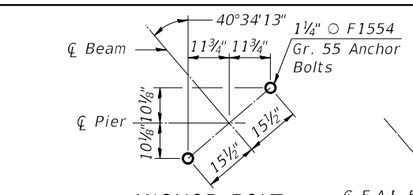

ANCHOR BOLT INSTALLATION DETAIL

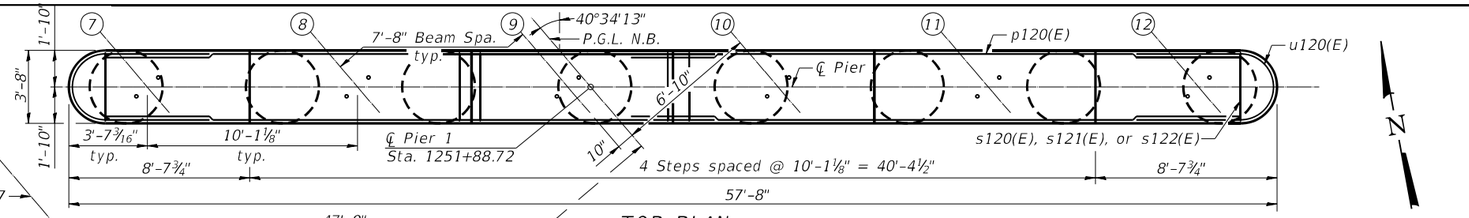

TOP PLAN

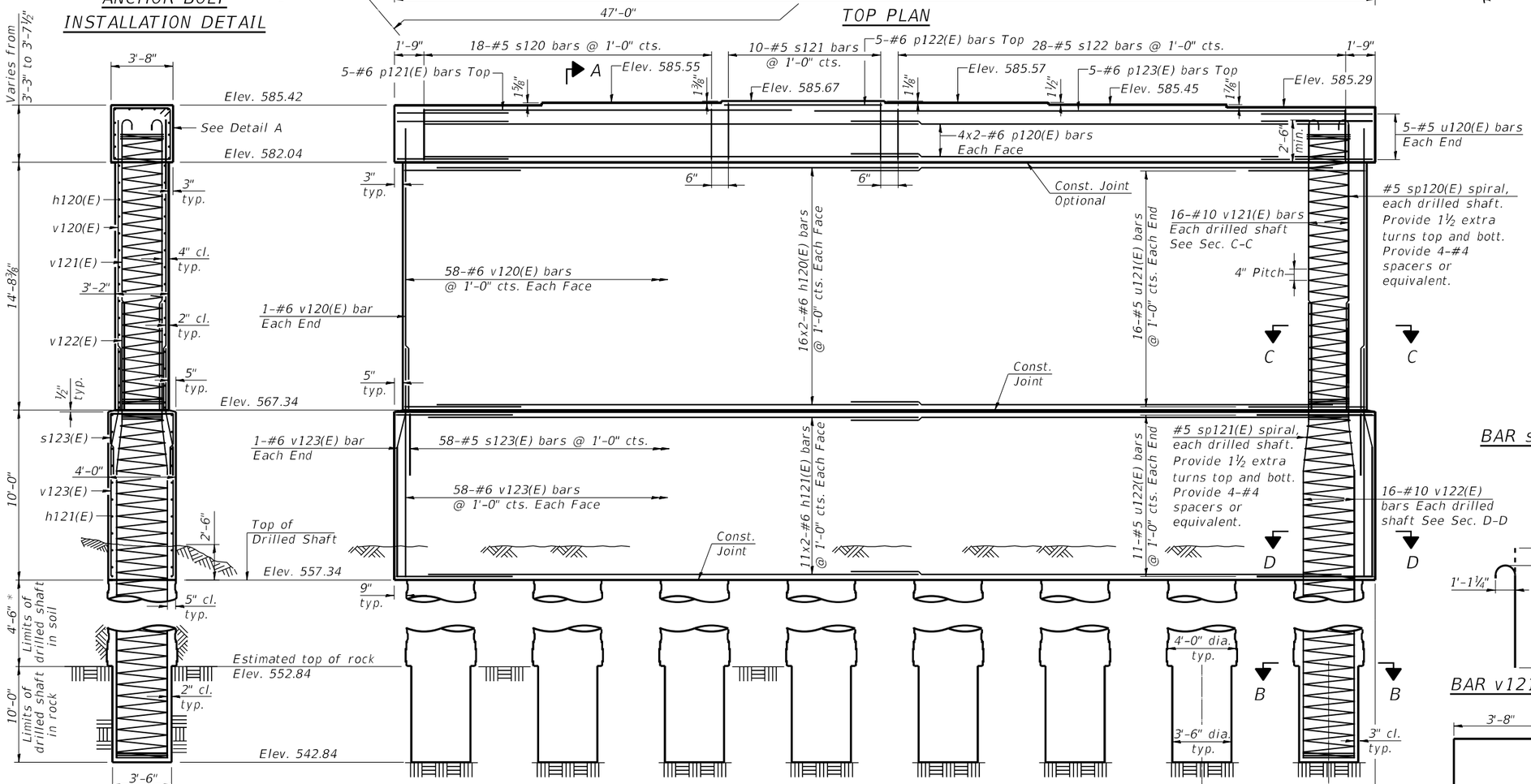

ELEVATION
(Looking North)

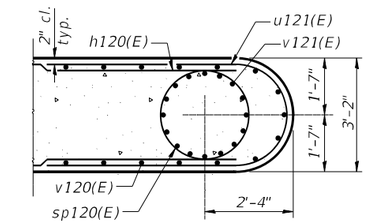

SECTION C-C

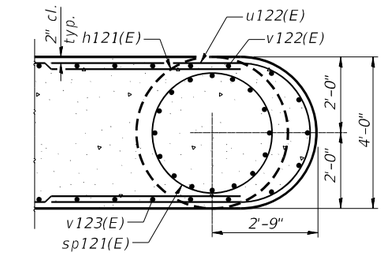

SECTION D-D

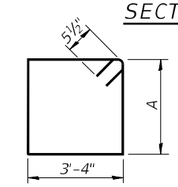

Bar	A
s120(E)	3'-0"
s121(E)	3'-3"
s122(E)	2'-11"

BAR s120(E), s121(E), & s122(E)

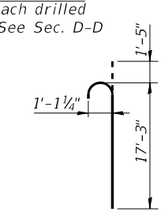

BAR v121(E)

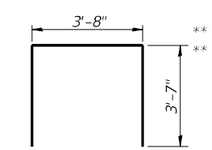

BAR s123(E)

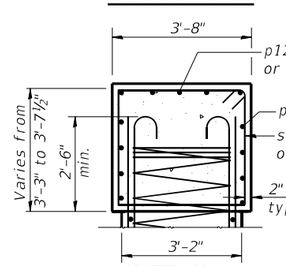

DETAIL A

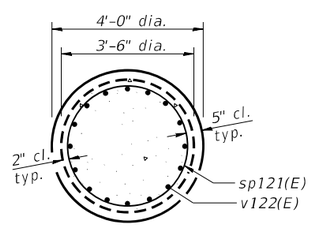

SECTION B-B

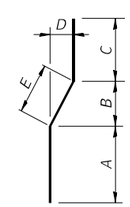

Bar	A	B	C	D	E
v122(E)	19'-9"	4'-0"	7'-3"	4"	4'-0"
v123(E)	6'-8"	3'-1¼"	4'-6"	5"	3'-1¼"

BAR v122(E) & v123(E)

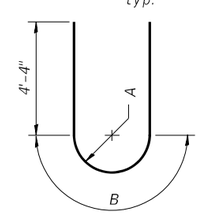

Bar	A	B
u120(E)	1'-8"	5'-3"
u121(E)	1'-5"	4'-6"
u122(E)	1'-10"	5'-9"

BAR u120(E), u121(E), or u122(E)

* The quantities and reinforcement detailing are based on top of shaft and the estimated top of rock elevations and may change based on the actual top of rock elevation encountered at each shaft.

Cast steps monolithically with cap.
Space cap reinforcement to miss anchor bolts.
** Length is total height of spiral.

BILL OF MATERIAL

Bar	No.	Size	Length	Shape
h120(E)	64	#6	30'-7"	
h121(E)	44	#6	31'-0"	
p120(E)	16	#6	29'-3"	
p121(E)	5	#6	21'-1"	
p122(E)	5	#6	9'-9"	
p123(E)	5	#6	31'-3"	
s120(E)	18	#5	13'-7"	
s121(E)	10	#5	14'-1"	
s122(E)	28	#5	13'-5"	
s123(E)	58	#5	10'-10"	
sp120(E)	8	#5	16'-6"	
sp121(E)	8	#5	24'-2"	
u120(E)	10	#5	13'-11"	
u121(E)	32	#5	13'-2"	
u122(E)	22	#5	14'-5"	
v120(E)	118	#6	17'-3"	
v121(E)	128	#10	18'-8"	
v122(E)	128	#10	31'-0"	
v123(E)	118	#6	14'-4"	
Structure Excavation			Cu. Yd.	89
Concrete Structures			Cu. Yd.	208.8
Reinforcement Bars, Epoxy Coated			Pound	50,750
Drilled Shaft in Soil			Cu. Yd.	16.8
Drilled Shaft in Rock			Cu. Yd.	28.5

Min. Bar Lap
#6(E) Bar = 4'-4"
#10(E) Bar = 6'-9"

MODEL: Default
FILE NAME: L:\BOT\195861\01\WD_B\Drawr\Structures\SN 17-18\028-Pier 1 Details (NB) 041-0117.dgn

CMT
License No. 184-000613

USER NAME = Albert Reinwart	DESIGNED - AI	REVISED -	
	CHECKED - FAS	REVISED -	
PLOT SCALE = N/A	DRAWN - DAC	REVISED -	
PLOT DATE = 4/30/2021 (12:00:42 PM)	CHECKED - DRC	REVISED -	

STATE OF ILLINOIS
DEPARTMENT OF TRANSPORTATION

PIER 1 DETAILS
STRUCTURE NO. 041-0117 (NB)

SHEET 28 OF 38 SHEETS

F.A.I. RTE.	SECTION	COUNTY	TOTAL SHEETS	SHEET NO.
57	(41-4)B-1	JEFFERSON	257	167
		CONTRACT NO. 78550		
		ILLINOIS FED. AID PROJECT		

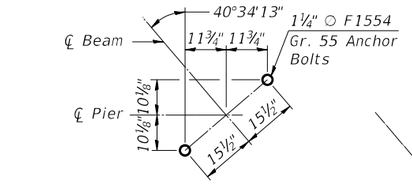

ANCHOR BOLT INSTALLATION DETAIL

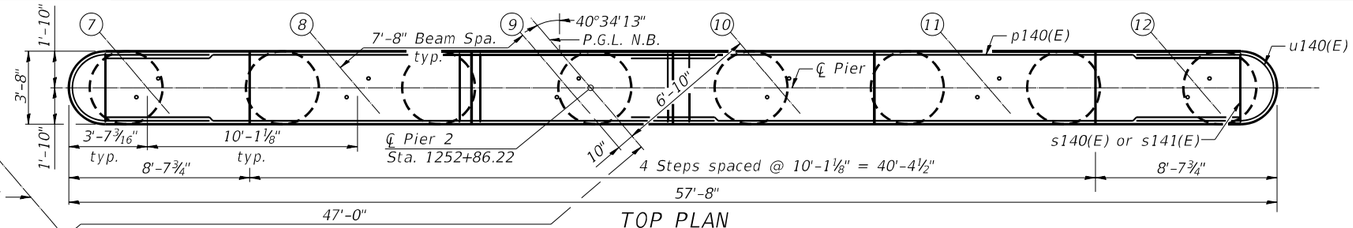

TOP PLAN

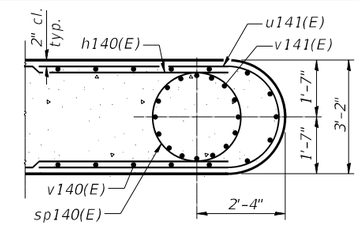

SECTION C-C

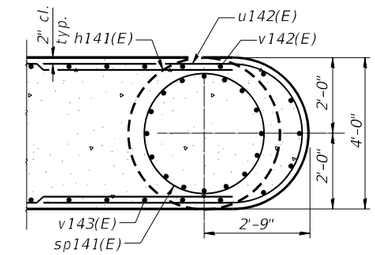

SECTION D-D

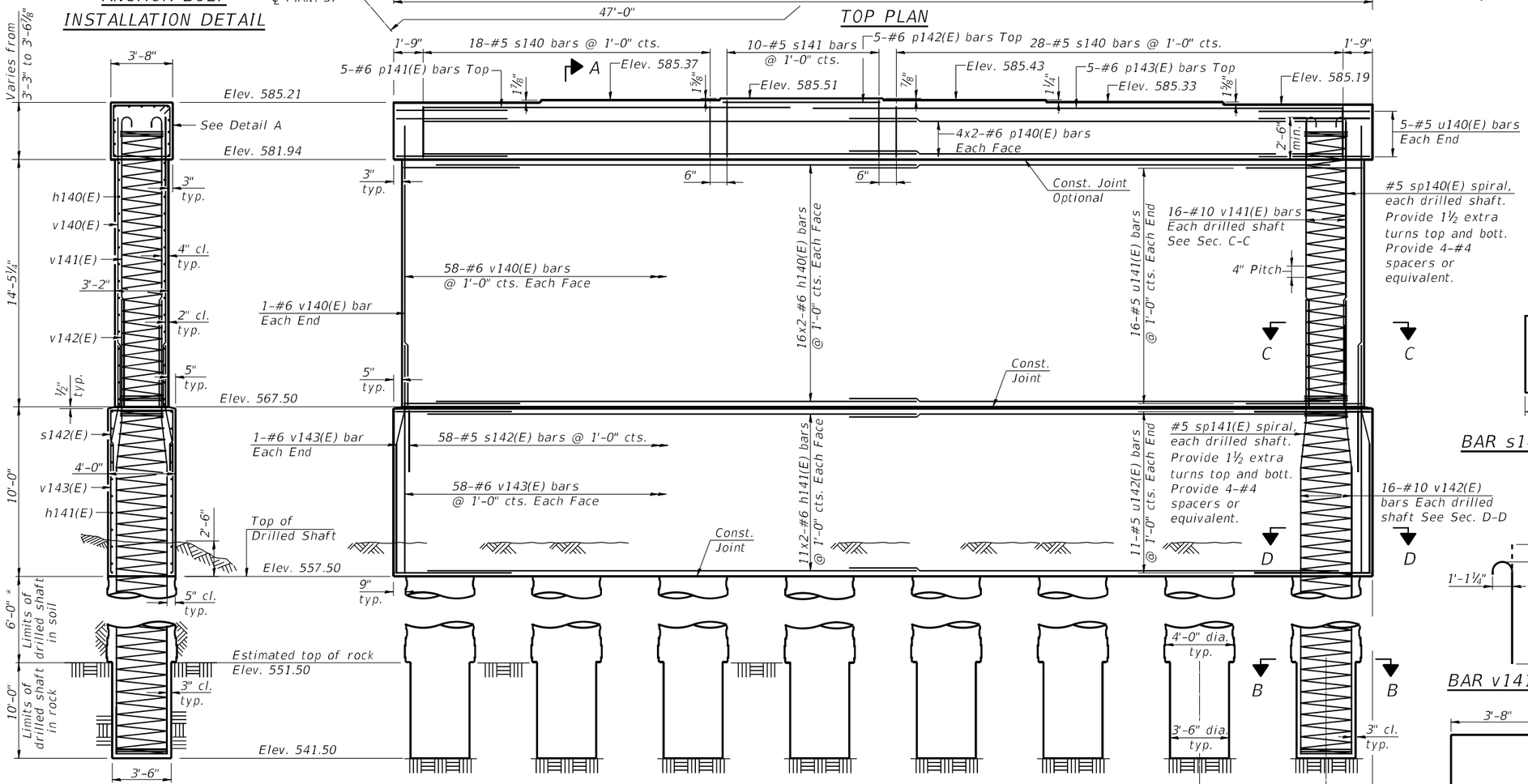

SECTION A-A

ELEVATION
(Looking North)

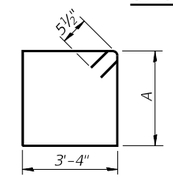

Bar	A
s140(E)	2'-11"
s141(E)	3'-3"

BAR s140(E) & s141(E)

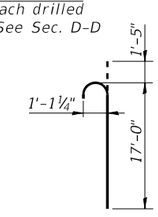

BAR v141(E)

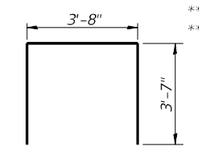

BAR s142(E)

BILL OF MATERIAL

Bar	No.	Size	Length	Shape
h140(E)	64	#6	30'-7"	
h141(E)	44	#6	31'-0"	
p140(E)	16	#6	29'-0"	
p141(E)	5	#6	21'-1"	
p142(E)	5	#6	9'-9"	
p143(E)	5	#6	31'-3"	
s140(E)	46	#5	13'-5"	
s141(E)	10	#5	14'-1"	
s142(E)	58	#5	10'-10"	
** sp140(E)	8	#5	16'-3"	
** sp141(E)	8	#5	25'-8"	
u140(E)	10	#5	13'-11"	
u141(E)	32	#5	13'-2"	
u142(E)	22	#5	14'-5"	
v140(E)	118	#6	17'-0"	
v141(E)	128	#10	18'-5"	
v142(E)	128	#10	32'-7"	
v143(E)	118	#6	14'-4"	
Structure Excavation		Cu. Yd.	89	
Concrete Structures		Cu. Yd.	206.7	
Reinforcement Bars, Epoxy Coated		Pound	51,760	
Drilled Shaft in Soil		Cu. Yd.	22.3	
Drilled Shaft in Rock		Cu. Yd.	28.5	

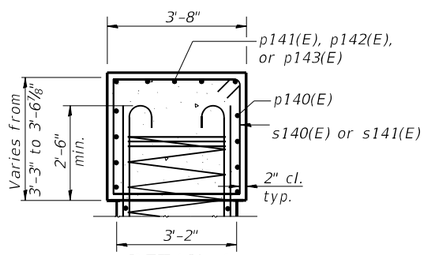

DETAIL A

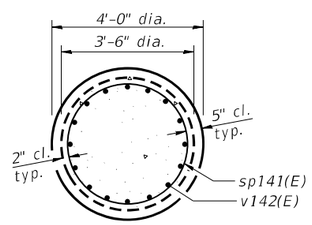

SECTION B-B

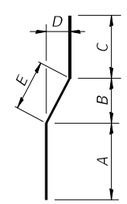

Bar	A	B	C	D	E
v142(E)	21'-3"	4'-0"	7'-3"	4"	4'-0"
v143(E)	6'-8"	3'-1¼"	4'-6"	5"	3'-1¼"

BAR v142(E) & v143(E)

* The quantities and reinforcement detailing are based on top of shaft and the estimated top of rock elevations and may change based on the actual top of rock elevation encountered at each shaft.

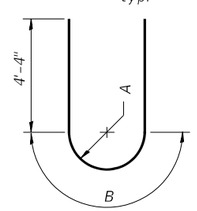

Bar	A	B
u140(E)	1'-8"	5'-3"
u141(E)	1'-5"	4'-6"
u142(E)	1'-10"	5'-9"

BAR u140(E), u141(E), or u142(E)

Cast steps monolithically with cap.
Space cap reinforcement to miss anchor bolts.
** Length is total height of spiral.

Min. Bar Lap
#6(E) Bar = 4'-4"
#10(E) Bar = 6'-9"

MODEL: Default
FILE NAME: L:\DOT\1900610\WO_8\Draw\Structures\SN 17-18\029-Pier 2 Details (NB) (041-0117.dgn

CMT
License No. 184-000813
© Copyright CMT, Inc.

USER NAME = Albert Reinwart	DESIGNED - AI	REVISED -	
	CHECKED - FAS	REVISED -	
PLOT SCALE = N/A	DRAWN - DAC	REVISED -	
PLOT DATE = 4/30/2021 (12:00:45 PM)	CHECKED - DRC	REVISED -	

STATE OF ILLINOIS
DEPARTMENT OF TRANSPORTATION

PIER 2 DETAILS
STRUCTURE NO. 041-0117 (NB)
SHEET 29 OF 38 SHEETS

F.A.I. RTE.	SECTION	COUNTY	TOTAL SHEETS	SHEET NO.
57	(41-4)B-1	JEFFERSON	257	168
		CONTRACT NO. 78550		
		ILLINOIS	FED. AID PROJECT	

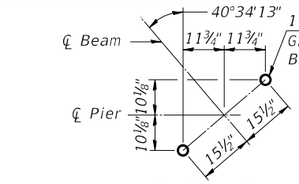

ANCHOR BOLT INSTALLATION DETAIL

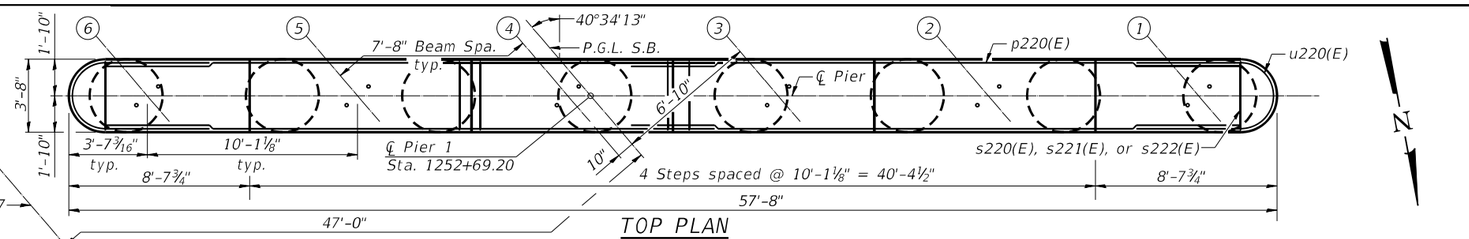

TOP PLAN

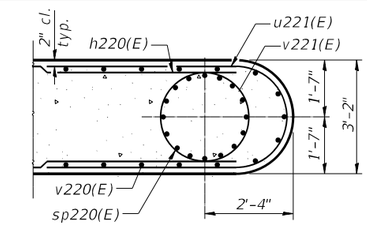

SECTION C-C

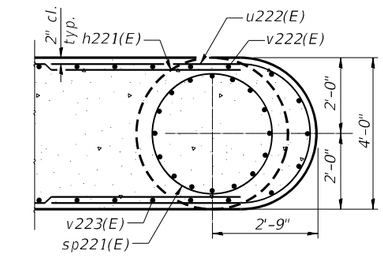

SECTION D-D

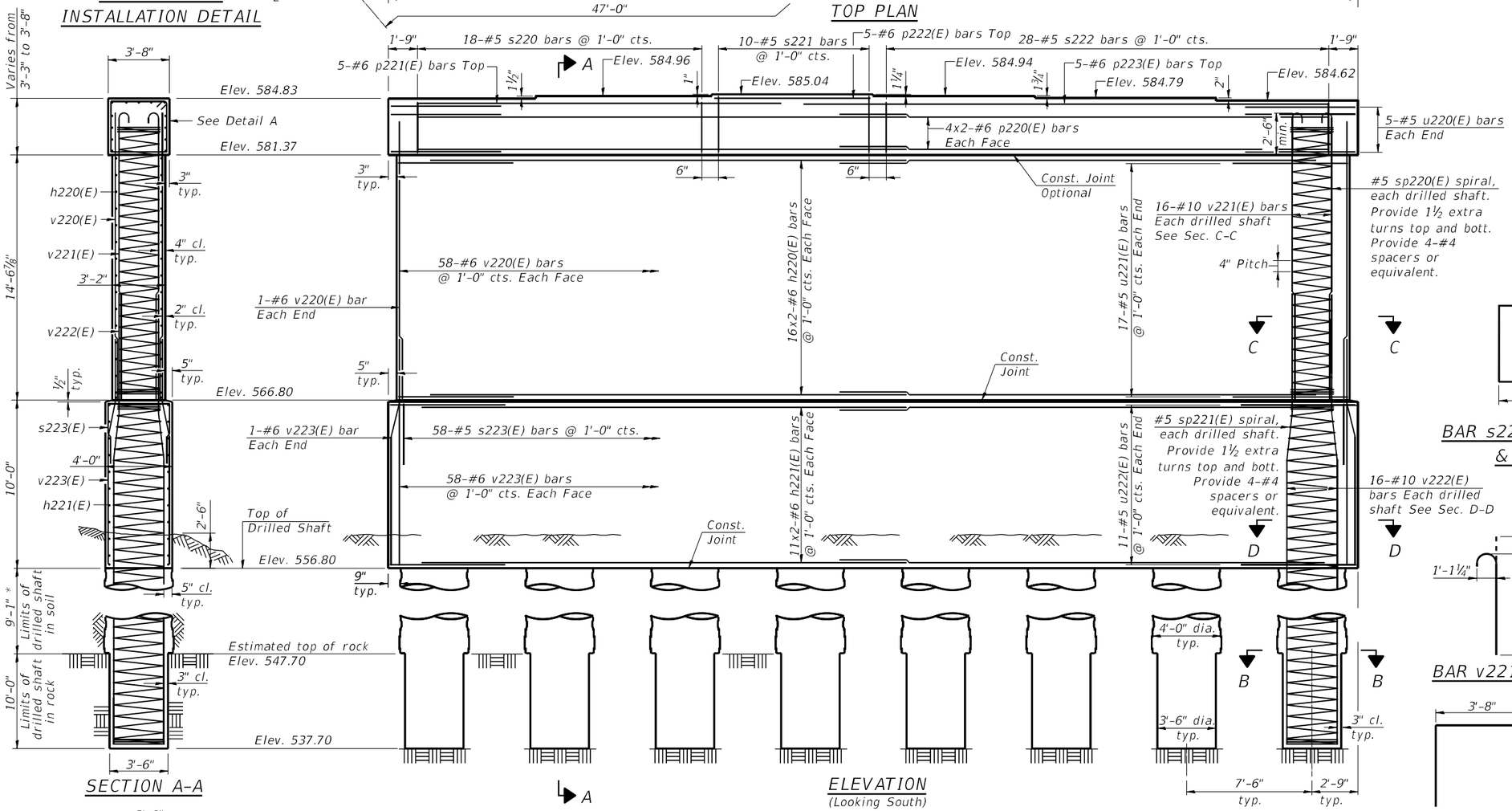

SECTION A-A

ELEVATION
(Looking South)

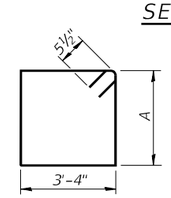

Bar	A
s220(E)	3'-1"
s221(E)	3'-4"
s222(E)	2'-11"

BAR s220(E), s221(E), & s222(E)

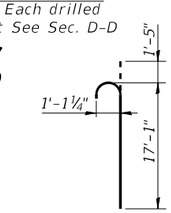

BAR v221(E)

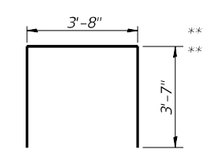

BAR s223(E)

BILL OF MATERIAL

Bar	No.	Size	Length	Shape
h220(E)	64	#6	30'-7"	
h221(E)	44	#6	31'-0"	
p220(E)	16	#6	29'-0"	
p221(E)	5	#6	21'-1"	
p222(E)	5	#6	9'-9"	
p223(E)	5	#6	31'-3"	
s220(E)	18	#5	13'-9"	
s221(E)	10	#5	14'-3"	
s222(E)	28	#5	13'-5"	
s223(E)	58	#5	10'-10"	
sp220(E)	8	#5	16'-4"	
sp221(E)	8	#5	28'-9"	
u220(E)	10	#5	13'-11"	
u221(E)	34	#5	13'-2"	
u222(E)	22	#5	14'-5"	
v220(E)	118	#6	17'-1"	
v221(E)	128	#10	18'-6"	
v222(E)	128	#10	35'-7"	
v223(E)	118	#6	14'-4"	
Structure Excavation			Cu. Yd.	89
Concrete Structures			Cu. Yd.	208.2
Reinforcement Bars, Epoxy Coated			Pound	54,290
Drilled Shaft in Soil			Cu. Yd.	33.8
Drilled Shaft in Rock			Cu. Yd.	28.5

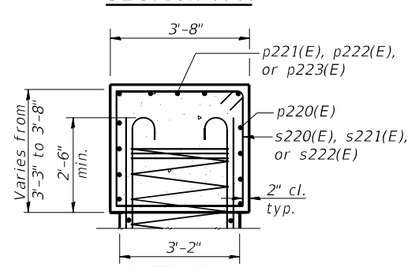

DETAIL A

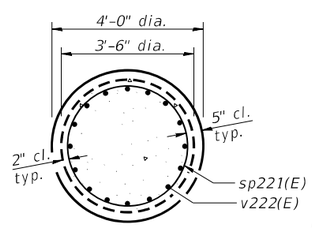

SECTION B-B

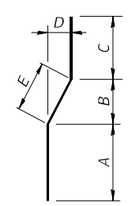

Bar	A	B	C	D	E
v222(E)	24'-4"	4'-0"	7'-3"	4"	4'-0"
v223(E)	6'-8"	3'-1¼"	4'-6"	5"	3'-1¼"

BAR v222(E) & v223(E)

* The quantities and reinforcement detailing are based on top of shaft and the estimated top of rock elevations and may change based on the actual top of rock elevation encountered at each shaft.

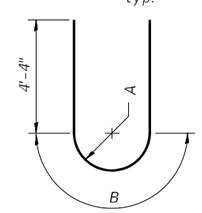

Bar	A	B
u220(E)	1'-8"	5'-3"
u221(E)	1'-5"	4'-6"
u222(E)	1'-10"	5'-9"

BAR u220(E), u221(E), or u222(E)

Cast steps monolithically with cap.
Space cap reinforcement to miss anchor bolts.
** Length is total height of spiral.

Min. Bar Lap
#6(E) Bar = 4'-4"
#10(E) Bar = 6'-9"

CMT
License No. 184-000813 © Copyright CMT, Inc.

USER NAME = Albert Reinwart	DESIGNED - AI	REVISED -	
	CHECKED - FAS	REVISED -	
PLOT SCALE = N/A	DRAWN - DAC	REVISED -	
PLOT DATE = 4/30/2021 (12:00:52 PM)	CHECKED - DRC	REVISED -	

STATE OF ILLINOIS
DEPARTMENT OF TRANSPORTATION

PIER 1 DETAILS
STRUCTURE NO. 041-0118 (SB)

SHEET 30 OF 38 SHEETS

F.A.I. RTE.	SECTION	COUNTY	TOTAL SHEETS	SHEET NO.
57	(41-4)B-1	JEFFERSON	257	169
		CONTRACT NO. 78550		
		ILLINOIS FED. AID PROJECT		

MODEL: Default
FILE NAME: L:\DOT\1900610\WO_8\Draw\Structures\SN 17-18\030-Pier 1 Details (SB) (041-0118).dgn

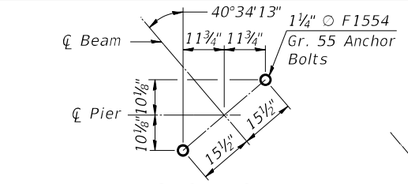

ANCHOR BOLT INSTALLATION DETAIL

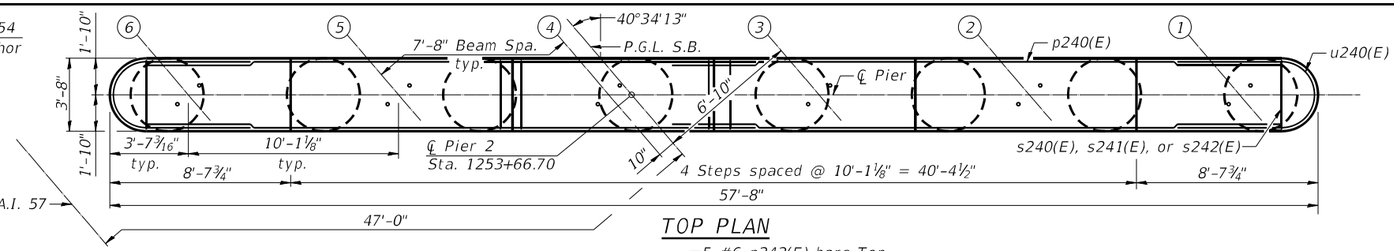

TOP PLAN

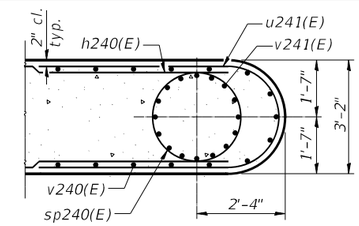

SECTION C-C

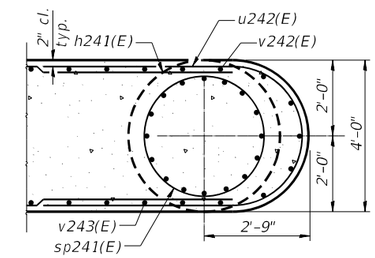

SECTION D-D

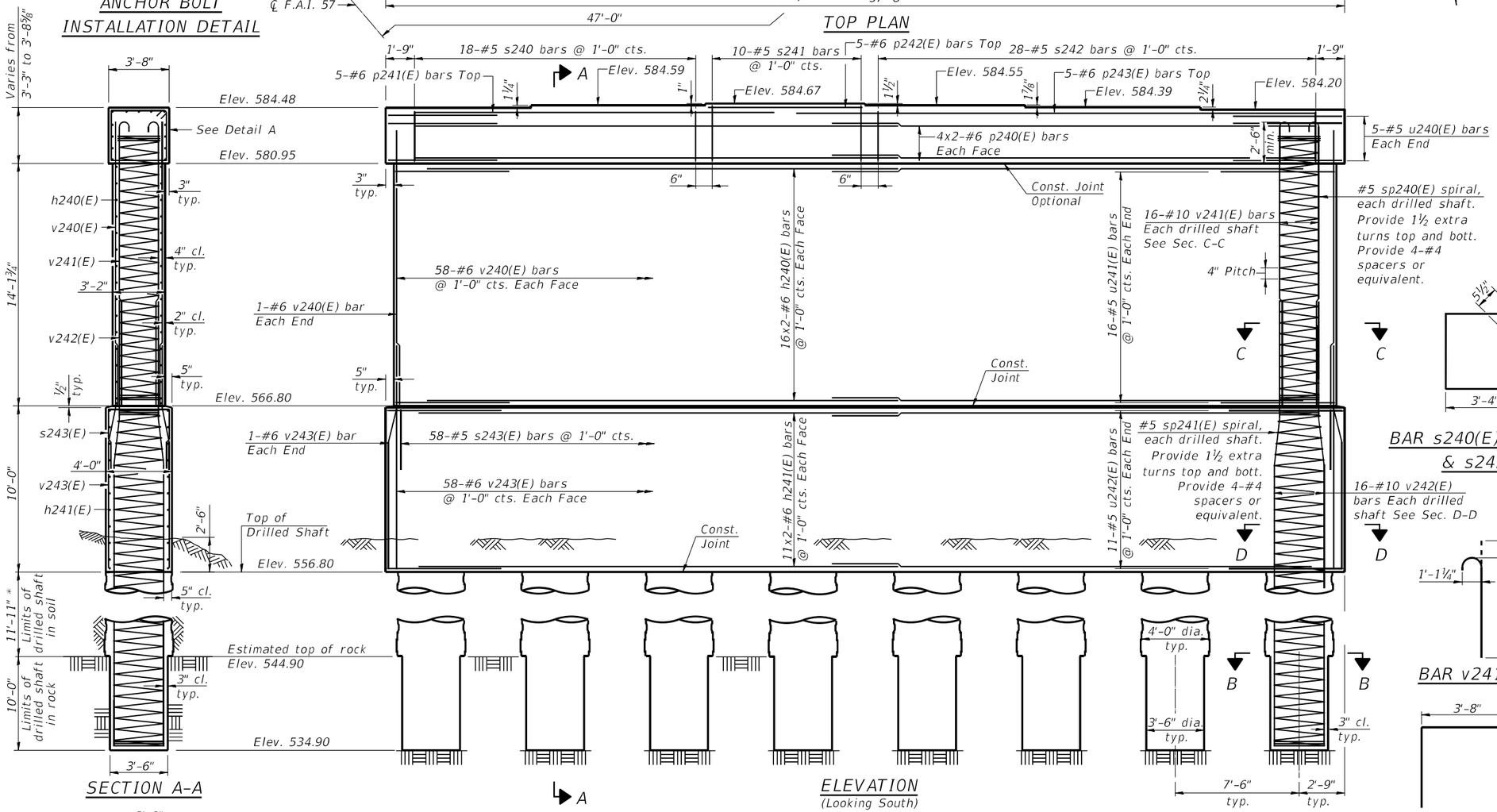

SECTION A-A

ELEVATION
(Looking South)

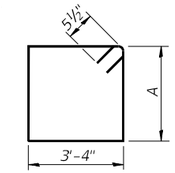

BAR s240(E), s241(E), & s242(E)

Bar	A
s240(E)	3'-2"
s241(E)	3'-4"
s242(E)	2'-11"

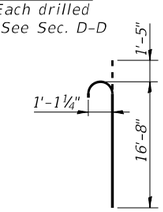

BAR v241(E)

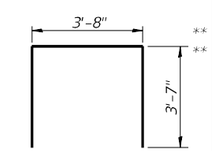

BAR s243(E)

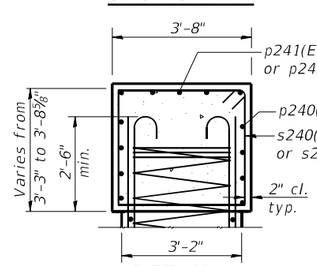

DETAIL A

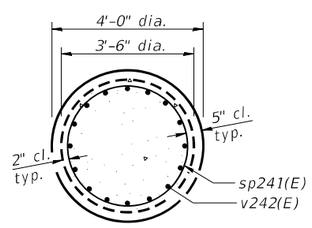

SECTION B-B

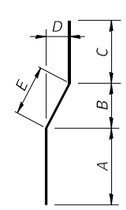

BAR v242(E) & v243(E)

Bar	A	B	C	D	E
v242(E)	27'-2"	4'-0"	7'-3"	4"	4'-0"
v243(E)	6'-8"	3'-1¼"	4'-6"	5"	3'-1¼"

* The quantities and reinforcement detailing are based on top of shaft and the estimated top of rock elevations and may change based on the actual top of rock elevation encountered at each shaft.

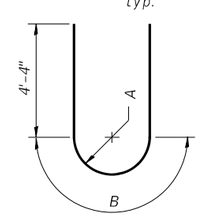

BAR u240(E), u241(E), or u242(E)

Bar	A	B
u240(E)	1'-8"	5'-3"
u241(E)	1'-5"	4'-6"
u242(E)	1'-10"	5'-9"

Cast steps monolithically with cap.
Space cap reinforcement to miss anchor bolts.
** Length is total height of spiral.

BILL OF MATERIAL

Bar	No.	Size	Length	Shape
h240(E)	64	#6	30'-7"	
h241(E)	44	#6	31'-0"	
p240(E)	16	#6	29'-0"	
p241(E)	5	#6	21'-1"	
p242(E)	5	#6	9'-9"	
p243(E)	5	#6	31'-3"	
s240(E)	18	#5	13'-11"	
s241(E)	10	#5	14'-3"	
s242(E)	28	#5	13'-5"	
s243(E)	58	#5	10'-10"	
sp240(E)	8	#5	16'-4"	
sp241(E)	8	#5	31'-10"	
u240(E)	10	#5	13'-11"	
u241(E)	32	#5	13'-2"	
u242(E)	22	#5	14'-5"	
v240(E)	118	#6	16'-8"	
v241(E)	128	#10	18'-1"	
v242(E)	128	#10	38'-5"	
v243(E)	118	#6	14'-4"	
Structure Excavation			Cu. Yd.	89
Concrete Structures			Cu. Yd.	205.7
Reinforcement Bars, Epoxy Coated			Pound	56,160
Drilled Shaft in Soil			Cu. Yd.	44.4
Drilled Shaft in Rock			Cu. Yd.	28.5

Min. Bar Lap
#6(E) Bar = 4'-4"
#10(E) Bar = 6'-9"

MODEL: Default
FILE NAME: L:\BDOT\190861\0\WO_8\Draw\Structures\SN 17-18\031-Pier 2 Details (SB) (041-0118).dgn

CMT
License No. 184-000813 © Copyright CMT, Inc.

USER NAME = Albert Reinwart	DESIGNED - AI	REVISED -	
	CHECKED - FAS	REVISED -	
PLOT SCALE = N/A	DRAWN - DAC	REVISED -	
PLOT DATE = 4/30/2021 (12:00:56 PM)	CHECKED - DRC	REVISED -	

STATE OF ILLINOIS
DEPARTMENT OF TRANSPORTATION

PIER 2 DETAILS
STRUCTURE NO. 041-0118 (SB)

SHEET 31 OF 38 SHEETS

F.A.I. RTE.	SECTION	COUNTY	TOTAL SHEETS	SHEET NO.
57	(41-4)B-1	JEFFERSON	257	170
		CONTRACT NO. 78550		
		ILLINOIS FED. AID PROJECT		

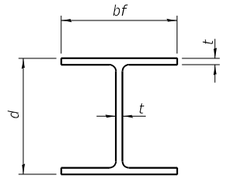

STEEL PILE TABLE

Designation	Depth d	Flange width bf	Web and Flange thickness t	Encasement diameter A
HP 14x117	14¼"	14⅞"	13/16"	30"
x102	14"	14¾"	11/16"	30"
x89	13⅞"	14¾"	⅝"	30"
x73	13⅝"	14⅝"	½"	30"
HP 12x84	12¼"	12¼"	11/16"	24"
x74	12⅛"	12¼"	⅝"	24"
x63	12"	12⅛"	½"	24"
x53	11¾"	12"	7/16"	24"
HP 10x57	10"	10¼"	9/16"	24"
x42	9¾"	10⅛"	7/16"	24"
HP 8x36	8"	8⅛"	7/16"	18"

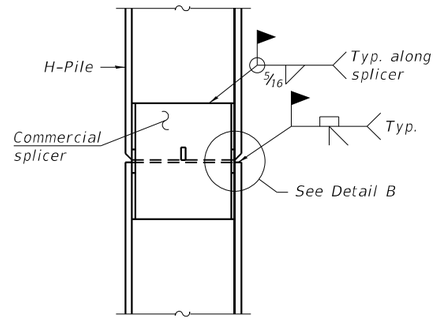

ELEVATION

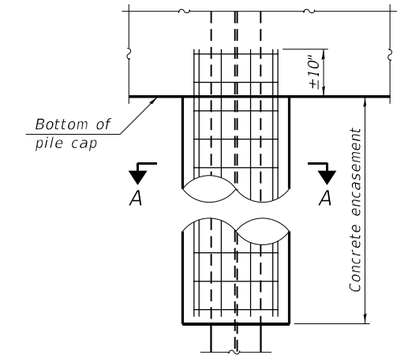

ELEVATION

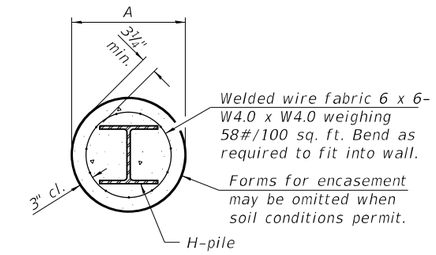

SECTION A-A

INDIVIDUAL PILE CONCRETE ENCASEMENT

(when specified)

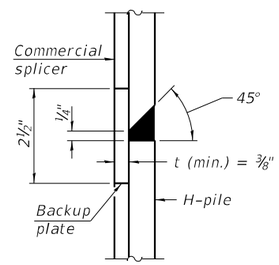

DETAIL "B"

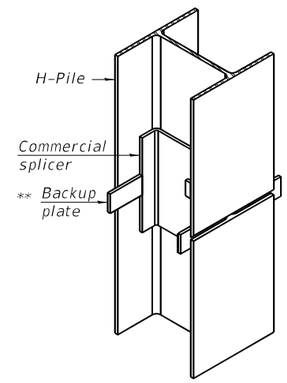

ISOMETRIC VIEW

WELDED COMMERCIAL SPLICE

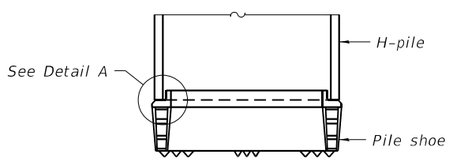

ELEVATION

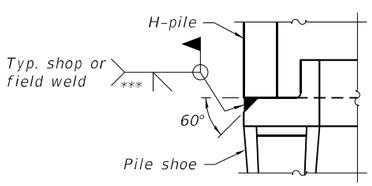

DETAIL A

SHOE ATTACHMENT

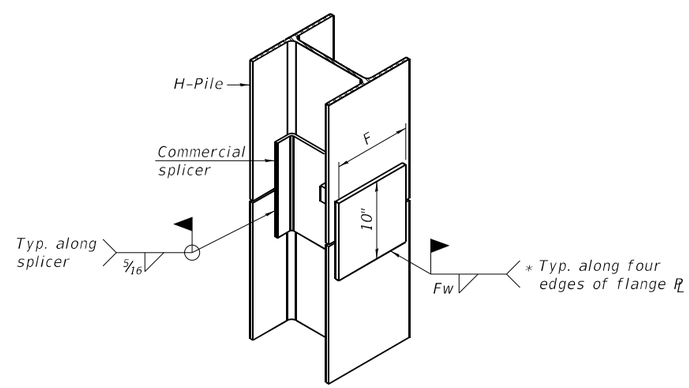

ISOMETRIC VIEW

WELDED COMMERCIAL SPLICE ALTERNATE

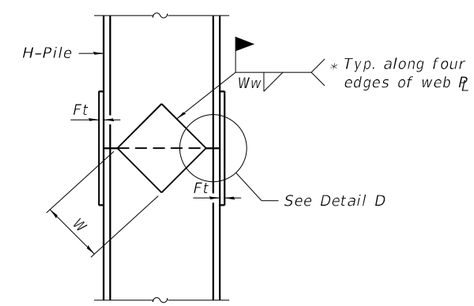

ELEVATION

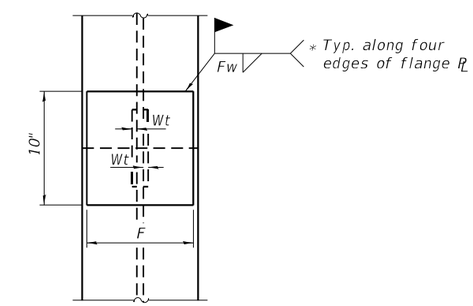

END VIEW

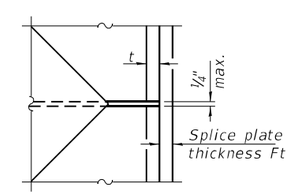

DETAIL D

Designation	F	Ft	Fw	W	Wt	Ww
HP 14x117	12½"	1"	⅞"	7¾"	⅝"	½"
x102	12½"	⅞"	¾"	7¾"	⅝"	½"
x89	12½"	¾"	11/16"	7¾"	⅝"	½"
x73	12½"	⅝"	9/16"	7¾"	⅝"	½"
HP 12x84	10"	⅞"	11/16"	6½"	⅝"	½"
x74	10"	⅞"	11/16"	6½"	⅝"	½"
x63	10"	⅝"	½"	6½"	½"	⅜"
x53	10"	⅝"	½"	6½"	½"	⅜"
HP 10x57	8"	¾"	9/16"	5¼"	½"	⅜"
x42	8"	⅝"	9/16"	5¼"	½"	⅜"
HP 8x36	7"	⅝"	7/16"	4¼"	½"	⅜"

WELDED PLATE FIELD SPLICE

Note:
The steel H-piles shall be according to AASHTO M270 Grade 50.

* Interrupt welds ¼" from end of web and/or each flange.

** Remove portions of backup plates that extend outside the flanges.

*** Weld size per pile shoe manufacturer (5/16" min.).

F-HP 1-1-2020

MODEL: Default
FILE NAME: L:\BDOT\100061\01\WO_8\Draw\Structures\SN 17-18032-Sice\HPiles.dgn

CMT
License No. 184-000613

USER NAME = Albert Reinwart	DESIGNED - JMW	REVISED -	
	CHECKED - FAS	REVISED -	
PLOT SCALE = N/A	DRAWN - GLD	REVISED -	
PLOT DATE = 4/30/2021 (12:00:58 PM)	CHECKED - FAS	REVISED -	

STATE OF ILLINOIS
DEPARTMENT OF TRANSPORTATION

HP PILE DETAILS
STRUCTURE NO. 041-0117 (NB) & 041-0118 (SB)

SHEET 32 OF 38 SHEETS

F.A.I. RTE.	SECTION	COUNTY	TOTAL SHEETS	SHEET NO.
57	(41-4)B-1	JEFFERSON	257	171
		CONTRACT NO. 78550		
		ILLINOIS FED. AID PROJECT		

ILLINOIS DEPARTMENT OF TRANSPORTATION
District Nine Materials

Bridge Foundation
Boring Log

FAI Route 57 Over Southern Railroad

Sheet 1 of 2

Route: FAI 57 Structure Number: 041-0016 (N.B.) and 041-0017 (S.B.) Date: 4/20/2017
Section 41,4VB Bored By: R Moberly
County: Jefferson Location: 0.25 mi North of Dix Interchange Checked By: R Moberly

Boring No 1-S (2017)
Station 1253+97
Offset 8' Rt CL median
Ground Surface 507.4 Ft

Surf Wat Elev:
Ground Water Elevation
when Drilling 554.9
At Completion
At: 557.8 Hrs: 120

	DEPTH	BLOWS	Qu tsf	W%
Very stiff, moist, brown, Clay to Clay Loam A7-6		2 4 5	2.1B	17
582.9				
Stiff, moist, brown and grey, Clay A7-6	5.0	2 4 5	1.6B	17
577.9				
Very stiff, moist, brown and grey, Clay A7-6	10.0	1 3 4	2.1B	18
575.4				
Stiff, moist, brown, Clay A7-6		2 3 4	1.8S	17
572.9				
Stiff, moist, grey, Silty Clay A-6	15.0	2 4 6	1.6S	20
570.4				
Very stiff, moist, brown, Clay A7-6		2 3 6	2.1B	18
	20.0	2 4 6	2.3B	19
565.4				
Very stiff, moist, brown mottled grey, Clay A7-6		2 4 6	3.1B	23
562.9				
	25.0	3		
Stiff, moist, brown mottled grey, Silty Clay A-6		5 6	1.3S	18
560.4				
Stiff, moist, brown mottled grey, Clay A7-6		2 4 5	1.4B	19
557.9				
Very stiff, moist, brown mottled grey, Clay A7-6	30.0	1 4 5	2.5B	21
555.4				
Very stiff, moist, brown and grey, Clay to Clay Loam A-6 with a 6" layer of Sand		15 15 10	2.1S	17
552.9				
Very stiff, damp, grey, Clay Loam A-4 with some broken Sandstone gravel	35.0	2 18 24		14
550.4				
Very dense, dry, brown, weathered Sandstone with Clay layers		6 38 24		
547.9				
Very stiff, damp, brown, weathered Clay Shale with some Sandstone	40.0	16 12 13	3.1B	13
543.9				
Hard, dry, grey, Clay Shale				
	45.0	100/5"		
	50.0	100/2"		

N-Std Pentr Test: 2" OD Sampler,140# Hammer, 30" Fall (Type Fail. B-Bulge S-Shear E-Estimated P-Penetrometer)

Sheet 2 of 2

Route: FAI 57
Section: 41,4VB
County: Jefferson
Date: 4/20/2017

Boring No: 1-S (2017)
Station: 1253+97
Offset: 8' Rt CL median
Ground Surface: 507.4 Ft

	DEPTH	BLOWS	Qu tsf	W%
Hard, dry, grey, Clay Shale				
532.4	55.0	100/2"		
Bottom of hole = 54.7 feet				
Free water observed at 32.5 feet				
Elevation referenced to BM at NE wingwall SN 041-0016; Elevation = 590.9 feet	60.0			
Borehole advanced with hollow stem auger (8" O.D, 3.25" I.D.)				
To convert "N" values to "N60" multiply by 1.25				
	65.0			
	70.0			
	75.0			
	80.0			
	85.0			
	90.0			
	95.0			
	100.0			

N-Std Pentr Test: 2" OD Sampler,140# Hammer, 30" Fall (Type Fail. B-Bulge S-Shear E-Estimated P-Penetrometer)

MODEL: Default
FILE NAME: L:\IDOT\1906810\WO_02\Dwg\Structures\SN 17-18\033-Boring Log 1.dgn

CMT
License No. 184-000613

USER NAME = Albert Reinwart	DESIGNED -	REVISED -	
	CHECKED -	REVISED -	
PLOT SCALE = N/A	DRAWN - GLD	REVISED -	
PLOT DATE = 4/30/2021 (12:01:04 PM)	CHECKED - FAS	REVISED -	

STATE OF ILLINOIS
DEPARTMENT OF TRANSPORTATION

BORING LOG 1
STRUCTURE NO. 041-0117 (NB) & 041-0118 (SB)
SHEET 33 OF 38 SHEETS

F.A.I. RTE.	SECTION	COUNTY	TOTAL SHEETS	SHEET NO.
57	(41-4)B-1	JEFFERSON	257	172
		CONTRACT NO. 78550		
		ILLINOIS FED. AID PROJECT		

ILLINOIS DEPARTMENT OF TRANSPORTATION
District Nine Materials

Bridge Foundation
Boring Log

FAI Route 57 Over Southern Railroad

Sheet 1 of 1

Route: FAI 57 Structure Number: 041-0016 (N.B.) and 041-0017 (S.B.) Date: 4/25/2017

Section 41,4VB Bored By: R Moberly

County: Jefferson Location: 0.25 mi North of Dix Interchange Checked By: R Moberly

Boring No 2-S (2017)
Station 1251+69
Offset 8' Lt CL median
Ground Surface 588.5 Ft

Surf Wat Elev:
Ground Water Elevation
when Drilling 545.5
At Completion
At: Hrs:

Description	DEPTH	BLOWS	Qu tsf	W%
Very stiff, moist, brown, Silty Clay A-6				
		2		
		4	2.1B	22
		5		
	584.0			
Stiff, moist, grey and brown, Clay to Silty Clay A7-6	5.0	1		
		4	1.4B	18
		4		
	581.5			
Very stiff, moist, grey and brown, Clay A7-6		2		
		3	2.3B	18
		4		
	579.0			
Stiff, moist, grey and brown, Clay to Silty Clay A7-6	10.0	2		
		3	1.5B	18
		4		
		2		
		3	1.6B	20
		4		
	15.0	1		
		3	1.3B	18
		4		
		1		
		3	1.6B	21
		4		
	20.0	1		
		4	1.8S	18
		5		
	566.5			
Very stiff, moist, brown mottled grey, Clay A7-6		2		
		4	2.3B	19
		6		
	563.5	25.0	2	

Description	DEPTH	BLOWS	Qu tsf	W%
Very stiff, moist, grey, Silty Clay Loam A-6		5	2.3S	19
		8		
	561.5			
Very stiff, moist, brown mottled grey, Clay to Silty Clay A7-6		2		
		5	3.3S	21
		8		
	559.0			
Stiff, moist, brown mottled grey, Clay to Silty Clay A7-6	30.0	1		
		3	1.3B	19
		4		
	556.5			
Very stiff, moist, brown mottled grey, Clay A7-6		1		
		4	2.9B	21
		6		
	554.0			
Stiff, damp, brown streaked grey, Silty Clay A-6	35.0	2		
	553.0	9	1.8S	21
		20		
Hard, dry, brown and grey, weathered Clay Shale				
		15		
		33		
		65		
++++++++++++++++++++++++++ Borehole advanced with hollow stem auger (8" O.D, 3.25" I.D.)				
	40.0	13		
To convert "N" values to "N60" multiply by 1.25		27		
		70		
++++++++++++++++++++++++++				
	546.0	17		
Hard, dry, grey, Clay Shale		!00/7"		
	45.0	19		
	543.0	100/6"		
Bottom of hole = 45.5 feet				
Free water observed at 43.0 feet				
Elevation referenced to BM at NE wingwall SN 041-0016; Elevation = 590.9 feet				
	50.0			

N-Std Pentr Test: 2" OD Sampler,140# Hammer, 30" Fall (Type Fail. B-Bulge S-Shear E-Estimated P-Penetrometer)

MODEL: Default
FILE NAME: L:\BOT\1996810\WO_8\Draw\Structures\SN 17-18\0344-Boring Log 2.dgn

CMT
License No. 184-000613
© Copyright CMT, Inc.

USER NAME = Albert Reinwart	DESIGNED -	REVISED -	
	CHECKED -	REVISED -	
PLOT SCALE = N/A	DRAWN - GLD	REVISED -	
PLOT DATE = 4/30/2021 (12:01:31 PM)	CHECKED - FAS	REVISED -	

STATE OF ILLINOIS
DEPARTMENT OF TRANSPORTATION

BORING LOG 2
STRUCTURE NO. 041–0117 (NB) & 041–0118 (SB)

SHEET 34 OF 38 SHEETS

F.A.I. RTE.	SECTION	COUNTY	TOTAL SHEETS	SHEET NO.
57	(41-4)B-1	JEFFERSON	257	173
		CONTRACT NO. 78550		
	ILLINOIS	FED. AID PROJECT		

FORM No. B.D. 137 Rev. 9-60 Sh. 1 of 8 Sh.

BRIDGE FOUNDATION BORING LOG

PROJECT
ROUTE FAI-57
SEC. 41-4VB
COUNTY Jefferson
Boring No. 1
Station 1252+03
Offset [illegible] Lt. ℄

BRIDGE FAI-57 over Southern Railroad
STA. 1252+68.49

Date 9-20-63
Bored By R.C. Dietzen
Checked By G.M. Broom

Surface Water El. —
Groundwater El. at Completion None
After 24 Hours 553.4

Description	Elevation	N	Qu t/s.f.	w (%)
Ground Surface 565.3	0			
Hard, light brown, SILTY CLAY		20		12
561.3				
Stiff, brown mottled grey, CLAY LOAM	-5	18	S 1.8	18
		13	S 1.7	20
3" or 4" SILT seam at elev. 553.3 carried some free water.	-10	11	S 1.5	23
553.3				
Very stiff, light brown, weathered, CLAY LOAM -TILL		25	S 3.0	13
550.8				
Very dense, brown, SHALE	-15	55		13
549.3				
Very dense, brownish grey, SHALE		160		12
	-20	180		12
542.3		120		1
Extent of exploration.				

Elevation	N	Qu t/s.f.	w (%)
-25			
-30			
-35			
-40			
-45			

N – Standard Penetration Test – Blows per foot to drive 2" O.D. Split Spoon Sampler 12" with 140# hammer falling 30".

Qu – Unconfined Compressive Strength – t/sf

w – Water Content – percentage of oven dry weight – %

Type failure:
B – Bulge Failure
S – Shear Failure
E – Estimated Value

LIN ENGINEERING, LTD. Consulting Engineers

FORM No. B.D. 137 Rev. 9-60 Sh. 2 of 8 Sh.

BRIDGE FOUNDATION BORING LOG

PROJECT
ROUTE FAI-57
SEC. 41-4VB
COUNTY Jefferson
Boring No. 2
Station 1251+22
Offset 47' Rt. ℄

BRIDGE FAI-57 over Southern Railroad
STA. 1252+68.49

Date 9-20-63
Bored By R.C. Dietzen
Checked By G.M. Broom

Surface Water El. —
Groundwater El. at Completion None
After 72 Hours 554.7

Description	Elevation	N	Qu t/s.f.	w (%)
Ground Surface 561.7	0			
Hard, brown mottled tan, SILTY CLAY		18	S 5.3	16
558.2				
Very stiff, brown mottled grey, CLAY LOAM to CLAY	-5	15	S 2.2	18
		12	B 2.0	20
552.7				
Stiff, brown mottled grey, CLAY LOAM and fragments of SHALE	-10	13	S 1.8	20
549.7				
Very dense, brownish grey, SHALE		110		14
	-15	145		12
543.7		160		10
Extent of exploration	-20			

Elevation	N	Qu t/s.f.	w (%)
-25			
-30			
-35			
-40			
-45			

N – Standard Penetration Test – Blows per foot to drive 2" O.D. Split Spoon Sampler 12" with 140# hammer falling 30".

Qu – Unconfined Compressive Strength – t/sf

w – Water Content – percentage of oven dry weight – %

Type failure:
B – Bulge Failure
S – Shear Failure
E – Estimated Value

LIN ENGINEERING, LTD. Consulting Engineers

MODEL: Default
FILE NAME: L:\BOOT\190861\0\WO_8\Draw\Structures\SN 17-181035-Boring Log 3.dgn

CMT
License No. 184-000613

USER NAME = Albert Reinwart	DESIGNED -	REVISED -	
	CHECKED -	REVISED -	
PLOT SCALE = N/A	DRAWN - GLD	REVISED -	
PLOT DATE = 4/30/2021 (12:01:45 PM)	CHECKED - FAS	REVISED -	

STATE OF ILLINOIS
DEPARTMENT OF TRANSPORTATION

BORING LOG 3
STRUCTURE NO. 041–0117 (NB) & 041–0118 (SB)
SHEET 35 OF 38 SHEETS

F.A.I. RTE.	SECTION	COUNTY	TOTAL SHEETS	SHEET NO.
57	(41-4)B-1	JEFFERSON	257	174
		CONTRACT NO. 78550		
	ILLINOIS	FED. AID PROJECT		

FORM NO. B.D. 137 REV. 9-60 — Sh. 3 of 8 — Sh

BRIDGE FOUNDATION BORING LOG

PROJECT
ROUTE FAI-57
SEC. 41-4VB
COUNTY Jefferson

BRIDGE FAI-57 over Southern Railroad
STA. 1252+68.49

Date 9-23-63
Bored By R.C. Dietzen
Checked By G.M. Broom

Boring No. 3
Station 1252+04
Offset 50' Rt. ℄

Surface Water El. —
Groundwater El. at Completion None
After 24 Hours 549.0

Description	Elevation	N	Qu t/s.f.	w (%)
Ground Surface 560.5	0			
Stiff, brown mottled grey, CLAY to CLAY LOAM		12	S 2.0	17
	-5	15	S 1.5	18
553.0				
Dense, brown soft SHALE 551.5		43		15
Very dense, brownish grey, SHALE	-10	90		15
		144		13
	-15	180		10
542.5		180		11
Extent of exploration	-20			

Elevation: -25, -30, -35, -40, -45

N – Standard Penetration Test – Blows per foot to drive 2" O.D. Split Spoon Sampler 12" with 140# hammer falling 30".

Qu – Unconfined Compressive Strength – t/sf

w – Water Content – percentage of oven dry weight – %.

Type failure:
B – Bulge Failure
S – Shear Failure
E – Estimated Value

LIN ENGINEERING, LTD. Consulting Engineers

FORM NO. B.D. 137 REV. 9-60 — Sh. 4 of 8 — Sh

BRIDGE FOUNDATION BORING LOG

PROJECT
ROUTE FAI-57
SEC. 41-4VB
COUNTY Jefferson

BRIDGE FAI-57 over Southern Railroad
STA. 1252+68.49

Date 9-23-63
Bored By R.C. Dietzen
Checked By G.M. Broom

Boring No. 4
Station 1252+76
Offset 47' Lt. ℄

Surface Water El. —
Groundwater El. at Completion 555.6
After 24 Hours 556.7

Description	Elevation	N	Qu t/s.f.	w (%)
Ground Surface 560.2	0			
Stiff, brown mottled grey, CLAY		12	S 1.8	21
556.2				
Stiff, brown, CLAY LOAM	-5			
Free water at elev. 553.7		18	S 1.5	18
553.7				
Medium to dense, alternate 1 ft layers of SANDY LOAM and SILTY LOAM		10	S 0.6	18
550.2	-10			
Stiff, brown CLAY LOAM		16	S 1.2	12
547.7				
Dense, brown SHALE 546.2		53		14
Very dense, brownish grey, SHALE	-15	150		11
541.2		159		9
Very dense, black, SHALE	-20			
539.2		200		19
Extent of exploration				

Elevation: -25, -30, -35, -40, -45

N – Standard Penetration Test – Blows per foot to drive 2" O.D. Split Spoon Sampler 12" with 140# hammer falling 30".

Qu – Unconfined Compressive Strength – t/sf

w – Water Content – percentage of oven dry weight – %.

Type failure:
B – Bulge Failure
S – Shear Failure
E – Estimated Value

LIN ENGINEERING, LTD. Consulting Engineers

MODEL: Default
FILE NAME: L:\IDOT\1190861\0\WO_8\Draw\Structures\SN 17-18\038-Boring Log 4.dgn

CMT
License No. 184-000613
© Copyright CMT, Inc.

USER NAME = Albert Reinwart	DESIGNED -	REVISED -	
	CHECKED -	REVISED -	
PLOT SCALE = N/A	DRAWN - GLD	REVISED -	
PLOT DATE = 4/30/2021 (12:02:16 PM)	CHECKED - FAS	REVISED -	

STATE OF ILLINOIS
DEPARTMENT OF TRANSPORTATION

BORING LOG 4
STRUCTURE NO. 041-0117 (NB) & 041-0118 (SB)
SHEET 36 OF 38 SHEETS

F.A.I. RTE.	SECTION	COUNTY	TOTAL SHEETS	SHEET NO.
57	(41-4)B-1	JEFFERSON	257	175
		CONTRACT NO. 78550		
	ILLINOIS	FED. AID PROJECT		

FORM NO. B.D. 137 REV. 9-60 Sh. 5 of 8 Sh

BRIDGE FOUNDATION BORING LOG

PROJECT
ROUTE FAI-57
SEC. 41-4VB
COUNTY Jefferson
Boring No. 5
Station 1254+20
Offset 47' Lt. ℄

BRIDGE FAI-57 over Southern Railroad
STA. 1252+68.49

Date 9-24-63
Bored By R.C. Dietzen
Checked By G.M. Broom

Surface Water El. ——
Groundwater El. at Completion 547.2
After 24 Hours 557.0

Description	Elevation	N	Qu t/s.f.	w (%)
Ground Surface 568.7	0			
Stiff, grey, SILTY CLAY LOAM				
566.7		13		7
Hard, grey mottled brown, CLAY to CLAY LOAM				
	-5	26	S 4.3	17
		26	S 5.1	11
559.2		23	S 4.0	14
Very stiff, brown, CLAY to CLAY LOAM TILL and fragments of SHALE	-10			
		20	S 3.6	22
3" seam of SANDY LOAM at elev. 555.4				
		37	S 3.4	16
Wet seam at elev. 554.2	-15			
		53	S 3.7	16
550.2				
Stiff, brown CLAY LOAM TILL with GRAVEL and fragments of SHALE	-20	44	S 1.9	15
547.7				
		180		11

Description	Elevation	N	Qu t/s.f.	w (%)
Very dense, brownish grey, SHALE				
	-25	300		1
541.7		240		1
Extent of exploration				
	-30			
	-35			
	-40			
	-45			

N – Standard Penetration Test – Blows per foot to drive 2" O.D. Split Spoon Sampler 12" with 140# hammer falling 30".

Qu – Unconfined Compressive Strength – t/sf

w – Water Content – percentage of oven dry weight of

Type failure:
B – Bulge Failure
S – Shear Failure
E – Estimated Value

LIN ENGINEERING, LTD. Consulting Engineers

FORM NO. B.D. 137 REV. 9-60 Sh. 6 of 8 Sh

BRIDGE FOUNDATION BORING LOG

PROJECT
ROUTE FAI-57
SEC. 41-4VB
COUNTY Jefferson
Boring No. 6
Station 1252+87
Offset 47' Rt. ℄

BRIDGE FAI-57 over Southern Railroad
STA. 1252+68.49

Date 9-25-63
Bored By R.C. Dietzen
Checked By G.M. Broom

Surface Water El. ——
Groundwater El. at Completion None
After 24 Hours 551.2

Description	Elevation	N	Qu t/s.f.	w (%)
Ground Surface 570.2	0			
Medium, brown SILTY CLAY LOAM				
545.7		105		1
	-25			
Extent of exploration				
The top 4 or 5 feet of soil at this location is wasted material from R.R. cut.				
	-5	5	S 0.6	22
564.7				
Stiff, grey mottled brown, SILTY CLAY		12	S 1.9	25
562.2				
	-30			
Stiff, brown mottled grey, CLAY to CLAY LOAM		12	S 1.5	19
	-10			
		14	B 2.3	21
	-35			
		14	S 1.7	24
555.2	-15			
Very stiff, brown mottled grey, CLAY TILL and fragments of SHALE		27	S 2.4	18
	-40			
550.7				
Very dense, brownish grey, SHALE	-20	100		13
		115		10
	-45			

N – Standard Penetration Test – Blows per foot to drive 2" O.D. Split Spoon Sampler 12" with 140# hammer falling 30".

Qu – Unconfined Compressive Strength – t/sf

w – Water Content – percentage of oven dry weight of

Type failure:
B – Bulge Failure
S – Shear Failure
E – Estimated Value

LIN ENGINEERING, LTD. Consulting Engineers

MODEL: Default
FILE NAME: L:\IDOT\1190861\0\WO_8\Draw\Structures\SN 17-18\037-Boring Log 5.dgn

CMT
License No. 184-000613

USER NAME = Albert Reinwart	DESIGNED -	REVISED -
	CHECKED -	REVISED -
PLOT SCALE = N/A	DRAWN - GLD	REVISED -
PLOT DATE = 4/30/2021 (12:02:43 PM)	CHECKED - FAS	REVISED -

STATE OF ILLINOIS
DEPARTMENT OF TRANSPORTATION

BORING LOG 5
STRUCTURE NO. 041–0117 (NB) & 041–0118 (SB)
SHEET 37 OF 38 SHEETS

F.A.I. RTE.	SECTION	COUNTY	TOTAL SHEETS	SHEET NO.
57	(41-4)B-1	JEFFERSON	257	176
		CONTRACT NO. 78550		
		ILLINOIS	FED. AID PROJECT	

FORM NO. B.D. 137 REV. 9-60 Sh. 7 of 8 Sh

BRIDGE FOUNDATION BORING LOG

PROJECT
ROUTE FAI-57
SEC. 41-4VB
COUNTY Jefferson
Boring No. 7
Station 1253+68
Offset 47' Lt. ℄

BRIDGE FAI-57 Southern Railroad
STA. 1252+68.49

Date 9-26-63
Bored By R.C. Dietzen
Checked By G.M. Broom

Surface Water El. ——
Groundwater El. at Completion 551.9
After 24 Hours 556.7

Description	Elevation	N	Qu t/s.f.	w (%)
Ground Surface	572.9 0			
Stiff, grey speckled brown, CLAY				
The top 5 or 6 ft of soil at this location is wasted material from R.R. cut.		13		12
	-5			
	566.9			
*	565.9	23		9
Hard, brown mottled grey, CLAY		35	S 7.8	14
	-10			
Wet seam at elev. 559.9		30	S 8.4	10
		25	S 5.4	12
	-15			
	555.9	22	S 2.9	17
Stiff, brown, gravelly, CLAY LOAM TILL				
		10	S 1.7	15
	-20			
	552.4			
		99	S 3.4	9

Description	Elevation	N	Qu t/s.f.	w (%)
Very stiff, brown, CLAY LOAM to SANDY CLAY LOAM TILL				
		66	S 3.7	2
	-25			
		110	S 3.1	1
	544.9			
Very dense, brownish grey, SHALE		200		1
	-30			
	540.9	500		1
Extent of exploration				
* stiff, grey, SILTY CLAY LOAM				
	-35			
	-40			
	-45			

N – Standard Penetration Test – Blows per foot to drive 2" O.D. Split Spoon Sampler 12" with 140# hammer falling 30".

Qu – Unconfined Compressive Strength – t/sf

w – Water Content – percentage of oven dry weight – %.

Type failure:
B – Bulge Failure
S – Shear Failure
E – Estimated Value

LIN ENGINEERING, LTD. Consulting Engineers

FORM NO. B.D. 137 REV. 9-60 Sh. 8 of 8 Sh

BRIDGE FOUNDATION BORING LOG

PROJECT
ROUTE FAI-57
SEC. 41-4VB
COUNTY Jefferson
Boring No. 8
Station 1253+40
Offset 47' Rt. ℄

BRIDGE FAI-57 over Southern Railroad
STA. 1252+68.49

Date 9-27-63
Bored By R.C. Dietzen
Checked By G.M. Broom

Surface Water El. ——
Groundwater El. at Completion 555.5
After -- Hours ---

Description	Elevation	N	Qu t/s.f.	w (%)
Ground Surface	567.7 0			
Stiff, grey, SILTY CLAY LOAM				
		14		10
	565.2			
Hard, brown mottled grey, CLAY				
	563.2	35	S 5.3	14
	-5			
Very stiff, brown mottled grey, CLAY		19	S 2.6	15
	-10			
		19	S 2.9	16
		25	S 2.1	17
	-15			
	552.2			
Free water at elev. 551.7 Medium, brown, SANDY LOAM to LOAM		18	S 0.9	15
	549.7			
Hard, brown mottled grey, CLAY LOAM TILL		47	S 4.9	14
	547.7 -20			
Very dense, brownish grey SHALE		140		12

Description	Elevation	N	Qu t/s.f.	w (%)
Very dense, brownish grey, SHALE				
		135		1
	-25			
	541.7			
Hard, black, COAL	540.7	300		20
Extent of exploration				
	-30			
	-35			
	-40			
	-45			

N – Standard Penetration Test – Blows per foot to drive 2" O.D. Split Spoon Sampler 12" with 140# hammer falling 30".

Qu – Unconfined Compressive Strength – t/sf

w – Water Content – percentage of oven dry weight – %.

Type failure:
B – Bulge Failure
S – Shear Failure
E – Estimated Value

LIN ENGINEERING, LTD. Consulting Engineers

MODEL: Default
FILE NAME: L:\IDOT\1906810\WO_R\Drw\Structures\SN 17-18\038-Boring Log B.dgn

CMT
License No. 184-000613 © Copyright CMT, Inc.

USER NAME = Albert Reinwart	DESIGNED -	REVISED -	
	CHECKED -	REVISED -	
PLOT SCALE = N/A	DRAWN - GLD	REVISED -	
PLOT DATE = 4/30/2021 (12:03:10 PM)	CHECKED - FAS	REVISED -	

STATE OF ILLINOIS
DEPARTMENT OF TRANSPORTATION

BORING LOG 6
STRUCTURE NO. 041–0117 (NB) & 041–0118 (SB)
SHEET 38 OF 38 SHEETS

F.A.I. RTE.	SECTION	COUNTY	TOTAL SHEETS	SHEET NO.
57	(41-4)B-1	JEFFERSON	257	177
		CONTRACT NO. 78550		
		ILLINOIS FED. AID PROJECT		

B.M. NO. 25 6" SPIKE IN ROOT OF 30" B. OAK 115' LT. STA. 1252+97 ELEVATION 550.95

"Excavation for portions of structures in the embankments shall not be classified."

STATE OF ILLINOIS
DEPARTMENT OF PUBLIC WORKS & BUILDINGS
DIVISION OF HIGHWAYS

RT. NO.	SECTION	COUNTY	TOTAL SHEETS	SHEET NO.	SHEET NO. 1
F.A.I. 57	*	JEFFERSON	298	57	20 SHEETS
FED. ROAD DIST. NO. 7	ILLINOIS	FED. AID PROJECT: I-IG-57-3(15)95			

*41-3A-2, 41-4A & 41-4HB-2

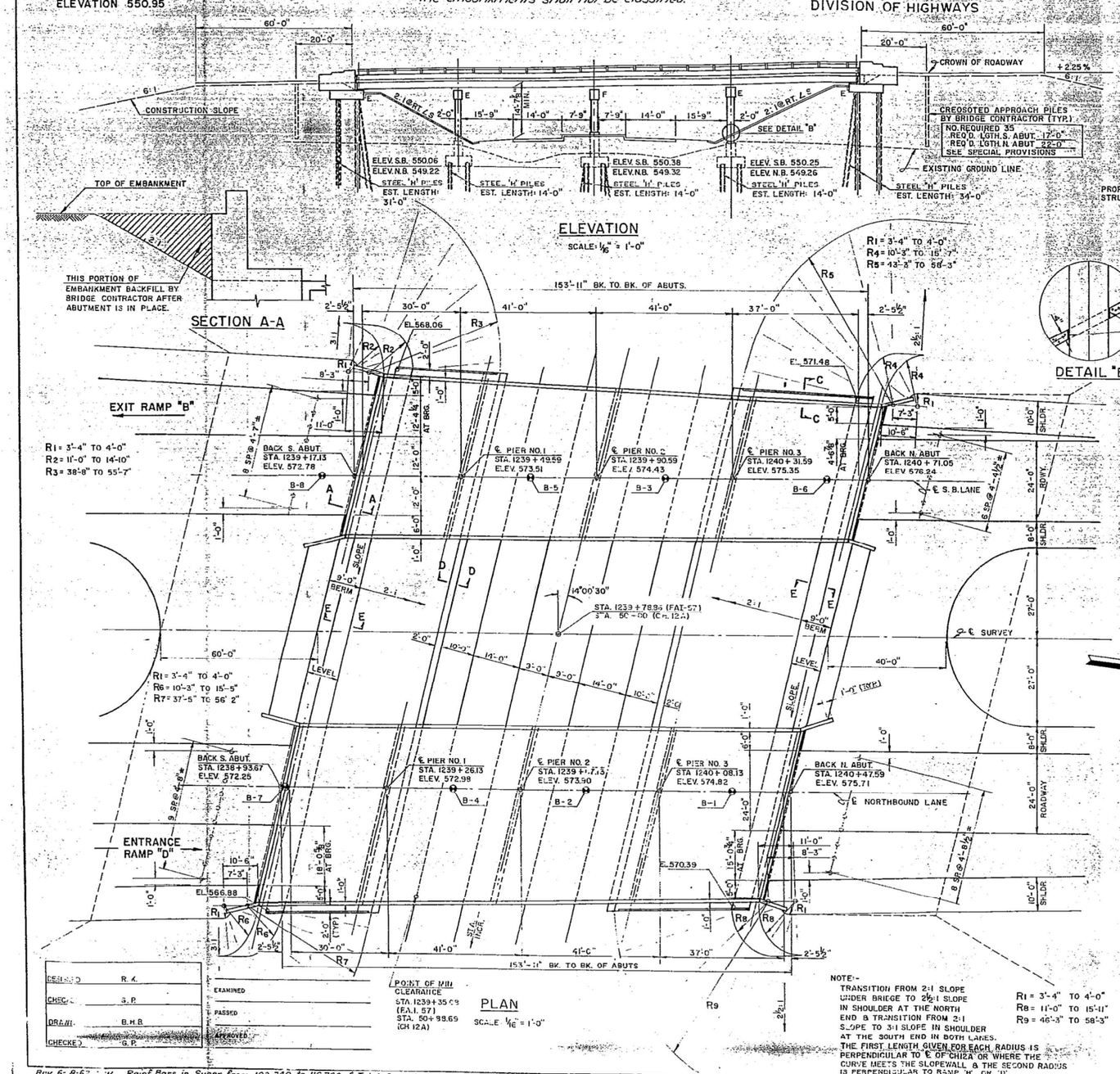

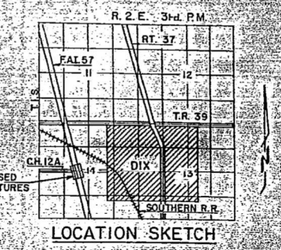

LOCATION SKETCH

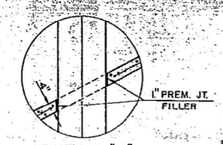

DETAIL "B"

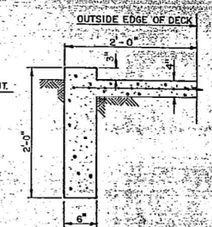

SECTION C-C

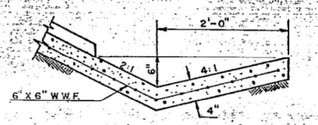

SECTION D-D

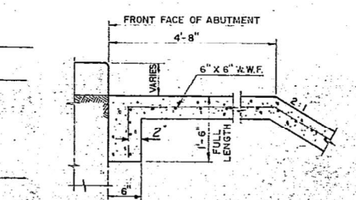

SECTION E-E

GENERAL NOTES

COARSE AGGREGATE, WHICH IS TO BE USED IN END POSTS & PARAPET HANDRAILS MUST BE FREE OF CHERT, FLINT, LIMONITE, LIGNITE AND SOFT SANDSTONE.

THE CONCRETE FLOOR SLAB SHALL BE FINISHED IN ACCORDANCE WITH ARTICLE 51.19 OF THE STANDARD SPECIFICATIONS.

SLOPEWALL SHALL BE REINFORCED WITH WELDED WIRE FABRIC 6"X6" MESH WEIGHING 58 LBS. PER 100 SQ. FT.

LAYOUT OF SLOPEWALLS MAY BE VARIED TO SUIT GROUND CONDITIONS IN THE FIELD AS DIRECTED BY THE ENGINEER.

STRUCTURAL STEEL SHALL CONFORM TO A.S.T.M. DESIGNATION A-36.

ALL BOLSTERS, ROCKERS, SHIM PLATES, PINTLES AND ANCHOR BOLTS SHALL BE FABRICATED AND SET IN ACCORDANCE WITH ARTICLE 51.15 OF STANDARD SPECIFICATIONS.

ANCHOR BOLTS SHALL BE SET BEFORE RIVETING DIAPHRAGMS OVER SUPPORTS.

EXPANSION GUARDS SHALL BE FABRICATED AND ERECTED IN ACCORDANCE WITH ARTICLE 51.13 (d) OF THE STANDARD SPECIFICATIONS AND ARE INCLUDED IN QUANTITY OF STRUCTURAL STEEL. ESTIMATED WEIGHT = 5,394 LBS.

EXCEPT AS OTHERWISE PROVIDED, ALL STRUCTURAL STEEL SHALL RECEIVE ONE SHOP COAT OF RED LEAD PAINT AND TWO FIELD COATS OF ALUMINUM PAINT. SEE ARTICLES 56.1 TO 56.5 INCLUSIVE OF THE STANDARD SPECIFICATIONS.

THE EXPOSED SURFACES OF THE EXPANSION GUARD SHALL BE GIVEN TWO SHOP COATS OF RED LEAD PAINT, THE CONTACT SURFACES SHALL BE GIVEN ONE COAT OF RED LEAD PAINT, ANCHOR STUDS SHALL NOT BE PAINTED.

PERMANENT FORMS WILL NOT BE PERMITTED IN FORMING THE CONCRETE FLOOR.

THE CONTRACTOR SHALL DRIVE ONE STEEL TEST PILE IN A PERMANENT LOCATION AT THE SOUTH ABUTMENT AND PIER NO. 3 OF EACH STRUCTURE AS DIRECTED BY THE ENGINEER BEFORE ORDERING THE REMAINDER OF THE PILES.

All reinforcement bars shall be lapped 20 diameters unless shown otherwise.

Rivets 3/4" ϕ, open holes 13/16" ϕ unless shown otherwise.

STATION 1239+78.86
BUILT 196 BY
STATE OF ILLINOIS
F.A.I. RT. 57 SEC. 41-4HB-2
F.A. PROJ. I-IG-57-3(15)
LOADING HS-20 & ALT.

NAMEPLATE
SEE STD. 2113-1

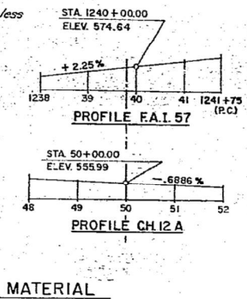

TOTAL BILL OF MATERIAL

	ITEM	UNIT	SUPER	SUB	TOTAL
	FURNISHING & ERECTING STRUCTURAL STEEL	LBS.	282,070		282,070
	CLASS A EXCAVATION FOR STRUCTURES	CU. YDS.		283	283
	CLASS X CONCRETE	CU. YDS.	402.3	573.0	975.3
	REINFORCEMENT STEEL	LBS.	116,700	58,760	175,460
	SLOPEWALL 4"	SQ. YDS.		1557	1557
	FURNISHING CREOSOTED PILES (UP TO 20.0')	LIN. FT.		323	323
	FURNISHING CREOSOTED PILES (20.1' TO 38.0')	LIN. FT.		352	352
	STEEL TEST PILE (8 BP36)	EACH		4	4
	FURNISHING STEEL PILES (8 BP36)	LIN. FT.		2,560	2,560
	ALUMINUM HANDRAIL	LIN. FT.	602		602
	NAMEPLATES	EACH	2		2
	PROTECTIVE COAT	SQ. YDS.	1650		1650
*	BRIDGE SEAT SEALANT	LUMP SUM			1
	DRIVING STEEL PILES	LIN. FT.		2,560	2,560
	DRIVING TIMBER PILES	LIN. FT.		675	675

*AT ABUTMENTS ONLY

FIELD WELDING OF CONSTRUCTION ACCESSORIES TO THE BOTTOM FLANGES OR FOR A DISTANCE OF 1/4 OF THE SPAN EACH WAY FROM PIER SUPPORTS ON THE TOP FLANGES OF BEAMS OR GIRDERS WILL NOT BE PERMITTED. FIELD WELDING IN OTHER AREAS WILL BE PERMITTED ONLY WHEN APPROVED BY THE ENGINEER.

DESIGN STRESSES

f_c = 1400 P.S.I. SUPER & SUB.
v_c = 75 P.S.I. FTGS.
f_s = 20,000 P.S.I. REINF.
f_s = 20,000 P.S.I. STRUCTURE
n = 10

NOTE:-
TRANSITION FROM 2:1 SLOPE UNDER BRIDGE TO 2 1/2:1 SLOPE IN SHOULDER AT THE NORTH END & TRANSITION FROM 2:1 SLOPE TO 3:1 SLOPE IN SHOULDER AT THE SOUTH END IN BOTH LANES. THE FIRST LENGTH GIVEN FOR EACH RADIUS IS PERPENDICULAR TO ℄ OF CHIRA OR WHERE THE CURVE MEETS THE SLOPEWALL & THE SECOND RADIUS IS PERPENDICULAR TO RAMP "B" OR "D".

LOADING HS-20-44 & ALT.

GENERAL PLAN & ELEVATION
PROJ. I-IG-57-3 (15) 95
F.A.I. 57 OVER C.H. 12A
F.A.I. 57 - SEC 41-4HB-2
JEFFERSON COUNTY
STA. 1239+78.86

Rev. 6-8-67 Reinf. Bars in Super from 102,740 to 116,700 # Total from 161,500 to 175,460 #. Class X Conc in Super from 393.7 to 402.3 Total from 966.7 to 975.3 Cu. Yds. Aluminum Handrail from 597 to 602 Lin. Ft. Protective Coat from 1595 to 1650 Sq. Yds. Str. Steel from 282,464 # to 282,070 #.

DESIGNED	R. K.	EXAMINED	
CHECKED	G. P.	PASSED	
DRAWN	B.H.B.	APPROVED	
CHECKED	G. P.		

MODEL: PLOT
FILE NAME: Y:\DOT\1295-11_78550\CADD\Highway\CADD Sheets\0978050-sht-rem101.dgn

ESCA CONSULTANTS, INC.

USER NAME = skm	DESIGNED - JMK	REVISED -	
ESCA PROJECT NO. 1295.11	DRAWN - JMK	REVISED -	
PLOT SCALE = 0.1667 ' / in.	CHECKED - ELH	REVISED -	
PLOT DATE = 12/23/2020	DATE - 11/20	REVISED -	

STATE OF ILLINOIS
DEPARTMENT OF TRANSPORTATION

SN 041-0014 / 0015 BRIDGE PLANS
FOR INFORMATION ONLY

SCALE: NONE | SHEET NO. 1 OF 15 SHEETS | STA. | TO STA.

F.A.I. RTE.	SECTION	COUNTY	TOTAL SHEETS	SHEET NO.
57	(41-4)B-1;(41-4)B-2	JEFFERSON	257	178

CONTRACT NO. 78550
ILLINOIS | FED. AID PROJECT

NOTES:-
BARS INDICATED THUS 22 X 5-5 ETC. INDICATES 22 LINES OF BARS WITH 5 LENGTHS PER LINE.
MIN. BAR LAP 20 DIA.

STATE OF ILLINOIS
DEPARTMENT OF PUBLIC WORKS & BUILDINGS
DIVISION OF HIGHWAYS

ROUTE NO.	SECTION	COUNTY	TOTAL SHEETS	SHEET NO.
F.A.I. 57	*	JEFFERSON	298	58
FED. ROAD DIST. NO. 7		ILLINOIS	FED. AID PROJECT	

*41-3A-2, 41-4A & 41-4HB-2

SHEET NO. 2
20 SHEETS

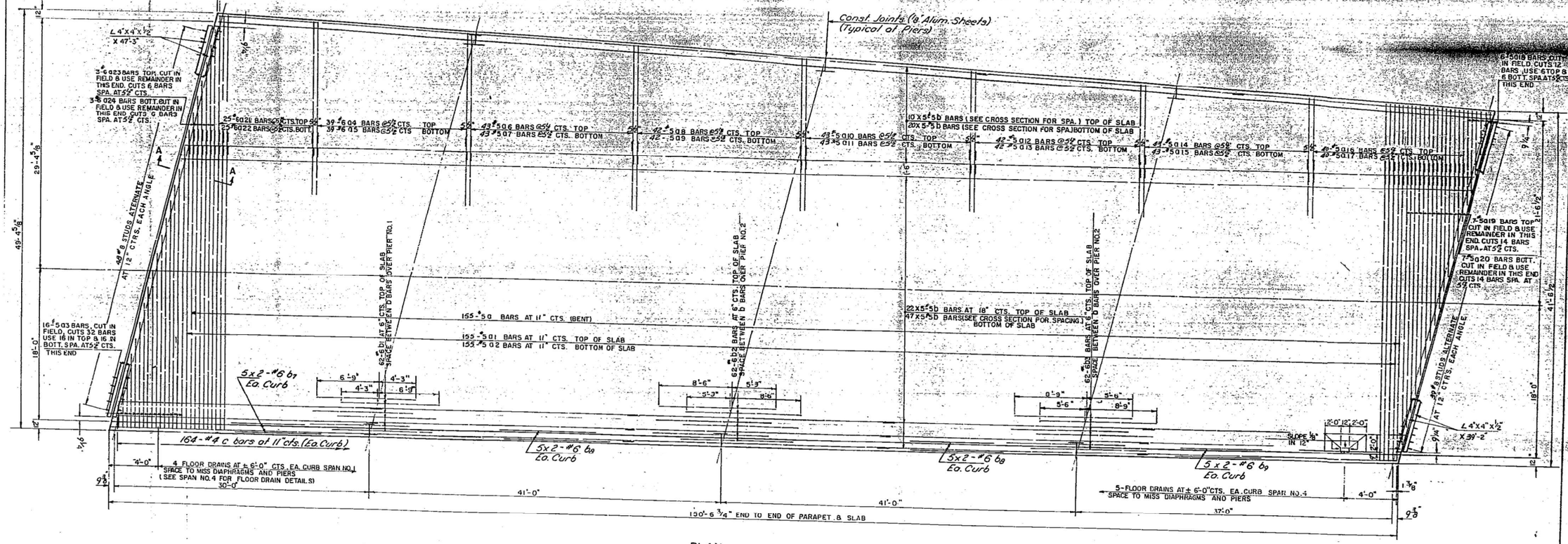

PLAN

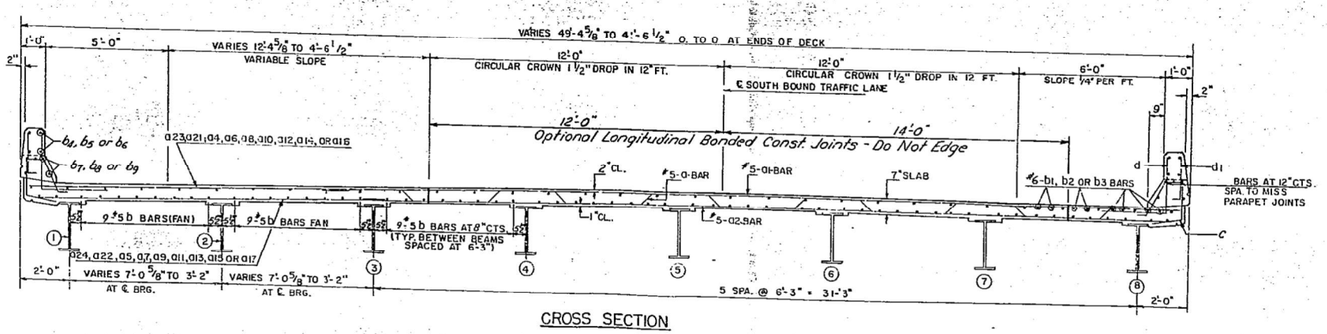

CROSS SECTION

NOTE:- WORK THIS SHEET WITH SHEET 4.

DESIGNED	R.K.	
CHECKED	G.P.	
DRAWN	P.E.	
CHECKED	G.P.	

EXAMINED _____ 19
ENGINEER OF BRIDGE AND TRAFFIC STRUCTURES
PASSED _____
ENGINEER OF DESIGN
APPROVED _____
CHIEF HIGHWAY ENGINEER

SUPERSTRUCTURE S.B. LANE
F.A.I. 57-SEC. 41-4HB-2
JEFFERSON COUNTY
STA. 1239+78.86

Rev Top of Slab reinf. cl. from 1 1/2" to 2" Revised curb configuration 6-8-67 L.W.

MODEL: PLOT
FILE NAME: Y:\DOT\1295-11-78550\CADD\Highway\CADD Sheets\0978550-sht-rem102.dgn

ESCA CONSULTANTS, INC.

USER NAME = skm	DESIGNED - JMK	REVISED -	
ESCA PROJECT NO. 1295.11	DRAWN - JMK	REVISED -	
PLOT SCALE = 0.1667 ' / in.	CHECKED - ELH	REVISED -	
PLOT DATE = 12/23/2020	DATE - 11/20	REVISED -	

STATE OF ILLINOIS
DEPARTMENT OF TRANSPORTATION

SN 041-0014 / 0015 BRIDGE PLANS
FOR INFORMATION ONLY

SCALE: NONE | SHEET NO. 2 OF 15 SHEETS | STA. | TO STA.

F.A.I. RTE.	SECTION	COUNTY	TOTAL SHEETS	SHEET NO.
57	(41-4)B-1;(41-4)B-2	JEFFERSON	257	179

CONTRACT NO. 78550
ILLINOIS | FED. AID PROJECT

NOTES:
BARS INDICATED THUS 32X5 ETC. INDICATES 32 LINES OF BARS WITH 5 LENGTHS PER LINE.
MIN. BAR LAP 20 DIA.

STATE OF ILLINOIS
DEPARTMENT OF PUBLIC WORKS & BUILDINGS
DIVISION OF HIGHWAYS

ROUTE NO.	SECTION	COUNTY	TOTAL SHEETS	SHEET NO.
F.A.I. 57	*	JEFFERSON	298	59
FED. ROAD DIST. NO. 7		ILLINOIS	FED. AID PROJECT	

SHEET NO. 3
20 SHEETS

*41-3A2, 41-4A & 41-4HB-2

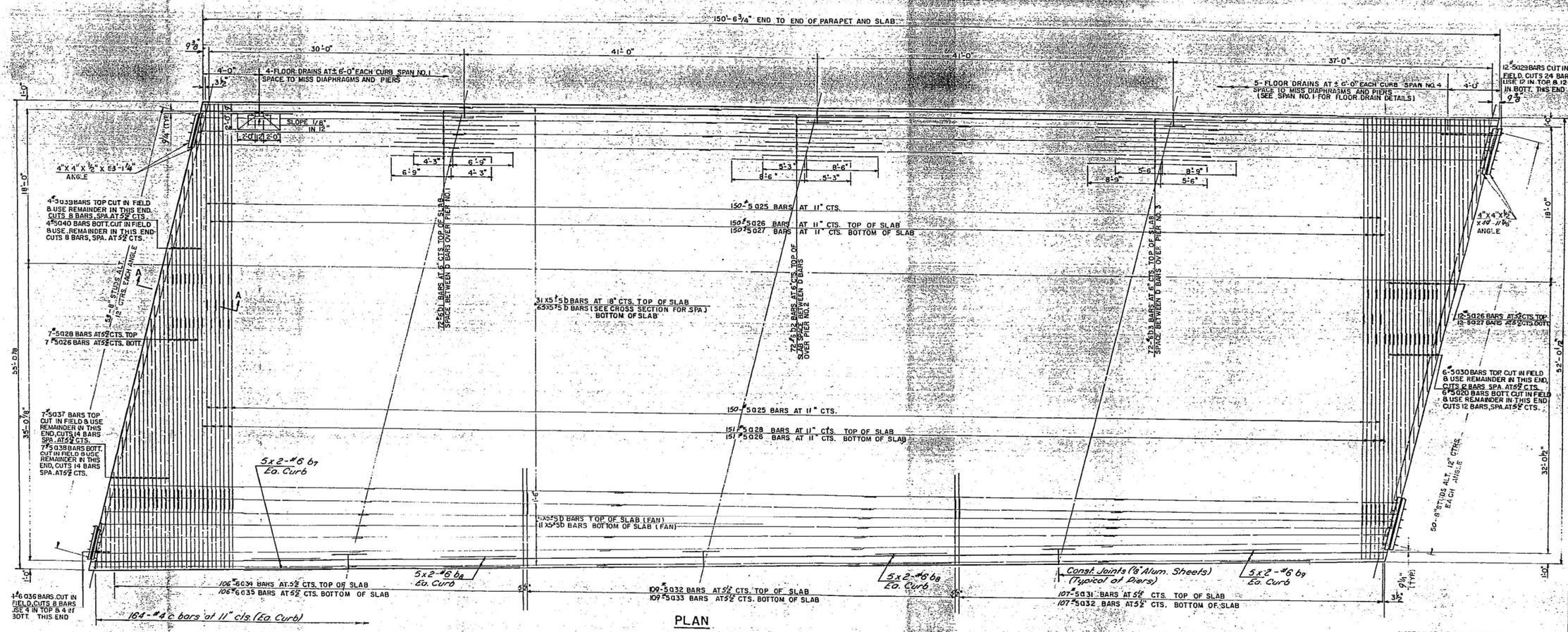

NOTE: WORK THIS SHEET WITH SHEET 4.

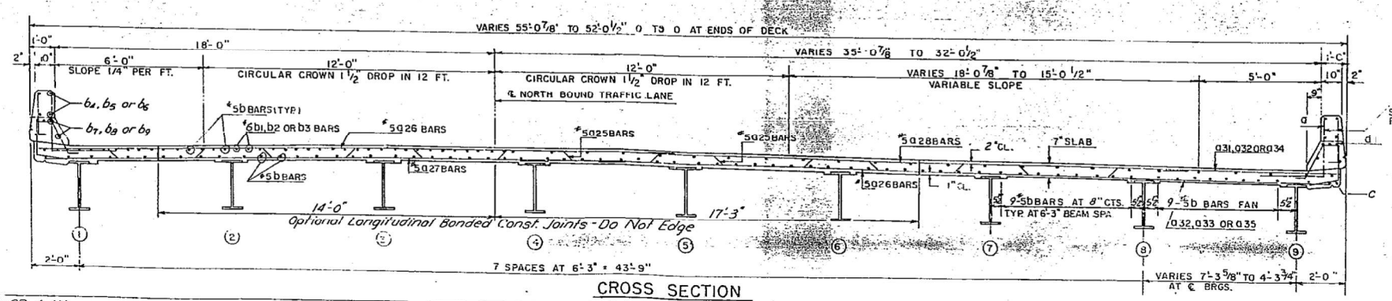

CROSS SECTION

DESIGNED	R. K.	
CHECKED	G. E. P.	
DRAWN	J.P.S.	
CHECKED	G. E. P.	

EXAMINED 19
PASSED — ENGINEER OF BRIDGE AND TRAFFIC STRUCTURES
APPROVED — ENGINEER OF DESIGN
CHIEF HIGHWAY ENGINEER

Rev Top of Slab reinf'd from 1'2 to 2" Rev Curb Configuration 6-8-67 J.W.

SUPERSTRUCTURE N.B. LANE
F.A.I. 57-SEC. 41-4HB-2
JEFFERSON COUNTY
STA. 1239 + 78.86

ESCA CONSULTANTS, INC.

USER NAME = skm	DESIGNED - JMK	REVISED -	
ESCA PROJECT NO. 1295.11	DRAWN - JMK	REVISED -	
PLOT SCALE = 0.1667 ' / in.	CHECKED - ELH	REVISED -	
PLOT DATE = 12/23/2020	DATE - 11/20	REVISED -	

STATE OF ILLINOIS
DEPARTMENT OF TRANSPORTATION

SN 041-0014 / 0015 BRIDGE PLANS
FOR INFORMATION ONLY

SCALE: NONE | SHEET NO. 3 OF 15 SHEETS | STA. | TO STA.

F.A.I. RTE.	SECTION	COUNTY	TOTAL SHEETS	SHEET NO.
57	(41-4)B-1;(41-4)B-2	JEFFERSON	257	180
		CONTRACT NO. 78550		
		ILLINOIS	FED. AID PROJECT	

MODEL: PLOT
FILE NAME: Y:\DOT\1295-11_78550\CADD\Highway\CADD Sheets\0978550-sht-rm103.dgn

STATE OF ILLINOIS
DEPARTMENT OF PUBLIC WORKS & BUILDINGS
DIVISION OF HIGHWAYS

ROUTE NO.	SECTION	COUNTY	TOTAL SHEETS	SHEET NO.
F.A.I. 57	*	JEFFERSON	298	60
FED. ROAD DIST. NO. 7		ILLINOIS	FED. AID PROJECT	

SHEET NO. 4
20 SHEETS

*41-3A-2, 41-4A & 41-4HB-2

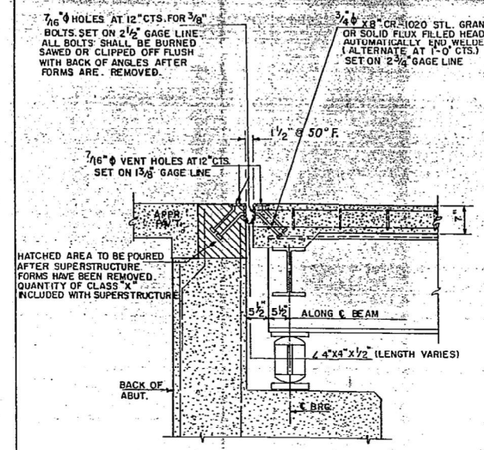

SECTION A-A

STANDARD FILLET DETAIL

TO DETERMINE "I" AFTER ALL STRUCTURAL STEEL HAS BEEN ERECTED, ELEVATIONS OF THE TOP FLANGES OF THE BEAMS SHALL BE TAKEN AT INTERVALS SHOWN ON SHEET 6 THESE ELEVATIONS SUBTRACTED FROM THE GRADE ELEVATIONS ADJUSTED FOR DEAD LOAD DEFLECTIONS, SHOWN ON SHEET 18 & 19 MINUS SLAB THICKNESS, EQUALS THE FILLET HIGHT "I" ABOVE TOP OF BEAMS.

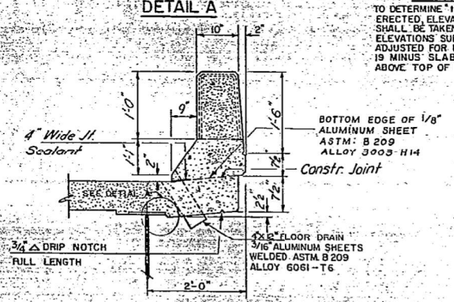

PARAPET DETAILS

COST OF ALUMINUM DRAINS AND SHEETS SHALL BE INCIDENTAL TO CLASS X CONCRETE

BILL OF MATERIALS SLAB (SOUTH BOUND STRUCTURE)

BAR	NO.	SIZE	LENGTH	SHAPE
a	155	#5	36'-3"	
a1	155	#5	35'-0"	
a2	155	#5	33'-6"	
a3	16	#5	35'-10"	
a4	39	#6	14'-4"	
a5	39	#6	15'-9"	
a6	43	#5	13'-4"	
a7	43	#5	14'-9"	
a8	42	#5	12'-4"	
a9	42	#5	13'-9"	
a10	43	#5	11'-4"	
a11	43	#5	12'-9"	
a12	42	#5	10'-4"	
a13	42	#5	11'-9"	
a14	43	#5	9'-4"	
a15	43	#5	10'-9"	
a16	40	#5	8'-4"	
a17	40	#5	9'-9"	
a18	6	#5	12'-6"	
a19	7	#5	40'-0"	
a20	7	#5	37'-0"	
a21	26	#6	15'-0"	
a22	25	#6	16'-6"	
a23	3	#6	16'-9"	
a24	3	#6	19'-6"	
b	495	#5	31'-0"	
b1	62	#6	11'-0"	
b2	62	#6	13'-9"	
b3	62	#6	14'-3"	
b4	16	#5	18'-0"	
b5	32	#5	20'-0"	
b6	16	#5	18'-6"	
b7	20	#6	16'-0"	
b8	40	#6	21'-0"	
b9	20	#6	19'-6"	
d	300	#6	5'-9"	
d1	300	#4	2'-6"	
c	328	#4	5'-2"	
CLASS X CONCRETE		CU. YDS.	186.2	
REINFORCEMENT BARS		LBS.	94,800	
STRUCTURAL STEEL		LBS.	132,340	

WEIGHT OF BEARING ASSEMBLIES WITH LEAD PLATES AND ANCHOR BOLTS ARE INCLUDED AS STRUCTURAL STEEL.
EST. WEIGHT= 9,360 LBS.

BILL OF MATERIALS SLAB (NORTH BOUND STRUCTURE)

BAR	NO.	SIZE	LENGTH	SHAPE
a20	6	#5	38'-6"	
a25	300	#5	25'-0"	
a26	320	#5	26'-3"	
a27	162	#5	21'-0"	
a28	158	#5	22'-0"	
a29	12	#5	30'-6"	
a30	6	#5	27'-6"	
a31	107	#5	6'-6"	
a32	216	#5	7'-6"	
a33	109	#5	8'-6"	
a34	106	#6	8'-6"	
a35	106	#6	9'-6"	
a36	4	#6	12'-6"	
a37	7	#5	34'-3"	
a38	7	#5	31'-9"	
a39	4	#5	35'-6"	
a40	4	#5	25'-0"	
b	565	#5	31'-0"	
b1	72	#6	11'-0"	
b2	72	#6	13'-9"	
b3	72	#6	14'-3"	
b4	16	#5	18'-0"	
b5	32	#5	20'-0"	
b6	16	#5	18'-6"	
b7	20	#6	16'-0"	
b8	40	#6	21'-0"	
b9	20	#6	19'-6"	
d	303	#6	5'-9"	
d1	303	#4	2'-6"	
c	328	#4	5'-2"	
CLASS X CONCRETE		CU. YDS.	216.1	
REINFORCEMENT BARS		LBS.	61,900	
STRUCTURAL STEEL		LBS.	149,730	

WEIGHT OF BEARING ASSEMBLIES WITH LEAD PLATES AND ANCHOR BOLTS ARE INCLUDED AS STRUCTURAL STEEL.
EST. WEIGHT= 10,480 LBS.

NOTE:- WORK THIS SHEET WITH SHEETS 2 & 3.

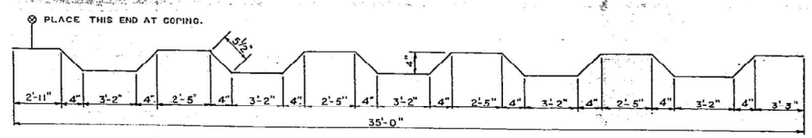

BAR a

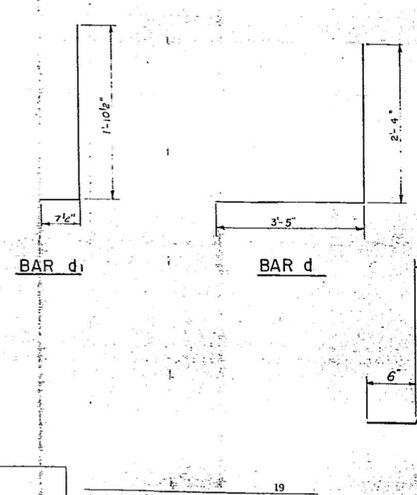

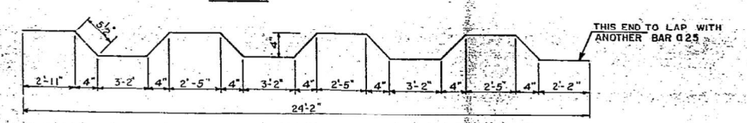

BAR a25

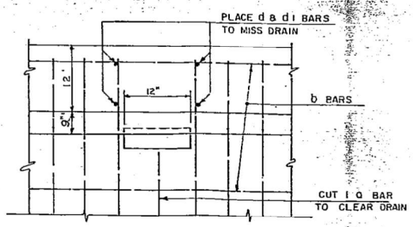

TYP DETAIL AT DRAIN

DESIGNED	R. K.	
CHECKED	G. P.	
DRAWN	J. P. E.	
CHECKED	G. P.	

19
EXAMINED
ENGINEER OF BRIDGE AND TRAFFIC STRUCTURES
PASSED
ENGINEER OF DESIGN
APPROVED
CHIEF HIGHWAY ENGINEER

Rev. 6-8-57 L.W. N. Bd. Struct Reinf Bars from 55,260 to 61,900# & Class X Conc. from 211.8 to 216.1 Cu.Yds. Str. Steel from 150,107# to 149,730#.
S. Bd. Struct. Reinf. Bars from 47,480 to 54,800# & Class X Conc. from 181.9 to 186.2 Cu.Yds. Curb configuration revised. Str. Steel from 132,337# to 132,340#.

SUPERSTRUCTURE DETAILS
F.A.I. 57-SEC. 41-4HB-2
JEFFERSON COUNTY
STA. 1239+78.86

MODEL: PLOT
FILE NAME: Y:\IDOT\1295-11_78550\CADD\Highway\CADD Sheets\0978550-sht-rom104.dgn

ESCA CONSULTANTS, INC.

USER NAME = skm	DESIGNED - JMK	REVISED -	
ESCA PROJECT NO. 1295.11	DRAWN - JMK	REVISED -	
PLOT SCALE = 0.1667 ' / in.	CHECKED - ELH	REVISED -	
PLOT DATE = 12/23/2020	DATE - 11/20	REVISED -	

STATE OF ILLINOIS
DEPARTMENT OF TRANSPORTATION

SN 041-0014 / 0015 BRIDGE PLANS
FOR INFORMATION ONLY

SCALE: NONE | SHEET NO. 4 OF 15 SHEETS | STA. | TO STA.

F.A.I. RTE.	SECTION	COUNTY	TOTAL SHEETS	SHEET NO.
57	(41-4)B-1;(41-4)B-2	JEFFERSON	257	181
		CONTRACT NO. 78550		
		ILLINOIS FED. AID PROJECT		

STATE OF ILLINOIS
DEPARTMENT OF PUBLIC WORKS & BUILDINGS
DIVISION OF HIGHWAYS

ROUTE NO.	SECTION	COUNTY	TOTAL SHEETS	SHEET NO.	SHEET NO. 5
F.A.I. 57	*	JEFFERSON	298	61	20 SHEETS
FED. ROAD DIST. NO. 7	ILLINOIS	FED. AID PROJECT			

* 41-3A-2, 41-4A, & 41-4HB-2

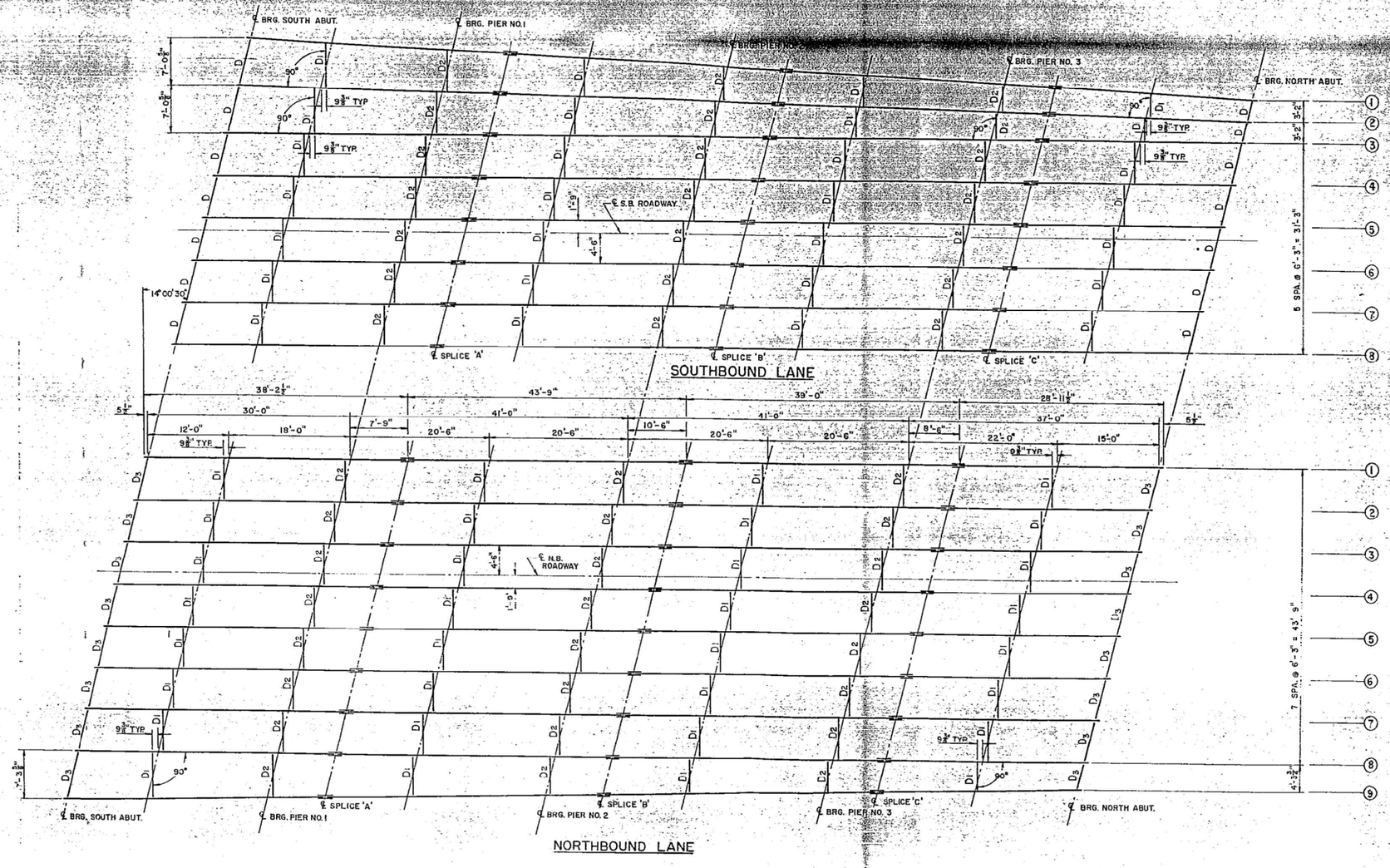

ALL BEAMS 24 WF 84

NOTE: WORK THIS SHEET WITH SHEET NO. 6

DESIGNED:	R. K.
CHECKED	G. P.
DRAWN	B.H.B.
CHECKED	G. P.

1965
EXAMINED
ENGINEER OF BRIDGE & TRAFFIC STRUCTURES
PASSED
ENGINEER OF DESIGN
APPROVED
CHIEF HIGHWAY ENGINEER

STRUCTURAL STEEL
F.A.I. 57 – SEC. 41-4HB-2
JEFFERSON COUNTY
STA. 1239 + 78.86

MODEL: PLOT
FILE NAME: Y:\DOT\1295-11_78550\CADD\Highway\CADD Sheets\0978550-sht-rem105.dgn

ESCA CONSULTANTS, INC.

USER NAME = skm	DESIGNED - JMK	REVISED -	
ESCA PROJECT NO. 1295.11	DRAWN - JMK	REVISED -	
PLOT SCALE = 0.1667 ' / in.	CHECKED - ELH	REVISED -	
PLOT DATE = 12/23/2020	DATE - 11/20	REVISED -	

STATE OF ILLINOIS
DEPARTMENT OF TRANSPORTATION

SN 041–0014 / 0015 BRIDGE PLANS
FOR INFORMATION ONLY

SCALE: NONE | SHEET NO. 5 OF 15 SHEETS | STA. | TO STA.

F.A.I. RTE.	SECTION	COUNTY	TOTAL SHEETS	SHEET NO.
57	(41-4)B-1;(41-4)B-2	JEFFERSON	257	182
		CONTRACT NO. 78550		
	ILLINOIS	FED. AID PROJECT		

STATE OF ILLINOIS
DEPARTMENT OF PUBLIC WORKS & BUILDINGS
DIVISION OF HIGHWAYS

ROUTE NO.	SECTION	COUNTY	TOTAL SHEETS	SHEET NO.	SHEET NO. 6
F.A.I. 57	*	JEFFERSON	298	62	20 SHEETS
FED. ROAD DIST. NO. 7	ILLINOIS	FED. AID PROJECT			

* 41-3A2, 41-4A & 41-4HB-2

BEAM	S. ABUT.	PIER #1	PIER #2	PIER #3	N. ABUT.
1	—	—	—	—	—
2	—	—	—	—	5/8"
3	—	—	—	—	—
4	5/8"	5/8"	5/8"	5/8"	—
5	5/8"	5/8"	5/8"	5/8"	—
6	—	—	—	—	5/8"
7	—	—	—	—	—
8	—	—	—	—	—

DIMENSION "t" S.B. LANE

BEAM	S. ABUT.	PIER #1	PIER #2	PIER #3	N. ABUT.
1	—	—	—	—	—
2	—	—	—	—	—
3	5/8"	5/8"	5/8"	5/8"	5/8"
4	3/4"	1/4"	3/8"	3/8"	1/4"
5	—	—	—	—	—
6	—	—	—	—	—
7	—	—	—	—	—
8	—	—	—	—	—
9	—	—	—	—	—

DIMENSION "t" N.B. LANE

TABLE OF MOMENTS & REACTIONS - INTERIOR BEAMS

	MOMENTS (FT. KIPS)							REACTIONS (KIPS)				
	4 SP. 1	PIER 1	5 SP. 2	PIER 2	5 SP. 3	PIER 3	4 SP. 4	S. ABUT.	PIER 1	PIER 2	PIER 3	N. ABUT.
DEAD LOAD	47.2	103.5	63.3	114.5	41.2	127.7	83.6	8.9	32.3	33.6	35.7	11.8
LIVE LOAD	144.3	122.9	167.9	137.2	167.9	137.2	182.1	26.3	35.8	36.4	37.0	28.7
IMPACT	43.3	36.9	50.4	41.2	50.4	41.2	54.6	7.9	10.8	10.9	11.1	8.6
TOTAL	234.8	263.3	281.6	292.9	259.5	306.1	320.3	43.1	78.9	80.9	83.8	49.1

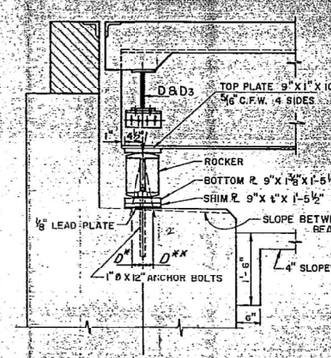

SECTION AT ABUTMENT

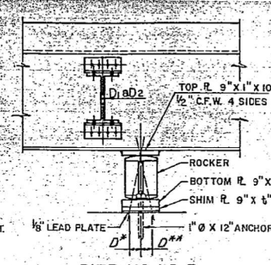

PIER NO. 1 & 3

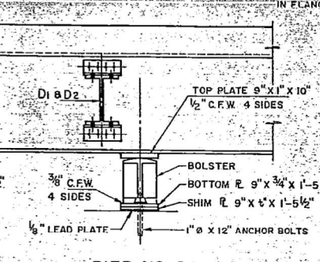

PIER NO. 2

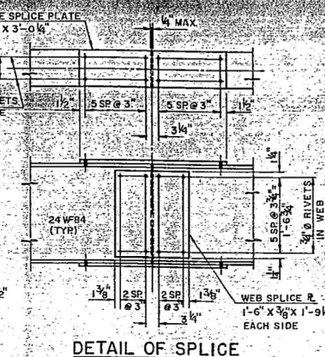

DETAIL OF SPLICE

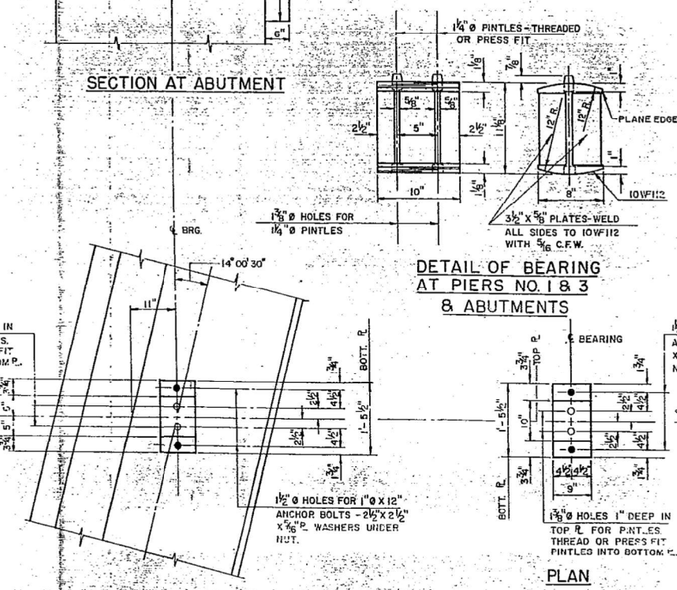

DETAIL OF BEARING AT PIERS NO. 1 & 3 & ABUTMENTS

PLAN

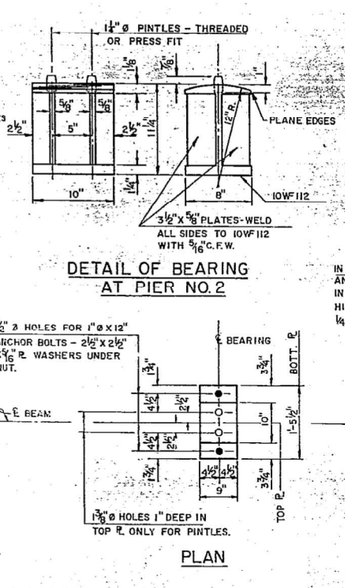

DETAIL OF BEARING AT PIER NO. 2

PLAN

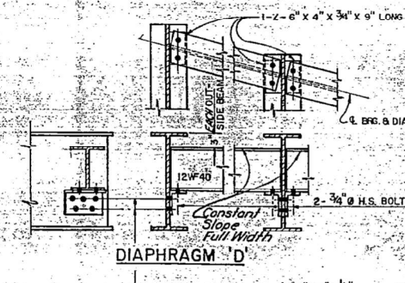

DIAPHRAGM 'D'

IN LIEU OF SHOP RIVETS, ANGLES MAY BE ATTACHED IN THE SHOP WITH 3/4" Ø HIGH STRENGTH BOLTS OR 1/4" C.F.W.

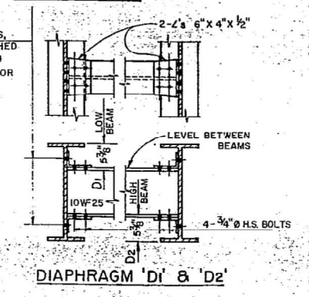

DIAPHRAGM 'D1' & 'D2'

BEAM	℄ BRG. S. ABUT.	℄ PIER NO. 1	℄ SPLICE 'A'	℄ PIER NO. 2	℄ SPLICE 'B'	℄ PIER NO. 3	℄ SPLICE 'C'	℄ BRG. N. ABUT.
1	571.74	572.48	572.67	573.48	573.74	574.47	574.68	575.36
2	571.92	572.63	572.81	573.60	573.84	574.56	574.76	575.42
3	572.11	572.79	572.96	573.72	573.95	574.64	574.84	575.48
4	572.22	572.89	573.06	573.81	574.05	574.74	574.93	575.57
5	572.23	572.91	573.08	573.83	574.07	574.75	574.94	575.58
6	572.18	572.86	573.03	573.78	574.02	574.70	574.90	575.54
7	572.06	572.74	572.91	573.66	573.90	574.58	574.78	575.42
8	571.90	572.58	572.75	573.50	573.74	574.42	574.61	575.26

ELEVATION TOP OF BEAM – SOUTHBOUND STRUCTURE

BEAM	℄ BRG. S. ABUT.	℄ PIER NO. 1	℄ SPLICE 'A'	℄ PIER NO. 2	℄ SPLICE 'B'	℄ PIER NO. 3	℄ SPLICE 'C'	℄ BRG. N. ABUT.
1	571.57	572.24	572.41	573.16	573.40	574.09	574.28	574.92
2	571.66	572.33	572.51	573.26	573.49	574.18	574.37	575.01
3	571.71	572.38	572.56	573.30	573.54	574.23	574.42	575.06
4	571.68	572.36	572.53	573.28	573.52	574.20	574.40	575.04
5	571.60	572.27	572.45	573.19	573.43	574.12	574.31	574.95
6	571.45	572.12	572.30	573.05	573.29	573.97	574.16	574.80
7	571.21	571.90	572.07	572.84	573.09	573.78	573.97	574.62
8	570.94	571.65	571.84	572.63	572.90	573.59	573.79	574.45
9	570.62	571.30	571.50	572.42	572.68	573.44	573.64	574.33

ELEVATION TOP OF BEAM – NORTHBOUND STRUCTURE

NOTES:

THE LOCATION OF THE ANCHOR BOLTS AND VERTICAL ALIGNMENT OF THE EXPANSION BEARINGS SHALL BE ADJUSTED TO THE TEMPERATURE AT THE TIME OF ERECTION. SEE ART. 54.9 (f) OF STANDARD SPECIFICATIONS.

ANCHOR BOLTS SHALL BE GROUTED INTO DRILLED HOLES AFTER BEAMS ARE IN PLACE OR ANCHOR BOLTS AT FIXED PIERS MAY BE BUILT INTO THE MASONRY.

D (Side of brg. away from fixed brg.)*
D = 1/8" per each 100' of expansion for every 15° fall below the normal temp. of 50°F.*
*D** (Side of brg. toward fixed brg.)*
*D** = 1/8" per each 100' of expansion for every 15° rise above the normal temp. of 50°F.*

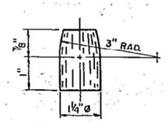

DETAIL OF PINTLE

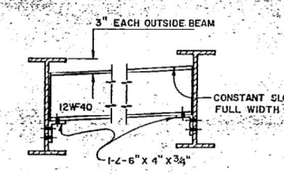

DIAPHRAGM 'D3'

NOTE: WORK THIS SHEET WITH SHEET NO. 5

STRUCTURAL STEEL
F.A.I. 57 - SEC. 41-4HB-2
JEFFERSON COUNTY
STA. 1239 + 78.86

DESIGNED	R.K.	1965
CHECKED	G.P.	EXAMINED — ENGINEER OF BRIDGE & TRAFFIC STRUCTURES
DRAWN	B.H.B.	PASSED
CHECKED	G.P.	APPROVED — ENGINEER OF DESIGN; CHIEF HIGHWAY ENGINEER

MODEL: PLOT
FILE NAME: Y:\JOB011295-11_78550\CADD\Highway\CADD Sheets\0978550-sht-rem-106.dgn

ESCA CONSULTANTS, INC.

USER NAME = skm	DESIGNED - JMK	REVISED -	
ESCA PROJECT NO. 1295.11	DRAWN - JMK	REVISED -	
PLOT SCALE = 0.1667 ' / in.	CHECKED - ELH	REVISED -	
PLOT DATE = 12/23/2020	DATE - 11/20	REVISED -	

STATE OF ILLINOIS
DEPARTMENT OF TRANSPORTATION

SN 041-0014 / 0015 BRIDGE PLANS
FOR INFORMATION ONLY

SCALE: NONE | SHEET NO. 6 OF 15 SHEETS | STA. | TO STA.

F.A.I. RTE.	SECTION	COUNTY	TOTAL SHEETS	SHEET NO.
57	(41-4)B-1;(41-4)B-2	JEFFERSON	257	183
		CONTRACT NO. 78550		
		ILLINOIS	FED. AID PROJECT	

STATE OF ILLINOIS
DEPARTMENT OF PUBLIC WORKS & BUILDING
DIVISION OF HIGHWAYS

ROUTE NO.	SECTION	COUNTY	TOTAL SHEETS	SHEET NO.
FAI 57	*	JEFFERSON	298	83
FED. ROAD DIST. NO. 7	ILLINOIS	FED. AID. PROJECT-		

SHEET NO 7 OF 20 SHEETS

H 41-3A-2, 41-4A & 41-4HB-2

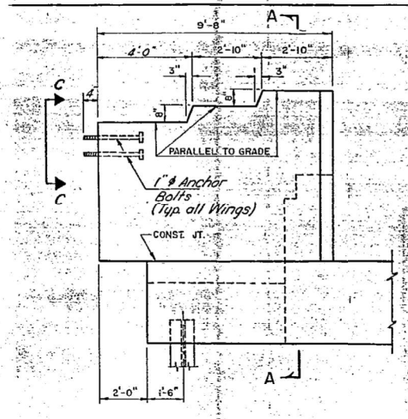

WING WALL ELEVATION
DIMENSIONS

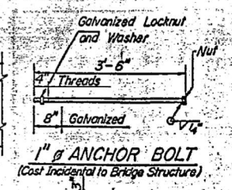

1" ø ANCHOR BOLT
(Cost Incidental to Bridge Structure)

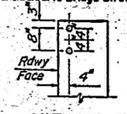

VIEW C-C

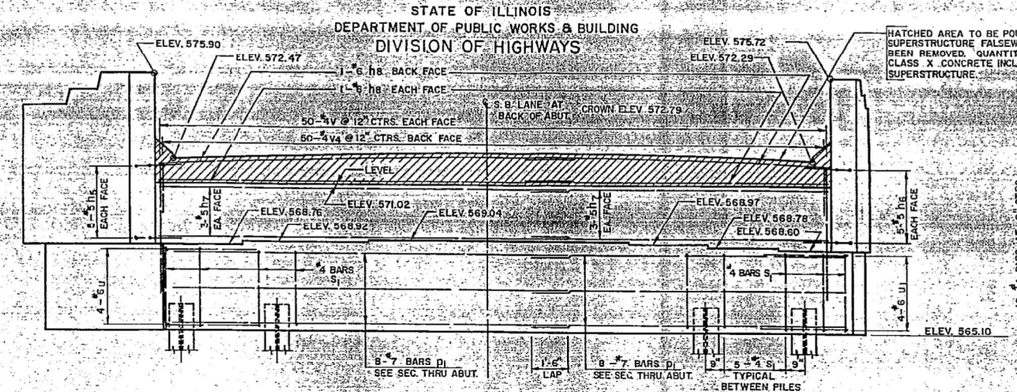

HATCHED AREA TO BE POURED AFTER SUPERSTRUCTURE FALSEWORK HAS BEEN REMOVED. QUANTITY OF CLASS X CONCRETE INCLUDED IN SUPERSTRUCTURE.

ELEVATION

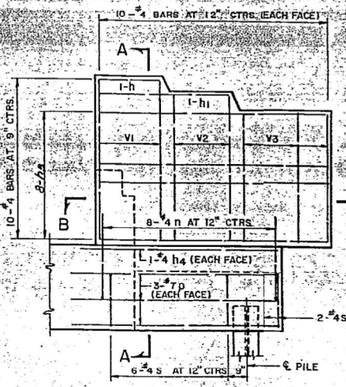

WING WALL ELEVATION
REINFORCEMENT

Note: Forms for encasement may be omitted when soil conditions will permit

NOTE
THE COST OF CLASS 'X' ENCASEMENT AND ENCASEMENT REINFORCEMENT ARE INCIDENTAL TO THE COST OF FURNISHING PILES.

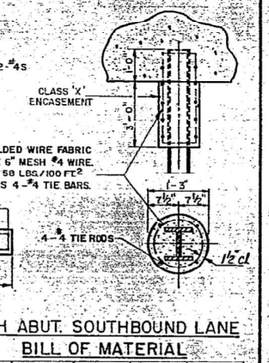

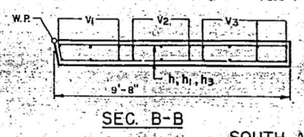

SEC. B-B

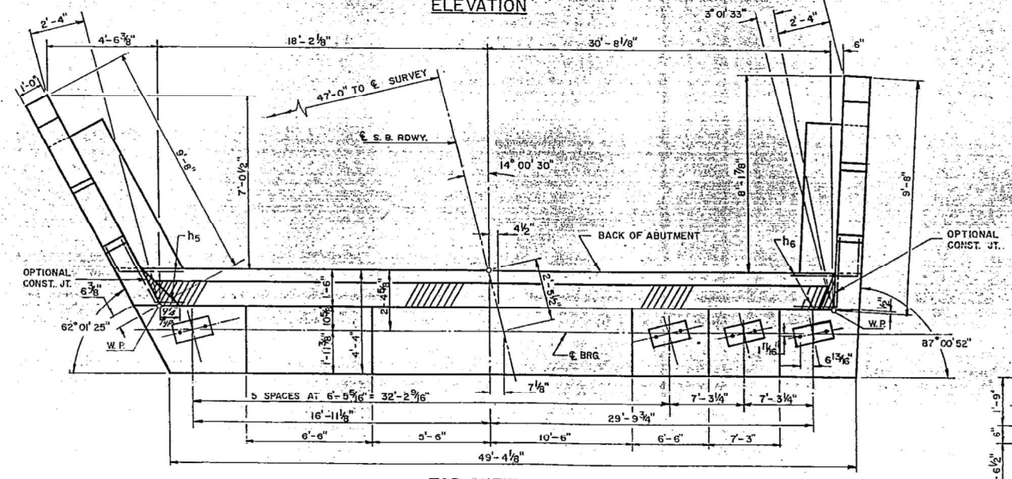

TOP VIEW

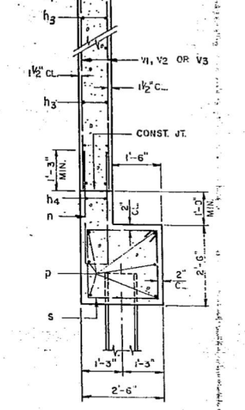

SEC. A-A

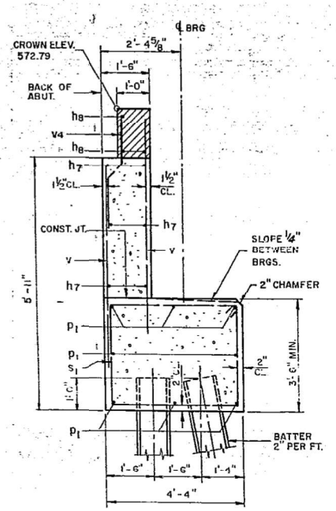

SEC. THRU ABUT

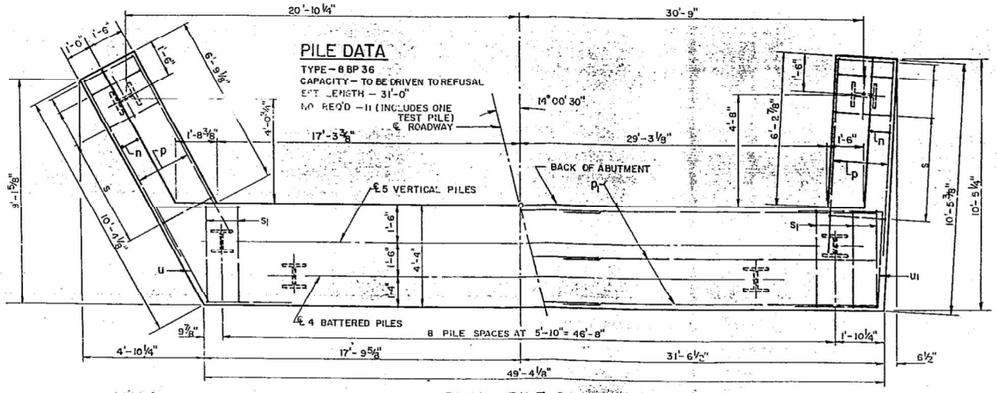

PLAN - PILE CAP

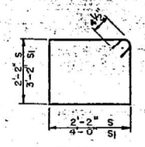

BAR s & s1

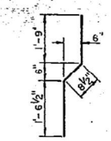

BAR V4

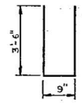

BAR n

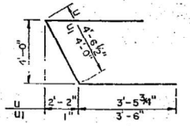

BAR u & u1

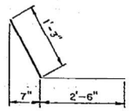

BAR h5

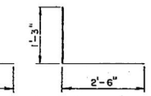

BAR h6

SOUTH ABUT. SOUTHBOUND LANE
BILL OF MATERIAL

BAR	NO.	SIZE	LENGTH	SHAPE
h	4	#4	2'-2"	
h1	4	#4	5'-0"	
h3	32	#4	9'-0"	
h4	4	#4	7'-0"	
h5	10	#5	3'-9"	
h6	10	#5	3'-9"	
h7	12	#5	25'-4"	
h8	6	#6	25'-6"	
n	16	#4	7'-9"	
p	12	#7	8'-3"	
p1	16	#7	25'-3"	
s	16	#4	9'-5"	
s1	43	#4	15'-1"	
u	4	#6	11'-6"	
u1	4	#6	11'-0"	
[illegible]	[illegible]	#4	5'-0"	
V1	12	#4	7'-0"	
V2	12	#4	6'-4"	
V3	16	#4	5'-8"	
V4	50	#4	4'-0"	
CLASS X CONCRETE			CU. YDS.	44.2
REINFORCEMENT BARS			LBS.	3,260
STEEL 'H' PILES		(8BP36)	LIN. FT.	310
TEST PILES		(8BP36)	EA.	1

SOUTH ABUTMENT S.B. LANE
F.A.I. 57 – SEC. 41-4HB-2
JEFFERSON COUNTY
STA. 1239 + 78.86

DESIGNED:	R.K.
CHECKED:	G.P.
DRAWN:	B.H.B.
CHECKED:	G.P.

EXAMINED
ENGINEER OF BRIDGE & TRAFFIC STRUCTURES
PASSED.
ENGINEER OF DESIGN
APPROVED
CHIEF HIGHWAY ENGINEER

MODEL: PLOT
FILE NAME: Y:\IDOT\1295-11_78550\CADD\Highway\CADD Sheets\0978550-sht-rm107.dgn

ESCA CONSULTANTS, INC.

USER NAME = skm	DESIGNED - JMK	REVISED -	
ESCA PROJECT NO. 1295.11	DRAWN - JMK	REVISED -	
PLOT SCALE = 0.1667 ' / in.	CHECKED - ELH	REVISED -	
PLOT DATE = 12/23/2020	DATE - 11/20	REVISED -	

STATE OF ILLINOIS
DEPARTMENT OF TRANSPORTATION

SN 041-0014 / 0015 BRIDGE PLANS
FOR INFORMATION ONLY

SCALE: NONE | SHEET NO. 7 OF 15 SHEETS | STA. | TO STA.

F.A.I. RTE.	SECTION	COUNTY	TOTAL SHEETS	SHEET NO.
57	(41-4)B-1;(41-4)B-2	JEFFERSON	257	184

CONTRACT NO. 78550
ILLINOIS | FED. AID PROJECT

STATE OF ILLINOIS
DEPARTMENT OF PUBLIC WORKS & BUILDING
DIVISION OF HIGHWAYS

ROUTE NO.	SECTION	COUNTY	TOTAL SHEETS	SHEET NO.	SHEET NO. 8
FAI 57	*	JEFFERSON	298	64	20 SHEETS
FED. ROAD DIST. NO. 7		ILLINOIS	FED. AID PROJECT-		

*41-3A-2, 41-4A & 41-4HB-2

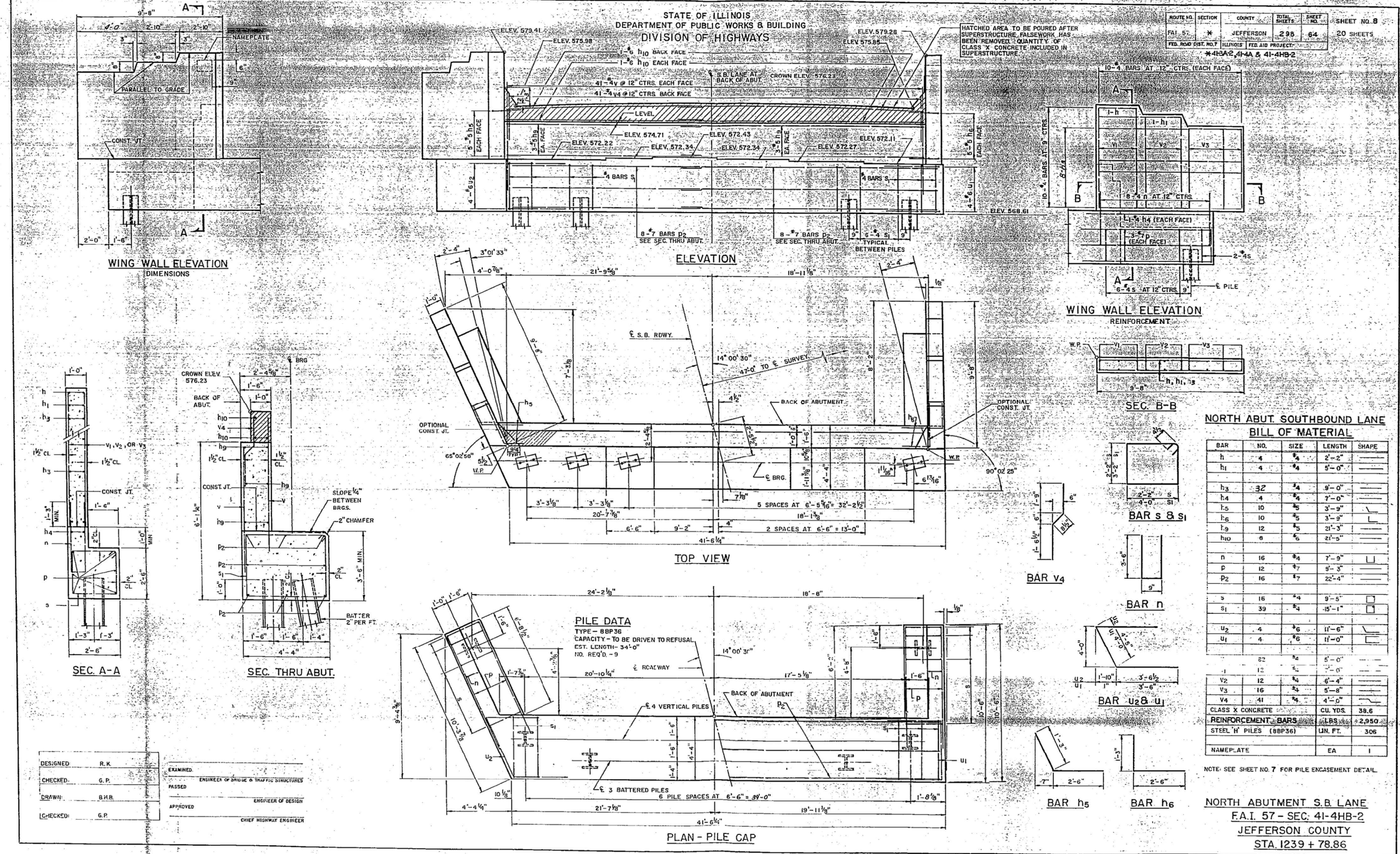

NORTH ABUT. SOUTHBOUND LANE BILL OF MATERIAL

BAR	NO.	SIZE	LENGTH	SHAPE
h	4	#4	2'-2"	
h1	4	#4	5'-0"	
h3	32	#4	9'-0"	
h4	4	#4	7'-0"	
h5	10	#5	3'-9"	
h6	10	#5	3'-9"	
h9	12	#5	21'-3"	
h10	6	#5	21'-5"	
n	16	#4	7'-9"	
p	12	#7	9'-3"	
p2	16	#7	22'-4"	
s	16	#4	9'-5"	
s1	39	#4	15'-1"	
u2	4	#6	11'-6"	
u1	4	#6	11'-0"	
v	82	#4	5'-0"	
v1	12	#4	6'-0"	
v2	12	#4	6'-4"	
v3	16	#4	5'-8"	
v4	41	#4	4'-0"	
CLASS X CONCRETE			CU. YDS.	38.6
REINFORCEMENT BARS			LBS.	2,950
STEEL 'H' PILES (8BP36)			LIN. FT.	306
NAMEPLATE			EA	1

NOTE: SEE SHEET NO. 7 FOR PILE ENCASEMENT DETAIL.

NORTH ABUTMENT S.B. LANE
F.A.I. 57 - SEC. 41-4HB-2
JEFFERSON COUNTY
STA. 1239 + 78.86

DESIGNED	R.K.	EXAMINED	ENGINEER OF BRIDGE & TRAFFIC STRUCTURES
CHECKED	G.P.	PASSED	
DRAWN	B.H.B.	APPROVED	ENGINEER OF DESIGN
CHECKED	G.P.		CHIEF HIGHWAY ENGINEER

MODEL: PLOT
FILE NAME: Y:\D0113295-11_78550\CADD\Highway\CADD Sheets\0978550-sht-rem108.dgn

ESCA CONSULTANTS, INC.

USER NAME = skm	DESIGNED - JMK	REVISED -	
ESCA PROJECT NO. 1295.11	DRAWN - JMK	REVISED -	
PLOT SCALE = 0.1667 ' / in.	CHECKED - ELH	REVISED -	
PLOT DATE = 12/23/2020	DATE - 11/20	REVISED -	

STATE OF ILLINOIS
DEPARTMENT OF TRANSPORTATION

SN 041-0014 / 0015 BRIDGE PLANS
FOR INFORMATION ONLY

SCALE: NONE | SHEET NO. 8 OF 15 SHEETS | STA. | TO STA.

F.A.I. RTE.	SECTION	COUNTY	TOTAL SHEETS	SHEET NO.
57	(41-4)B-1;(41-4)B-2	JEFFERSON	257	185
		CONTRACT NO. 78550		
		ILLINOIS	FED. AID PROJECT	

STATE OF ILLINOIS
DEPARTMENT OF PUBLIC WORKS & BUILDING
DIVISION OF HIGHWAYS

ROUTE NO.	SECTION	COUNTY	TOTAL SHEETS	SHEET NO.
				SHEET NO 9

FED. ROAD DIST. NO. 7 | ILLINOIS | FED. AID PROJECT
X-41-3A-2, 41-4A & 41-4HB-2

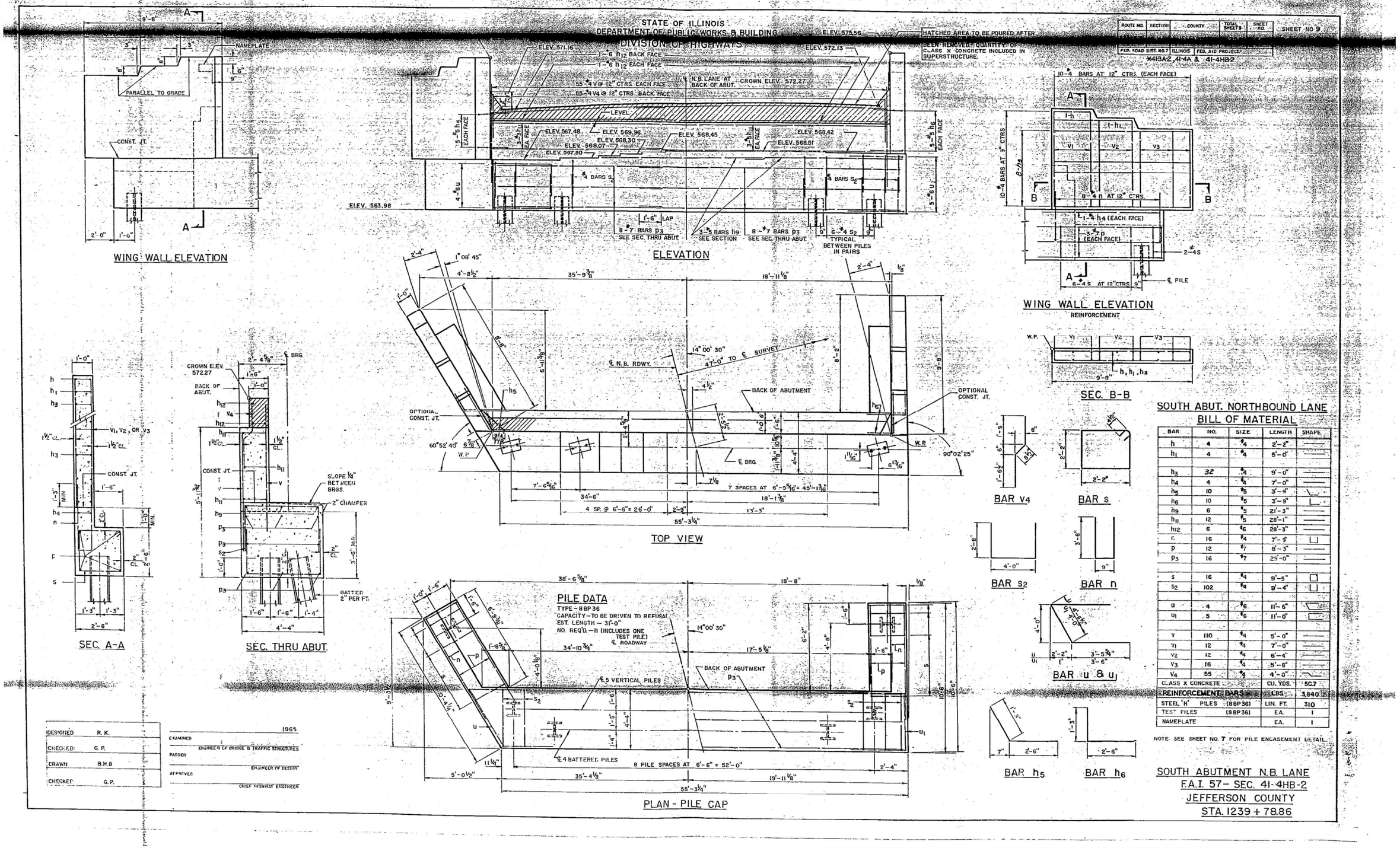

SOUTH ABUT. NORTHBOUND LANE BILL OF MATERIAL

BAR	NO.	SIZE	LENGTH	SHAPE
h	4	#4	2'-2"	
h1	4	#4	5'-0"	
h3	32	#4	9'-0"	
h4	4	#4	7'-0"	
h5	10	#5	3'-9"	
h6	10	#5	3'-9"	
h9	6	#5	21'-3"	
h11	12	#5	28'-1"	
h12	6	#6	28'-3"	
n	16	#4	7'-9"	
p	12	#7	8'-3"	
p3	16	#7	29'-0"	
s	16	#4	9'-5"	
s2	102	#4	9'-4"	
u	4	#6	11'-6"	
u1	5	#6	11'-0"	
v	110	#4	5'-0"	
v1	12	#4	7'-0"	
v2	12	#4	6'-4"	
v3	16	#4	5'-8"	
v4	55	#4	4'-0"	
CLASS X CONCRETE			CU. YDS.	50.7
REINFORCEMENT BARS			LBS.	3,840
STEEL 'H' PILES (8BP36)			LIN. FT.	310
TEST PILES (8BP36)			EA.	1
NAMEPLATE			EA.	1

NOTE: SEE SHEET NO. 7 FOR PILE ENCASEMENT DETAIL.

DESIGNED	R. K.
CHECKED	G. P.
DRAWN	B.H.B
CHECKED	G.P.

EXAMINED 1965
ENGINEER OF BRIDGE & TRAFFIC STRUCTURES
PASSED
ENGINEER OF DESIGN
APPROVED
CHIEF HIGHWAY ENGINEER

SOUTH ABUTMENT N.B. LANE
F.A.I. 57- SEC. 41-4HB-2
JEFFERSON COUNTY
STA. 1239 + 78.86

MODEL: PLOT
FILE NAME: Y:\IDOT\1295-11_78550\CADD\Highway\CADD Sheets\0978550-hr-rem109.dgn

ESCA CONSULTANTS, INC.

USER NAME = skm	DESIGNED - JMK	REVISED -	
ESCA PROJECT NO. 1295.11	DRAWN - JMK	REVISED -	
PLOT SCALE = 0.1667 ' / in.	CHECKED - ELH	REVISED -	
PLOT DATE = 12/23/2020	DATE - 11/20	REVISED -	

STATE OF ILLINOIS
DEPARTMENT OF TRANSPORTATION

SN 041-0014 / 0015 BRIDGE PLANS
FOR INFORMATION ONLY

SCALE: NONE | SHEET NO. 9 OF 15 SHEETS | STA. | TO STA.

F.A.I. RTE.	SECTION	COUNTY	TOTAL SHEETS	SHEET NO.
57	(41-4)B-1;(41-4)B-2	JEFFERSON	257	186

CONTRACT NO. 78550
ILLINOIS | FED. AID PROJECT

STATE OF ILLINOIS
DEPARTMENT OF PUBLIC WORKS & BUILDING
DIVISION OF HIGHWAYS

ROUTE NO.	SECTION	COUNTY	TOTAL SHEETS	SHEET NO.
FAI. 57	*	JEFFERSON	2 98	66
FED. ROAD DIST. NO. 7	ILLINOIS	FED. AID PROJECT		

SHEET NO. 10
20 SHEETS

*41-3A2, 41-4A, & 41-4HB-2

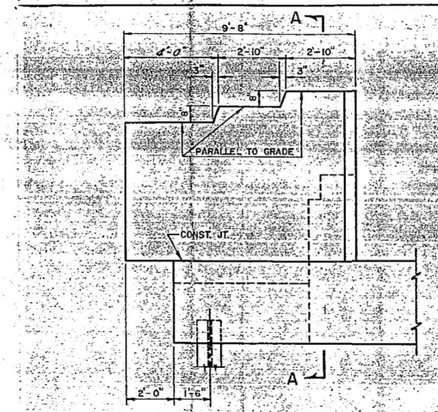

WING WALL ELEVATION
DIMENSIONS

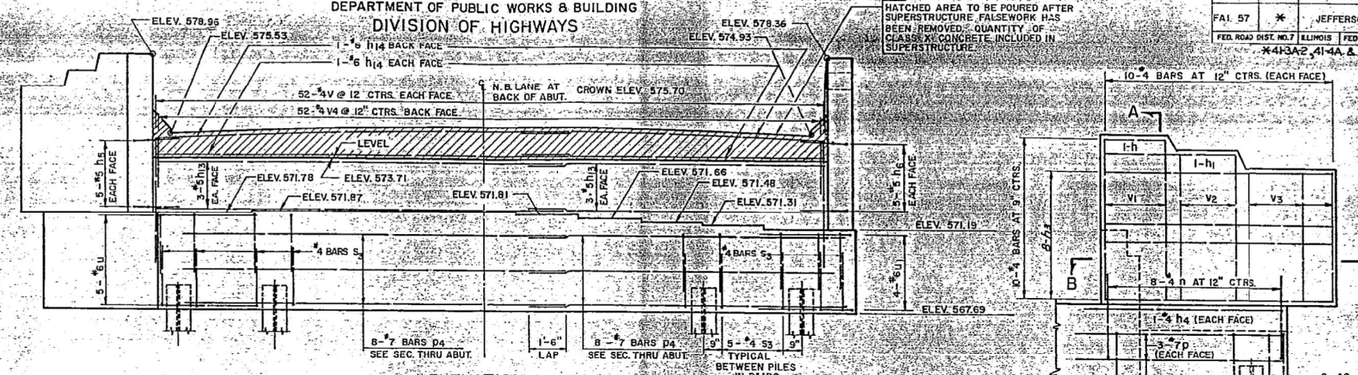

ELEVATION

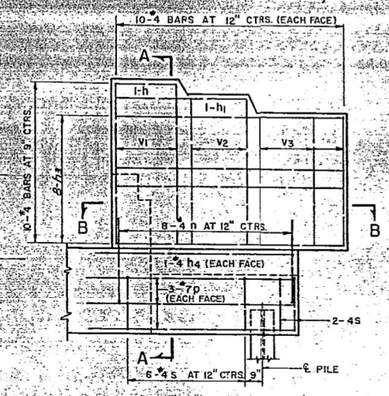

WING WALL ELEVATION
REINFORCEMENT

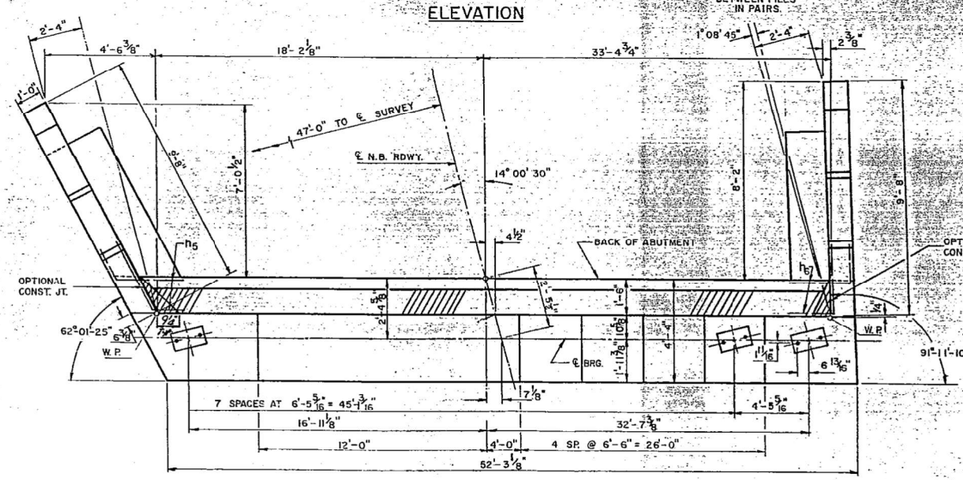

TOP VIEW

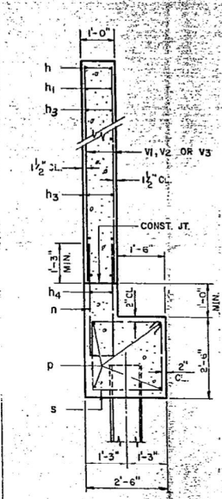

SEC. A-A

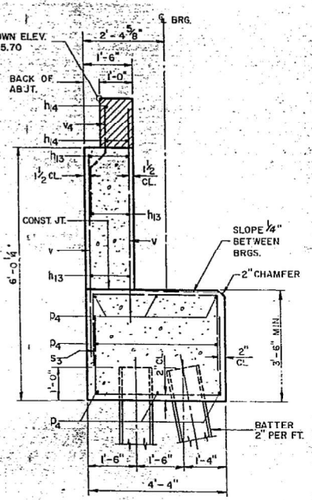

SEC. THRU ABUT.

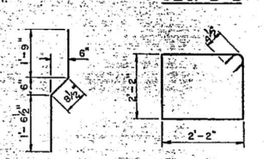

BAR V4 BAR S

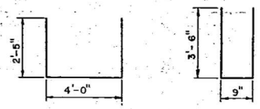

BAR S3 BAR n

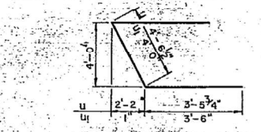

BAR u & u1

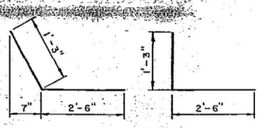

BAR h5 BAR h6

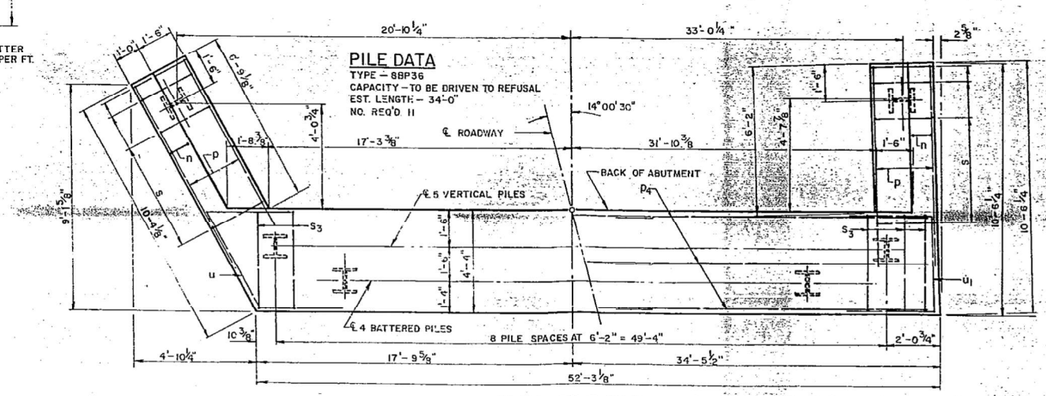

PLAN - PILE CAP

NORTH ABUT. NORTHBOUND LANE
BILL OF MATERIAL

BAR	NO.	SIZE	LENGTH	SHAPE
h	4	#4	2'-2"	
h1	4	#4	5'-0"	
h3	32	#4	9'-0"	
h4	4	#4	7'-0"	
h5	10	#5	3'-9"	
h6	10	#5	3'-9"	
h13	12	#5	26'-0"	
h14	6	#6	26'-2"	
n	16	#4	7'-9"	
p	12	#7	8'-3"	
p4	16	#7	27'-9"	
s	16	#4	9'-5"	
s3	86	#4	8'-10"	
u	5	#6	11'-6"	
u1	4	#6	11'-0"	
v	104	#4	5'-0"	
v1	12	#4	7'-0"	
v2	12	#4	6'-4"	
v3	16	#4	5'-8"	
v4	52	#4	4'-0"	
CLASS X CONCRETE			CU. YDS.	47.7
REINFORCEMENT BARS			LBS.	3,460
STEEL 'H' PILES (8BP36)			LIN. FT.	374

NOTE: SEE SHEET NO. 7 FOR PILE ENCASEMENT DETAIL.

DESIGNED:	R.K.
CHECKED:	G.P.
DRAWN:	B.H.B.
CHECKED:	G.P.

EXAMINED
ENGINEER OF BRIDGE & TRAFFIC STRUCTURES
PASSED
ENGINEER OF DESIGN
APPROVED
CHIEF HIGHWAY ENGINEER

NORTH ABUTMENT N.B. LANE
F.A.I. 57 – SEC. 41-4HB-2
JEFFERSON COUNTY
STA. 1239 + 78.86

MODEL: PLOT
FILE NAME: Y:\D0011295-11_78550\CADD\Highway\CADD Sheets\0978550-sht-em110.dgn

ESCA CONSULTANTS, INC.

USER NAME = skm	DESIGNED - JMK	REVISED -	
ESCA PROJECT NO. 1295.11	DRAWN - JMK	REVISED -	
PLOT SCALE = 0.1667 ' / in.	CHECKED - ELH	REVISED -	
PLOT DATE = 12/23/2020	DATE - 11/20	REVISED -	

STATE OF ILLINOIS
DEPARTMENT OF TRANSPORTATION

SN 041-0014 / 0015 BRIDGE PLANS
FOR INFORMATION ONLY

SCALE: NONE | SHEET NO. 10 OF 15 SHEETS | STA. | TO STA.

F.A.I. RTE.	SECTION	COUNTY	TOTAL SHEETS	SHEET NO.
57	(41-4)B-1;(41-4)B-2	JEFFERSON	257	187

CONTRACT NO. 78550
ILLINOIS | FED. AID PROJECT

STATE OF ILLINOIS
DEPARTMENT OF PUBLIC WORKS & BUILDINGS
DIVISION OF HIGHWAYS

ROUTE NO.	SECTION	COUNTY	TOTAL SHEETS	SHEET NO.
FAI 57	*	JEFFERSON	298	67
FED. ROAD DIST. NO. 7		ILLINOIS	FED. AID PROJECT	

NO. 11 of 20

*41B A2, 41-4A, & 41-4HB2

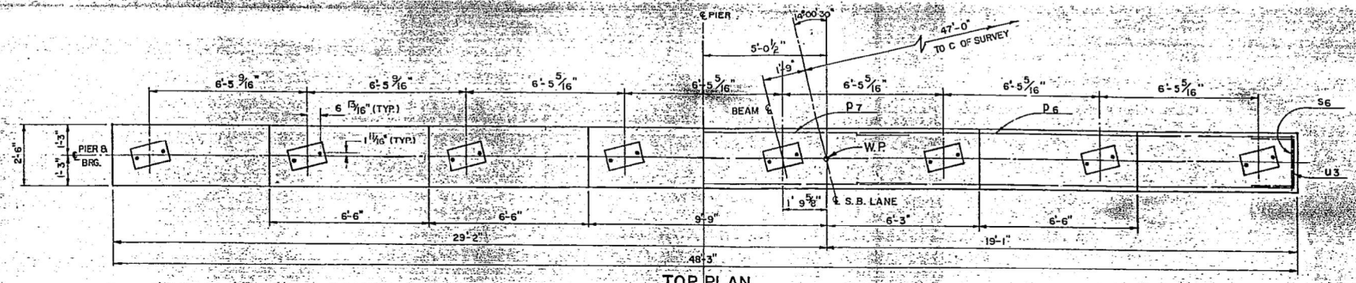

TOP PLAN

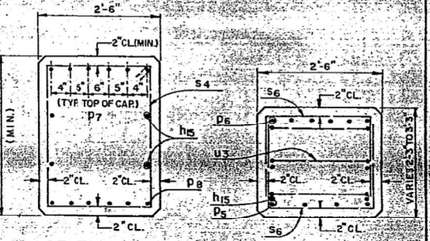

SECTION A-A

SECTION C-C

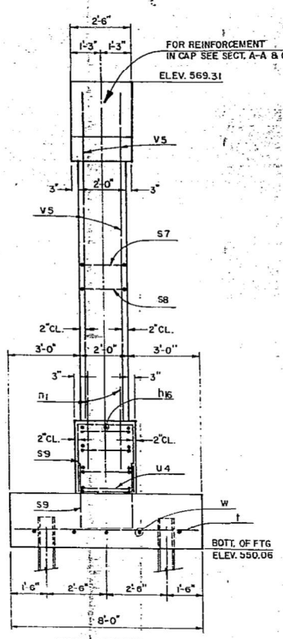

END VIEW

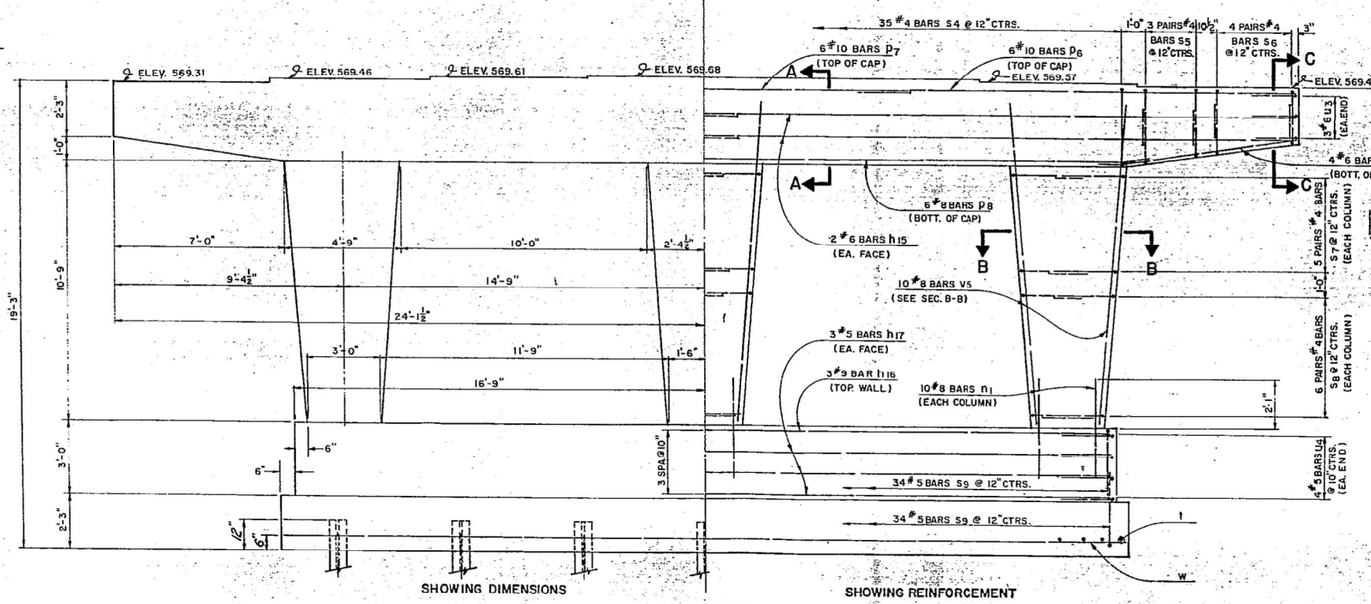

ELEVATION

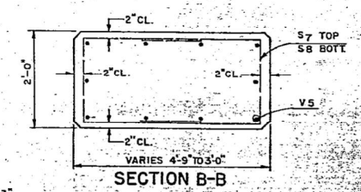

SECTION B-B

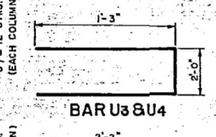

BAR U3 & U4

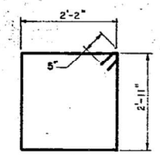

BAR S4

BARS S5, S6, S7, S8, S9

BAR	A	B
S5	2'-2"	2'-0"
S6	2'-2"	1'-0"
S7	1'-8"	2'-10"
S8	1'-8"	2'-4"
S9	2'-2"	2'-10"

BILL OF MATERIALS

BAR	NO.	SIZE	LENGTH	SHAPE
h15	8	#6	24'-7"	
h16	3	#9	33'-2"	
h17	6	#5	33'-2"	
n1	30	#8	4'-7"	
P5	8	#6	7'-6"	
P6	12	#10	17'-8"	
P7	6	#10	16'-11"	
P8	6	#8	35'-0"	
S4	35	#4	11'-0"	
S5	12	#4	6'-2"	
S6	16	#4	5'-10"	
S7	30	#4	7'-4"	
S8	36	#4	6'-4"	
S9	68	#5	7'-10"	
1	42	#6	7'-8"	
U3	6	#6	4'-6"	
U4	8	#5	4'-6"	
V5	30	#8	13'-9"	
W	8	#9	34'-2"	

ITEM	UNIT	QUANTITY
CLASS X CONCRETE	CU. YDS.	565
REINFORCEMENT BARS	LBS.	6,680
STEEL PILES (8 BP 36)	LIN. FT.	196

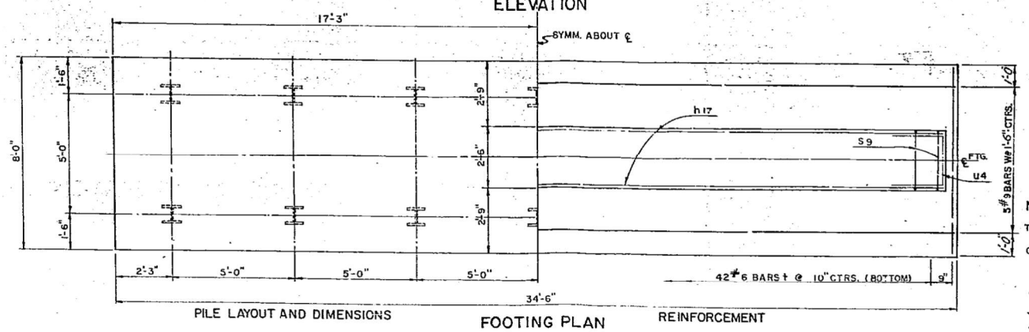

PILE LAYOUT AND DIMENSIONS

FOOTING PLAN

REINFORCEMENT

PILE DATA

TYPE - STEEL PILES (8 BP 36)
EST. LENGTH 14'
NO. REQ. 14
CAPACITY 47.7 TONS

NOTES:

SPACE REINFORCEMENT IN CAP TO MISS ANCHOR BOLTS.

MIN. BAR LAPS = 20 DIA. UNLESS OTHERWISE NOTED.

ALL EDGES SHALL HAVE STANDARD ¾" CHAMFERS EXCEPT AS NOTED.

POUR STEPS MONOLITHICALLY WITH CAP.

Space reinforcement bars in footings to miss piles. (Typ. for all piers.)

DESIGNED	R.K.
CHECKED	G.P.
DRAWN	J.E.
CHECKED	G.P.

19
EXAMINED
ENGINEER OF BRIDGE AND TRAFFIC STRUCTURES
PASSED
ENGINEER OF DESIGN
APPROVED
CHIEF HIGHWAY ENGINEER

PIER NO. 1 S.B. LANE
F.A.I. 57-SEC. 41-4HB-2
JEFFERSON COUNTY
STA. 1239+78.86

ESCA CONSULTANTS, INC.

USER NAME = skm	DESIGNED - JMK	REVISED -	
ESCA PROJECT NO. 1295.11	DRAWN - JMK	REVISED -	
PLOT SCALE = 0.1667 ' / in.	CHECKED - ELH	REVISED -	
PLOT DATE = 12/23/2020	DATE - 11/20	REVISED -	

STATE OF ILLINOIS
DEPARTMENT OF TRANSPORTATION

SN 041-0014 / 0015 BRIDGE PLANS
FOR INFORMATION ONLY

SCALE: NONE | SHEET NO. 11 OF 15 SHEETS | STA. | TO STA.

F.A.I. RTE.	SECTION	COUNTY	TOTAL SHEETS	SHEET NO.
57	(41-4)B-1;(41-4)B-2	JEFFERSON	257	188

CONTRACT NO. 78550
ILLINOIS | FED. AID PROJECT

MODEL: PLOT
FILE NAME: Y:\IDOT\1295-11_78550\CADD\Highway\CADD Sheets\0978550-hr-rm311.dgn

STATE OF ILLINOIS
DEPARTMENT OF PUBLIC WORKS & BUILDINGS
DIVISION OF HIGHWAYS

ROUTE NO.	SECTION	COUNTY	TOTAL SHEETS	SHEET NO.
F.A.I. 57	*	JEFFERSON	298	68
FED. ROAD DIST. NO. 7		ILLINOIS	FED. AID PROJECT	

12
13
15

*-H3A2, 41-4A & 41-4HB-2

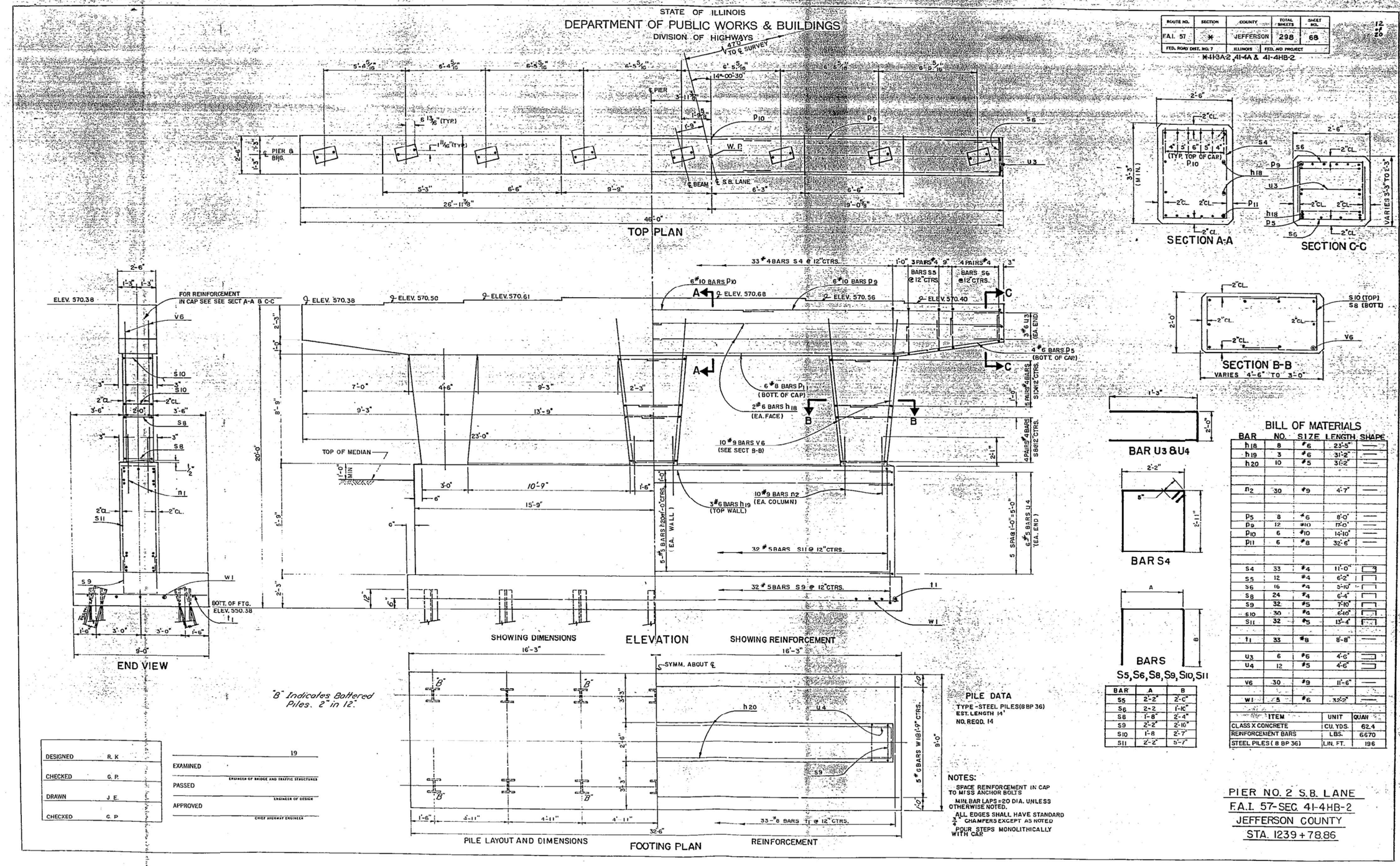

BAR	A	B
S5	2'-2"	2'-0"
S6	2-2	1'-10"
S8	1'-8"	2'-4"
S9	2'-2"	2'-10"
S10	1'-8	2'-7"
S11	2'-2"	5'-7"

BILL OF MATERIALS

BAR	NO.	SIZE	LENGTH	SHAPE
h18	8	#6	23'-5"	
h19	3	#6	31'-2"	
h20	10	#5	31'-2"	
n2	30	#9	4'-7"	
p5	8	#6	8'-0"	
p9	12	#10	17'-0"	
p10	6	#10	14'-10"	
p11	6	#8	32'-6"	
S4	33	#4	11'-0"	
S5	12	#4	6'-2"	
S6	16	#4	5'-10"	
S8	24	#4	6'-4"	
S9	32	#5	7'-10"	
S10	30	#4	6'-10"	
S11	32	#5	13'-4"	
t1	33	#8	8'-8"	
U3	6	#6	4'-6"	
U4	12	#5	4'-6"	
V6	30	#9	11'-6"	
W1	5	#6	32'-2"	

ITEM	UNIT	QUAN
CLASS X CONCRETE	CU. YDS.	62.4
REINFORCEMENT BARS	LBS.	6670
STEEL PILES (8 BP 36)	LIN. FT.	196

PILE DATA

TYPE - STEEL PILES (8 BP 36)
EST. LENGTH 14'
NO. REQD. 14

NOTES:

SPACE REINFORCEMENT IN CAP TO MISS ANCHOR BOLTS

MIN. BAR LAPS = 30 DIA. UNLESS OTHERWISE NOTED.

ALL EDGES SHALL HAVE STANDARD $\frac{3}{4}$" CHAMFERS EXCEPT AS NOTED

POUR STEPS MONOLITHICALLY WITH CAP

PIER NO. 2 S.B. LANE
F.A.I. 57-SEC. 41-4HB-2
JEFFERSON COUNTY
STA. 1239 + 78.86

DESIGNED	R. K		
CHECKED	G. P.		
DRAWN	J. E.		
CHECKED	G. P.		

19
EXAMINED
ENGINEER OF BRIDGE AND TRAFFIC STRUCTURES
PASSED
ENGINEER OF DESIGN
APPROVED
CHIEF HIGHWAY ENGINEER

MODEL: PLOT
FILE NAME: Y:\DOT\1295-11_78550\CADD\Highway\CADD Sheets\0978550-sht-rem112.dgn

ESCA CONSULTANTS, INC.

USER NAME = skm	DESIGNED - JMK	REVISED -	
ESCA PROJECT NO. 1295.11	DRAWN - JMK	REVISED -	
PLOT SCALE = 0.1667 ' / in.	CHECKED - ELH	REVISED -	
PLOT DATE = 12/23/2020	DATE - 11/20	REVISED -	

STATE OF ILLINOIS
DEPARTMENT OF TRANSPORTATION

SN 041-0014 / 0015 BRIDGE PLANS
FOR INFORMATION ONLY

SCALE: NONE | SHEET NO. 12 OF 15 SHEETS | STA. | TO STA.

F.A.I. RTE.	SECTION	COUNTY	TOTAL SHEETS	SHEET NO.
57	(41-4)B-1;(41-4)B-2	JEFFERSON	257	189

CONTRACT NO. 78550
ILLINOIS | FED. AID PROJECT

STATE OF ILLINOIS
DEPARTMENT OF PUBLIC WORKS & BUILDINGS
DIVISION OF HIGHWAYS

ROUTE NO.	SECTION	COUNTY	TOTAL SHEETS	SHEET NO.
F.A.I. 57	*	JEFFERSON	298	69
FED. ROAD DIST. NO. 7		ILLINOIS	FED. AID PROJECT	

*41-3A-2, 41-4A-3 & 41-4HB-2

13 of 20

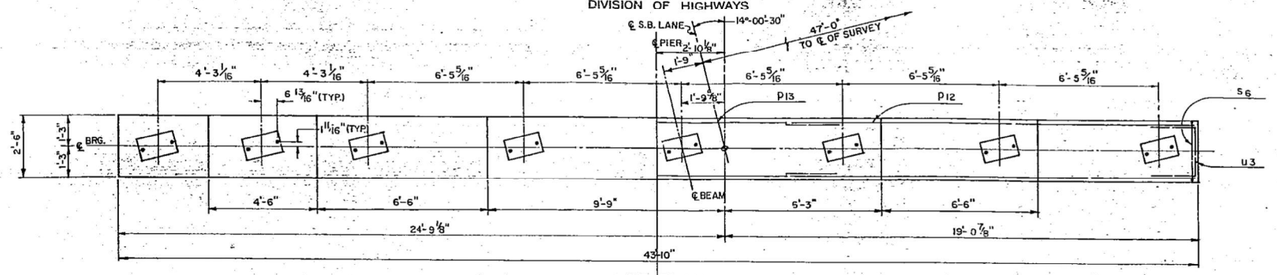

TOP PLAN

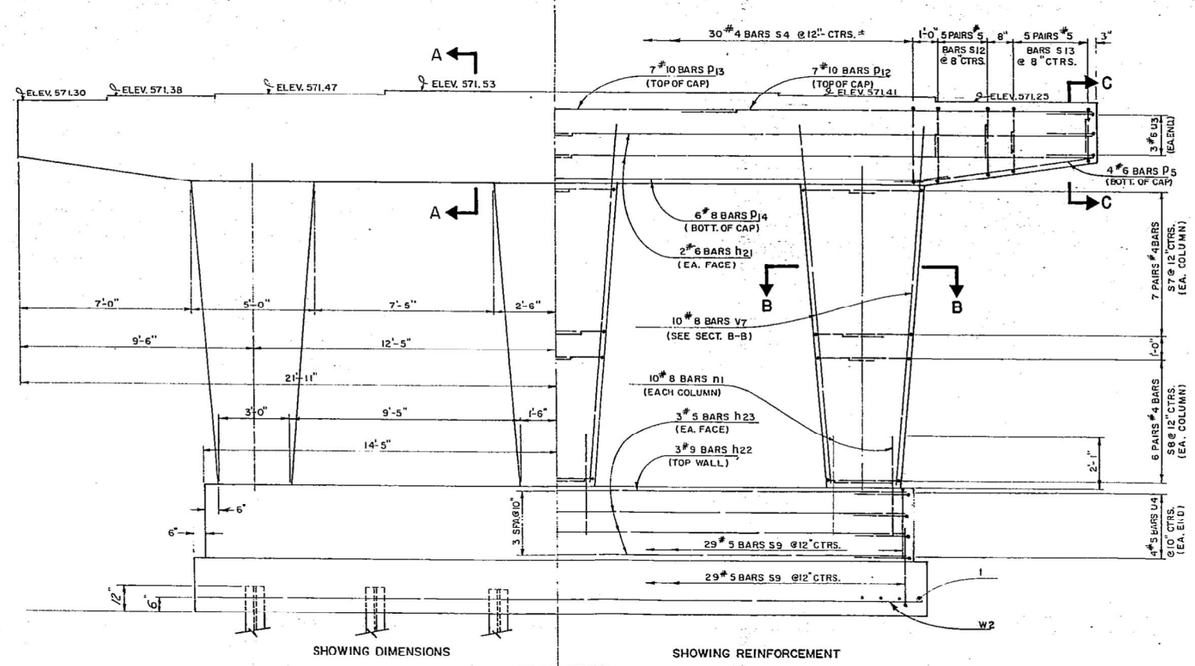

ELEVATION

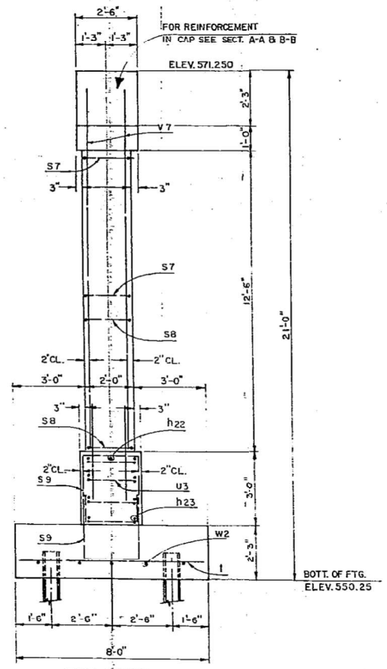

END VIEW

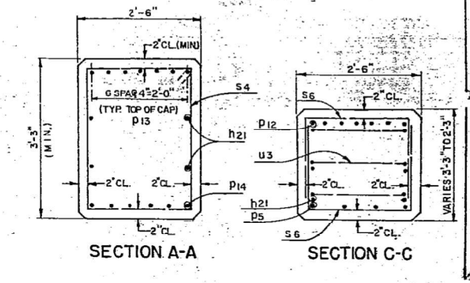

SECTION A-A

SECTION C-C

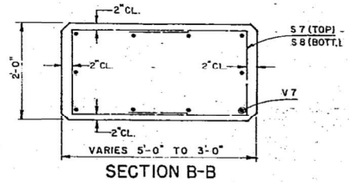

SECTION B-B

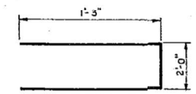

BAR U3 & U4

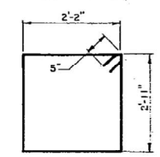

BAR S4

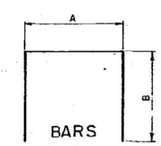

BARS S7, S8, S9, S12, S13

BAR	A	B
S7	1'-8"	2'-10"
S8	1'-8"	2'-4"
S9	2'-2"	2'-10"
S12	2'-2"	2'-3"
S13	2'-2"	2'-0"

BILL OF MATERIALS

BAR	NO.	SIZE	LENGTH	SHAPE
h21	8	#6	22'-5"	—
h22	3	#9	28'-6"	—
h23	6	#5	28'-6"	—
n1	30	#8	4'-7"	—
P5	8	#6	7'-6"	—
P12	14	#10	16'-7"	—
P13	7	#10	14'-6"	—
P14	6	#8	30'-6"	—
S4	30	#4	11'-0"	
S7	42	#4	7'-4"	
S8	36	#4	6'-4"	
S9	58	#5	7'-10"	
S12	20	#5	6'-8"	
S13	20	#5	6'-2"	
1	40	#6	7'-8"	—
U3	6	#6	4'-6"	
U4	8	#5	4'-6"	
V7	30	#8	15'-6"	—
W2	5	#9	29'-6"	—
	ITEM		UNIT	QUANTITY
CLASS X CONCRETE			CU. YDS.	52.2
REINFORCEMENT BARS			LBS.	6,720
STEEL PILES (8 BP 36)			LIN. FT.	154
TEST PILES (STEEL)			EACH	1

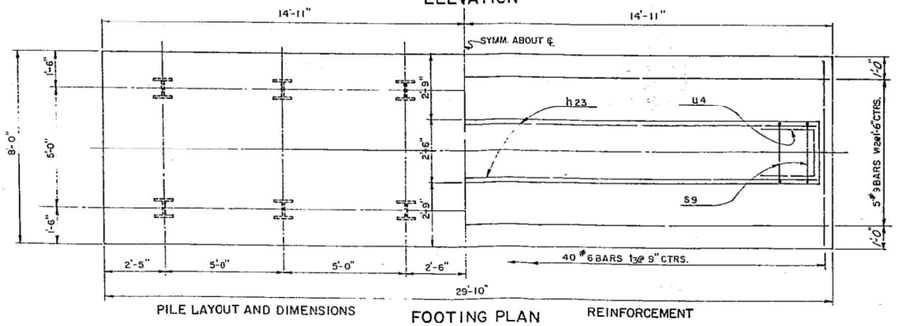

PILE LAYOUT AND DIMENSIONS

FOOTING PLAN

REINFORCEMENT

PILE DATA

TYPE - STEEL (8 BP 36)
EST. LENGTH 14'
NO. REQ'D. 11
TEST PILES 1
CAPACITY 47.7 TONS

NOTES:

SPACE REINFORCEMENT IN CAP TO MISS ANCHOR BOLTS.

MIN. BAR LAPS 20 DIA. UNLESS OTHERWISE NOTED

ALL EDGES SHALL HAVE STANDARD 3/4" CHAMFERS EXCEPT AS NOTED.

POUR STEPS MONOLITHICALLY WITH CAP

DESIGNED	R. K.	
CHECKED	G. P.	
DRAWN	J. E.	
CHECKED	G. P.	

19

EXAMINED — ENGINEER OF BRIDGE AND TRAFFIC STRUCTURES

PASSED — ENGINEER OF DESIGN

APPROVED — CHIEF HIGHWAY ENGINEER

PIER NO. 3 S.B. LANE
F.A.I. 57-SEC. 41-4HB-2
JEFFERSON COUNTY
STA. 1239+78.86

MODEL: PLOT
FILE NAME: Y:\DOT\1129-11_78550\CADD\Highway\CADD Sheets\09785S0-sht-rem113.dgn

ESCA CONSULTANTS, INC.

USER NAME = skm	DESIGNED - JMK	REVISED -	
ESCA PROJECT NO. 1295.11	DRAWN - JMK	REVISED -	
PLOT SCALE = 0.1667 ' / in.	CHECKED - ELH	REVISED -	
PLOT DATE = 12/23/2020	DATE - 11/20	REVISED -	

STATE OF ILLINOIS
DEPARTMENT OF TRANSPORTATION

SN 041-0014 / 0015 BRIDGE PLANS
FOR INFORMATION ONLY

SCALE: NONE | SHEET NO. 13 OF 15 SHEETS | STA. | TO STA.

F.A.I. RTE.	SECTION	COUNTY	TOTAL SHEETS	SHEET NO.
57	(41-4)B-1;(41-4)B-2	JEFFERSON	257	190

CONTRACT NO. 78550

ILLINOIS | FED. AID PROJECT

STATE OF ILLINOIS
DEPARTMENT OF PUBLIC WORKS & BUILDINGS
DIVISION OF HIGHWAYS

ROUTE NO.	SECTION	COUNTY	TOTAL SHEETS	SHEET NO.
F.A.I. 57	*	JEFFERSON	298	70
FED. ROAD DIST. NO. 7		ILLINOIS	FED. AID PROJECT	

*41-3A-2, 41-4A & 41-4HB-2

14
25
20

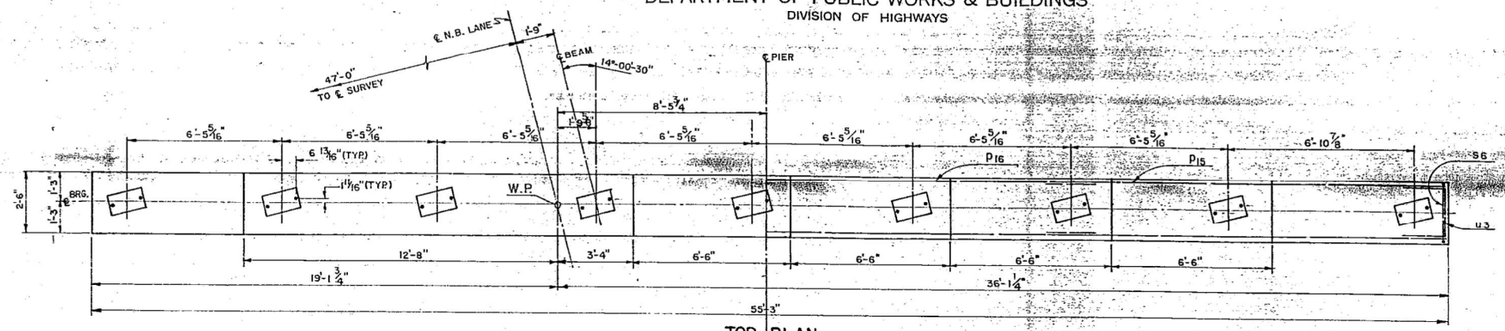

TOP PLAN

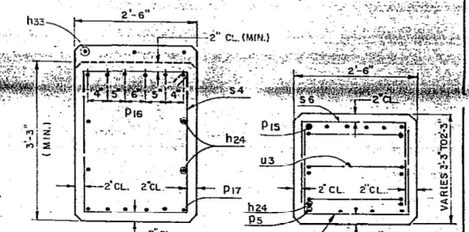

SECTION A-A

SECTION C-C

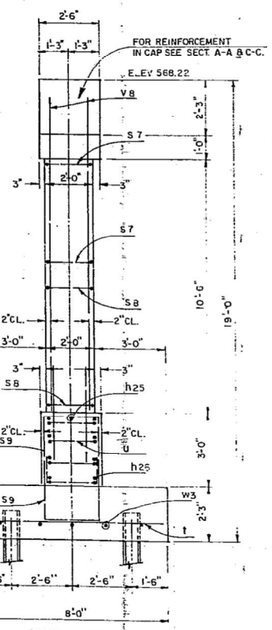

END VIEW

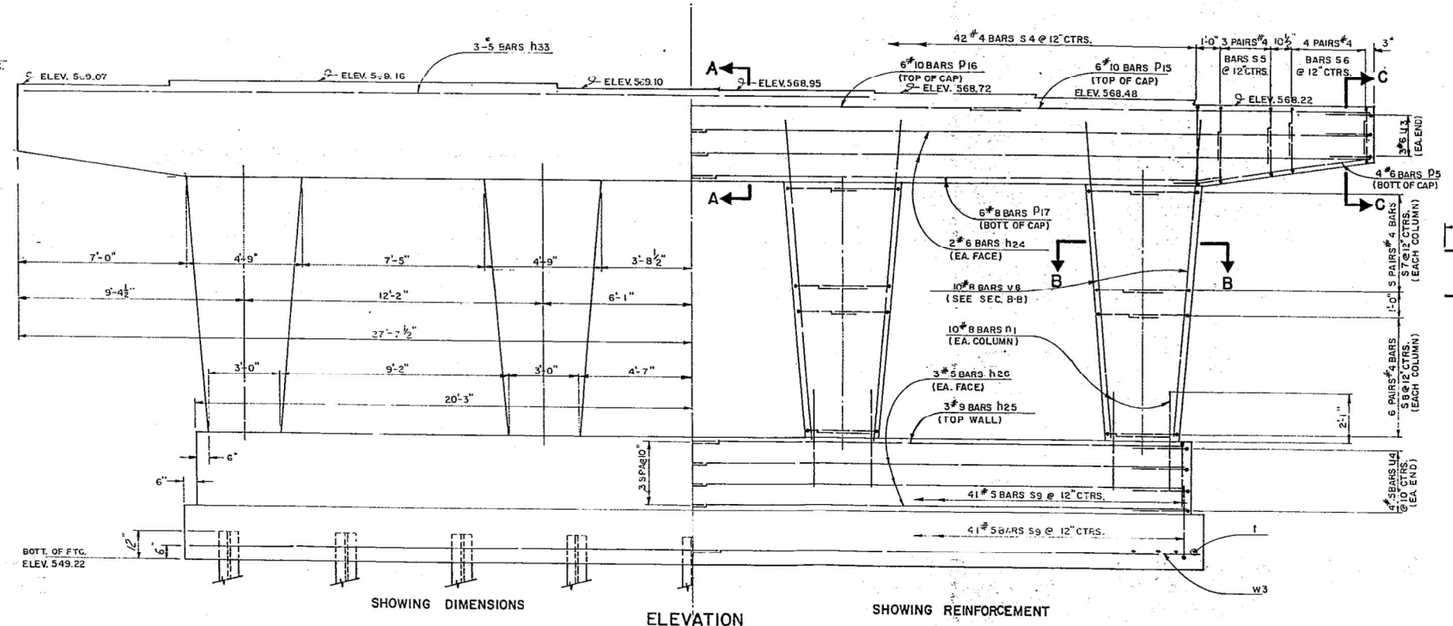

SHOWING DIMENSIONS

ELEVATION

SHOWING REINFORCEMENT

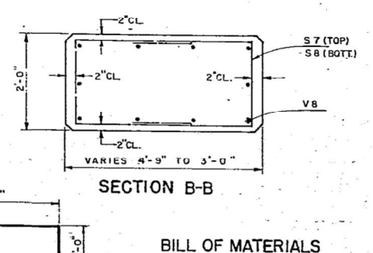

SECTION B-B

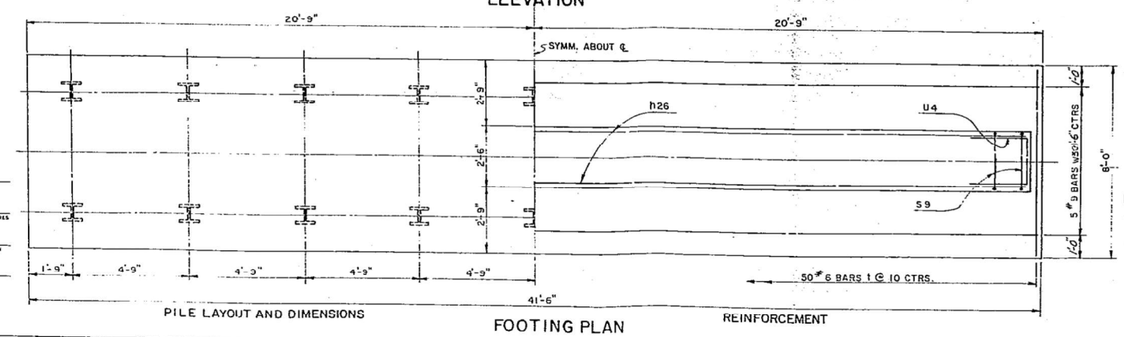

PILE LAYOUT AND DIMENSIONS

FOOTING PLAN

REINFORCEMENT

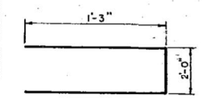

BAR U3 & U4

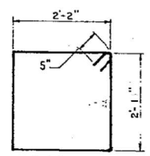

BAR S4

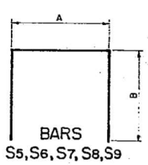

BARS S5, S6, S7, S8, S9

BAR	A	B
S5	2'-2"	2'-0"
S6	2'-2"	1'-10"
S7	1'-8"	2'-0"
S8	1'-8"	2'-4"
S9	2'-2"	2'-10"

BILL OF MATERIALS

BAR	NO.	SIZE	LENGTH	SHAPE
h24	8	#6	28'-2"	—
h25	6	#9	21'-2"	—
h26	12	#5	20'-8"	—
h33	3	#5	35'-2"	—
n1	40	#8	4'-7"	—
P5	8	#6	8'-0"	—
P15	12	#10	10'-4"	—
P16	6	#10	26'-5"	—
P17	12	#8	22'-3"	—
S4	42	#4	11'-0"	
S5	12	#4	6'-2"	
S6	16	#4	5'-10"	
S7	40	#4	[illegible]	
S8	48	#4	6'-[illegible]	
S9	82	#5	7'-10"	
t	50	#6	7'-8"	—
U3	6	#6	4'-6"	
U4	8	#5	4'-6"	
V8	40	#8	13'-5"	—
W3	10	#9	21'-7"	—

ITEM	UNIT	QUANTITY
CLASS X CONCRETE	CU. YDS.	70.3
REINFORCEMENT BARS	LBS.	8,220
STEEL PILES (8 BP 36)	LIN. FT.	252

PILE DATA
TYPE - STEEL PILES (8 BP 36)
EST. LENGTH 14'
NO. REQ'D. 18

NOTES:
SPACE REINFORCEMENT IN CAP TO MISS ANCHOR BOLTS.
MIN. BAR LAPS = 20 DIA. UNLESS OTHERWISE NOTED.
ALL EDGES SHALL HAVE STANDARD 3/4" CHAMFERS EXCEPT AS NOTED.
POUR STEPS MONOLITHICALLY WITH CAP

DESIGNED	R.K.	
CHECKED	G.P.	
DRAWN	J.E.	
CHECKED	G.P.	

19
EXAMINED — ENGINEER OF BRIDGE AND TRAFFIC STRUCTURES
PASSED — ENGINEER OF DESIGN
APPROVED — CHIEF HIGHWAY ENGINEER

PIER NO. 1 N.B. LANE
F.A.I. 57-SEC. 41-4HB-2
JEFFERSON COUNTY
STA. 1239+78.86

MODEL: PLOT
FILE NAME: Y:\IDOT\1295-11_78550\CADD\Highway\CADD Sheets\0978550-sht-rm114.dgn

ESCA CONSULTANTS, INC.

USER NAME = skm	DESIGNED - JMK	REVISED -	
ESCA PROJECT NO. 1295.11	DRAWN - JMK	REVISED -	
PLOT SCALE = 0.1667 ' / in.	CHECKED - ELH	REVISED -	
PLOT DATE = 12/23/2020	DATE - 11/20	REVISED -	

STATE OF ILLINOIS
DEPARTMENT OF TRANSPORTATION

SN 041-0014 / 0015 BRIDGE PLANS
FOR INFORMATION ONLY

SCALE: NONE | SHEET NO. 14 OF 15 SHEETS | STA. | TO STA.

F.A.I. RTE.	SECTION	COUNTY	TOTAL SHEETS	SHEET NO.
57	(41-4)B-1;(41-4)B-2	JEFFERSON	257	191

CONTRACT NO. 78550
ILLINOIS | FED. AID PROJECT

STATE OF ILLINOIS
DEPARTMENT OF PUBLIC WORKS & BUILDINGS
DIVISION OF HIGHWAYS

ROUTE NO.	SECTION	COUNTY	TOTAL SHEETS	SHEET NO.
F.A.I. 57	*	JEFFERSON	298	71
FED. ROAD DIST. NO. 7		ILLINOIS	FED. AID PROJECT	

*41-3A-2, 41-4A & 41-4HB-2

15 of 30

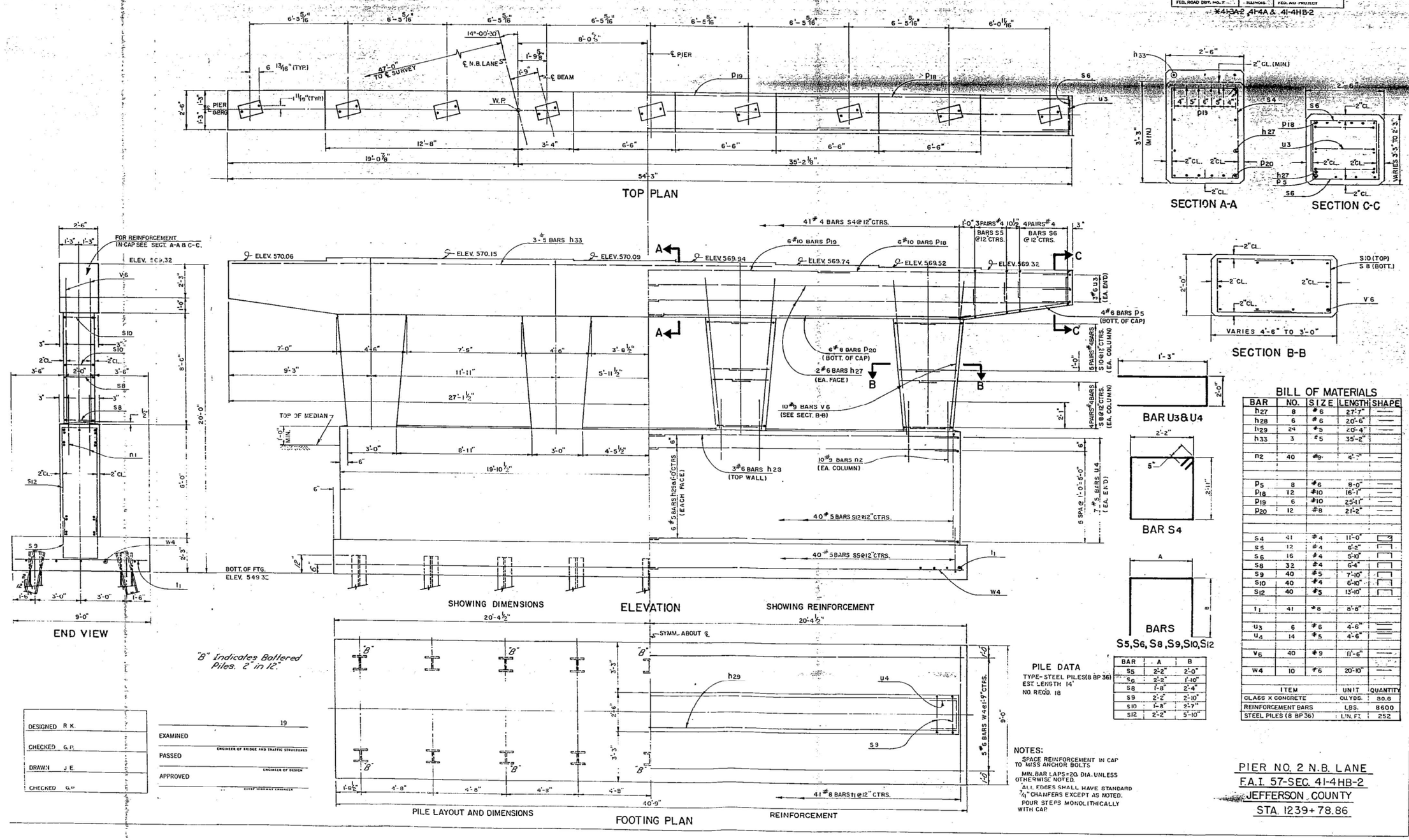

BILL OF MATERIALS

BAR	NO.	SIZE	LENGTH	SHAPE
h27	8	#6	27'-7"	
h28	6	#6	20'-6"	
h29	24	#5	20'-4"	
h33	3	#5	35'-2"	
n2	40	#9	4'-7"	
p5	8	#6	8'-0"	
p18	12	#10	16'-1"	
p19	6	#10	25'-11"	
p20	12	#8	21'-2"	
s4	41	#4	11'-0"	
s5	12	#4	6'-2"	
s6	16	#4	5'-10"	
s8	32	#4	6'-4"	
s9	40	#5	7'-10"	
s10	40	#4	6'-10"	
s12	40	#5	13'-10"	
t1	41	#8	8'-8"	
u3	6	#6	4'-6"	
u4	14	#5	4'-6"	
v6	40	#9	11'-6"	
w4	10	#6	20'-10"	

ITEM	UNIT	QUANTITY
CLASS X CONCRETE	CU.YDS.	80.6
REINFORCEMENT BARS	LBS.	8600
STEEL PILES (8 BP 36)	LIN. FT.	252

PILE DATA

TYPE- STEEL PILES (8 BP 36)
EST. LENGTH 14'
NO. REQ'D. 18

BAR	A	B
S5	2'-2"	2'-0"
S6	2'-2"	1'-10"
S8	1'-8"	2'-4"
S9	2'-2"	2'-10"
S10	1'-8"	2'-7"
S12	2'-2"	5'-10"

NOTES:

SPACE REINFORCEMENT IN CAP TO MISS ANCHOR BOLTS.
MIN. BAR LAPS = 20 DIA. UNLESS OTHERWISE NOTED.
ALL EDGES SHALL HAVE STANDARD 3/4" CHAMFERS EXCEPT AS NOTED.
POUR STEPS MONOLITHICALLY WITH CAP.

DESIGNED	R.K.
CHECKED	G.P.
DRAWN	J.E.
CHECKED	G.P.

EXAMINED _____ 19 _____
ENGINEER OF BRIDGE AND TRAFFIC STRUCTURES
PASSED _____
ENGINEER OF DESIGN
APPROVED _____
CHIEF HIGHWAY ENGINEER

PIER NO. 2 N.B. LANE
F.A.I. 57-SEC. 41-4HB-2
JEFFERSON COUNTY
STA. 1239+78.86

MODEL: PLOT
FILE NAME: Y:\IDOT\1295-11_78550\CADD\Highway\CADD Sheets\0978550-hr-rem115.dgn

ESCA CONSULTANTS, INC.

USER NAME = skm	DESIGNED - JMK	REVISED -	
ESCA PROJECT NO. 1295.11	DRAWN - JMK	REVISED -	
PLOT SCALE = 0.1667 ' / in.	CHECKED - ELH	REVISED -	
PLOT DATE = 12/23/2020	DATE - 11/20	REVISED -	

STATE OF ILLINOIS
DEPARTMENT OF TRANSPORTATION

SN 041-0014 / 0015 BRIDGE PLANS
FOR INFORMATION ONLY

SCALE: NONE | SHEET NO. 15 OF 15 SHEETS | STA. | TO STA.

F.A.I. RTE.	SECTION	COUNTY	TOTAL SHEETS	SHEET NO.
57	(41-4)B-1;(41-4)B-2	JEFFERSON	257	192

CONTRACT NO. 78550
ILLINOIS | FED. AID PROJECT

B.M.: 6" Spike in 8" persimmon 125' Rt. Sta. 1252+04
Elev. 564.68
No Existing Structure.

STATE OF ILLINOIS
DEPARTMENT OF PUBLIC WORKS & BUILDINGS
DIVISION OF HIGHWAYS

ROUTE NO.	SECTION	COUNTY	TOTAL SHEETS	SHEET NO.
F.A.I. 57	41-4VB	JEFFERSON	6	22

SHEET NO. 1
10 SHEETS

FED. ROAD DIST. NO. 7 ILLINOIS FED. AID PROJECT IG-57-3(20)103

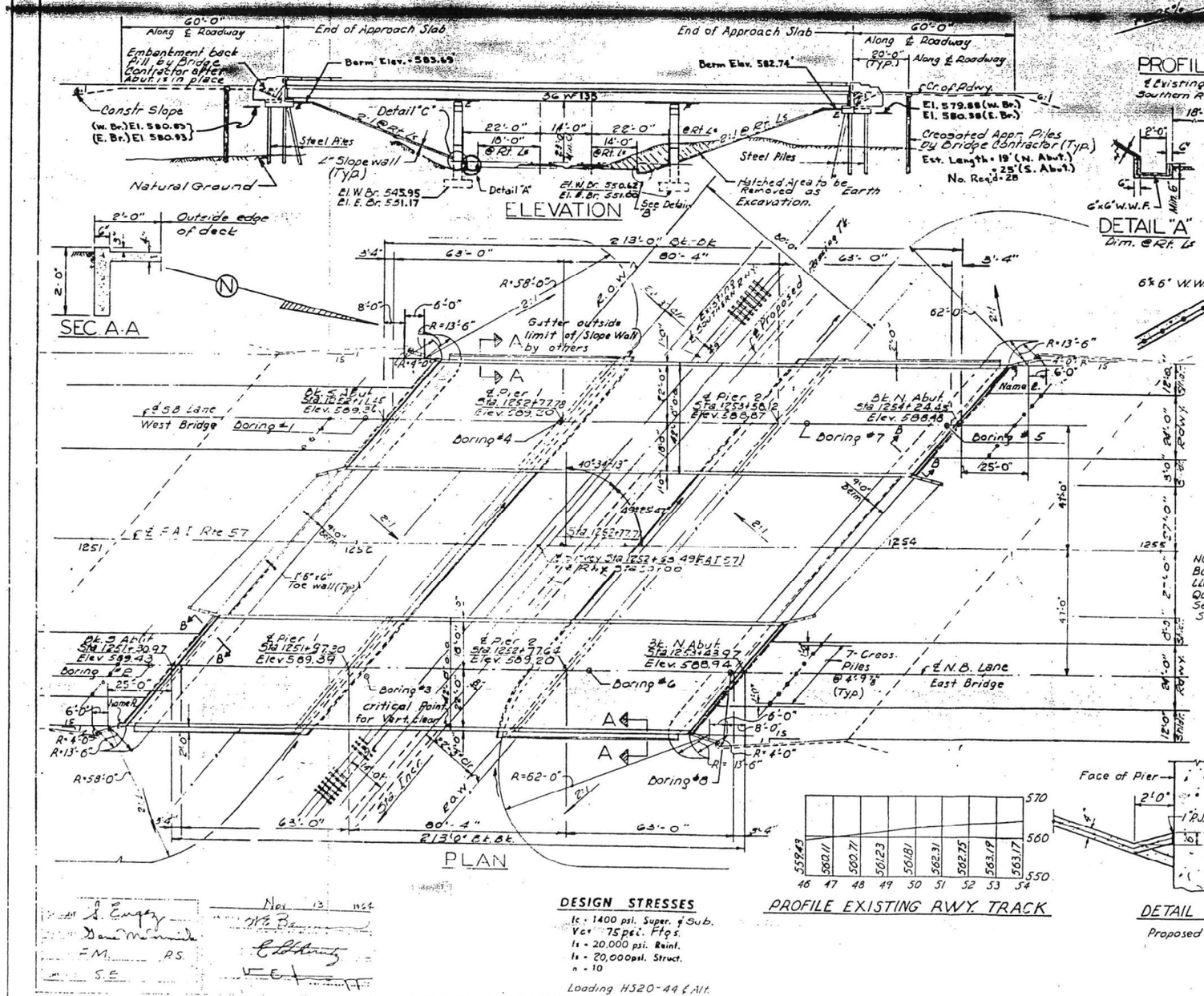

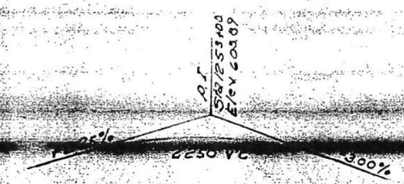

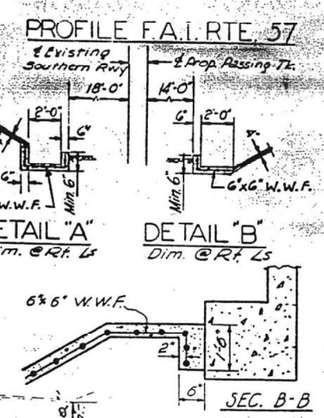

GENERAL NOTES

Coarse aggregate to be used in parapet handrails and end posts must be absolutely free of chert, flint, limonite, lignite and soft sands stone.

The concrete floor slab shall be finished in accordance with Article 51.19 of the Standard Specifications.

Slope Wall shall be reinforced with welded wire fabric 6"x6" mesh, weighing 58# per 100 sq. ft.

All reinforcement bars shall be lapped 20 diameters unless otherwise shown.

All structural steel shall conform to A.S.T.M. designation A-36.

The exposed surfaces of the expansion guard shall be given two shop coats of red lead paint, the contact surfaces shall be given one coat of red lead paint. Anchor studs shall not be painted.

Expansion guards are included in the quantity of Structural Steel. Estimated weight 2,870 lbs.

Except as otherwise provided, all structural steel shall recieve one shop coat of red lead paint and two field coats of aluminum paint. See Article 56.1 to 56.5 inclusive of the Standard Specifications.

The contractor shall drive one steel test pile each at the North Abutment (E. Bridge) and South Abutment (W. Bridge) as directed by the Engineer before ordering the remainder of piles.

Excavation for portions of Structures in the embankments shall ... be classified.

Permanent forms will not be permitted in forming the concrete deck.

SOUTHERN R.R.
BUILT 196 BY
STATE OF ILLINOIS
F.A.I. 57 SEC. 41-4VB
F.A. PROJ. IG-57-3(20)
STA. 1252+77.71
LOADING HS20 & ALT.

NAME PLATE
See std 2113-1

NOTE:
Borrow & Earth Excavation included in Quantity Summary. See Plan & Profile Sheets 4 & 5.

TOTAL BILL OF MATERIAL

	Item	Unit	Super.	Sub.	Total
*	Class A Excavation for Structures	Cu. Yds.		953	953
	Class X Concrete	Cu. Yds.	462.1	671.6	1133.7
	Structural Steel	Lbs.	487,350		487,350
	Aluminum Handrail	Lin. Ft.	835		835
	Reinforcement Bars	Lbs.	123,390	71,210	194,600
	Creosoted Piles (up to 20')	Lin. Ft.		266	266
	Creosoted Piles (20.1' to 38')	Lin. Ft.		350	350
	Steel Piles (BBP36)	Lin. Ft.		1554	1554
	Test Piles Steel (BBP36)	Each		2	2
	Slope Wall (4")	Sq. Yds.		2,633	2,633
	Protective Coat	Sq. Yds.	2,164		2,164
**	Bridge Seat Sealant	Lump Sum			1
	Name Plates	Each		2	2

* Includes Excavation for Slope Wall
** At Abutments Only

PROFILE EXISTING RWY. TRACK

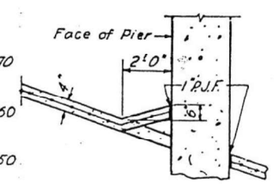

DETAIL C
Proposed Structures

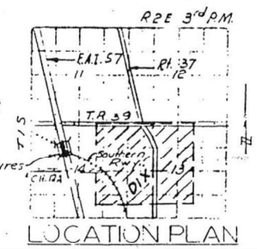

LOCATION PLAN

DESIGN STRESSES
fc = 1400 psi. Super. & Sub.
Vc = 75 psi. Ftgs.
fs = 20,000 psi. Reinf.
fs = 20,000 psi. Struct.
n = 10

Loading HS20-44 & Alt.

GENERAL PLAN ELEVATION
PROJ IG-57-3(20) 103
F.A.I. 57 OVER SOUTHERN RWY.
F.A.I. RTE. 57 SEC. 41-4VB
JEFFERSON COUNTY
STA. 1252+77.71

A. Engay
Dave McNeil
E.M. P.S.
S.E.
Nov 13 1964
Wm Bar
E.L. Hanny

ESCA CONSULTANTS, INC.

USER NAME = skm	DESIGNED - JMK	REVISED -	
ESCA PROJECT NO. 1295.11	DRAWN - JMK	REVISED -	
PLOT SCALE = 0.1667 ' / in.	CHECKED - ELH	REVISED -	
PLOT DATE = 12/23/2020	DATE - 11/20	REVISED -	

STATE OF ILLINOIS
DEPARTMENT OF TRANSPORTATION

SN 041-0016 / 0017 BRIDGE PLANS
FOR INFORMATION ONLY

SCALE: NONE | SHEET NO. 1 OF 8 SHEETS | STA. | TO STA.

F.A.I. RTE.	SECTION	COUNTY	TOTAL SHEETS	SHEET NO.
57	(41-4)B-1;(41-4)B-2	JEFFERSON	257	193

CONTRACT NO. 78550
ILLINOIS | FED. AID PROJECT

MODEL: PLOT
FILE NAME: Y:\D0011295-11_78550\CADD\Highway\CADD Sheets\0978550-sht-gen201.dgn

STATE OF ILLINOIS
DEPARTMENT OF PUBLIC WORKS & BUILDINGS
DIVISION OF HIGHWAYS

ROUTE NO.	SECTION	COUNTY	TOTAL SHEETS	SHEET NO.
F.A.I. 57	41-4VB	JEFFERSON	7	22
FED. ROAD DIST. NO. 7	ILLINOIS	FED. AID PROJECT-		

SHEET NO. 2
10 SHEETS

Note:
Order a_1 and a_2 bars full length, cut to fit skew and use remainder of bars in opposite end.
Bars indicated thus 20x3 – #5 etc. indicates 20 lines of bars with 3 lengths per line.
Min bar laps = 20 dia.

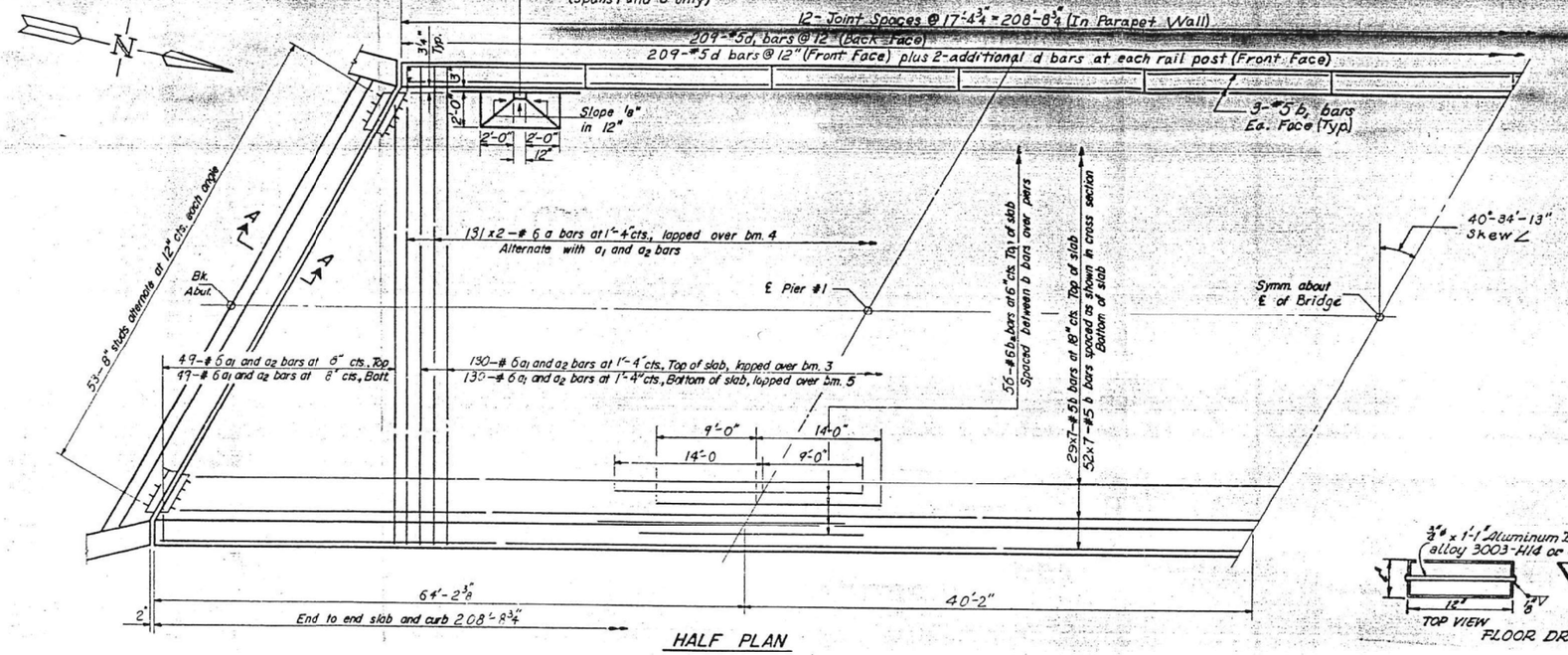

HALF PLAN

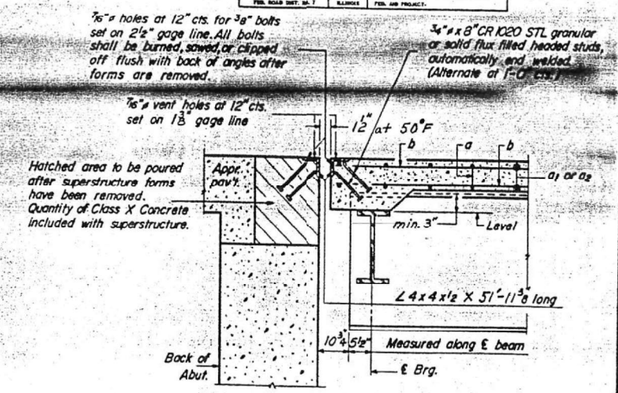

SECTION A-A

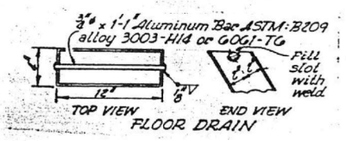

FLOOR DRAIN

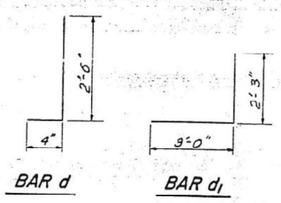

BAR d BAR d_1

FOR 2-BRIDGES
BILL OF MATERIAL

Bar	No.	Size	Length	Shape
a	524	#6	25'-5"	
a_1	716	#6	28'-0"	
a_2	716	#6	15'-3"	
b	1134	#5	30'-9"	
b_1	288	#5	17'-0"	
b_2	224	#6	23'-0"	
d	1044	#5	2'-10"	
d_1	836	#5	5'-3"	
Class X Concrete			Cu. Yd.	462.1
Reinforcement Bars			Lbs.	123,390
Structural Steel				489,348

* Weight of bearing assemblies with lead & shim plates and anchor bolts are included as structural steel. Est. Weight = 16,610 lbs.

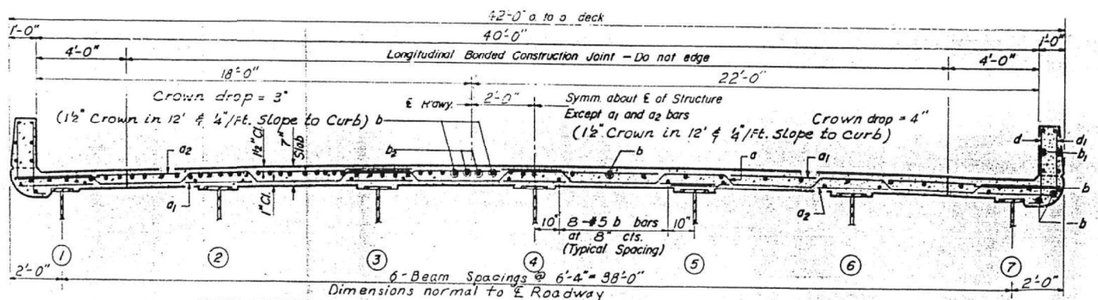

NEAR PIERS CROSS SECTION NEAR MIDSPAN

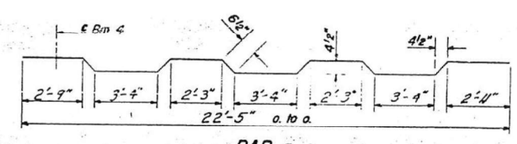

BAR a

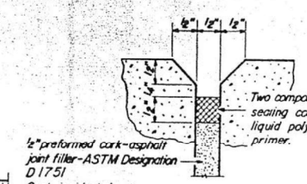

SECTION B-B

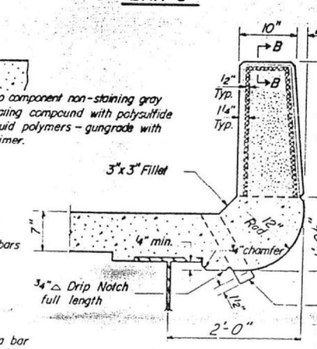

PARAPET DETAIL

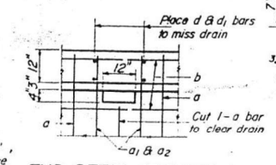

TYP. DETAIL AT DRAIN

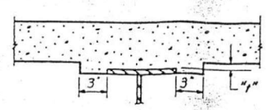

STANDARD FILLET DETAIL

To determine "f": After all structural steel has been erected, elevations of the top flanges of the beams shall be taken at intervals shown on sheets #8 & 9. These elevations subtracted from the "Grade Elevations Adjusted for Dead Load Deflections" shown on sheet 2, minus slab thickness, equals the fillet heights "f" above top of beams.

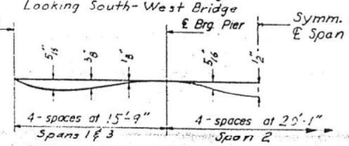

DEAD LOAD DEFLECTION DIAGRAM

(Includes weight of concrete only)
Note. The above deflections are not to be used in the field if the engineer is working from the grade elevations adjusted for dead load deflections as shown on sheets #8 & 9

Looking North-East Bridge
Looking South-West Bridge

DESIGNED S. Engerg
CHECKED H. McCormick
R.P. Summer
DRAWN D.L. Beemer
CHECKED T.E.

EXAMINED Nov. 13 1964 H.E. Bierman — ENGINEER OF BRIDGE AND TRAFFIC STRUCTURES
PASSED
APPROVED — ENGINEER OF DESIGN — CHIEF HIGHWAY ENGINEER

I-7-L (>15°) 11-15-62

SUPERSTRUCTURE
F.A.I. RT. 57 SEC. 41-4VB
OVER SOUTHERN RAILWAY
JEFFERSON COUNTY
STA. 1252+77.71

MODEL: PLOT
FILE NAME: Y:\DOT\1295-11_78550\CADD\Highway\CADD Sheets\0978550-sht-rem202.dgn

ESCA CONSULTANTS, INC.

USER NAME = skm	DESIGNED - JMK	REVISED -	
ESCA PROJECT NO. 1295.11	DRAWN - JMK	REVISED -	
PLOT SCALE = 0.1667 ' / in.	CHECKED - ELH	REVISED -	
PLOT DATE = 12/23/2020	DATE - 11/20	REVISED -	

STATE OF ILLINOIS
DEPARTMENT OF TRANSPORTATION

SN 041-0016 / 0017 BRIDGE PLANS
FOR INFORMATION ONLY

SCALE: NONE | SHEET NO. 2 OF 8 SHEETS | STA. | TO STA.

F.A.I. RTE.	SECTION	COUNTY	TOTAL SHEETS	SHEET NO.
57	(41-4)B-1;(41-4)B-2	JEFFERSON	257	194

CONTRACT NO. 78550
ILLINOIS | FED. AID PROJECT

STATE OF ILLINOIS
DEPARTMENT OF PUBLIC WORKS & BUILDINGS
DIVISION OF HIGHWAYS

ROUTE NO.	SECTION	COUNTY	TOTAL SHEETS	SHEET NO.
F.A.I. 57	41-4VB	JEFFERSON	8	22

SHEET NO. 3
10 SHEETS

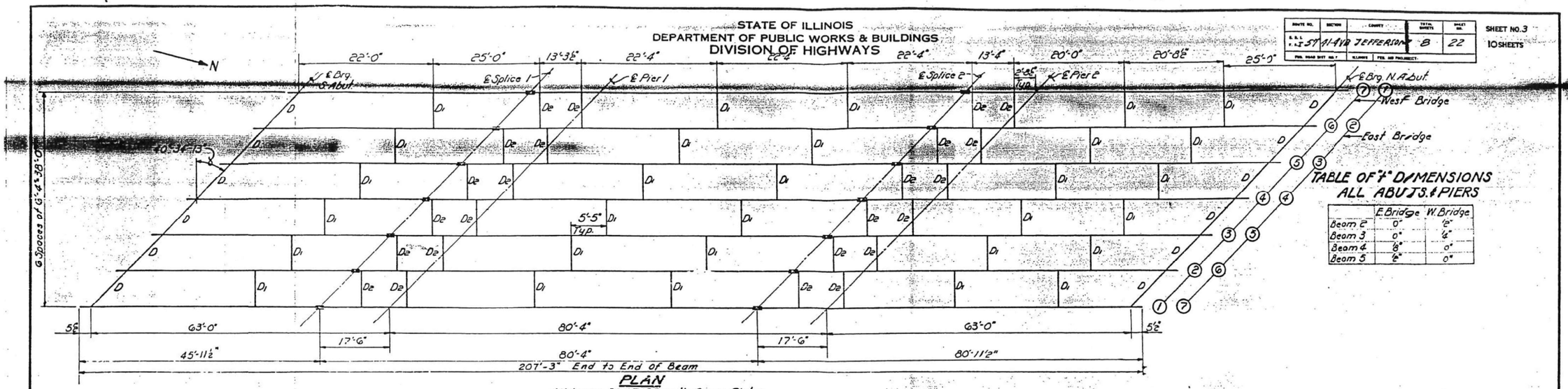

PLAN

All beams 36WF135 with Cover Plates
11" x ½" x 16'-7" at Piers 1 & 2

TABLE OF "Y" DIMENSIONS
ALL ABUTS. & PIERS

	E. Bridge	W. Bridge
Beam 2	0"	2"
Beam 3	0"	¼"
Beam 4	⅛"	0"
Beam 5	2"	0"

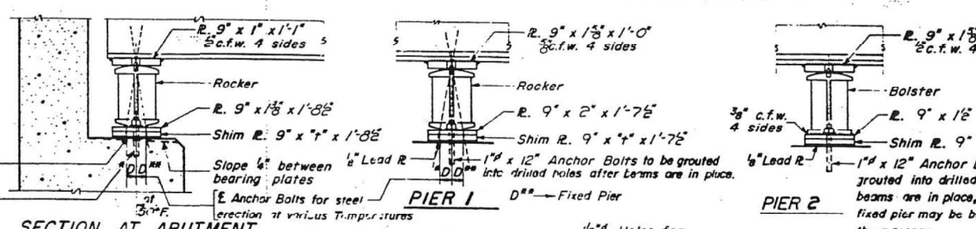

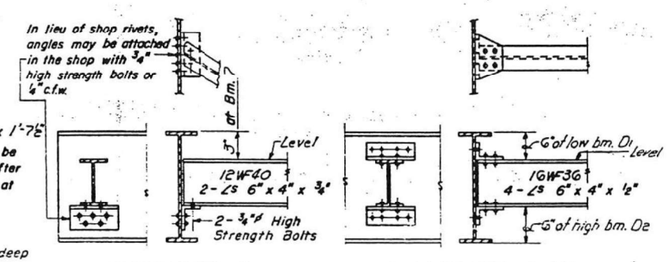

DIAPHRAGM D
24 - Required

DIAPHRAGM D1 & D2
108 - Required

*D = ⅛" for 1° exp. for every 15° below the normal temp. of 50°.
D** = ⅛"/100 ft. of exp. for every 15° above the normal temp. of 50°.

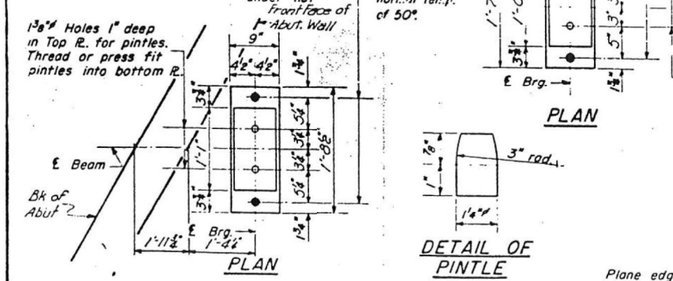

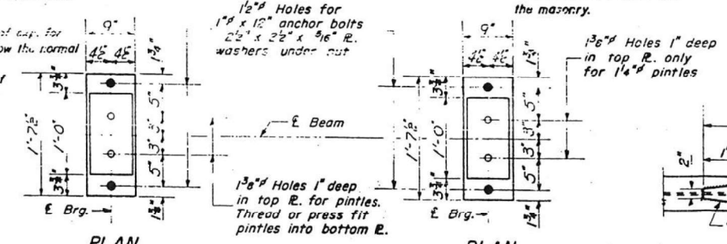

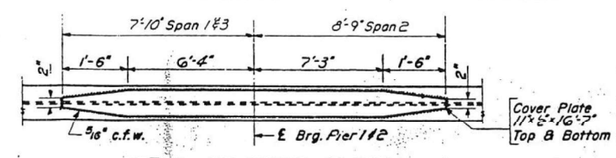

DETAIL OF COVER PLATE

(*) ELEVATION TOP OF WF

EAST BRIDGE

	℄ Brg. S. Abut.	℄ Splice 1	℄ Pier 1	℄ Splice 2	℄ Pier 2	℄ Brg. N. Abut.
BM 1	588.62	588.54	588.50	588.36	588.30	588.07
BM 2	588.75	588.67	588.63	588.49	588.43	588.20
BM 3	588.83	588.75	588.71	588.57	588.51	588.28
BM 4	588.84	588.77	588.73	588.59	588.52	588.30
BM 5	588.70	588.71	588.67	588.53	588.47	588.24
BM 6	588.66	588.59	588.55	588.41	588.34	588.12
BM 7	588.53	588.45	588.41	588.27	588.21	587.98

WEST BRIDGE

	℄ Brg. S. Abut.	℄ Splice 1	℄ Pier 1	℄ Splice 2	℄ Pier 2	℄ Brg. N. Abut.
BM 1	588.59	588.43	588.35	588.09	587.99	587.64
BM 2	588.72	588.55	588.47	588.21	588.03	587.77
BM 3	588.79	588.63	588.54	588.28	588.19	587.84
BM 4	588.77	588.61	588.53	588.27	588.17	587.82
BM 5	588.71	588.54	588.46	588.20	588.10	587.76
BM 6	588.57	588.41	588.33	588.07	587.98	587.63
BM 7	588.43	588.27	588.19	587.93	587.83	587.48

(*) These elevations do not include any allowance for deflection.

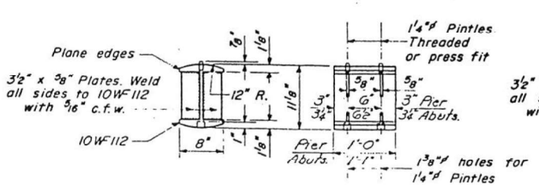

DETAIL OF ROCKER AT PIER 1 & ABUTS.

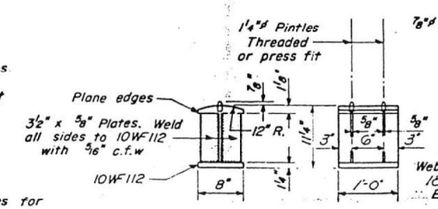

DETAIL OF BOLSTER AT PIER 2

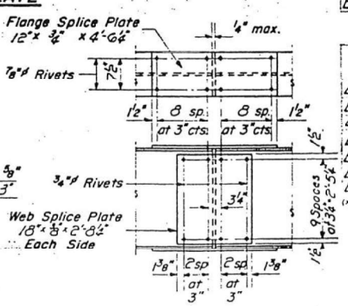

DETAIL OF SPLICE

STRUCTURAL STEEL
F.A.I. 57 SEC. 41-4VB
OVER SOUTHERN RAILWAY
JEFFERSON COUNTY
STA. 1252+77.71

DESIGNED S. Engerg
CHECKED
P.G. Barnett
DRAWN W. A. Sausaman Jr.
CHECKED S.E.

EXAMINED Nov. 13 1964
PASSED
APPROVED

I-2-C 7-2-62 Rev 11-9-62 Rev 8-16-63 Rev 12-10-63

ESCA CONSULTANTS, INC.	USER NAME = skm	DESIGNED - JMK	REVISED -	STATE OF ILLINOIS DEPARTMENT OF TRANSPORTATION	SN 041–0016 / 0017 BRIDGE PLANS FOR INFORMATION ONLY	F.A.I. RTE.	SECTION	COUNTY	TOTAL SHEETS	SHEET NO.
	ESCA PROJECT NO. 1295.11	DRAWN - JMK	REVISED -			57	(41-4)B-1;(41-4)B-2	JEFFERSON	257	195
	PLOT SCALE = 0.1667 ' / in.	CHECKED - ELH	REVISED -					CONTRACT NO. 78550		
	PLOT DATE = 12/23/2020	DATE - 11/20	REVISED -		SCALE: NONE SHEET NO. 3 OF 8 SHEETS STA. TO STA.			ILLINOIS FED. AID PROJECT		

MODEL: PLOT
FILE NAME: Y:\DOT\1295-11_78550\CADD\Highway\CADD Sheets\0978550-ilr-rom203.dgn

STATE OF ILLINOIS
DEPARTMENT OF PUBLIC WORKS & BUILDINGS
DIVISION OF HIGHWAYS

ROUTE NO.	SECTION	COUNTY	TOTAL SHEETS	SHEET NO.
F.A.I. 57	41-4VB	JEFFERSON	9	22

FED. ROAD DIST. NO. 7 ILLINOIS FED. AID PROJECT

SHEET NO. 4
10 SHEETS

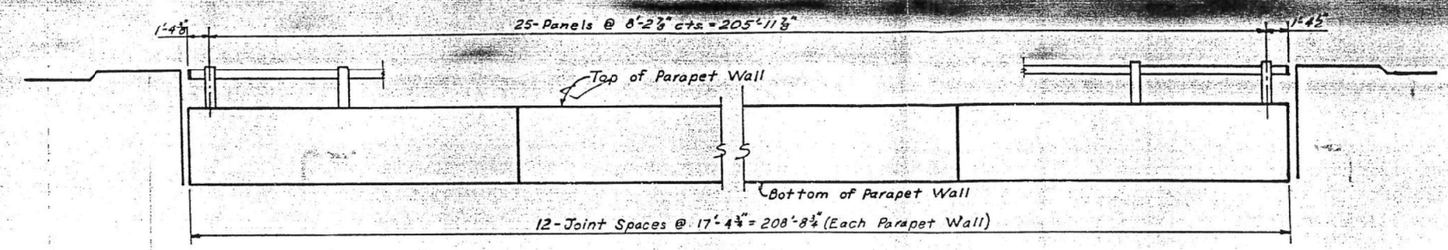

ELEVATION
Dimensions along ℄ Handrail

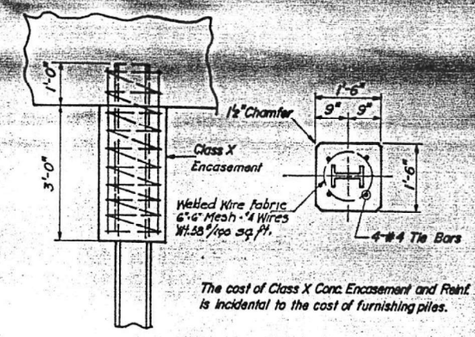

The cost of Class X Conc. Encasement and Paint is incidental to the cost of furnishing piles.

STEEL PILE ENCASEMENT DETAIL

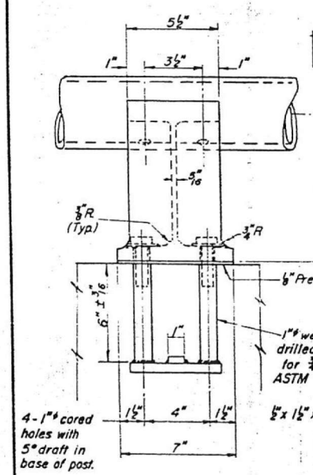

VIEW B-B

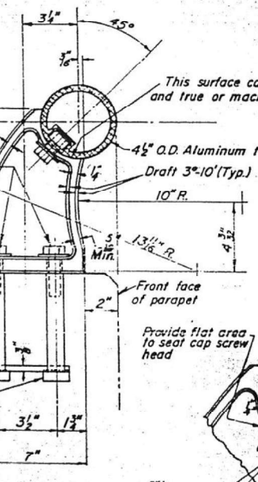

SECTION A-A

RAIL POST DETAILS

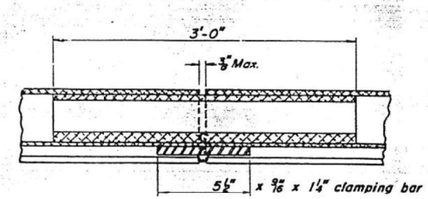

SECTION C-C

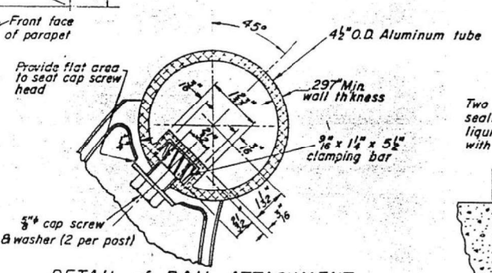

DETAIL of RAIL ATTACHMENT to POST

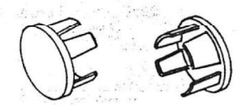

CAST END CAP
DRIVE FIT TYPE
8 Required

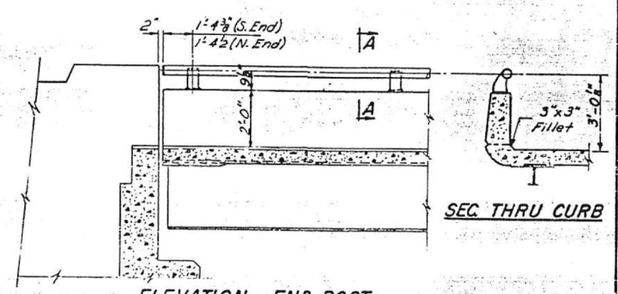

SEC. THRU CURB

ELEVATION — END POST

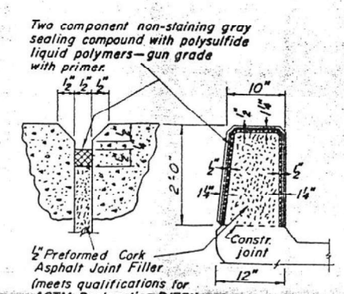

PARAPET JOINT DETAIL

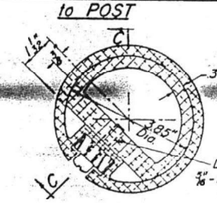

RAILING SPLICE DETAIL

NOTES:

All Posts shall be normal to parapet.

All Aluminum Alloy Extruded Rail shall conform to ASTM specification B-235 alloy 6061-T6, or 6062-T6, and shall extend a minimum of 2 panel lengths (attached to a minimum of 3 posts) except at ends or at open joints where a minimum of 1 panel length is required. All joints in railing must be spliced per detail.

See Special Provisions for following Material Specifications:

Cast Aluminum Alloy Bridge Post Alloy 344-T4.
Stainless Steel Machine Bolts, Washers, and Bars.

For material composition of Prefabricated Pad, see Article 54.9(f), (Bearing and Anchorage), of the Standard Specifications.

METHOD of MEASUREMENT: Aluminum handrail shall be measured, in lineal feet. The length paid for shall be the over all length along the top longitudinal railing member thru all posts and gaps.

BASIS of PAYMENT: Aluminum handrail shall be paid for at the contract unit price per lineal foot for ALUMINUM HANDRAIL, measured as specified, which price shall be payment in full for all materials, fabrication, transportation, and erection.

Cost of rail splice, end caps, and hardware to be incidental to item ALUMINUM HANDRAIL.

FOR 2-BRIDGES
BILL of MATERIAL

Item	Unit	Quantity
ALUMINUM HANDRAIL	Lin. Ft.	835

ALUMINUM HANDRAIL
F.A.I. 57 - SEC. 41 - 4VB
OVER SOUTHERN RAILWAY
JEFFERSON COUNTY
STA. 1252 + 77.71

DESIGNED	S. Engey	
CHECKED	R.P. Summer	
DRAWN	Wm M Best	
CHECKED	S.E.	

Nov. 13 1964
EXAMINED
PASSED
APPROVED

R-19 Dwn. 6-25-64

MODEL: PLOT
FILE NAME: Y:\IDOT\1295-11_78550\CADD\Highway\CADD Sheets\097850-hr-rem204.dgn

ESCA CONSULTANTS, INC.

USER NAME = skm	DESIGNED - JMK	REVISED -	
ESCA PROJECT NO. 1295.11	DRAWN - JMK	REVISED -	
PLOT SCALE = 0.1667 ' / in.	CHECKED - ELH	REVISED -	
PLOT DATE = 12/23/2020	DATE - 11/20	REVISED -	

STATE OF ILLINOIS
DEPARTMENT OF TRANSPORTATION

SN 041-0016 / 0017 BRIDGE PLANS
FOR INFORMATION ONLY

SCALE: NONE | SHEET NO. 4 OF 8 SHEETS | STA. | TO STA.

F.A.I. RTE.	SECTION	COUNTY	TOTAL SHEETS	SHEET NO.
57	(41-4)B-1;(41-4)B-2	JEFFERSON	257	196

CONTRACT NO. 78550
ILLINOIS FED. AID PROJECT

STATE OF ILLINOIS
DEPARTMENT OF PUBLIC WORKS & BUILDINGS
DIVISION OF HIGHWAYS

ROUTE NO.	SECTION	COUNTY	TOTAL SHEETS	SHEET NO.
F.A.I. 57	41-4VB	JEFFERSON	10	22

SHEET NO. 5
10 SHEETS

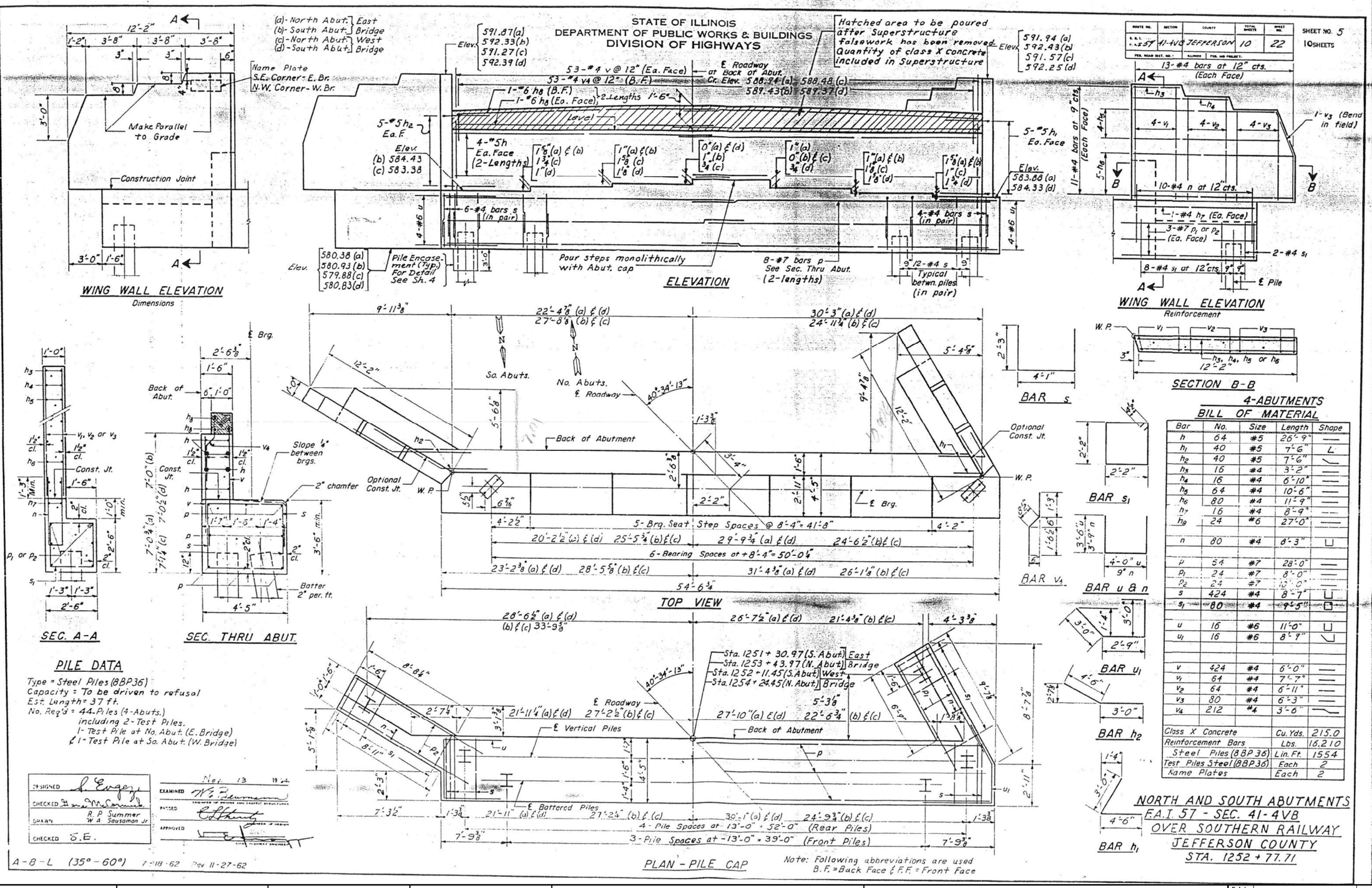

PILE DATA

Type = Steel Piles (8BP36)
Capacity = To be driven to refusal
Est. Length = 37 ft.
No. Req'd = 44 - Piles (4-Abuts.)
including 2 - Test Piles.
1 - Test Pile at No. Abut. (E. Bridge)
& 1 - Test Pile at So. Abut. (W. Bridge)

DESIGNED	L. Evegeg
CHECKED	H. [illegible]
DRAWN	R. P. Summer, W. A. Sousaman Jr.
CHECKED	S.E.

Nov. 13 19 64
EXAMINED W. P. Summer — ENGINEER OF BRIDGE AND TRAFFIC STRUCTURES
PASSED — ENGINEER OF DESIGN
APPROVED — CHIEF HIGHWAY ENGINEER

A - 8 - L (35° - 60°) 7-18-62 Rev. 11-27-62

4-ABUTMENTS BILL OF MATERIAL

Bar	No.	Size	Length	Shape
h	64	#5	26'-9"	—
h1	40	#5	7'-6"	L
h2	40	#5	7'-6"	—
h3	16	#4	3'-2"	—
h4	16	#4	6'-10"	—
h5	64	#4	10'-6"	—
h6	80	#4	11'-9"	—
h7	16	#4	8'-9"	—
h8	24	#6	27'-0"	—
n	80	#4	8'-3"	U
p	64	#7	28'-0"	—
p1	24	#7	8'-0"	—
p2	24	#7	10'-0"	—
s	424	#4	8'-7"	U
s1	80	#4	9'-5"	U
u	16	#6	11'-0"	U
u1	16	#6	8'-7"	U
v	424	#4	6'-0"	—
v1	64	#4	7'-7"	—
v2	64	#4	6'-11"	—
v3	80	#4	6'-3"	—
v4	212	#4	3'-6"	—

Class X Concrete	Cu. Yds.	215.0
Reinforcement Bars	Lbs.	16,210
Steel Piles (8BP36)	Lin. Ft.	1554
Test Piles Steel (8BP36)	Each	2
Name Plates	Each	2

NORTH AND SOUTH ABUTMENTS
F.A.I. 57 - SEC. 41-4VB
OVER SOUTHERN RAILWAY
JEFFERSON COUNTY
STA. 1252 + 77.71

MODEL: PLOT
FILE NAME: Y:\DOT\1295-11_78550\CADD\Highway\CADD Sheets\0978050-sht-rem205.dgn

ESCA CONSULTANTS, INC.

USER NAME = skm	DESIGNED - JMK	REVISED -	
ESCA PROJECT NO. 1295.11	DRAWN - JMK	REVISED -	
PLOT SCALE = 0.1667 ' / in.	CHECKED - ELH	REVISED -	
PLOT DATE = 12/23/2020	DATE - 11/20	REVISED -	

STATE OF ILLINOIS
DEPARTMENT OF TRANSPORTATION

SN 041-0016 / 0017 BRIDGE PLANS
FOR INFORMATION ONLY

SCALE: NONE | SHEET NO. 5 OF 8 SHEETS | STA. | TO STA.

F.A.I. RTE.	SECTION	COUNTY	TOTAL SHEETS	SHEET NO.
57	(41-4)B-1;(41-4)B-2	JEFFERSON	257	197

CONTRACT NO. 78550
ILLINOIS | FED. AID PROJECT

STATE OF ILLINOIS
DEPARTMENT OF PUBLIC WORKS & BUILDINGS
DIVISION OF HIGHWAYS

ROUTE NO.	SECTION	COUNTY	TOTAL SHEETS	SHEET NO.
F.A.I. 57	41-4VB	JEFFERSON	11	22

SHEET NO. 6
10 SHEETS

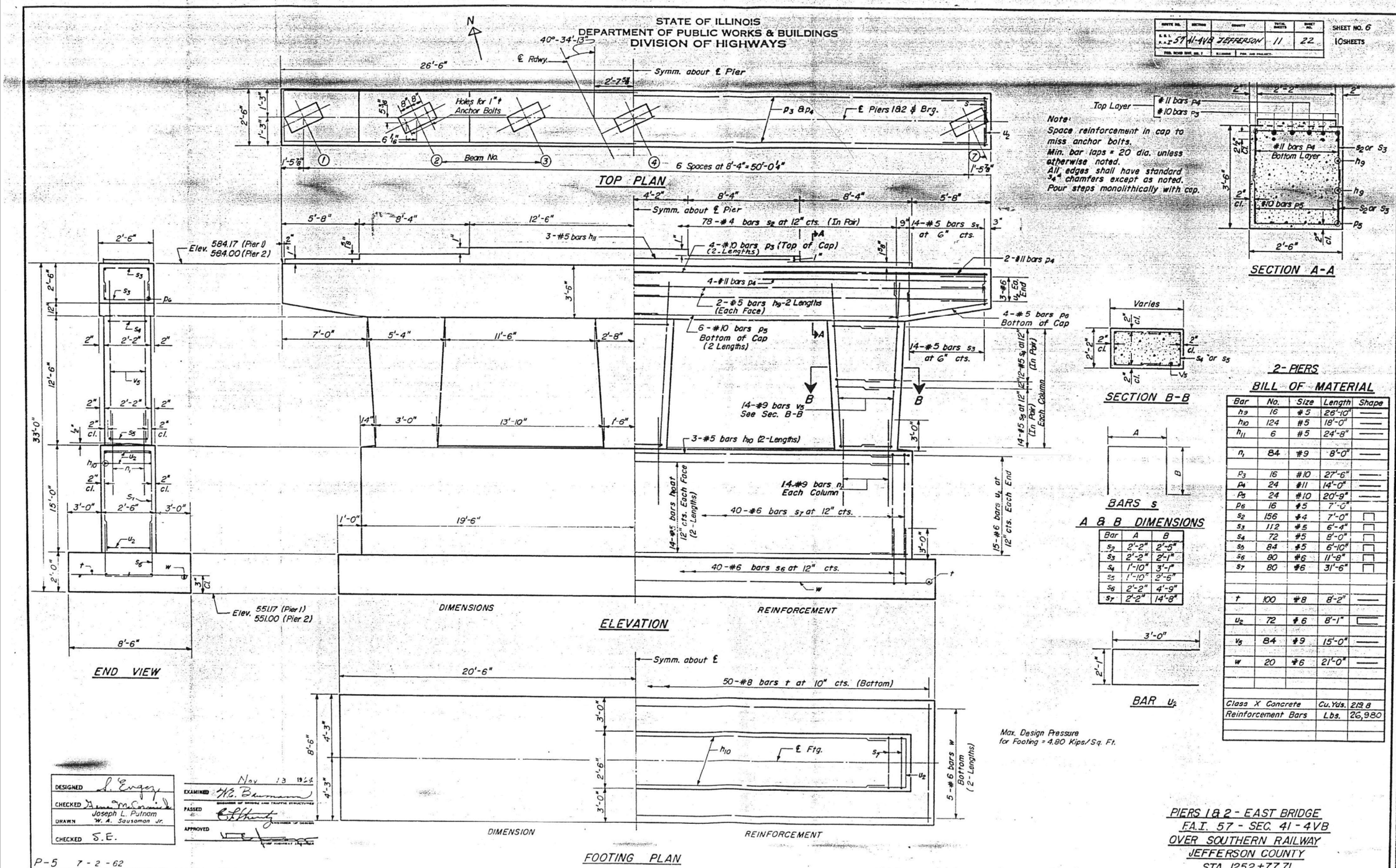

2-PIERS
BILL OF MATERIAL

Bar	No.	Size	Length	Shape
h9	16	#5	26'-10"	
h10	124	#5	18'-0"	
h11	6	#5	24'-8"	
n1	84	#9	8'-0"	
p3	16	#10	27'-6"	
p4	24	#11	14'-0"	
p5	24	#10	20'-9"	
p6	16	#5	7'-0"	
s2	156	#4	7'-0"	
s3	112	#5	6'-4"	
s4	72	#5	8'-0"	
s5	84	#5	6'-10"	
s6	80	#6	11'-8"	
s7	80	#6	31'-6"	
t	100	#8	8'-2"	
u2	72	#6	8'-1"	
v5	84	#9	15'-0"	
w	20	#6	21'-0"	
Class X Concrete			Cu. Yds.	219.8
Reinforcement Bars			Lbs.	26,980

DESIGNED	L. Enger
CHECKED	Jerome McCormick
DRAWN	Joseph L. Putnam, W. A. Sausaman Jr.
CHECKED	S.E.

Nov 13 1964
EXAMINED H. R. Baumann — ENGINEER OF BRIDGE AND TRAFFIC STRUCTURES
PASSED — ENGINEER OF DESIGN
APPROVED — CHIEF HIGHWAY ENGINEER

P-5 7-2-62

PIERS 1 & 2 - EAST BRIDGE
F.A.I. 57 - SEC. 41-4VB
OVER SOUTHERN RAILWAY
JEFFERSON COUNTY
STA. 1252+77.71

MODEL: PLOT
FILE NAME: Y:\IDOT\1295-11_78550\CADD\Highway\CADD Sheets\0978550-sht-rem206.dgn

ESCA CONSULTANTS, INC.

USER NAME = skm	DESIGNED - JMK	REVISED -	
ESCA PROJECT NO. 1295.11	DRAWN - JMK	REVISED -	
PLOT SCALE = 0.1667 ' / in.	CHECKED - ELH	REVISED -	
PLOT DATE = 12/23/2020	DATE - 11/20	REVISED -	

STATE OF ILLINOIS
DEPARTMENT OF TRANSPORTATION

SN 041-0016 / 0017 BRIDGE PLANS
FOR INFORMATION ONLY

SCALE: NONE | SHEET NO. 6 OF 8 SHEETS | STA. | TO STA.

F.A.I. RTE.	SECTION	COUNTY	TOTAL SHEETS	SHEET NO.
57	(41-4)B-1;(41-4)B-2	JEFFERSON	257	198

CONTRACT NO. 78550
ILLINOIS | FED. AID PROJECT

STATE OF ILLINOIS
DEPARTMENT OF PUBLIC WORKS & BUILDINGS
DIVISION OF HIGHWAYS

ROUTE NO.	SECTION	COUNTY	TOTAL SHEETS	SHEET NO.
S.B.I. F.A.				
FED. ROAD DIST. NO. 7	ILLINOIS	FED. AID PROJECT		

SHEET NO. 6a
10 SHEETS

N

Notes:
Space reinforcement in cap to miss anchor bolts.
Min. bar laps = 20 dia unless otherwise noted.
All edges shall have standard ¾" chamfers except as noted.
Pour steps monolithically with cap.
All P_4 bars shall be placed to the outermost end of the cantilevers.
Pier cap revised during construction, no quantity changes.
See sheet #6 for BILL of MATERIAL & bar details.

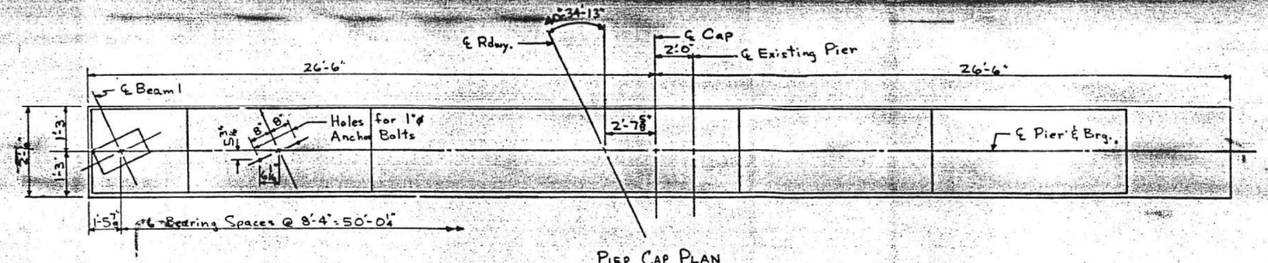

PIER CAP PLAN
(DIMENSIONS)

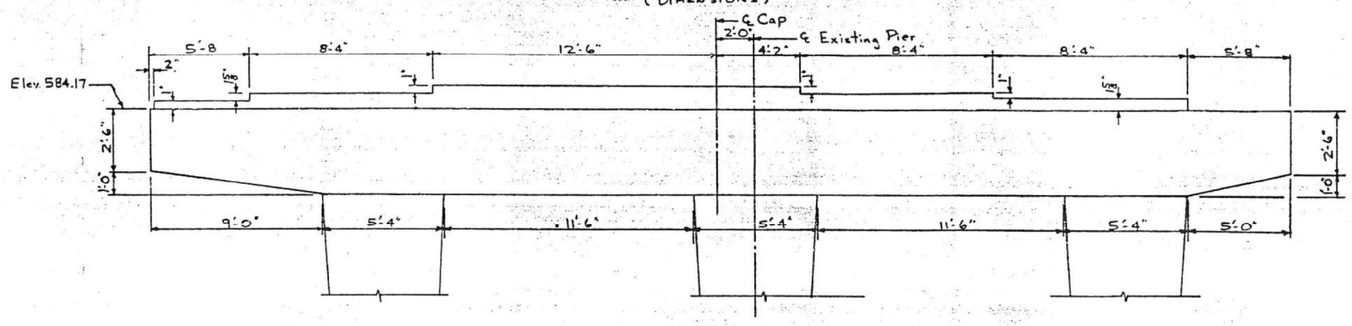

PIER CAP ELEVATION
(DIMENSIONS)

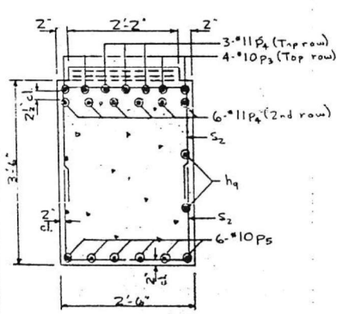

SECTION A-A

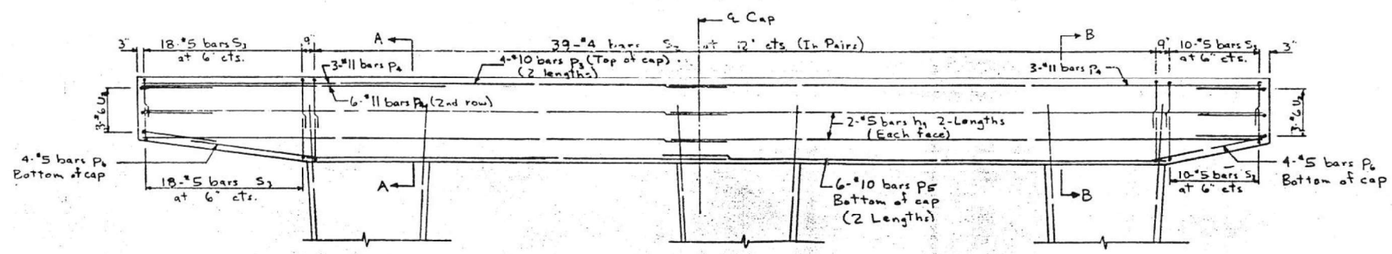

PIER CAP ELEVATION
(Reinforcement)

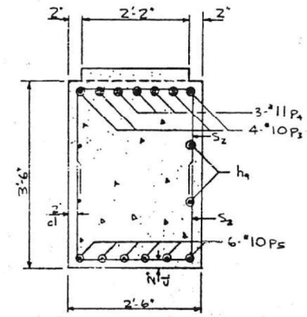

SECTION B-B

DESIGNED GENE MCCORMICK	EXAMINED 19
CHECKED John Hayes	PASSED ENGINEER OF BRIDGE AND TRAFFIC STRUCTURES
DRAWN J Kessler	APPROVED ENGINEER OF BRIDGES
CHECKED	CHIEF HIGHWAY ENGINEER

REVISED PIER CAP
PIER 1 EAST BRIDGE
F.A.I. 57 SEC 41-4 V2
OVER SOUTHERN RW'Y
JEFFERSON COUNTY
STATION 1252+77.77

MODEL: PLOT
FILE NAME: Y:\ID011295-11_78550\CADD\Highway\CADD_Sheets\0978550-sht-pier207.dgn

ESCA CONSULTANTS, INC.

USER NAME = skm	DESIGNED - JMK	REVISED -	
ESCA PROJECT NO. 1295.11	DRAWN - JMK	REVISED -	
PLOT SCALE = 0.1667 ' / in.	CHECKED - ELH	REVISED -	
PLOT DATE = 12/23/2020	DATE - 11/20	REVISED -	

STATE OF ILLINOIS
DEPARTMENT OF TRANSPORTATION

SN 041-0016 / 0017 BRIDGE PLANS
FOR INFORMATION ONLY

SCALE: NONE | SHEET NO. 7 OF 8 SHEETS | STA. | TO STA.

F.A.I. RTE.	SECTION	COUNTY	TOTAL SHEETS	SHEET NO.
57	(41-4)B-1;(41-4)B-2	JEFFERSON	257	199
		CONTRACT NO. 78550		
		ILLINOIS FED. AID PROJECT		

STATE OF ILLINOIS
DEPARTMENT OF PUBLIC WORKS & BUILDINGS
DIVISION OF HIGHWAYS

ROUTE NO.	SECTION	COUNTY	TOTAL SHEETS	SHEET NO.
F.A.I. 57	41-4VB	JEFFERSON	12	22

SHEET NO. 7
10 SHEETS

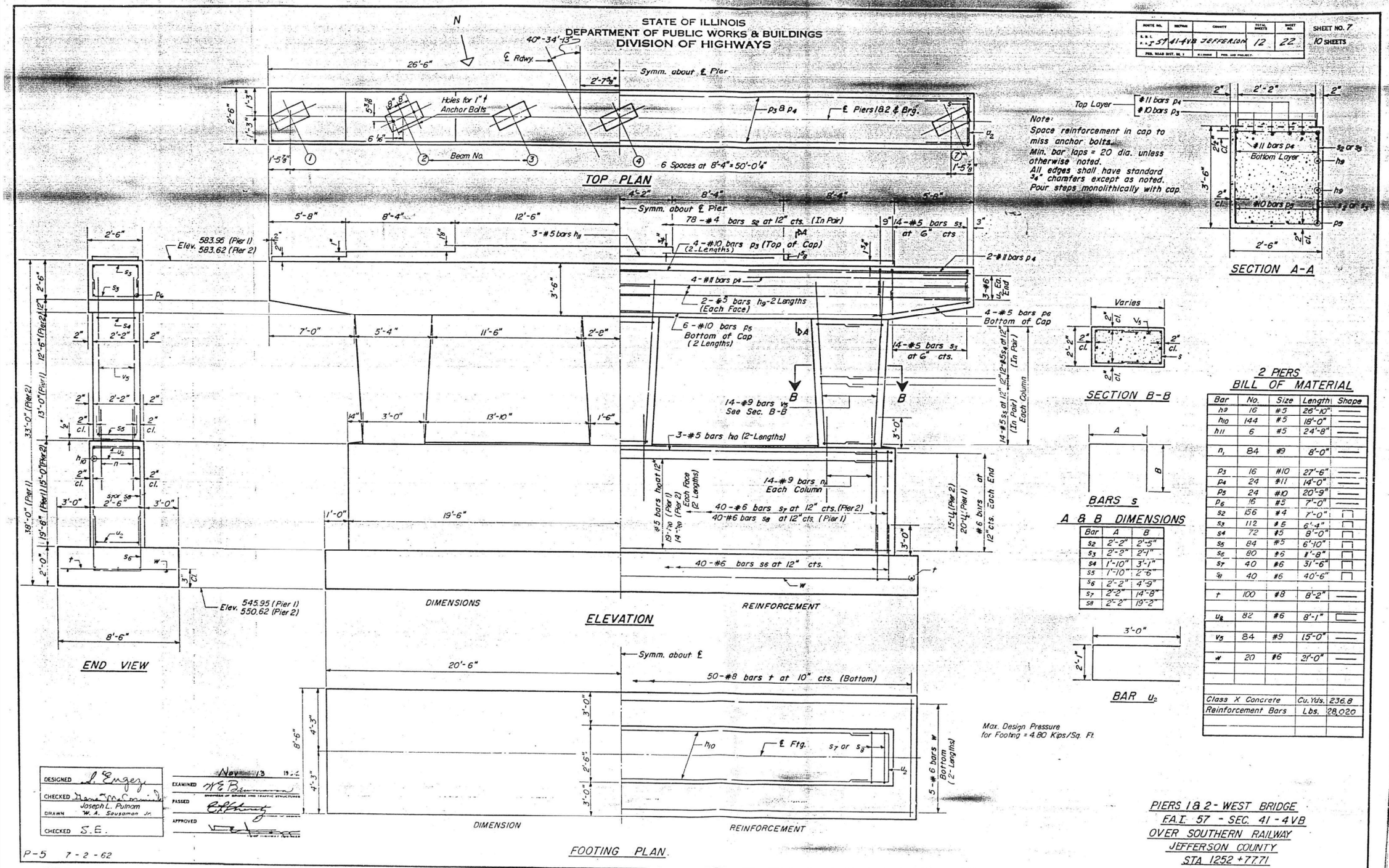

2 PIERS BILL OF MATERIAL

Bar	No.	Size	Length	Shape
h9	16	#5	26'-10"	
h10	144	#5	18'-0"	
h11	6	#5	24'-8"	
n1	84	#9	8'-0"	
p3	16	#10	27'-6"	
p4	24	#11	14'-0"	
p5	24	#10	20'-9"	
p6	16	#5	7'-0"	
s2	156	#4	7'-0"	
s3	112	#5	6'-4"	
s4	72	#5	8'-0"	
s5	84	#5	6'-10"	
s6	80	#6	8'-8"	
s7	40	#6	31'-6"	
s8	40	#6	40'-6"	
t	100	#8	8'-2"	
u2	82	#6	8'-1"	
v5	84	#9	15'-0"	
w	20	#6	21'-0"	
Class X Concrete			Cu. Yds.	236.8
Reinforcement Bars			Lbs.	28,020

Bar	A	B
s2	2'-2"	2'-5"
s3	2'-2"	2'-1"
s4	1'-10"	3'-1"
s5	1'-10"	2'-6"
s6	2'-2"	4'-9"
s7	2'-2"	14'-8"
s8	2'-2"	19'-2"

DESIGNED	J. Engey	
CHECKED	Joseph L. Pulnam	
DRAWN	W. A. Sausaman Jr.	
CHECKED	S.E.	

Nov 13 19 62
EXAMINED W. E. Baumann
PASSED
APPROVED

P-5 7-2-62

PIERS 1 & 2 - WEST BRIDGE
F.A.I. 57 - SEC. 41-4VB
OVER SOUTHERN RAILWAY
JEFFERSON COUNTY
STA 1252 + 77.71

MODEL: PLOT
FILE NAME: Y:\DOT\11129>-11_78550\CADD\Highway\CADD Sheets\09785SO-sht-rem208.dgn

ESCA CONSULTANTS, INC.

USER NAME = skm	DESIGNED - JMK	REVISED -	
ESCA PROJECT NO. 1295.11	DRAWN - JMK	REVISED -	
PLOT SCALE = 0.1667 ' / in.	CHECKED - ELH	REVISED -	
PLOT DATE = 12/23/2020	DATE - 11/20	REVISED -	

STATE OF ILLINOIS
DEPARTMENT OF TRANSPORTATION

SN 041-0016 / 0017 BRIDGE PLANS
FOR INFORMATION ONLY

SCALE: NONE | SHEET NO. 8 OF 8 SHEETS | STA. | TO STA.

F.A.I. RTE.	SECTION	COUNTY	TOTAL SHEETS	SHEET NO.
57	(41-4)B-1;(41-4)B-2	JEFFERSON	257	200

CONTRACT NO. 78550
ILLINOIS | FED. AID PROJECT