Added 7-12-10

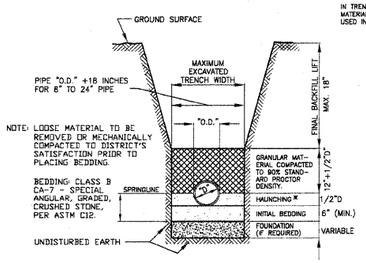

MODIFIED TYPE 5 LAYING CONDITION PER ANSI/AWWA C150/A21.50

CLAY, RCP & DIP PIPE BEDDING DETAIL

CONTRACTOR SHALL USE REASONABLE CARE WHILE BACKFILLING OVER THE SEWER. NO MATERIALS SUCH AS ROCKS OR BOULDERS SHALL BE ALLOWED DIRECTLY ON THE SEWER PIPE UNLESS A MIN. OF 24" OF SELECT OR GRANULAR BACKFILL HAS BEEN PLACED ABOVE THE CROWN OF THE PIPE.

IN TRENCHES NOT REQUIRING SELECT TRENCH BACKFILL, NO EXCAVATED MATERIAL LARGER THAN EIGHT INCHES (8") IN ANY DIMENSION SHALL BE USED IN THE BACKFILL.

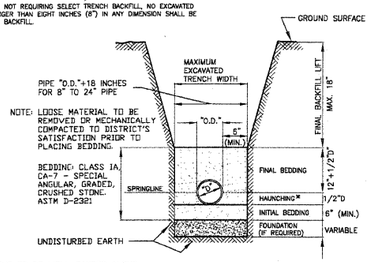

*HAUNCHING TO BE WELL-TAMPED ALONG PIPE TO INSURE VOIDS ARE ELIMINATED

PVC PIPE BEDDING DETAIL

STONE RIP-RAP SHALL BE GRADATION RR4, (16" MIN. THICKNESS) UNLESS SPECIFIED OTHERWISE, WITH GRADATION RR4 BEDDING (6" MIN. THICKNESS) PER IDOT SECTION 281. RIP RAP TO BE IMMEDIATELY INSTALLED AFTER COMPLETION OF BACKFILLING AND SILT FENCE AFTER RIP RAP INSTALLATION.

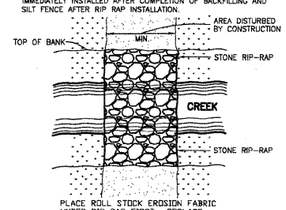

STONE RIP-RAP DETAIL

TYPICAL

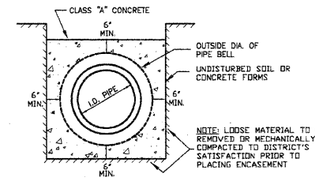

ENCASEMENT DETAIL

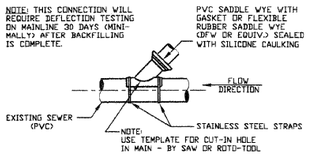

CUT-IN CONNECTION DETAIL (PVC PIPE)

PLAN VIEW

SEE SERVICE & SERVICE CLEANOUT RISER DETAIL

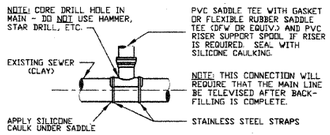

CUT-IN CONNECTION DETAIL (CLAY PIPE)

PROFILE VIEW

SEE SERVICE & SERVICE CLEANOUT RISER DETAIL

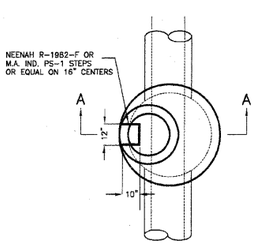

MANHOLE DETAIL - PLAN

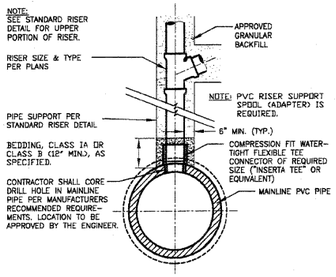

SERVICE CONNECTION FOR PVC TRUNK SEWER

FOR PIPE 18" IN DIA. OR LARGER

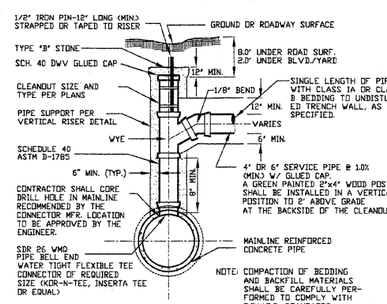

SERVICE CONNECTION DETAIL FOR RCP

NO SCALE

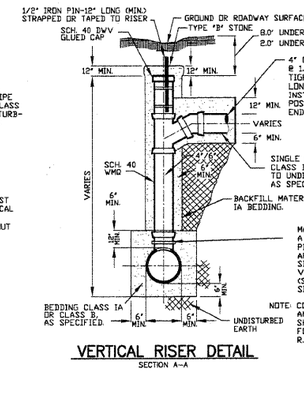

VERTICAL RISER DETAIL

SECTION A-A

NOTES:

MANHOLE FRAME AND COVER SHALL BE A NEENAH R-1670 OR EAST JORDAN E 1117 NON-ROCKING-SELF-SEALING LID OR EQUAL UNLESS OTHERWISE NOTED

THE LID SHALL HAVE 2" HIGH "SANITARY" LETTERING AND A CONCEALED PICK HOLE.

ALL ADJUSTMENT RING JOINTS SHALL BE SEALED WITH (2) 1" BEADS OF E-Z STIK, KENT SEAL OR EQUIVALENT, INCLUDING CAST IRON FRAME TO CONCRETE MANHOLE STRUCTURE.

2" CONCRETE RINGS ALLOWED ONLY IN CITY OF ROCKFORD ALL OTHER 2" RINGS MUST BE DISTRICT APPROVED (GNR TECHNOLOGIES, EAST JORDAN IRON WORKS) OR EQUAL RUBBER ADJUSTMENT RISER.

DISTRICT APPROVED EXTERNAL MANHOLE BARREL SECTION JOINT SEAL. (WET AREAS ONLY)

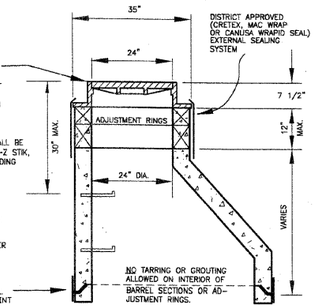

NOTES:

A MAXIMUM OF 12" MINIMUM OF 4" (NOT REQUIRED IN TURF OR CURB & GUTTER ROAD). ONLY (1) - 2" ADJUSTMENT RING PER MANHOLE

WHEN A CASTING REQUIRES PITCHING, A MINIMUM OF THREE SHIMS (PLASTIC OR METAL) EQUALLY SPACED TO PREVENT ROCKING SHALL BE INSTALLED BETWEEN THE CASTING AND THE MASONRY. HYDRAULIC CEMENT SHALL BE PLACED TO FILL THE ENTIRE SPACE BETWEEN THE CASTING & MASONRY.

PRE-CAST FLAT TOPS WILL NOT BE PERMITTED ON 4' OR 5' DIAMETER MANHOLES

IF ABOVE REQUIREMENTS CANNOT BE MET, NEW BARREL SECTIONS OR CORBELS WILL BE REQUIRED.

SANITARY MANHOLE ADJUSTMENT DETAIL

NO SCALE

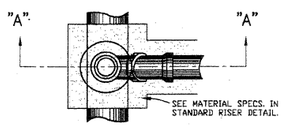

PLAN VIEW (RISER DETAIL)

MINIMUM MANHOLE DIAMETERS		
PIPE SIZE	MIN. DIAMETER	MIN. WALL THICKNESS
8" - 18"	4'	5"
18" - 24"	5'	6"
24" - 36"	6'	7"
(OR AS DIRECTED BY THE DISTRICT)		

NOTE: THE MAXIMUM DROP FROM THE INVERT OF ANY PIPE IN A MANHOLE TO THE FIGURED CHANNEL UNDER THAT PIPE SHALL BE 8'.

NOTE: MANHOLES LOCATED OUTSIDE PUBLIC RIGHT-OF-WAY MUST BE MARKED WITH A METAL FENCE POST

ALL NEW MANHOLES SHALL BE VACUUM TESTED PER ASTM C 1244 PRIOR TO PLACING INTO SERVICE. EXISTING MH'S WILL NOT REQUIRE VACUUM TESTING.

12" MAX., ONLY (1) - 2" ADJUSTMENT RING PER MANHOLE
NOTE: 4" ADJUSTMENT RING NOT REQUIRED IN TURF AREA OR CURB AND GUTTER ROADWAYS

NOTES:

ALL ADJUSTMENT RING JOINTS SHALL BE SEALED WITH (2) 1" BEADS OF E-Z STIK, KENT SEAL OR EQUIVALENT, INCLUDING CAST IRON FRAME TO CONCRETE MANHOLE STRUCTURE.

ALL BARREL JOINTS SHALL BE SEALED WITH 3 1/2"x 3/8" E-Z STIK, KENT SEAL OR EQUIVALENT ON THE SHIP LAP. IN WET AREAS AN ADDITIONAL 1" BEAD OF E-Z STIK, KENT SEAL OR EQUIVALENT WILL BE REQUIRED ON THE LOWER HORIZONTAL PORTION OF THE SHIP LAP.

MANHOLE STRUCTURE TO BE CONSTRUCTED OF PRE-CAST REINFORCED CONCRETE MANHOLE RISER PIPE. MANHOLE CONSTRUCTION SHALL CONFORM TO A.S.T.M. C478-90 OR LATEST DESIGNATION.

WHEN A CASTING REQUIRES PITCHING, A MINIMUM OF THREE SHIMS (PLASTIC OR METAL) EQUALLY SPACED TO PREVENT ROCKING SHALL BE INSTALLED BETWEEN THE CASTING AND THE MASONRY. HYDRAULIC CEMENT SHALL BE PLACED TO FILL THE SPACE BETWEEN THE CASTING & MASONRY.

PRE-CAST FLAT TOPS WILL NOT BE PERMITTED ON DISTRICT MANHOLES

PIPE CONNECTION TO PROPOSED MANHOLE SHALL BE MADE WATER-TIGHT BY MEANS OF RUBBER GASKET SEAL (A-LOK OR EQUAL.), CONFORMING TO A.S.T.M. F-477, CAST INTEGRALLY IN MANHOLE WALL OR RUBBER GASKET SEAL AND STAINLESS STEEL CLAMP CONFORMING TO A.S.T.M. C-923.

PIPE CONNECTION TO EXISTING MANHOLE SHALL BE MADE WATER-TIGHT BY MEANS OF RUBBER GASKET SEAL AND STAINLESS STEEL CLAMP, CONFORMING TO A.S.T.M. C-923, PSX SERIES SIX OR EQUAL. PIPE ACCESS SHALL BE MADE BY CORE DRILLING MANHOLE WALL.

PSX SERIES GASKETS ARE NOT PERMITTED ON MH OPENINGS OVER 20' DEEP. MH OPENINGS OVER 20' DEEP SHALL REQUIRE A-LOK TO MANHOLE GASKET.

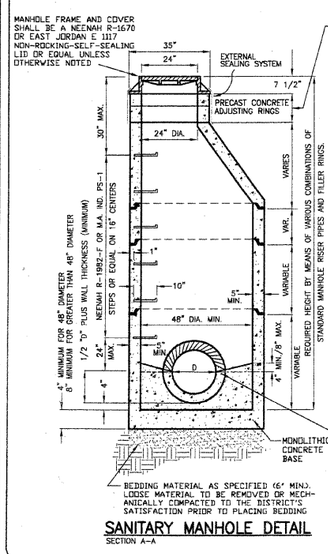

SANITARY MANHOLE DETAIL

SECTION A-A

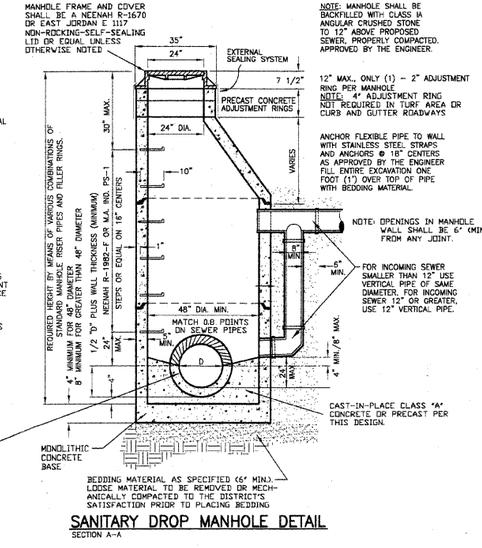

NOTE: MANHOLE SHALL BE BACKFILLED WITH CLASS IA ANGULAR CRUSHED STONE TO 12" ABOVE PROPOSED SEWER, PROPERLY COMPACTED. APPROVED BY THE ENGINEER.

12" MAX., ONLY (1) - 2" ADJUSTMENT RING PER MANHOLE
NOTE: 4" ADJUSTMENT RING NOT REQUIRED IN TURF AREA OR CURB AND GUTTER ROADWAYS

ANCHOR FLEXIBLE PIPE TO WALL WITH STAINLESS STEEL STRAPS AND ANCHORS @ 18" CENTERS AS APPROVED BY THE ENGINEER FILL ENTIRE EXCAVATION ONE FOOT (1') OVER TOP OF PIPE WITH BEDDING MATERIAL.

NOTE: OPENINGS IN MANHOLE WALL SHALL BE 6" (MIN.) FROM ANY JOINT.

FOR INCOMING SEWER SMALLER THAN 12" USE VERTICAL PIPE OF SAME DIAMETER. FOR INCOMING SEWER 12" OR GREATER, USE 12" VERTICAL PIPE.

CAST-IN-PLACE CLASS "A" CONCRETE OR PRECAST PER THIS DESIGN.

SANITARY DROP MANHOLE DETAIL

SECTION A-A

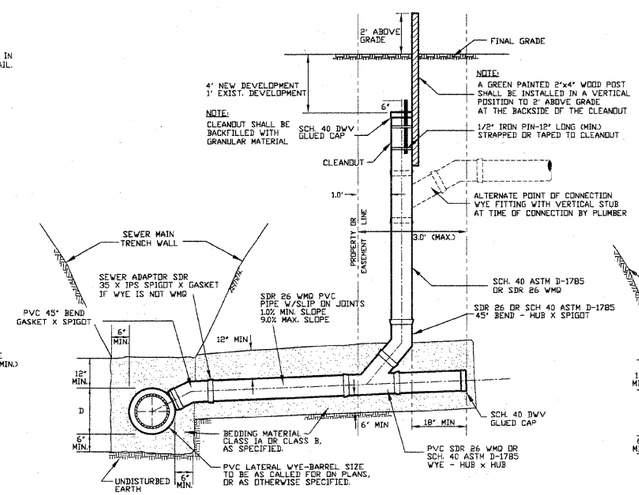

SERVICE & SERVICE CLEANOUT RISER

NO SCALE

NOTE: SANITARY SERVICES REQUIRED TO EXTEND MAX. 3' BEYOND R.O.W. LINE

ALL SCHEDULE 40 PVC PIPE AND FITTINGS SHALL MEET THE REQUIREMENTS OF ASTM D1785/D2665. ALL WMQ SDR 26 PVC PIPE AND FITTINGS SHALL MEET THE REQUIREMENTS OF ASTM D2241 AND D3139.
ALL DWV FITTINGS SHALL BE CLEANED, PRIMED AND GLUED.

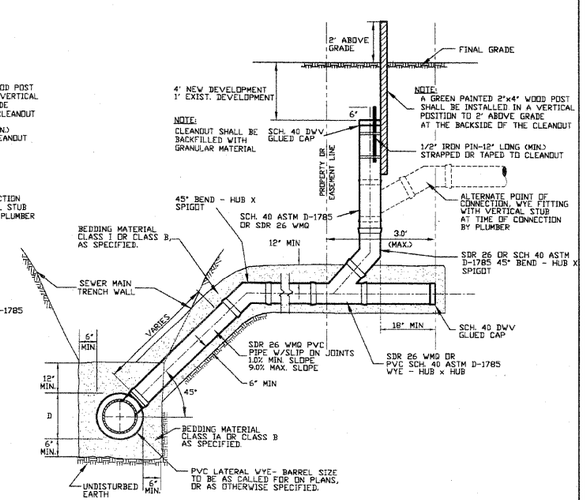

ALTERNATE SERVICE RISER DETAIL (WITH SERVICE CLEANOUT)

NO SCALE

NOTE: SANITARY SERVICES REQUIRED TO EXTEND MAX. 3' BEYOND R.O.W. LINE

ALL SCHEDULE 40 PVC PIPE AND FITTINGS SHALL MEET THE REQUIREMENTS OF ASTM D1785/D2665. ALL WMQ SDR 26 PVC PIPE AND FITTINGS SHALL MEET THE REQUIREMENTS OF ASTM D2241 AND D3139.
ALL DWV FITTINGS SHALL BE CLEANED, PRIMED AND GLUED.

ROCK RIVER WATER RECLAMATION DISTRICT
3501 KISHWAUKEE ST., P.O. BOX 7480, ROCKFORD, ILLINOIS 61126-7480 - PH. (815) 387-7660/FAX (815) 387-7665

REVISED: 5/19/09 PAD

STANDARD DETAIL SHEET

FILE: DETAIL SHT_09.DWG

SHEET OF