F.A.P. RTE.	SECTION	COUNTY	TOTAL SHEETS	SHEET NO.
310	60-16-1, 42-1	JERSEY	481	202
STA.		TO STA.		
FED. ROAD DIST. NO.	ILLINOIS	FED. AID PROJECT		

CONTRACT NO. 76318

℄ BEAM 12

Location	Station	Offset	Theoretical Grade Elevation	Theoretical Grade Elevation Adjusted For Dead Load Deflections
Bk. S. Abut.	317+35.74	44.063	482.868	482.868
CL S. Abut.	317+36.99	44.063	482.861	482.861
A	317+46.99	44.063	482.807	482.822
B	317+56.99	44.063	482.760	482.788
C	317+66.99	44.063	482.720	482.754
D	317+76.99	44.063	482.687	482.719
E	317+86.99	44.063	482.661	482.686
F	317+96.99	44.063	482.642	482.652
CL Brg Pier 1	318+02.91	44.063	482.635	482.635
CL Pier 1	318+03.66	44.063	482.634	482.634
CL Brg Pier 1	318+04.41	44.063	482.633	482.633
G	318+13.66	44.063	482.627	482.664
H	318+23.66	44.063	482.627	482.704
I	318+33.66	44.063	482.634	482.733
J	318+43.66	44.063	482.649	482.761
K	318+53.66	44.063	482.670	482.783
L	318+63.66	44.063	482.698	482.797
M	318+73.66	44.063	482.734	482.811
N	318+83.66	44.063	482.776	482.813
CL Brg Pier 2	318+92.91	44.063	482.822	482.822
CL Pier 2	318+93.66	44.063	482.826	482.826
CL Brg Pier 2	318+94.41	44.063	482.830	482.830
O	319+03.66	44.063	482.882	482.897
P	319+13.66	44.063	482.946	482.974
Q	319+23.66	44.063	483.017	483.051
R	319+33.66	44.063	483.095	483.127
S	319+43.66	44.063	483.179	483.206
T	319+53.66	44.063	483.271	483.282
CL N. Abut.	319+60.33	44.063	483.337	483.337
Bk. N. Abut.	319+61.58	44.063	483.349	483.349

℄ BEAM 13

Location	Station	Offset	Theoretical Grade Elevation	Theoretical Grade Elevation Adjusted For Dead Load Deflections
Bk. S. Abut.	317+35.74	50.771	482.754	482.754
CL S. Abut.	317+36.99	50.771	482.747	482.747
A	317+46.99	50.771	482.693	482.708
B	317+56.99	50.771	482.646	482.674
C	317+66.99	50.771	482.606	482.640
D	317+76.99	50.771	482.573	482.605
E	317+86.99	50.771	482.547	482.572
F	317+96.99	50.771	482.528	482.538
CL Brg Pier 1	318+02.91	50.771	482.521	482.521
CL Pier 1	318+03.66	50.771	482.520	482.520
CL Brg Pier 1	318+04.41	50.771	482.519	482.519
G	318+13.66	50.771	482.513	482.550
H	318+23.66	50.771	482.513	482.590
I	318+33.66	50.771	482.520	482.619
J	318+43.66	50.771	482.535	482.647
K	318+53.66	50.771	482.556	482.669
L	318+63.66	50.771	482.584	482.683
M	318+73.66	50.771	482.620	482.697
N	318+83.66	50.771	482.662	482.699
CL Brg Pier 2	318+92.91	50.771	482.708	482.708
CL Pier 2	318+93.66	50.771	482.712	482.712
CL Brg Pier 2	318+94.41	50.771	482.716	482.716
O	319+03.66	50.771	482.768	482.783
P	319+13.66	50.771	482.832	482.860
Q	319+23.66	50.771	482.903	482.937
R	319+33.66	50.771	482.981	483.013
S	319+43.66	50.771	483.065	483.092
T	319+53.66	50.771	483.157	483.168
CL N. Abut.	319+60.33	50.771	483.222	483.222
Bk. N. Abut.	319+61.58	50.771	483.235	483.235

℄ BEAM 14

Location	Station	Offset	Theoretical Grade Elevation	Theoretical Grade Elevation Adjusted For Dead Load Deflections
Bk. S. Abut.	317+35.74	57.479	482.614	482.614
CL S. Abut.	317+36.99	57.479	482.607	482.607
A	317+46.99	57.479	482.553	482.569
B	317+56.99	57.479	482.506	482.534
C	317+66.99	57.479	482.466	482.501
D	317+76.99	57.479	482.433	482.465
E	317+86.99	57.479	482.407	482.433
F	317+96.99	57.479	482.389	482.398
CL Brg Pier 1	318+02.91	57.479	482.381	482.381
CL Pier 1	318+03.66	57.479	482.380	482.380
CL Brg Pier 1	318+04.41	57.479	482.379	482.379
G	318+13.66	57.479	482.373	482.410
H	318+23.66	57.479	482.373	482.450
I	318+33.66	57.479	482.381	482.479
J	318+43.66	57.479	482.395	482.507
K	318+53.66	57.479	482.416	482.529
L	318+63.66	57.479	482.444	482.543
M	318+73.66	57.479	482.480	482.557
N	318+83.66	57.479	482.522	482.559
CL Brg Pier 2	318+92.91	57.479	482.568	482.568
CL Pier 2	318+93.66	57.479	482.572	482.572
CL Brg Pier 2	318+94.41	57.479	482.576	482.576
O	319+03.66	57.479	482.629	482.643
P	319+13.66	57.479	482.692	482.720
Q	319+23.66	57.479	482.763	482.797
R	319+33.66	57.479	482.841	482.873
S	319+43.66	57.479	482.926	482.952
T	319+53.66	57.479	483.018	483.028
CL N. Abut.	319+60.33	57.479	483.083	483.083
Bk. N. Abut.	319+61.58	57.479	483.095	483.095

Note:
All offsets in the table are measured from the ℄ of FAP 310.

Work this sheet with sheets 16 and 17 of 35.

DESIGNED	M.E.B.
CHECKED	R.K.M.
DRAWN	P.W.S.
CHECKED	M.E.B.-R.K.M.

TOP OF SLAB ELEVATIONS
NORTHBOUND LANES
FAP-310
SECTION 60-16-1, 42-1
JERSEY COUNTY
STATION 318+48.66
STRUCTURE NO. 042-0027 (N.B.)

HR
HURST-ROSCHE ENGINEERS, INC.
601 NORTH BRUNS LANE
SPRINGFIELD, IL 62702
(217)-787-1199
FAX (217)-793-1199

RTE.	SECTION	COUNTY	SHEETS	NO.
310	60-16-1, 42-1	JERSEY	481	203
STA.		TO STA.		
FED. ROAD DIST. NO.	ILLINOIS	FED. AID PROJECT		

Sheet 19 of 35 Sheets

CONTRACT NO. 76318

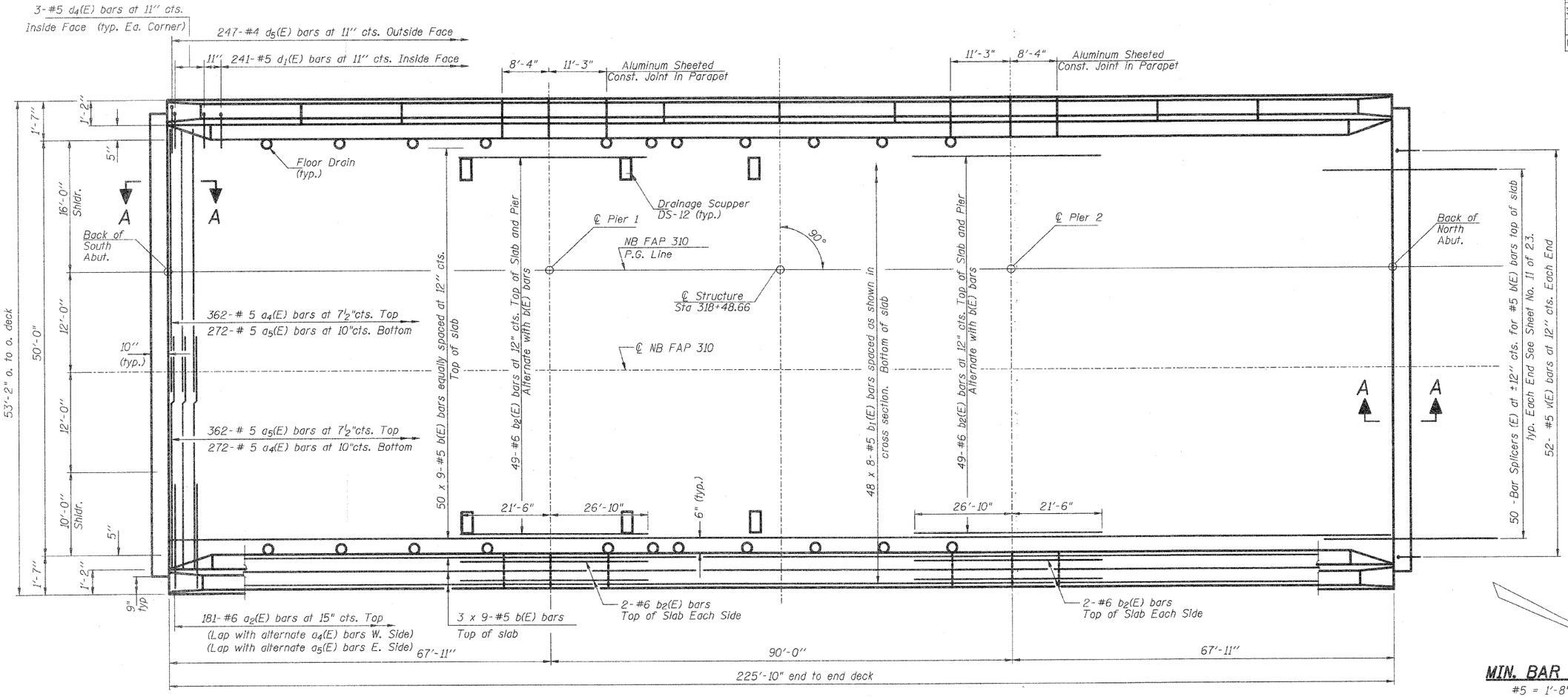

PLAN

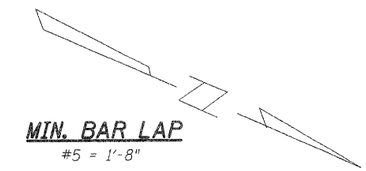

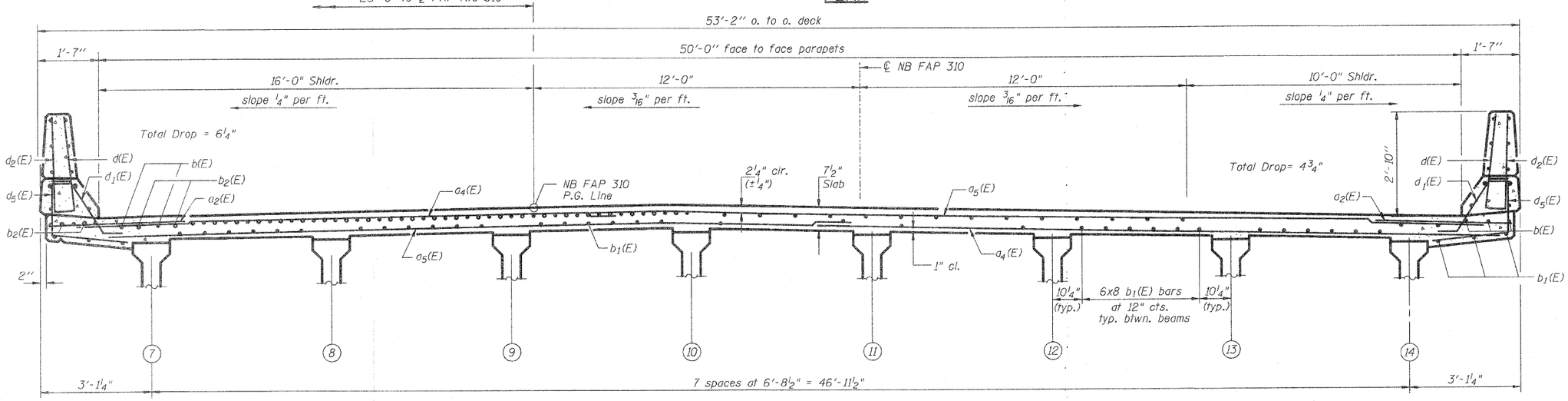

NEAR PIER — CROSS SECTION (Looking North) — NEAR MIDSPAN

Notes:
See sheet 20 of 35 for superstructure details and Bill of Material.
Bars indicated thus 20 x 3-#5 etc. indicates 20 lines of bars with 3 lengths per line.
All edges shall have ¾" chamfer except as noted.
For sections A-A see Sheet 21 of 35.
See sheet 1 of 35 for floor drains and drainage scuppers exact locations.
See Sheets 20 and 21 of 35 for floor drains and drainage scuppers details.

DESIGNED	R.K.M.
CHECKED	M.E.B.
DRAWN	P.W.S.
CHECKED	M.E.B.-R.K.M.

SUPERSTRUCTURE NORTHBOUND LANES FAP-310 SECTION 60-16-1, 42-1 JERSEY COUNTY STATION 318+48.66 STRUCTURE NO. 042-0027 (N.B.)

HURST - ROSCHE ENGINEERS, INC.
601 NORTH BRUNS LANE
SPRINGFIELD, IL 62702
(217)-787-1199
FAX (217)-793-1199

RTE.	SECTION	COUNTY	SHEETS	NO.
310	60-16-1, 42-1	JERSEY	481	204
STA.		TO STA.		
FED. ROAD DIST. NO.	ILLINOIS	FED. AID PROJECT		

Sheet 20 of 35 Sheets

CONTRACT NO. 76318

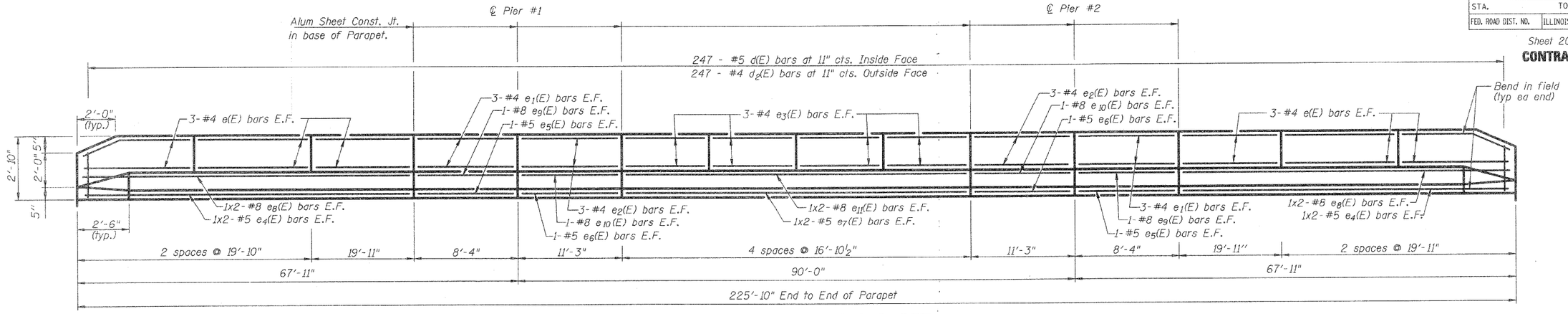

INSIDE ELEVATION OF PARAPET

West Parapet (Looking West)
East Parapet similar by rotation of 180°

MIN. BAR LAP

#4 = 1'-4"
#5 = 1'-8"
#6 = 2'-0"
#8 = 3'-5"

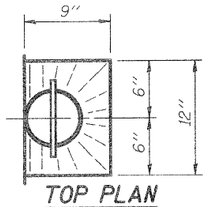

TOP PLAN

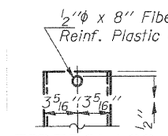

FIBERGLASS PIPE

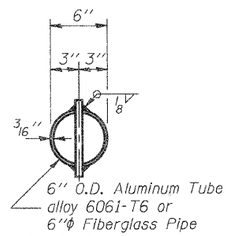

TOP PLAN

(Showing Aluminum Tube)

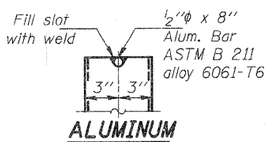

ALUMINUM TUBE

Fiberglass pipe shall conform to ASTM D2996, with short-time rupture strength hoop tensile stress of 30,000 p.s.i. minimum.

The exterior surfaces of the floor drains shall be coated or pigmented by the manufacturer with a color that matches the concrete.

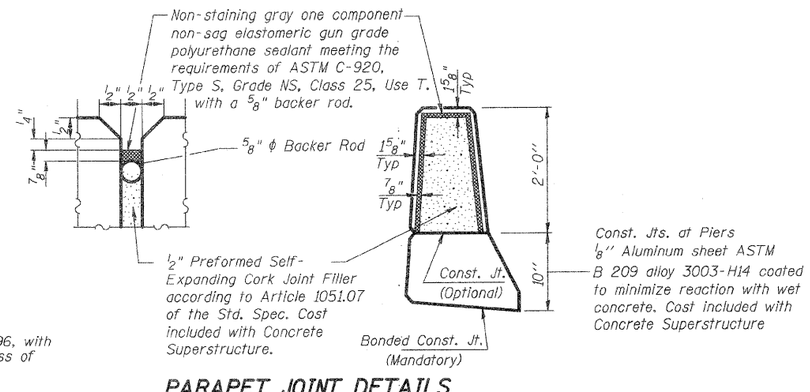

PARAPET JOINT DETAILS

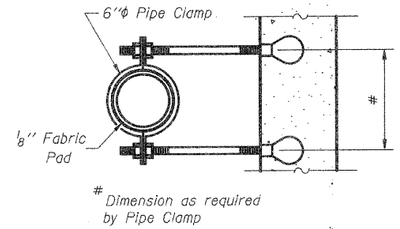

Dimension as required by Pipe Clamp

SECTION C-C

The clamping device and inserts shall be galvanized according to AASHTO M 232.

Note:
Bars indicated thus 20 x 3-#5 etc. indicates 20 lines of bars with 3 lengths per line.

Locate drains to clear permanent bracing.

SUPERSTRUCTURE BILL OF MATERIAL

Bar	No.	Size	Length	Shape
a_2(E)	362	#6	6'-0"	
a_3(E)	48	#5	2'-0"	
a_4(E)	634	#5	25'-1"	
a_5(E)	634	#5	29'-1"	
b(E)	504	#5	26'-7"	
b_1(E)	384	#5	29'-8"	
b_2(E)	106	#6	48'-4"	
d(E)	494	#5	3'-0"	
d_1(E)	482	#5	2'-5"	
d_2(E)	494	#4	3'-0"	
d_4(E)	12	#5	2'-5"	
d_5(E)	494	#4	3'-6"	
e(E)	72	#4	19'-8"	
e_1(E)	24	#4	8'-0"	
e_2(E)	24	#4	10'-11"	
e_3(E)	48	#4	16'-8"	
e_4(E)	16	#5	30'-6"	
e_5(E)	8	#5	8'-0"	
e_6(E)	8	#5	10'-11"	
e_7(E)	8	#5	34'-5"	
e_8(E)	16	#8	31'-4"	
e_9(E)	8	#8	8'-0"	
e_{10}(E)	8	#8	10'-11"	
e_{11}(E)	8	#8	35'-4"	
m_3(E)	4	#6	1'-10"	
m_5(E)	12	#8	5'-10"	
m_6(E)	4	#8	3'-8"	
m_7(E)	32	#6	10'-4"	
m_8(E)	20	#6	28'-3"	
m_9(E)	42	#6	4'-6"	
m_{10}(E)	56	#4	5'-9"	
s(E)	96	#4	11'-8"	
s_1(E)	96	#5	6'-0"	
s_2(E)	70	#4	11'-10"	
v(E)	104	#5	3'-0"	
Reinforcement Bars (Epoxy Coated)			Lbs.	84,990
Concrete Superstructure			Cu. Yds.	435.9

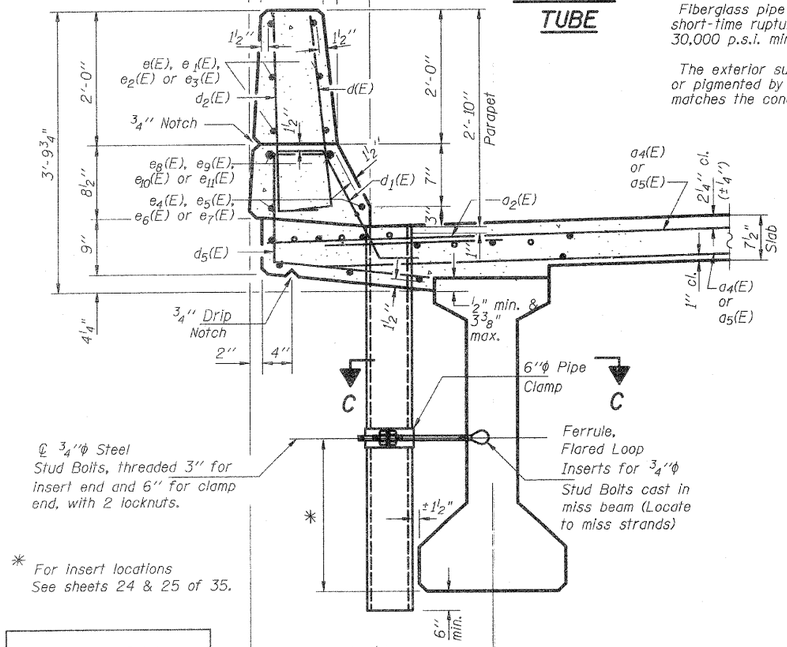

* For insert locations See sheets 24 & 25 of 35.

SECTION THRU PARAPET

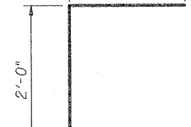

BAR v(E)

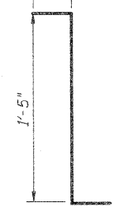

BAR d4(E)

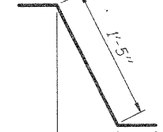

BAR d1(E)

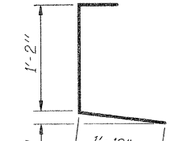

BAR d5(E)

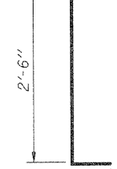

BARS d(E) & d2(E)

DESIGNED	R.K.M.
CHECKED	M.E.B.
DRAWN	P.W.S.
CHECKED	M.E.B.-R.K.M.

SUPERSTRUCTURE DETAILS
NORTHBOUND LANES
FAP-310
SECTION 60-16-1, 42-1
JERSEY COUNTY
STATION 318+48.66
STRUCTURE NO. 042-0027 (N.B.)

HURST - ROSCHE ENGINEERS, INC.
601 NORTH BRUNS LANE
SPRINGFIELD, IL 62702
(217)-787-1199
FAX (217)-793-1199

ROUTE	SECTION	COUNTY	TOTAL SHEETS	SHEET NO.
310	60-16-1, 42-1	JERSEY	481	205
STA.		TO STA.		
FED. ROAD DIST. NO.	ILLINOIS	FED. AID PROJECT		

Sheet 21 of 35 Sheets

CONTRACT NO. 76318

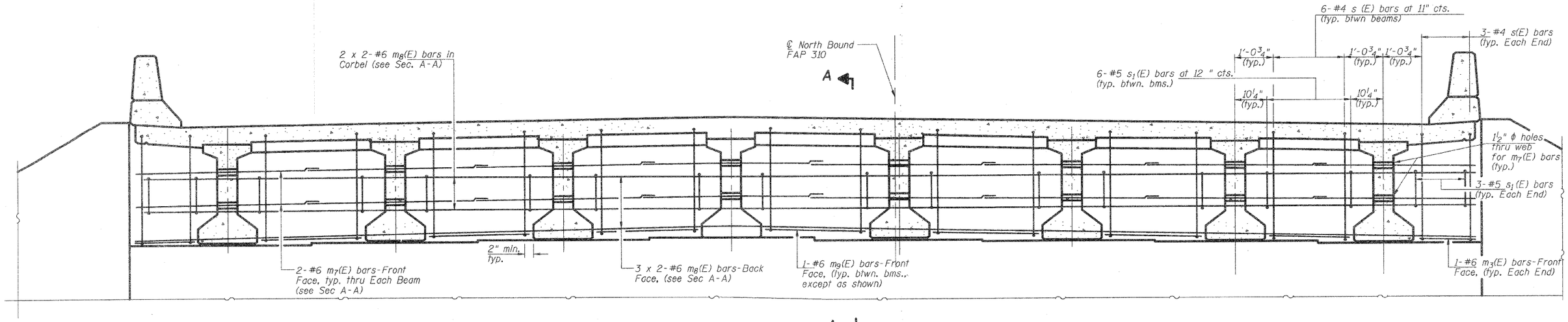

ABUTMENT DIAPHRAGM ELEVATION

North Abutment (Looking North)
(South Abutment similar by rotation of 180°)

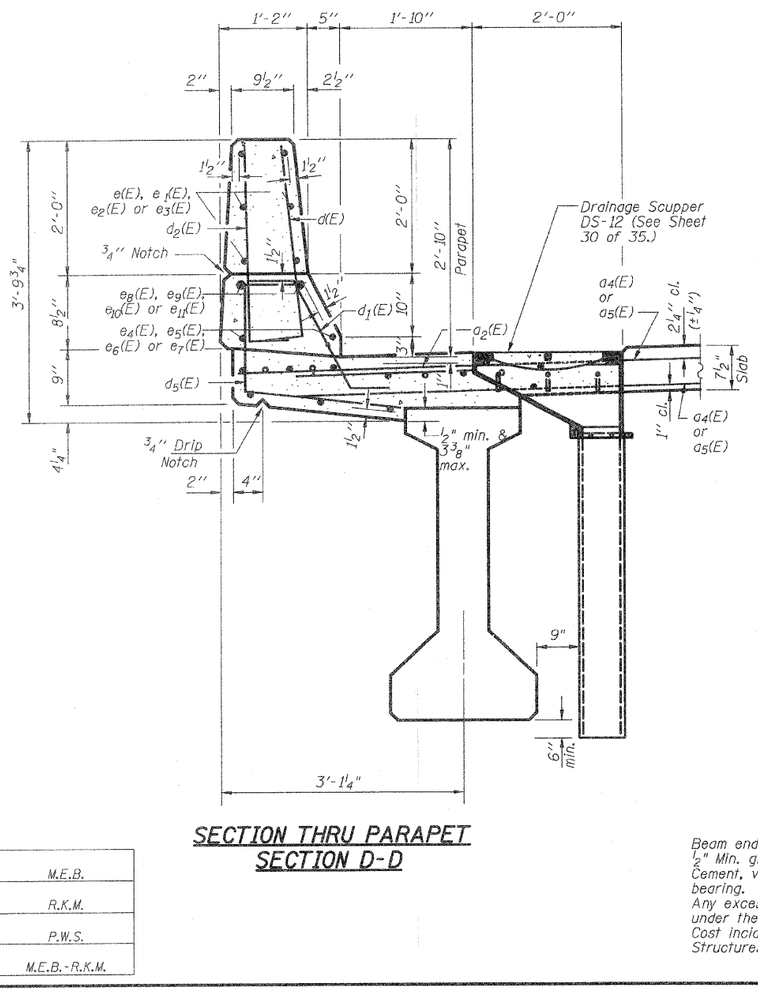

SECTION THRU PARAPET
SECTION D-D

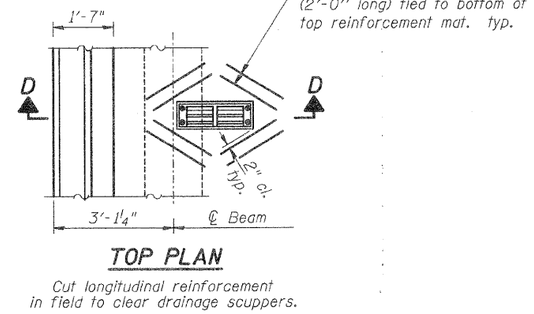

TOP PLAN

Cut longitudinal reinforcement in field to clear drainage scuppers.

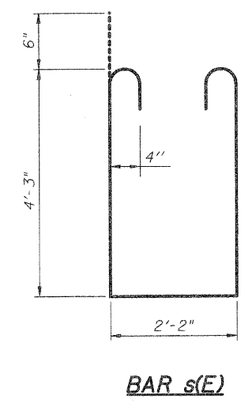

BAR s(E)

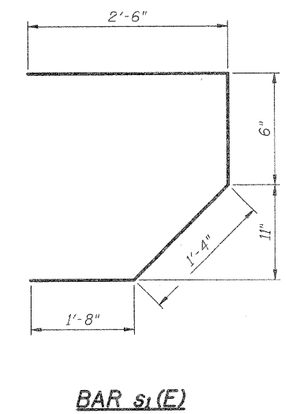

BAR s1(E)

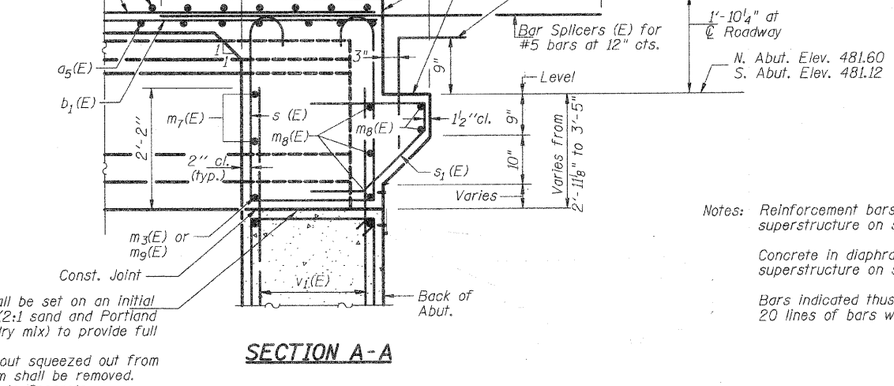

SECTION A-A

Beam ends shall be set on an initial ½" Min. grout (2:1 sand and Portland Cement, very dry mix) to provide full bearing.
Any excess grout squeezed out from under the beam shall be removed.
Cost incidental to Concrete Structures.

Notes: Reinforcement bars in diaphragm are billed with superstructure on sheet 20 of 35.

Concrete in diaphragm is included with Concrete superstructure on sheet 20 of 35.

Bars indicated thus 20 x 3-#5 etc. indicates 20 lines of bars with 3 lengths per line.

MIN. BAR LAP

#6 bar = 3'-7"

ABUTMENT DIAPHRAGM DETAILS
NORTHBOUND LANES
FAP-310
SECTION 60-16-1, 42-1
JERSEY COUNTY
STATION 318+48.66
STRUCTURE NUMBER 042-0027 (N.B.)

DESIGNED	M.E.B.
CHECKED	R.K.M.
DRAWN	P.W.S.
CHECKED	M.E.B.-R.K.M.

HURST - ROSCHE ENGINEERS, INC.
601 NORTH BRUNS LANE
SPRINGFIELD, IL 62702
(217)-787-1199
FAX (217)-793-1199

RTE.	SECTION	COUNTY	SHEETS	NO.
310	60-16-1, 42-1	JERSEY	481	206
STA.		TO STA.		
FED. ROAD DIST. NO.	ILLINOIS	FED. AID PROJECT		

Sheet 22 of 35 Sheets

CONTRACT NO. 76318

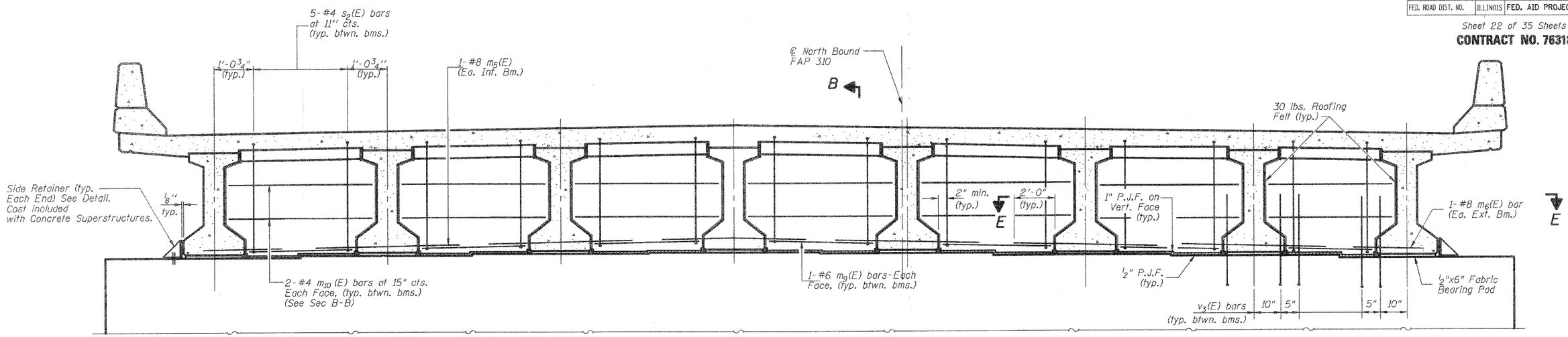

*Cost of Roofing felt is included with Concrete Superstructure.
**Tightly fasten the #8 bars together with No. 9 wire tips.

PIER DIAPHRAGM ELEVATION

Pier #1 & #2 (Looking North)

MIN. BAR LAP

#6 bar = 3'-7"

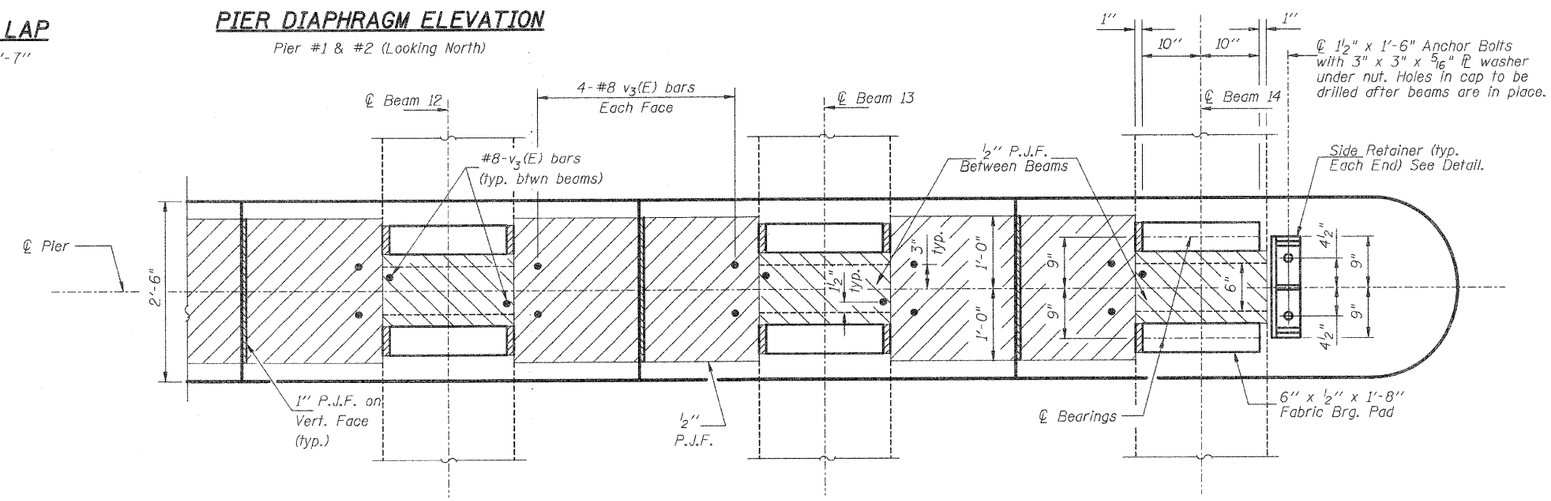

PARTIAL PLAN AT PIER CAP
SECTION E-E

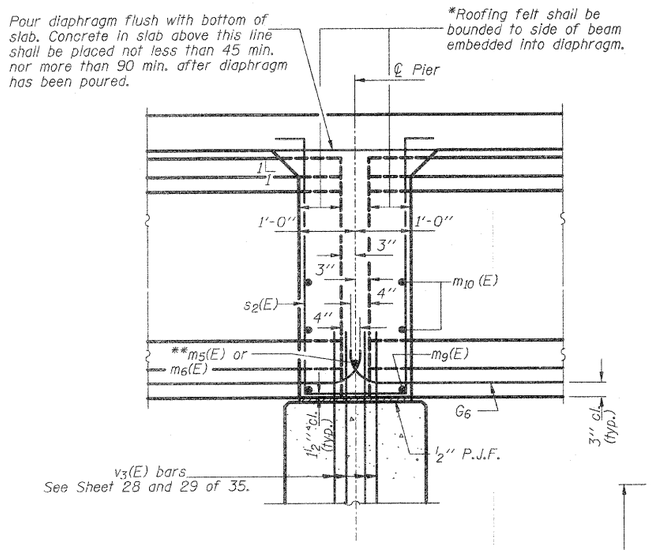

SECTION B-B AT PIERS

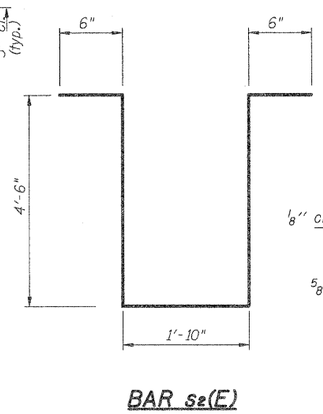

BAR s_2(E)

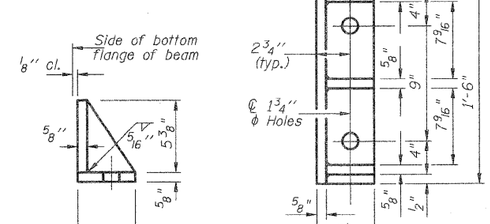

SIDE RETAINER

Notes:

Reinforcement bars in diaphragm are billed with superstructure on sheet 6 of 35.

Concrete in diaphragm is included with Concrete superstructure on sheet 6 of 35.

Equivalent rolled angle with stiffeners will be allowed in lieu of welded plates.

Bars indicated thus 20 x 3-#5 etc. indicates 20 lines of bars with 3 lengths per line.

All side retainers shall be galvanized after shop fabricatino according to AASHTO M 111.

Anchor bolt assemblies shall be galvanized according to Article 1006.09 of the Standard Specifications.

Anchor bolts shall be ASTM F1554 all-thread (or an Engineer-approved alternate material) of the grade(s) and diameter(s) specified. ASTM A307 Grade C anchor bolts may be used in lieu of ASTM F1554 Grade 36 (Fy=36ksi). The corresponding specified grade of AASHTO M314 anchor bolts may be used in lieu of ASTM F1554.

Anchor bolts for side retainers may be either cast in place or installed in holes drilled after the supporting member is in place and prior to pouring the deck.

Drilled and set anchor bolts shall be installed according to Article 521.06 of the Standard Specifications.

Cost of side retainer and anchor bolts shall be included with Concrete Structures.

PIER DIAPHRAGM DETAILS
NORTHBOUND LANES
FAP-310
SECTION 60-16-1, 42-1
JERSEY COUNTY
STATION 318+48.66
STRUCTURE NUMBER 042-0027 (N.B.)

DESIGNED	M.E.B.
CHECKED	R.K.M.
DRAWN	P.W.S.
CHECKED	M.E.B.-R.K.M.

HURST-ROSCHE ENGINEERS, INC.
601 NORTH BRUNS LANE
SPRINGFIELD, IL 62702
(217)-787-1199
FAX (217)-793-1199

F.A.P. RTE.	SECTION	COUNTY	TOTAL SHEETS	SHEET NO.
310	60-16-1, 42-1	JERSEY	481	207
STA.		TO STA.		
FED. ROAD DIST. NO.	ILLINOIS	FED. AID PROJECT		

Sheet 23 of 35 Sheets

CONTRACT NO. 76318

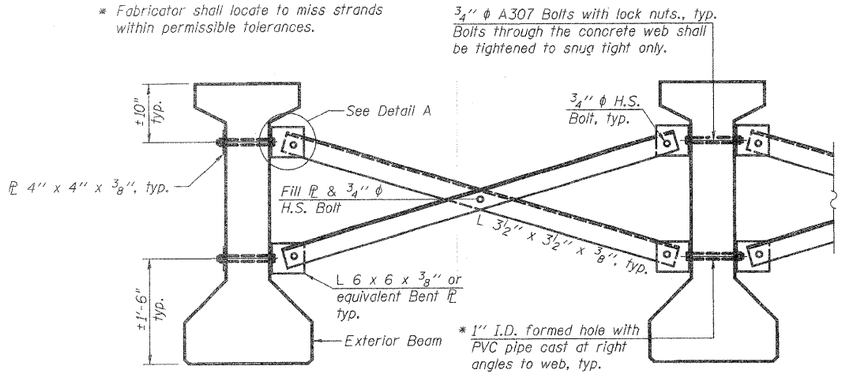

Notes:

All material for bracing shall be hot dip galvanized according to AASHTO M111 unless otherwise noted.

Two hardened washers are required for each set of oversized holes.

All holes shall be 15/16"ϕ unless otherwise noted.

5/16" x 3" x 3" plate washers are required over all slotted holes.

All bolts shall be galvanized according to AASHTO M232.

Bracing shall be installed as beams are erected and tightened as soon as possible during erection.

Permanent bracing shall not be paid for separately, but shall be included in the cost of Furnishing and Erecting Precast Prestressed Concrete I-Beams.

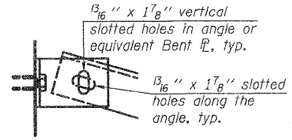

DETAIL A

INTERIOR BEAM MOMENT TABLE STRUCTURE NO. 042-0027 (N.B.)				
		0.4 Sp. #1 or 0.6 Sp. #3	Pier 1 or 2	0.5 Span 2
I	(in^4)	144117		144117
I'	(in^4)	386078		386078
S_b	(in^3)	6834		6834
S_b'	(in^3)	11090		11090
S_t	(in^3)	5355		5355
S_t'	(in^3)	29277		29277
℄	(k/')	1.234		1.234
M ℄	('k)	686		1249
s ℄	(k/')	0.438	0.438	0.438
Ms ℄	('k)	122	278	165
M ℄	('k)	460	431	506
M (Imp)	('k)	120	106	118

INTERIOR BEAM REACTION TABLE STRUCTURE NO. 042-0027 (N.B.)				
		Abuts.	Pier 1 Span 1 Pier 2 Span 3	Pier 1 Span 2 Pier 2 Span 2
R ℄	(k)	42	42	56
Rs ℄	(k)	10	19	19
R ℄	(k)	36	26	26
Imp.	(k)	9	6	6
R (Total)	(k)	97	93	107

I and I' are the moment of inertia and composite moment of inertia of the beam section.

S_b and S_b' are the non-composite and composite section modulus for the bottom fiber of the prestressed beam.

S_t and S_t' are the non-composite and composite section modulus for the top fiber of the prestressed beam.

M ℄ is the moment due to dead loads on the non-composite prestressed beam. It is conservatively calculated at 0.5 of the span.

Ms ℄ is the moment due to dead loads on the composite section.

M ℄ is the moment due to live load on the composite section.

M (Imp) is the moment due to live load impact on the composite section.

R (Total) is the sum of the reaction per bearing due to R ℄ (non-composite) + Rs ℄ (composite) + R ℄ + I (composite).

PERMANENT BRACING DETAILS FOR 48" PPC I-BEAMS

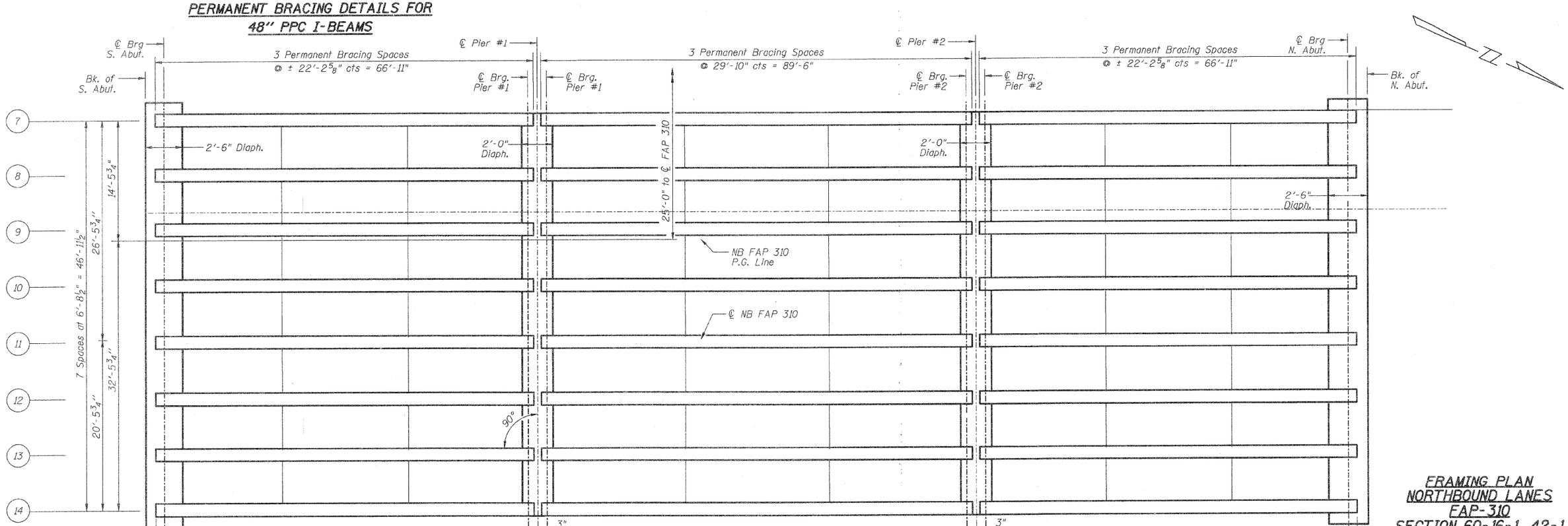

FRAMING PLAN

DESIGNED	R.K.M.
CHECKED	M.E.B.
DRAWN	P.W.S.
CHECKED	M.E.B.-R.K.M.

FRAMING PLAN NORTHBOUND LANES FAP-310 SECTION 60-16-1, 42-1 JERSEY COUNTY STATION 318+48.66 STRUCTURE NO. 042-0027 (N.B.)

HURST-ROSCHE ENGINEERS, INC.
601 NORTH BRUNS LANE
SPRINGFIELD, IL 62702
(217)-787-1199
FAX (217)-793-1199

RTE.	SECTION	COUNTY	TOTAL SHEETS	SHEET NO.
310	60-16-1, 42-1	JERSEY	481	208
STA.		TO STA.		
FED. ROAD DIST. NO.	ILLINOIS	FED. AID PROJECT		

Sheet 24 of 35 Sheets

CONTRACT NO. 76318

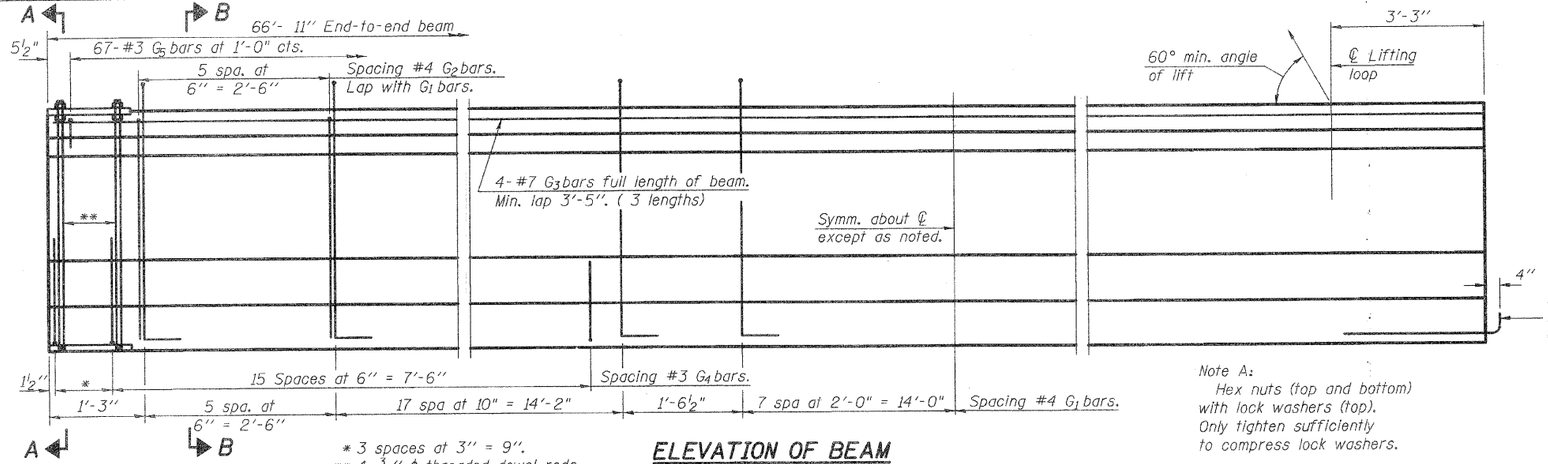

* 3 spaces at 3" = 9".
** 4-¾" ϕ threaded dowel rods at 3" cts., Each Face.

ELEVATION OF BEAM
(Showing reinforcement & dimensions)

Note A:
Hex nuts (top and bottom) with lock washers (top). Only tighten sufficiently to compress lock washers.

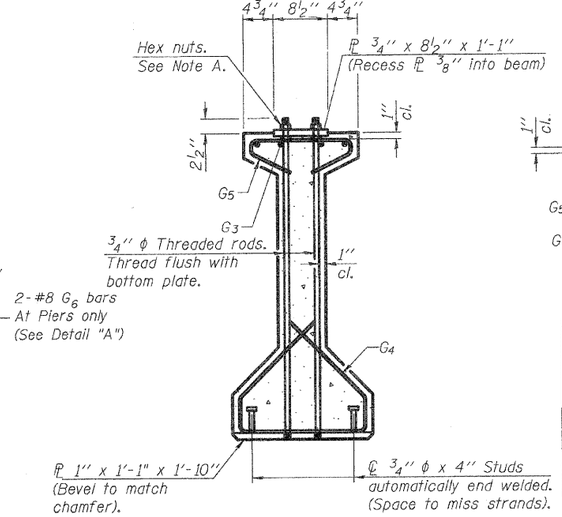

SECTION A-A

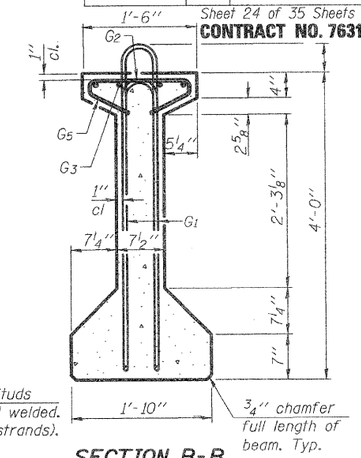

SECTION B-B

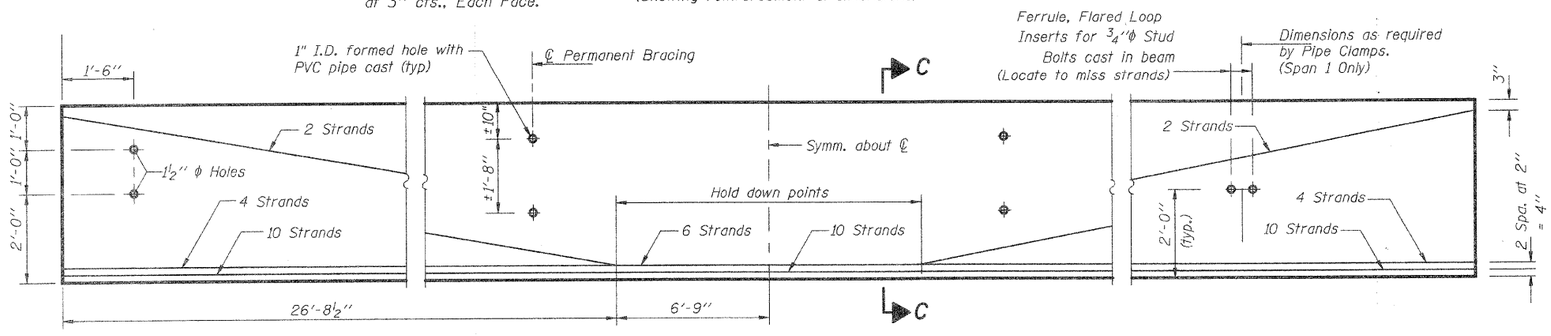

ELEVATION OF BEAM
(Showing Prestressing Steel)

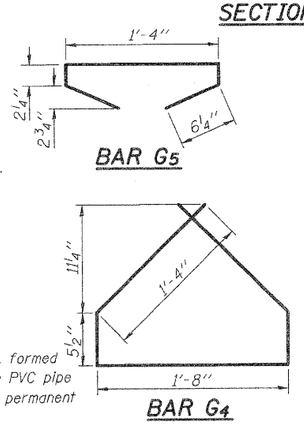

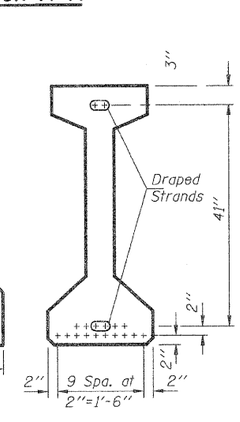

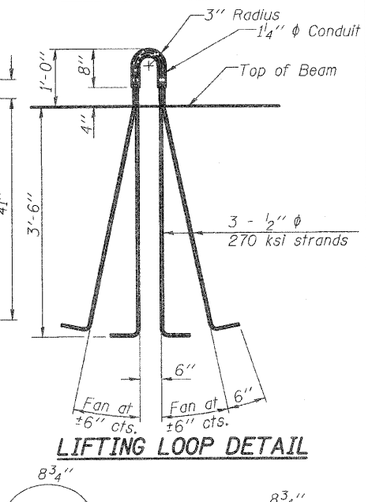

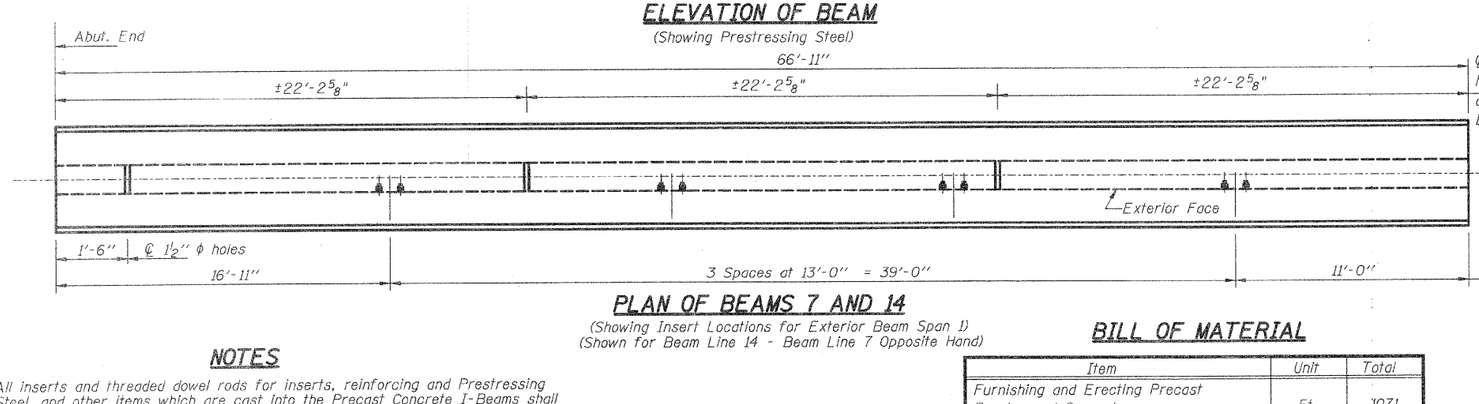

PLAN OF BEAMS 7 AND 14
(Showing Insert Locations for Exterior Beam Span 1)
(Shown for Beam Line 14 - Beam Line 7 Opposite Hand)

NOTES

All inserts and threaded dowel rods for inserts, reinforcing and Prestressing Steel, and other items which are cast into the Precast Concrete I-Beams shall be included in the contract unit price per foot of "Furnishing and Erecting Precast Prestressed Concrete I-Beams, 48 in."

Inserts for ¾" ϕ threaded dowel rods, when specified, are to be two strut, ferrule type for interior beams and single ferrule, flared loop type for exterior beams.

Prestressing steel shall be uncoated high strength, low relaxation 7-wire strand, Grade 270. The nominal diameter shall be ½" and the nominal cross-sectional area shall be 0.153 sq. in.

Reinforcement bars shall conform to ASTM A 706, Grade 60.

A minimum 2½" ϕ lifting pin shall be used to engage the lifting loops during handling.

Tilt G bars when necessary to maintain 1½" clearance.

The top and bottom plates shall be AASHTO M270 Grade 50.

The bottom plates and studs shall be galvanized according to AASHTO M111.

Threaded rods shall be ASTM F 1554 Grade 55.

Required release strength, f'ci, shall be 5000 psi.

BILL OF MATERIAL

Item	Unit	Total
Furnishing and Erecting Precast Prestressed Concrete I-Beams, 48"	Ft.	1071

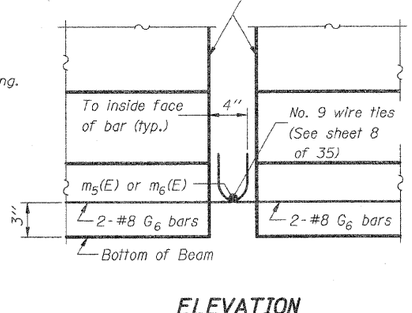

ELEVATION

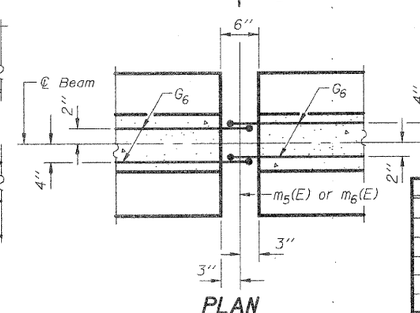

PLAN

DETAIL "A"

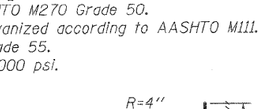

BAR G6

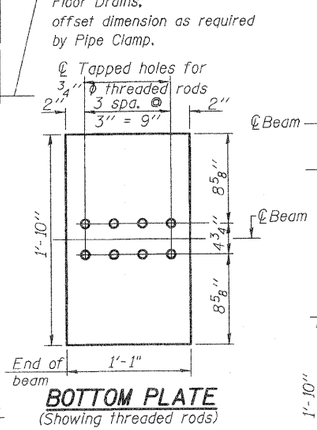

BOTTOM PLATE
(Showing threaded rods)

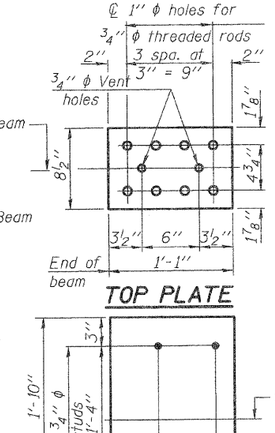

TOP PLATE

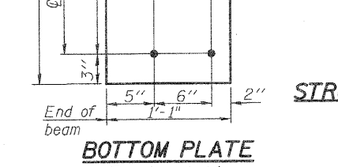

BOTTOM PLATE
(Showing studs)

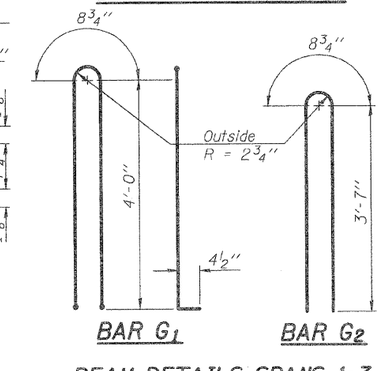

BAR G1 BAR G2

* BAR LIST

Bar	No.	Size	Length	Shape
G1	61	#4	9'-6"	
G2	12	#4	7'-11"	
G3	12	#7	24'-6"	
G4	38	#3	5'-3"	
G5	67	#3	2'-9"	
G6	2	#8	6'-0"	

* For one beam only.

DESIGNED	R.K.M.
CHECKED	M.E.B.
DRAWN	P.W.S.
CHECKED	M.E.B.-R.K.M.

BEAM DETAILS SPANS 1-3
BEAMS 7-14
NORTHBOUND LANES
FAP-310
SECTION 60-16-1, 42-1
JERSEY COUNTY
STATION 318+48.66
STRUCTURE NO. 042-0027 (N.B.)

HURST - ROSCHE ENGINEERS, INC.
601 NORTH BRUNS LANE
SPRINGFIELD, IL 62702
(217)-787-1199
FAX (217)-793-1199

F.A.P. RTE.	SECTION	COUNTY	TOTAL SHEETS	SHEET NO.
310	60-16-1, 42-1	JERSEY	481	209
STA.		TO STA.		
FED. ROAD DIST. NO.	ILLINOIS	FED. AID PROJECT		

Sheet 25 of 35 Sheets

CONTRACT NO. 76318

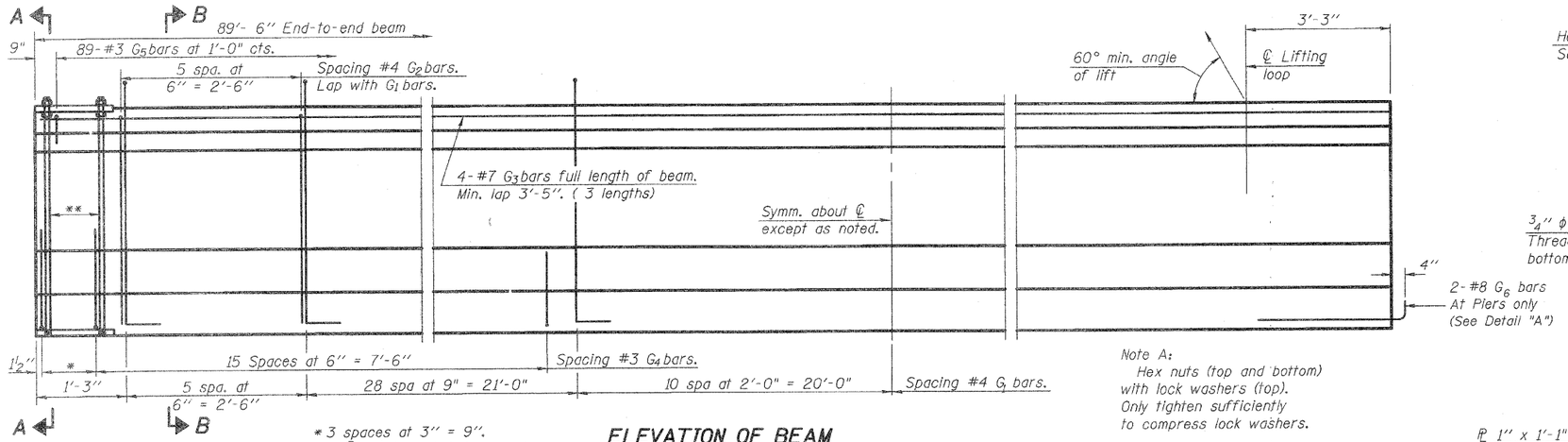

Note A:
Hex nuts (top and bottom) with lock washers (top). Only tighten sufficiently to compress lock washers.

* 3 spaces at 3" = 9".
** 4-¾" ϕ threaded dowel rods at 3" cts., Each Face.

ELEVATION OF BEAM
(Showing reinforcement & dimensions)

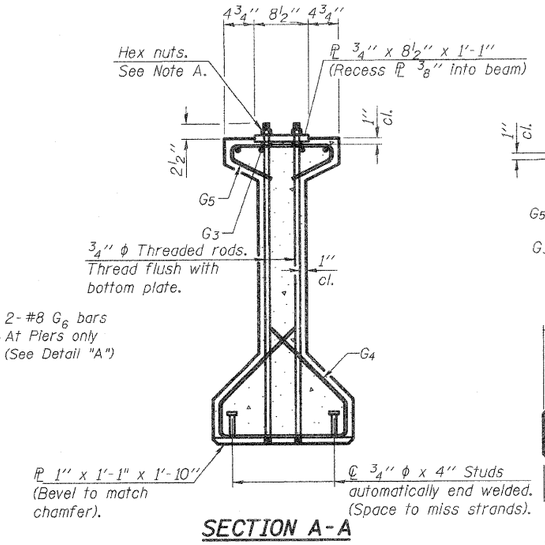

SECTION A-A

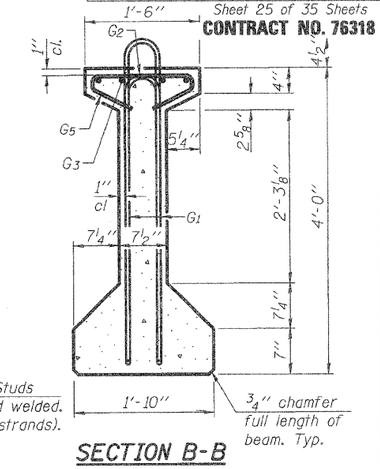

SECTION B-B

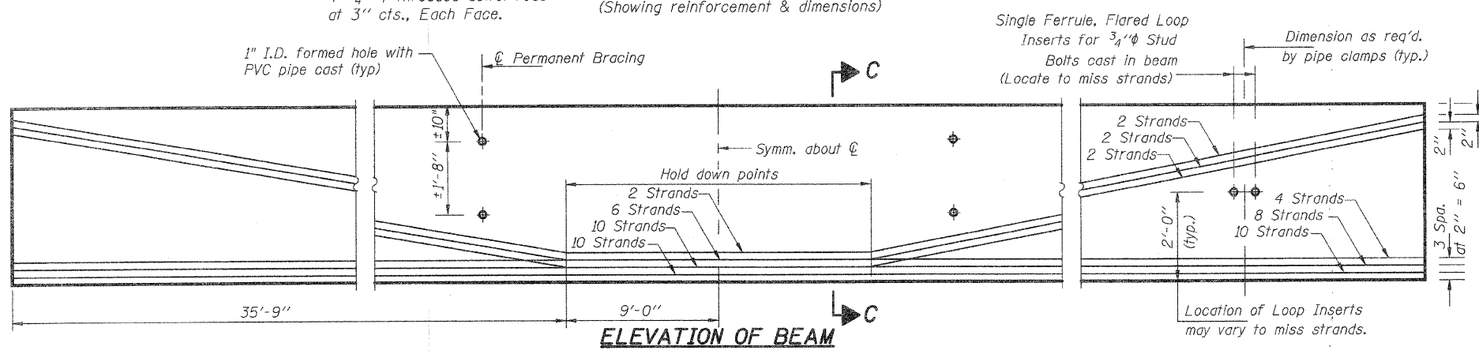

ELEVATION OF BEAM
(Showing Prestressing Steel)

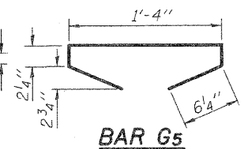

BAR G5

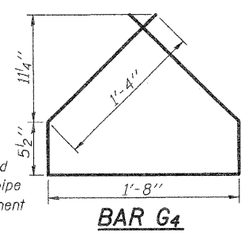

BAR G4

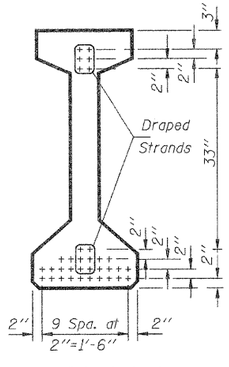

SECTION C-C

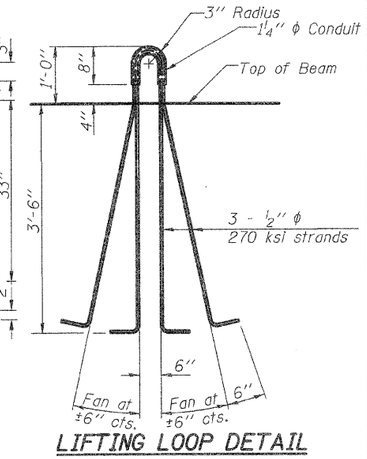

LIFTING LOOP DETAIL

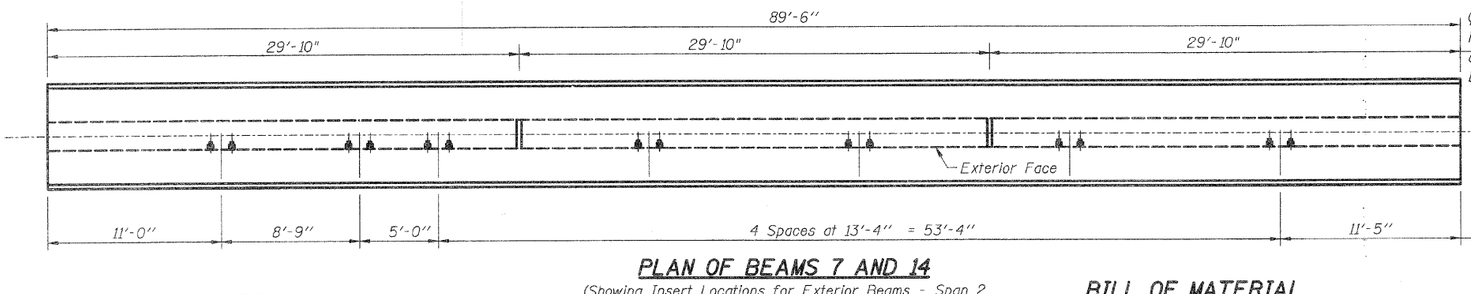

PLAN OF BEAMS 7 AND 14
(Showing Insert Locations for Exterior Beams - Span 2 Shown for Beam Line 14 - Beam Line 7 Opposite Hand)

℄ Insert Spacing for Floor Drains, offset dimension as required by Pipe Clamp.

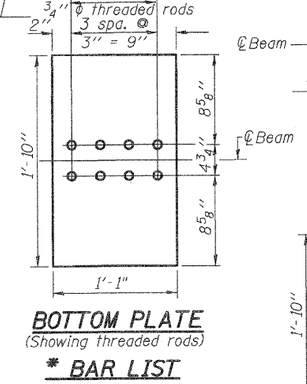

BOTTOM PLATE
(Showing threaded rods)

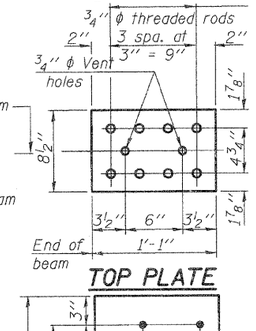

TOP PLATE

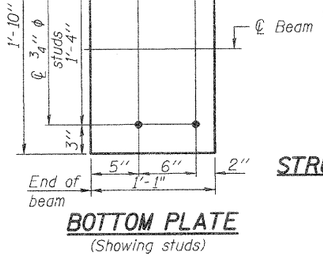

BOTTOM PLATE
(Showing studs)

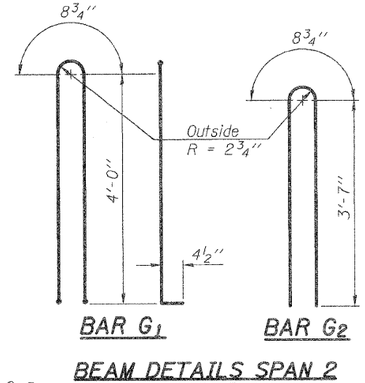

BAR G1 BAR G2

NOTES

All inserts and threaded dowel rods for inserts, reinforcing and Prestressing Steel, and other items which are cast into the Precast Concrete I-Beams shall be included in the contract unit price per foot of "Furnishing and Erecting Precast Prestressed Concrete I-Beams, 48 in."

Inserts for ¾" ϕ threaded dowel rods, when specified, are to be two strut, ferrule type for interior beams and single ferrule, flared loop type for exterior beams.

Prestressing steel shall be uncoated high strength, low relaxation 7-wire strand, Grade 270. The nominal diameter shall be ½" and the nominal cross-sectional area shall be 0.153 sq. in.

Reinforcement bars shall conform to ASTM A 706, Grade 60. (See Special Provisions).

A minimum 2½" ϕ lifting pin shall be used to engage the lifting loops during handling.

Tilt G bars when necessary to maintain 1½" clearance.

The top and bottom plates shall be AASHTO M270 Grade 50.

The bottom plates and studs shall be galvanized according to AASHTO M111.

Threaded rods shall be ASTM F 1554 Grade 55.

Required release strength, f'ci, shall be 5000 psi.

BILL OF MATERIAL

Item	Unit	Total
Furnishing and Erecting Precast Prestressed Concrete I-Beams, 48"	Ft.	716

* BAR LIST

Bar	No.	Size	Length	Shape
G_1	87	#4	9'-6"	
G_2	12	#4	7'-11"	
G_3	12	#7	24'-6"	
G_4	38	#3	5'-3"	
G_5	89	#3	2'-9"	
G_6	4	#8	6'-0"	

* For one beam only.

BAR G6

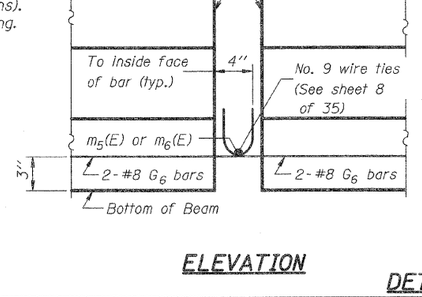

ELEVATION

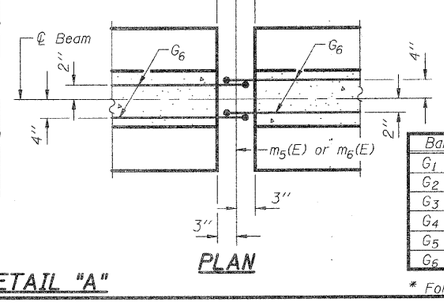

PLAN

DETAIL "A"

DESIGNED	R.K.M.
CHECKED	M.E.B.
DRAWN	P.W.S.
CHECKED	M.E.B.-R.K.M.

BEAM DETAILS SPAN 2
BEAMS 7-14
NORTHBOUND LANES
FAP-310
SECTION 60-16-1, 42-1
JERSEY COUNTY
STATION 318+48.66
STRUCTURE NO. 042-0027 (N.B.)

HURST-ROSCHE ENGINEERS, INC.
601 NORTH BRUNS LANE
SPRINGFIELD, IL 62702
(217)-787-1199
FAX (217)-793-1199

ROUTE	SECTION	COUNTY	TOTAL SHEETS	SHEET NO.
310	60-16-1, 42-1	JERSEY	481	210
STA.		TO STA.		
FED. ROAD DIST. NO.	ILLINOIS	FED. AID PROJECT		

Sheet 26 of 35 Sheets

CONTRACT NO. 76318

E.F. - Each Face
E.E. - Each End

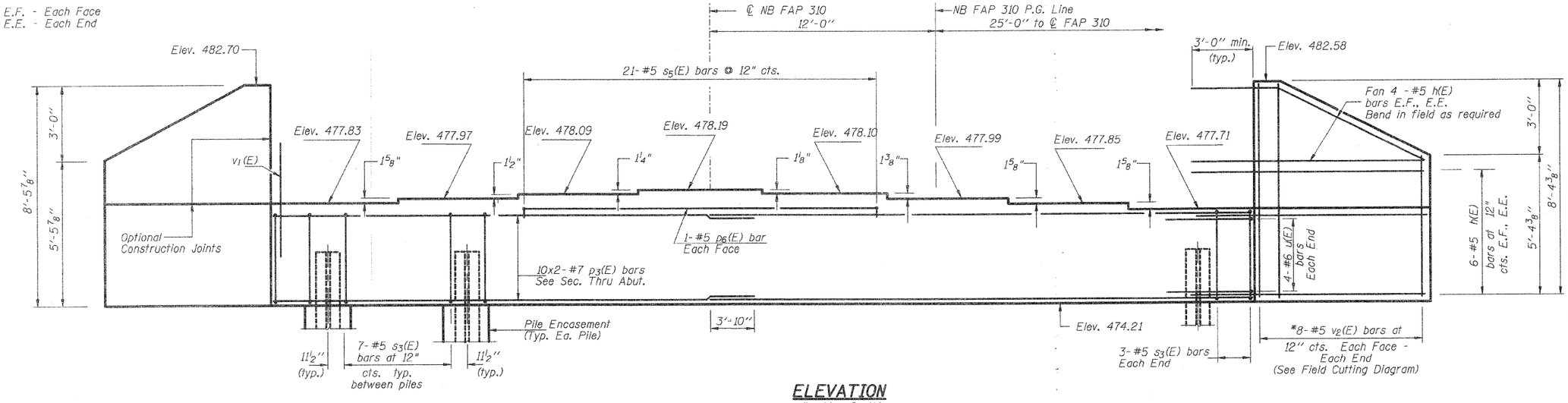

ELEVATION
(Looking South)

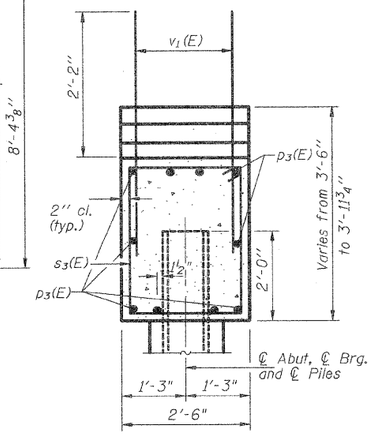

SEC. THRU ABUT.

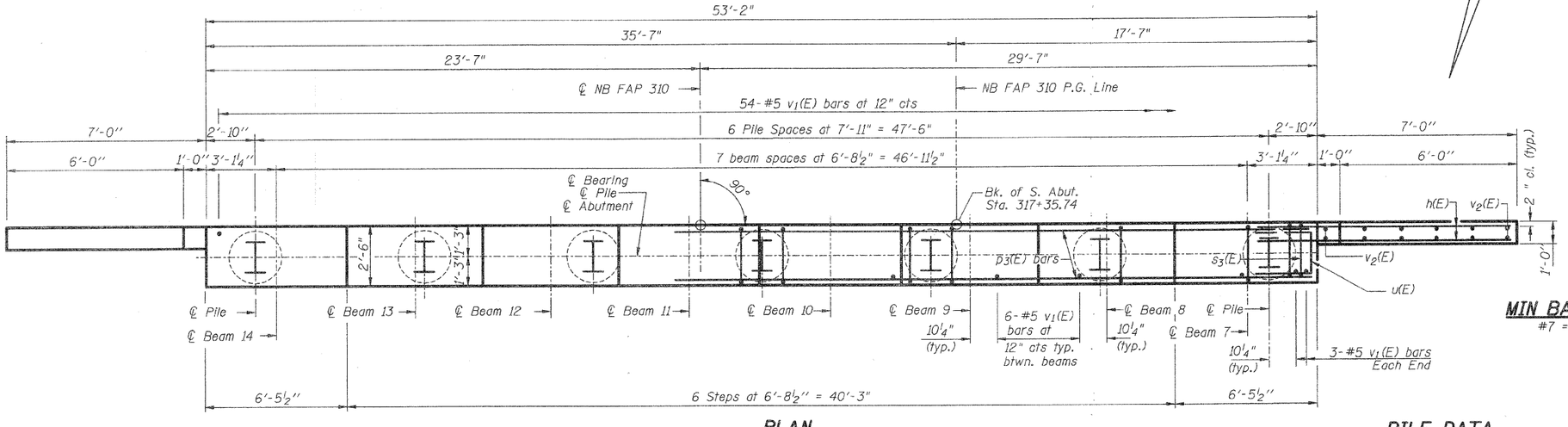

PLAN

MIN BAR LAP
#7 = 3'-10"

BILL OF MATERIAL

Bar	No.	Size	Length	Shape
h(E)	40	#5	10'-0"	
p3(E)	20	#7	28'-6"	
p6(E)	2	#5	19'-9"	
s3(E)	48	#5	11'-7"	
s5(E)	21	#5	6'-2"	
u(E)	8	#6	11'-0"	
v1(E)	102	#5	4'-4"	
v2(E)	16	#5	13'-2"	
Furnishing Steel Piles HP 12x53			Foot	266
Driving Piles			Foot	266
Pile Shoes			Each	7
Concrete Structures			Cu. Yd.	22.2
Reinforcement Bars, Epoxy Coated			Pound	3160
Structure Excavation			Cu. Yd.	115.0
Concrete Encasement			Cu. Yd.	2.4

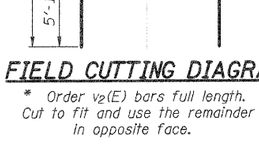

FIELD CUTTING DIAGRAM
* Order v2(E) bars full length.
Cut to fit and use the remainder of bars in opposite face.

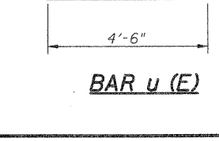

BAR u (E)

BAR s5(E)

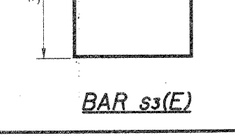

BAR s3(E)

PILE DATA
Type: Steel HP 12x53 with pile shoes.
Allowable Resistance Available: 139 kips
Nominal Required Bearing: 419 kips
Estimated Length: 38'
No. Required: 7

Notes:
Pour steps monolithically with cap.
All Edges shall have standard ¾" Chamfers except as Noted.
Bars indicated thus 20 x 3-#5 etc. indicates 20 lines of bars with 3 lengths per line.

DESIGNED	M.E.B.
CHECKED	R.K.M.
DRAWN	P.W.S.
CHECKED	M.E.B.-R.K.M.

SOUTH ABUTMENT
NORTHBOUND LANES
FAP-310
SECTION 60-16-1, 42-1
JERSEY COUNTY
STATION 318+48.66
STRUCTURE NO. 042-0027 (N.B.)

HURST-ROSCHE ENGINEERS, INC.
601 NORTH BRUNS LANE
SPRINGFIELD, IL 62702
(217)-787-1199
FAX (217)-793-1199

F.A.P. RTE.	SECTION	COUNTY	TOTAL SHEETS	SHEET NO.
310	60-16-1, 42-1	JERSEY	481	211
STA.		TO STA.		
FED. ROAD DIST. NO.	ILLINOIS	FED. AID PROJECT		

Sheet 27 of 35 Sheets

CONTRACT NO. 76318

E.F. - Each Face
E.E. - Each End

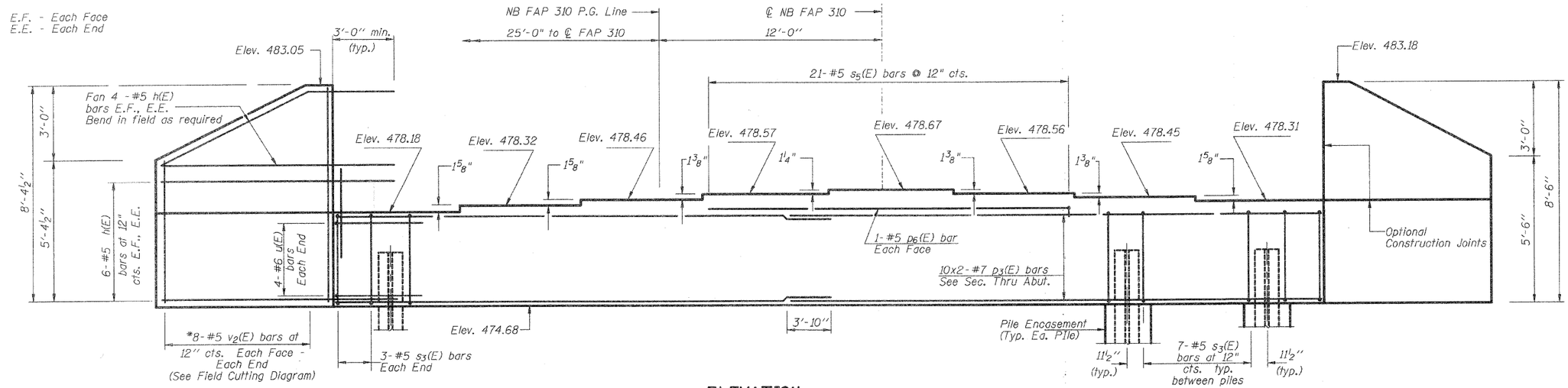

ELEVATION
(Looking North)

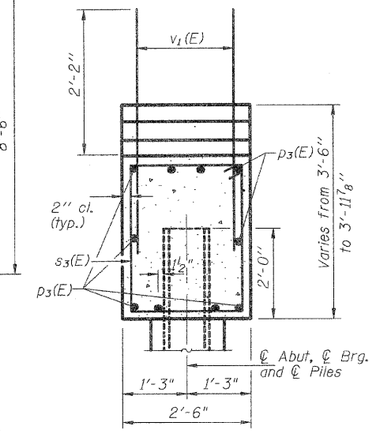

SEC. THRU ABUT.

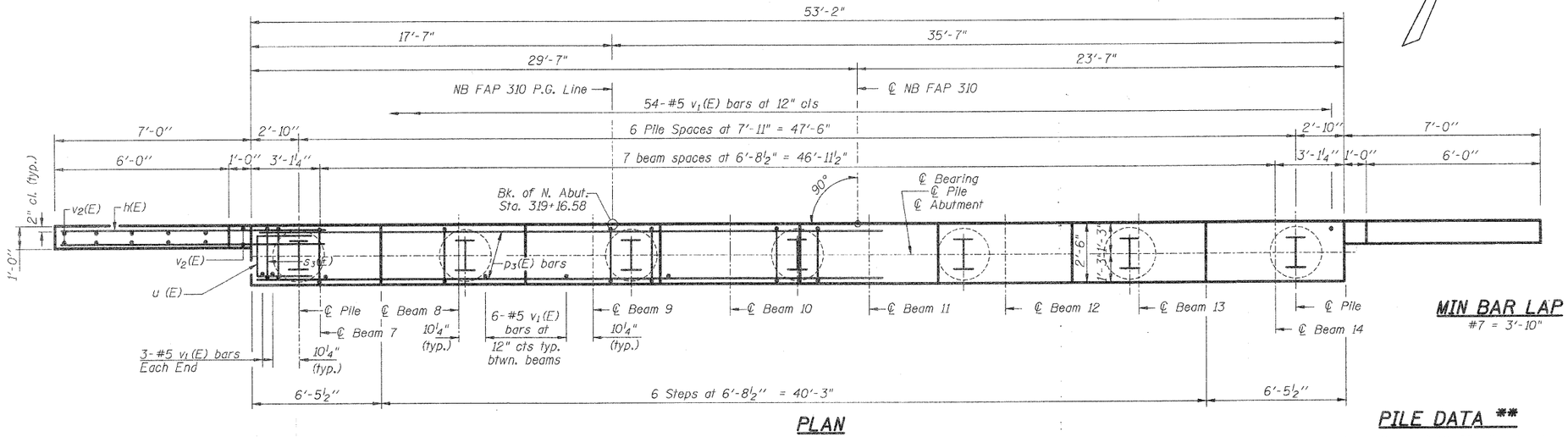

PLAN

MIN BAR LAP
#7 = 3'-10"

BILL OF MATERIAL

Bar	No.	Size	Length	Shape
h(E)	40	#5	10'-0"	
p3(E)	20	#7	28'-6"	
p6(E)	2	#5	19'-9"	
s3(E)	48	#5	11'-7"	
s5(E)	21	#5	6'-2"	
u(E)	8	#6	11'-0"	
v1(E)	102	#5	4'-4"	
v2(E)	16	#5	13'-2"	
Furnishing Steel Piles HP 12x53			Foot	288
Driving Piles			Foot	288
Pile Shoes			Each	7
Test Pile Steel HP12x53			Each	1
Concrete Structures			Cu. Yd.	22.2
Reinforcement Bars, Epoxy Coated			Pound	3160
Structure Excavation			Cu. Yd.	115.0
Concrete Encasement			Cu. Yd.	2.4

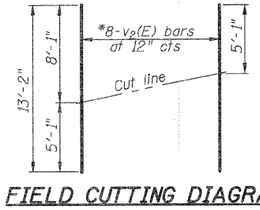

FIELD CUTTING DIAGRAM
* Order $v_2(E)$ bars full length. Cut to fit and use the remainder of bars in opposite face.

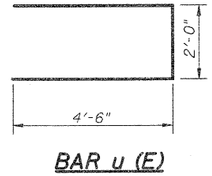

BAR u (E)

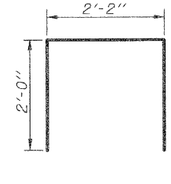

BAR s5(E)

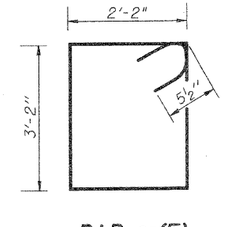

BAR s3(E)

PILE DATA **

Type: Steel HP 12x53 with pile shoes.
Allowable Resistance Available: 139 kips
Nominal Required Bearing: 419 kips
Estimated Length: 48'
No. Required: 6 plus
1 Test Pile

** The subsurface data near the (NB) N. Abutment indicate the driven pile lengths may vary from 48' (on the East) to 36' (on the West).
The test pile shall be located and the pile lengths ordered considering this possibility.

Notes:

Pour steps monolithically with cap.
All Edges shall have standard 3/4" Chamfers except as Noted.

Bars indicated thus 20 x 3-#5 etc. indicates 20 lines of bars with 3 lengths per line.

NORTH ABUTMENT
NORTHBOUND LANES
FAP-310
SECTION 60-16-1, 42-1
JERSEY COUNTY
STATION 318+48.66
STRUCTURE NO. 042-0027 (N.B.)

DESIGNED	M.E.B.
CHECKED	R.K.M.
DRAWN	P.W.S.
CHECKED	M.E.B.-R.K.M.

HR
HURST-ROSCHE ENGINEERS, INC.
601 NORTH BRUNS LANE
SPRINGFIELD, IL 62702
(217)-787-1199
FAX (217)-793-1199

F.A.P. RTE.	SECTION	COUNTY	TOTAL SHEETS	SHEET NO.
310	60-16-1, 42-1	JERSEY	481	212
STA.		TO STA.		
FED. ROAD DIST. NO.	ILLINOIS	FED. AID PROJECT		

Sheet 28 of 35 Sheets

CONTRACT NO. 76318

Notes:

Space reinforcement in cap to miss anchor bolts.
Pour steps monolithically with cap.
All exposed edges shall have standard $\frac{3}{4}''$ chamfers.

If a portion of the pier wall or concrete encasement is under water, reinforcement may be placed underwater into forms. Concrete shall be tremied according to Article 503.08 of the Standard Specifications to an elevation of 1'-0" above the water line at the time of construction

E.F. - Each Face
E.E. - Each End

PILE DATA

Type: Steel HP 14x89 w/ pile shoes
Allowable Resistance Available: 235 kips
Nominal Required Bearing: 705 kips
Est. Length: 42'
No. Req'd: 10

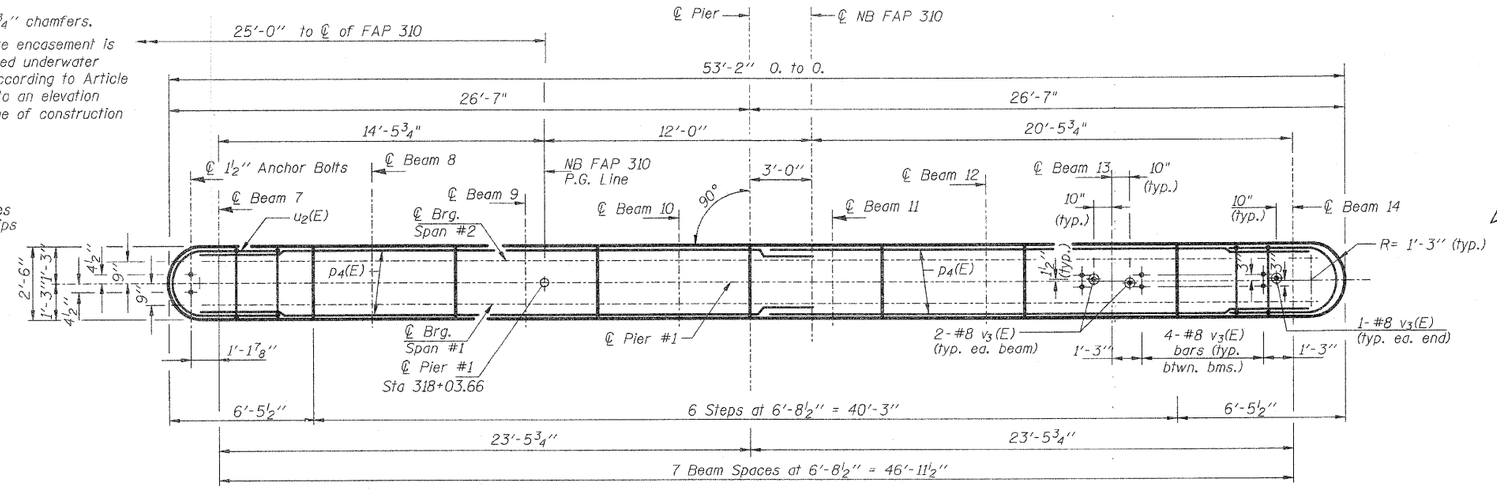

TOP PLAN

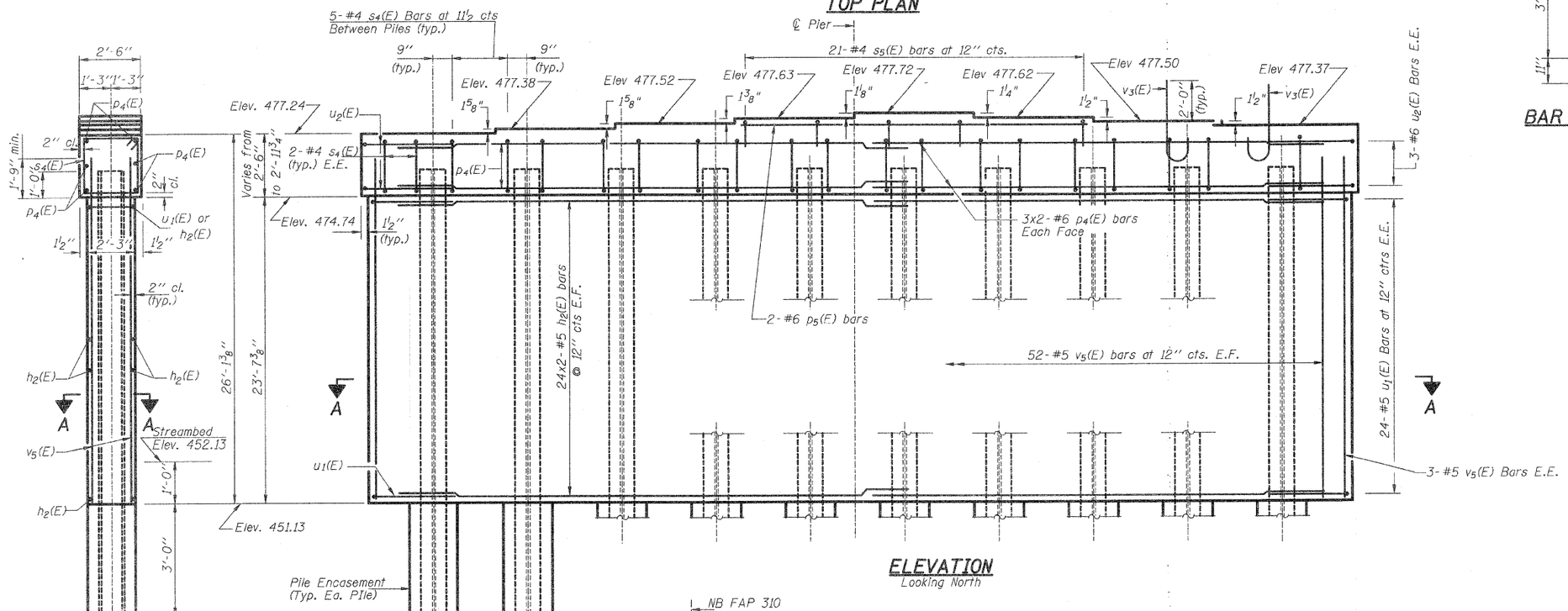

ELEVATION

Looking North

END VIEW

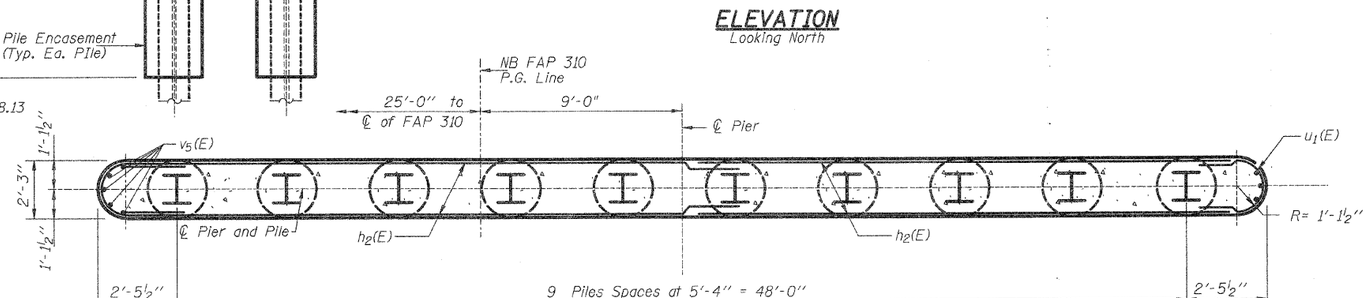

SECTION A-A

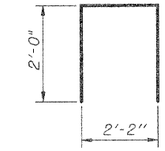

BAR s5(E)

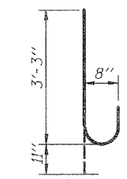

BAR v3(E)

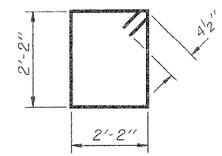

BAR s4(E)

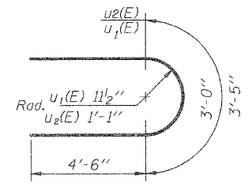

BARS u1(E) & u2(E)

BILL OF MATERIAL

Bar	No.	Size	Length	Shape
h2(E)	96	#5	26'-10"	
p4(E)	12	#6	27'-2"	
p5(E)	2	#6	19'-10"	
s4(E)	49	#4	9'-5"	
s5(E)	21	#4	6'-2"	
u1(E)	48	#5	12'-0"	
u2(E)	6	#6	12'-5"	
v3(E)	42	#8	4'-2"	
v5(E)	110	#5	25'-5"	
Concrete Structures			Cu. Yd.	116.6
Reinforcement Bars, Epoxy Coated			Pound	7730
Furnishing Steel Piles HP14x89			Foot	420
Driving Piles			Foot	420
Pile Shoes			Each	10
Underwater Struc Excav. Protection, Loc. No. 1			Each	1
Structure Excavation			Cu. Yd.	143.5
Concrete Encasement			Cu. Yd.	5.5

Min. Bar Lap

#5 - 3'-0"
#6 - 3'-7"

DESIGNED	M.E.B.
CHECKED	R.K.M.
DRAWN	P.W.S.
CHECKED	M.E.B.-R.K.M.

PIER # 1
NORTHBOUND LANES
FAP-310
SECTION 60-16-1, 42-1
JERSEY COUNTY
STATION 318+48.66
STRUCTURE NO. 042-0027 (N.B.)

HURST-ROSCHE ENGINEERS, INC.
601 NORTH BRUNS LANE
SPRINGFIELD, IL 62702
(217)-787-1199
FAX (217)-793-1199

TOTAL RTE.	SECTION	COUNTY	TOTAL SHEETS	SHEET NO.
310	60-16-1, 42-1	JERSEY	481	213
STA.		TO STA.		
FED. ROAD DIST. NO.	ILLINOIS	FED. AID PROJECT		

Sheet 29 of 35 Sheets

CONTRACT NO. 76318

Notes:

Space reinforcement in cap to miss anchor bolts.
Pour steps monolithically with cap.
All exposed edges shall have standard $\frac{3}{4}''$ chamfers.

If a portion of the pier wall or concrete encasement is under water, reinforcement may be placed underwater into forms. Concrete shall be tremied according to Article 503.08 of the Standard Specifications to an elevation of 1'-0" above the water line at the time of construction

E.F. - Each Face
E.E. - Each End

PILE DATA

Type: Steel HP 14x89 w/ pile shoes
Allowable Resistance Available: 235 kips
Nominal Required Bearing: 705 kips
Est. Length: 48'
No. Req'd: 10

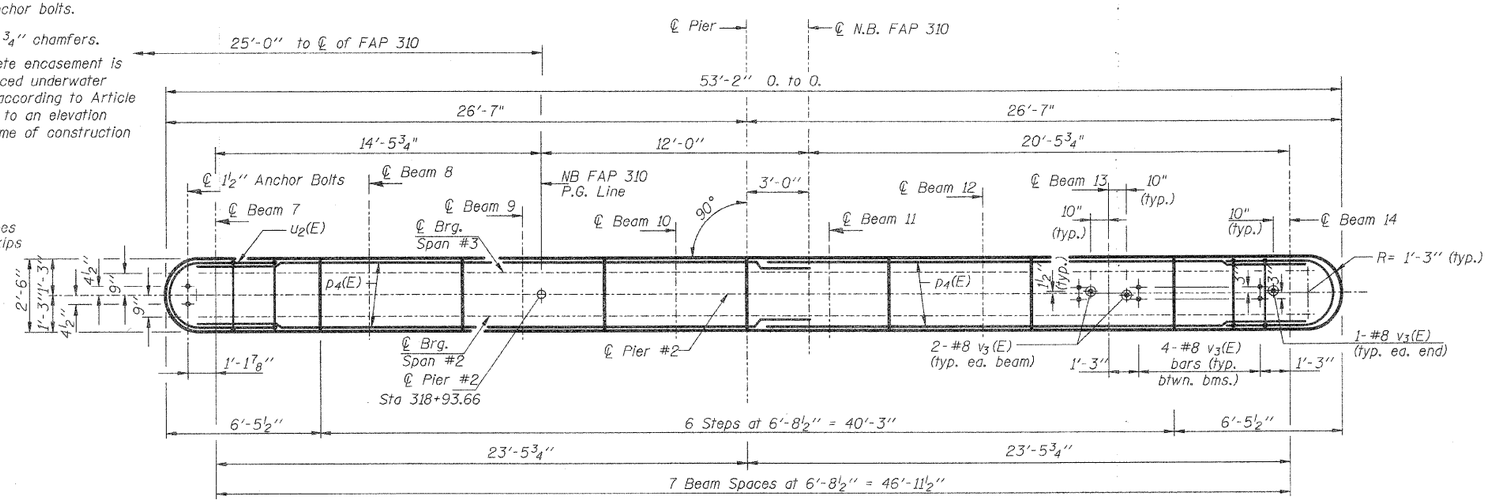

TOP PLAN

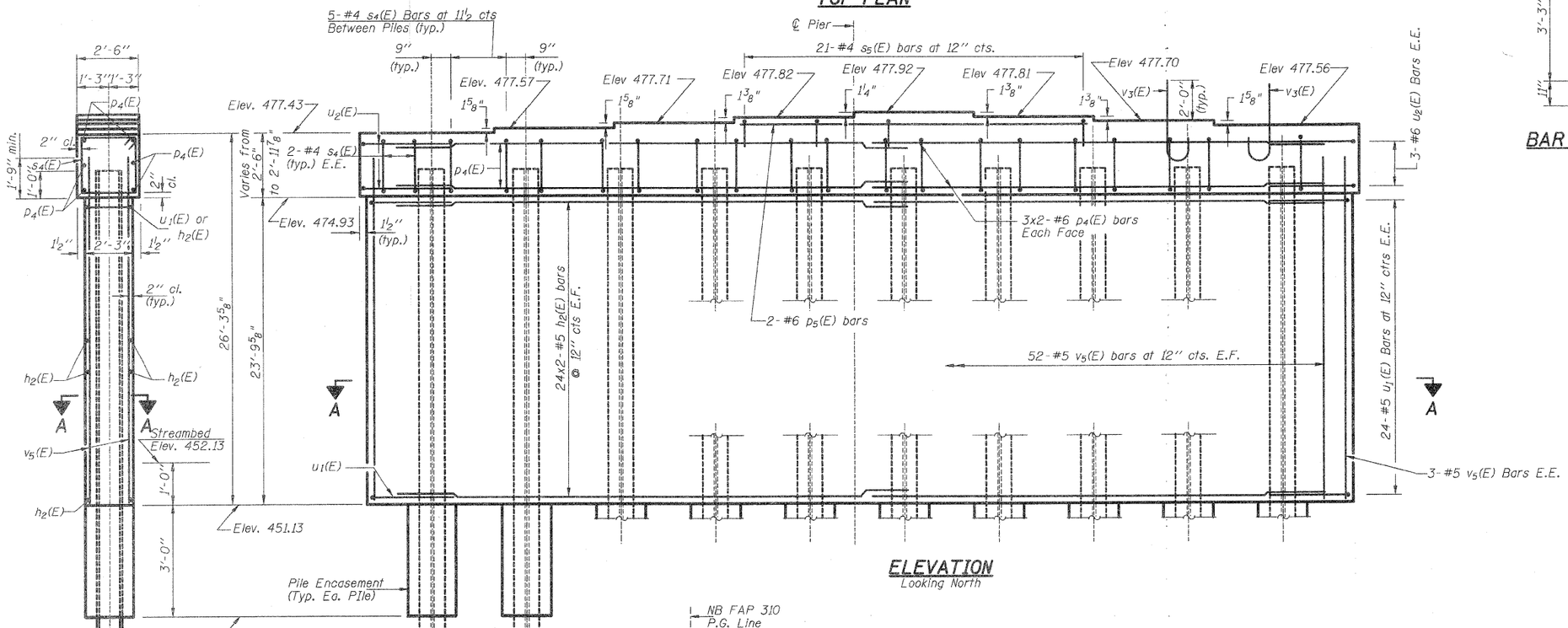

ELEVATION

Looking North

END VIEW

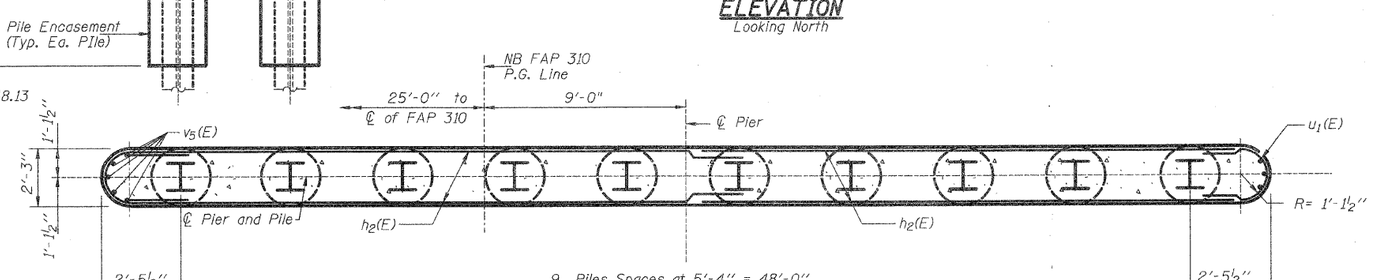

SECTION A-A

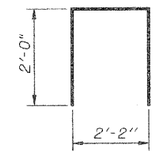

BAR s5(E)

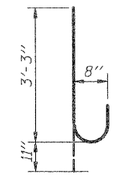

BAR v3(E)

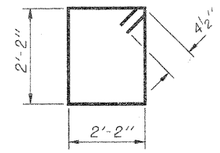

BAR s4(E)

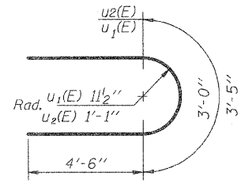

BARS u1(E) & u2(E)

BILL OF MATERIAL

Bar	No.	Size	Length	Shape
h2(E)	96	#5	26'-10"	
p4(E)	12	#6	27'-2"	
p5(E)	2	#6	19'-10"	
s4(E)	49	#4	9'-5"	
s5(E)	21	#4	6'-2"	
u1(E)	48	#5	12'-0"	
u2(E)	6	#6	12'-5"	
v3(E)	42	#8	4'-2"	
v5(E)	110	#5	25'-5"	
Concrete Structures			Cu. Yd.	117.5
Reinforcement Bars, Epoxy Coated			Pound	7730
Furnishing Steel Piles HP14x89			Foot	480
Driving Piles			Foot	480
Pile Shoes			Each	10
Underwater Struc Excav. Protection, Loc. No. 2			Each	1
Structure Excavation			Cu. Yd.	143.5
Concrete Encasement			Cu. Yd.	5.5

Min. Bar Lap

#5 - 3'-0"
#6 - 3'-7"

DESIGNED	M.E.B.
CHECKED	R.K.M.
DRAWN	P.W.S.
CHECKED	M.E.B.-R.K.M.

PIER # 2
NORTHBOUND LANES
FAP-310
SECTION 60-16-1, 42-1
JERSEY COUNTY
STATION 318+48.66
STRUCTURE NO. 042-0027 (N.B.)

HR
HURST-ROSCHE ENGINEERS, INC.
601 NORTH BRUNS LANE
SPRINGFIELD, IL 62702
(217)-787-1199
FAX (217)-793-1199

F.A.P. RTE.	SECTION	COUNTY	TOTAL SHEETS	SHEET NO.
310	60-16-1, 42-1	JERSEY	481	214
STA.		TO STA.		
FED. ROAD DIST. NO.	ILLINOIS	FED. AID PROJECT		

Sheet 30 of 35 Sheets

CONTRACT NO. 76318

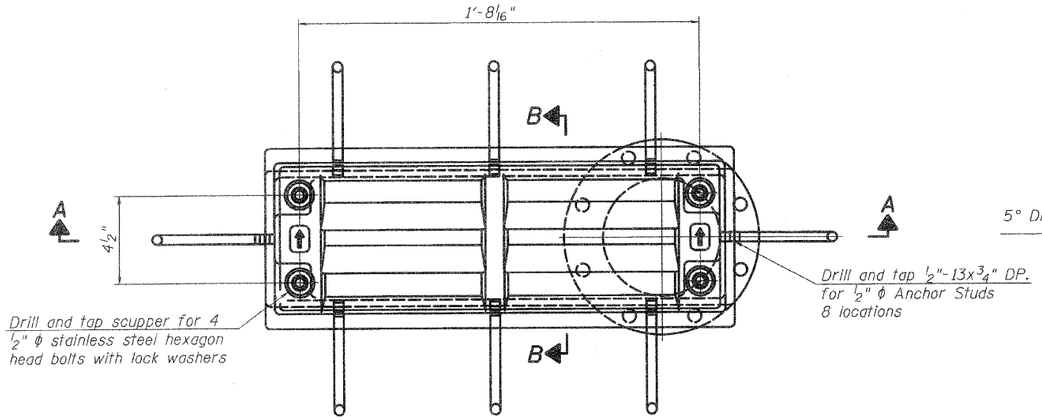

PLAN

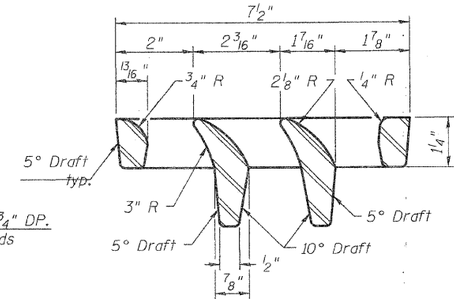

VANE GRATE DETAIL

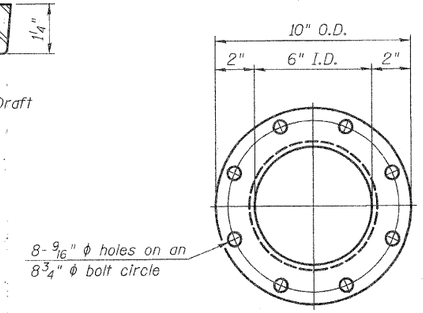

Notes:

All cast iron parts shall be gray iron conforming to the requirements of AASHTO M 105, Class 35B.

Bolts, anchor studs, washers and nuts shall conform to the requirements of ASTM A 307 and shall be galvanized according to AASHTO M 232.

Downspouts located on the exterior side of a painted steel fascia beam shall be painted with the finish coat specified for the exterior side of the fascia beam.

As an alternate, bolts, anchor studs, washers and nuts may be stainless steel according to Article 1006.29(d) of the Standard Specifications.

Structural steel weldments of equal sections and of the same configuration may be substituted for the cast iron scupper frame. Fillet or full penetration welds shall be used for the weldments. Details shall be submitted to the Engineer for approval. Structural steel weldments shall not be substituted for the cast iron scupper grate. Structural steel frames and downspouts shall be galvanized according to AASHTO M111.

The Contractor shall take appropriate measures to assure that Protective Coat is not applied to the scupper.

Cost of the Grate, Frame, Downspout, Anchor Studs, Bolts, Washers and Nuts including complete installation of the scupper shall be paid for at the contract unit price each for Drainage Scupper, DS-12.

Alternate fiberglass downspout conforming to ASTM D 2996 with a short-time rupture strength hoop tensile stress of 30,000 psi min. may be used in lieu of the cast iron or steel equivalent.

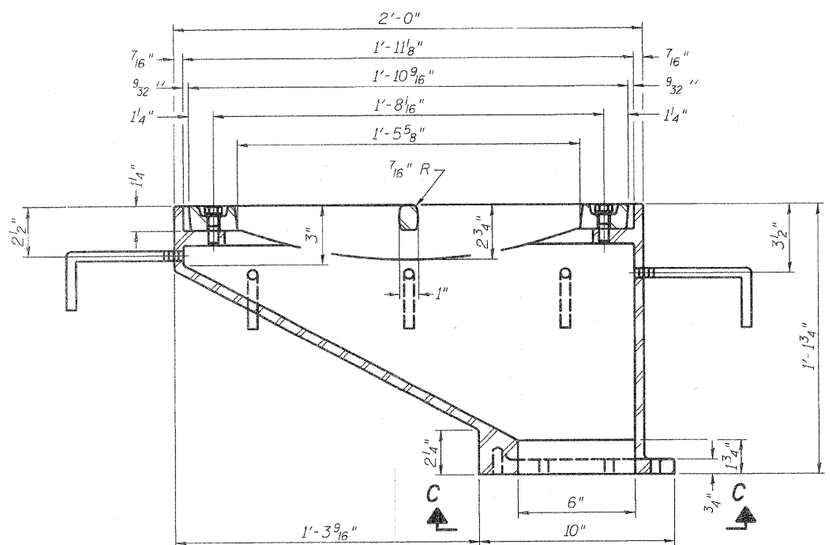

SECTION A-A

See sheets 7 & 21 of 35 for scupper location relative to parapet.

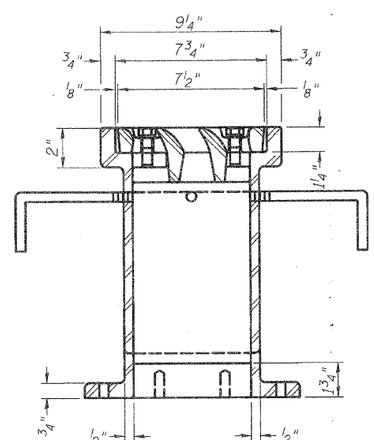

SECTION B-B

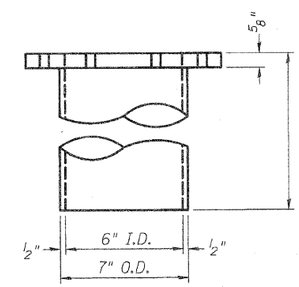

DOWNSPOUT

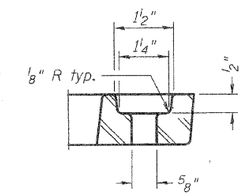

BOLT HOLE DETAIL

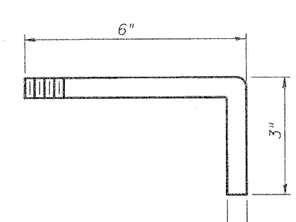

ANCHOR STUD DETAIL

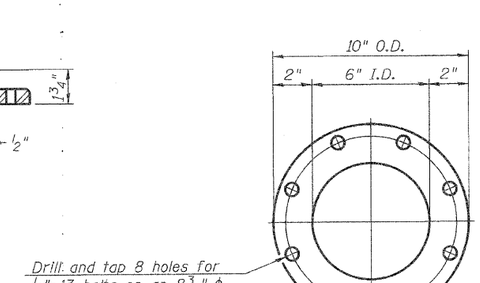

VIEW C-C

BILL OF MATERIAL

ITEM	UNIT	QUANTITY
Drainage Scupper, DS-12	Each	12

DRAINAGE SCUPPER, DS-12
FAP-310
SECTION 60-16-1, 42-1
JERSEY COUNTY
STATION 318+48.66
STRUCTURE NO. 042-0026 (S.B.)
042-0027 (N.B.)

DESIGNED	R.K.M.
CHECKED	M.E.B.
DRAWN	P.W.S.
CHECKED	M.E.B.-R.K.M.

DS-12 10-1-08

(W.T. to inside of exterior stringer flange shall not be >3'-11")

HURST-ROSCHE ENGINEERS, INC.
601 NORTH BRUNS LANE
SPRINGFIELD, IL 62702
(217)-787-1199
FAX (217)-793-1199

F.A.P. RTE.	SECTION	COUNTY	TOTAL SHEETS	SHEET NO.
310	60-16-1, 42-1	JERSEY	481	215
STA.		TO STA.		
FED. ROAD DIST. NO.	ILLINOIS	FED. AID PROJECT		

Sheet 31 of 35 Sheets

CONTRACT NO. 76318

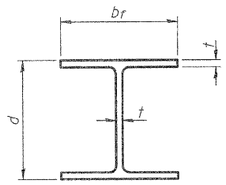

STEEL PILE TABLE

Designation	Depth d	Flange width b_f	Web and Flange thickness t	Encasement diameter A
HP 14x117	14 1/4"	14 7/8"	13/16"	30"
x102	14"	14 3/4"	11/16"	30"
x89	13 7/8"	14 3/4"	5/8"	30"
x73	13 5/8"	14 5/8"	1/2"	30"
HP 12x84	12 1/4"	12 1/4"	11/16"	24"
x74	12 1/8"	12 1/4"	5/8"	24"
x63	12"	12 1/8"	1/2"	24"
x53	11 3/4"	12"	7/16"	24"
HP 10x57	10"	10 1/4"	9/16"	24"
x42	9 3/4"	10 1/8"	7/16"	24"
HP 8x36	8"	8 1/8"	7/16"	18"

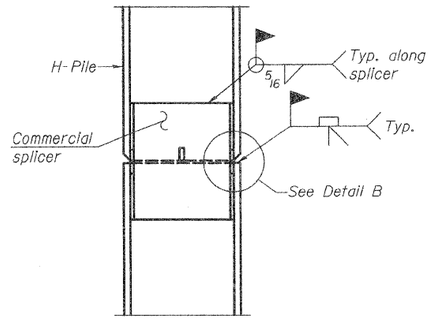

ELEVATION

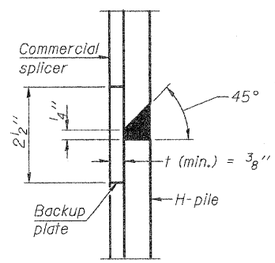

DETAIL "B"

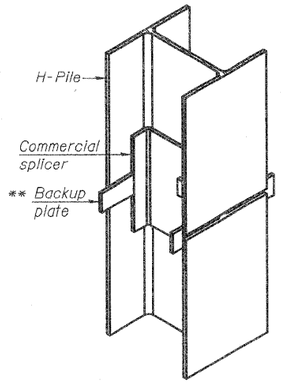

ISOMETRIC VIEW

WELDED COMMERCIAL SPLICE

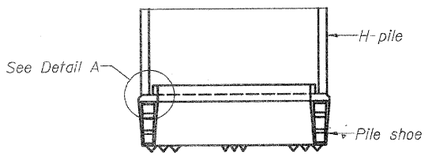

ELEVATION

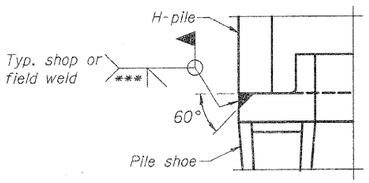

DETAIL A

H-PILE SHOE ATTACHMENT

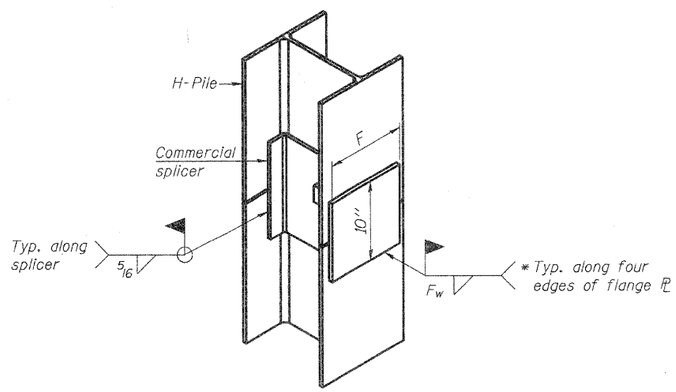

ISOMETRIC VIEW

WELDED COMMERCIAL SPLICE ALTERNATE

* Interrupt welds 1/4" from end of web and/or each flange.

** Remove portions of backup plates that extend outside the flanges.

*** Weld size per pile shoe manufacturer (5/16" min.).

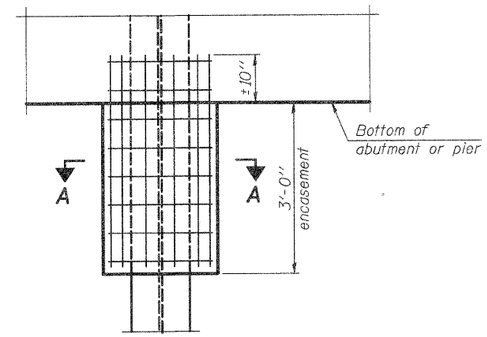

ELEVATION

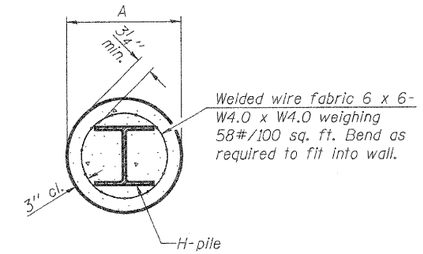

Note:
Forms for encasement may be omitted when soil conditions permit.

SECTION A-A

PILE ENCASEMENT

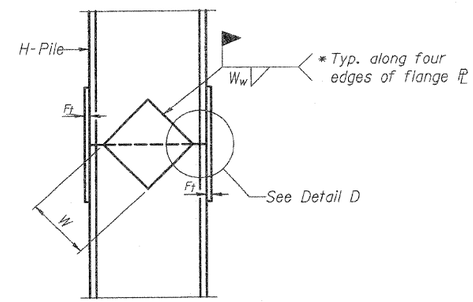

ELEVATION

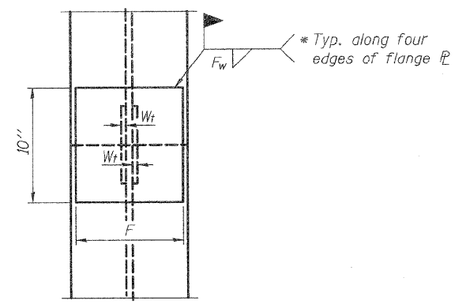

END VIEW

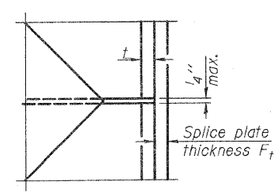

DETAIL D

WELDED PLATE FIELD SPLICE

Designation	F	F_t	F_w	W	W_t	W_w
HP 14x117	12 1/2"	1"	7/8"	7 3/4"	5/8"	1/2"
x102	12 1/2"	7/8"	3/4"	7 3/4"	5/8"	1/2"
x89	12 1/2"	3/4"	11/16"	7 3/4"	5/8"	1/2"
x73	12 1/2"	5/8"	9/16"	7 3/4"	5/8"	1/2"
HP 12x84	10"	7/8"	11/16"	6 1/2"	5/8"	1/2"
x74	10"	7/8"	11/16"	6 1/2"	5/8"	1/2"
x63	10"	5/8"	1/2"	6 1/2"	1/2"	3/8"
x53	10"	5/8"	1/2"	6 1/2"	1/2"	3/8"
HP 10x57	8"	3/4"	9/16"	5 1/4"	1/2"	3/8"
x42	8"	5/8"	9/16"	5 1/4"	1/2"	3/8"
HP 8x36	7"	5/8"	7/16"	4 1/4"	1/2"	3/8"

Note:
The steel H-piles shall be according to AASHTO M270 Grade 50.

HP PILE DETAILS FOR BEARINGS
FAP-310
SECTION 60-16-1, 42-1
JERSEY COUNTY
STATION 318+48.66
STRUCTURE 042-0026 (S.B.)
042-0027 (N.B.)

DESIGNED	R.K.M.
CHECKED	M.E.B.
DRAWN	P.W.S.
CHECKED	M.E.B.-R.K.M.

F-HP 11-1-09

HURST-ROSCHE ENGINEERS, INC.
601 NORTH BRUNS LANE
SPRINGFIELD, IL 62702
(217)-787-1199
FAX (217)-793-1199

RTE.	SECTION	COUNTY	SHEETS	NO.
310	60-16-1, 42-1	JERSEY	481	216
STA.		TO STA.		
FED. ROAD DIST. NO.	ILLINOIS	FED. AID PROJECT		

Sheet 32 of 35 Sheets

CONTRACT NO. 76318

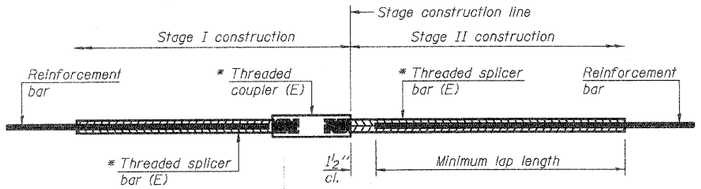

STANDARD BAR SPLICER ASSEMBLY

Minimum Lap Lengths				
Bar size to be spliced	Table 1	Table 2	Table 3	Table 4
3, 4	1'-5"	1'-11"	2'-1"	2'-4"
5	1'-9"	2'-5"	2'-7"	2'-11"
6	2'-1"	2'-11"	3'-1"	3'-6"
7	2'-9"	3'-10"	4'-2"	4'-8"
8	3'-8"	5'-1"	5'-5"	6'-2"
9	4'-7"	6'-5"	6'-10"	7'-9"

Table 1: Black bar, 0.8 Class C
Table 2: Black bar, Top bar lap, 0.8 Class C
Table 3: Epoxy bar, 0.8 Class C
Table 4: Epoxy bar, Top bar lap, 0.8 Class C

Threaded splicer bar length = min. lap length + 1½" + thread length

* Epoxy not required on Bar Splicer Assembly components used in conjunction with black bars.

Location	Bar size	No. assemblies required	Table for minimum lap length

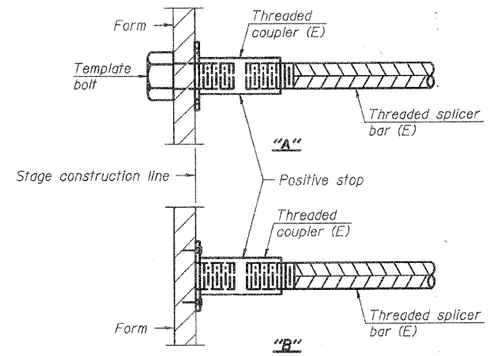

INSTALLATION AND SETTING METHODS

"A" : Set bar splicer assembly by means of a template bolt.
"B" : Set bar splicer assembly by nailing to wood forms or cementing to steel forms.
(E) : Indicates epoxy coating.

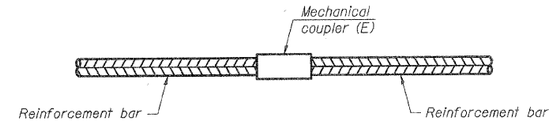

STANDARD MECHANICAL SPLICER

Location	Bar size	No. assemblies required

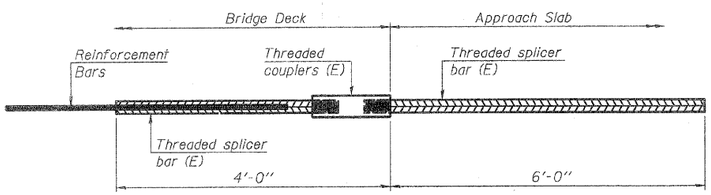

BAR SPLICER ASSEMBLY FOR #5 BAR ON INTEGRAL OR SEMI-INTEGRAL ABUTMENTS

No. required = 180

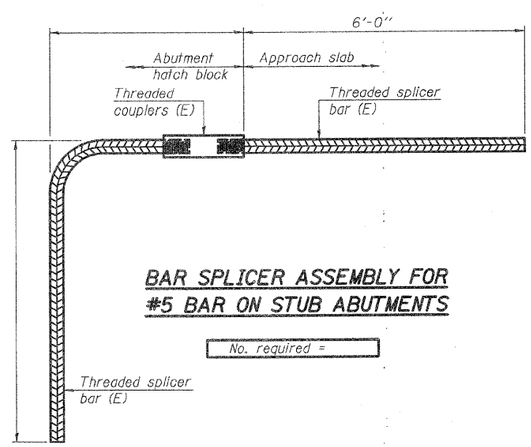

BAR SPLICER ASSEMBLY FOR #5 BAR ON STUB ABUTMENTS

No. required =

NOTES

Splicer bars shall be deformed with threaded ends and have a minimum 60 ksi yield strength.

All reinforcement shall be lapped and tied to the splicer bars.

Bar splicer assemblies shall be epoxy coated according to the requirements for reinforcement bars. See Section 508 of the Standard Specifications.

See special provision for Mechanical Splicers.

See approved list of bar splicer assemblies and mechanical splicers for alternatives.

BAR SPLICER ASSEMBLY DETAILS
FAP-310
SECTION 60-16-1, 42-1
JERSEY COUNTY
STATION 318+48.66
STRUCTURE 042-0026 (S.B.)
042-0027 (N.B.)

DESIGNED	R.K.M.
CHECKED	M.E.B.
DRAWN	P.W.S.
CHECKED	M.E.B.-R.K.M.

BSD-1 11-1-09

HURST - ROSCHE ENGINEERS, INC.
601 NORTH BRUNS LANE
SPRINGFIELD, IL 62702
(217)-787-1199
FAX (217)-793-1199

FAP ROUTE	SECTION	COUNTY	TOTAL SHEETS	SHEET NO
310	42-1-1B	JERSEY	481	217
STA.		TO STA.		
EXISTING CONDITIONS:				

Sheet 33 of 35 Sheets

CONTRACT NO. 76318

Illinois Department of Transportation — SOIL BORING LOG

Division of Highways
Illinois Department of Transportation

Page 1 of 2

Date 1/29/71

ROUTE FAP 310 DESCRIPTION US 67 over Piasa Creek LOGGED BY C. Hoffman

SECTION 42-1-1B LOCATION , SEC. 30, TWP. 7N, RNG. 10W, 3 PM

COUNTY Jersey DRILLING METHOD HAMMER TYPE

STRUCT. NO. 042-0002 (EXISTING)
Station 318+49.66

BORING NO. 5
Station 317+27
Offset 13.60ft Rt
Ground Surface Elev. 475.5 ft

Surface Water Elev. ft
Stream Bed Elev. ft

Groundwater Elev.:
First Encounter 453.6 ft ▽
Upon Completion ft
After Hrs. ft

Description	Elev.	DEPTH (ft)	BLOWS (/6")	UCS Qu (tsf)	MOIST (%)
Brown SILTY CLAY (with small pebbles and rock fragments)		-5	6	0.5 B	14
		-10	16	2.4 B	17
		-15	15	2.3 E	10
		-20	13	0.6 B	14
	460.1		17	2.1 S	18
Dark Gray SANDY SILT			24	2.3 E	11
		-20	5	0.6 B	22
Dark Gray SANDY SILT (continued)	453.6 ▽		14	0.8 S	18
Dark Gray CLAYEY SILT		-25	11	0.9 S	29
	448.6		6	1.0 B	30
Dark Gray CLAYEY slightly SANDY SILT		-30	6	1.0 B	30
	443.6		4	0.7 B	32
Gray fine SAND			20	N.C.	
	440.6	-35			
Brown and Tan LIMESTONE					
	437.6				
Gray hard SHALE					
	435.6	-40			

Illinois Department of Transportation — SOIL BORING LOG

Division of Highways
Illinois Department of Transportation

Page 1 of 1

Date 1/10/02

ROUTE FAP 310 DESCRIPTION FAP 310 over Piasa Creek LOGGED BY M. Tappan

SECTION 42-1-1B LOCATION SE 14, SEC. 30, TWP. T7N, RNG. R10W, 3 PM

COUNTY Jersey DRILLING METHOD HSA HAMMER TYPE 140# Auto

STRUCT. NO.
Station

BORING NO. PC-B1
Station 317+36
Offset 25.00ft LT
Ground Surface Elev. 463.6 ft

Surface Water Elev. 452.6 ft
Stream Bed Elev. N/A ft

Groundwater Elev.:
First Encounter 451.6 ft ▽
Upon Completion ft
After 24 Hrs. 453.6 ft ▽

Description	Elev.	DEPTH (ft)	BLOWS (/6")	UCS Qu (tsf)	MOIST (%)
Brownish Grey & Moist LOAM		-5	1 1 3	0.2 B	16
	458.1				
Brown Moist Med. SAND			1 2 2		
	456.1				
Brown Wet Med. SAND		-10	0 1 2		
	448.6	-15	0 1 2		
Brown Wet Med. to Coarse SAND, washed			0 1 1		
	446.1				
Gray Dirty Med. Sandy GRAVEL, washed		-20	0 1 2		
Gray Clean Med. SAND, washed			2 5 7		
	441.1				
Gray Coarse Sandy GRAVEL, washed		-25	3 10 Ti		
	438.1				
Blue Gray Moist Shaely Residuum w/Med. Limestone GRAVEL			7 13 20	4.3 S-10	23
		-30	45 100/2"	10.0+ E	22
	432.6				
Gray w/Poorly Indurated Argillaceous LIMESTONE			58 100/2"		
	430.6				
Auger Refusal in Gray Well Indurated Argillaceous LIMESTONE		-35	100 /4"		
		-40			

Illinois Department of Transportation — SOIL BORING LOG

Division of Highways
Illinois Department of Transportation

Page 1 of 2

Date 1/9/02

ROUTE FAP 310 DESCRIPTION FAP 310 over Piasa Creek LOGGED BY M. Tappan

SECTION 42-1-1B LOCATION SE 14, SEC. 30, TWP. T7N, RNG. R10W, 3 PM

COUNTY Jersey DRILLING METHOD HSA HAMMER TYPE 140# Auto

STRUCT. NO.
Station

BORING NO. PC-B2
Station 317+85
Offset 60.00ft LT
Ground Surface Elev. 463.3 ft

Surface Water Elev. 452.6 ft
Stream Bed Elev. N/A ft

Groundwater Elev.:
First Encounter No Encounter ft
Upon Completion ft
After 48 Hrs. 449.3 ft ▽

Description	Elev.	DEPTH (ft)	BLOWS (/6")	UCS Qu (tsf)	MOIST (%)
Brown Moist Fine to Med. SAND		-5	1 1 2		
	455.3				
Brown Wet Fine to Med. SAND		-10	0 1 1		
	452.3				
Brown & Gray Wet SILTY LOAM			0 0 0	0.0	27
	449.8				
Gray Wet SANDY LOAM		-15	0 1 1	0.0	25
	447.3				
Brown Med. Clean SAND			0 0 1		
	445.3				
Brown Med. Clean SAND, washed		-20	0 1		
Brown Med. Clean SAND, washed (continued)	442.8		1		
Gray Med. to Coarse SAND, washed w/some gravel			0 1 2		
	440.3				
Gray Coarse Sandy GRAVEL, washed		-25	5 9 3		
	437.3				
Dark Blue Gray Shaley Residuum w/Coarse Limestone GRAVEL			20 30 20/3"		
	434.8				
Gray Well Indurated Argillaceous LIMESTONE	434.3				
Borehole continued with rock coring.		-30			
		-40			

Illinois Department of Transportation — SOIL BORING LOG

Division of Highways
Illinois Department of Transportation

Page 2 of 2

Date 1/29/71

ROUTE FAP 310 DESCRIPTION US 67 over Piasa Creek LOGGED BY C. Hoffman

SECTION 42-1-1B LOCATION , SEC. 30, TWP. 7N, RNG. 10W, 3 PM

COUNTY Jersey DRILLING METHOD HAMMER TYPE

STRUCT. NO. 042-0002 (EXISTING)
Station 318+49.66

BORING NO. 5
Station 317+27
Offset 13.60ft Rt
Ground Surface Elev. 475.5 ft

Surface Water Elev. ft
Stream Bed Elev. ft

Groundwater Elev.:
First Encounter 453.6 ft ▽
Upon Completion ft
After Hrs. ft

END OF BORING

Illinois Department of Transportation — ROCK CORE LOG

Division of Highways
Illinois Department of Transportation

Page 2 of 2

Date 1/9/02

ROUTE FAP 310 DESCRIPTION FAP 310 over Piasa Creek LOGGED BY M. Tappan

SECTION 42-1-1B LOCATION SE 14, SEC. 30, TWP. T7N, RNG. R10W, 3 PM

COUNTY Jersey CORING METHOD Christensen NXB Wireline w/Water

STRUCT. NO.
Station

CORING BARREL TYPE & SIZE NXB

BORING NO. PC-B2
Station 317+85
Offset 60.00ft LT
Ground Surface Elev. 463.3 ft

Core Diameter 1.98 in
Top of Rock Elev. 434.80 ft
Begin Core Elev. 434.30 ft

Description	Elev.	DEPTH (ft)	CORE (#)	RECOVERY (%)	R.Q.D. (%)	CORE TIME (min/ft)	STRENGTH (tsf)
Light Gray V. Well Indurated Argillaceous LIMESTONE	434.30		1	96	29		
	433.50	-30					
Dark Gray V. Well Indurated Fossiliferous Argillaceous LIMESTONE		-35	2	100	33		
	424.50						
Boring Completed		-40					
		-45					

Note:
The Unconfined Compressive Strength (UCS) Failure Mode is indicated by (B-Bulge, S-Shear, P-Penetrometer)
The SPT (N value) is the sum of the last two blow values in each sampling zone (AASHTO T206)

HURST - ROSCHE ENGINEERS, INC.
601 NORTH BRUNS LANE
SPRINGFIELD, IL 62702
(217)-787-1199
FAX (217)-793-1199

ILLINOIS DEPARTMENT OF TRANSPORTATION

SOIL BORING LOGS

FAP ROUTE 310
SECTION 42-1-1B
JERSEY COUNTY

Illinois Department of Transportation
Division of Highways
Illinois Department of Transportation

SOIL BORING LOG

Page 1 of 1
Date 1/28/71

ROUTE FAP 310 DESCRIPTION US 67 over Piasa Creek LOGGED BY C. Hoffman
SECTION 42-1-1B LOCATION , SEC. 30, TWP. 7N, RNG. 10W, 3 PM
COUNTY Jersey DRILLING METHOD ______ HAMMER TYPE ______
STRUCT. NO. 042-0002 (EXISTING)
Station 318+48.66
BORING NO. 2
Station 317+97
Offset 23.00ft Lt
Ground Surface Elev. 463.5 ft
Surface Water Elev. ______ ft
Stream Bed Elev. ______ ft
Groundwater Elev.:
First Encounter 456.7 ft ▽
Upon Completion ______ ft
After ____ Hrs. ______ ft

		DEPTH (ft)	BLOWS (/6")	UCS Qu (tsf)	MOIST (%)
Brown SILT					
			5	0.4 S	23
	459.1				
Brown Medium SAND		-5			
			5	N.C.	
	456.7 ▽				
Brown SILT					
			4	0.4 B	31
	454.2				
Gray and Brown Clayey Slightly SILT		-10			
			2	0.3 B	30
	451.7				
Dark Gray SANDY SILT					
			3	0.1 B	26
	449.2				
Gray Medium SAND and Medium GRAVEL		-15			
			7	N.C.	
			5	N.C.	
	444.3				
		-20			

		DEPTH (ft)	BLOWS (/6")	UCS Qu (tsf)	MOIST (%)
Medium to coarse GRAVEL and Medium SAND (continued)					
			7	N.C.	
			4	N.C.	
		-25			
			28	N.C.	
	435.4		100+		
Gray Weathered SHALE					
	433.2	-30			
Gray to Dark Gray Hard LIMESTONE					
	428.2	-35			
END OF BORING					
		-40			

Illinois Department of Transportation
Division of Highways
Illinois Department of Transportation

SOIL BORING LOG

Page 1 of 1
Date 1/27/71

ROUTE FAP 310 DESCRIPTION US 67 over Piasa Creek LOGGED BY C. Hoffman
SECTION 42-1-1B LOCATION , SEC. 30, TWP. 7N, RNG. 10W, 3 PM
COUNTY Jersey DRILLING METHOD ______ HAMMER TYPE ______
STRUCT. NO. 042-0002 (EXISTING)
Station 318+48.66
BORING NO. 1
Station 318+11
Offset 16.20ft Lt
Ground Surface Elev. 475.4 ft
Surface Water Elev. ______ ft
Stream Bed Elev. ______ ft
Groundwater Elev.:
First Encounter 456.1 ft ▽
Upon Completion ______ ft
After ____ Hrs. ______ ft

		DEPTH (ft)	BLOWS (/6")	UCS Qu (tsf)	MOIST (%)
Brown SILTY CLAY Fill (with gravel)					
			10	1.8 E	11
		-5			
			11	1.8 E	13
			15	2.7 S	12
	466.1				
Gray SILTY CLAY (with gravel)		-10			
			15	1.1 S	14
	463.6				
Brown and Gray SILTY CLAY (with gravel)					
			14	1.5 B	19
		-15			
			25	3.2 S	15
	458.6				
Gray Slightly SANDY SILT					
			12	0.5 B	21
	456.1 ▽				
		-20			

		DEPTH (ft)	BLOWS (/6")	UCS Qu (tsf)	MOIST (%)
Gray fine SAND (continued)					
			6	N.C.	
	453.6				
Gray very SANDY SILT					
			2	0.1 E	24
	451.1				
Gray fine SAND and fine GRAVEL		-25			
	449.1		8	N.C.	
END OF BORING					
(BORING INCOMPLETE)		-30			
		-35			
		-40			

Illinois Department of Transportation
Division of Highways
Illinois Department of Transportation

SOIL BORING LOG

Page 1 of 1
Date 1/10/02

ROUTE FAP 310 DESCRIPTION FAP 310 over Piasa Creek LOGGED BY M. Tappan
SECTION 42-1-1B LOCATION SE 1/4, SEC. 30, TWP. T7N, RNG. R10W, 3 PM
COUNTY Jersey DRILLING METHOD HSA HAMMER TYPE 140# Auto
STRUCT. NO. ______
Station ______
BORING NO. PC-B3
Station 318+90
Offset 20.00ft LT
Ground Surface Elev. 463.9 ft
Surface Water Elev. 452.6 ft
Stream Bed Elev. N/A ft
Groundwater Elev.:
First Encounter 448.9 ft ▼
Upon Completion ______ ft
After 96 Hrs. 453.9 ft ▽

		DEPTH (ft)	BLOWS (/6")	UCS Qu (tsf)	MOIST (%)
Brown Moist Med. SAND					
			1		
		-5	2		
			2		
			1		
			1		
	455.9		2		
Brown Wet Med. SAND					
			0		
		▽-10	1		
	453.4		1		
Gray Wet Med. SAND					
			0		
			0		
	450.9		1		
Gray Wet Dirty Med. SAND					
			0		
		▼-15	0		
			1		
			0		
			0		
	445.9		1		
Gray Med. SAND w/some Pea Gravel					
			0		
		-20	4		

		DEPTH (ft)	BLOWS (/6")	UCS Qu (tsf)	MOIST (%)
	443.4		3		
Gray Med. Sandy GRAVEL					
			2		
			7		
	440.9		8		
Gray Med. Angular Limestone GRAVEL					
			5		
		-25	10		
			14		
	437.4				
Blue Gray Dry Clayey SHALE			11		
			27		9
	435.9		73/2"		
Gray Dry Fissile Calcareous SHALE					
			100/4"		
		-30			11
	432.9				
Dark Gray Well Indurated Argillaceous LIMESTONE w/ Interbedded Calcareous Shale seams.	431.9		100 /4"		
END OF BORING					
		-35			
		-40			

Illinois Department of Transportation
Division of Highways
Illinois Department of Transportation

SOIL BORING LOG

Page 1 of 1
Date 1/10/02

ROUTE FAP 310 DESCRIPTION FAP 310 over Piasa Creek LOGGED BY M. Tappan
SECTION 42-1-1B LOCATION SE 1/4, SEC. 30, TWP. T7N, RNG. R10W, 3 PM
COUNTY Jersey DRILLING METHOD HSA HAMMER TYPE 140# Auto
STRUCT. NO. ______
Station ______
BORING NO. PC-B3
Station 318+90
Offset 20.00ft LT
Ground Surface Elev. 463.9 ft
Surface Water Elev. 452.6 ft
Stream Bed Elev. N/A ft
Groundwater Elev.:
First Encounter 448.9 ft ▼
Upon Completion ______ ft
After 96 Hrs. 453.9 ft ▽

		DEPTH (ft)	BLOWS (/6")	UCS Qu (tsf)	MOIST (%)
Brown Moist Med. SAND					
			1		
		-5	2		
			2		
			1		
			1		
	455.9		2		
Brown Wet Med. SAND					
			0		
		▽-10	1		
	453.4		1		
Gray Wet Med. SAND					
			0		
			0		
	450.9		1		
Gray Wet Dirty Med. SAND					
			0		
		▼-15	0		
			1		
			0		
			0		
	445.9		1		
Gray Med. SAND w/some Pea Gravel					
			0		
		-20	4		

		DEPTH (ft)	BLOWS (/6")	UCS Qu (tsf)	MOIST (%)
	443.4		3		
Gray Med. Sandy GRAVEL					
			2		
			7		
	440.9		8		
Gray Med. Angular Limestone GRAVEL					
			5		
		-25	10		
			14		
	437.4				
Blue Gray Dry Clayey SHALE			11		
			27		9
	435.9		73/2"		
Gray Dry Fissile Calcareous SHALE					
			100/4"		
		-30			11
	432.9				
Dark Gray Well Indurated Argillaceous LIMESTONE w/ Interbedded Calcareous Shale seams.	431.9		100 /4"		
END OF BORING					
		-35			
		-40			

Illinois Department of Transportation
Division of Highways
Illinois Department of Transportation

SOIL BORING LOG

Page 1 of 1
Date 1/28/71

ROUTE FAP 310 DESCRIPTION US 67 over Piasa Creek LOGGED BY J. King
SECTION 42-1-1B LOCATION , SEC. 30, TWP. 7N, RNG. 10W, 3 PM
COUNTY Jersey DRILLING METHOD ______ HAMMER TYPE ______
STRUCT. NO. 042-0002 (EXISTING)
Station 318+48.66
BORING NO. 4
Station 318+93
Offset 18.00ft Rt
Ground Surface Elev. 458.8 ft
Surface Water Elev. ______ ft
Stream Bed Elev. ______ ft
Groundwater Elev.:
First Encounter 448.8 ft ▽
Upon Completion ______ ft
After ____ Hrs. ______ ft

		DEPTH (ft)	BLOWS (/6")	UCS Qu (tsf)	MOIST (%)
Brown SILT					
			8	0.8 S	7
		-5			
			7	1.0 S	13
	452.3				
Brown SANDY SILT					
			11	0.9 S	17
		▽-10			
			8	0.7 S	16
	447.3				
Brown Medium SILTY SAND					
			9	N.C.	
		-15			
			12	N.C.	
	442.3				
Brown SAND and GRAVEL					
			11	N.C.	
		-20			

		DEPTH (ft)	BLOWS (/6")	UCS Qu (tsf)	MOIST (%)
Brown SAND and GRAVEL (continued)					
			10	N.C.	
			32	N.C.	
	434.8				
Green CLAY TILL		-25			
			30	2.0 B	21
	432.3				
Green Weathered SHALE					
			100+		
	429.3				
Brown and Gray broken LIMESTONE (drilled)		-30			
	423.8	-35			
END OF BORING					
		-40			

FAP ROUTE	SECTION	COUNTY	TOTAL SHEETS	SHEET NO
310	42-1-1B	JERSEY	481	218

STA. TO STA.
EXISTING CONDITIONS:

Sheet 34 of 35 Sheets

CONTRACT NO. 76318

Note:
The "Strength" column represents the unlaxial compressive strength of the core sample (ASTM D-2938)

HR
HURST - ROSCHE
ENGINEERS, INC.
601 NORTH BRUNS LANE
SPRINGFIELD, IL 62702
(217)-787-1199
FAX (217)-793-1199

ILLINOIS DEPARTMENT OF TRANSPORTATION

SOIL BORING LOGS

FAP ROUTE 310
SECTION 42-1-1B
JERSEY COUNTY

FAP ROUTE	SECTION	COUNTY	TOTAL SHEETS	SHEET NO
310	42-1-1B	JERSEY	481	218
STA.		TO STA.		
EXISTING CONDITIONS:				

Sheet 34 of 35 Sheets

CONTRACT NO. 76318

SOIL BORING LOG

Illinois Department of Transportation
Division of Highways
Illinois Department of Transportation

Page 1 of 1

Date 1/28/71

ROUTE FAP 310 DESCRIPTION US 67 over Plaza Creek LOGGED BY C. Hoffman

SECTION 42-1-1B LOCATION , SEC. 30, TWP. 7N, RNG. 10W, 3 PM

COUNTY Jersey DRILLING METHOD HAMMER TYPE

STRUCT. NO. 042-0002 (EXISTING)
Station 318+48.66

BORING NO. 2
Station 317+97
Offset 23.00ft Lt
Ground Surface Elev. 463.5 ft

Surface Water Elev. ft
Stream Bed Elev. ft

Groundwater Elev.:
First Encounter 456.7 ft
Upon Completion ft
After Hrs. ft

Description	Elev.	Depth (ft)	Blows (/6")	Qu (tsf)	Moist (%)
Brown SILT	459.1		5	0.4 S	23
Brown Medium SAND	456.7	-5	5	N.C.	
Brown SILT	454.2		4	0.4 B	31
Gray and Brown Clayey Slightly SILT	451.7	-10	2	0.3 B	30
Dark Gray SANDY SILT	449.2		3	0.1 B	28
Gray Medium SAND and Medium GRAVEL	444.2	-15	7	N.C.	
		-20	5	N.C.	
Medium to coarse GRAVEL and Medium SAND (continued)			7	N.C.	
			4	N.C.	
		-25	26	N.C.	
Gray Weathered SHALE	435.4		100+		
	433.2	-30			
Gray to Dark Gray Hard LIMESTONE	428.2	-35			
END OF BORING		-40			

SOIL BORING LOG

Illinois Department of Transportation
Division of Highways
Illinois Department of Transportation

Page 1 of 1

Date 1/27/71

ROUTE FAP 310 DESCRIPTION US 67 over Plaza Creek LOGGED BY C. Hoffman

SECTION 42-1-1B LOCATION , SEC. 30, TWP. 7N, RNG. 10W, 3 PM

COUNTY Jersey DRILLING METHOD HAMMER TYPE

STRUCT. NO. 042-0002 (EXISTING)
Station 318+48.66

BORING NO. 1
Station 318+11
Offset 16.20ft Lt
Ground Surface Elev. 475.4 ft

Surface Water Elev. ft
Stream Bed Elev. ft

Groundwater Elev.:
First Encounter 456.1 ft
Upon Completion ft
After Hrs. ft

Description	Elev.	Depth (ft)	Blows (/6")	Qu (tsf)	Moist (%)
Brown SILTY CLAY Fill (with gravel)	466.1	-5	10	1.8 E	11
Gray SILTY CLAY (with gravel)	463.6	-10	15	1.8 E	13
Brown and Gray SILTY CLAY (with gravel)	458.6	-15	15	2.7 S	12
Gray Slightly SANDY SILT	456.1	-20	14	1.1 S	14
			25	1.5 B	19
			12	3.2 S	15
				0.5 B	21
Gray fine SAND (continued)	453.6		6	N.C.	
Gray very SANDY SILT	451.1		2	0.1 E	24
Gray fine SAND and fine GRAVEL	449.1	-25	8	N.C.	
END OF BORING					
(BORING INCOMPLETE)		-30			
		-35			
		-40			

SOIL BORING LOG

Illinois Department of Transportation
Division of Highways
Illinois Department of Transportation

Page 1 of 1

Date 1/10/02

ROUTE FAP 310 DESCRIPTION FAP 310 over Plaza Creek LOGGED BY M. Tappan

SECTION 42-1-1B LOCATION SE 14, SEC. 30, TWP. 7N, RNG. R10W, 3 PM

COUNTY Jersey DRILLING METHOD HSA HAMMER TYPE 140# Auto

STRUCT. NO.
Station

BORING NO. PC-B3
Station 318+90
Offset 20.00ft LT
Ground Surface Elev. 463.9 ft

Surface Water Elev. 452.6 ft
Stream Bed Elev. N/A ft

Groundwater Elev.:
First Encounter 448.9 ft
Upon Completion ft
After 96 Hrs. 453.9 ft

Description	Elev.	Depth (ft)	Blows (/6")	Qu (tsf)	Moist (%)
Brown Moist Med. SAND	455.9	-5	1 2 2		
Brown Wet Med. SAND	453.4	-10	1 1 2		
Gray Wet Med. SAND	450.9		0 0 1		
Gray Wet Dirty Med. SAND	445.9	-15	0 0 1		
Gray Med. SAND w/some Pea Gravel		-20	0 0 1		
	443.4		3		
Gray Med. Sandy GRAVEL	440.9		2 7 8		
Gray Med. Angular Limestone GRAVEL	437.4	-25	5 10 14		
Blue Gray Dry Clayey SHALE	435.9		11 27 73/2"		9
Gray Dry Fissile Calcareous SHALE	432.9	-30	100/4"		11
Dark Gray Well Indurated Argillaceous LIMESTONE w/ Interbedded Calcareous Shale seams.	431.9		100 /4"		
END OF BORING		-35			
		-40			

SOIL BORING LOG

Illinois Department of Transportation
Division of Highways
Illinois Department of Transportation

Page 1 of 1

Date 1/10/02

ROUTE FAP 310 DESCRIPTION FAP 310 over Plaza Creek LOGGED BY M. Tappan

SECTION 42-1-1B LOCATION SE 14, SEC. 30, TWP. 7N, RNG. R10W, 3 PM

COUNTY Jersey DRILLING METHOD HSA HAMMER TYPE 140# Auto

STRUCT. NO.
Station

BORING NO. PC-B3
Station 318+90
Offset 20.00ft LT
Ground Surface Elev. 463.9 ft

Surface Water Elev. 452.6 ft
Stream Bed Elev. N/A ft

Groundwater Elev.:
First Encounter 448.9 ft
Upon Completion ft
After 96 Hrs. 453.9 ft

Description	Elev.	Depth (ft)	Blows (/6")	Qu (tsf)	Moist (%)
Brown Moist Med. SAND	455.9	-5	1 2 2		
Brown Wet Med. SAND	453.4	-10	1 1 2		
Gray Wet Med. SAND	450.9		0 0 1		
Gray Wet Dirty Med. SAND	445.9	-15	0 0 1		
Gray Med. SAND w/some Pea Gravel		-20	0 0 1		
	443.4		3		
Gray Med. Sandy GRAVEL	440.9		2 7 8		
Gray Med. Angular Limestone GRAVEL	437.4	-25	5 10 14		
Blue Gray Dry Clayey SHALE	435.9		11 27 73/2"		9
Gray Dry Fissile Calcareous SHALE	432.9	-30	100/4"		11
Dark Gray Well Indurated Argillaceous LIMESTONE w/ Interbedded Calcareous Shale seams.	431.9		100 /4"		
END OF BORING		-35			
		-40			

SOIL BORING LOG

Illinois Department of Transportation
Division of Highways
Illinois Department of Transportation

Page 1 of 1

Date 1/28/71

ROUTE FAP 310 DESCRIPTION US 67 over Plaza Creek LOGGED BY J. King

SECTION 42-1-1B LOCATION , SEC. 30, TWP. 7N, RNG. 10W, 3 PM

COUNTY Jersey DRILLING METHOD HAMMER TYPE

STRUCT. NO. 042-0002 (EXISTING)
Station 318+48.66

BORING NO. 4
Station 318+93
Offset 19.00ft Rt
Ground Surface Elev. 458.6 ft

Surface Water Elev. ft
Stream Bed Elev. ft

Groundwater Elev.:
First Encounter 448.6 ft
Upon Completion ft
After Hrs. ft

Description	Elev.	Depth (ft)	Blows (/6")	Qu (tsf)	Moist (%)
Brown SILT	452.2	-5	8	0.8 S	7
Brown SANDY SILT	447.3	-10	7	1.0 S	13
Brown Medium SILTY SAND	442.3	-15	11	0.9 S	17
Brown SAND and GRAVEL		-20	9	0.7 S	16
			9	N.C.	
			12	N.C.	
			11	N.C.	
Brown SAND and GRAVEL (continued)	434.8		10	N.C.	
Green CLAY TILL	432.3	-25	32	N.C.	
Green Weathered SHALE	429.3		30	2.0 B	21
Brown and Gray broken LIMESTONE (drilled)	423.8	-30	100+		
END OF BORING		-35			
		-40			

Note:
The "Strength" column represents the unlaxial compressive strength of the core sample (ASTM D-2938)

HURST - ROSCHE ENGINEERS, INC.
601 NORTH BRUNS LANE
SPRINGFIELD, IL 62702
(217)-787-1199
FAX (217)-793-1199

ILLINOIS DEPARTMENT OF TRANSPORTATION

SOIL BORING LOGS

FAP ROUTE 310
SECTION 42-1-1B
JERSEY COUNTY

TYP ROUTE	SECTION	COUNTY	TOTAL SHEETS	SHEET NO
310	60-16-1, 42-1	JERSEY	481	219
STA.		TO STA.		
EXISTING CONDITIONS:				

Sheet 35 of 35 Sheets

CONTRACT NO. 76318

Illinois Department of Transportation — SOIL BORING LOG

Division of Highways
Illinois Department of Transportation

Page 1 of 1

Date 1/2/71

ROUTE FAP 310 DESCRIPTION US 67 over Piasa Creek LOGGED BY J. King

SECTION 42-1-1B LOCATION , SEC. 30, TWP. 7N, RNG. 10W, 3 PM

COUNTY Jersey DRILLING METHOD HAMMER TYPE

STRUCT. NO. 042-0002 (EXISTING)
Station 318+48.66

BORING NO. 3
Station 319+58
Offset 33.00ft Rt
Ground Surface Elev. 459.0 ft

Surface Water Elev. ft
Stream Bed Elev. ft

Groundwater Elev.:
First Encounter 449.1 ft
Upon Completion ft
After Hrs. ft

Description	Elev.	DEPTH (ft)	BLOWS (/6")	UCS Qu (tsf)	MOIST (%)
Brown SILTY CLAY					
			9	2.0 B	17
Brown SILT	455.0				
		-5			
			6	0.5 S	17
Brown Fine SAND	452.6				
			9	N.C.	
		-10			
			9	N.C.	
Brown SANDY CLAYEY SILT	447.6				
			6	0.5 B	20
Brown Coarse SAND and GRAVEL	445.1				
		-15			
			15	N.C.	
			2	N.C.	
		-20			
Brown Coarse SAND and GRAVEL (continued)	437.6		8	N.C.	
Brown and Gray SAND and GRAVEL					
			50	N.C.	
Green CLAY TILL	435.1				
		-25			
			14	1.6 B	22
Green SANDY SILTY SHALY TILL	432.6				
			100+	1.9 S	21
		-30	100+		
Brown and Gray Broken LIMESTONE (dry, hard) (drilled)	429.1				
END OF BORING	424.1	-35			

Illinois Department of Transportation — SOIL BORING LOG

Division of Highways
Illinois Department of Transportation

Page 1 of 2

Date 1/1/02

ROUTE FAP 310 DESCRIPTION FAP 310 over Piasa Creek LOGGED BY M. Tappan

SECTION 42-1-1B LOCATION SE 1/4, SEC. 30, TWP. T7N, RNG. R10W, 3 PM

COUNTY Jersey DRILLING METHOD HSA HAMMER TYPE 140# Auto

STRUCT. NO.
Station

BORING NO. PC-B4
Station 319+60
Offset 60.00ft LT
Ground Surface Elev. 463.8 ft

Surface Water Elev. 452.6 ft
Stream Bed Elev. N/A ft

Groundwater Elev.:
First Encounter Cored ft
Upon Completion ft
After 72 Hrs. 458.3 ft

Description	Elev.	DEPTH (ft)	BLOWS (/6")	UCS Qu (tsf)	MOIST (%)
Gray Moist SILTY LOAM					
			0		
		-5	1	0.1	26
			1	B	
	457.8				
Brown Wet SILTY CLAY LOAM					
			0		
			1	0.1	24
	455.8		0	B	
Brown Moist SILTY CLAY LOAM					
			0		
		-10	0	0.2	22
			1	B	
	452.3				
Brownish Gray Argillaceous LIMESTONE, weathered			7		
			17		
			19		
	449.8				
Borehole continued with rock coring.		-15			
		-20			

Illinois Department of Transportation — SOIL BORING LOG

Division of Highways
Illinois Department of Transportation

Page 1 of 2

Date 1/1/02

ROUTE FAP 310 DESCRIPTION FAP 310 over Piasa Creek LOGGED BY M. Tappan

SECTION 42-1-1B LOCATION SE 1/4, SEC. 30, TWP. T7N, RNG. R10W, 3 PM

COUNTY Jersey DRILLING METHOD HSA HAMMER TYPE 140# Auto

STRUCT. NO.
Station

BORING NO. PC-B5
Station 319+61
Offset 20.00ft LT
Ground Surface Elev. 464 ft

Surface Water Elev. 452.6 ft
Stream Bed Elev. N/A ft

Groundwater Elev.:
First Encounter Cored ft
Upon Completion ft
After – Hrs. Plugged ft

Description	Elev.	DEPTH (ft)	BLOWS (/6")	UCS Qu (tsf)	MOIST (%)
Brown & Gray V. Moist SILTY LOAM					
			2		
		-5	2	0.2	27
	458.5		3	B	
Brown & Gray V. Moist SILTY LOAM w/Loam Seams					
			0		
			1	0.2	29
	456.0		2	B	
Brown & Gray V. Moist SILTY LOAM w/Loam Seams (Iron Oxidized)					
			0		
		-10	1	0.3	31
	453.0		2	B	
Gray V. Moist SILTY CLAY LOAM					
			0		
			0	0.1	32
	451.0		0	B	
Gray & Brown V. Moist SILTY CLAY					
			0		
		-15	3	0.3	31
	448.3		1	B	
Borehole continued with rock coring.		-20			

Illinois Department of Transportation — ROCK CORE LOG

Division of Highways
Illinois Department of Transportation

Page 2 of 2

Date 1/1/02

ROUTE FAP 310 DESCRIPTION FAP 310 over Piasa Creek LOGGED BY M. Tappan

SECTION 42-1-1B LOCATION SE 1/4, SEC. 30, TWP. T7N, RNG. R10W, 3 PM

COUNTY Jersey CORING METHOD Christensen NXB Wireline w/Water

STRUCT. NO.
Station

BORING NO. PC-B4
Station 319+60
Offset 60.00ft LT
Ground Surface Elev. 463.8 ft

CORING BARREL TYPE & SIZE NXB

Core Diameter 1.88 in
Top of Rock Elev. 452.30 ft
Begin Core Elev. 449.80 ft

Description	Elev.	DEPTH (ft)	CORE (#)	RECOVERY (%)	R.Q.D. (%)	CORE TIME (min/ft)	STRENGTH (tsf)
Light Gray Mod. Indurated Macrocrystalline LIMESTONE	449.80		1	60	8		
		-15					
	447.40						
Light Brown Poorly Indurated V. Weathered Argillaceous LIMESTONE w/grayish brown very poor indurated v. weathered Clayey Shale seams							
	445.00		2	98	29		
Tannish Gray to Gray Mod. Indurated SILTSONE		-20					
	442.50						
Dark Gray Mod. Indurated Argillaceous LIMESTONE w/1" Quartz seam (secondary mineralization)							
	439.70		3	100	33		
Dark Gray Well Indurated Calcareous SHALE		-25					
	435.60						
Boring Completed		-30					

Illinois Department of Transportation — ROCK CORE LOG

Division of Highways
Illinois Department of Transportation

Page 2 of 2

Date 1/1/02

ROUTE FAP 310 DESCRIPTION FAP 310 over Piasa Creek LOGGED BY M. Tappan

SECTION 42-1-1B LOCATION SE 1/4, SEC. 30, TWP. T7N, RNG. R10W, 3 PM

COUNTY Jersey CORING METHOD Christensen NXB Wireline w/Water

STRUCT. NO.
Station

BORING NO. PC-B5
Station 319+61
Offset 20.00ft LT
Ground Surface Elev. 464 ft

CORING BARREL TYPE & SIZE NXB

Core Diameter 1.88 in
Top of Rock Elev. 448.30 ft
Begin Core Elev. 448.30 ft

Description	Elev.	DEPTH (ft)	CORE (#)	RECOVERY (%)	R.Q.D. (%)	CORE TIME (min/ft)	STRENGTH (tsf)
Gray Mod. Indurated Fossiliferous Macrocrystalline LIMESTONE	448.30		1	98	27		
w/vertical fracturing							
	445.70						
Grayish Brown Weathered Poor to Moderately Indurated Argillaceous LIMESTONE							
	444.40	-20					
Dark Gray Mod. Indurated SILTSTONE			2	100	27		
	441.90						
Brownish Gray Mod. Indurated Macrocrystalline Fossiliferous LIMESTONE							
	439.90						
Gray Mod. to Well Indurated Macrocrystalline Fossiliferous LIMESTONE		-25					
	438.70						
Boring Completed		-30					
		-35					

Note:
The Unconfined Compressive Strength (UCS) Failure Mode is indicated by (B-Bulge, S-Shear, P-Penetrometer).
The SPT (N value) is the sum of the last two blow values in each sampling zone (AASHTO T206)

HURST - ROSCHE ENGINEERS, INC.
601 NORTH BRUNS LANE
SPRINGFIELD, IL 62702
(217)-787-1199
FAX (217)-793-1199

ILLINOIS DEPARTMENT OF TRANSPORTATION

SOIL BORING LOGS

FAP ROUTE 310
SECTION 60-16-1, 42-1
JERSEY COUNTY

STATE OF ILLINOIS
DEPARTMENT OF TRANSPORTATION

F.A. ROUTE NO.	SECTION	COUNTY	TOTAL SHEETS	SHEET NO.
578	+	Jersey	165	71

(253,49) RS-2, 253(GK-2 47-1B, 47-2B

BM: Chiseled □ on lower part of the North Abutment East side of bridge Elev = 470.92.

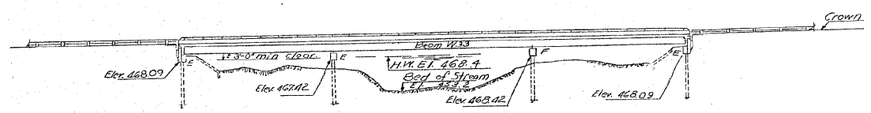

ELEVATION

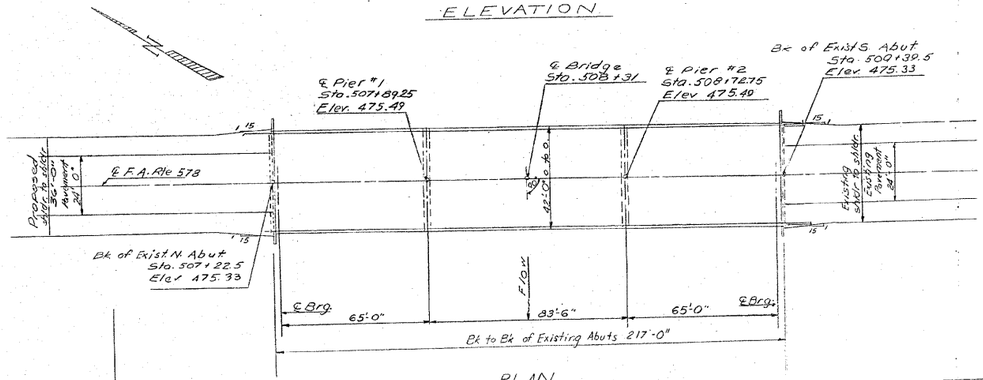

PLAN

PROPOSED PROFILE OF F.A. RTE 578

WATERWAY INFORMATION
Drainage Area 44.3 sq mi
Character: hilly, 60% wooded, 40% cultivated
Present Opening (50 yr flood) 2430 sq ft

Ordinary Water El. 453.9
HW El. 468.4
$Q_{(100)}$ = 9588 cfs

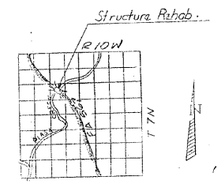

LOCATION SKETCH

GENERAL NOTES

Plan dimensions and details relative to existing structure have been taken from existing plans and are subject to nominal construction variations. It shall be the Contractor's responsibility to verify such dimensions and details in the field and make necessary approved adjustments prior to construction or ordering of materials. Such variations shall not be cause for additional compensation for a change in the scope of the work, however, the Contractor will be paid for the quantity actually furnished at the unit price bid for the work.

GL NOTES

All reinforcement bars shall be lapped 24 diameters unless otherwise shown.

Calculated weight of Structural Steel = 266,950 Pounds - This information is for Cleaning and Painting Steel Bridge

Expansion joint plates and attached bars shall be shop painted with one coat of dull orange primer.

The concrete rail section above the mandatory construction joint at the top of the slab shall be constructed of Class X Concrete, except the aggregates shall conform to the requirements of Hardrail Concrete.

Prior to Paint, all steel including bearings & diaphragms shall be Cleaned as specified in the Special Provisions.

Location Of Deck Slab Repair (Partial Depth) shall be determined in the Field by the Engineer

TOTAL BILL OF MATERIAL

Item	Unit	Total
Class X Concrete	Cu. Yd	35.0
Bridge Deck Overlay Removal	Sq. Yd	920.
Floor Drain Extensions	Each	36
Bridge Deck Concrete Overlay	Sq. Yd	920
Concrete Removal	Cu. Yd.	34
Reinforcement Bars (Epoxy Coated)	Pounds	2622
Protective Coat	Sq. Yd	1016
Concrete Bridge Deck Scarification (1/4 Inch)	Sq. Yd.	920.
Temporary Concrete Barrier	Lin. Ft.	510.
Temporary Concrete Barrier Terminal Section	Each	2
Relocate Temporary Concrete Barrier	Lin. Ft	524
Aluminum Railing	Lin. Ft	217
Deck Slab Repair (Full Depth, TYPE I)	Sq. yd	10
Repair Concrete Structures	Sq. Ft.	50
Furnishing and Erecting Structural Steel	Pounds	1576
Neoprene Expansion Joint 2"	Lin. Ft	42
Preformed Joint Seal 2 1/2"	Lin. Ft	42
Cleaning and Painting Steel Bridge	L. Sum	1
Deck Slab Repair (Partial Depth)	Sq. yd.	20

GENERAL PLAN & ELEVATION
F.A. RTE. 578 OVER PIASA CREEK
F.A. RTE. 578 SECTION 253 BR-1
JERSEY CO.
STATION 508+31

Revised General Notes 10-26-87 RAB

(SN 042-0002)

FAP ROUTE 310 (US 67)
SECTION 60-16-1-1B
MADISON COUNTY

DESIGNED -	JMB
CHECKED -	TES
DRAWN -	R KING
CHECKED -	TES

HOMER L. CHASTAIN & ASSOCIATES, LLP
CONSULTING ENGINEERS
DECATUR (217) 422-8544
CHICAGO (773) 714-0050
ROCKFORD (815) 489-0050
184-001397

FOR INFORMATION ONLY

SHEET NO. 1 OF 5 SHEETS	F.A.P. RTE.	SECTION	COUNTY	TOTAL SHEETS	SHEET NO.
	310	60-16-1-1B	MADISON	481	220
	FAP ROUTE 310 (US 67)		CONTRACT NO. 76318		
	FED. ROAD DIST. NO.	ILLINOIS	FED. AID PROJECT		

STATE OF ILLINOIS
DEPARTMENT OF TRANSPORTATION

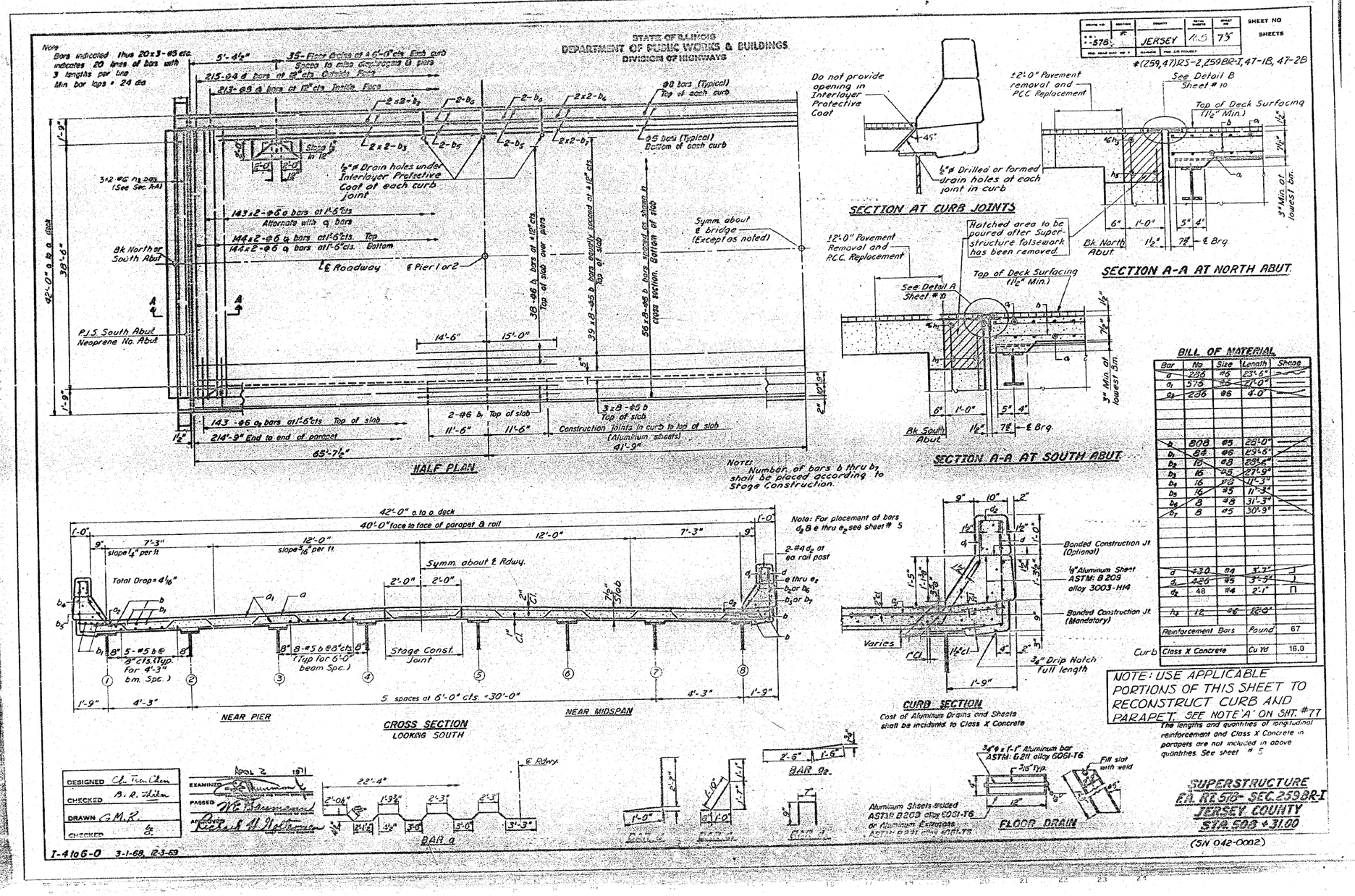

DESIGNED	JMB
CHECKED	TES
DRAWN	R KING
CHECKED	TES

HOMER L. CHASTAIN & ASSOCIATES, LLP
CONSULTING ENGINEERS
DECATUR (217) 422-8544
CHICAGO (773) 714-0050
ROCKFORD (815) 489-0050
184-001397

FOR INFORMATION ONLY

FAP ROUTE 310 (US 67)
SECTION 60-16-1-1B
MADISON COUNTY

SHEET NO. 2 OF 5 SHEETS	F.A.P. RTE.	SECTION	COUNTY	TOTAL SHEETS	SHEET NO.
	310	60-16-1-1B	MADISON	481	221
	FAP ROUTE 310 (US 67)		CONTRACT NO. 76318		
	FED. ROAD DIST. NO.	ILLINOIS	FED. AID PROJECT		

STATE OF ILLINOIS
DEPARTMENT OF TRANSPORTATION

STATE OF ILLINOIS
DEPARTMENT OF PUBLIC WORKS & BUILDINGS
DIVISION OF HIGHWAYS

ROUTE NO.	SECTION	COUNTY	TOTAL SHEETS	PROJ. NO.
F.A.P. 378	257-2R	JERSEY	145	76

SHEET NO.
SHEETS

*(259,41)RS-2,259BR-I,47-1B, 47-2B

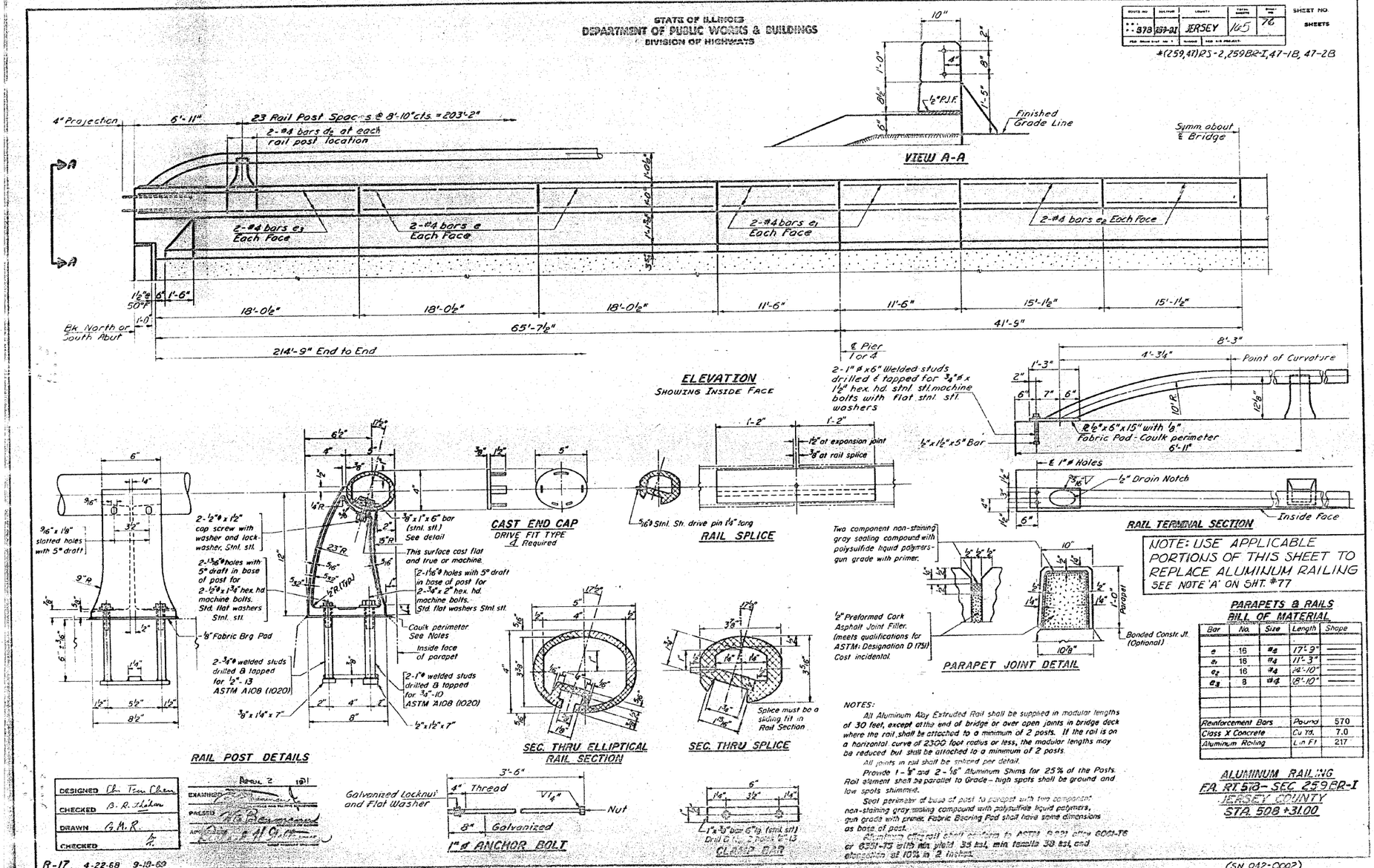

NOTE: USE APPLICABLE PORTIONS OF THIS SHEET TO REPLACE ALUMINUM RAILING SEE NOTE 'A' ON SHT. #77

NOTES:

All Aluminum Alloy Extruded Rail shall be supplied in modular lengths of 30 feet, except at the end of bridge or over open joints in bridge deck where the rail shall be attached to a minimum of 2 posts. If the rail is on a horizontal curve of 2300 foot radius or less, the modular lengths may be reduced but shall be attached to a minimum of 2 posts.

All joints in rail shall be sealed per detail.

Provide 1 - ⅛" and 2 - 1/16" Aluminum Shims for 25% of the Posts. Rail element shall be parallel to Grade - high spots shall be ground and low spots shimmed.

Seal perimeter of base of post to parapet with two component non-staining gray sealing compound with polysulfide liquid polymers, gun grade with primer. Fabric Bearing Pad shall have same dimensions as base of post.

Aluminum extruded rail shall conform to ASTM B221 alloy 6061-T6 or 6351-T5 with min. yield 35 ksi, min. tensile 38 ksi and elongation at 10% in 2 inches.

PARAPETS & RAILS
BILL OF MATERIAL

Bar	No.	Size	Length	Shape
e	16	#8	17'-9"	
e_1	16	#4	11'-3"	
e_2	16	#4	24'-10"	
e_3	8	#4	18'-10"	
Reinforcement Bars		Pound	570	
Class X Concrete		Cu. Yd.	7.0	
Aluminum Railing		Lin. Ft.	217	

ALUMINUM RAILING
FA. RT. 510 - SEC. 259BR-I
JERSEY COUNTY
STA. 508+31.00

DESIGNED	Ch. Tien Chen
CHECKED	B. R. Itchen
DRAWN	G.M.R.
CHECKED	

EXAMINED
PASSED
APPROVED

R-17 4-22-68 9-18-69

(SN 042-0002)

FAP ROUTE 310 (US 67)
SECTION 60-16-1-1B
MADISON COUNTY

DESIGNED -	JMB
CHECKED -	TES
DRAWN -	R KING
CHECKED -	TES

HOMER L. CHASTAIN & ASSOCIATES, LLP
CONSULTING ENGINEERS
DECATUR (217) 422-8544
CHICAGO (773) 714-0050
ROCKFORD (815) 489-0050
184-001397

FOR INFORMATION ONLY

SHEET NO. 3 OF 5 SHEETS	F.A.P. RTE.	SECTION	COUNTY	TOTAL SHEETS	SHEET NO.
	310	60-16-1-1B	MADISON	481	222
	FAP ROUTE 310 (US 67)		CONTRACT NO. 76318		
	FED. ROAD DIST. NO.	ILLINOIS	FED. AID PROJECT		

STATE OF ILLINOIS
DEPARTMENT OF TRANSPORTATION

S.M. NAIL AND WASHER IN ROOT OF 24" ELM ~ 120' FT. LEFT
STATION 503+83 ~ ELEVATION 462.73
NO EXISTING STRUCTURE

STATE OF ILLINOIS
DEPARTMENT OF PUBLIC WORKS & BUILDINGS
DIVISION OF HIGHWAYS

ROUTE	SECTION	COUNTY	TOTAL SHEETS	SHEET NO.
F.A.P. 310	60-16-1-1B	Jersey Madison	10.3	94

FED. ROAD DIST. NO. 7 | ILLINOIS | FED. AID PROJECT - 87C

SHEET NO. 1
4 SHEETS

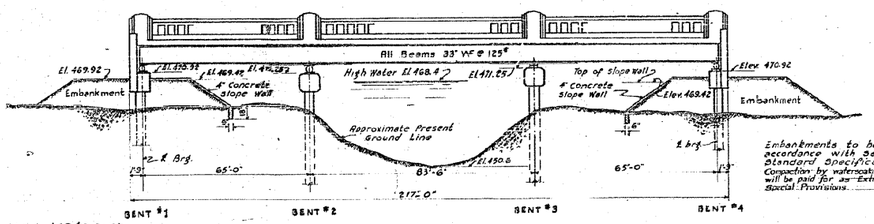

ELEVATION

Embankments to be placed in accordance with Section 13 of the Standard Specifications. Compaction by watersoaking, if required, will be paid for as Extra Work. See Special Provisions.

Embankments Estimated 1040 Cu. Yds. To be placed as shown before Superstructure is placed. Material for Embankments to be taken from roadway excavation between stations 501+00 and 505+00. Estimated Earth Excavation for Embankments. 1240 Cu. Yds.

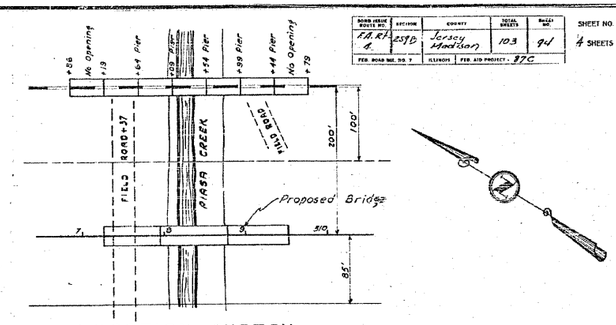

LOCATION SKETCH

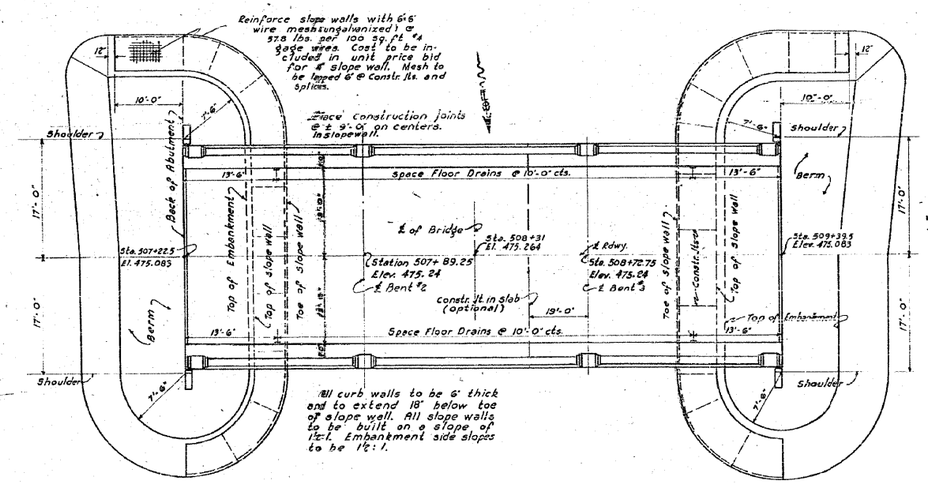

PLAN

TOTAL BILL OF MATERIAL

ITEM		SUPER-STRUCTURE	SUB-STRUCTURE	TOTALS
Handrail Concrete	Cu.Yds.	16.2		16.2
Class X Concrete	Cu.Yds.	174.0	46.9	220.9
Reinforcement Bars	Lbs.	48,760	3420	52,180
Structural Steel	Lbs.	195,700		195,700
Slope wall	Sq.Yds.		550	550
Name Plate	Each	one		one
16" Precast Conc. Piles (35'-0" lg)	Lin.Ft.		420	420
18" Precast Conc. Piles (35'-0" lg)	Lin.Ft.		560	560
Test Piles (18")	Each		one	one
Test Piles (16")	Each		one	one
Earth Excavation	Cu.Yds.		1240	1240

GENERAL NOTES

Class X Concrete shall be used thru-out. The Concrete Floor shall be poured in one continuous operation within the limits of the construction joints shown and shall be finished in accordance with Article 57.3 (e) of the Standard Specifications.

Aggregate which is to be used in handrails must be absolutely free of chert, flint, limonite, lignite, and soft sandstone.

Rivets ⅞" Holes 15/16" except as noted. Tight fit ribbed bolts may be used in place of field rivets as per specifications.

Structural steel shall be painted one shop coat of blue lead paint and two field coats of white lead paint. Steel surfaces in contact with concrete and contact surfaces of shop connected steel shall not be painted. All paint shall be furnished by the Department.

Inspection by the Illinois Division of Highways before painting.

Rollers are included as structural steel. See Special Provisions for painting of material.

Welding shall comply with the Specifications of the American Welding Society for Fusion Welding of Highway and Railway Bridges.

Embankment around abutments shall be made from roadway excavation before superstructure is placed.

The contractor shall drive two test piles as directed by the Engineer before casting the remainder of piling.

Anchor Bolts to be set before erecting diaphragms

BORING DATA

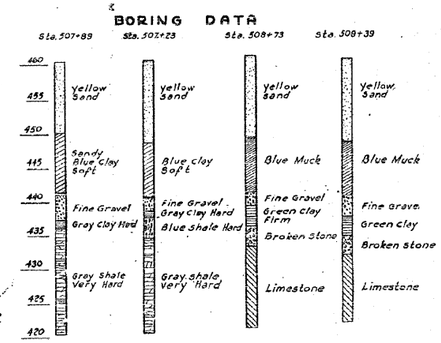

Note:- Boring data is shown only as a guide to bidders in estimating soil conditions which may be encountered in the work. Borings are taken on ℄ of Roadway.

WATERWAY INFORMATION

DRAINAGE AREA	28,350 ACRES
ASSUMED 'C' IN TALBOT'S FORMULA	0.75
EFFECTIVE OPENING BELOW HIGH WATER:	
OPENING REQUIRED BY FORMULA	1638 ft²
PROPOSED OPENING	1765 ft²

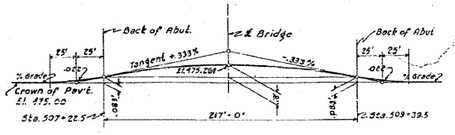

CAMBER DIAGRAM

STANDARD	COMPUTED N.J. Wheeler	EXAMINED 8-5-88
	CHECKED P.D. Freeman	
	DRAWN N.J.W. C.L. HAZLETT	PASSED
	CHECKED P.D.F.	
SPECIAL	ASSEMBLED	APPROVED
	CHECKED	

PROJECT 87-C
PIASA CREEK BRIDGE
F.A. RTE. 4 ~ SEC. 259-B
JERSEY COUNTY
STATION 508+31

I-20 Loading

FAP ROUTE 310 (US 67)
SECTION 60-16-1-1B
MADISON COUNTY

DESIGNED -	JMB
CHECKED -	TES
DRAWN -	R KING
CHECKED -	TES

HOMER L. CHASTAIN & ASSOCIATES, LLP
CONSULTING ENGINEERS
DECATUR (217) 422-8544
CHICAGO (773) 714-0050
ROCKFORD (815) 489-0050
184-001397

FOR INFORMATION ONLY

SHEET NO. 4 OF 5 SHEETS	F.A.P. RTE.	SECTION	COUNTY	TOTAL SHEETS	SHEET NO.
	310	60-16-1-1B	MADISON	481	223
	FAP ROUTE 310 (US 67)		CONTRACT NO. 76318		
	FED. ROAD DIST. NO.	ILLINOIS	FED. AID PROJECT		

STATE OF ILLINOIS
DEPARTMENT OF TRANSPORTATION

STATE OF ILLINOIS
DEPARTMENT OF PUBLIC WORKS & BUILDINGS
DIVISION OF HIGHWAYS

ROUTE NO.	SECTION	COUNTY	TOTAL SHEETS	SHEET NO.
FA RI-H-	V-1B	Jersey Madison	123	97
FED. ROAD DIST. NO. 7	ILLINOIS	FED. AID PROJECT - 87C		

SHEET NO. 4
SHEETS 4

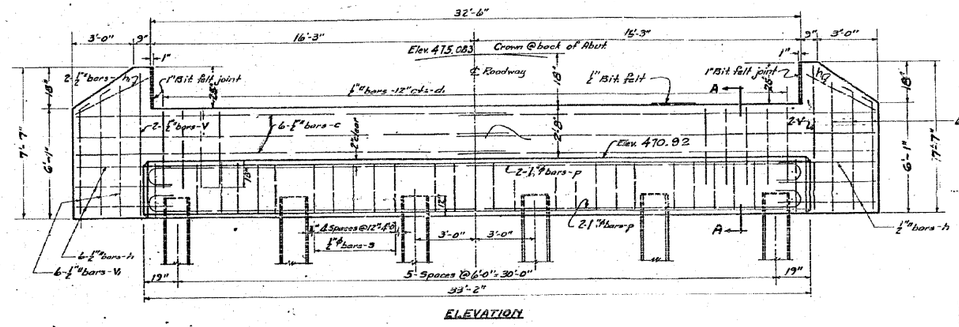

ELEVATION

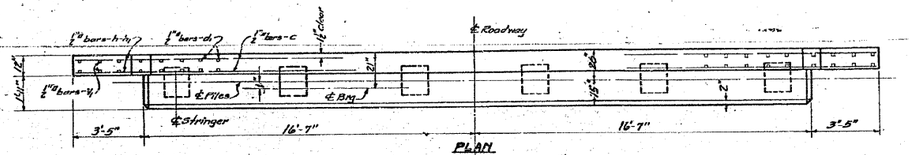

PLAN
ABUTMENTS BENTS #1 & #4

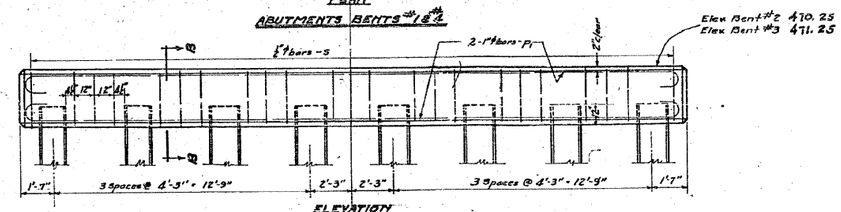

ELEVATION

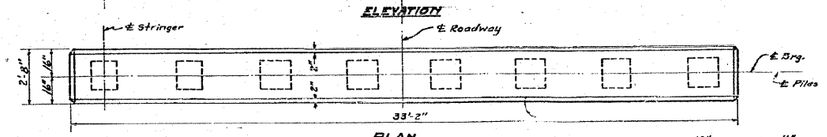

PLAN
BENTS #2 & #3

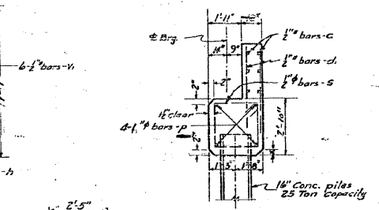

SECTION A-A

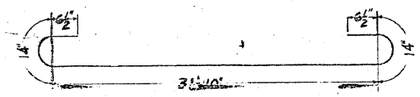

DETAIL 1"ϕ BAR-p

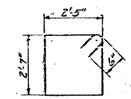

DETAIL ½"ϕ BAR-s₁

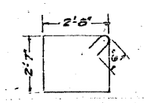

DETAIL ½"ϕ BAR-s

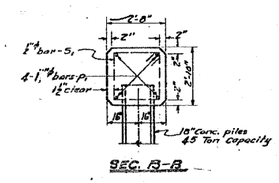

SEC. B-B

BILL OF MATERIAL

Bar	No.	Size	Length
c	24	½"ϕ	21'-0"
d₁	128	½"ϕ	3'-9"
h	24	½"ϕ	4'-9"
h₁	8	½"ϕ	3'-6"
V	8	½"ϕ	7'-0"
V₁	24	½"ϕ	7'-3"
s	54	½"ϕ	11'-8"
s₁	46	½"ϕ	11'-0"
p	16	1"ϕ	35'-3"
Class X Concrete			Cu. Yds. 45.3
Reinforcement Bars			Lbs. 3420
16" Precast Conc. Piles (35'lg)			Lin. Ft. 420
18" Precast Conc. Piles (35'lg)			Lin. Ft. 560
16" Test Pile			Each One
18" Test Pile			Each One

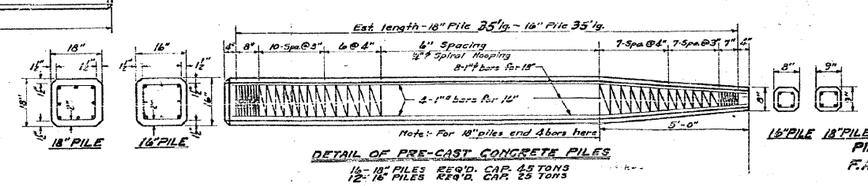

DETAIL OF PRE-CAST CONCRETE PILES
½- 18" PILES REQ'D. CAP. 45 TONS
½- 16" PILES REQ'D. CAP. 25 TONS

STANDARD	COMPUTED N.J. Wheeler	EXAMINED 8-3-1938
	CHECKED C.D. Freeman	
	DRAWN N.J.W. L.B. Diver	
	CHECKED C.D.F.	
SPECIAL	ASSEMBLED	
	CHECKED	

PROJ. BT-C
PIASA CREEK BRIDGE
F.A.R.T. 4 ~ SEC. 239-B
JERSEY COUNTY
STA. 508+31

FAP ROUTE 310 (US 67)
SECTION 60-16-1-1B
MADISON COUNTY

DESIGNED -	JMB
CHECKED -	TES
DRAWN -	R KING
CHECKED -	TES

HOMER L. CHASTAIN & ASSOCIATES, LLP
CONSULTING ENGINEERS
DECATUR (217) 422-8544
CHICAGO (773) 714-0050
ROCKFORD (815) 489-0050
184-001397

FOR INFORMATION ONLY

SHEET NO. 5 OF 5 SHEETS	F.A.P. RTE.	SECTION	COUNTY	TOTAL SHEETS	SHEET NO.
	310	60-16-1-1B	MADISON	481	224
	FAP ROUTE 310 (US 67)		CONTRACT NO. 76318		
	FED. ROAD DIST. NO.	ILLINOIS	FED. AID PROJECT		

F.A. RTE.	SECTION	COUNTY	TOTAL SHEETS	SHEET NO.
310	60-16-1&1B, 42-1&1B	MADISON/ JERSEY	481	225
STA.		TO STA.		
FED. ROAD DIST. NO.	ILLINOIS	FED. AID PROJECT		

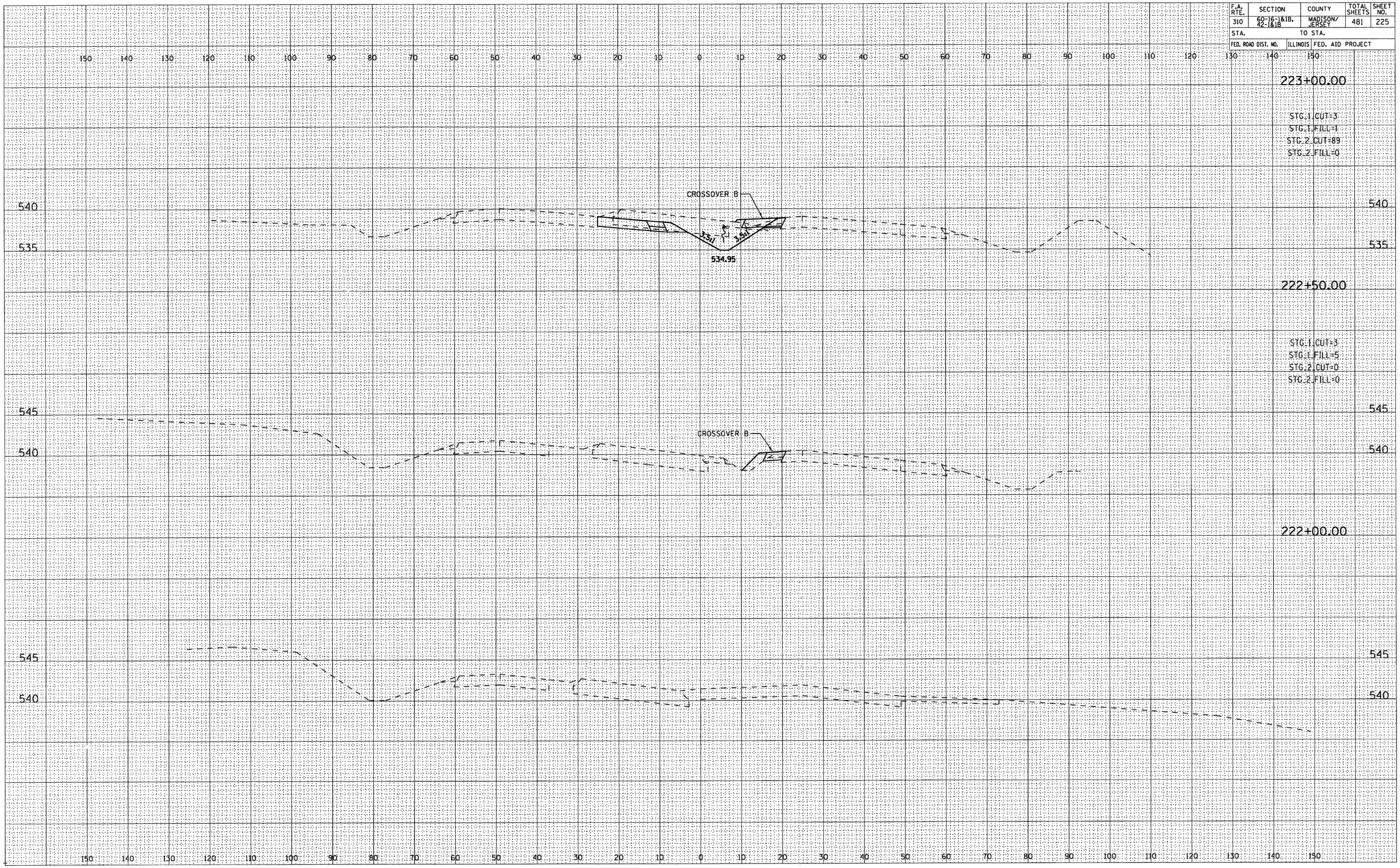

FINAL SURVEY		BY	DATE
NOTE BOOK NO.	SURVEYED		
	PLOTTED		
	TEMPLATE		
	AREAS		
	AREAS CHECKED		

ORIGINAL SURVEY		BY	DATE
NOTE BOOK NO.	SURVEYED		
	PLOTTED		
	TEMPLATE		
	AREAS		
	AREAS CHECKED		

F.A. RTE.	SECTION	COUNTY	TOTAL SHEETS	SHEET NO.
310	60-16-1&1B, 42-1&1B	MADISON/ JERSEY	481	226
STA.		TO STA.		
FED. ROAD DIST. NO.	ILLINOIS	FED. AID PROJECT		

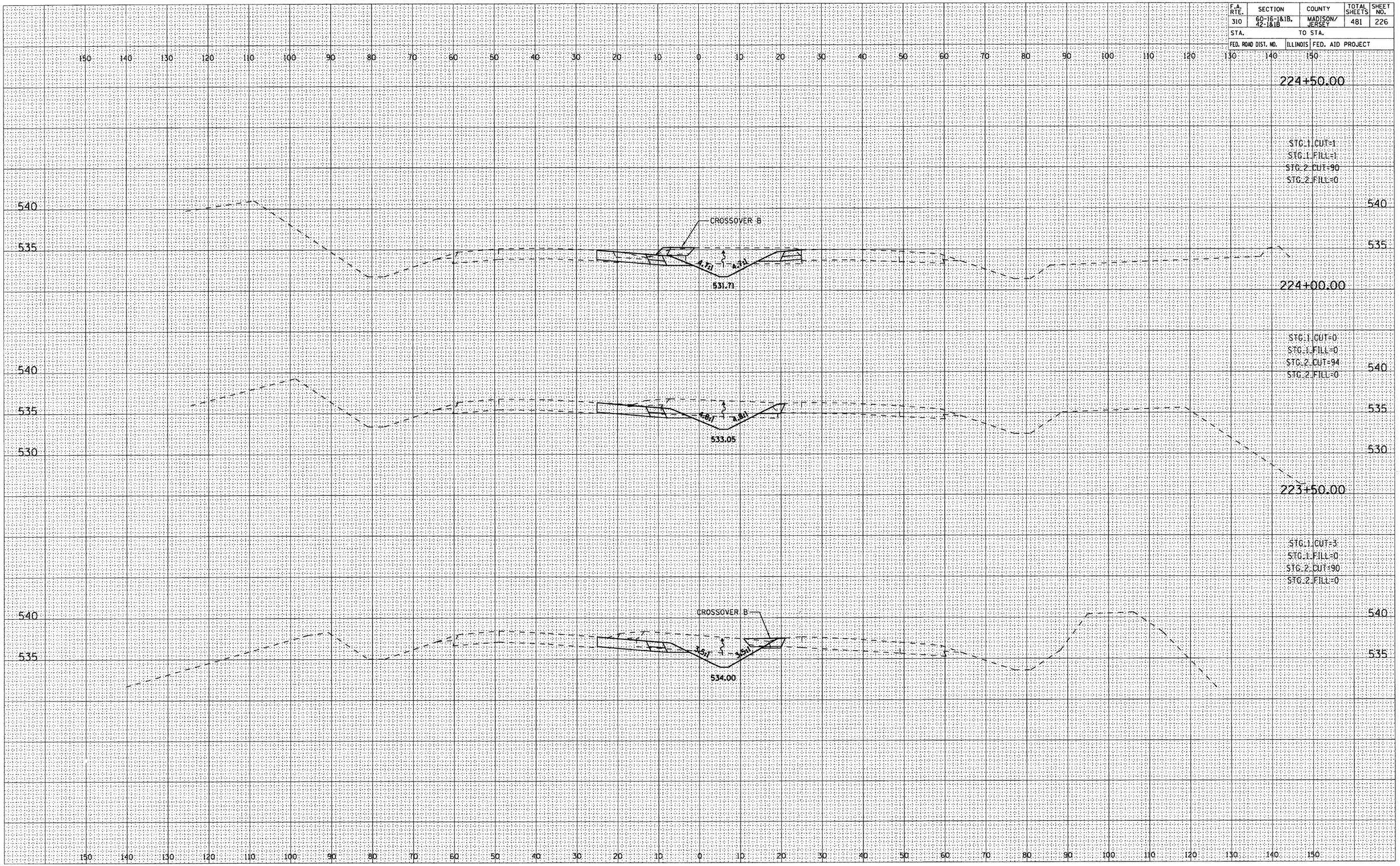

FINAL SURVEY	BY	DATE
NOTE BOOK NO.	SURVEYED	
	PLOTTED	
	TEMPLATE	
	AREAS	
	AREAS CHECKED	

ORIGINAL SURVEY	BY	DATE
NOTE BOOK NO.	SURVEYED	
	PLOTTED	
	TEMPLATE	
	AREAS	
	AREAS CHECKED	

FAP ROUTE 310

F.A. RTE.	SECTION	COUNTY	TOTAL SHEETS	SHEET NO.
310	60-16-1&1B, 42-1&1B	MADISON/ JERSEY	481	227
STA.		TO STA.		
FED. ROAD DIST. NO.	ILLINOIS	FED. AID PROJECT		

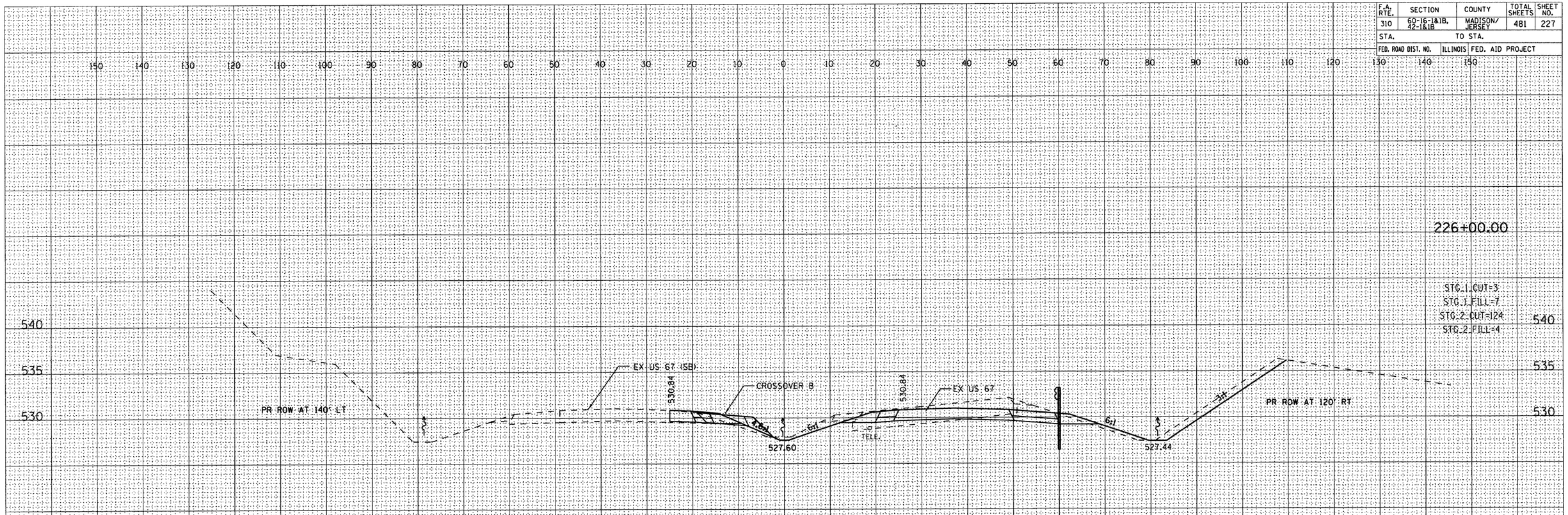

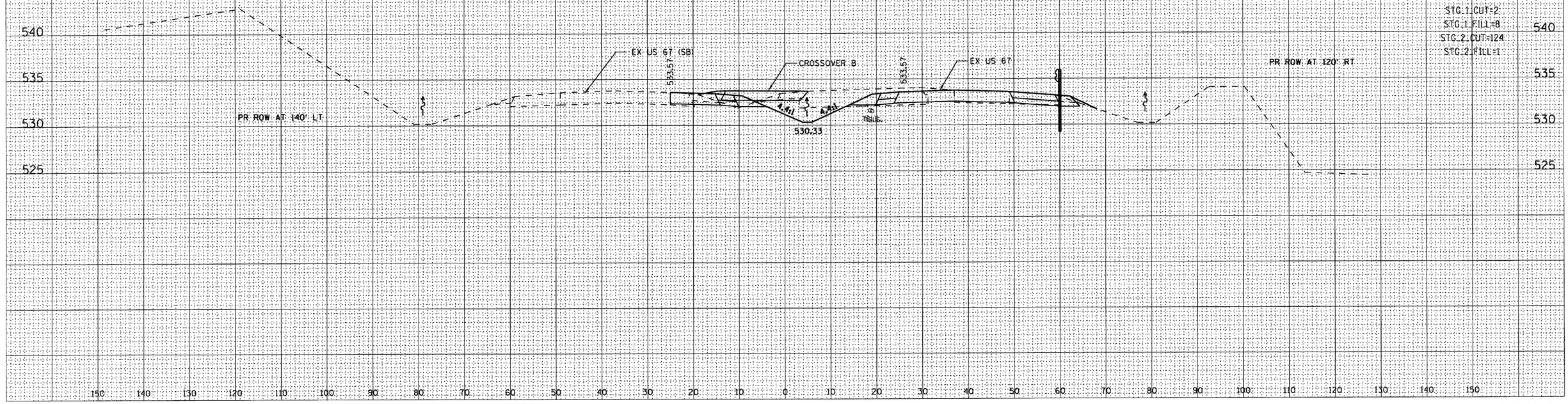

FINAL SURVEY	BY	DATE
SURVEYED		
PLOTTED		
TEMPLATE		
AREAS		
AREAS CHECKED		
NOTE BOOK NO.		

ORIGINAL SURVEY	BY	DATE
SURVEYED		
PLOTTED		
TEMPLATE		
AREAS		
AREAS CHECKED		
NOTE BOOK NO.		

F.A. RTE.	SECTION	COUNTY	TOTAL SHEETS	SHEET NO.
310	60-16-1&1B, 42-1&1B	MADISON/ JERSEY	481	228
STA.		TO STA.		
FED. ROAD DIST. NO.	ILLINOIS	FED. AID PROJECT		

FINAL SURVEY	BY	DATE
SURVEYED		
PLOTTED		
TEMPLATE		
AREAS		
AREAS CHECKED		
NOTE BOOK		
NO.		

ORIGINAL SURVEY	BY	DATE
SURVEYED		
PLOTTED		
TEMPLATE		
AREAS		
AREAS CHECKED		
NOTE BOOK		
NO.		

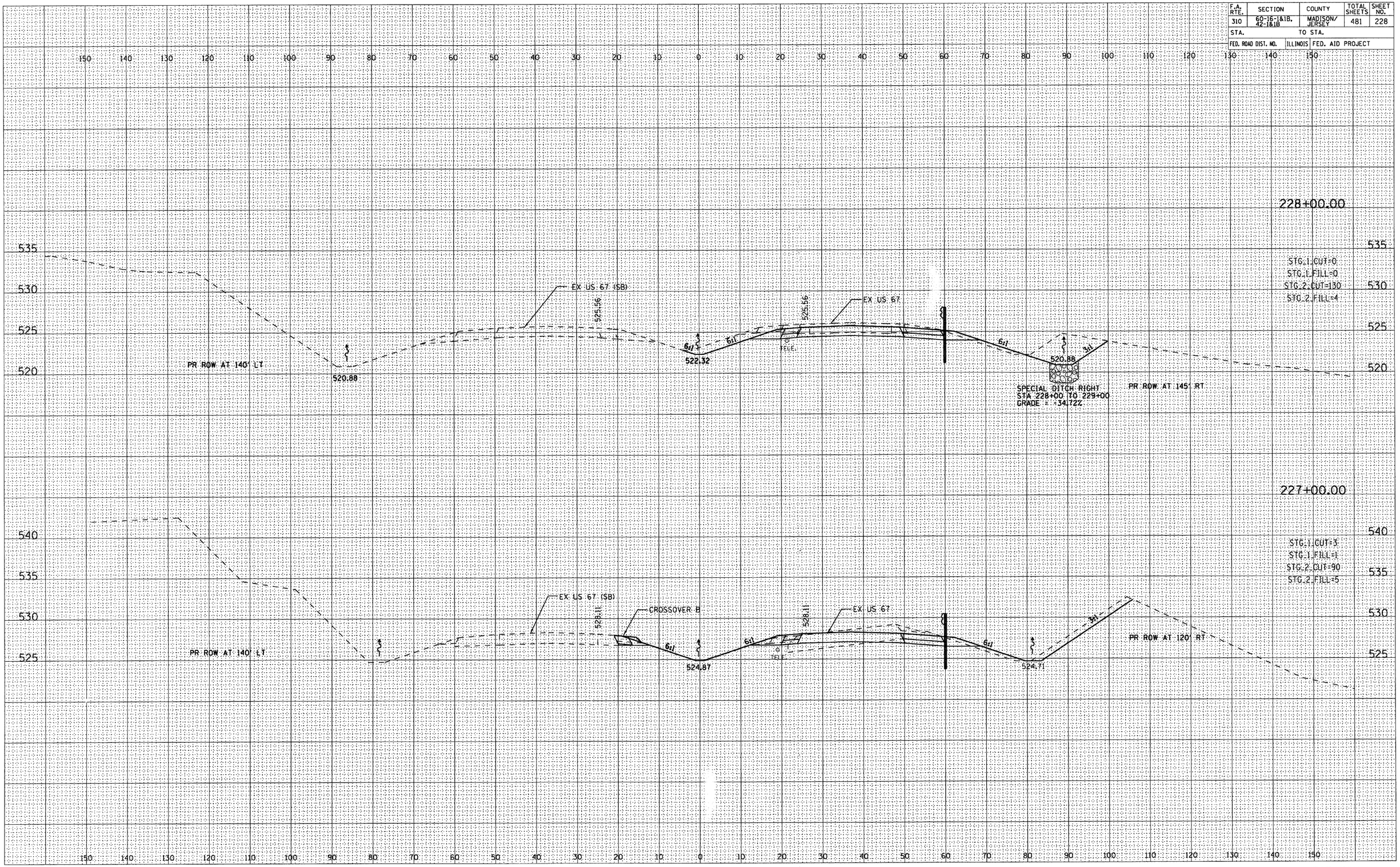

F.A. RTE.	SECTION	COUNTY	TOTAL SHEETS	SHEET NO.
310	60-16-I&IB, 42-I&IB	MADISON/ JERSEY	481	229
STA.		TO STA.		
FED. ROAD DIST. NO.	ILLINOIS	FED. AID PROJECT		

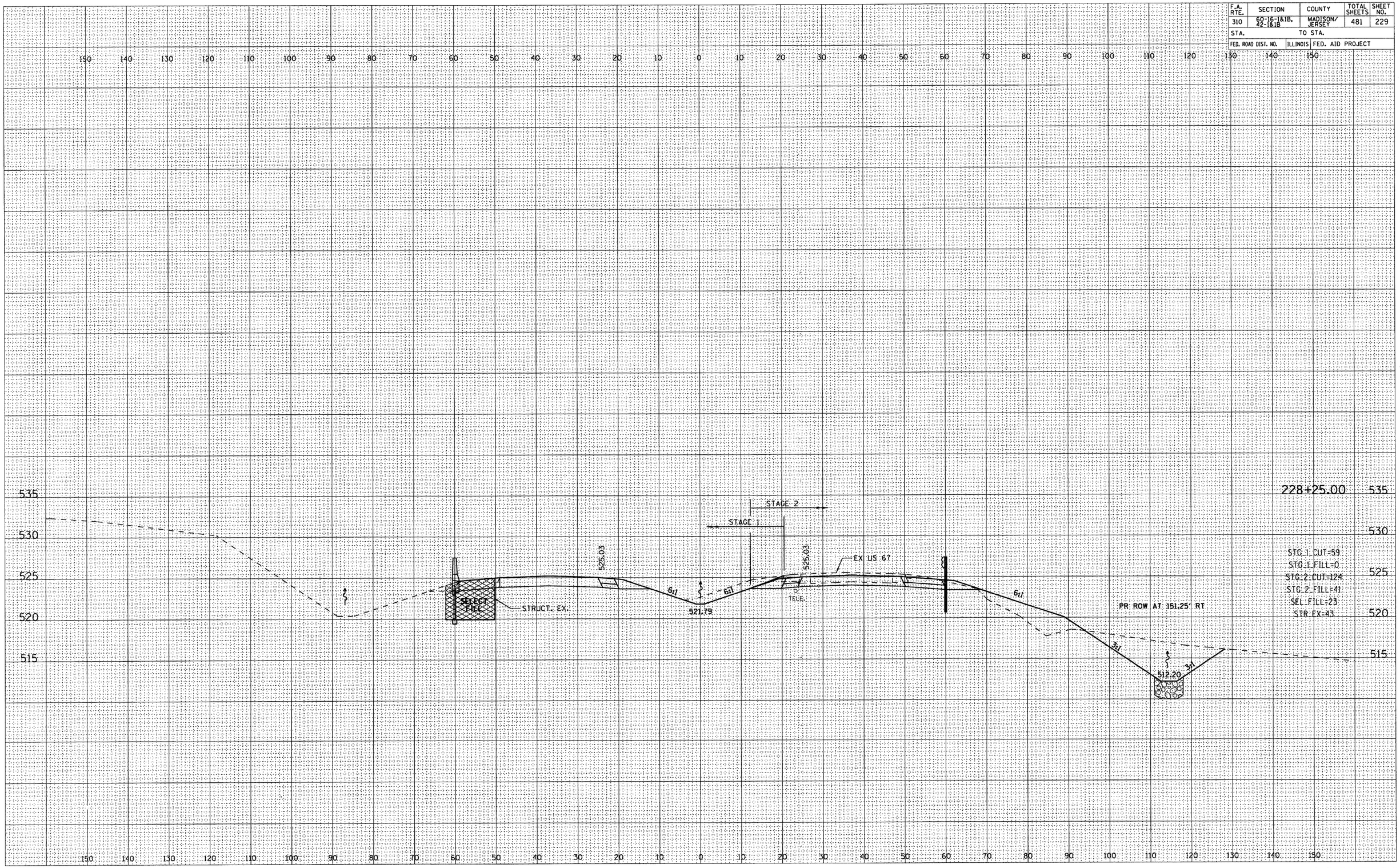

FINAL SURVEY		BY	DATE
NOTE BOOK NO.	SURVEYED		
	PLOTTED		
	TEMPLATE		
	AREAS		
	AREAS CHECKED		

ORIGINAL SURVEY		BY	DATE
NOTE BOOK NO.	SURVEYED		
	PLOTTED		
	TEMPLATE		
	AREAS		
	AREAS CHECKED		

F.A. RTE.	SECTION	COUNTY	TOTAL SHEETS	SHEET NO.
310	60-16-1&1B, 42-1&1B	MADISON/ JERSEY	481	230
STA.		TO STA.		
FED. ROAD DIST. NO.	ILLINOIS	FED. AID PROJECT		

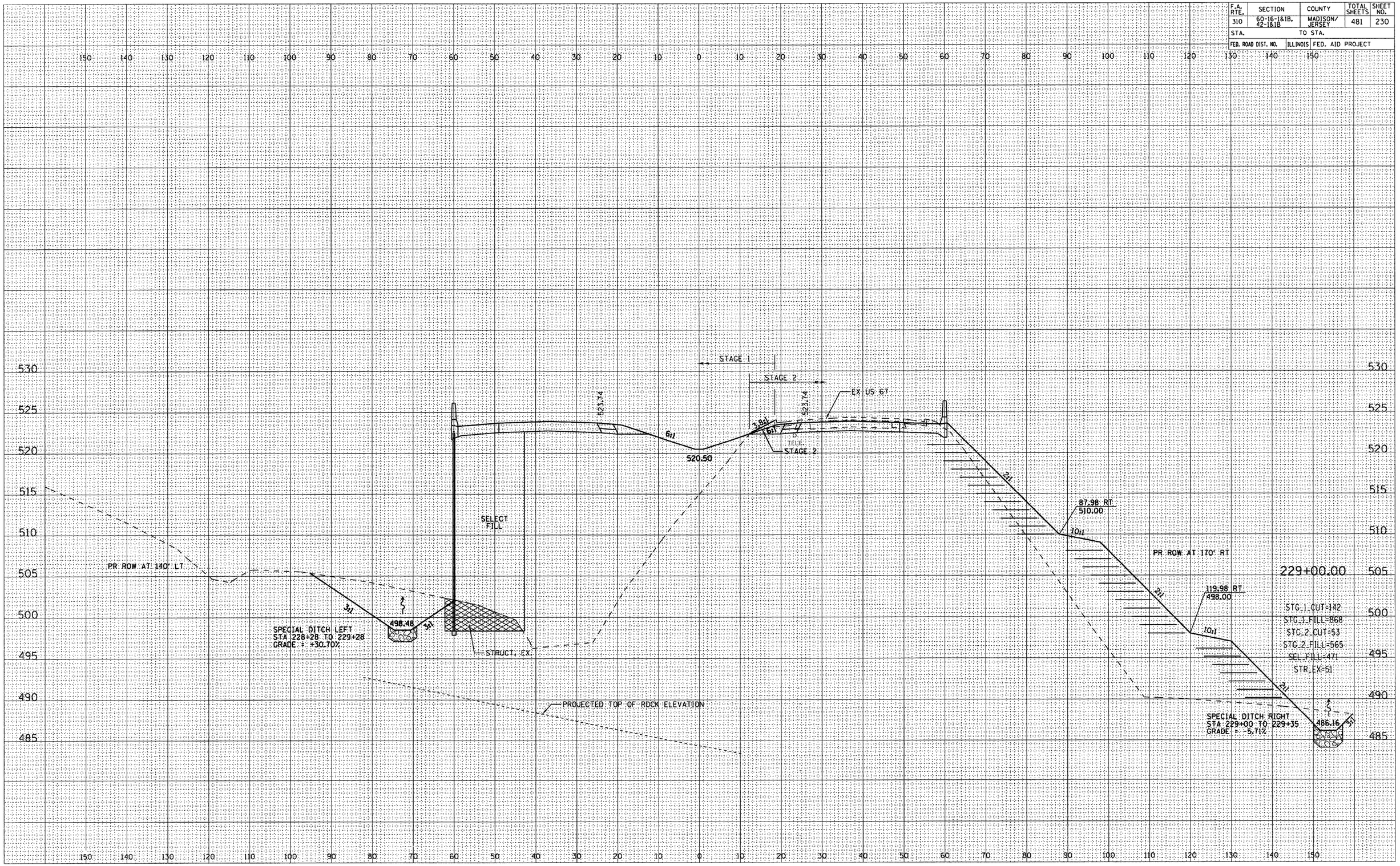

FINAL SURVEY	BY	DATE
SURVEYED		
PLOTTED		
TEMPLATE		
AREAS		
AREAS CHECKED		
NOTE BOOK NO.		

ORIGINAL SURVEY	BY	DATE
SURVEYED		
PLOTTED		
TEMPLATE		
AREAS		
AREAS CHECKED		
NOTE BOOK NO.		

F.A. RTE.	SECTION	COUNTY	TOTAL SHEETS	SHEET NO.
310	60-16-1&1B, 42-1&1B	MADISON/ JERSEY	481	231
STA.		TO STA.		
FED. ROAD DIST. NO.	ILLINOIS	FED. AID PROJECT		

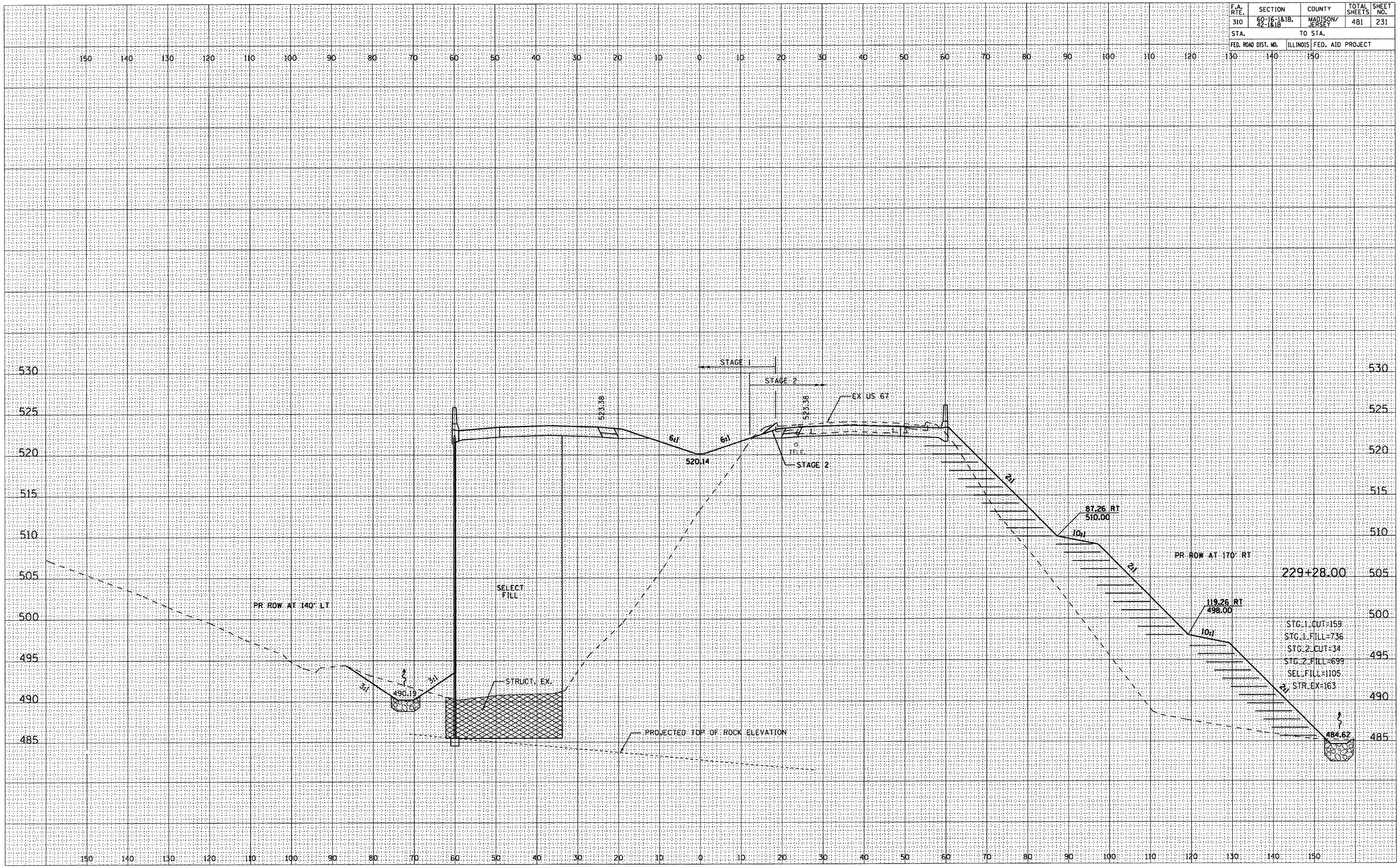

FINAL SURVEY		BY	DATE
NOTE BOOK	SURVEYED		
	PLOTTED		
	TEMPLATE		
	AREAS		
NO.	AREAS CHECKED		

ORIGINAL SURVEY		BY	DATE
NOTE BOOK	SURVEYED		
	PLOTTED		
	TEMPLATE		
	AREAS		
NO.	AREAS CHECKED		

F.A. RTE.	SECTION	COUNTY	TOTAL SHEETS	SHEET NO.
310	60-16-1&1B. 42-1&1B	MADISON/ JERSEY	481	232
STA.		TO STA.		
FED. ROAD DIST. NO.		ILLINOIS	FED. AID PROJECT	

FINAL SURVEY	BY	DATE
SURVEYED		
PLOTTED		
TEMPLATE		
AREAS		
AREAS CHECKED		
NOTE BOOK NO.		

ORIGINAL SURVEY	BY	DATE
SURVEYED		
PLOTTED		
TEMPLATE		
AREAS		
AREAS CHECKED		
NOTE BOOK NO.		

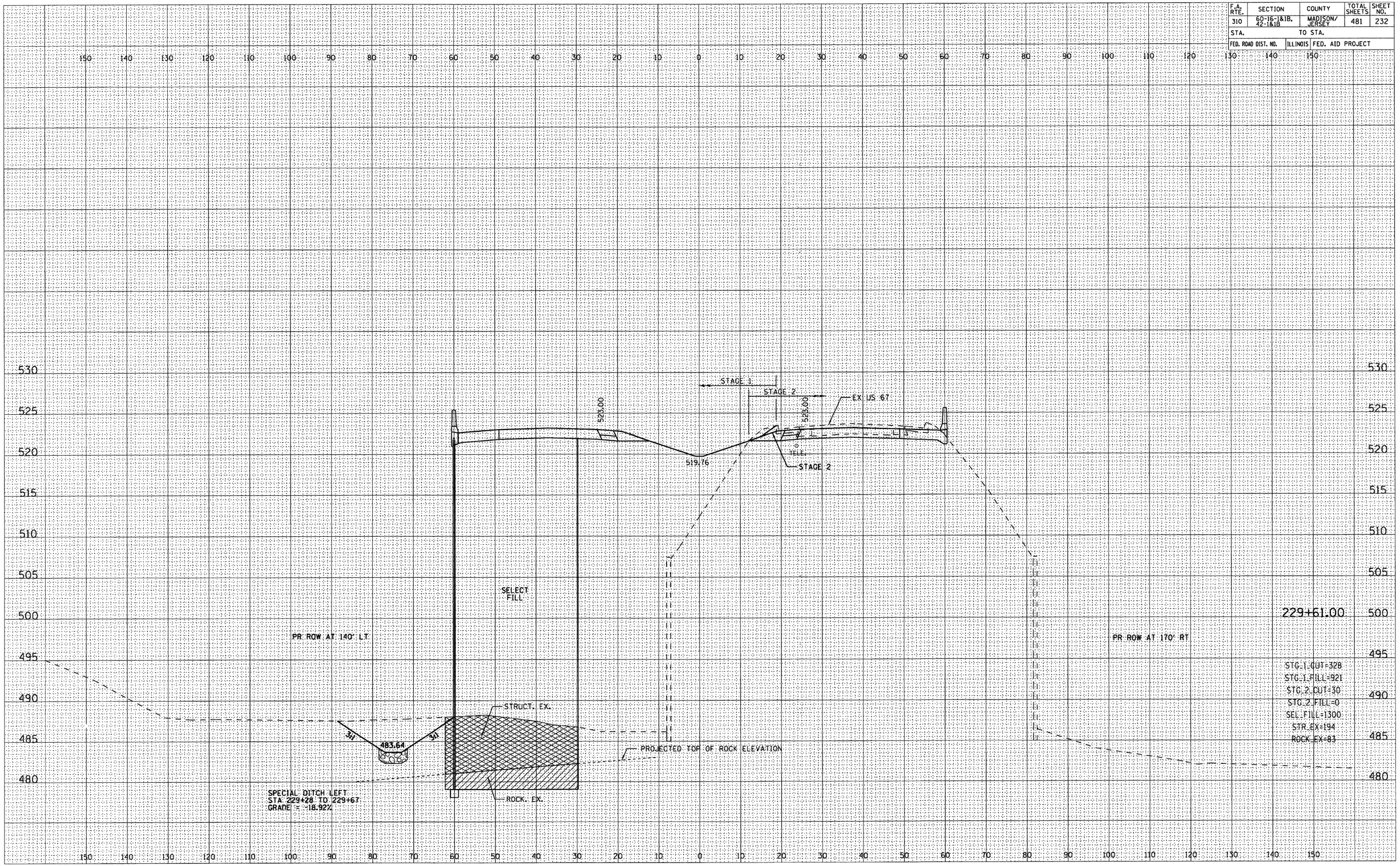

FAP ROUTE 310

F.A. RTE.	SECTION	COUNTY	TOTAL SHEETS	SHEET NO.
310	60-16-1&1B, 42-1&1B	MADISON/ JERSEY	481	233
STA.		TO STA.		
FED. ROAD DIST. NO.		ILLINOIS	FED. AID PROJECT	

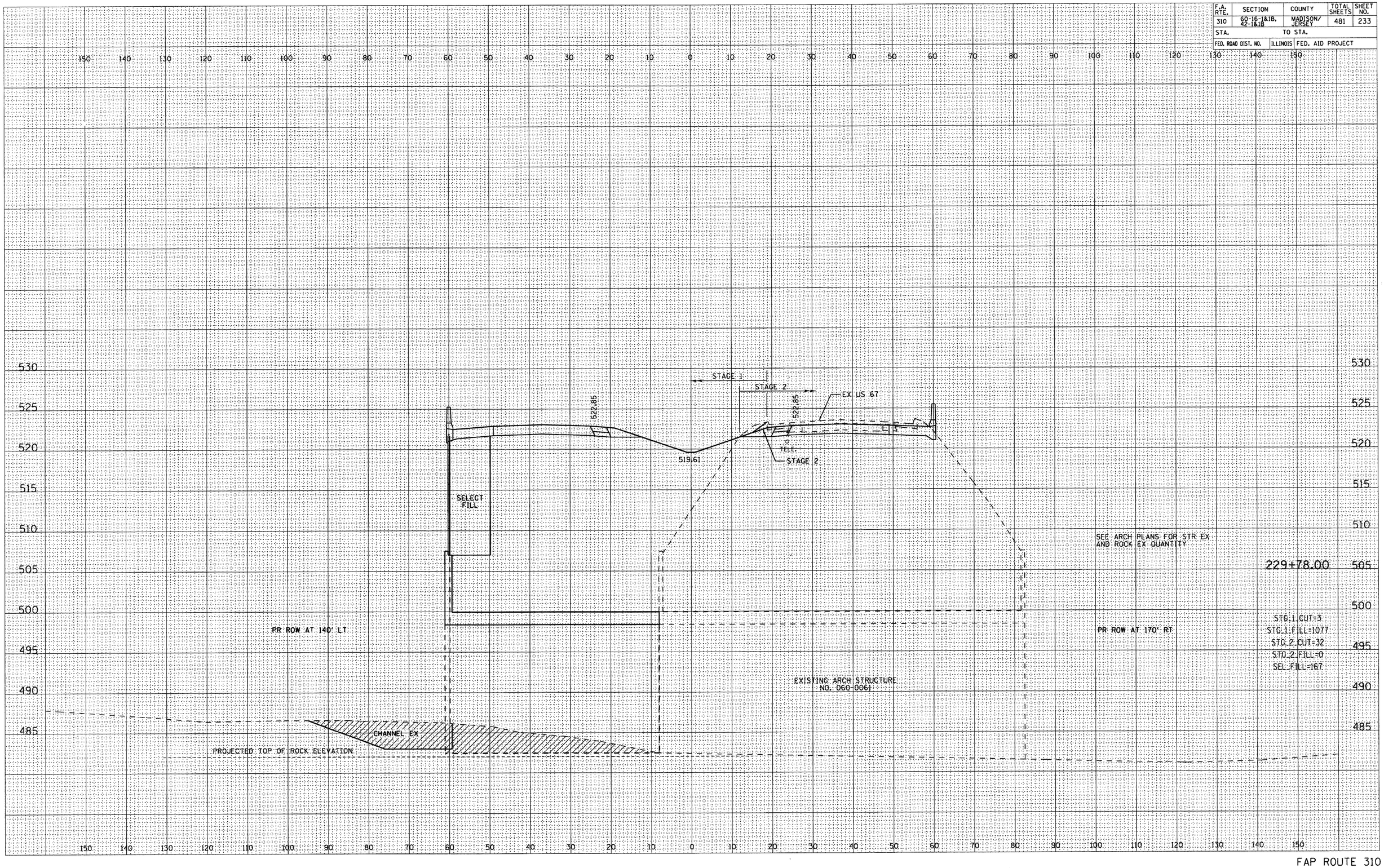

FINAL SURVEY	BY	DATE
SURVEYED		
PLOTTED		
TEMPLATE		
AREAS		
AREAS CHECKED		
NOTE BOOK NO.		

ORIGINAL SURVEY	BY	DATE
SURVEYED		
PLOTTED		
TEMPLATE		
AREAS		
AREAS CHECKED		
NOTE BOOK NO.		

F.A. RTE.	SECTION	COUNTY	TOTAL SHEETS	SHEET NO.
310	60-16-1&1B, 42-1&1B	MADISON/ JERSEY	481	234
STA.		TO STA.		
FED. ROAD DIST. NO.	ILLINOIS	FED. AID PROJECT		

FINAL SURVEY	BY	DATE
SURVEYED		
PLOTTED		
TEMPLATE		
AREAS		
AREAS CHECKED		
NOTE BOOK NO.		

ORIGINAL SURVEY	BY	DATE
SURVEYED		
PLOTTED		
TEMPLATE		
AREAS		
AREAS CHECKED		
NOTE BOOK NO.		

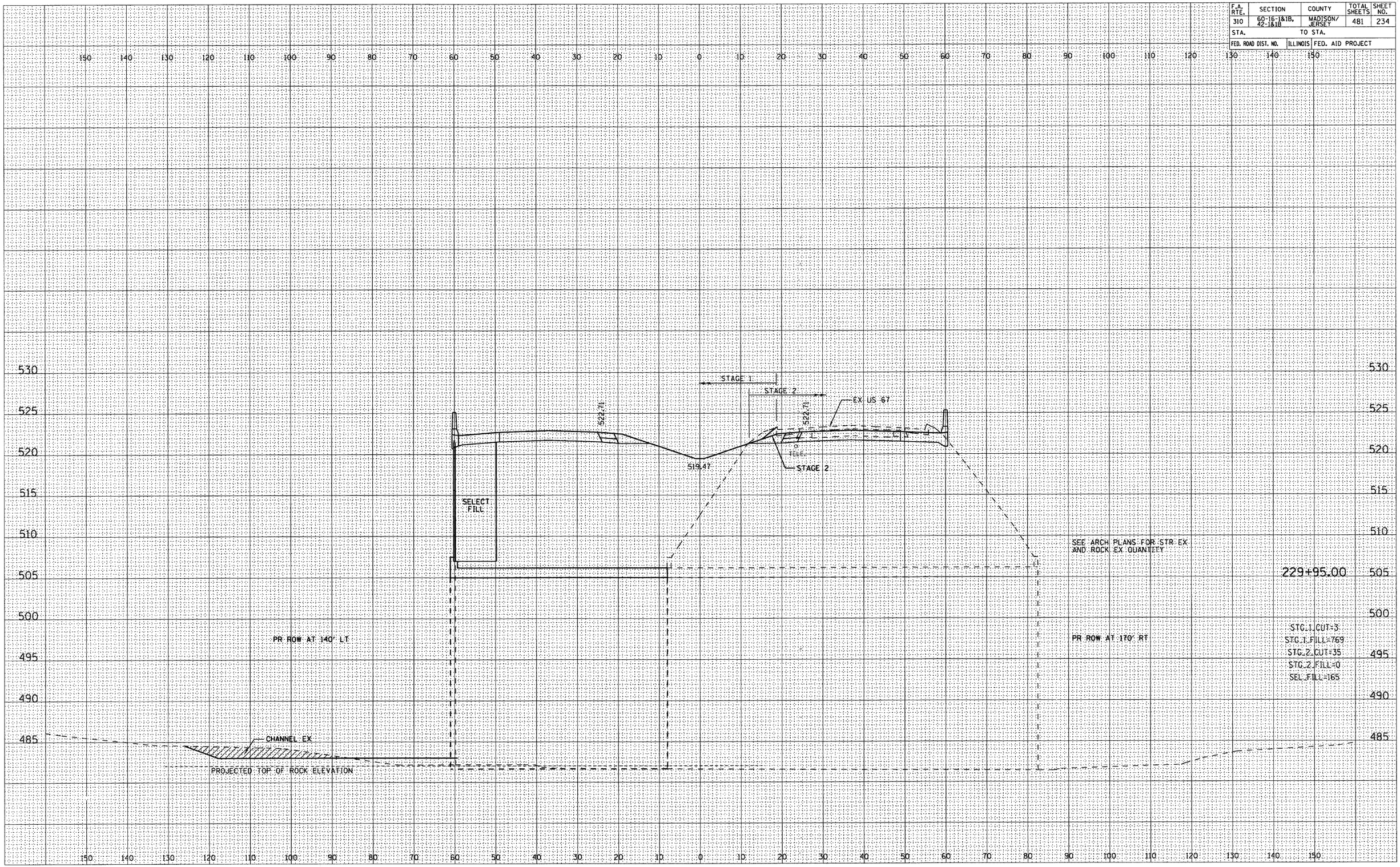

F.A. RTE.	SECTION	COUNTY	TOTAL SHEETS	SHEET NO.
310	60-16-1&1B, 42-1&1B	MADISON/ JERSEY	481	235
STA.		TO STA.		
FED. ROAD DIST. NO.	ILLINOIS	FED. AID PROJECT		

FINAL SURVEY	BY	DATE
NOTE BOOK	SURVEYED	
	PLOTTED	
	TEMPLATE	
	AREAS	
NO.	AREAS CHECKED	

ORIGINAL SURVEY	BY	DATE
NOTE BOOK	SURVEYED	
	PLOTTED	
	TEMPLATE	
	AREAS	
NO.	AREAS CHECKED	

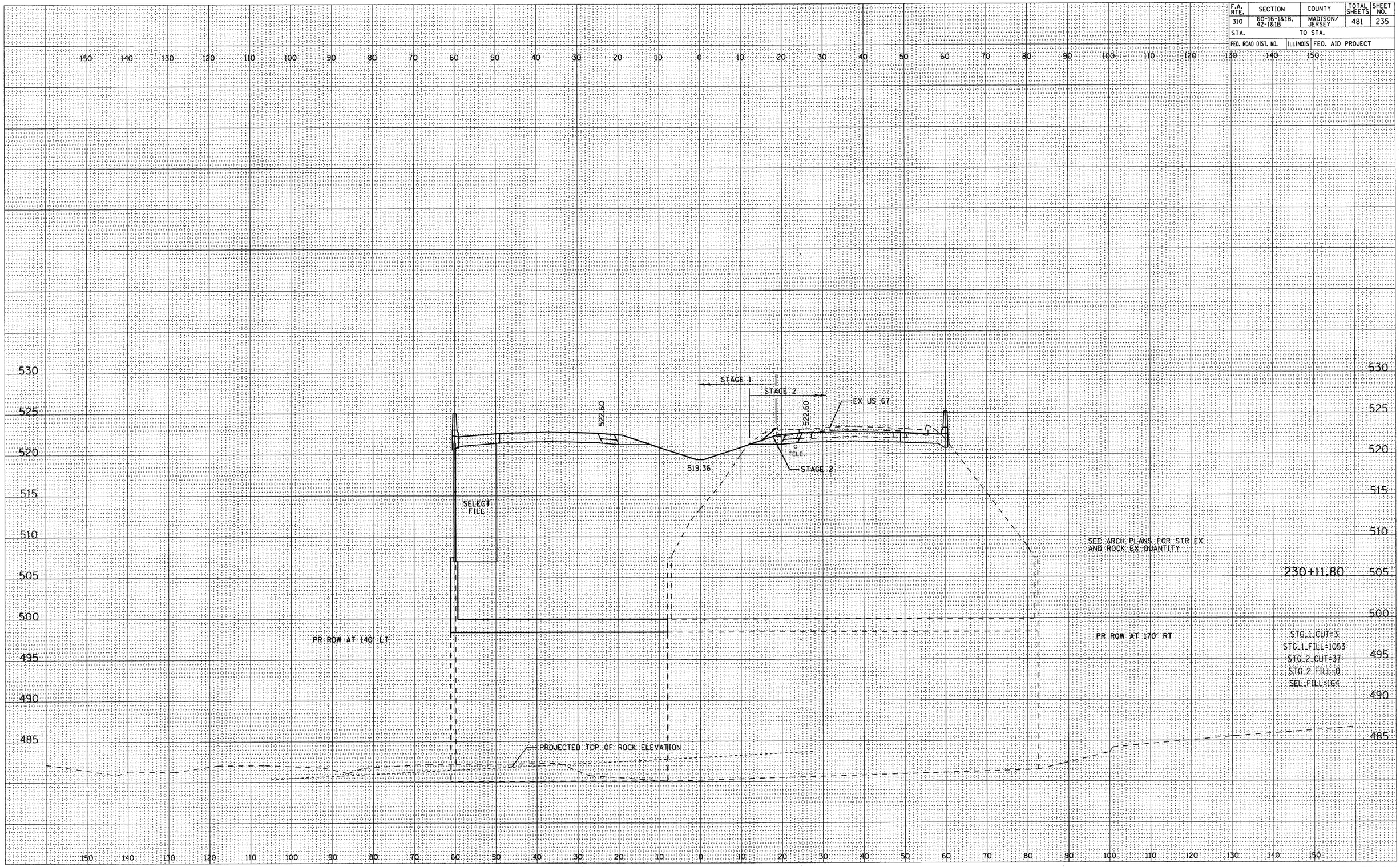

FAP ROUTE 310

F.A. RTE.	SECTION	COUNTY	TOTAL SHEETS	SHEET NO.
310	60-16-1&1B, 42-1&1B	MADISON/ JERSEY	481	236
STA.		TO STA.		
FED. ROAD DIST. NO.	ILLINOIS	FED. AID PROJECT		

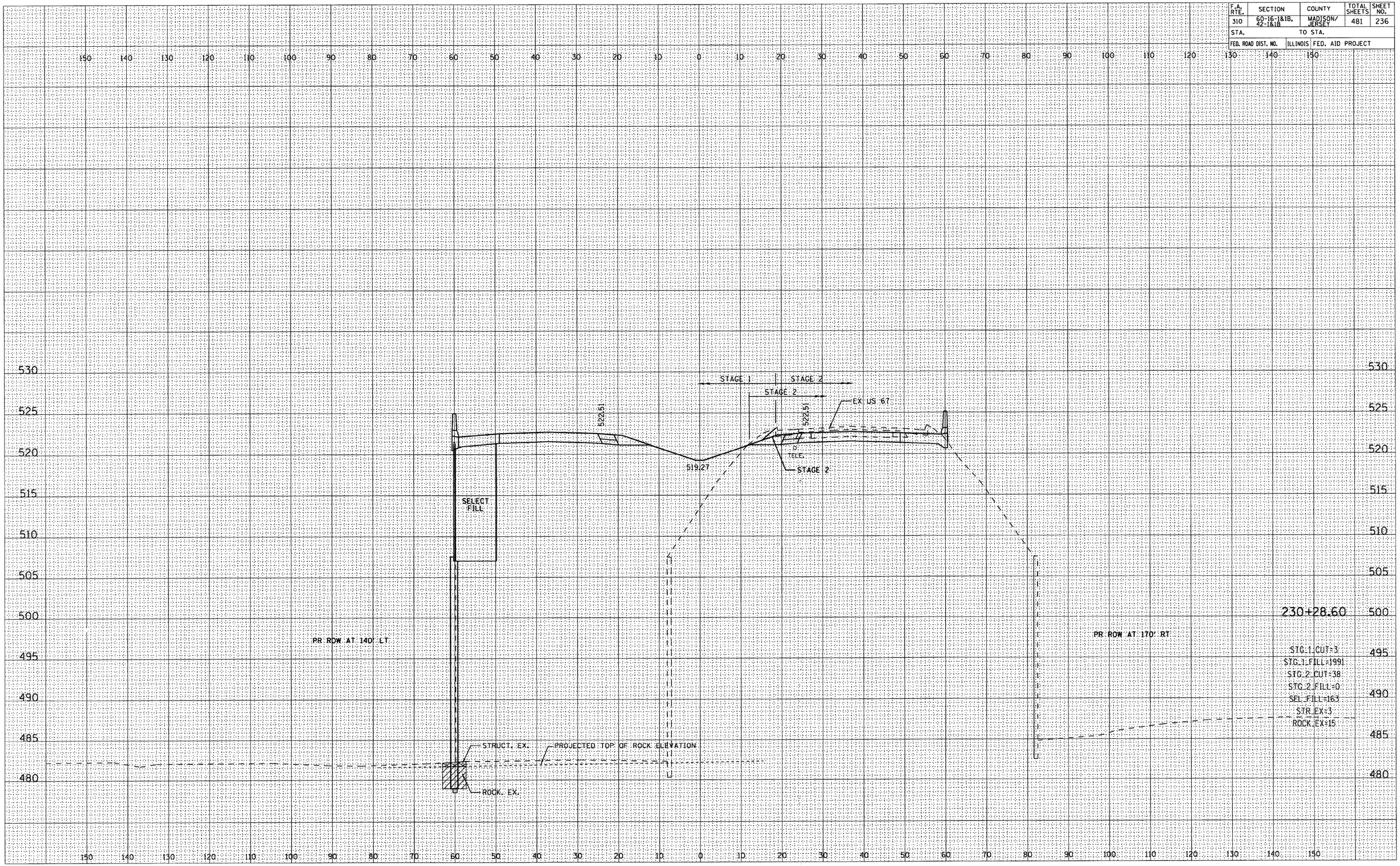

FINAL SURVEY	BY	DATE
SURVEYED		
PLOTTED		
TEMPLATE		
AREAS		
AREAS CHECKED		
NOTE BOOK NO.		

ORIGINAL SURVEY	BY	DATE
SURVEYED		
PLOTTED		
TEMPLATE		
AREAS		
AREAS CHECKED		
NOTE BOOK NO.		

F.A. RTE.	SECTION	COUNTY	TOTAL SHEETS	SHEET NO.
310	60-16-1&1B, 42-1&1B	MADISON/ JERSEY	481	237
STA.		TO STA.		
FED. ROAD DIST. NO.	ILLINOIS	FED. AID PROJECT		

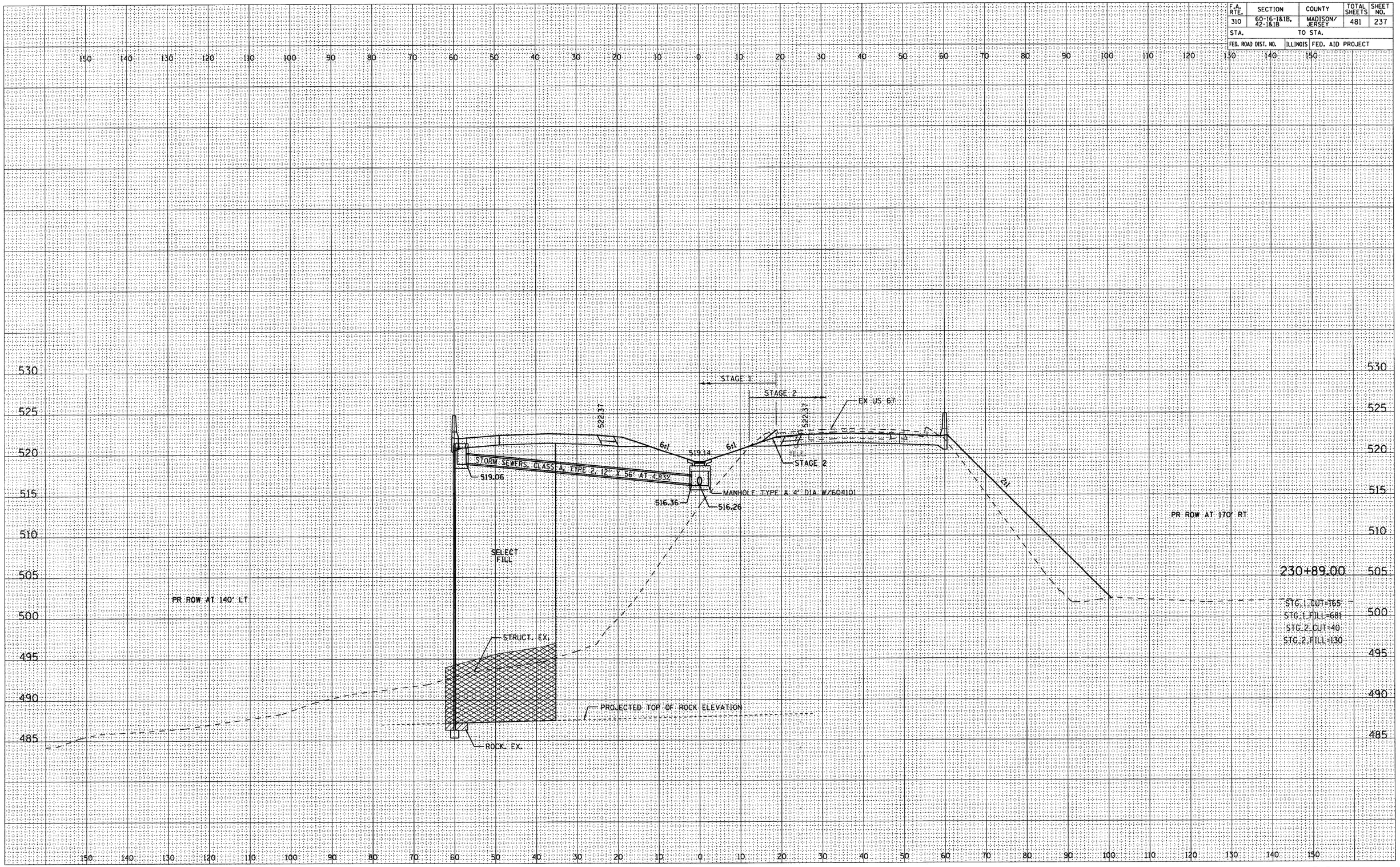

FINAL SURVEY		BY	DATE
NOTE BOOK NO.	SURVEYED		
	PLOTTED		
	TEMPLATE		
	AREAS		
	AREAS CHECKED		

ORIGINAL SURVEY		BY	DATE
NOTE BOOK NO.	SURVEYED		
	PLOTTED		
	TEMPLATE		
	AREAS		
	AREAS CHECKED		

F.A. RTE.	SECTION	COUNTY	TOTAL SHEETS	SHEET NO.
310	60-16-1&1B, 42-1&1B	MADISON/ JERSEY	481	238
STA.		TO STA.		
FED. ROAD DIST. NO.	ILLINOIS	FED. AID PROJECT		

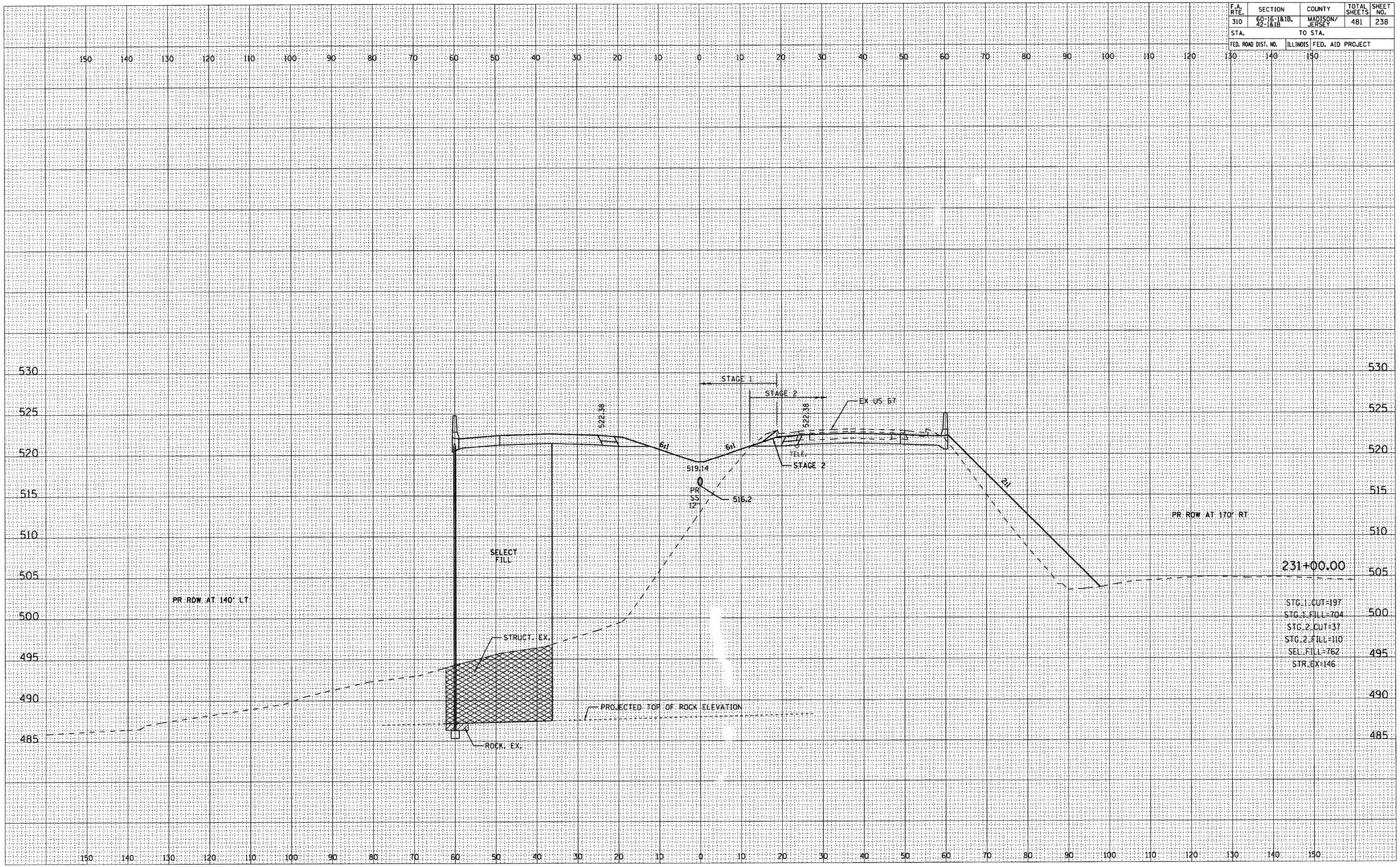

FINAL SURVEY		BY	DATE
NOTE BOOK NO.	SURVEYED		
	PLOTTED		
	TEMPLATE		
	AREAS		
	AREAS CHECKED		

ORIGINAL SURVEY		BY	DATE
NOTE BOOK NO.	SURVEYED		
	PLOTTED		
	TEMPLATE		
	AREAS		
	AREAS CHECKED		

F.A. RTE.	SECTION	COUNTY	TOTAL SHEETS	SHEET NO.
310	60-16-1&1B, 42-1&1B	MADISON/ JERSEY	481	239
STA.		TO STA.		
FED. ROAD DIST. NO.	ILLINOIS	FED. AID PROJECT		

FINAL SURVEY	BY	DATE
SURVEYED		
PLOTTED		
TEMPLATE		
AREAS		
AREAS CHECKED		
NOTE BOOK NO.		

ORIGINAL SURVEY	BY	DATE
SURVEYED		
PLOTTED		
TEMPLATE		
AREAS		
AREAS CHECKED		
NOTE BOOK NO.		

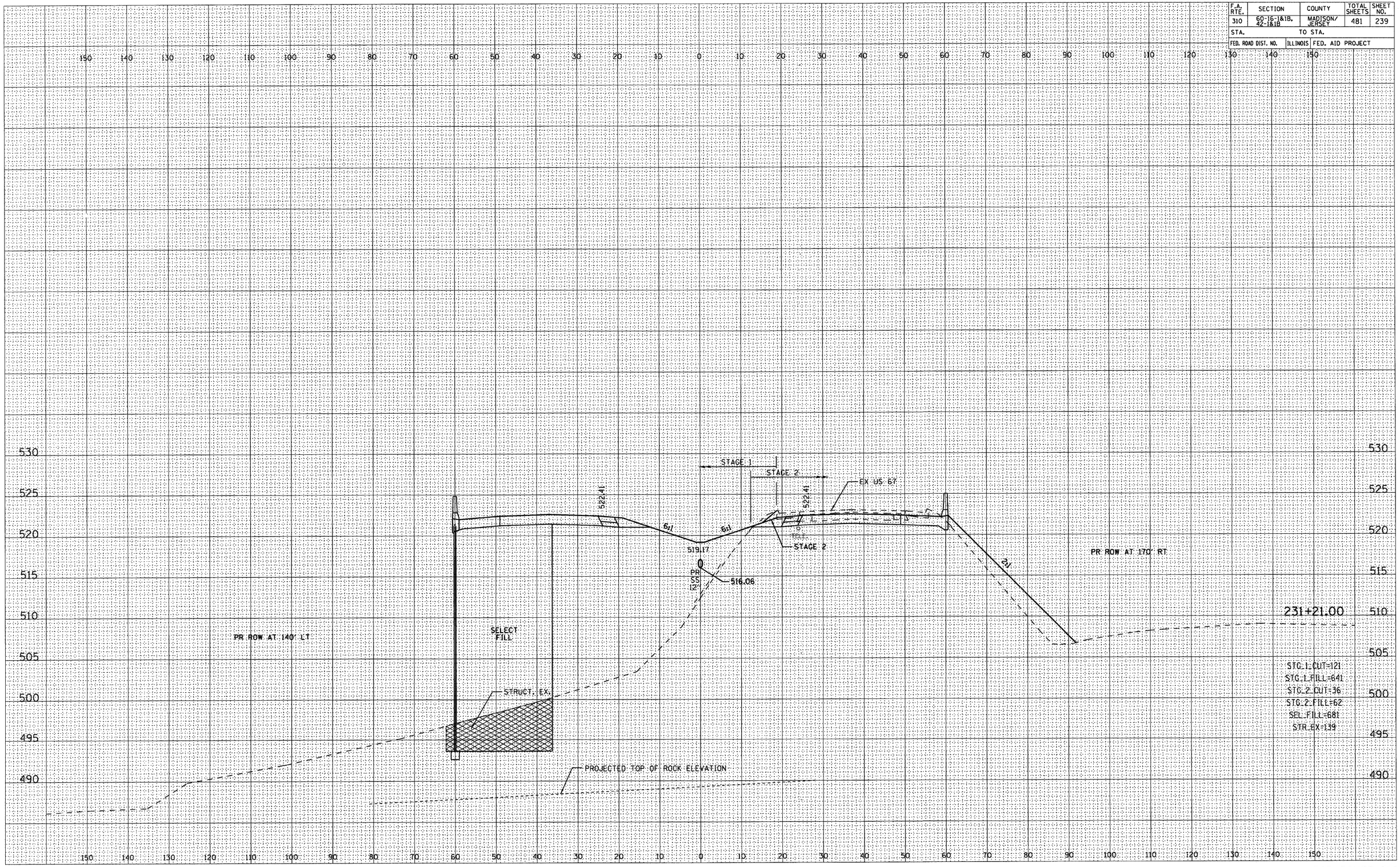

F.A. RTE.	SECTION	COUNTY	TOTAL SHEETS	SHEET NO.
310	60-16-1&1B, 42-1&1B	MADISON/ JERSEY	481	240
STA.	TO STA.			
FED. ROAD DIST. NO.	ILLINOIS	FED. AID PROJECT		

FINAL SURVEY	BY	DATE
SURVEYED		
PLOTTED		
TEMPLATE		
AREAS		
AREAS CHECKED		
NOTE BOOK NO.		

ORIGINAL SURVEY	BY	DATE
SURVEYED		
PLOTTED		
TEMPLATE		
AREAS		
AREAS CHECKED		
NOTE BOOK NO.		

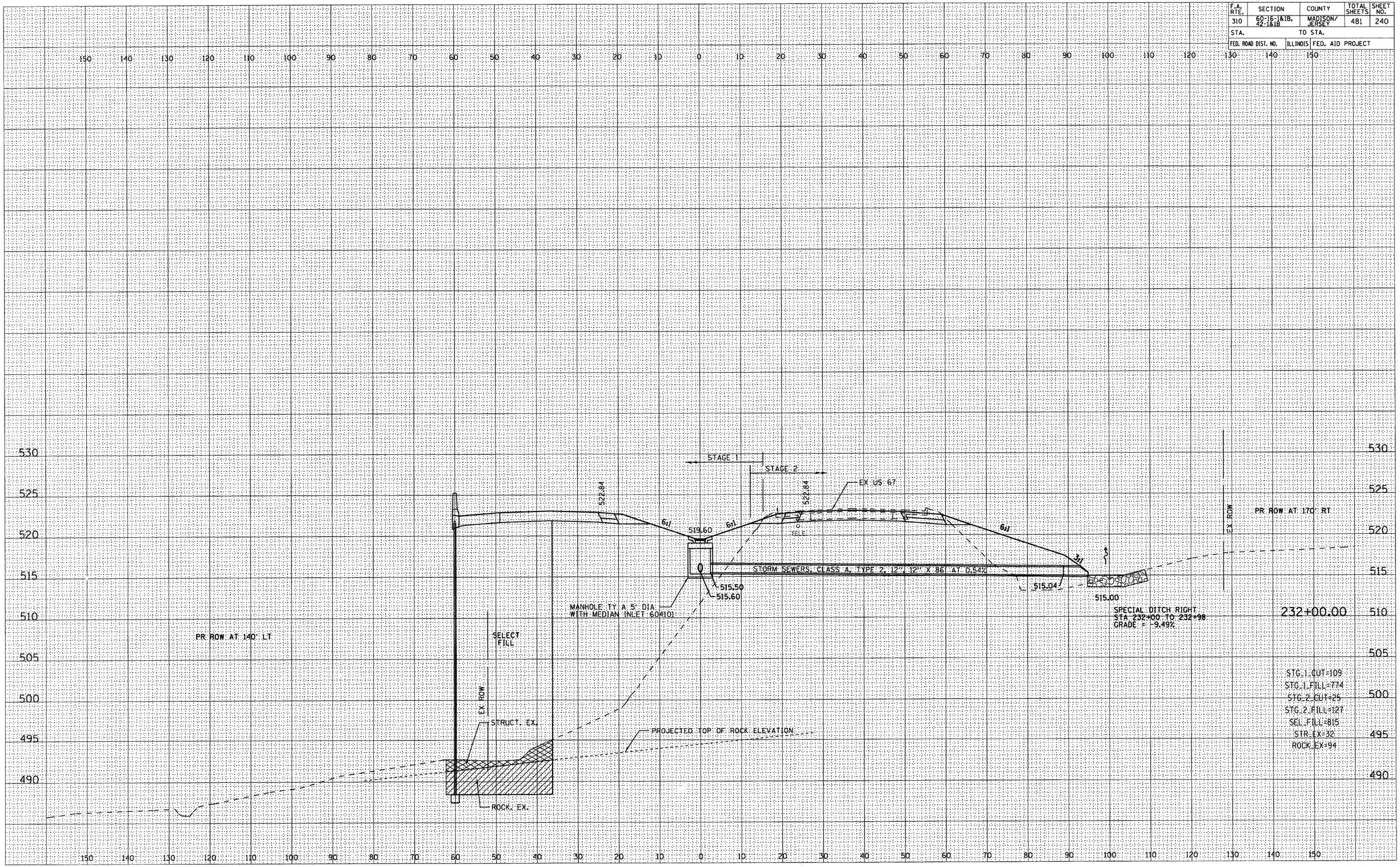

F.A. RTE.	SECTION	COUNTY	TOTAL SHEETS	SHEET NO.
310	60-16-1&1B, 42-1&1B	MADISON/ JERSEY	481	241
STA.		TO STA.		
FED. ROAD DIST. NO.		ILLINOIS	FED. AID PROJECT	

FINAL SURVEY		BY	DATE
NOTE BOOK NO.	SURVEYED		
	PLOTTED		
	TEMPLATE		
	AREAS		
	AREAS CHECKED		

ORIGINAL SURVEY		BY	DATE
NOTE BOOK NO.	SURVEYED		
	PLOTTED		
	TEMPLATE		
	AREAS		
	AREAS CHECKED		

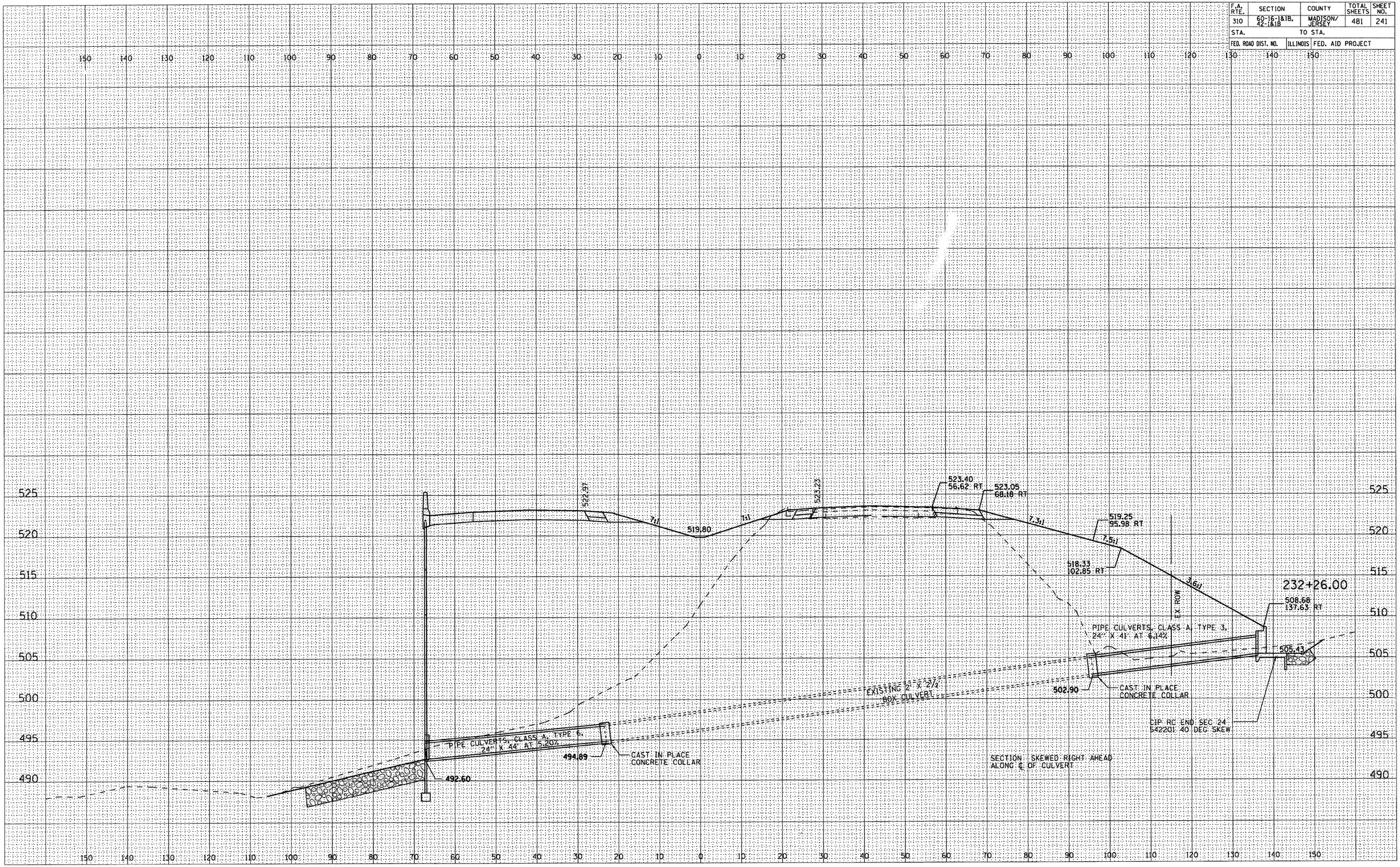

FAP ROUTE 310

F.A. RTE.	SECTION	COUNTY	TOTAL SHEETS	SHEET NO.
310	60-16-1&1B, 42-1&1B	MADISON/ JERSEY	481	242
STA.		TO STA.		
FED. ROAD DIST. NO.	ILLINOIS	FED. AID PROJECT		

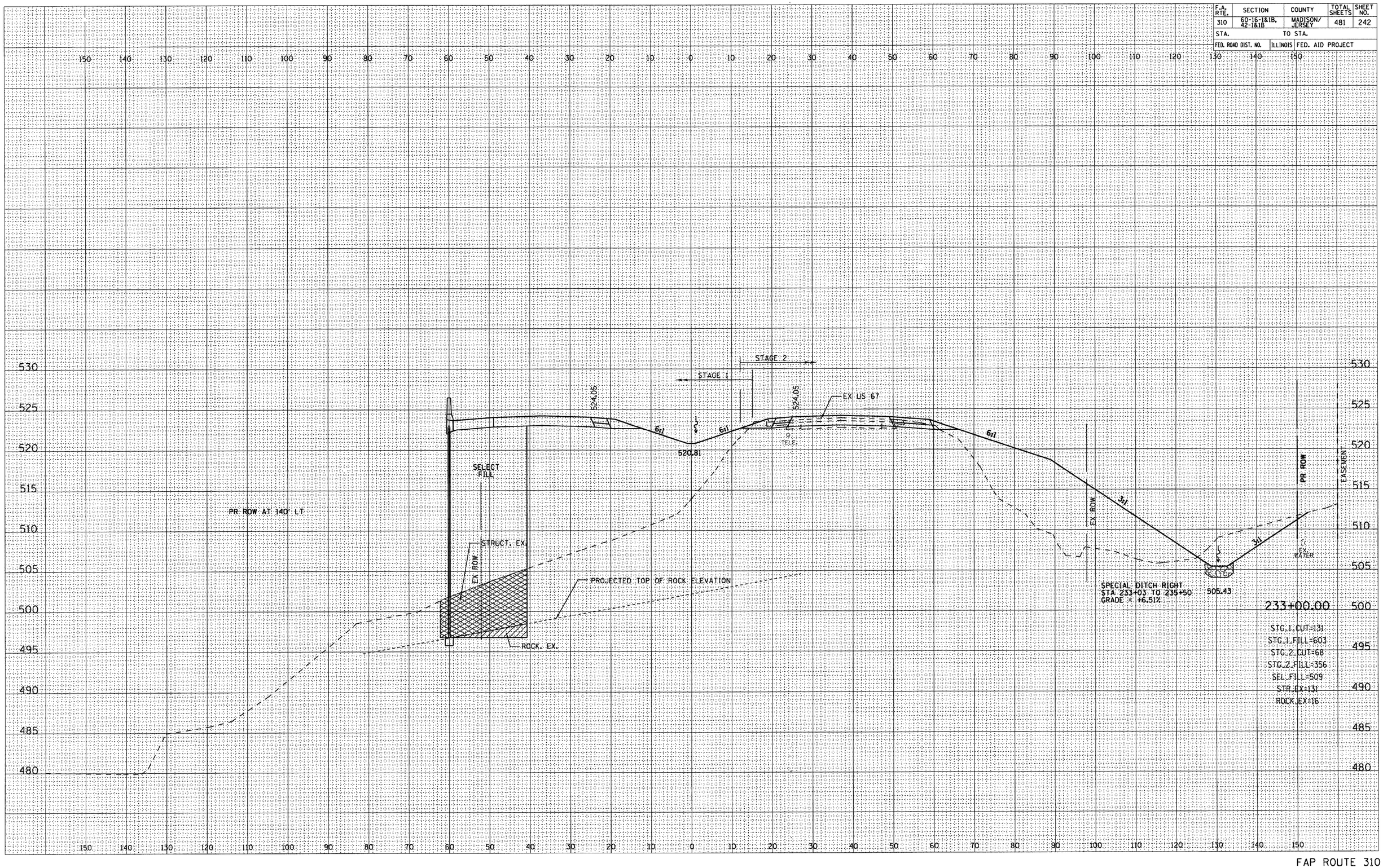

FINAL SURVEY	BY	DATE
SURVEYED		
PLOTTED		
TOPOGRAPHY		
AREAS		
AREAS CHECKED		
NOTE BOOK NO.		

ORIGINAL SURVEY	BY	DATE
SURVEYED		
PLOTTED		
TOPOGRAPHY		
AREAS		
AREAS CHECKED		
NOTE BOOK NO.		

F.A. RTE.	SECTION	COUNTY	TOTAL SHEETS	SHEET NO.
310	60-16-1&1B, 42-1&1B	MADISON/ JERSEY	481	243
STA.		TO STA.		
FED. ROAD DIST. NO.	ILLINOIS	FED. AID PROJECT		

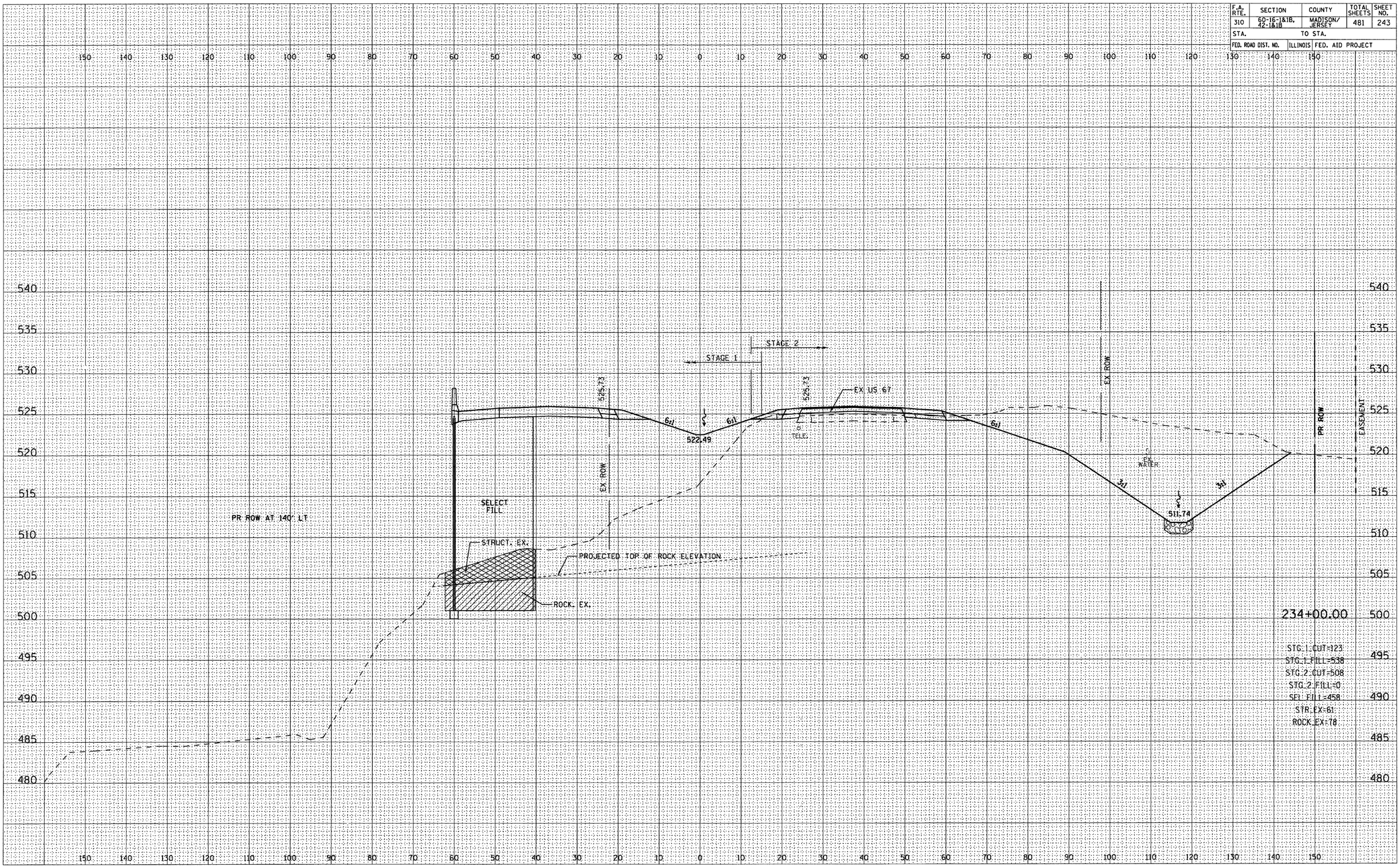

FINAL SURVEY	BY	DATE
SURVEYED		
PLOTTED		
TOPOGRAPHY		
STORM WATER		
AREAS		
AREAS CHECKED		
NOTE BOOK NO.		

ORIGINAL SURVEY	BY	DATE
SURVEYED		
PLOTTED		
TOPOGRAPHY		
STORM WATER		
AREAS		
AREAS CHECKED		
NOTE BOOK NO.		

F.A. RTE.	SECTION	COUNTY	TOTAL SHEETS	SHEET NO.
310	60-16-1&1B, 42-1&1B	MADISON/ JERSEY	481	244
STA.		TO STA.		
FED. ROAD DIST. NO.	ILLINOIS	FED. AID PROJECT		

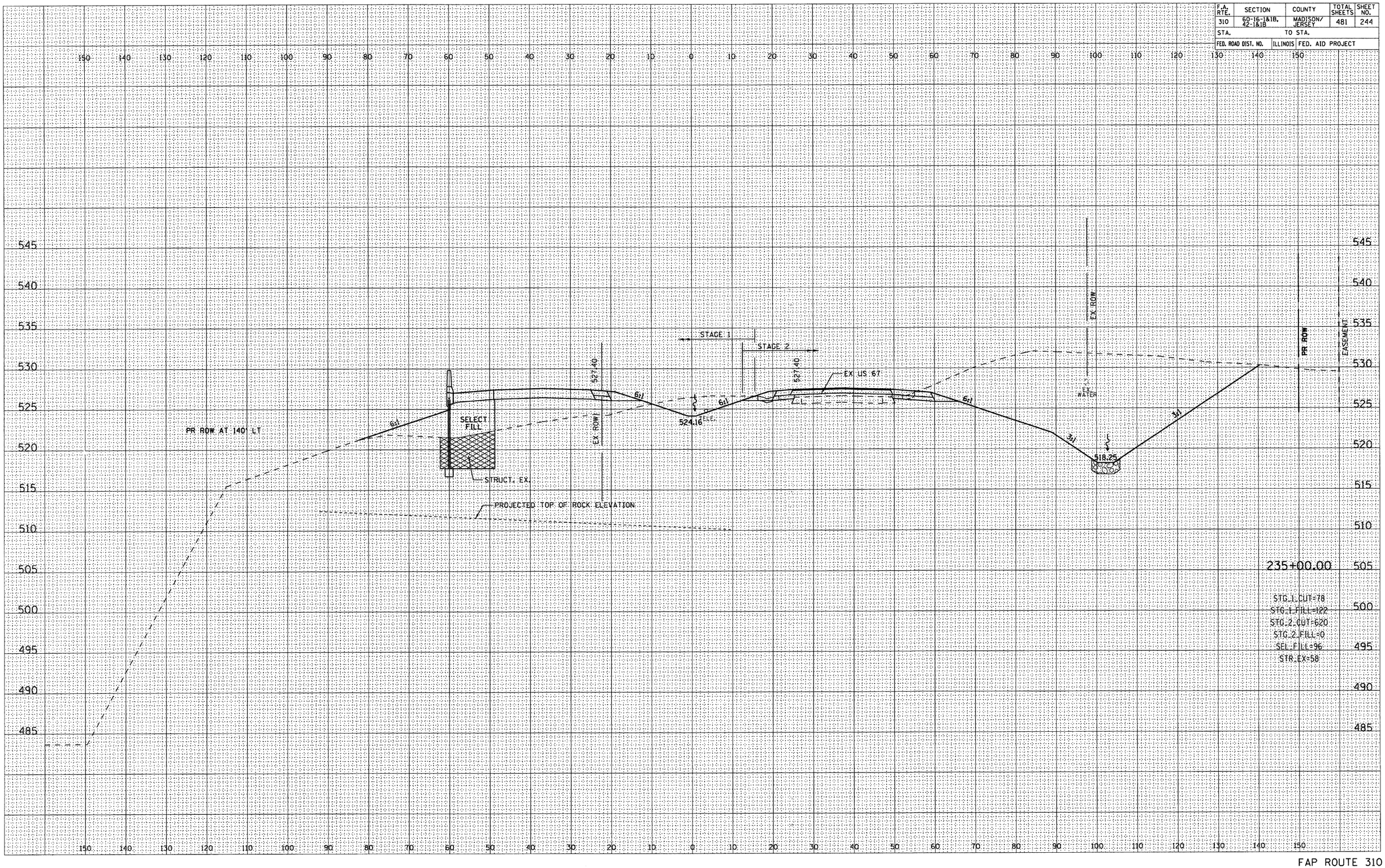

FINAL SURVEY	BY	DATE
SURVEYED		
PLOTTED		
TEMPLATE		
AREAS		
AREAS CHECKED		
NOTE BOOK NO.		

ORIGINAL SURVEY	BY	DATE
SURVEYED		
PLOTTED		
TEMPLATE		
AREAS		
AREAS CHECKED		
NOTE BOOK NO.		

F.A. RTE.	SECTION	COUNTY	TOTAL SHEETS	SHEET NO.
310	60-16-1&1B, 42-1&1B	MADISON/ JERSEY	481	245
STA.		TO STA.		
FED. ROAD DIST. NO.	ILLINOIS	FED. AID PROJECT		

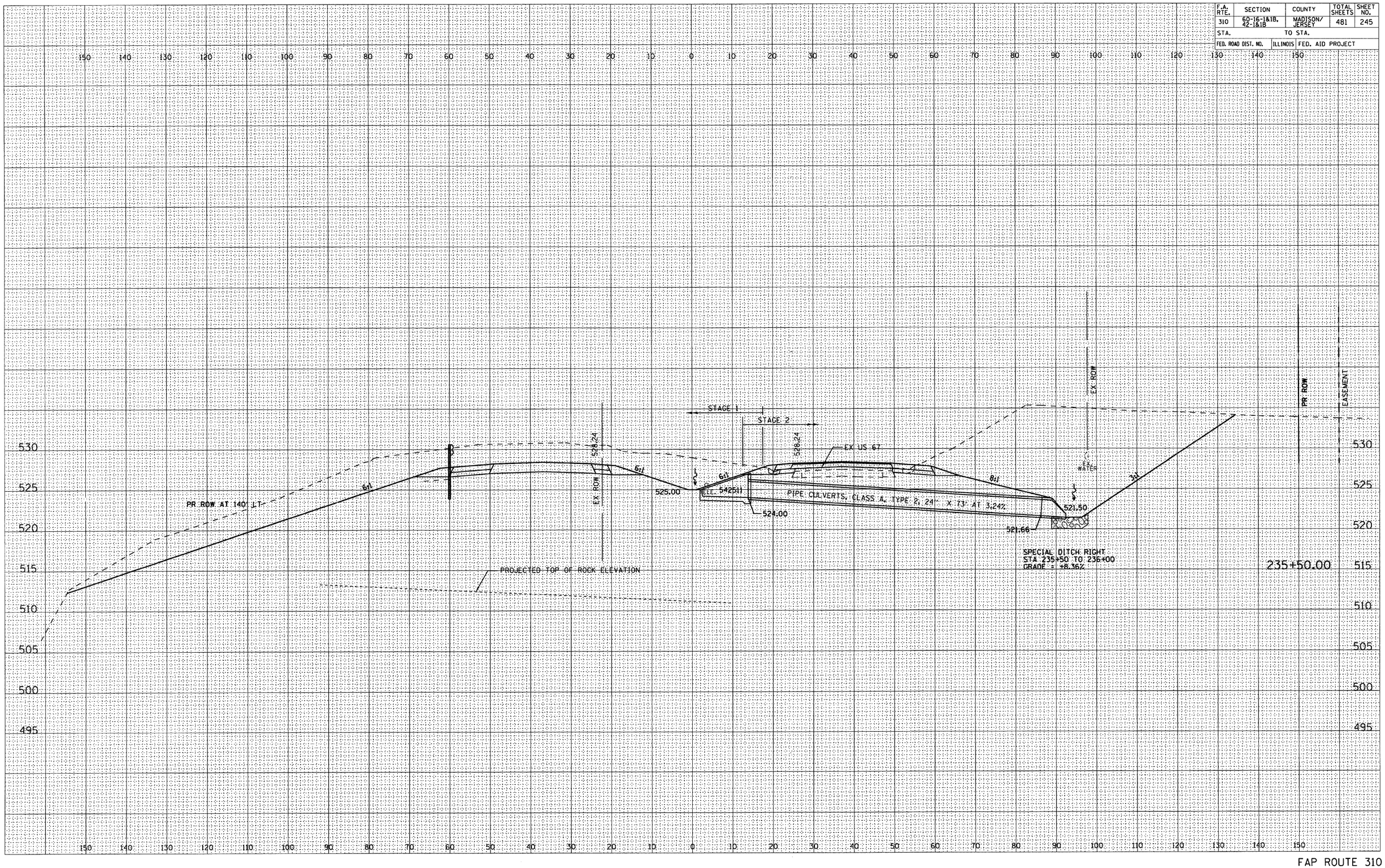

FINAL SURVEY	BY	DATE
NOTE BOOK		
NO.		
SURVEYED		
PLOTTED		
TEMPLATE		
AREAS		
AREAS CHECKED		

ORIGINAL SURVEY	BY	DATE
NOTE BOOK		
NO.		
SURVEYED		
PLOTTED		
TEMPLATE		
AREAS		
AREAS CHECKED		

F.A. RTE.	SECTION	COUNTY	TOTAL SHEETS	SHEET NO.
310	60-16-1&1B, 42-1&1B	MADISON/ JERSEY	481	246
STA.		TO STA.		
FED. ROAD DIST. NO.	ILLINOIS	FED. AID PROJECT		

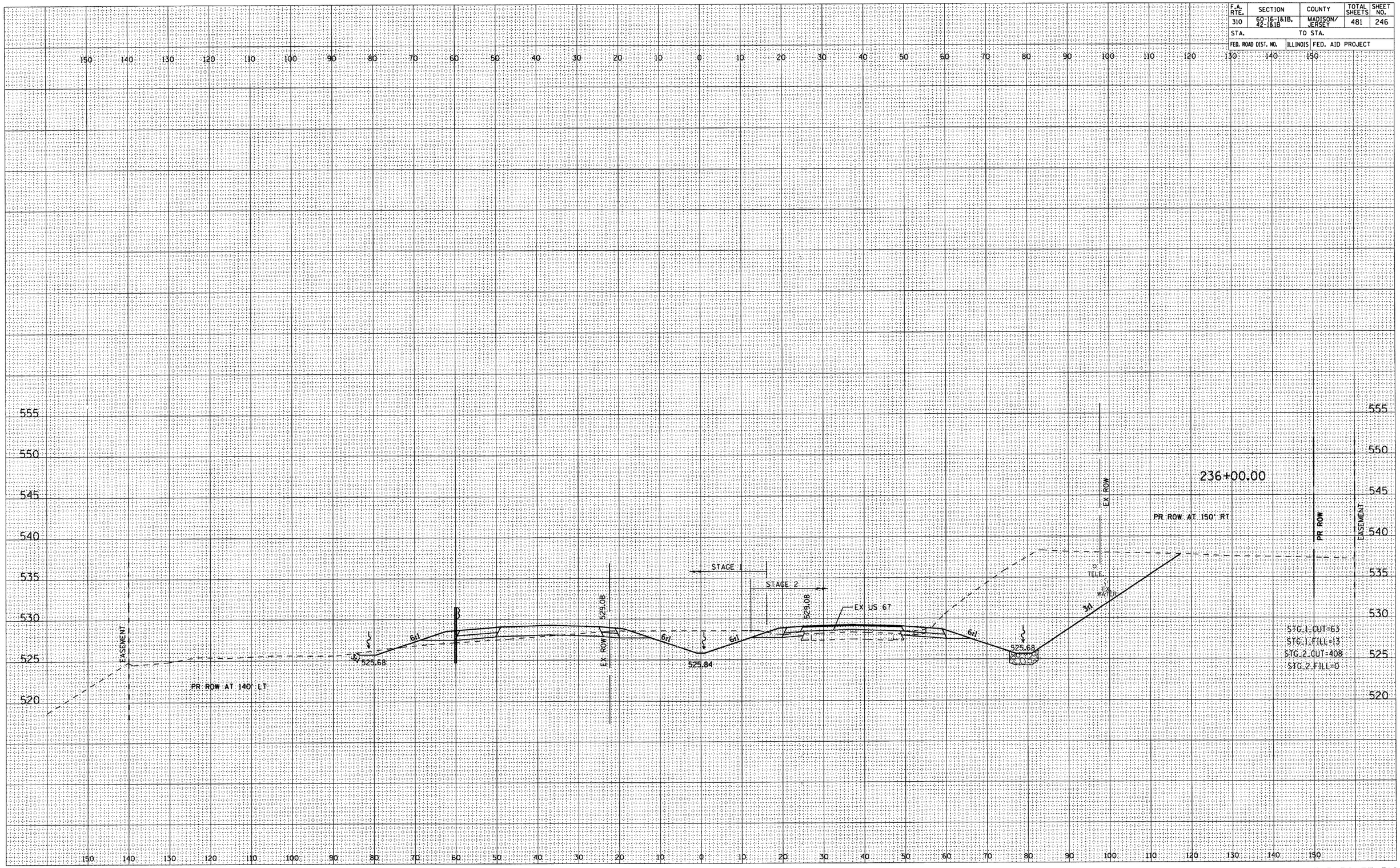

FINAL SURVEY		BY	DATE
NOTE BOOK NO.	SURVEYED		
	PLOTTED		
	TEMPLATE		
	AREAS		
	AREAS CHECKED		

ORIGINAL SURVEY		BY	DATE
NOTE BOOK NO.	SURVEYED		
	PLOTTED		
	TEMPLATE		
	AREAS		
	AREAS CHECKED		

F.A. RTE.	SECTION	COUNTY	TOTAL SHEETS	SHEET NO.
310	60-16-1&1B, 42-1&1B	MADISON/ JERSEY	481	247
STA.		TO STA.		
FED. ROAD DIST. NO.	ILLINOIS	FED. AID PROJECT		

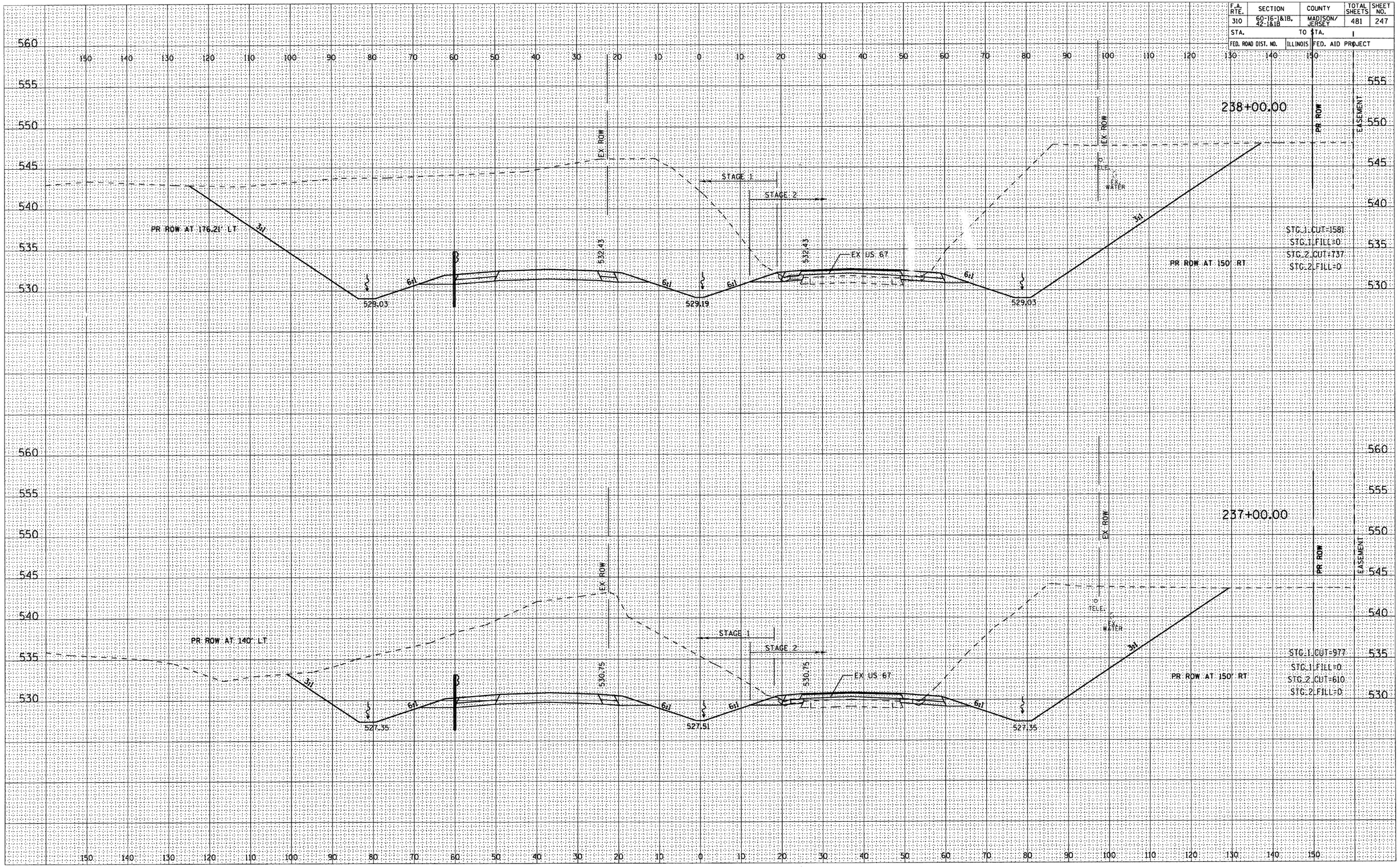

FINAL SURVEY		BY	DATE
NOTE BOOK NO.	SURVEYED		
	PLOTTED		
	TEMPLATE		
	AREAS		
	AREAS CHECKED		

ORIGINAL SURVEY		BY	DATE
NOTE BOOK NO.	SURVEYED		
	PLOTTED		
	TEMPLATE		
	AREAS		
	AREAS CHECKED		

F.A. RTE.	SECTION	COUNTY	TOTAL SHEETS	SHEET NO.
310	60-16-1&1B, 42-1&1B	MADISON/ JERSEY	481	248
STA.		TO STA.		
FED. ROAD DIST. NO.	ILLINOIS	FED. AID PROJECT		

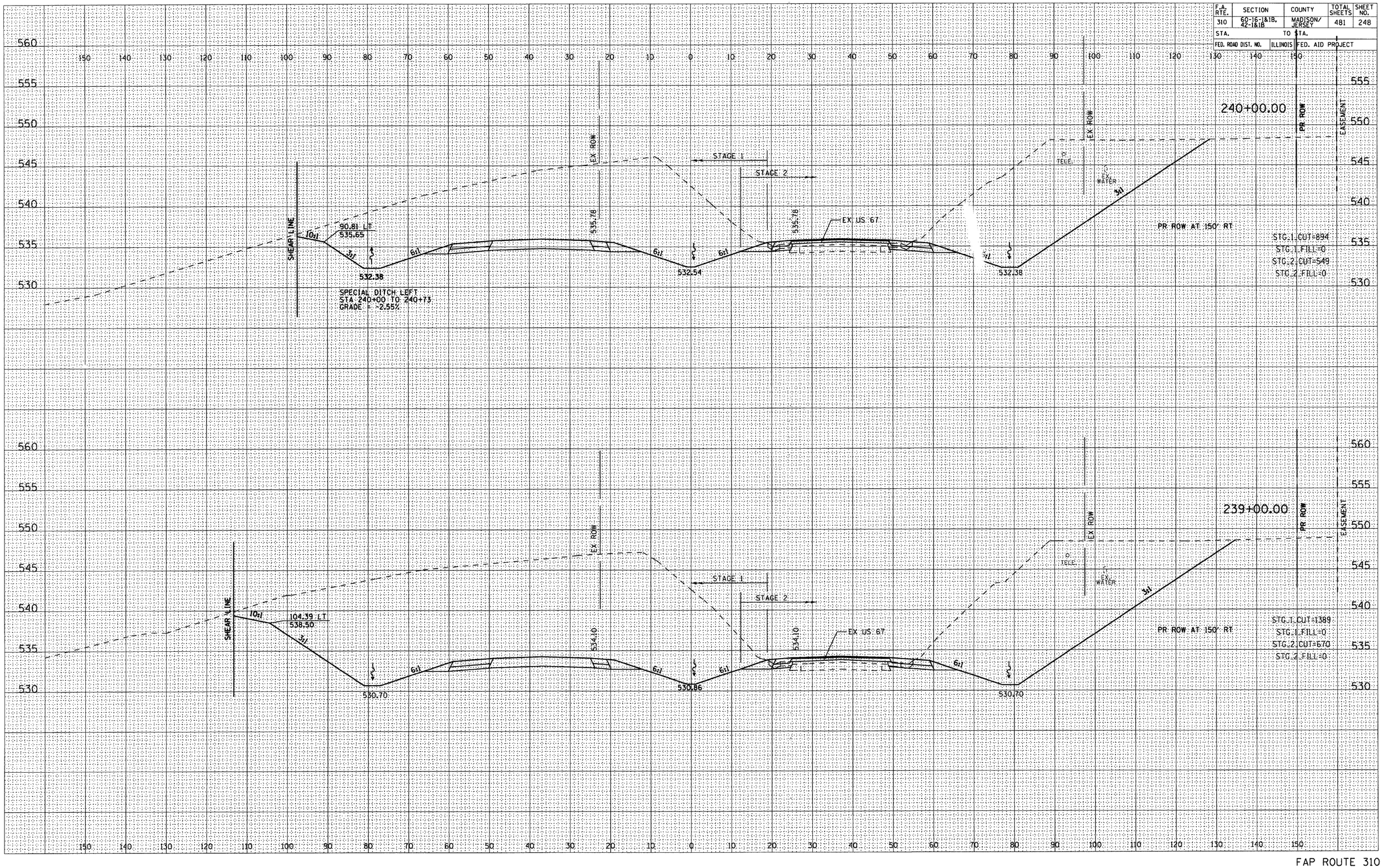

FINAL SURVEY	BY	DATE
NOTE BOOK	SURVEYED	
NO.	PLOTTED	
	TEMPLATE	
	AREAS	
	AREAS CHECKED	

ORIGINAL SURVEY	BY	DATE
NOTE BOOK	SURVEYED	
NO.	PLOTTED	
	TEMPLATE	
	AREAS	
	AREAS CHECKED	

F.A. RTE.	SECTION	COUNTY	TOTAL SHEETS	SHEET NO.
310	60-16-1&1B, 42-1&1B	MADISON/ JERSEY	481	249
STA.		TO STA.		
FED. ROAD DIST. NO.	ILLINOIS	FED. AID PROJECT		

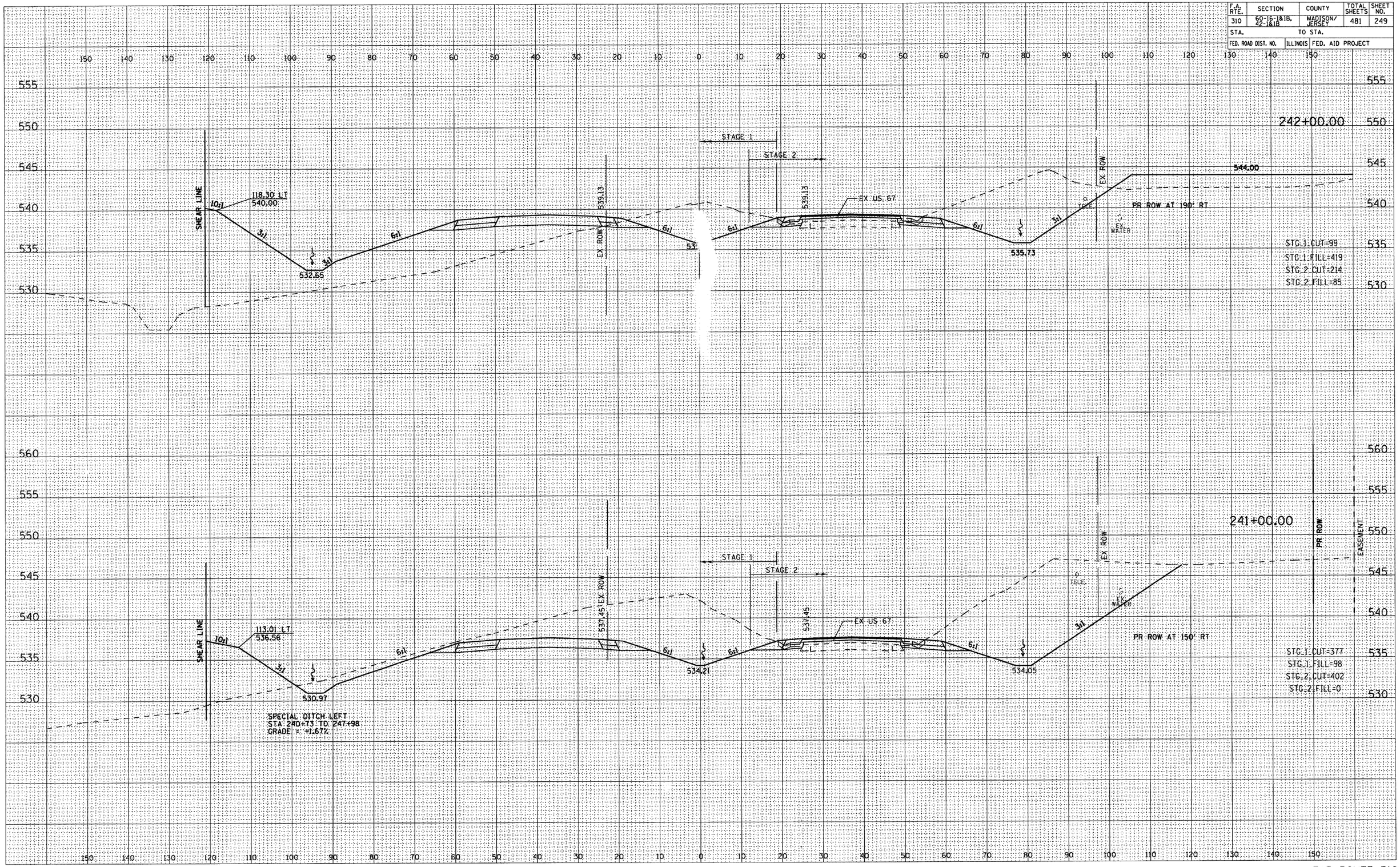

FINAL SURVEY		BY	DATE
	SURVEYED		
	PLOTTED		
NOTE BOOK	TEMPLATE		
	AREAS		
NO.	AREAS CHECKED		

ORIGINAL SURVEY		BY	DATE
	SURVEYED		
	PLOTTED		
NOTE BOOK	TEMPLATE		
	AREAS		
NO.	AREAS CHECKED		

F.A. RTE.	SECTION	COUNTY	TOTAL SHEETS	SHEET NO.
310	60-16-1&1B, 42-1&1B	MADISON/ JERSEY	481	250
STA.		TO STA.		
FED. ROAD DIST. NO.	ILLINOIS	FED. AID PROJECT		

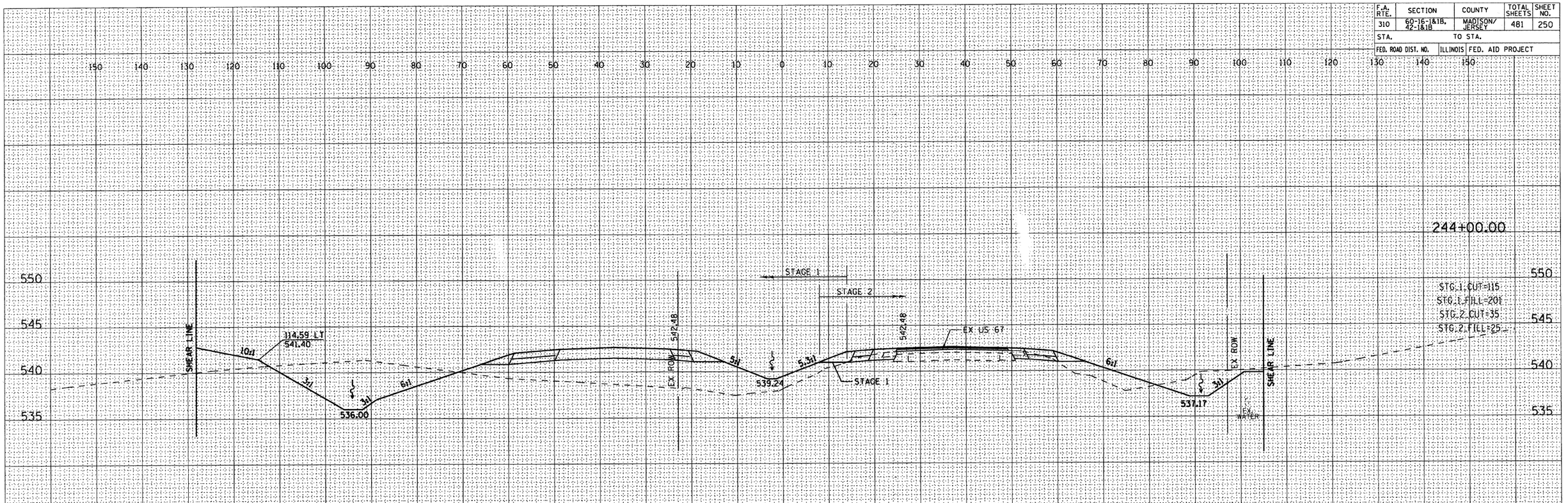

ORIGINAL SURVEY	BY	DATE
SURVEYED		
PLOTTED		
NOTE BOOK TEMPLATE		
AREAS		
NO. AREAS CHECKED		

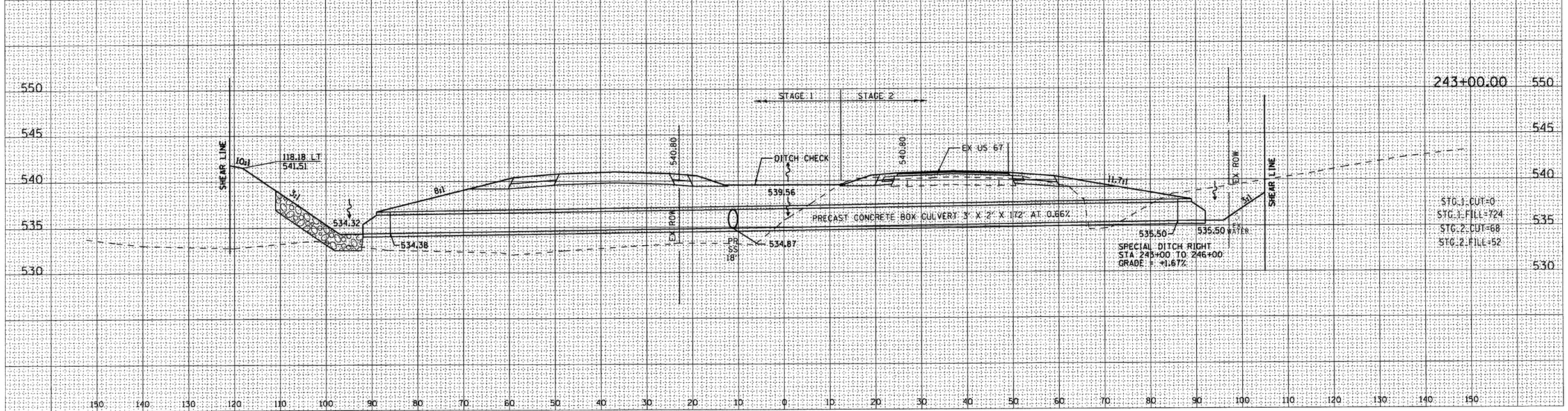

FINAL SURVEY	BY	DATE
SURVEYED		
PLOTTED		
NOTE BOOK TEMPLATE		
AREAS		
NO. AREAS CHECKED		

FAP ROUTE 310

F.A. RTE.	SECTION	COUNTY	TOTAL SHEETS	SHEET NO.
310	60-16-1&1B, 42-1&1B	MADISON/ JERSEY	481	251
STA.		TO STA.		
FED. ROAD DIST. NO.	ILLINOIS	FED. AID PROJECT		

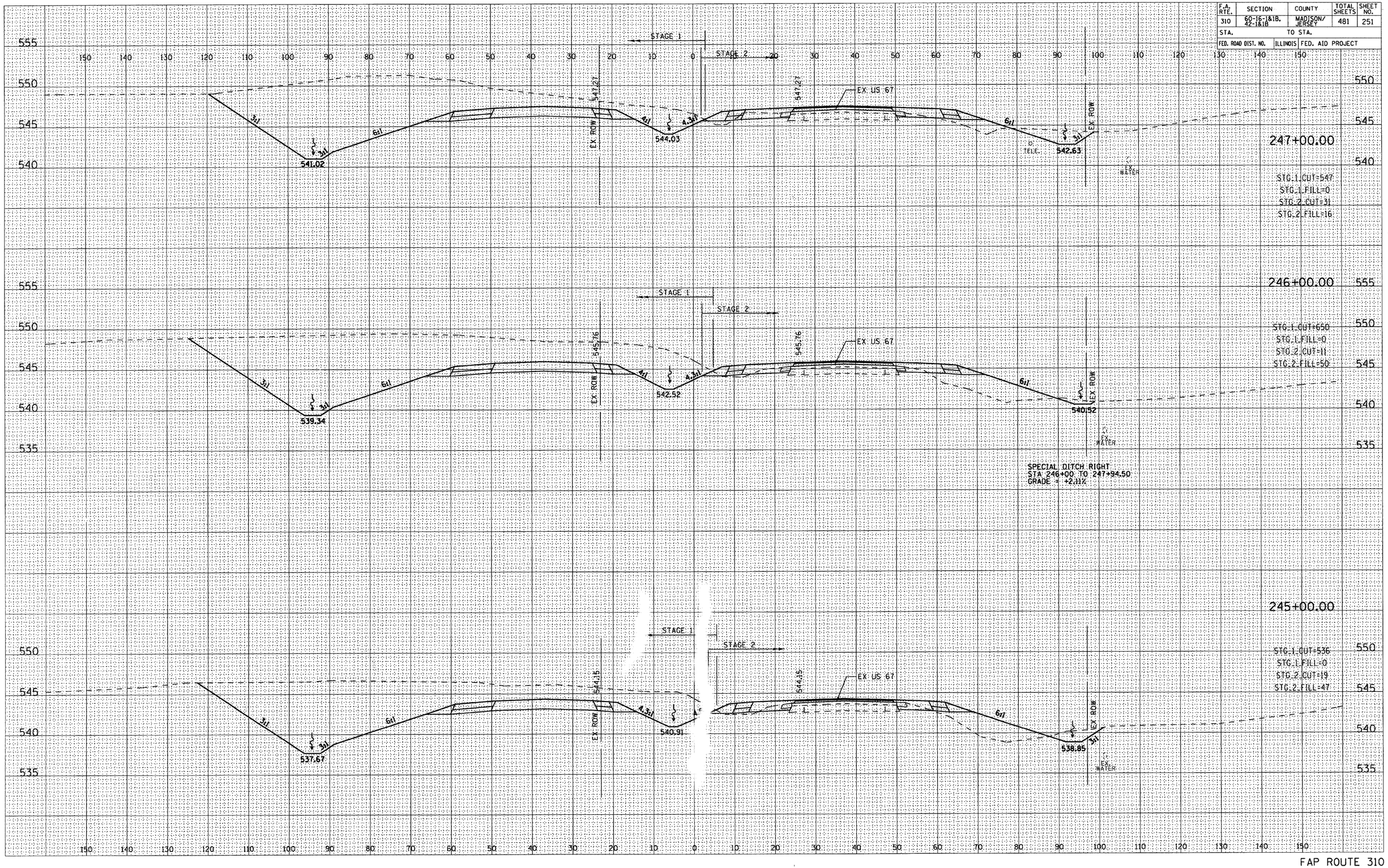

FINAL SURVEY	BY	DATE
NOTE BOOK	SURVEYED	
	PLOTTED	
	TEMPLATE	
	AREAS	
NO.	AREAS CHECKED	

ORIGINAL SURVEY	BY	DATE
NOTE BOOK	SURVEYED	
	PLOTTED	
	TEMPLATE	
	AREAS	
NO.	AREAS CHECKED	

F.A. RTE.	SECTION	COUNTY	TOTAL SHEETS	SHEET NO.
310	60-16-1&1B, 42-1&1B	MADISON/ JERSEY	481	252
STA.		TO STA.		
FED. ROAD DIST. NO.	ILLINOIS	FED. AID PROJECT		

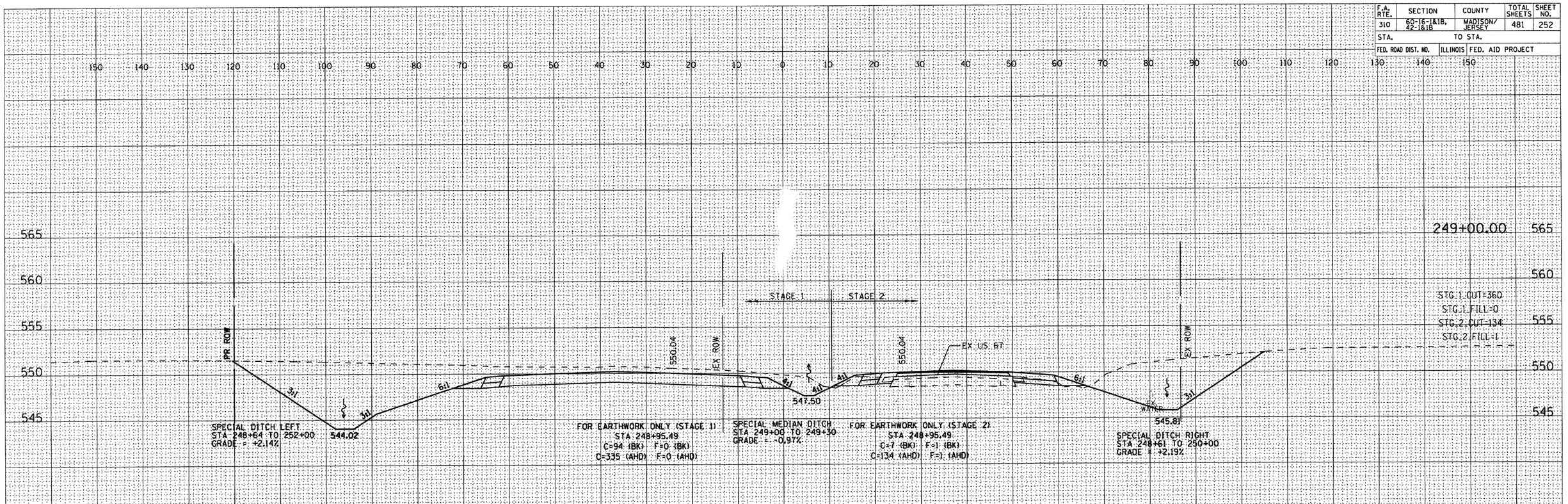

FINAL SURVEY	BY	DATE
SURVEYED		
PLOTTED		
TEMPLATE		
AREAS		
AREAS CHECKED		
NOTE BOOK NO.		

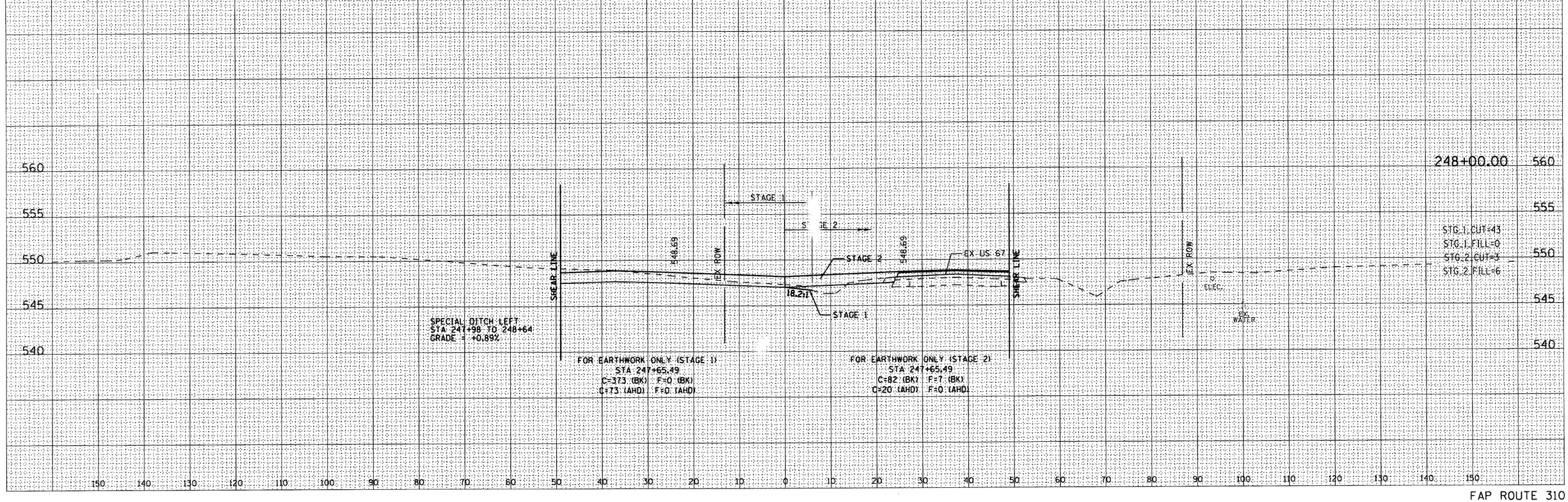

ORIGINAL SURVEY	BY	DATE
SURVEYED		
PLOTTED		
TEMPLATE		
AREAS		
AREAS CHECKED		
NOTE BOOK NO.		

F.A. RTE.	SECTION	COUNTY	TOTAL SHEETS	SHEET NO.
310	60-16-1&1B, 42-1&1B	MADISON/ JERSEY	481	253
STA.		TO STA.		
FED. ROAD DIST. NO.	ILLINOIS	FED. AID PROJECT		

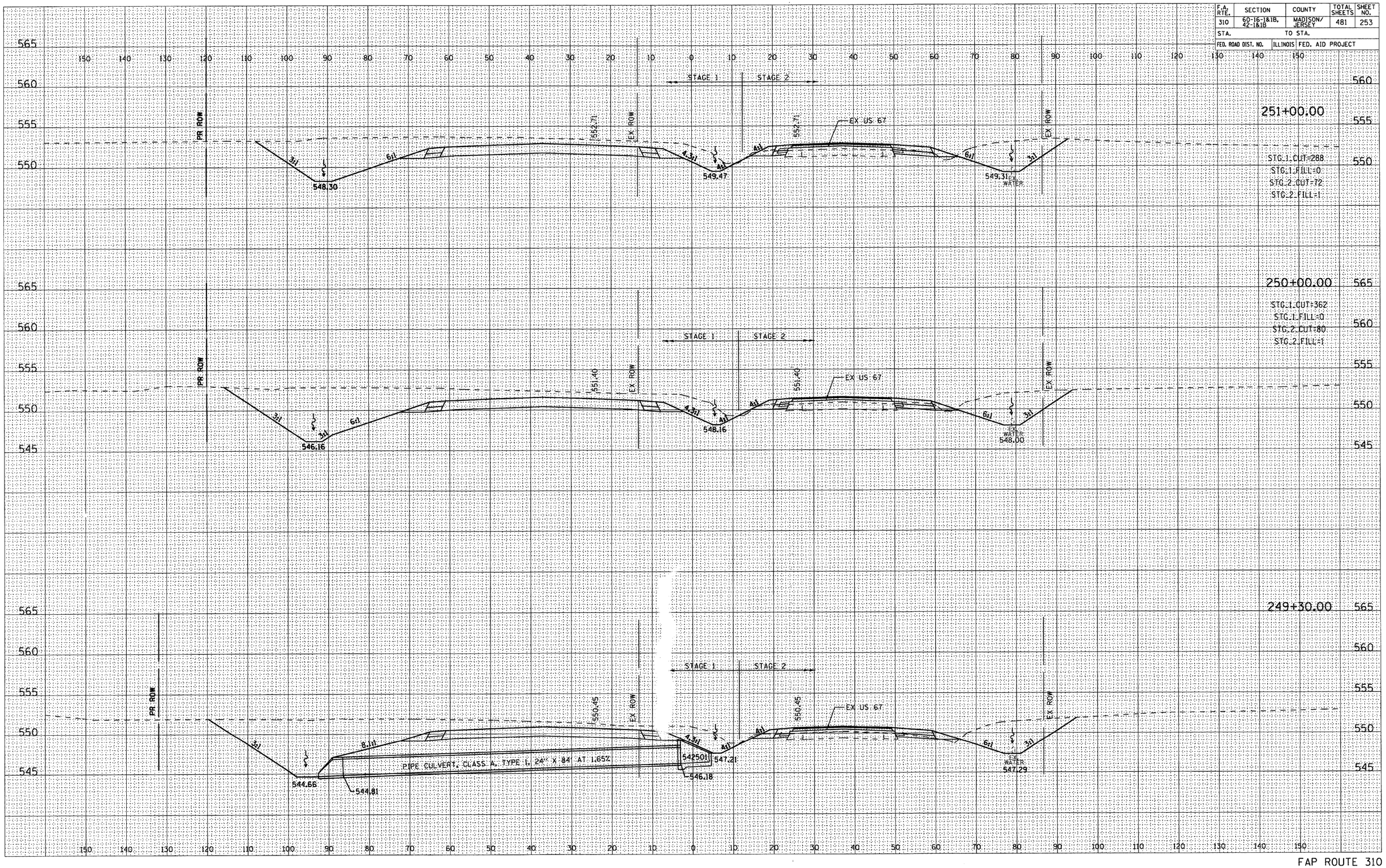

FINAL SURVEY	BY	DATE
SURVEYED		
PLOTTED		
TEMPLATE		
AREAS		
AREAS CHECKED		
NOTE BOOK NO.		

ORIGINAL SURVEY	BY	DATE
SURVEYED		
PLOTTED		
TEMPLATE		
AREAS		
AREAS CHECKED		
NOTE BOOK NO.		

FAP ROUTE 310

F.A. RTE.	SECTION	COUNTY	TOTAL SHEETS	SHEET NO.
310	60-16-1&1B, 42-1&1B	MADISON/ JERSEY	481	254
STA.		TO STA.		
FED. ROAD DIST. NO.	ILLINOIS	FED. AID PROJECT		

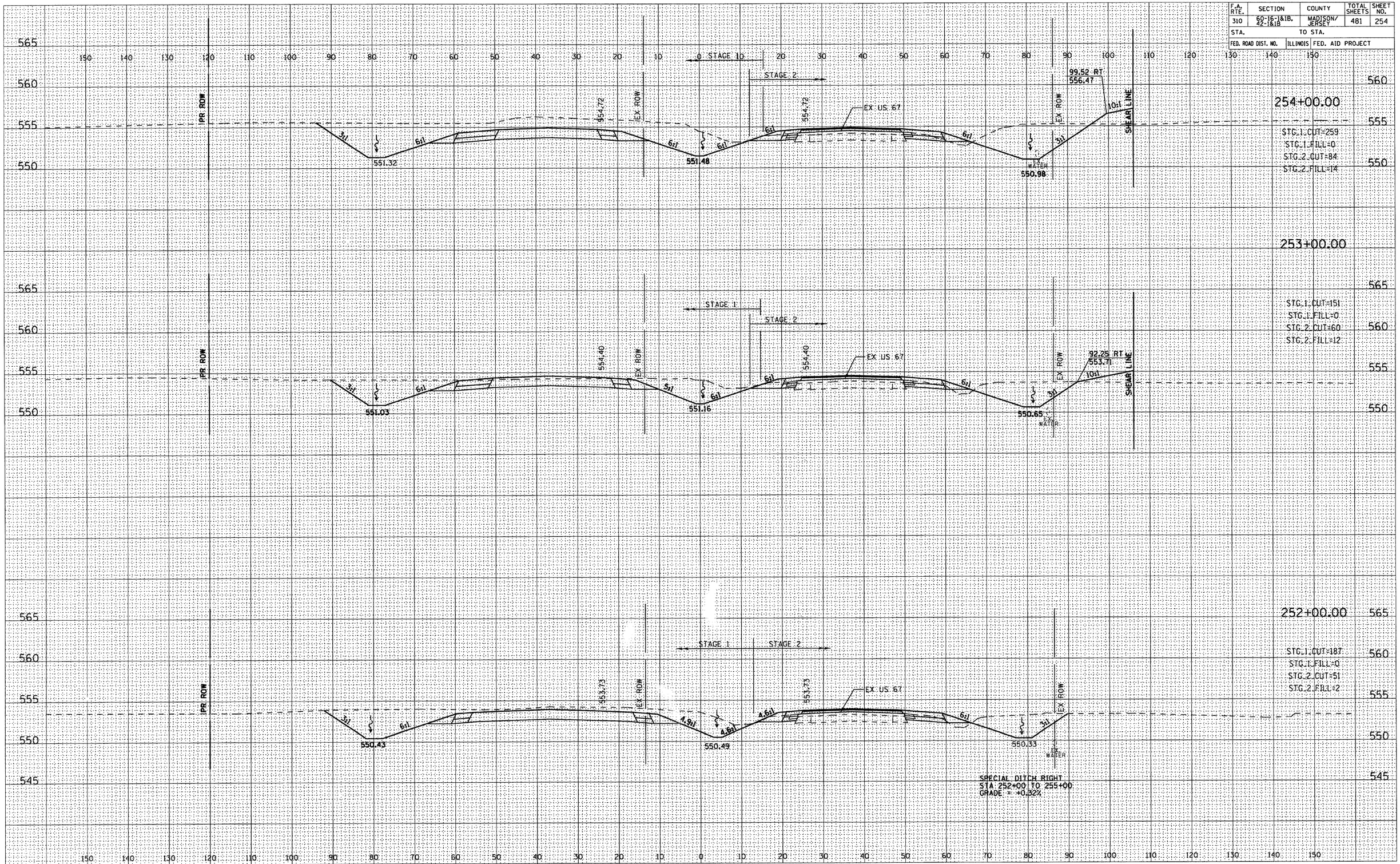

FINAL SURVEY		BY	DATE
	SURVEYED		
	PLOTTED		
NOTE BOOK	TEMPLATE		
	AREAS		
NO.	AREAS CHECKED		

ORIGINAL SURVEY		BY	DATE
	SURVEYED		
	PLOTTED		
NOTE BOOK	TEMPLATE		
	AREAS		
NO.	AREAS CHECKED		

F.A. RTE.	SECTION	COUNTY	TOTAL SHEETS	SHEET NO.
310	60-15-1&1B, 42-1&1B	MADISON/ JERSEY	481	255
STA.		TO STA.		
FED. ROAD DIST. NO.	ILLINOIS	FED. AID PROJECT		

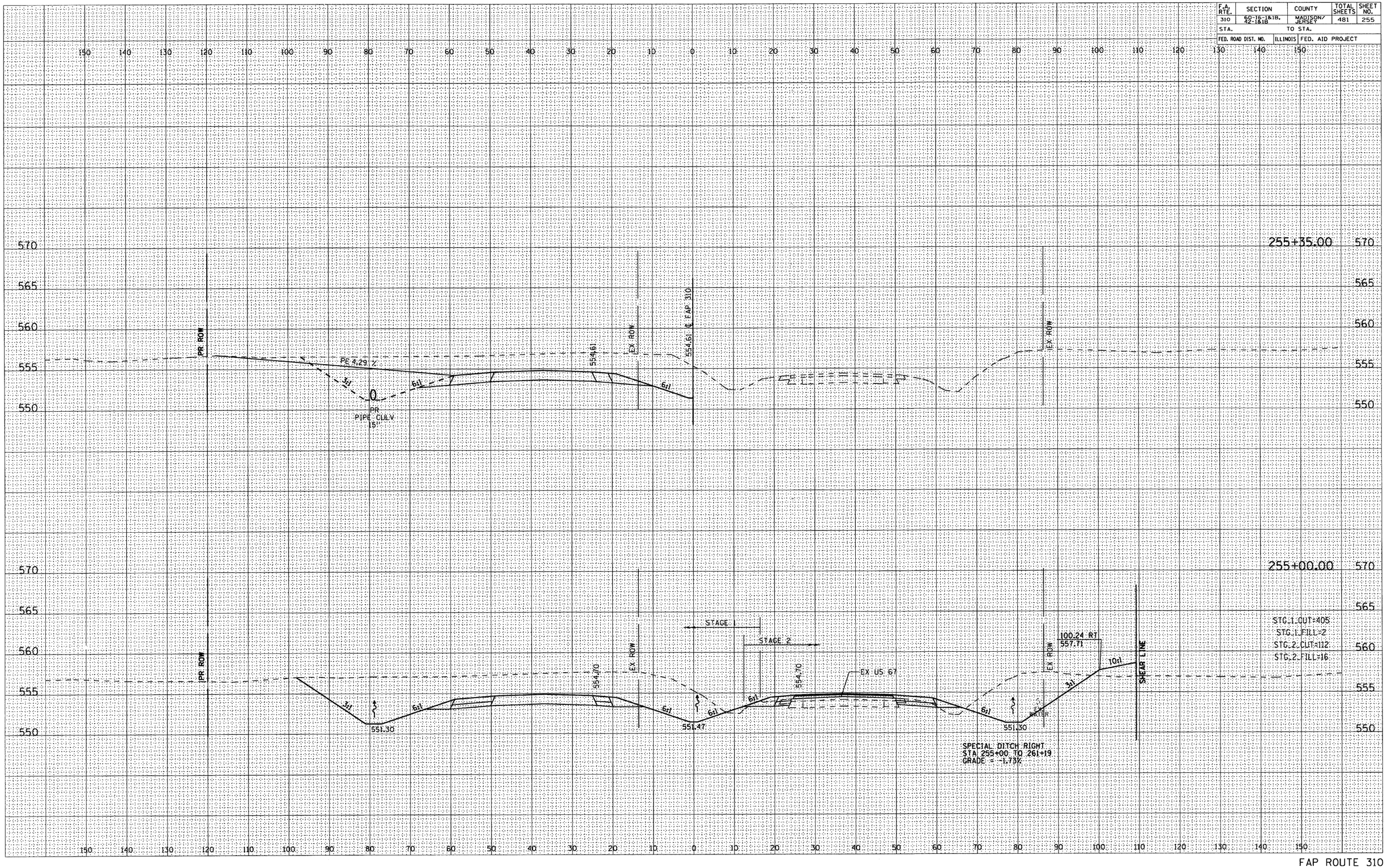

FINAL SURVEY	BY	DATE
SURVEYED		
PLOTTED		
TEMPLATE		
AREAS		
AREAS CHECKED		
NOTE BOOK NO.		

ORIGINAL SURVEY	BY	DATE
SURVEYED		
PLOTTED		
TEMPLATE		
AREAS		
AREAS CHECKED		
NOTE BOOK NO.		

F.A. RTE.	SECTION	COUNTY	TOTAL SHEETS	SHEET NO.
310	60-16-1&1B, 42-1&1B	MADISON/ JERSEY	481	256
STA.		TO STA.		
FED. ROAD DIST. NO.	ILLINOIS	FED. AID PROJECT		

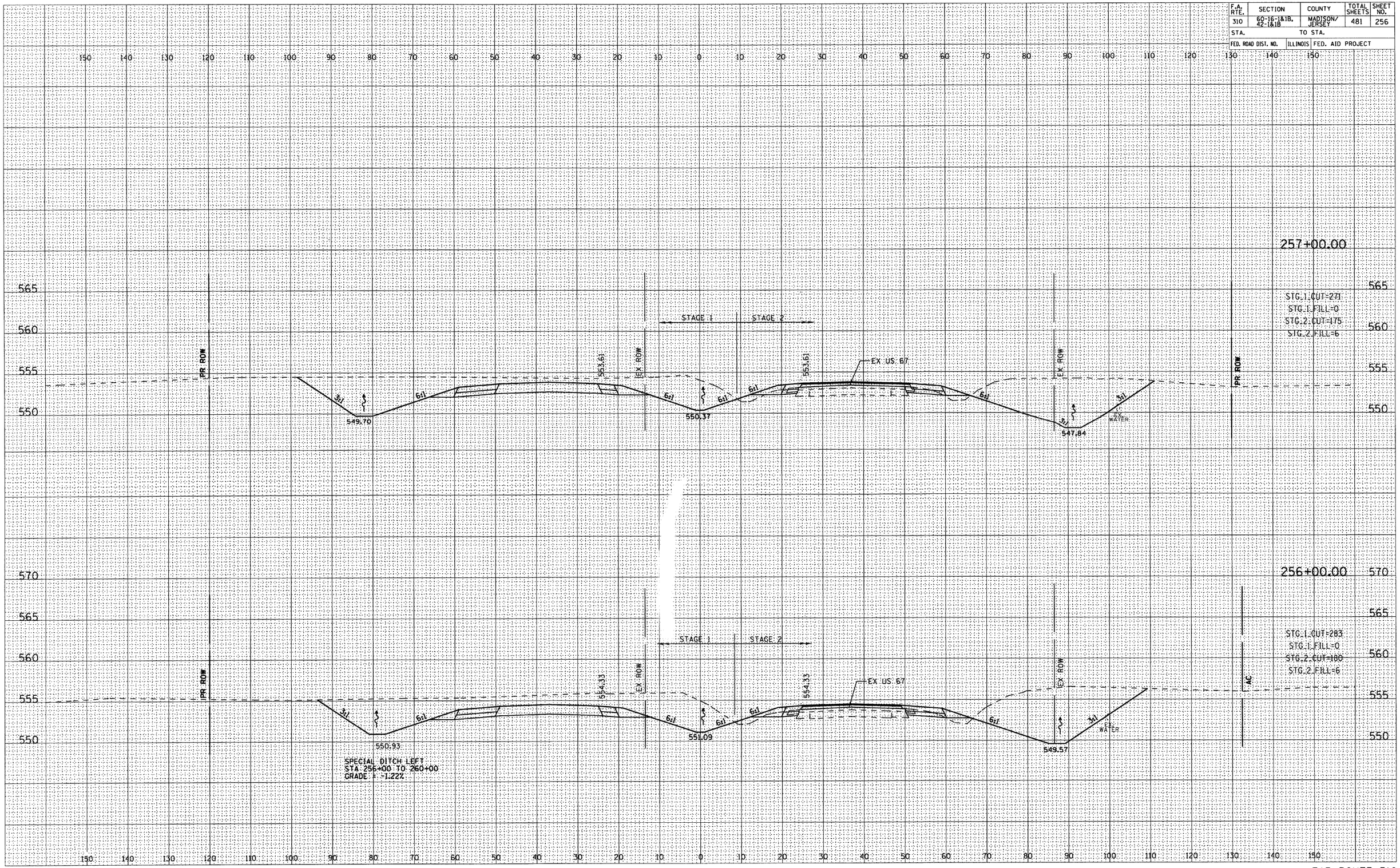

FINAL SURVEY	BY	DATE
SURVEYED		
PLOTTED		
TEMPLATE		
AREAS		
AREAS CHECKED		
NOTE BOOK NO.		

ORIGINAL SURVEY	BY	DATE
SURVEYED		
PLOTTED		
TEMPLATE		
AREAS		
AREAS CHECKED		
NOTE BOOK NO.		

FAP ROUTE 310

F.A. RTE.	SECTION	COUNTY	TOTAL SHEETS	SHEET NO.
310	60-16-1&1B, 42-1&1B	MADISON/ JERSEY	481	257
STA.		TO STA.		
FED. ROAD DIST. NO.	ILLINOIS	FED. AID PROJECT		

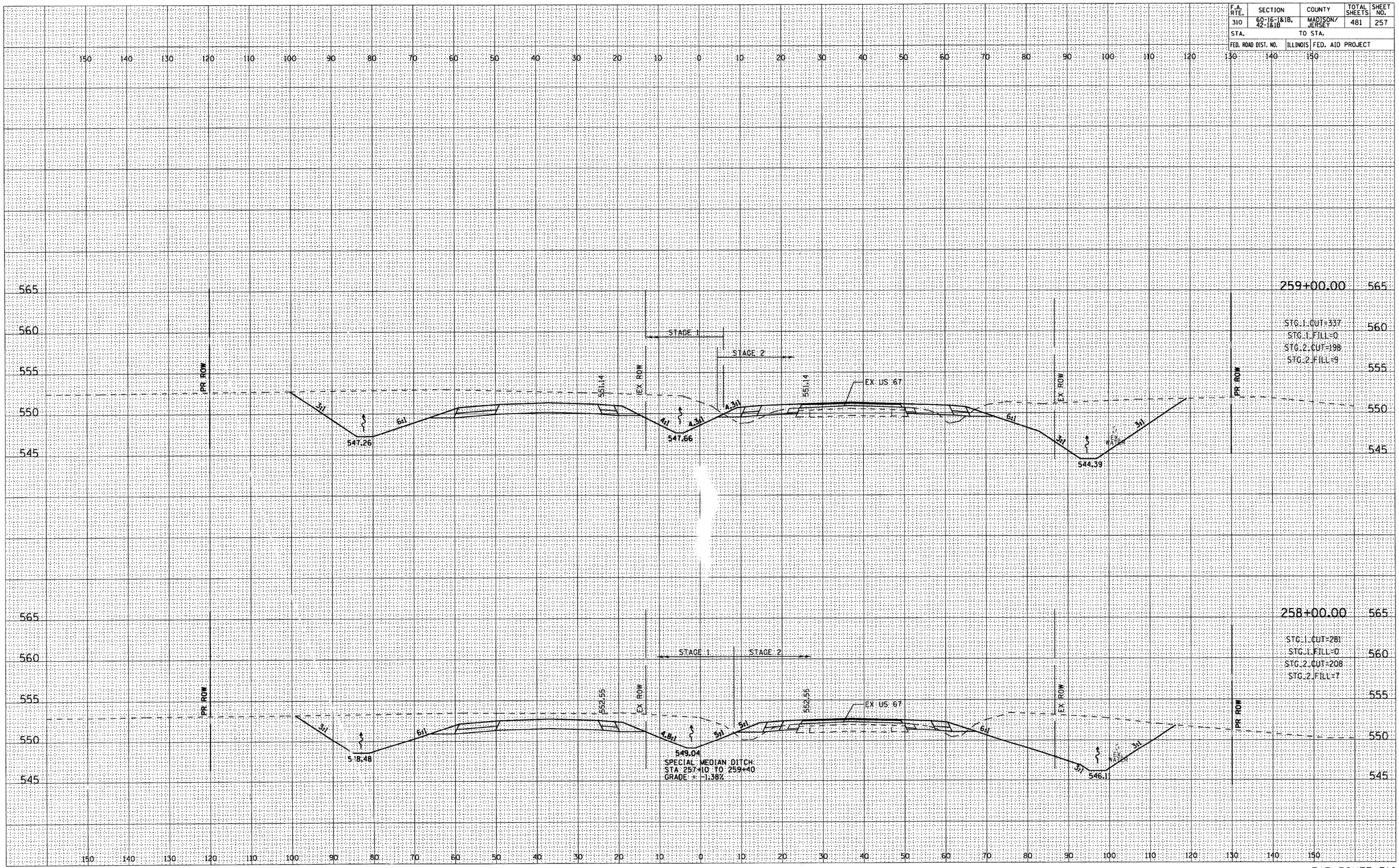

FINAL SURVEY		BY	DATE
NOTE BOOK	SURVEYED		
	PLOTTED		
	TEMPLATE		
	AREAS		
NO.	AREAS CHECKED		

ORIGINAL SURVEY		BY	DATE
NOTE BOOK	SURVEYED		
	PLOTTED		
	TEMPLATE		
	AREAS		
NO.	AREAS CHECKED		

F.A. RTE.	SECTION	COUNTY	TOTAL SHEETS	SHEET NO.
310	60-16-1&1B, 42-1&1B	MADISON/ JERSEY	481	258
STA.		TO STA.		
FED. ROAD DIST. NO.	ILLINOIS	FED. AID PROJECT		

FINAL SURVEY	BY	DATE
SURVEYED		
PLOTTED		
TEMPLATE		
AREAS		
AREAS CHECKED		
NOTE BOOK		
NO.		

ORIGINAL SURVEY	BY	DATE
SURVEYED		
PLOTTED		
TEMPLATE		
AREAS		
AREAS CHECKED		
NOTE BOOK		
NO.		

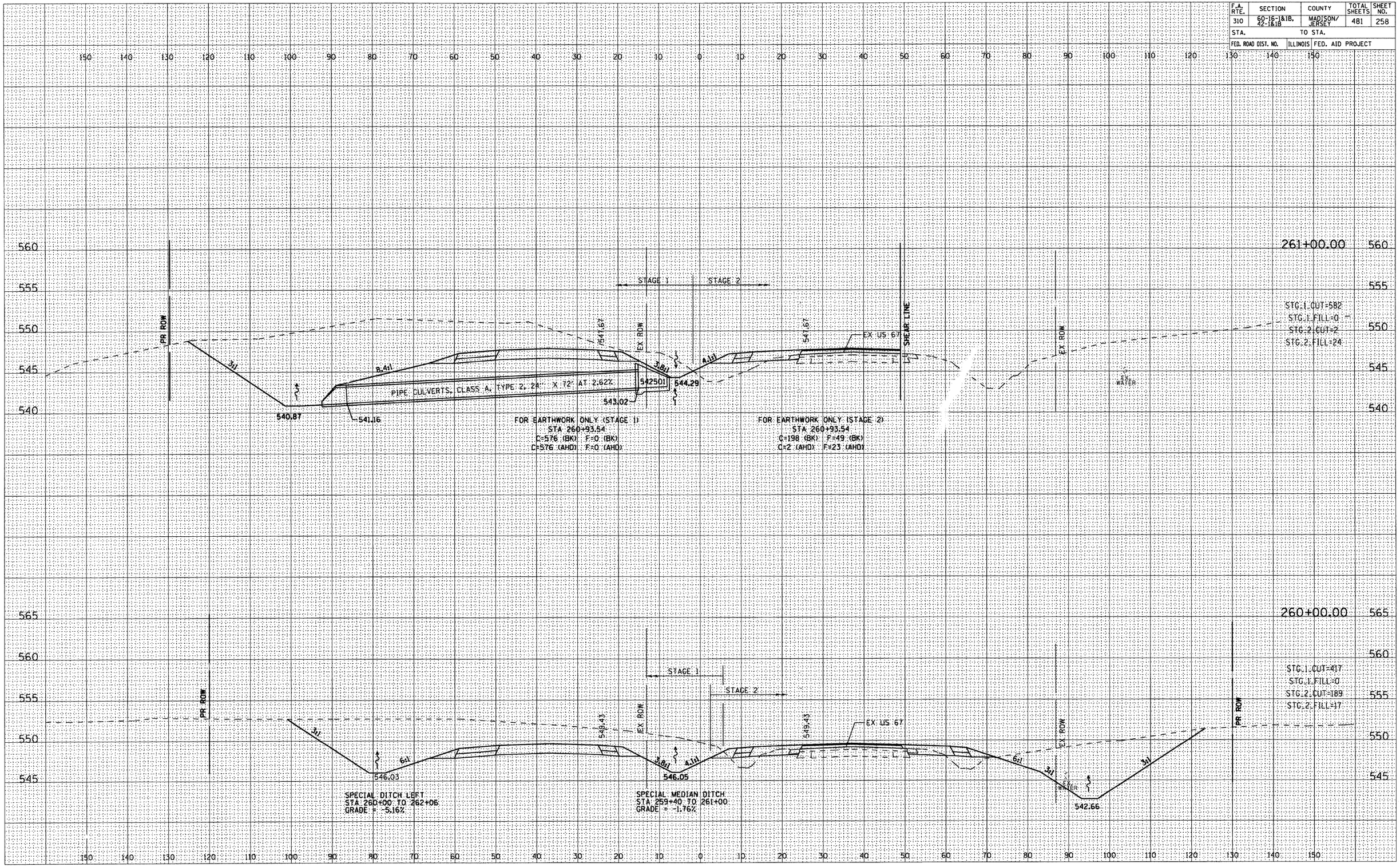

FAP ROUTE 310

F.A. RTE.	SECTION	COUNTY	TOTAL SHEETS	SHEET NO.
310	60-16-1&1B, 42-1&1B	MADISON/ JERSEY	481	259
STA.		TO STA.		
FED. ROAD DIST. NO.	ILLINOIS	FED. AID PROJECT		

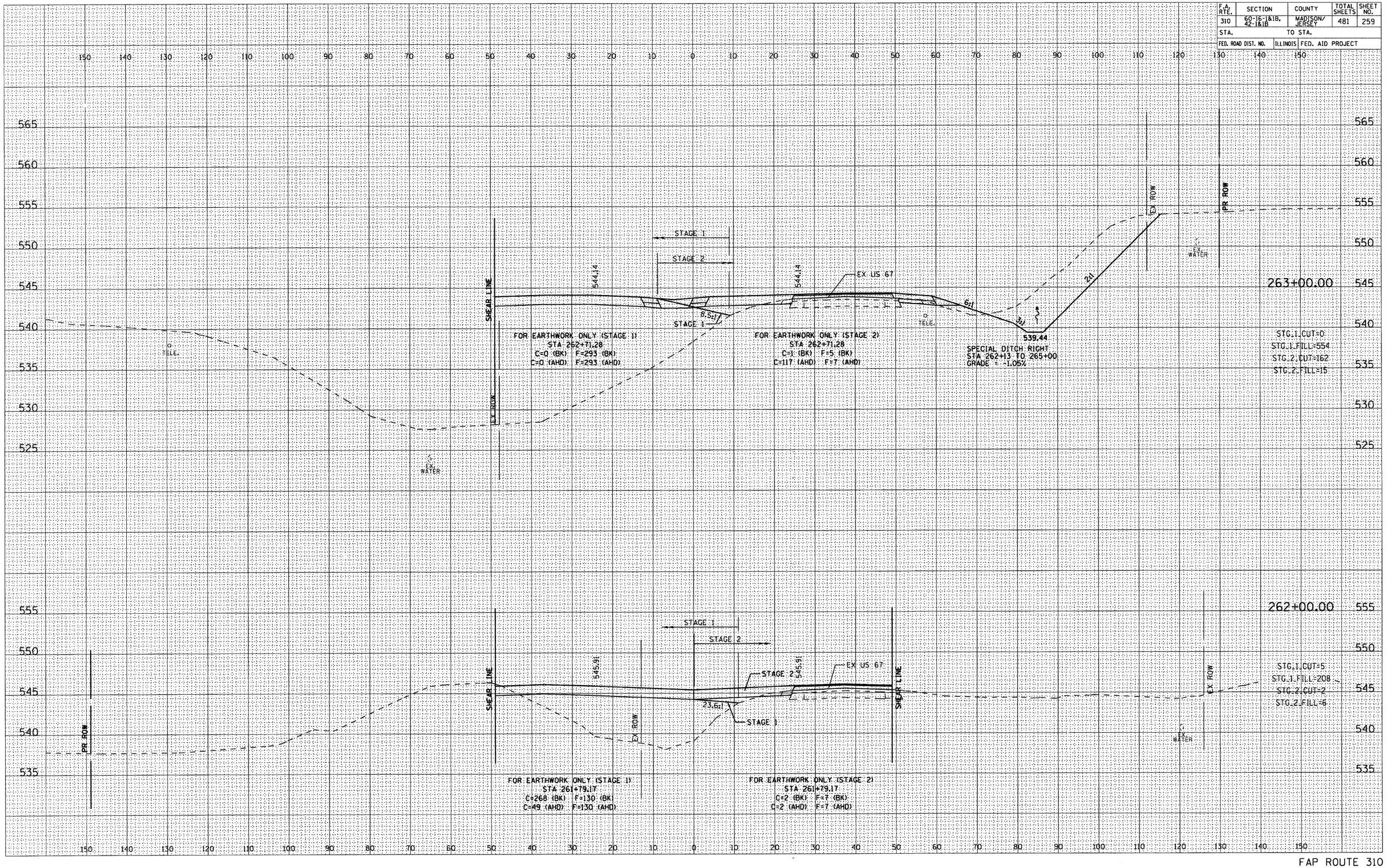

FINAL SURVEY	BY	DATE
NOTE BOOK	SURVEYED	
NO.	PLOTTED	
	TEMPLATE	
	AREAS	
	AREAS CHECKED	

ORIGINAL SURVEY	BY	DATE
NOTE BOOK	SURVEYED	
NO.	PLOTTED	
	TEMPLATE	
	AREAS	
	AREAS CHECKED	

F.A. RTE.	SECTION	COUNTY	TOTAL SHEETS	SHEET NO.
310	60-16-1&1B, 42-1&1B	MADISON/ JERSEY	481	260
STA.		TO STA.		
FED. ROAD DIST. NO.	ILLINOIS	FED. AID PROJECT		

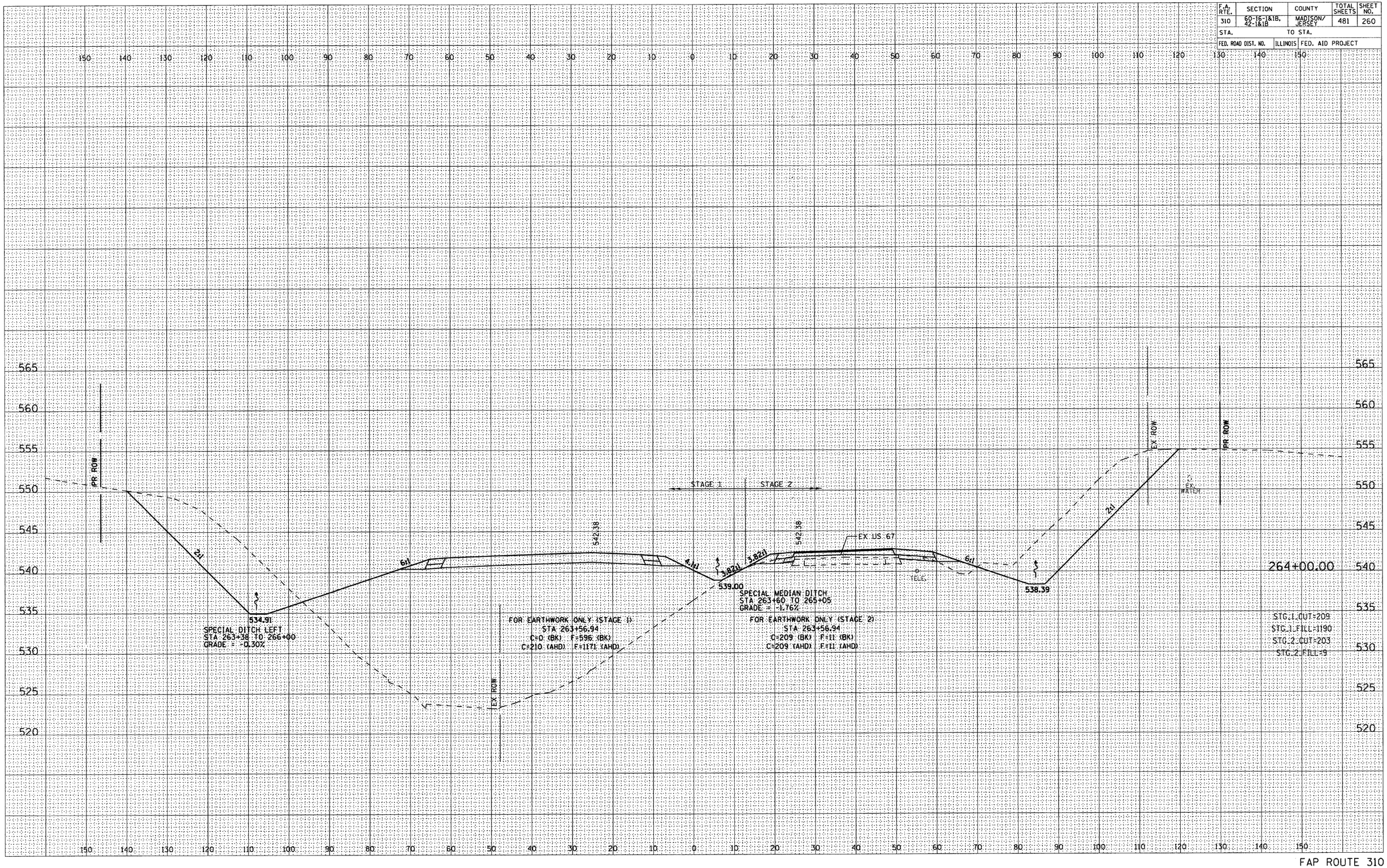

FINAL SURVEY		BY	DATE
NOTE BOOK NO.	SURVEYED		
	PLOTTED		
	TEMPLATE		
	AREAS		
	AREAS CHECKED		

ORIGINAL SURVEY		BY	DATE
NOTE BOOK NO.	SURVEYED		
	PLOTTED		
	TEMPLATE		
	AREAS		
	AREAS CHECKED		

F.A. RTE.	SECTION	COUNTY	TOTAL SHEETS	SHEET NO.
310	60-16-I&1B, 42-I&1B	MADISON/ JERSEY	481	261
STA.		TO STA.		
FED. ROAD DIST. NO.		ILLINOIS	FED. AID PROJECT	

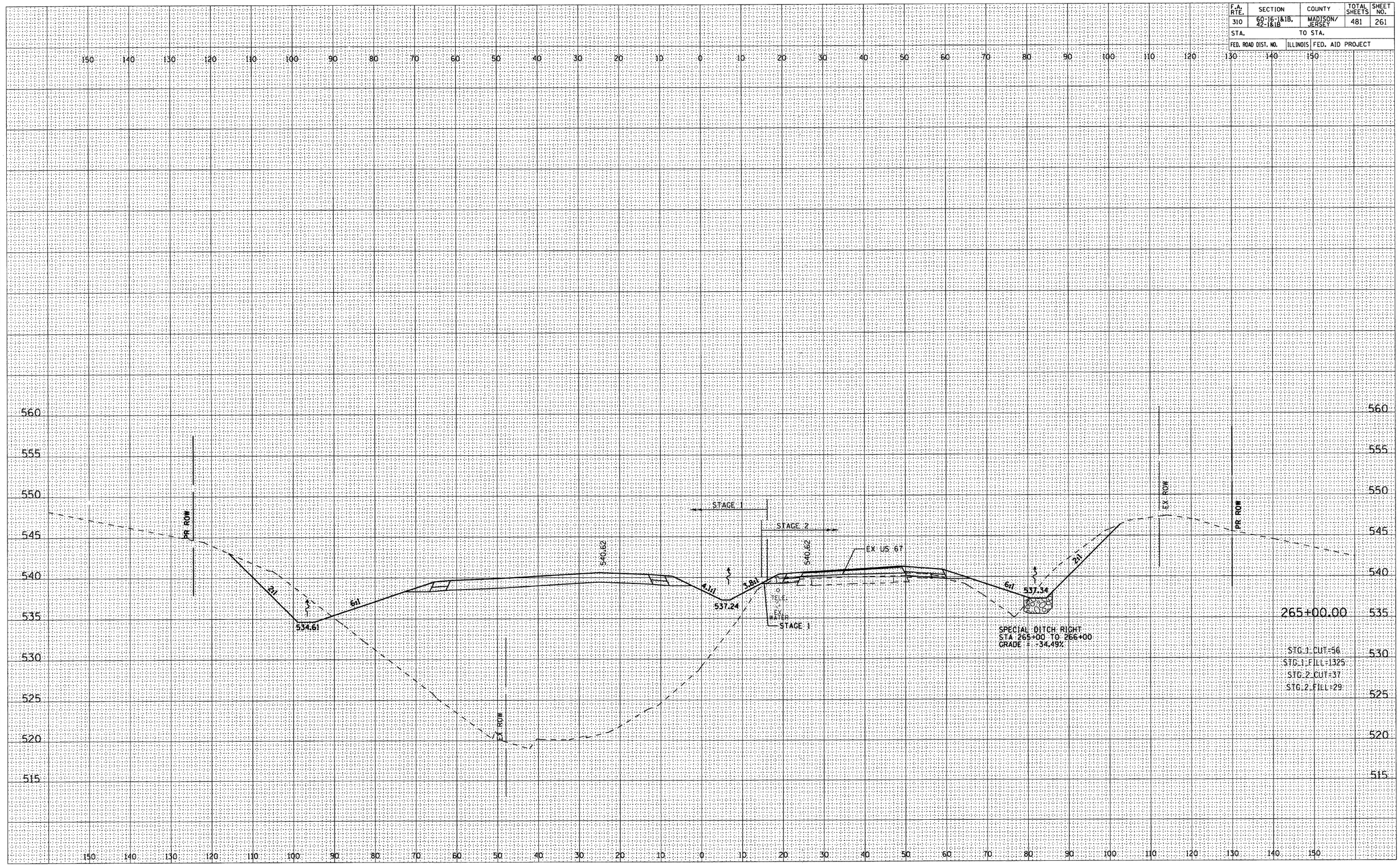

FINAL SURVEY
NOTE BOOK NO.
SURVEYED
PLOTTED
TEMPLATE
AREAS
AREAS CHECKED
BY
DATE

ORIGINAL SURVEY
NOTE BOOK NO.
SURVEYED
PLOTTED
TEMPLATE
AREAS
AREAS CHECKED
BY
DATE

F.A. RTE.	SECTION	COUNTY	TOTAL SHEETS	SHEET NO.
310	60-16-1&1B, 42-1&1B	MADISON/ JERSEY	481	262
STA.		TO STA.		
FED. ROAD DIST. NO.	ILLINOIS	FED. AID PROJECT		

FINAL SURVEY	BY	DATE
SURVEYED		
PLOTTED		
TEMPLATE		
AREAS		
AREAS CHECKED		
NOTE BOOK NO.		

ORIGINAL SURVEY	BY	DATE
SURVEYED		
PLOTTED		
TEMPLATE		
AREAS		
AREAS CHECKED		
NOTE BOOK NO.		

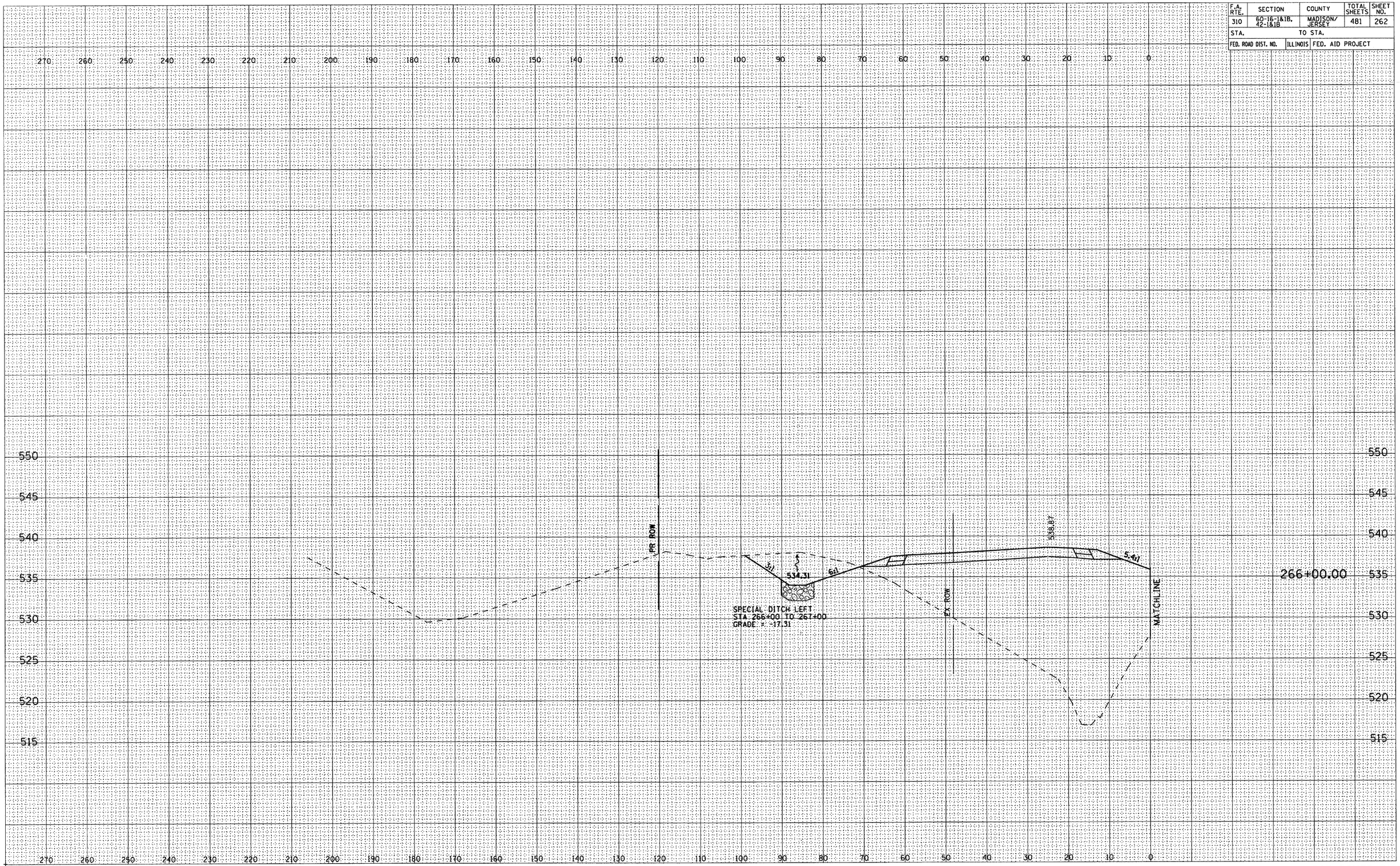

FAP ROUTE 310

F.A. RTE.	SECTION	COUNTY	TOTAL SHEETS	SHEET NO.
310	60-16-1&1B, 42-1&1B	MADISON/ JERSEY	481	263
STA.		TO STA.		
FED. ROAD DIST. NO.	ILLINOIS	FED. AID PROJECT		

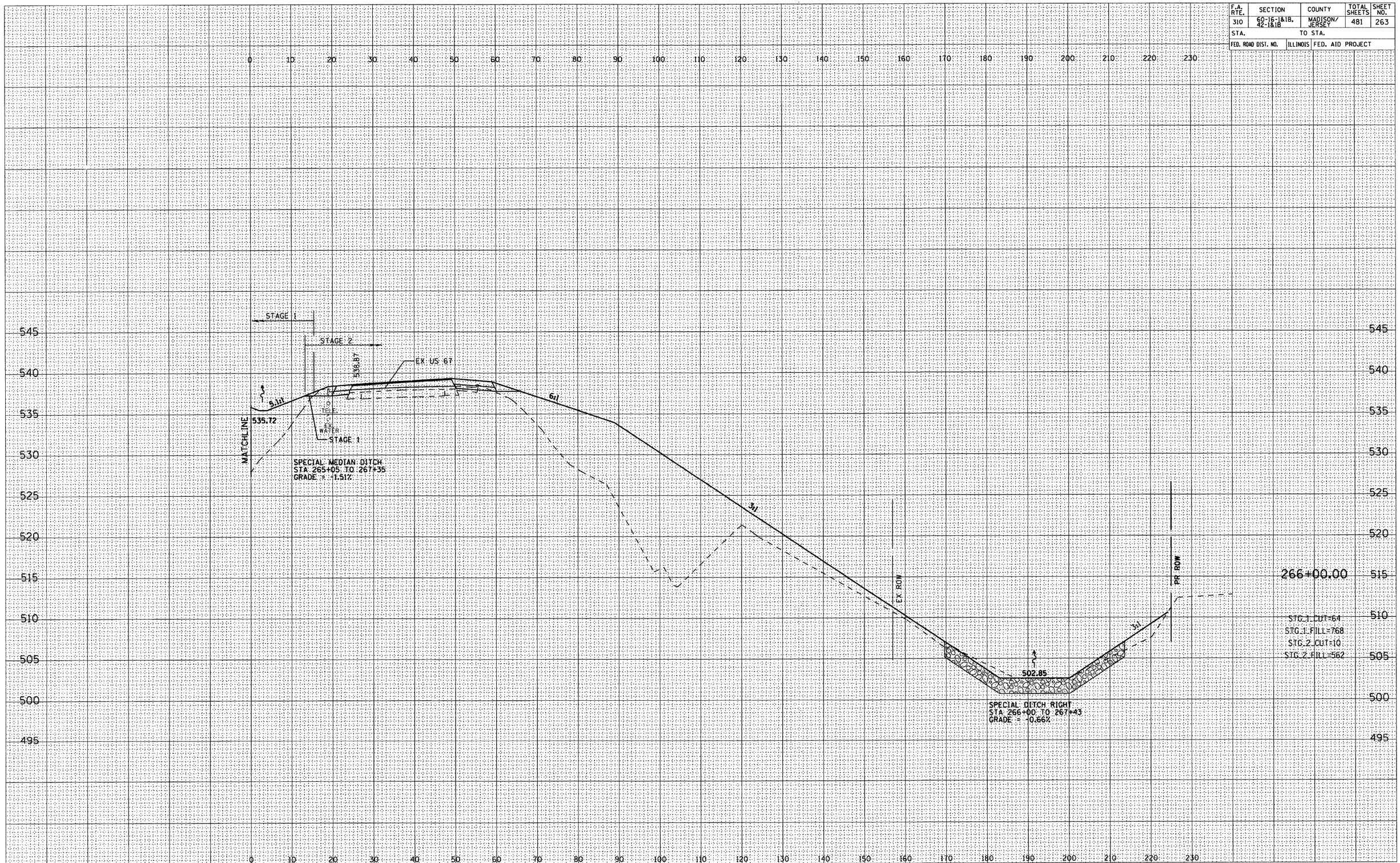

FINAL SURVEY	BY	DATE
SURVEYED		
PLOTTED		
TEMPLATE		
AREAS		
AREAS CHECKED		
NOTE BOOK NO.		

ORIGINAL SURVEY	BY	DATE
SURVEYED		
PLOTTED		
TEMPLATE		
AREAS		
AREAS CHECKED		
NOTE BOOK NO.		

F.A. RTE.	SECTION	COUNTY	TOTAL SHEETS	SHEET NO.
310	60-16-1&1B, 42-1&1B	MADISON/ JERSEY	481	264
STA.		TO STA.		
FED. ROAD DIST. NO.	ILLINOIS	FED. AID PROJECT		

FINAL SURVEY	BY	DATE
SURVEYED		
PLOTTED		
TEMPLATE		
AREAS		
AREAS CHECKED		
NOTE BOOK NO.		

ORIGINAL SURVEY	BY	DATE
SURVEYED		
PLOTTED		
TEMPLATE		
AREAS		
AREAS CHECKED		
NOTE BOOK NO.		

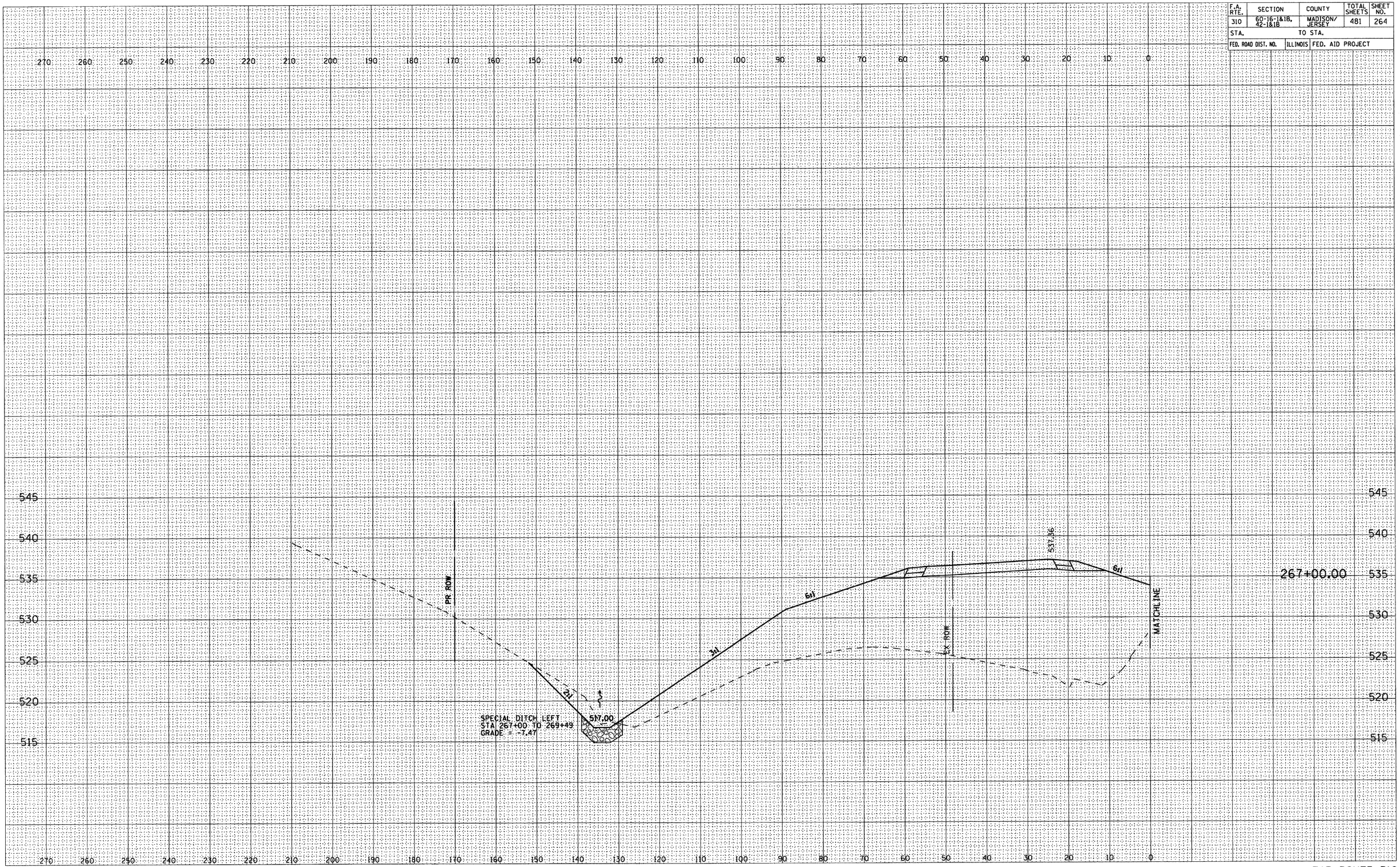

FAP ROUTE 310

F.A. RTE.	SECTION	COUNTY	TOTAL SHEETS	SHEET NO.
310	60-16-I&IB, 42-I&IB	MADISON/ JERSEY	481	265
STA.	TO STA.			
FED. ROAD DIST. NO.	ILLINOIS	FED. AID PROJECT		

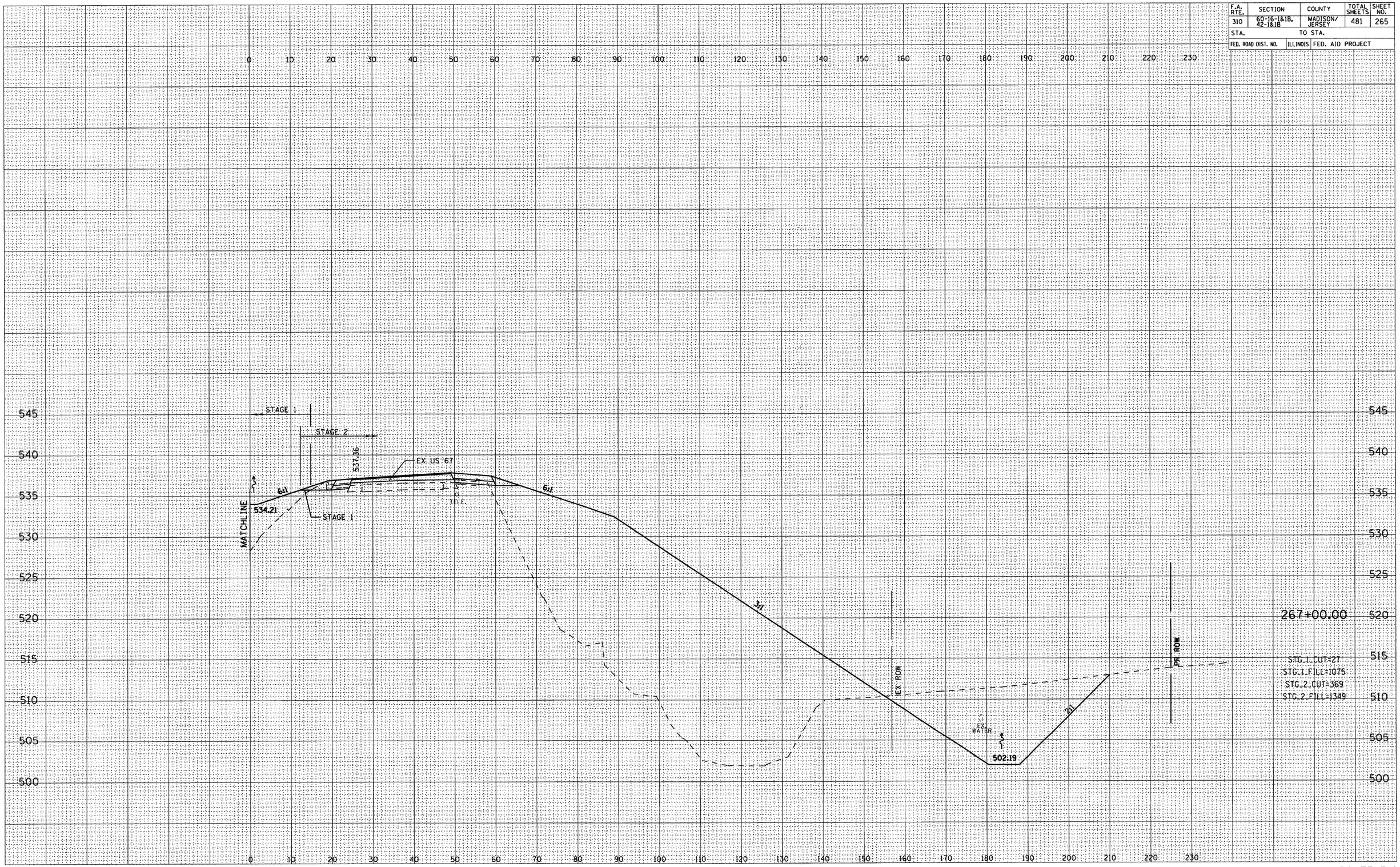

FINAL SURVEY	BY	DATE
SURVEYED		
PLOTTED		
NOTE BOOK TEMPLATE		
AREAS		
NO. AREAS CHECKED		

ORIGINAL SURVEY	BY	DATE
SURVEYED		
PLOTTED		
NOTE BOOK TEMPLATE		
AREAS		
NO. AREAS CHECKED		

F.A. RTE.	SECTION	COUNTY	TOTAL SHEETS	SHEET NO.
310	60-16-1&1B, 42-1&1B	MADISON/ JERSEY	481	266
STA.		TO STA.		
FED. ROAD DIST. NO.	ILLINOIS	FED. AID PROJECT		

FINAL SURVEY	BY	DATE
SURVEYED		
PLOTTED		
TEMPLATE		
AREAS		
AREAS CHECKED		
NOTE BOOK NO.		

ORIGINAL SURVEY	BY	DATE
SURVEYED		
PLOTTED		
TEMPLATE		
AREAS		
AREAS CHECKED		
NOTE BOOK NO.		

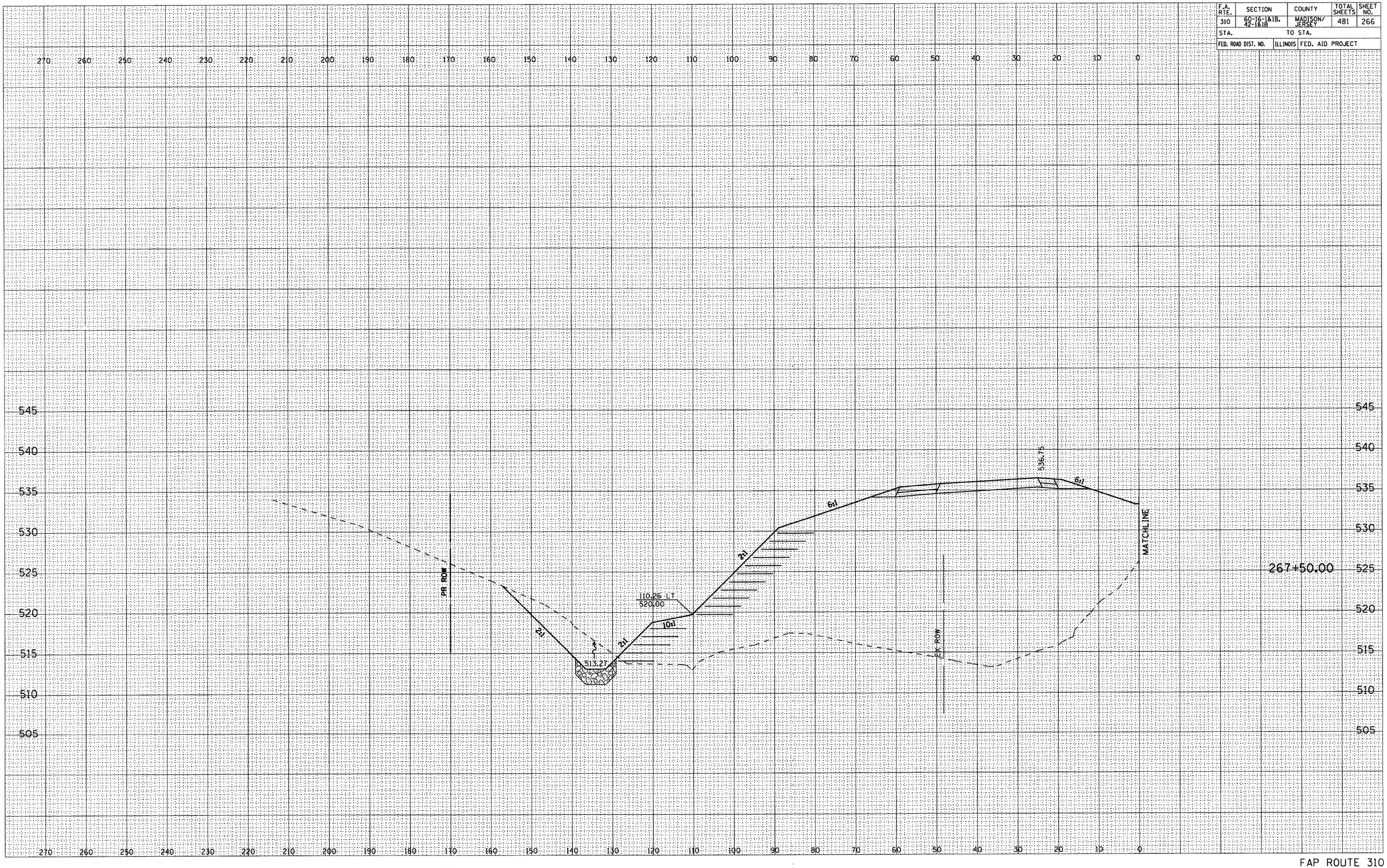

FAP ROUTE 310

F.A. RTE.	SECTION	COUNTY	TOTAL SHEETS	SHEET NO.
310	60-16-1&1B, 42-1&1B	MADISON/ JERSEY	481	267
STA.		TO STA.		
FED. ROAD DIST. NO.	ILLINOIS	FED. AID PROJECT		

FINAL SURVEY		BY	DATE
NOTE BOOK NO.	SURVEYED		
	PLOTTED		
	TEMPLATE		
	AREAS		
	AREAS CHECKED		

ORIGINAL SURVEY		BY	DATE
NOTE BOOK NO.	SURVEYED		
	PLOTTED		
	TEMPLATE		
	AREAS		
	AREAS CHECKED		

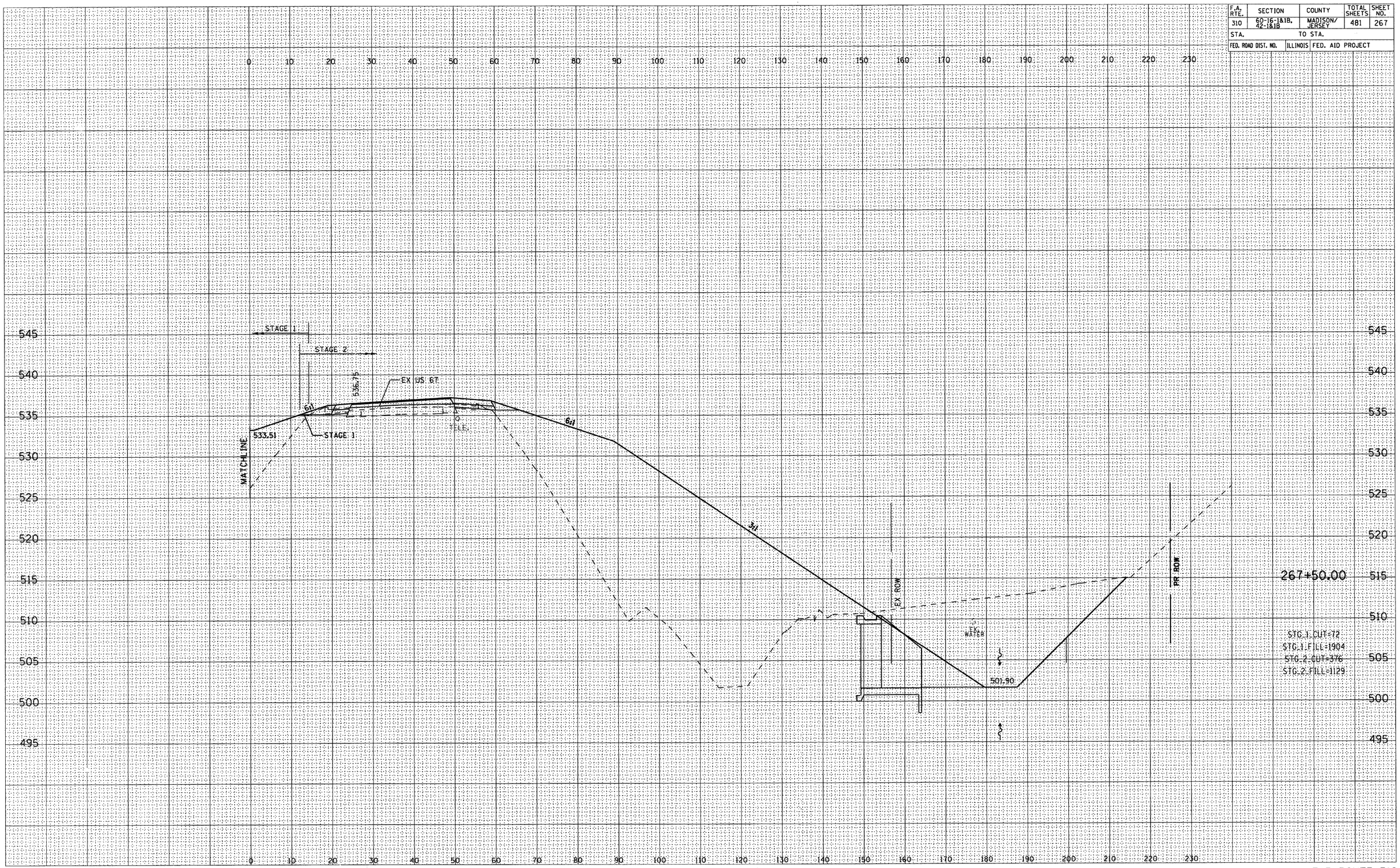

FAP ROUTE 310

F.A. RTE.	SECTION	COUNTY	TOTAL SHEETS	SHEET NO.
310	60-16-1&1B, 42-1&1B	MADISON/ JERSEY	481	268
STA.		TO STA.		
FED. ROAD DIST. NO.	ILLINOIS	FED. AID PROJECT		

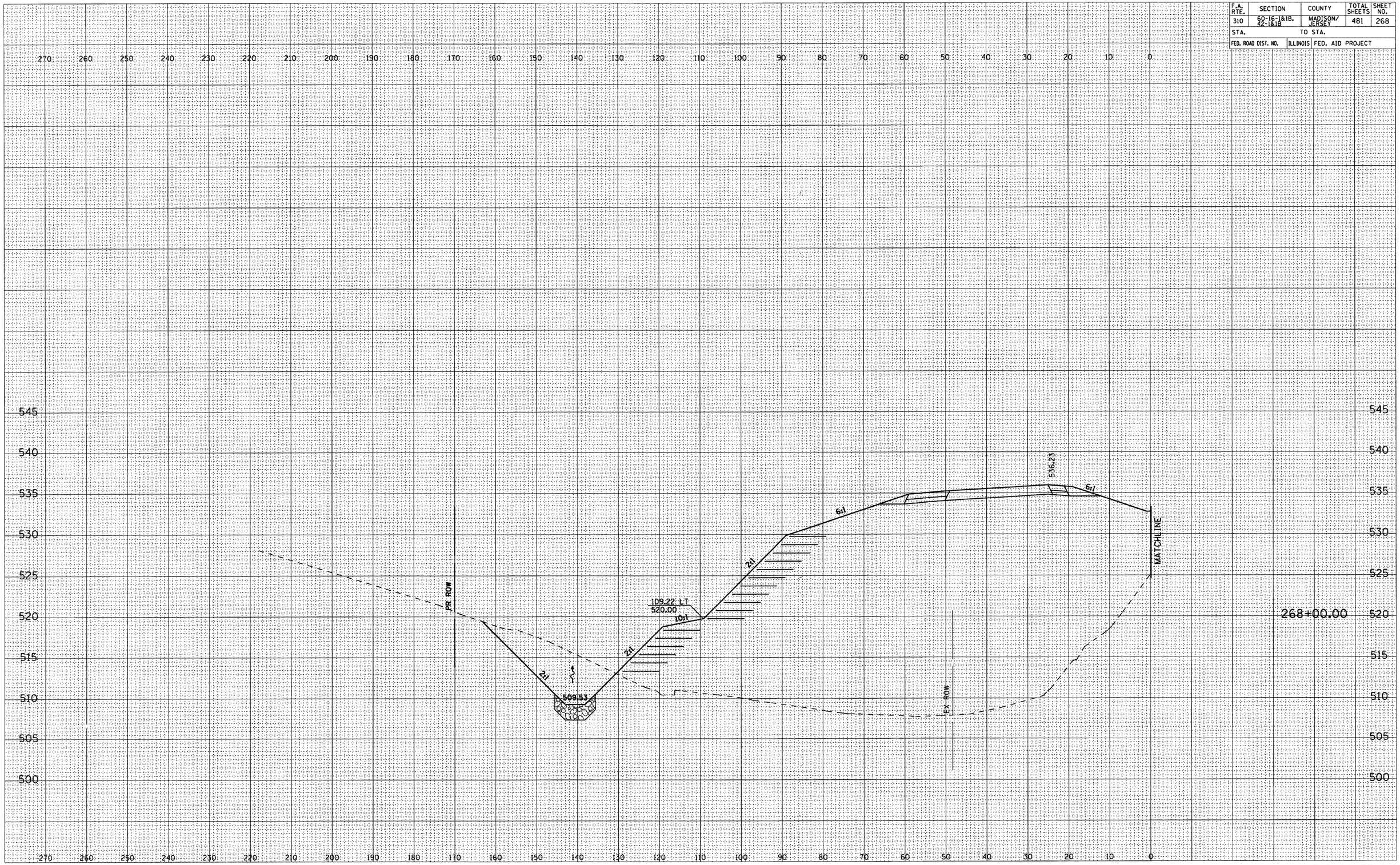

FAP ROUTE 310

FINAL SURVEY	BY	DATE
SURVEYED		
PLOTTED		
TEMPLATE		
AREAS		
AREAS CHECKED		
NOTE BOOK NO.		

ORIGINAL SURVEY	BY	DATE
SURVEYED		
PLOTTED		
TEMPLATE		
AREAS		
AREAS CHECKED		
NOTE BOOK NO.		

F.A. RTE.	SECTION	COUNTY	TOTAL SHEETS	SHEET NO.
310	60-16-1&1B, 42-1&1B	MADISON/ JERSEY	481	269
STA.		TO STA.		
FED. ROAD DIST. NO.	ILLINOIS	FED. AID PROJECT		

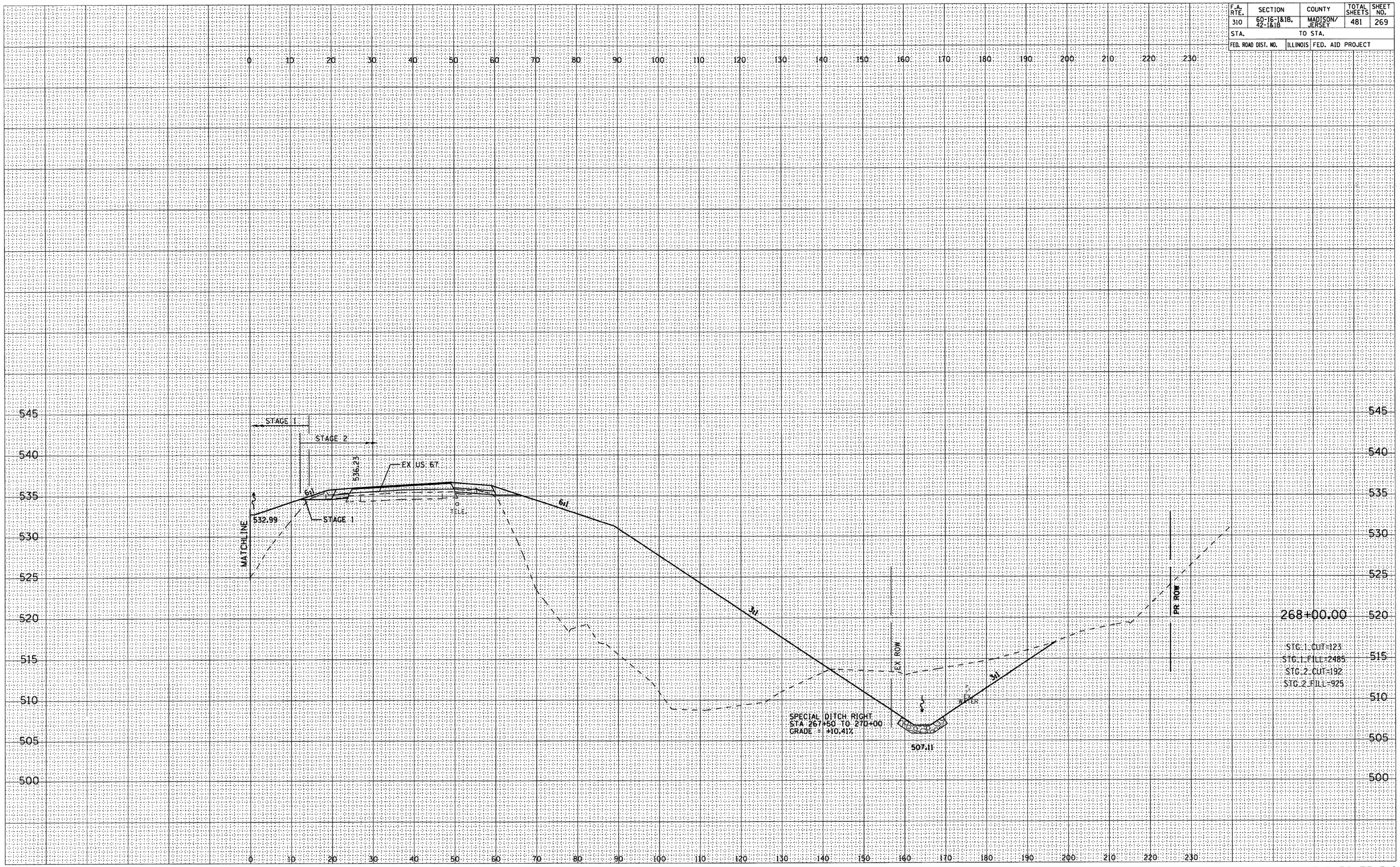

FINAL SURVEY	BY	DATE
SURVEYED		
PLOTTED		
TEMPLATE		
AREAS		
AREAS CHECKED		
NOTE BOOK NO.		

ORIGINAL SURVEY	BY	DATE
SURVEYED		
PLOTTED		
TEMPLATE		
AREAS		
AREAS CHECKED		
NOTE BOOK NO.		

FAP ROUTE 310

F.A. RTE.	SECTION	COUNTY	TOTAL SHEETS	SHEET NO.
310	60-16-1&1B, 42-1&1B	MADISON/ JERSEY	481	270
STA.		TO STA.		
FED. ROAD DIST. NO.	ILLINOIS	FED. AID PROJECT		

FINAL SURVEY	BY	DATE
SURVEYED		
PLOTTED		
TEMPLATE		
AREAS		
AREAS CHECKED		
NOTE BOOK NO.		

ORIGINAL SURVEY	BY	DATE
SURVEYED		
PLOTTED		
TEMPLATE		
AREAS		
AREAS CHECKED		
NOTE BOOK NO.		

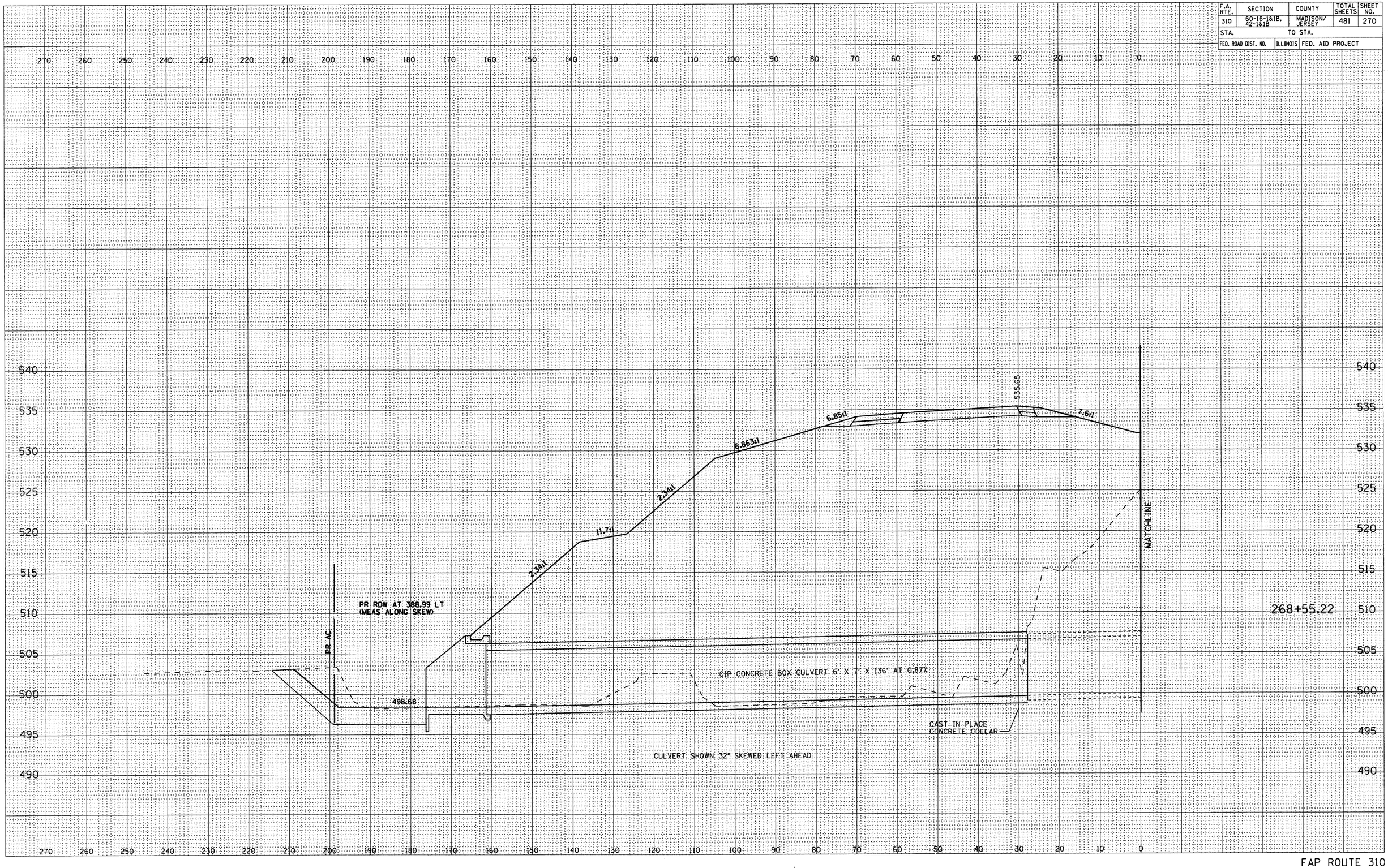

FAP ROUTE 310

F.A. RTE.	SECTION	COUNTY	TOTAL SHEETS	SHEET NO.
310	60-16-1&1B, 42-1&1B	MADISON/ JERSEY	481	271
STA.		TO STA.		
FED. ROAD DIST. NO.	ILLINOIS	FED. AID PROJECT		

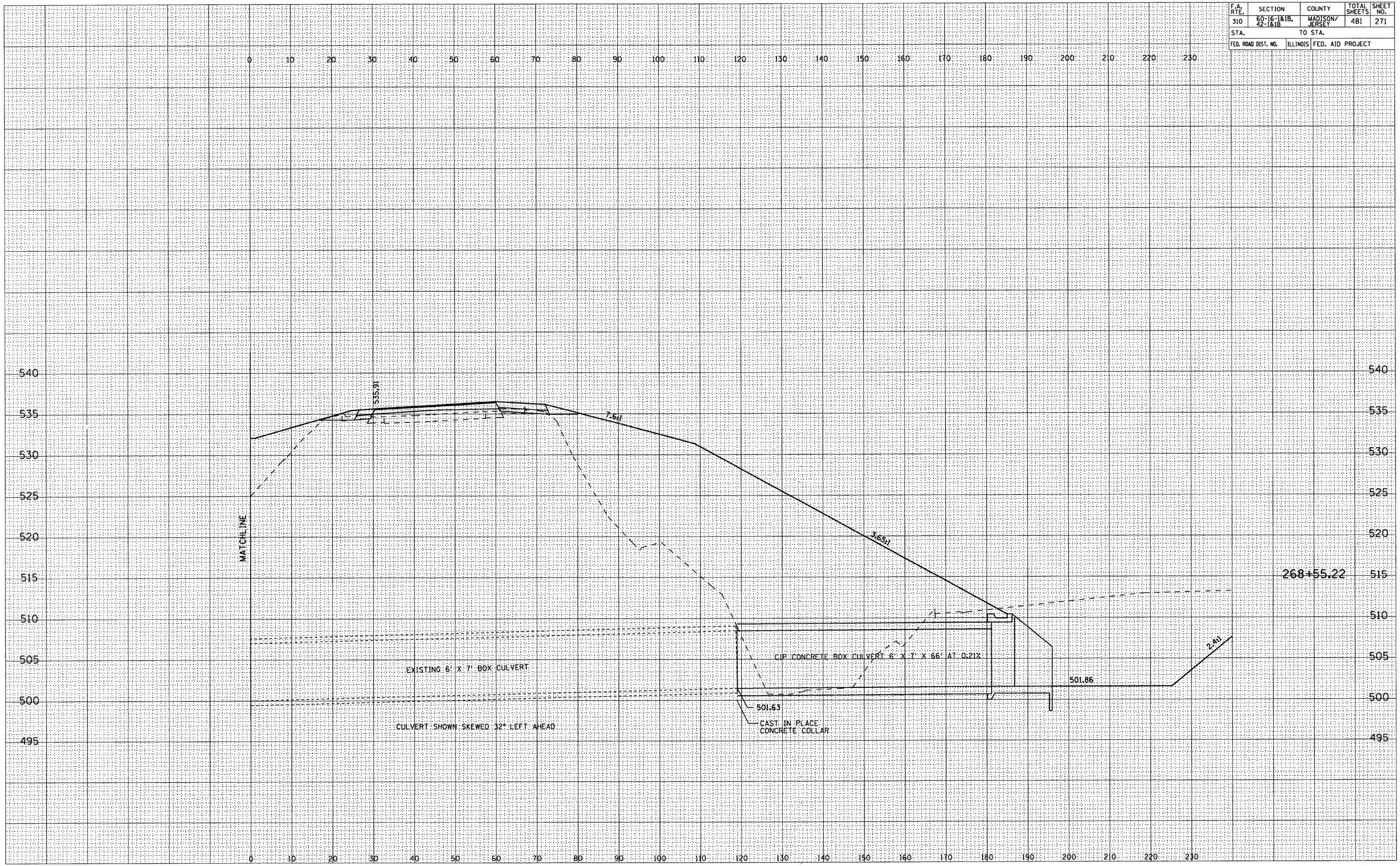

FINAL SURVEY	BY	DATE
SURVEYED		
PLOTTED		
TEMPLATE		
AREAS		
AREAS CHECKED		
NOTE BOOK NO.		

ORIGINAL SURVEY	BY	DATE
SURVEYED		
PLOTTED		
TEMPLATE		
AREAS		
AREAS CHECKED		
NOTE BOOK NO.		

F.A. RTE.	SECTION	COUNTY	TOTAL SHEETS	SHEET NO.
310	60-16-1&1B, 42-1&1B	MADISON/ JERSEY	481	272
STA.		TO STA.		
FED. ROAD DIST. NO.	ILLINOIS	FED. AID PROJECT		

FINAL SURVEY	BY	DATE
SURVEYED		
PLOTTED		
TEMPLATE		
AREAS		
AREAS CHECKED		
NOTE BOOK NO.		

ORIGINAL SURVEY	BY	DATE
SURVEYED		
PLOTTED		
TEMPLATE		
AREAS		
AREAS CHECKED		
NOTE BOOK NO.		

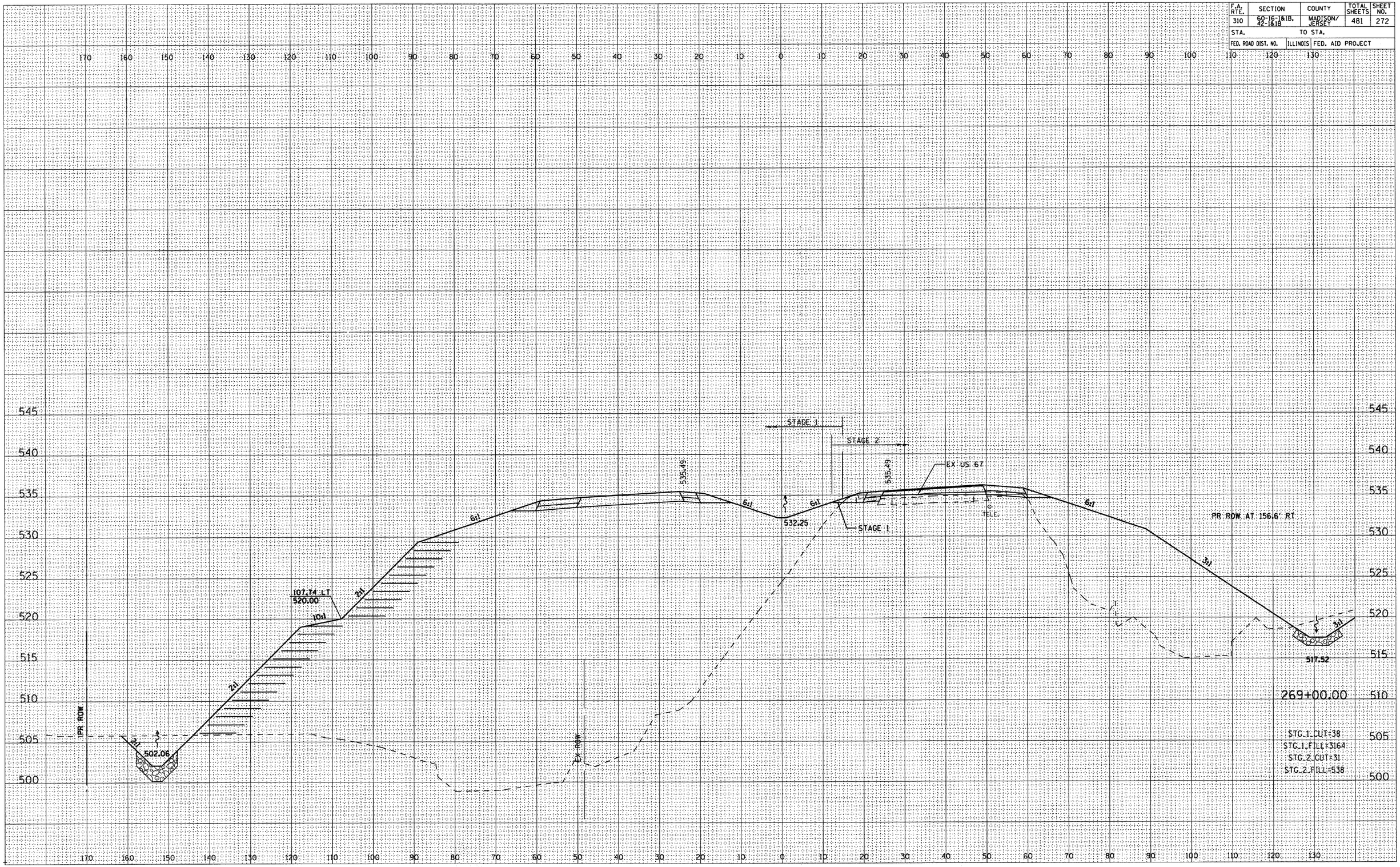

F.A. RTE.	SECTION	COUNTY	TOTAL SHEETS	SHEET NO.
310	60-16-1&1B, 42-1&1B	MADISON/ JERSEY	481	273
STA.		TO STA.		
FED. ROAD DIST. NO.	ILLINOIS	FED. AID PROJECT		

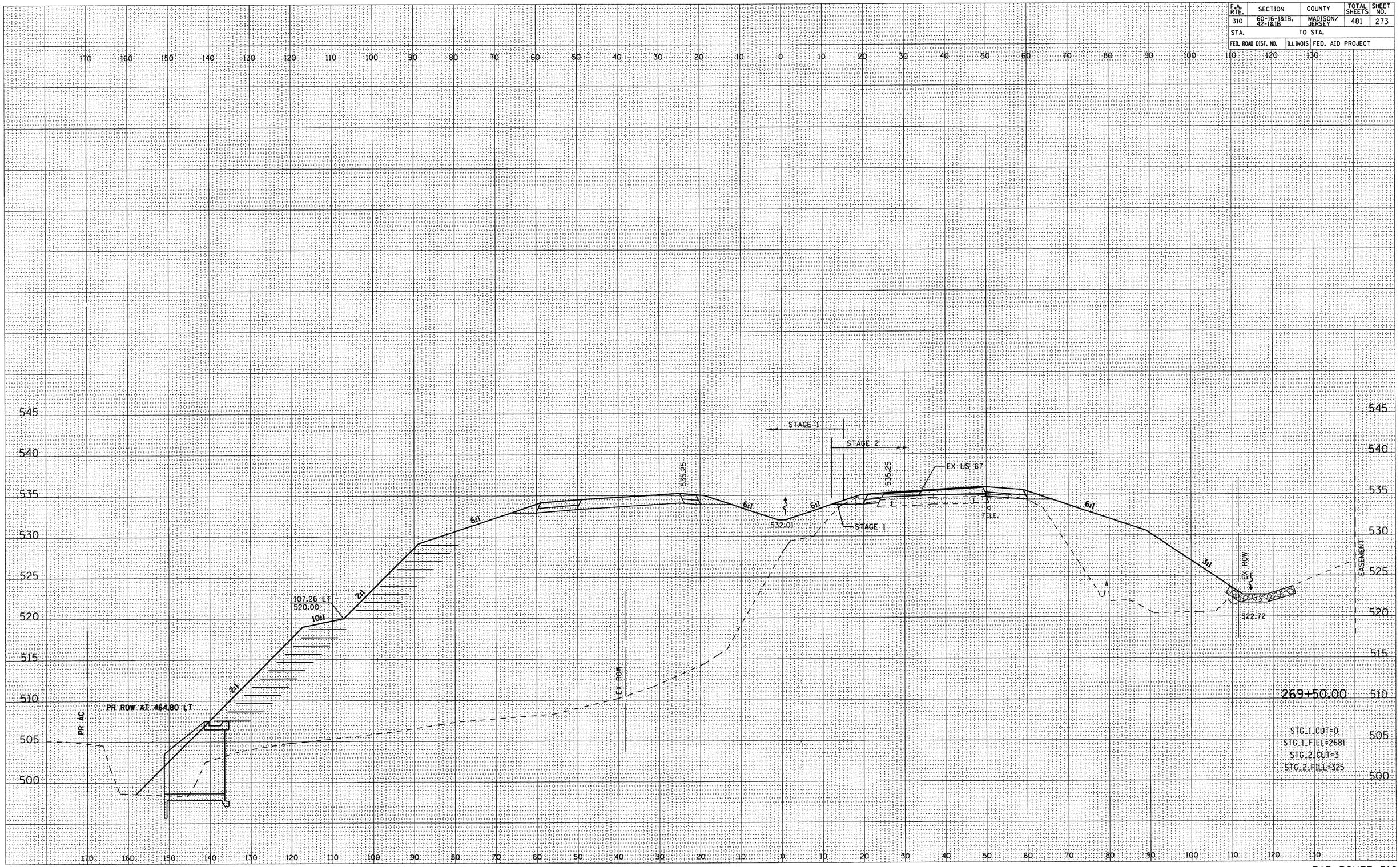

FINAL SURVEY	BY	DATE
SURVEYED		
PLOTTED		
TEMPLATE		
AREAS		
AREAS CHECKED		
NOTE BOOK NO.		

ORIGINAL SURVEY	BY	DATE
SURVEYED		
PLOTTED		
TEMPLATE		
AREAS		
AREAS CHECKED		
NOTE BOOK NO.		

F.A. RTE.	SECTION	COUNTY	TOTAL SHEETS	SHEET NO.
310	60-16-1&1B, 42-1&1B	MADISON/ JERSEY	481	274
STA.		TO STA.		
FED. ROAD DIST. NO.	ILLINOIS	FED. AID PROJECT		

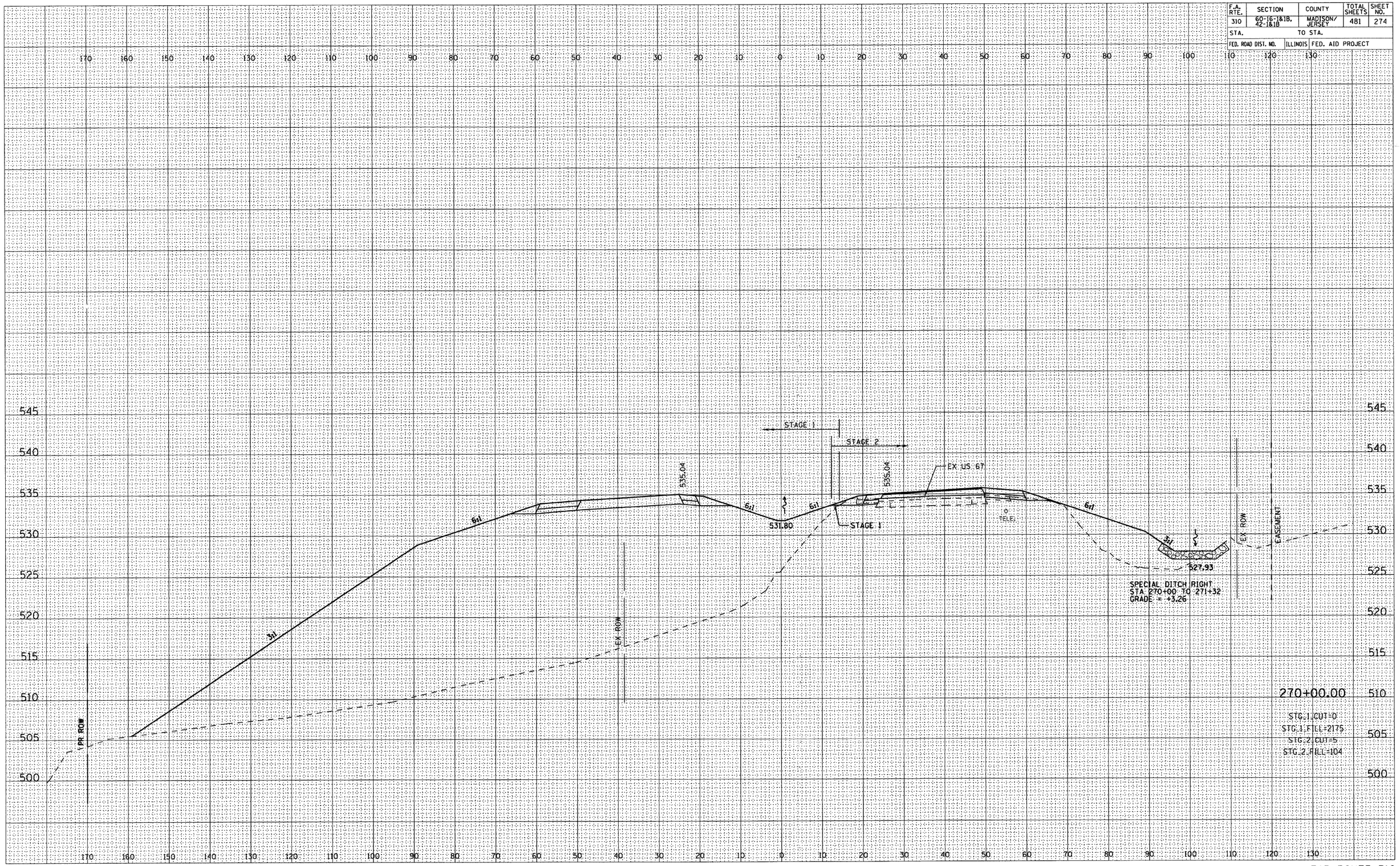

FINAL SURVEY	BY	DATE
NOTE BOOK	SURVEYED	
NO.	PLOTTED	
	TEMPLATE	
	AREAS	
	AREAS CHECKED	

ORIGINAL SURVEY	BY	DATE
NOTE BOOK	SURVEYED	
NO.	PLOTTED	
	TEMPLATE	
	AREAS	
	AREAS CHECKED	

F.A. RTE.	SECTION	COUNTY	TOTAL SHEETS	SHEET NO.
310	60-16-1&1B, 42-1&1B	MADISON/ JERSEY	481	275
STA.		TO STA.		
FED. ROAD DIST. NO.		ILLINOIS	FED. AID PROJECT	

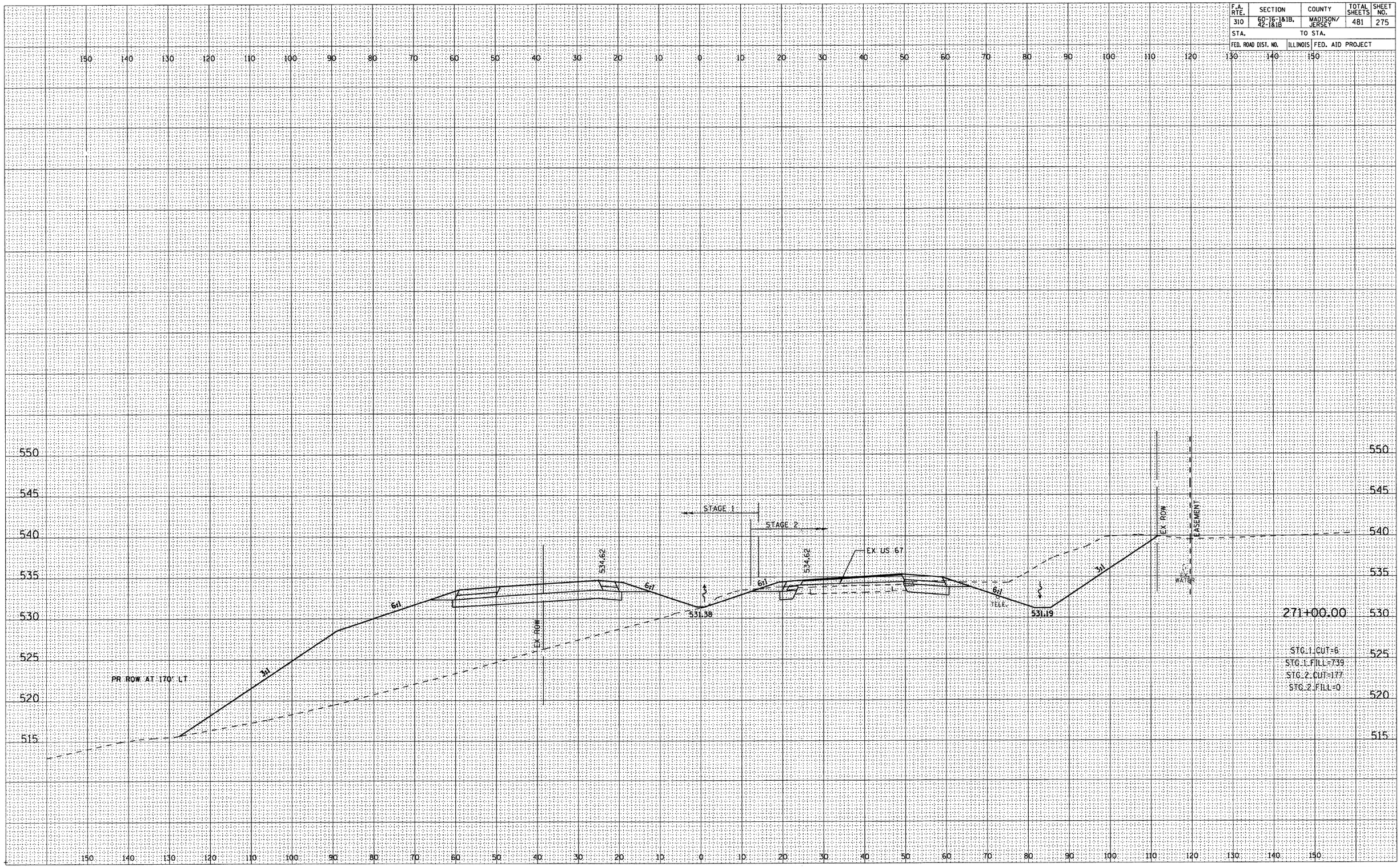

FINAL SURVEY	BY	DATE
SURVEYED		
PLOTTED		
TEMPLATE		
AREAS		
AREAS CHECKED		
NOTE BOOK NO.		

ORIGINAL SURVEY	BY	DATE
SURVEYED		
PLOTTED		
TEMPLATE		
AREAS		
AREAS CHECKED		
NOTE BOOK NO.		

F.A. RTE.	SECTION	COUNTY	TOTAL SHEETS	SHEET NO.
310	60-16-1&1B, 42-1&1B	MADISON/ JERSEY	481	276
STA.		TO STA.		
FED. ROAD DIST. NO.		ILLINOIS	FED. AID PROJECT	

FINAL SURVEY	BY	DATE
SURVEYED		
PLOTTED		
TEMPLATE		
AREAS		
AREAS CHECKED		
NOTE BOOK NO.		

ORIGINAL SURVEY	BY	DATE
SURVEYED		
PLOTTED		
TEMPLATE		
AREAS		
AREAS CHECKED		
NOTE BOOK NO.		

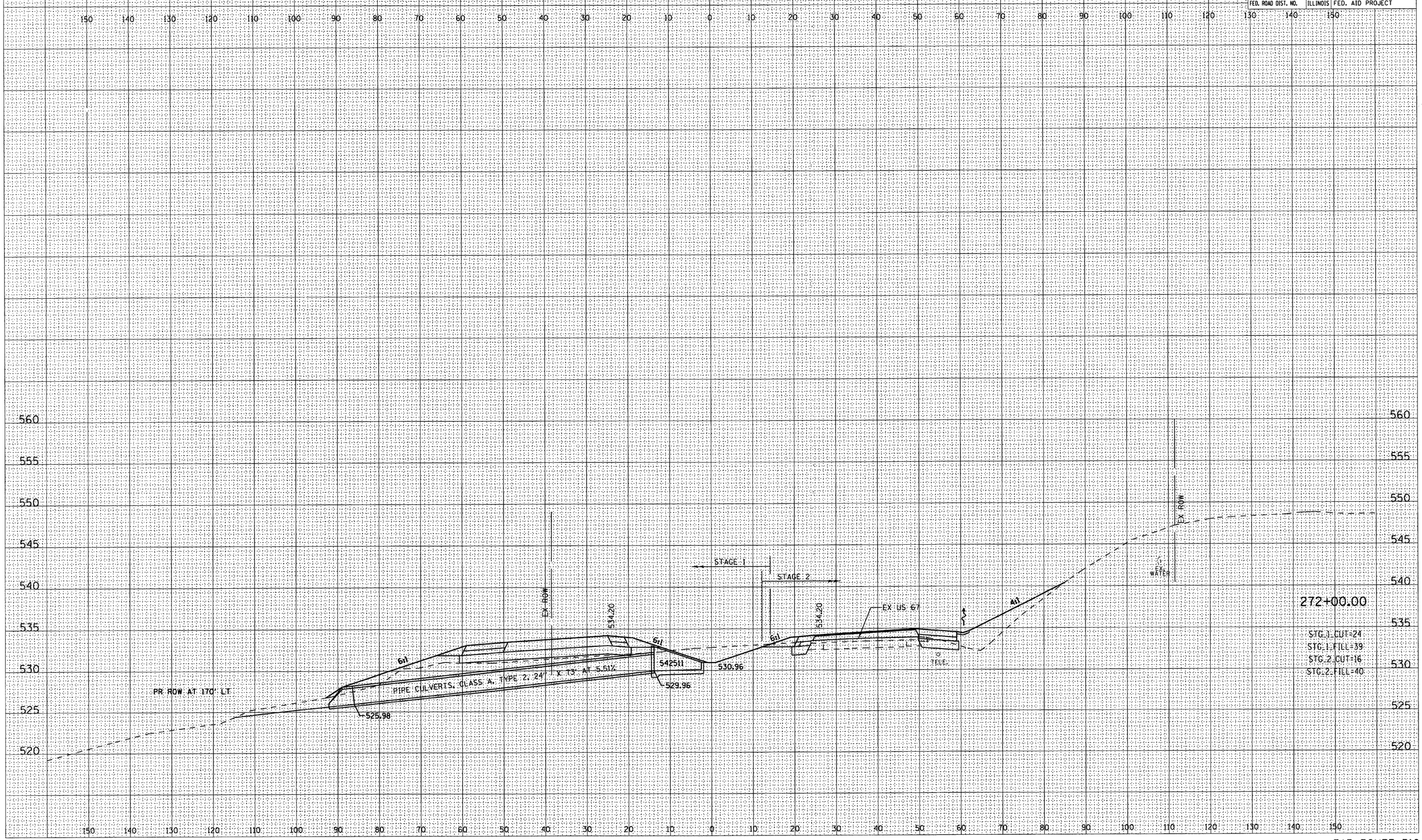

F.A. RTE.	SECTION	COUNTY	TOTAL SHEETS	SHEET NO.
310	60-16-1&1B, 42-1&1B	MADISON/ JERSEY	481	277
STA.		TO STA.		
FED. ROAD DIST. NO.	ILLINOIS	FED. AID PROJECT		

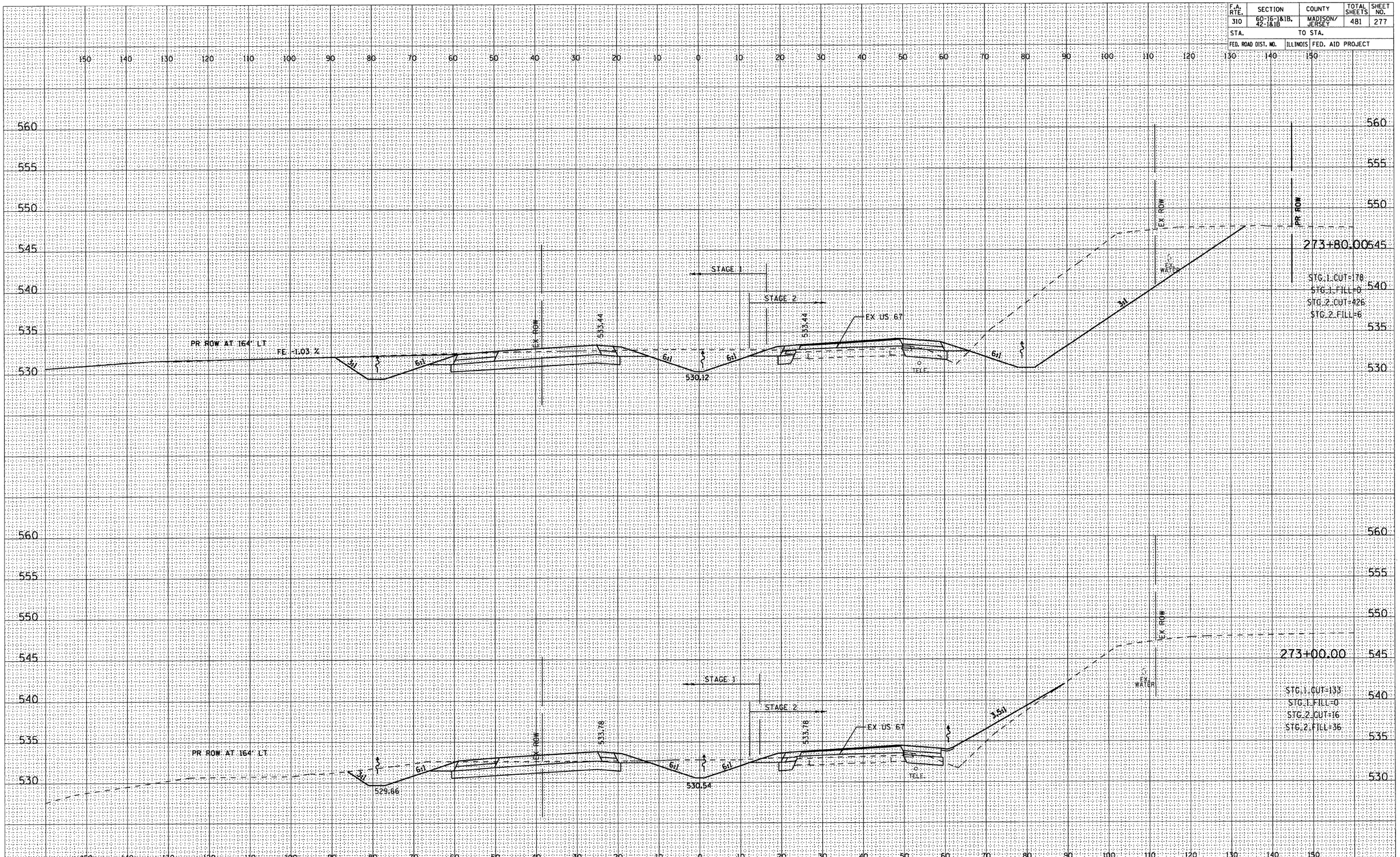

FINAL SURVEY	BY	DATE
SURVEYED		
PLOTTED		
TEMPLATE		
AREAS		
AREAS CHECKED		
NOTE BOOK NO.		

ORIGINAL SURVEY	BY	DATE
SURVEYED		
PLOTTED		
TEMPLATE		
AREAS		
AREAS CHECKED		
NOTE BOOK NO.		

FAP ROUTE 310

F.A. RTE.	SECTION	COUNTY	TOTAL SHEETS	SHEET NO.
310	60-16-1&1B, 42-1&1B	MADISON/ JERSEY	481	278
STA.		TO STA.		
FED. ROAD DIST. NO.	ILLINOIS	FED. AID PROJECT		

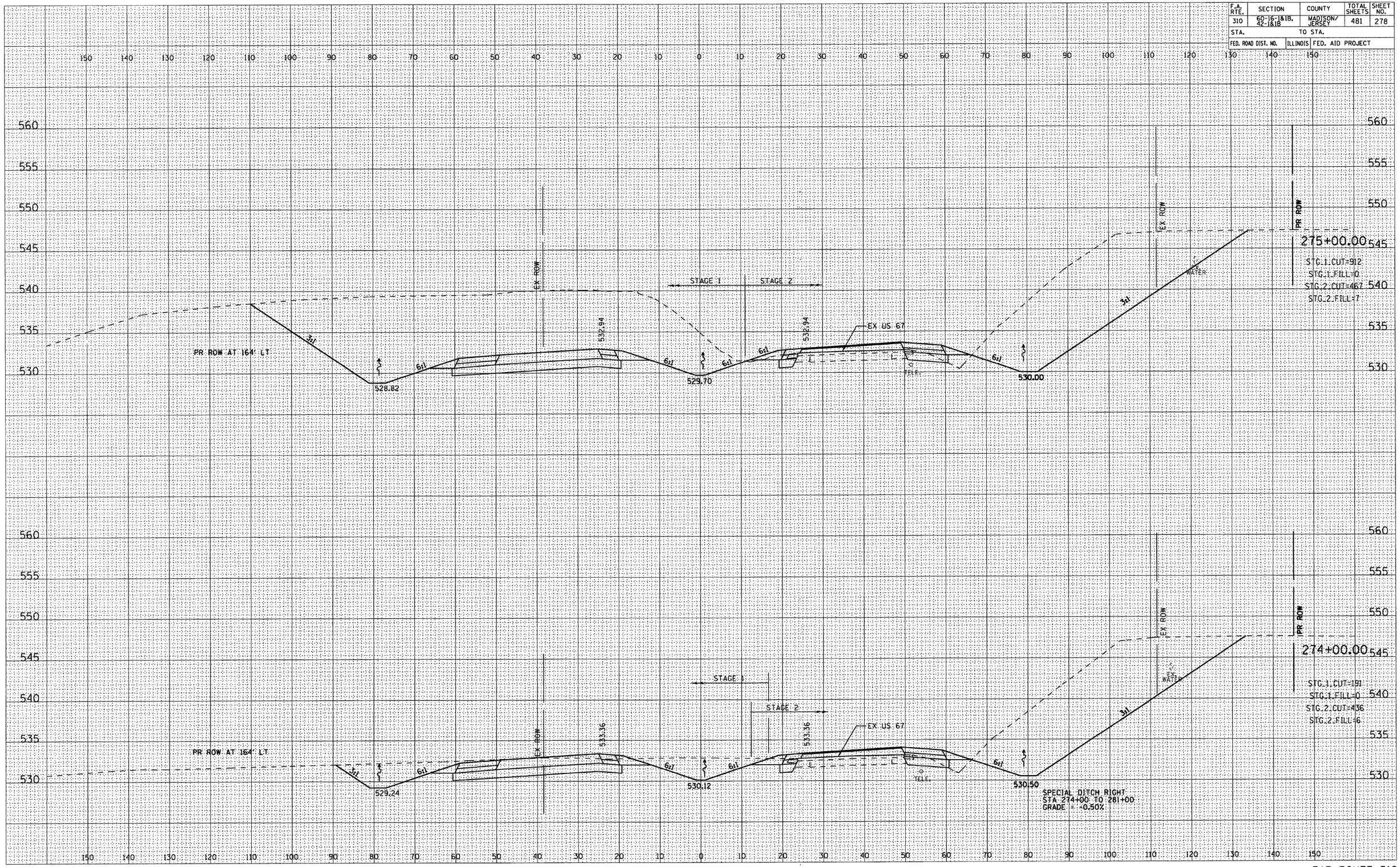

FINAL SURVEY	BY	DATE
SURVEYED		
PLOTTED		
TEMPLATE		
AREAS		
AREAS CHECKED		
NOTE BOOK NO.		

ORIGINAL SURVEY	BY	DATE
SURVEYED		
PLOTTED		
TEMPLATE		
AREAS		
AREAS CHECKED		
NOTE BOOK NO.		

F.A. RTE.	SECTION	COUNTY	TOTAL SHEETS	SHEET NO.
310	60-16-1&1B, 42-1&1B	MADISON/ JERSEY	481	279
STA.		TO STA.		
FED. ROAD DIST. NO.	ILLINOIS	FED. AID PROJECT		

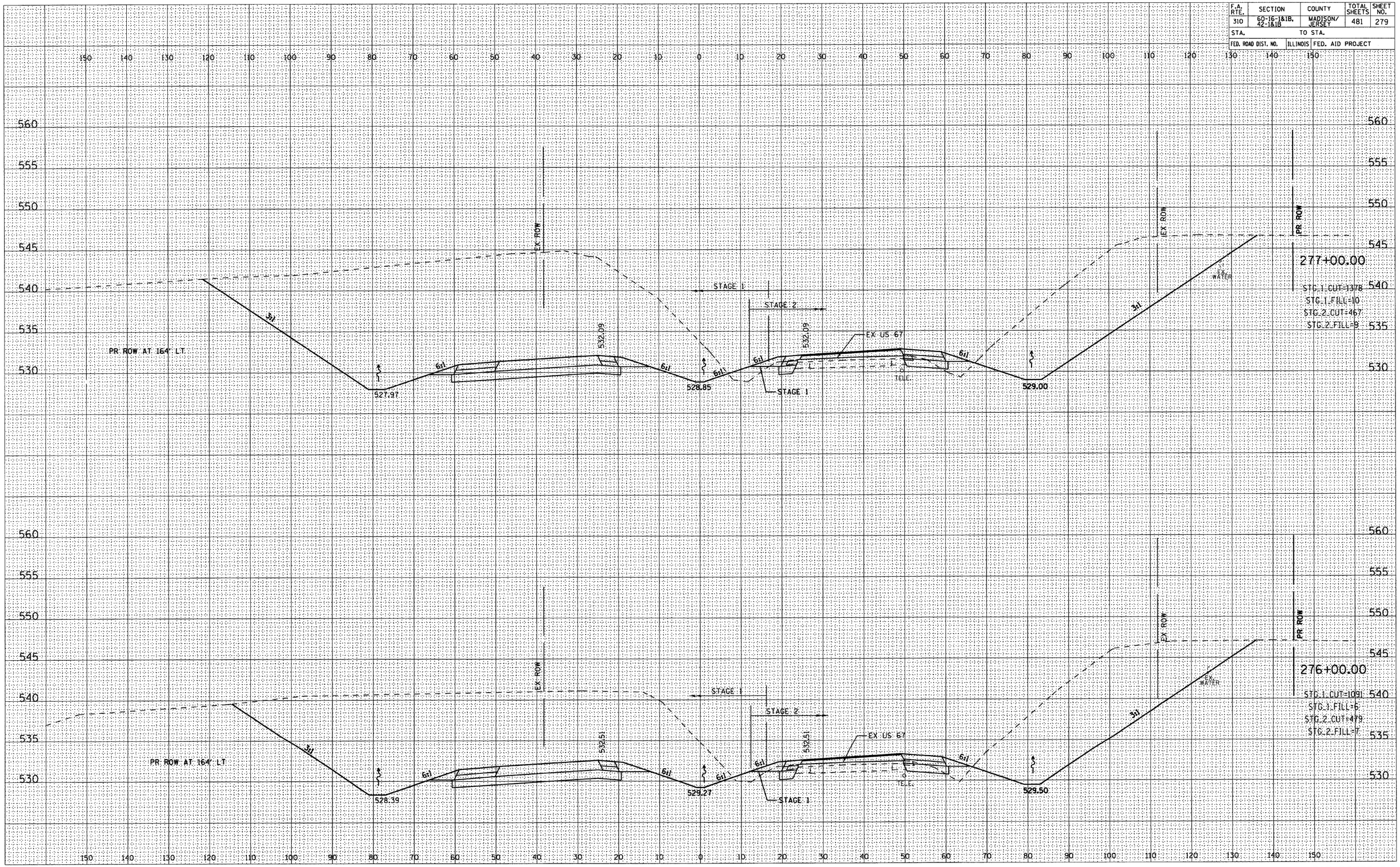

FINAL SURVEY	BY	DATE
NOTE BOOK NO.	SURVEYED	
	PLOTTED	
	TEMPLATE	
	AREAS	
	AREAS CHECKED	

ORIGINAL SURVEY	BY	DATE
NOTE BOOK NO.	SURVEYED	
	PLOTTED	
	TEMPLATE	
	AREAS	
	AREAS CHECKED	

FAP ROUTE 310

F.A. RTE.	SECTION	COUNTY	TOTAL SHEETS	SHEET NO.
310	60-16-1&1B, 42-1&1B	MADISON/ JERSEY	481	280
STA.		TO STA.		
FED. ROAD DIST. NO.	ILLINOIS	FED. AID PROJECT		

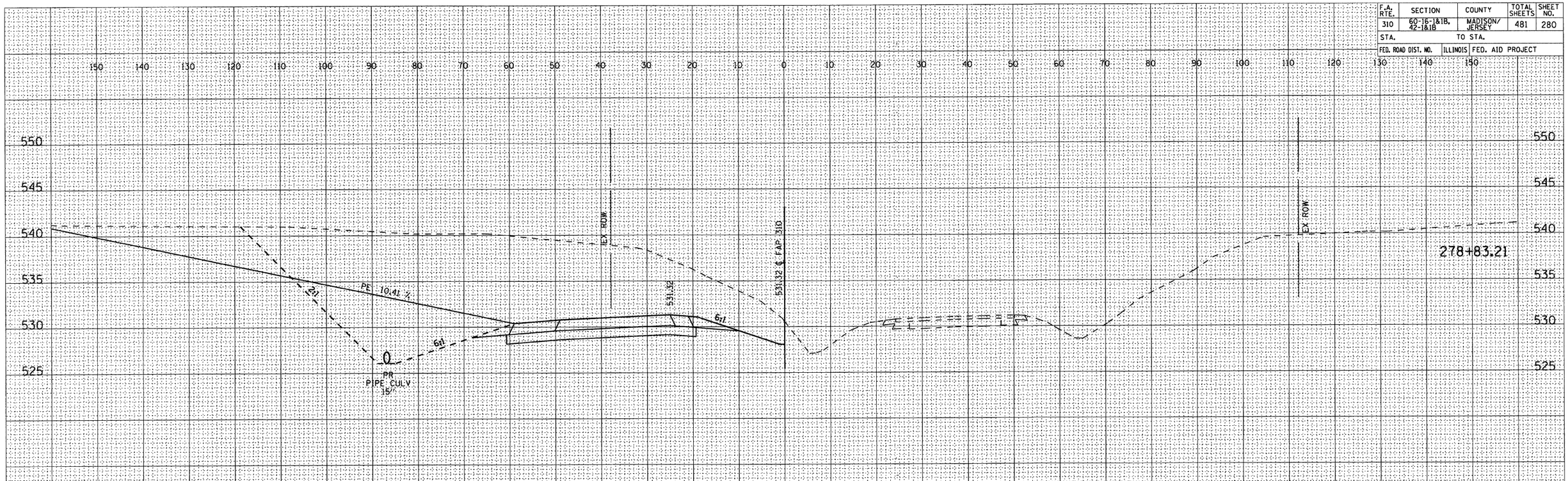

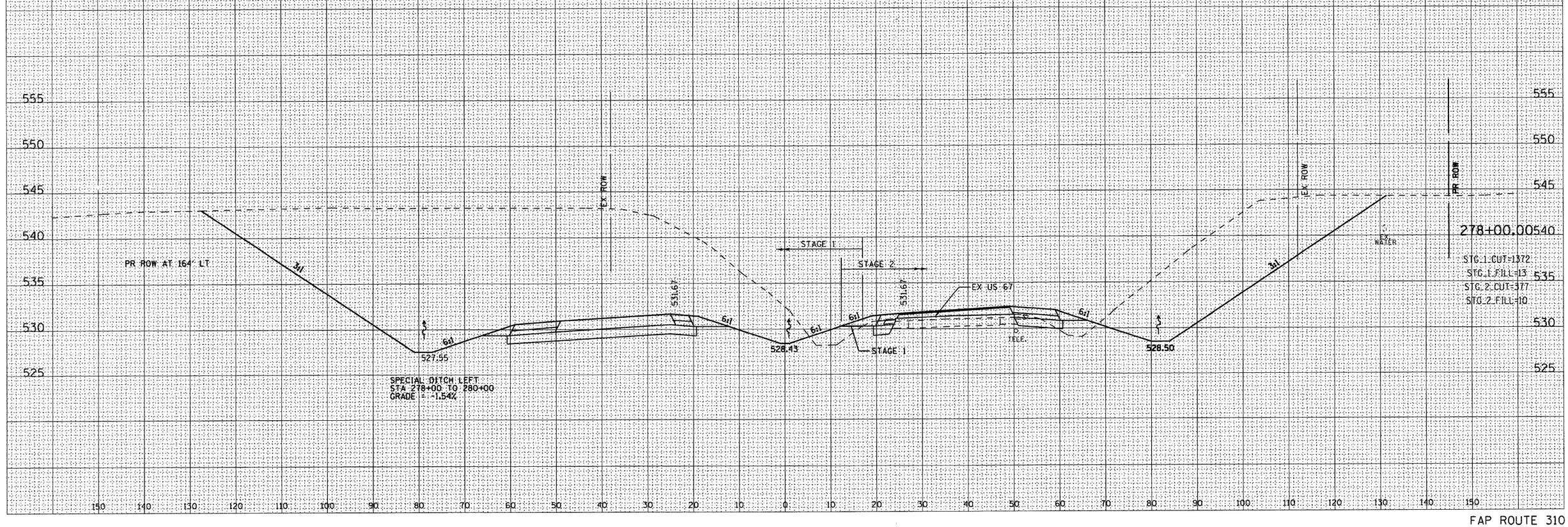

FINAL SURVEY	BY	DATE
SURVEYED		
PLOTTED		
TEMPLATE		
AREAS		
AREAS CHECKED		
NOTE BOOK NO.		

ORIGINAL SURVEY	BY	DATE
SURVEYED		
PLOTTED		
TEMPLATE		
AREAS		
AREAS CHECKED		
NOTE BOOK NO.		

FAP ROUTE 310

F.A. RTE.	SECTION	COUNTY	TOTAL SHEETS	SHEET NO.
310	60-16-1&1B, 42-1&1B	MADISON/ JERSEY	481	281
STA.		TO STA.		
FED. ROAD DIST. NO.		ILLINOIS	FED. AID PROJECT	

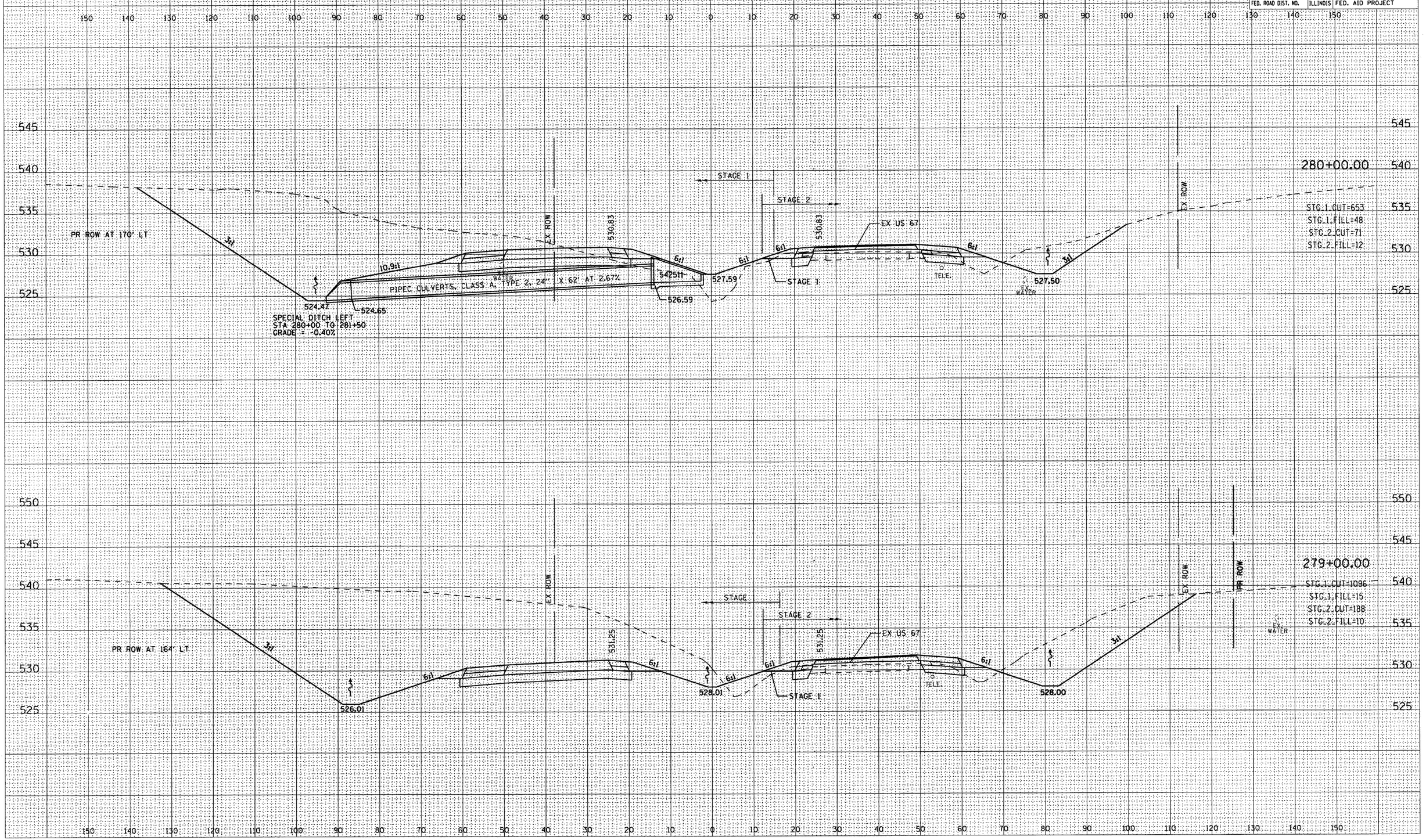

FAP ROUTE 310

F.A. RTE.	SECTION	COUNTY	TOTAL SHEETS	SHEET NO.
310	60-16-1&1B, 42-1&1B	MADISON/ JERSEY	481	282
STA.	TO STA.			
FED. ROAD DIST. NO.	ILLINOIS	FED. AID PROJECT		

FINAL SURVEY	BY	DATE
SURVEYED		
PLOTTED		
TEMPLATE		
AREAS		
AREAS CHECKED		
NOTE BOOK NO.		

ORIGINAL SURVEY	BY	DATE
SURVEYED		
PLOTTED		
TEMPLATE		
AREAS		
AREAS CHECKED		
NOTE BOOK NO.		

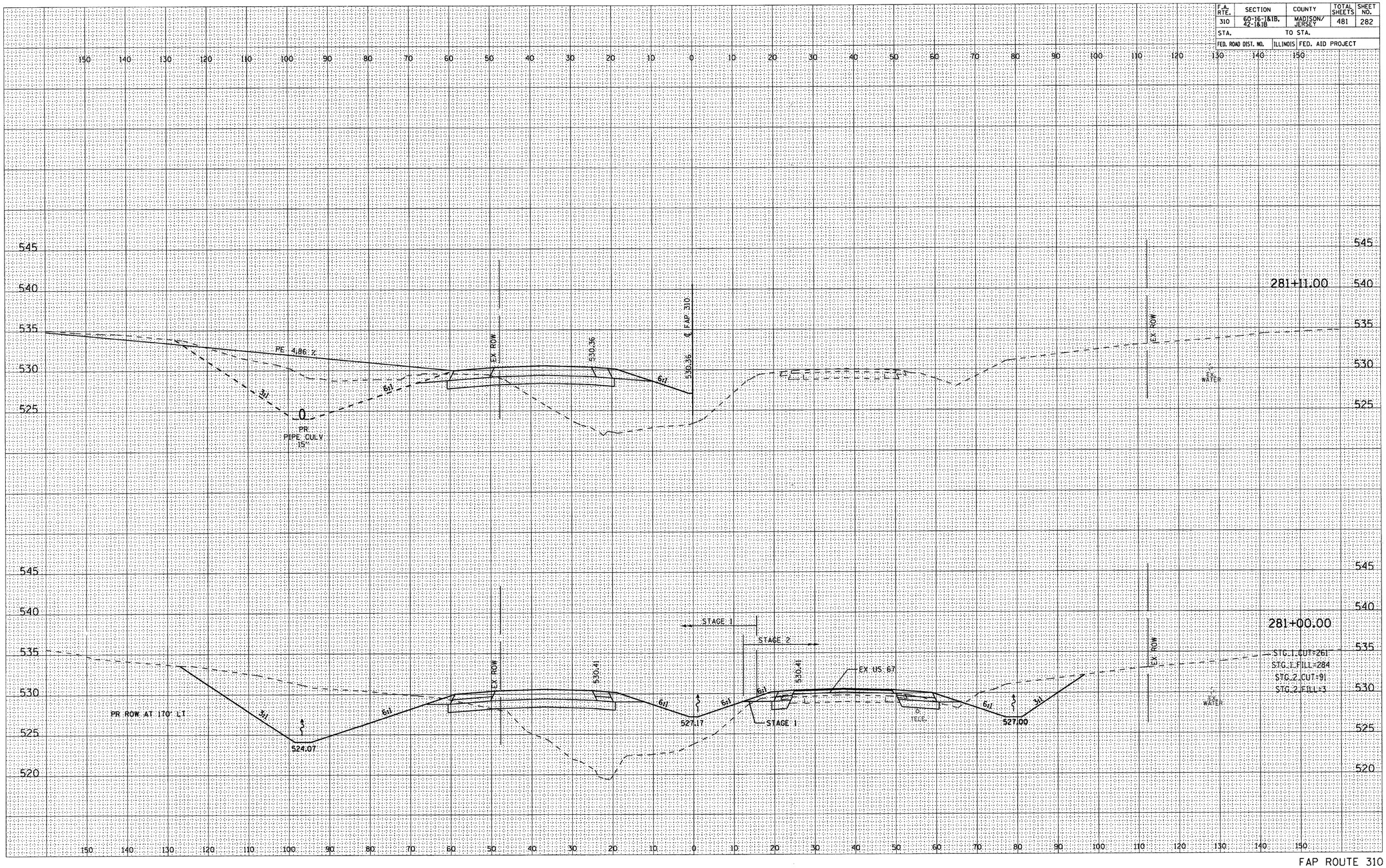

FAP ROUTE 310

F.A. RTE.	SECTION	COUNTY	TOTAL SHEETS	SHEET NO.
310	60-16-1&1B, 42-1&1B	MADISON/ JERSEY	481	283
STA.		TO STA.		
FED. ROAD DIST. NO.	ILLINOIS	FED. AID PROJECT		

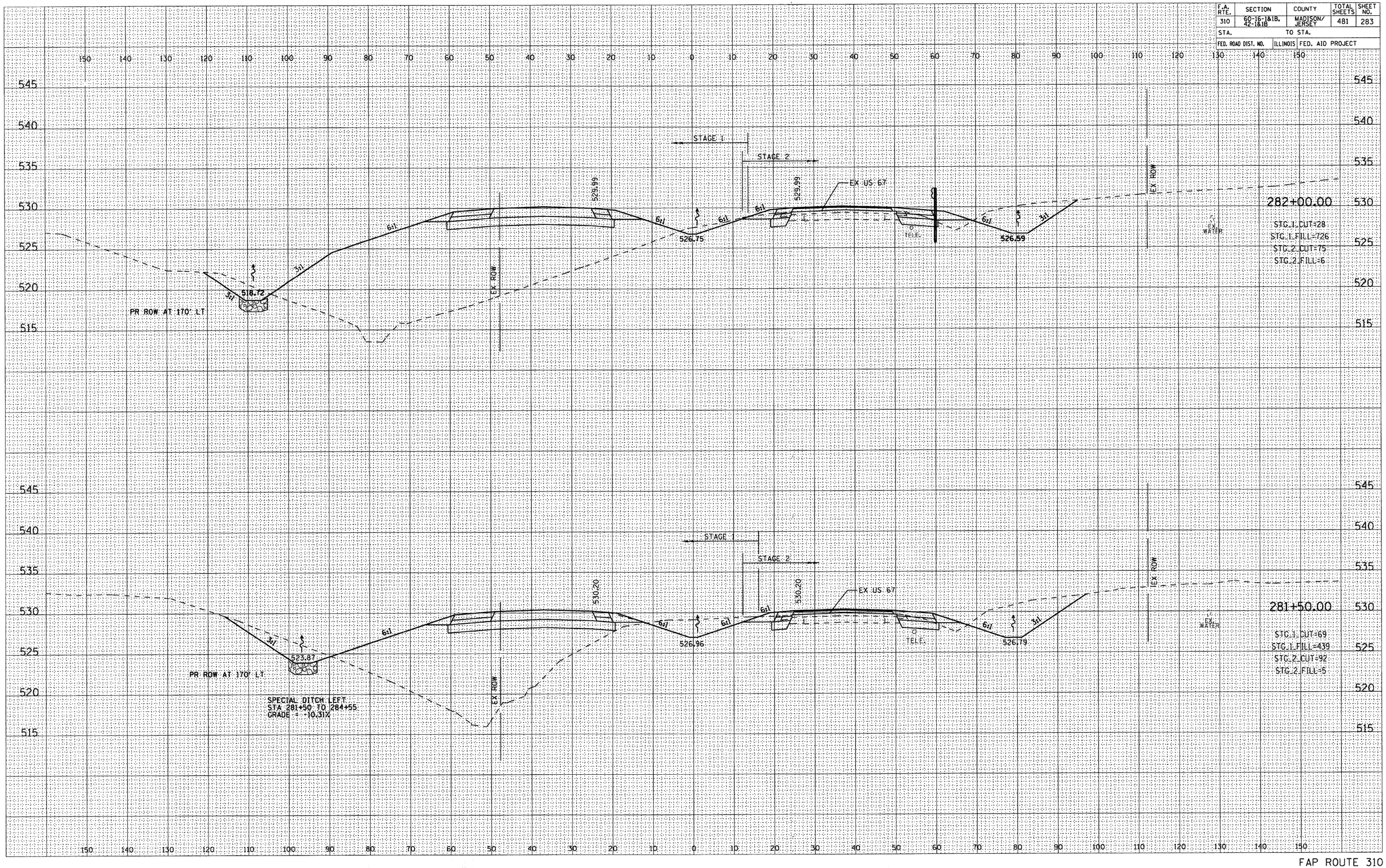

FINAL SURVEY		BY	DATE
NOTE BOOK NO.	SURVEYED		
	PLOTTED		
	TEMPLATE		
	AREAS		
	AREAS CHECKED		

ORIGINAL SURVEY		BY	DATE
NOTE BOOK NO.	SURVEYED		
	PLOTTED		
	TEMPLATE		
	AREAS		
	AREAS CHECKED		

F.A. RTE.	SECTION	COUNTY	TOTAL SHEETS	SHEET NO.
310	60-16-1&1B, 42-1&1B	MADISON/ JERSEY	481	284
STA.		TO STA.		
FED. ROAD DIST. NO.	ILLINOIS	FED. AID PROJECT		

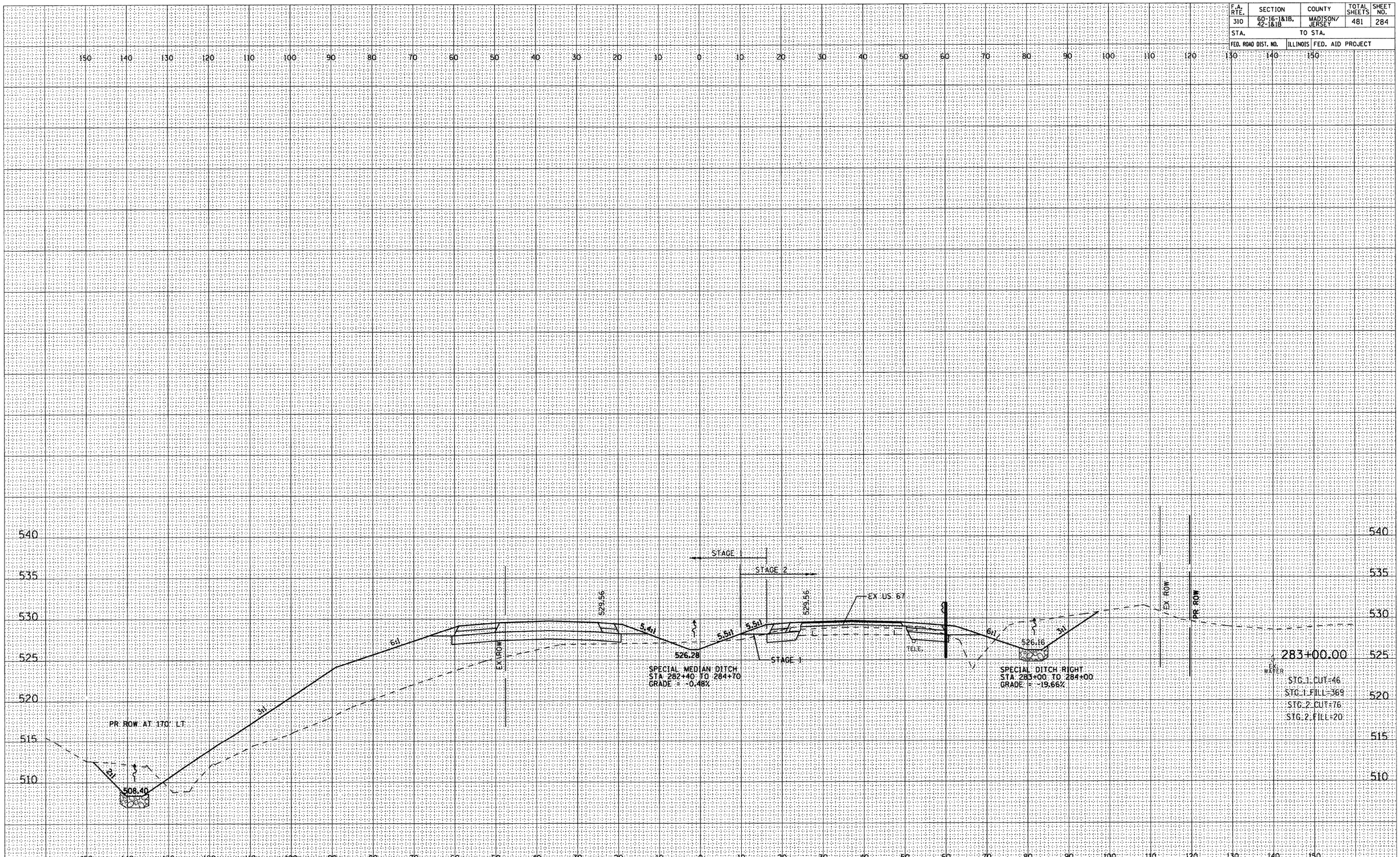

FINAL SURVEY	BY	DATE
SURVEYED		
PLOTTED		
TEMPLATE		
AREAS		
AREAS CHECKED		
NOTE BOOK NO.		

ORIGINAL SURVEY	BY	DATE
SURVEYED		
PLOTTED		
TEMPLATE		
AREAS		
AREAS CHECKED		
NOTE BOOK NO.		

FAP ROUTE 310

F.A. RTE.	SECTION	COUNTY	TOTAL SHEETS	SHEET NO.
310	60-16-1&1B, 42-1&1B	MADISON/ JERSEY	481	285
STA.		TO STA.		
FED. ROAD DIST. NO.	ILLINOIS	FED. AID PROJECT		

FINAL SURVEY	BY	DATE
SURVEYED		
PLOTTED		
TEMPLATE		
AREAS		
AREAS CHECKED		
NOTE BOOK NO.		

ORIGINAL SURVEY	BY	DATE
SURVEYED		
PLOTTED		
TEMPLATE		
AREAS		
AREAS CHECKED		
NOTE BOOK NO.		

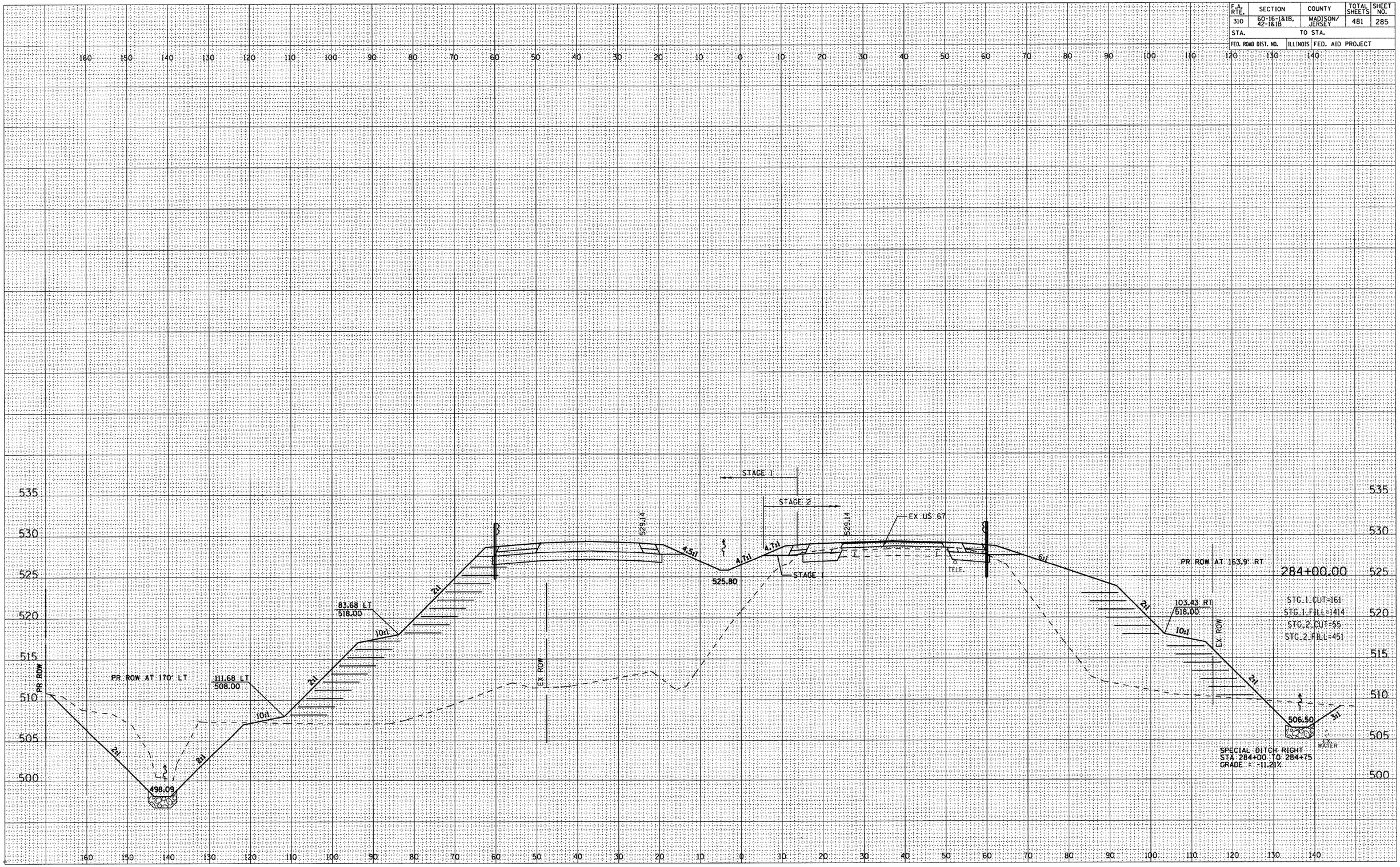

FAP ROUTE 310

F.A. RTE.	SECTION	COUNTY	TOTAL SHEETS	SHEET NO.
310	60-16-1&1B, 42-1&1B	MADISON/ JERSEY	481	286
STA.	TO STA.			
FED. ROAD DIST. NO.	ILLINOIS	FED. AID PROJECT		

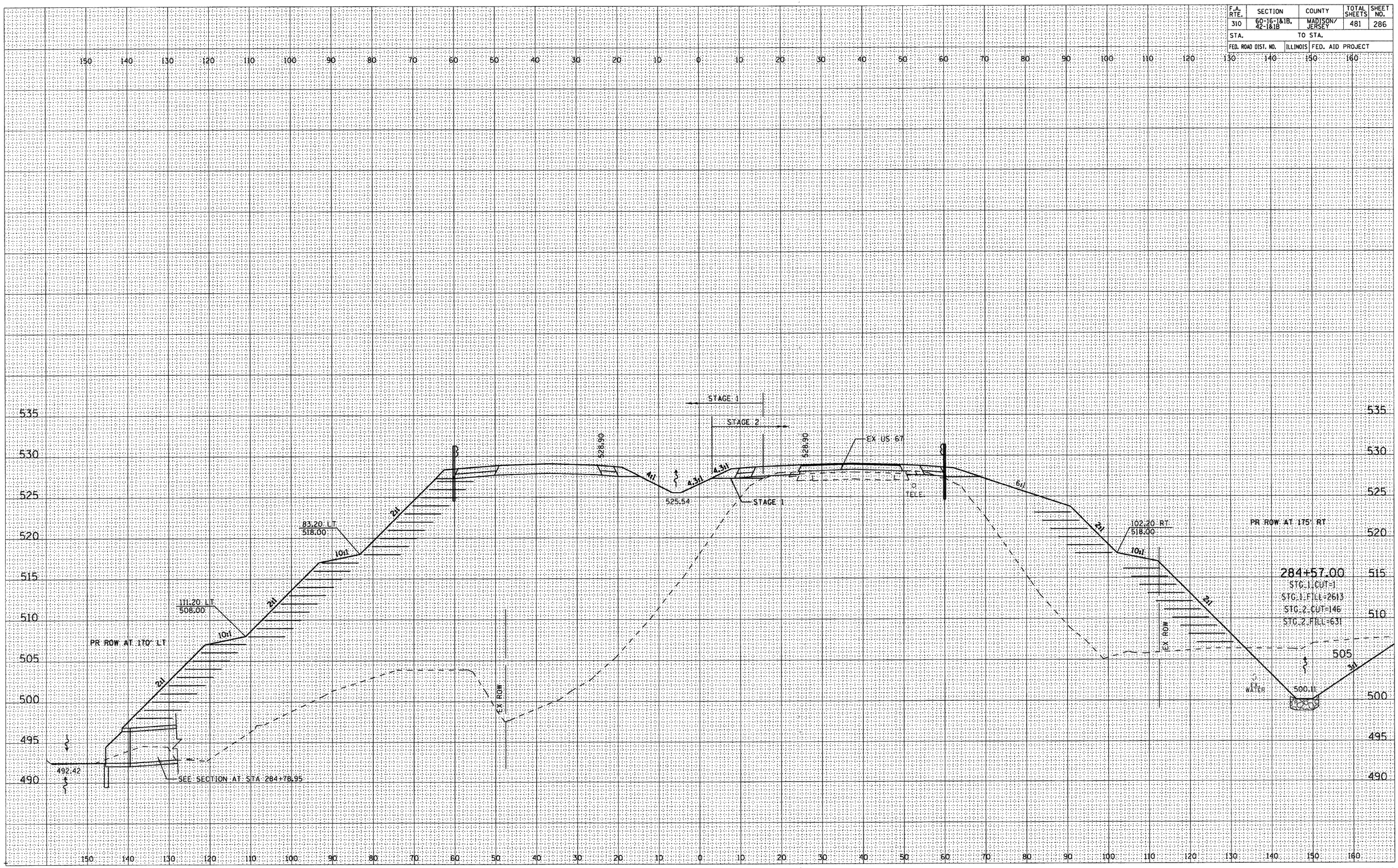

FINAL SURVEY	BY	DATE
SURVEYED		
PLOTTED		
TOPO. VERIFIED		
NOTE BOOK		
NO.	AREAS CHECKED	

ORIGINAL SURVEY	BY	DATE
SURVEYED		
PLOTTED		
TOPO. VERIFIED		
NOTE BOOK		
NO.	AREAS CHECKED	

F.A. RTE.	SECTION	COUNTY	TOTAL SHEETS	SHEET NO.
310	60-16-1&1B, 42-1&1B	MADISON/ JERSEY	481	287
STA.		TO STA.		
FED. ROAD DIST. NO.	ILLINOIS	FED. AID PROJECT		

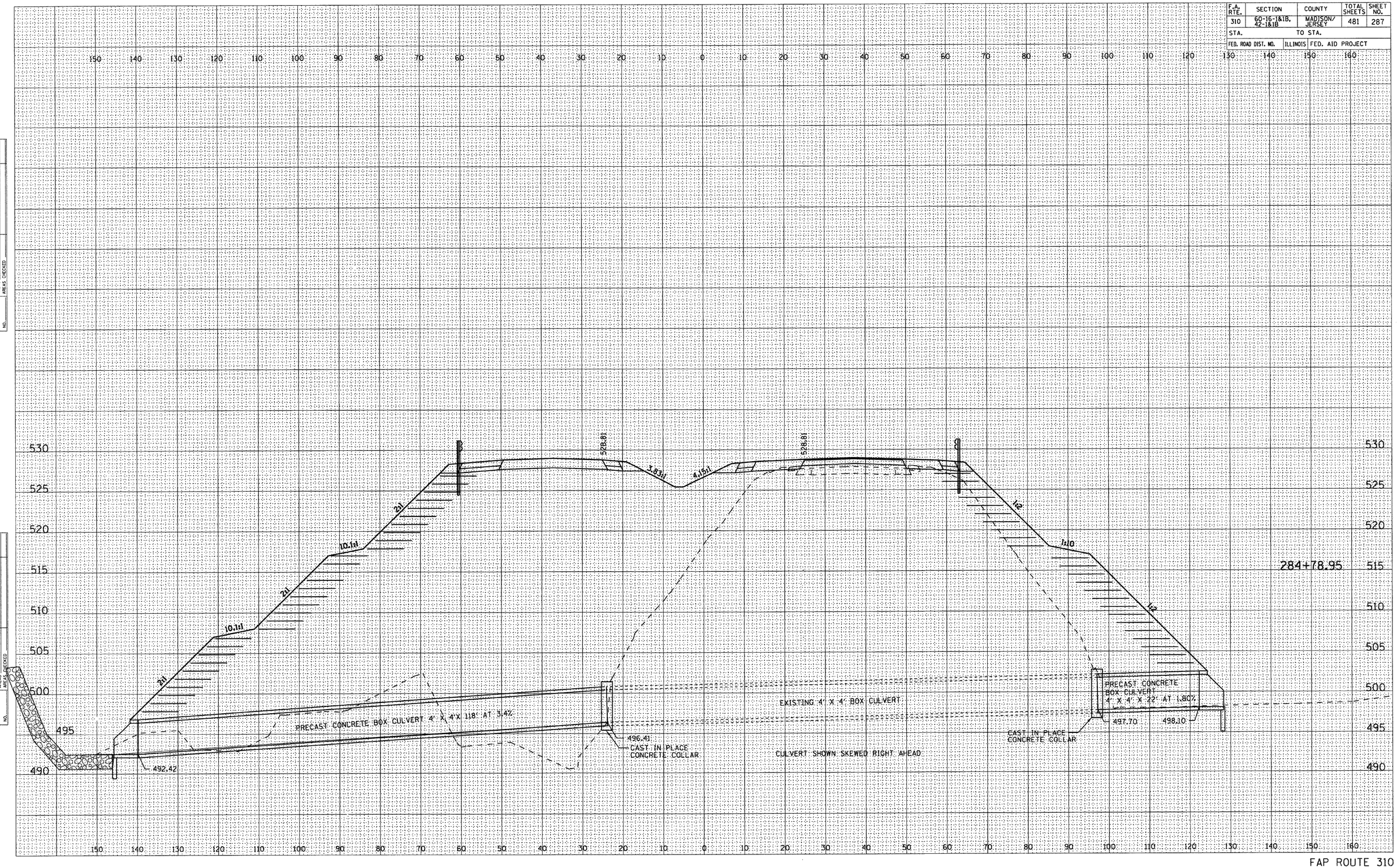

FINAL SURVEY	BY	DATE
SURVEYED		
PLOTTED		
TOPOGRAPHY		
AREAS		
AREAS CHECKED		
NOTE BOOK NO.		

ORIGINAL SURVEY	BY	DATE
SURVEYED		
PLOTTED		
TOPOGRAPHY		
AREAS		
AREAS CHECKED		
NOTE BOOK NO.		

F.A. RTE.	SECTION	COUNTY	TOTAL SHEETS	SHEET NO.
310	60-16-1&1B, 42-1&1B	MADISON/ JERSEY	481	288
STA.		TO STA.		
FED. ROAD DIST. NO.	ILLINOIS	FED. AID PROJECT		

FINAL SURVEY		BY	DATE
NOTE BOOK NO.	SURVEYED		
	PLOTTED		
	TEMPLATE		
	AREAS		
	AREAS CHECKED		

ORIGINAL SURVEY		BY	DATE
NOTE BOOK NO.	SURVEYED		
	PLOTTED		
	TEMPLATE		
	AREAS		
	AREAS CHECKED		

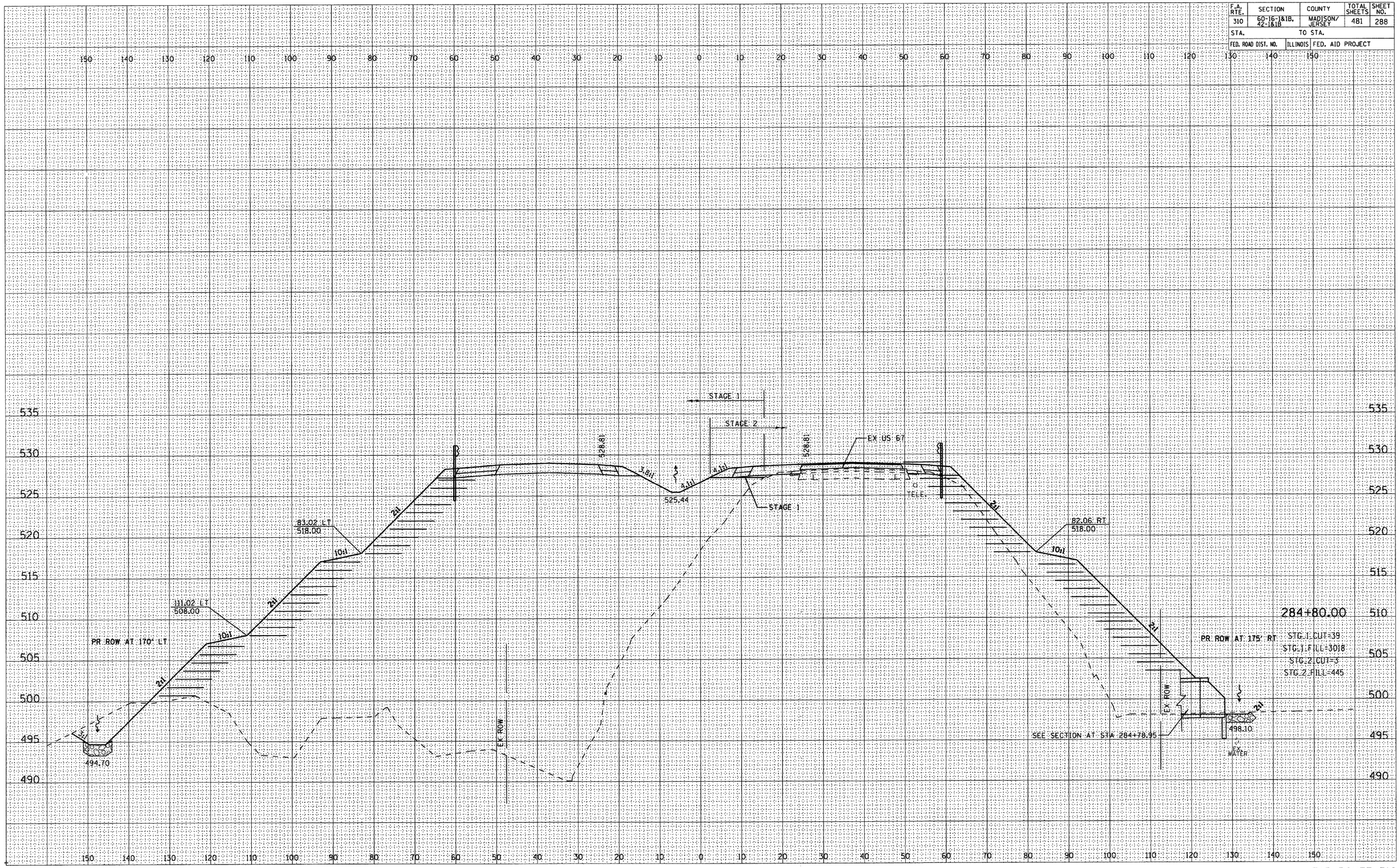

F.A. RTE.	SECTION	COUNTY	TOTAL SHEETS	SHEET NO.
310	60-16-1&1B, 42-1&1B	MADISON/ JERSEY	481	289
STA.		TO STA.		
FED. ROAD DIST. NO.	ILLINOIS	FED. AID PROJECT		

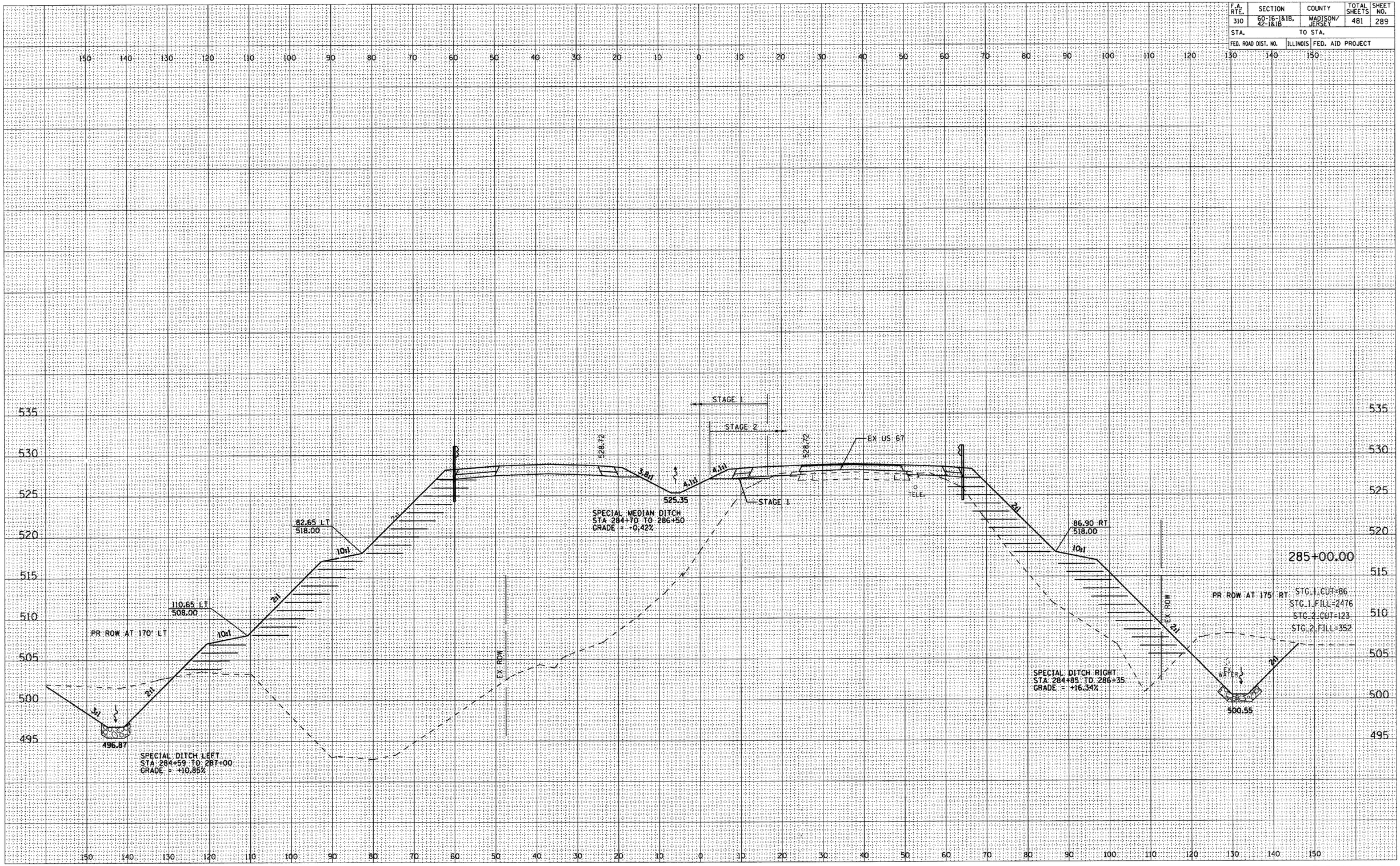

FINAL SURVEY	BY	DATE
SURVEYED		
PLOTTED		
TEMPLATE		
AREAS		
AREAS CHECKED		
NOTE BOOK NO.		

ORIGINAL SURVEY	BY	DATE
SURVEYED		
PLOTTED		
TEMPLATE		
AREAS		
AREAS CHECKED		
NOTE BOOK NO.		

F.A. RTE.	SECTION	COUNTY	TOTAL SHEETS	SHEET NO.
310	60-16-1&1B, 42-1&1B	MADISON/ JERSEY	481	290
STA.		TO STA.		
FED. ROAD DIST. NO.	ILLINOIS	FED. AID PROJECT		

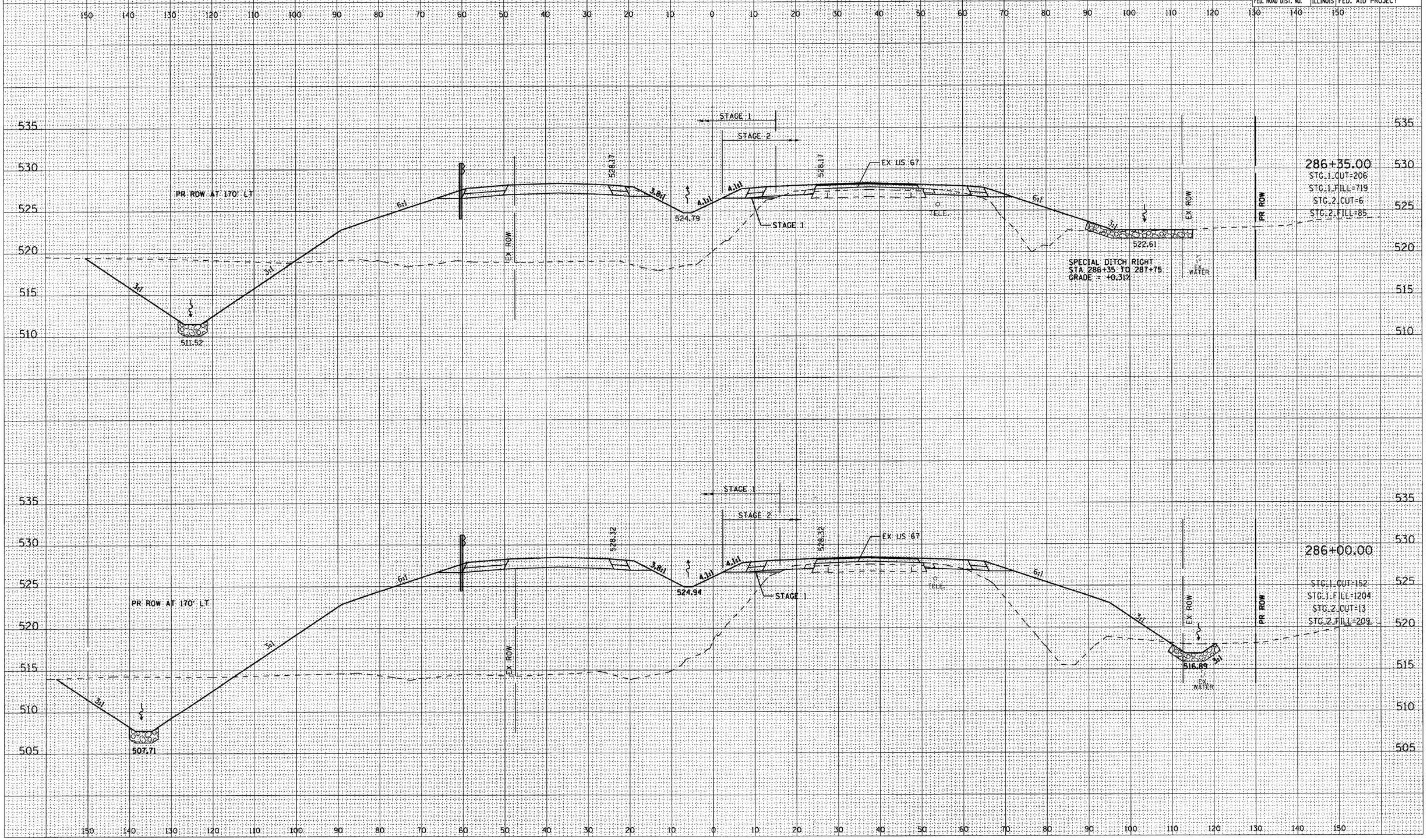

FINAL SURVEY	BY	DATE
SURVEYED		
PLOTTED		
TEMPLATE		
AREAS		
AREAS CHECKED		
NOTE BOOK NO.		

ORIGINAL SURVEY	BY	DATE
SURVEYED		
PLOTTED		
TEMPLATE		
AREAS		
AREAS CHECKED		
NOTE BOOK NO.		

F.A. RTE.	SECTION	COUNTY	TOTAL SHEETS	SHEET NO.
310	60-16-1&1B, 42-1&1B	MADISON/ JERSEY	481	291
STA.		TO STA.		
FED. ROAD DIST. NO.	ILLINOIS	FED. AID PROJECT		

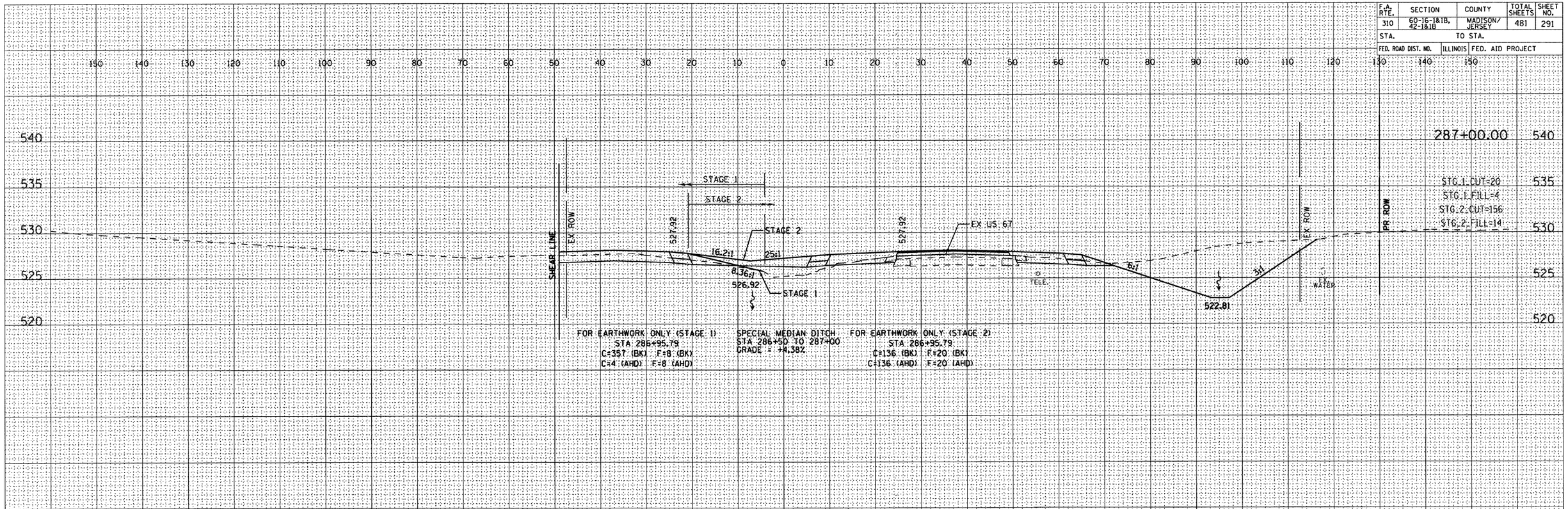

F.A. RTE.	SECTION	COUNTY	TOTAL SHEETS	SHEET NO.
310	60-16-1&1B, 42-1&1B	MADISON/ JERSEY	481	292
STA.		TO STA.		
FED. ROAD DIST. NO.	ILLINOIS	FED. AID PROJECT		

FINAL SURVEY	BY	DATE
SURVEYED		
PLOTTED		
TEMPLATE		
AREAS		
AREAS CHECKED		
NOTE BOOK NO.		

ORIGINAL SURVEY	BY	DATE
SURVEYED		
PLOTTED		
TEMPLATE		
AREAS		
AREAS CHECKED		
NOTE BOOK NO.		

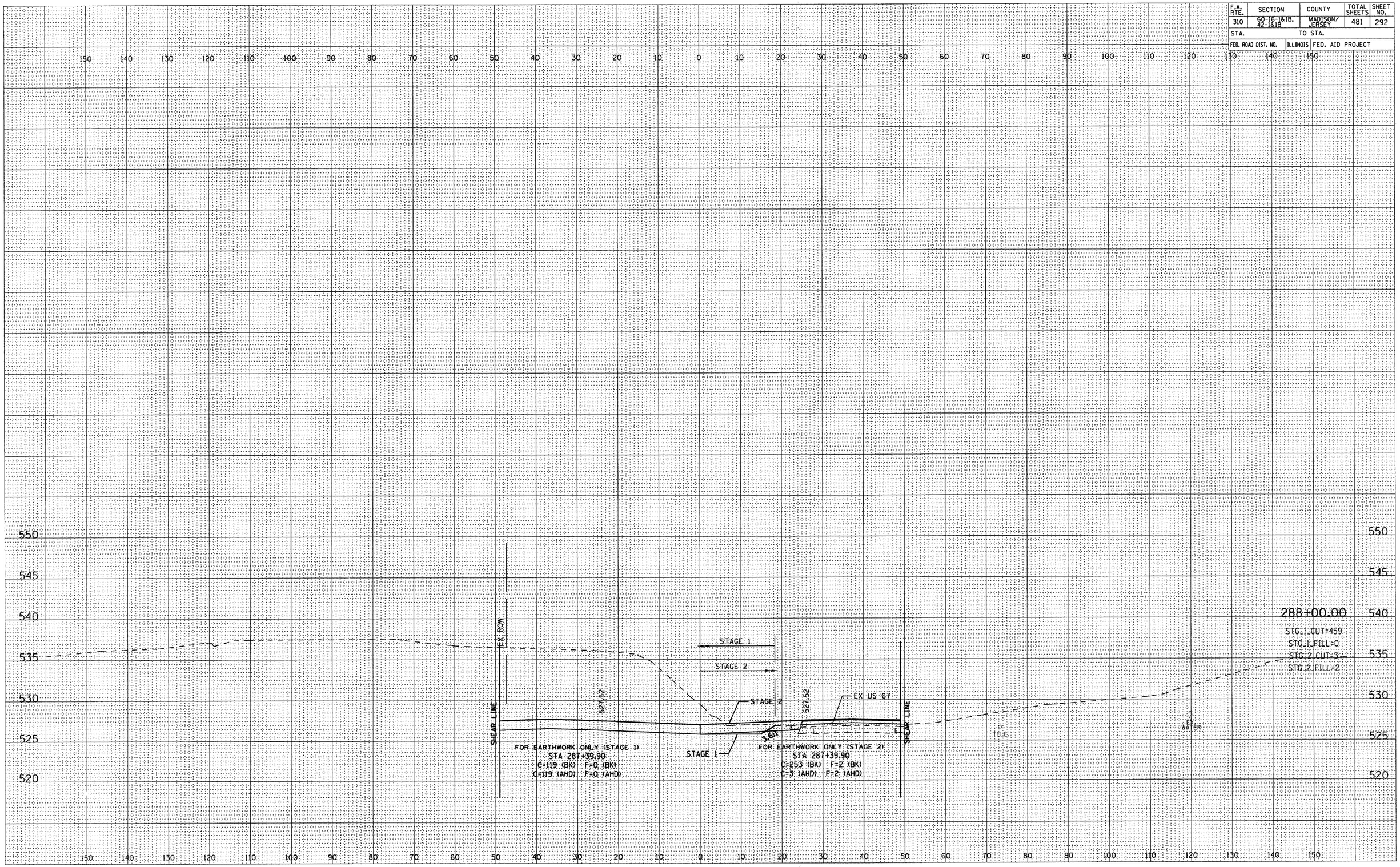

FAP ROUTE 310

F.A. RTE.	SECTION	COUNTY	TOTAL SHEETS	SHEET NO.
310	60-16-1&1B, 42-1&1B	MADISON/ JERSEY	481	293
STA.		TO STA.		
FED. ROAD DIST. NO.	ILLINOIS	FED. AID PROJECT		

FINAL SURVEY		BY	DATE
NOTE BOOK	SURVEYED		
	PLOTTED		
	TEMPLATE		
	AREAS		
	AREAS CHECKED		
NO.			

ORIGINAL SURVEY		BY	DATE
NOTE BOOK	SURVEYED		
	PLOTTED		
	TEMPLATE		
	AREAS		
	AREAS CHECKED		
NO.			

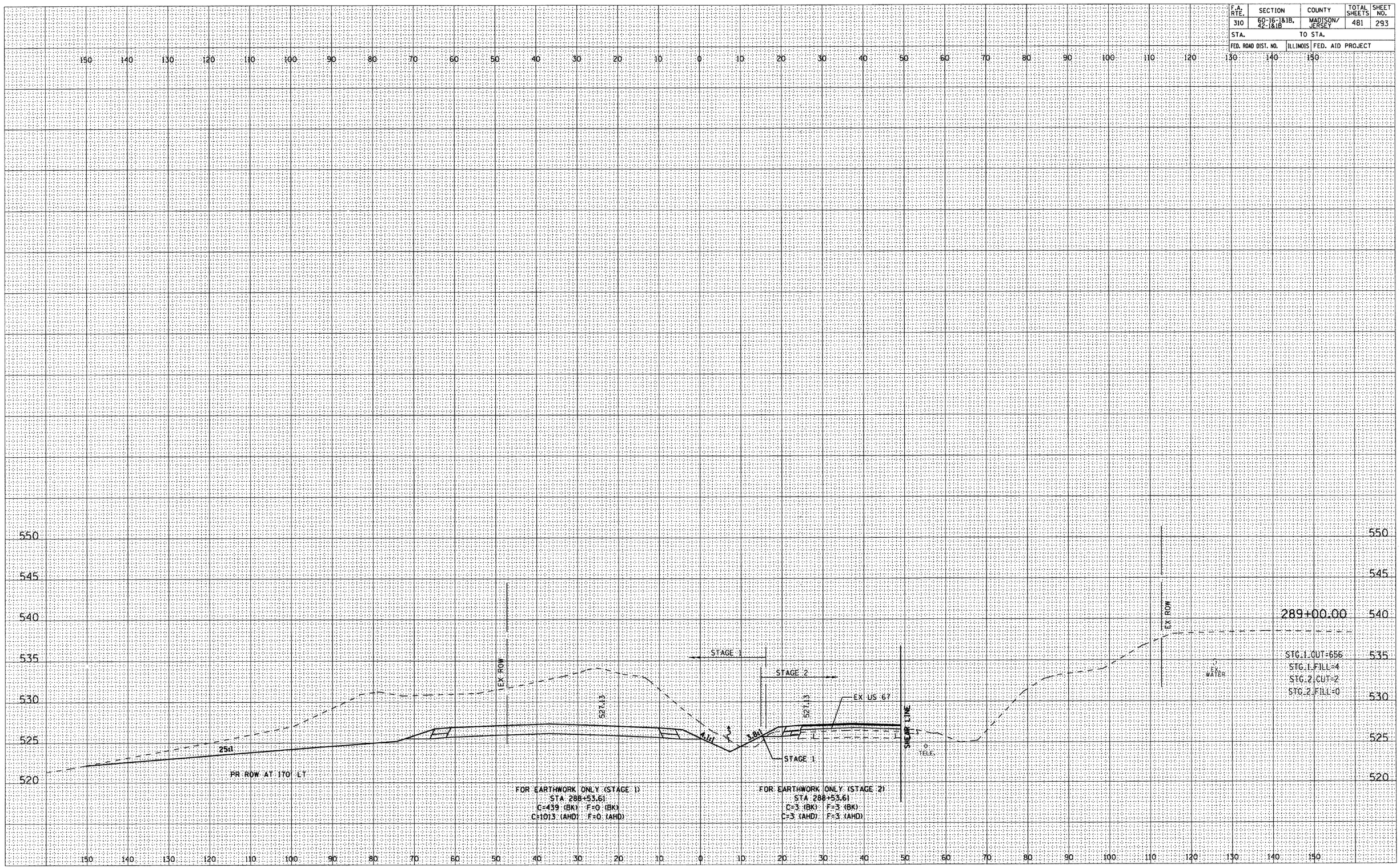

F.A. RTE.	SECTION	COUNTY	TOTAL SHEETS	SHEET NO.
310	60-16-1&1B, 42-1&1B	MADISON/ JERSEY	481	294
STA.		TO STA.		
FED. ROAD DIST. NO.	ILLINOIS	FED. AID PROJECT		

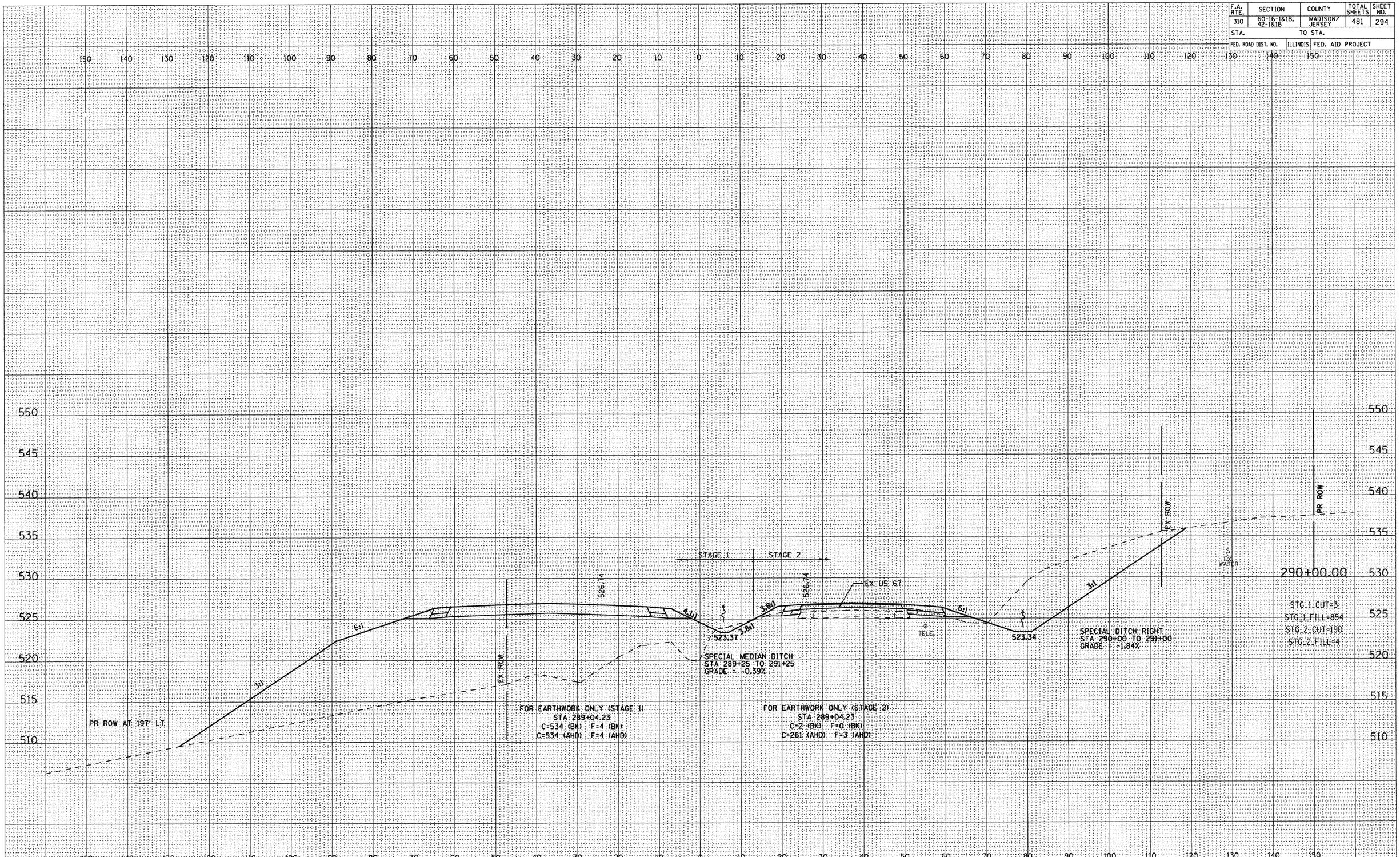

FINAL SURVEY	BY	DATE
SURVEYED		
PLOTTED		
TEMPLATE		
AREAS		
AREAS CHECKED		
NOTE BOOK NO.		

ORIGINAL SURVEY	BY	DATE
SURVEYED		
PLOTTED		
TEMPLATE		
AREAS		
AREAS CHECKED		
NOTE BOOK NO.		

F.A. RTE.	SECTION	COUNTY	TOTAL SHEETS	SHEET NO.
310	60-16-1&1B, 62-1&1B	MADISON/ JERSEY	481	295
STA.		TO STA.		
FED. ROAD DIST. NO.	ILLINOIS	FED. AID PROJECT		

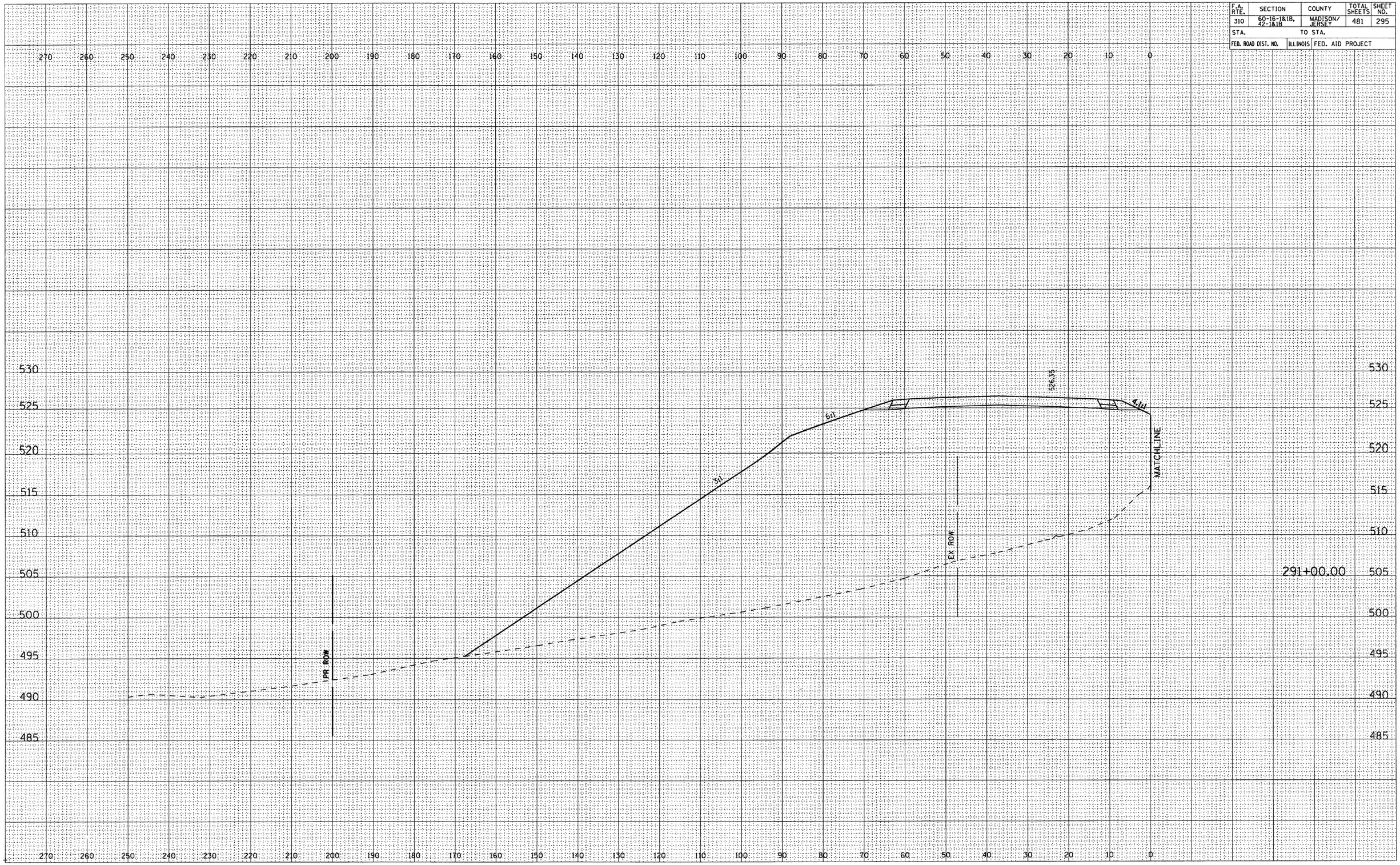

FINAL SURVEY	BY	DATE
SURVEYED		
PLOTTED		
TEMPLATE		
AREAS		
AREAS CHECKED		
NOTE BOOK NO.		

ORIGINAL SURVEY	BY	DATE
SURVEYED		
PLOTTED		
TEMPLATE		
AREAS		
AREAS CHECKED		
NOTE BOOK NO.		

FAP ROUTE 310

F.A. RTE.	SECTION	COUNTY	TOTAL SHEETS	SHEET NO.
310	60-16-1&1B, 42-1&1B	MADISON/ JERSEY	481	296
STA.		TO STA.		
FED. ROAD DIST. NO.	ILLINOIS	FED. AID PROJECT		

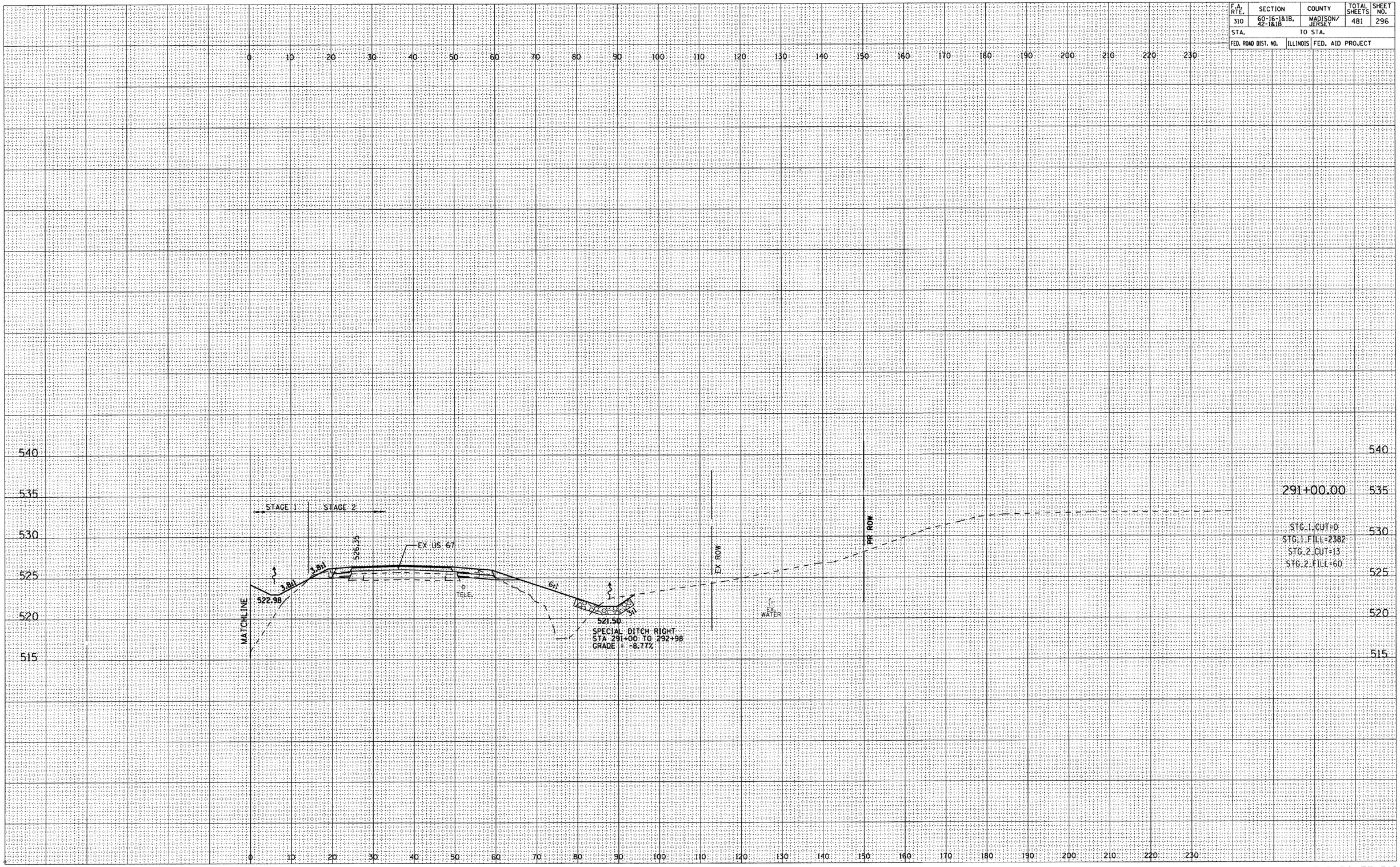

FINAL SURVEY	BY	DATE
SURVEYED		
PLOTTED		
TEMPLATE		
AREAS		
AREAS CHECKED		
NOTE BOOK NO.		

ORIGINAL SURVEY	BY	DATE
SURVEYED		
PLOTTED		
TEMPLATE		
AREAS		
AREAS CHECKED		
NOTE BOOK NO.		

FAP ROUTE 310

F.A. RTE.	SECTION	COUNTY	TOTAL SHEETS	SHEET NO.
310	60-16-1&1B, 42-1&1B	MADISON/ JERSEY	481	297
STA.		TO STA.		
FED. ROAD DIST. NO.	ILLINOIS	FED. AID PROJECT		

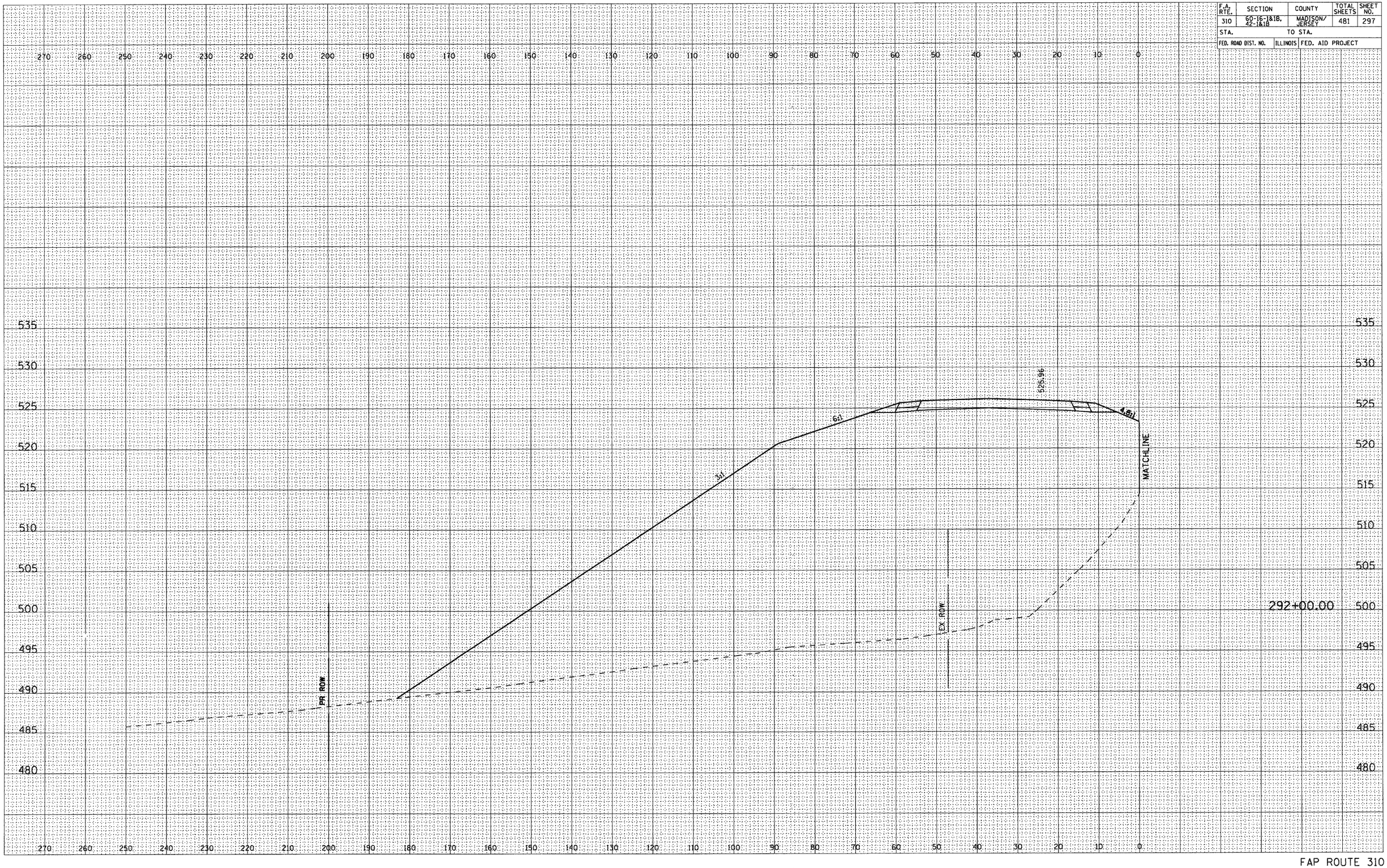

FINAL SURVEY		BY	DATE
NOTE BOOK NO.	SURVEYED		
	PLOTTED		
	TEMPLATE		
	AREAS		
	AREAS CHECKED		

ORIGINAL SURVEY		BY	DATE
NOTE BOOK NO.	SURVEYED		
	PLOTTED		
	TEMPLATE		
	AREAS		
	AREAS CHECKED		

F.A. RTE.	SECTION	COUNTY	TOTAL SHEETS	SHEET NO.
310	60-16-1&1B, 42-1&1B	MADISON/ JERSEY	481	298
STA.		TO STA.		
FED. ROAD DIST. NO.	ILLINOIS	FED. AID PROJECT		

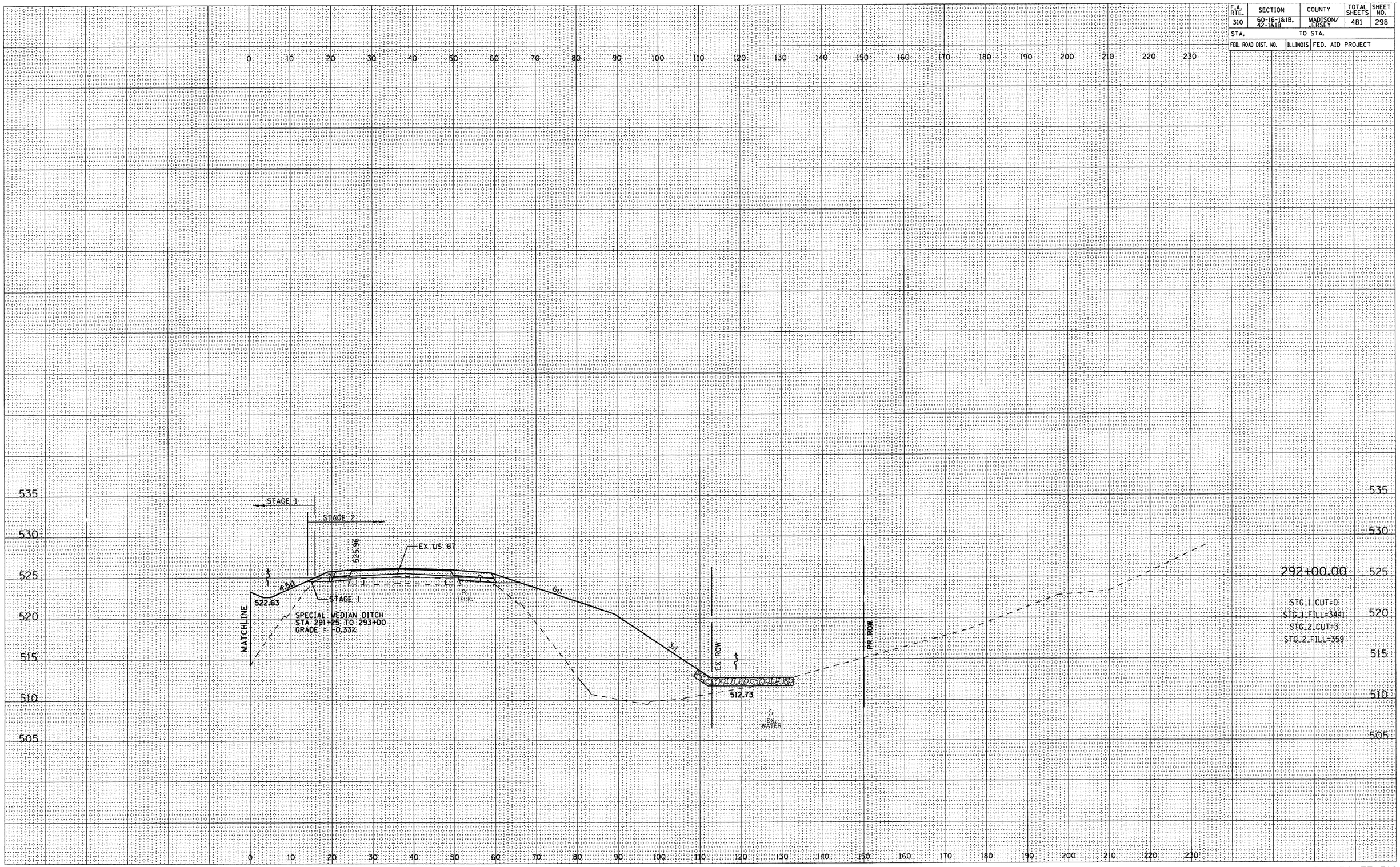

FINAL SURVEY	BY	DATE
SURVEYED		
PLOTTED		
TEMPLATE		
AREAS		
AREAS CHECKED		
NOTE BOOK NO.		

ORIGINAL SURVEY	BY	DATE
SURVEYED		
PLOTTED		
TEMPLATE		
AREAS		
AREAS CHECKED		
NOTE BOOK NO.		

FAP ROUTE 310

F.A. RTE.	SECTION	COUNTY	TOTAL SHEETS	SHEET NO.
310	60-16-1&1B, 42-1&1B	MADISON/ JERSEY	481	299
STA.		TO STA.		
FED. ROAD DIST. NO.	ILLINOIS	FED. AID PROJECT		

FINAL SURVEY		BY	DATE
NOTE BOOK	SURVEYED		
	PLOTTED		
	TEMPLATE		
	AREAS		
	AREAS CHECKED		
NO.			

ORIGINAL SURVEY		BY	DATE
NOTE BOOK	SURVEYED		
	PLOTTED		
	TEMPLATE		
	AREAS		
	AREAS CHECKED		
NO.			

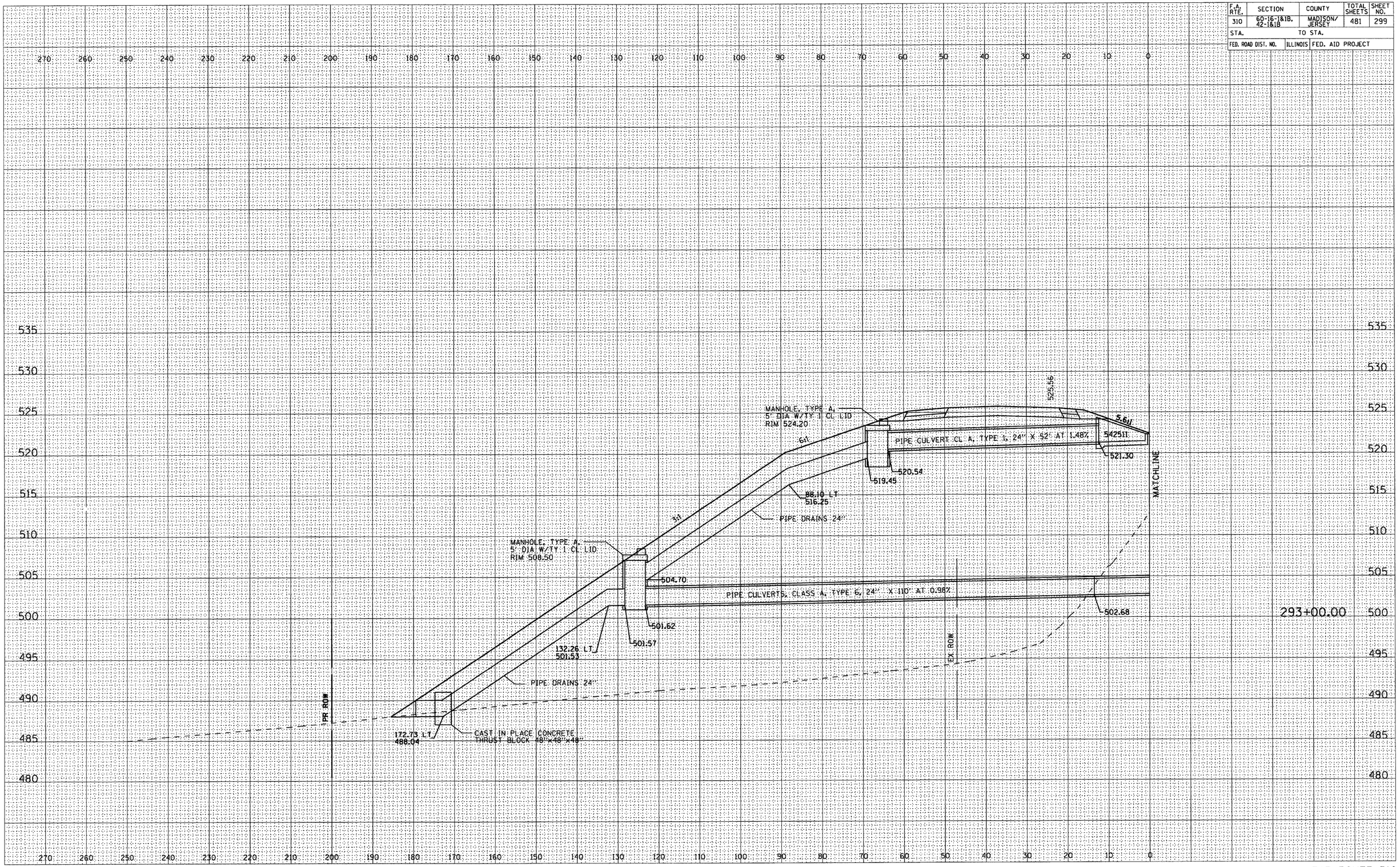

FAP ROUTE 310

F.A. RTE.	SECTION	COUNTY	TOTAL SHEETS	SHEET NO.
310	60-16-1&1B, 42-1&1B	MADISON/ JERSEY	481	300
STA.		TO STA.		
FED. ROAD DIST. NO.	ILLINOIS	FED. AID PROJECT		

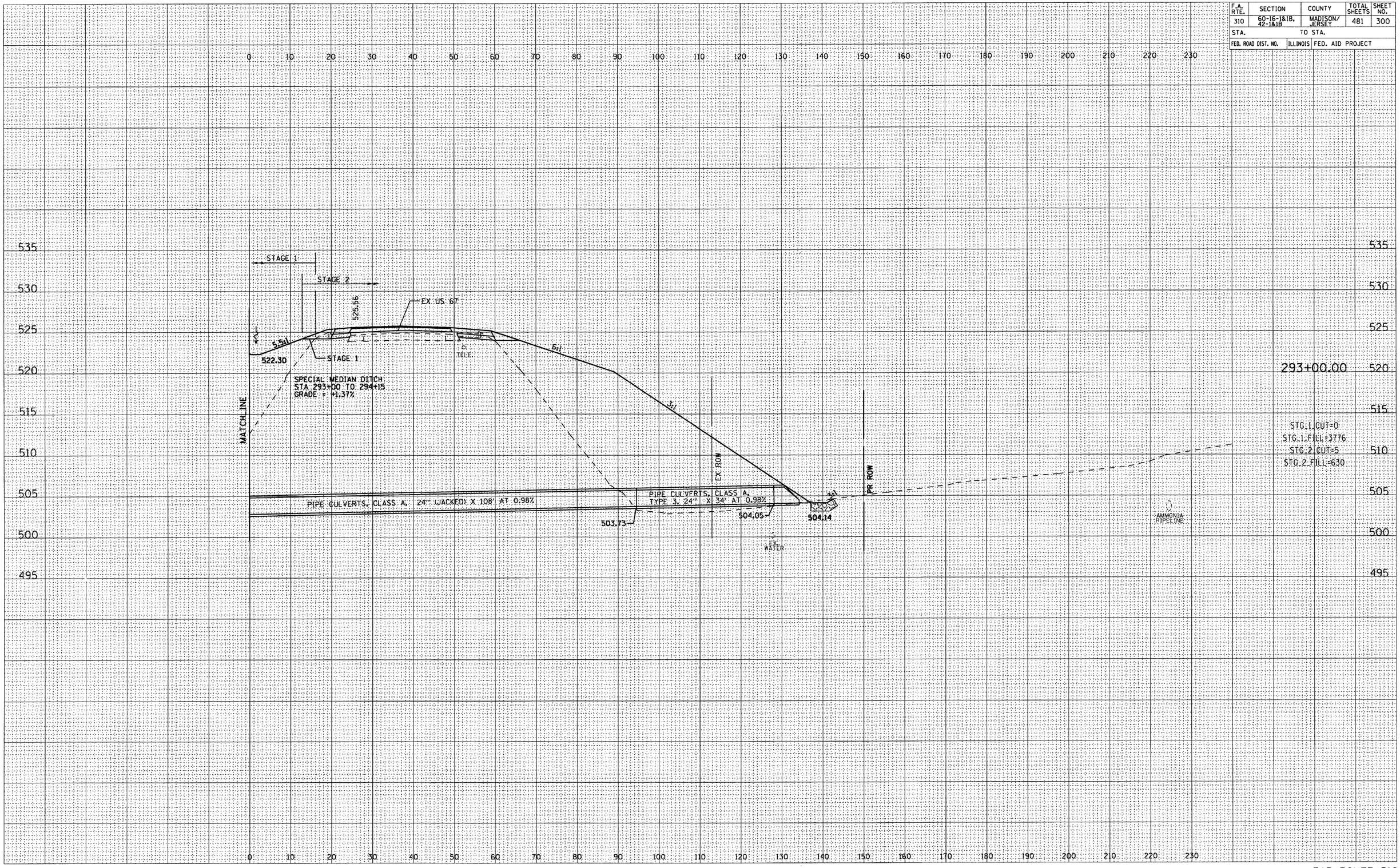

FINAL SURVEY	BY	DATE
SURVEYED		
PLOTTED		
TEMPLATE		
AREAS		
AREAS CHECKED		
NOTE BOOK NO.		

ORIGINAL SURVEY	BY	DATE
SURVEYED		
PLOTTED		
TEMPLATE		
AREAS		
AREAS CHECKED		
NOTE BOOK NO.		