FAP ROUTE	SECTION	COUNTY	TOTAL SHEETS	SHEET NO
310	60-16-1&1B,42-1&1B	MADISON AND JERSEY	481	139
STA		TO STA		
EXISTING CONDITIONS:				

CONTRACT NO. 76318

PLAN	BY	DATE
SURVEYED		
PLOTTED		
ALIGNMENT CHECKED		
R1 OF WAY CHECKED		
CADD FILE NAME		
NOTE BOOK NO.		

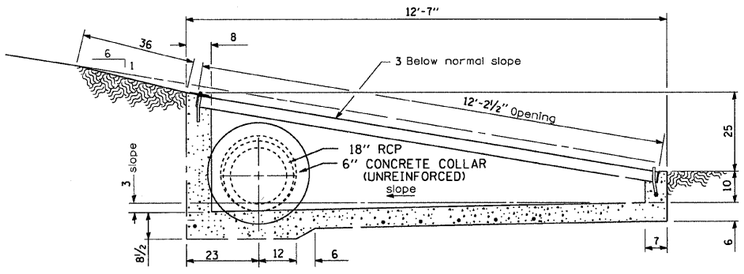

SECTION A-A

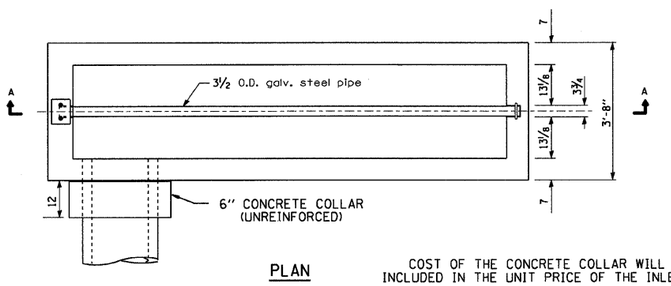

PLAN

COST OF THE CONCRETE COLLAR WILL BE INCLUDED IN THE UNIT PRICE OF THE INLET BOX

18" RCP TO INLET BOX TYPE 600 (24) CONNECTION

STA 243+20.00

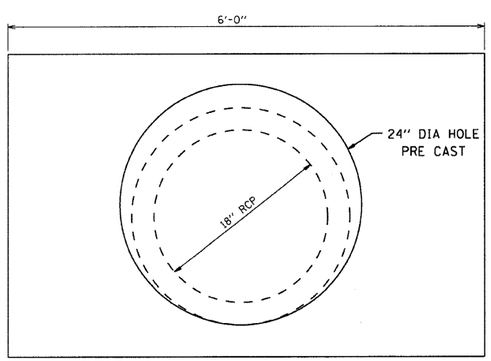

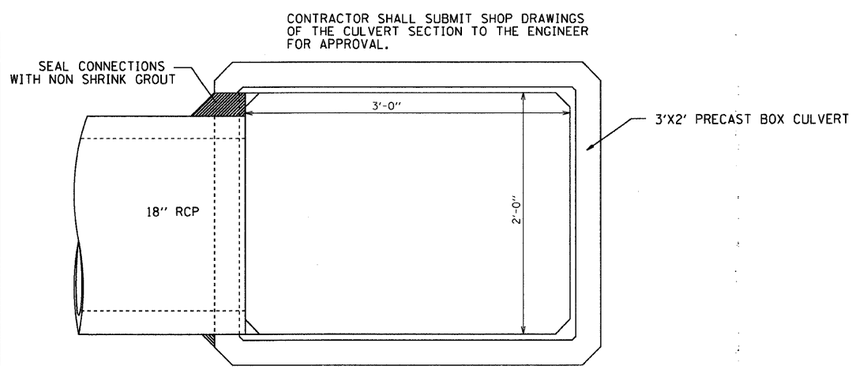

18" RCP TO 3'X2' PRECAST BOX CULVERT CONNECTION

STA 243+00.00

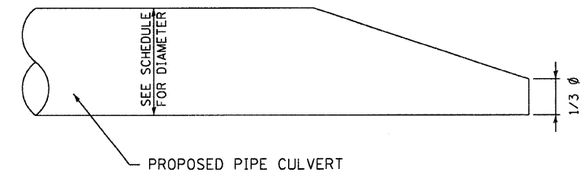

PIPE CULVERT BEVELED END SECTION

THE BEVELED END PORTION IS INCLUDED IN THE LENGTH OF THE PIPE SHOWN IN THE PLANS. IT WILL BE PAID FOR AT THE SAME UNIT PRICE PER FOOT AS THE PIPE CULVERT

20' 0 20' 40'
SCALE: 1" = 20'

REVISIONS	
NAME	DATE

ILLINOIS DEPARTMENT OF TRANSPORTATION

MISCELLANEOUS DETAILS

FAP ROUTE 310
SECTION 60-16-1&1B,42-1&1B
MADISON AND JERSEY COUNTY

DRAWN BY: EMR