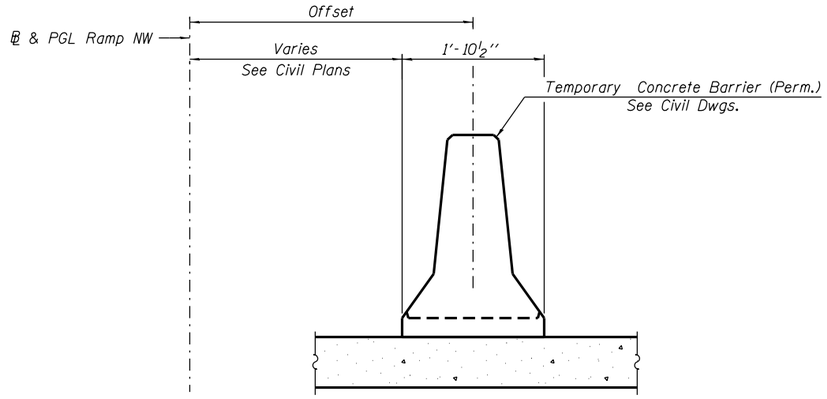

SECTION THRU SLAB ALONG UNIT II

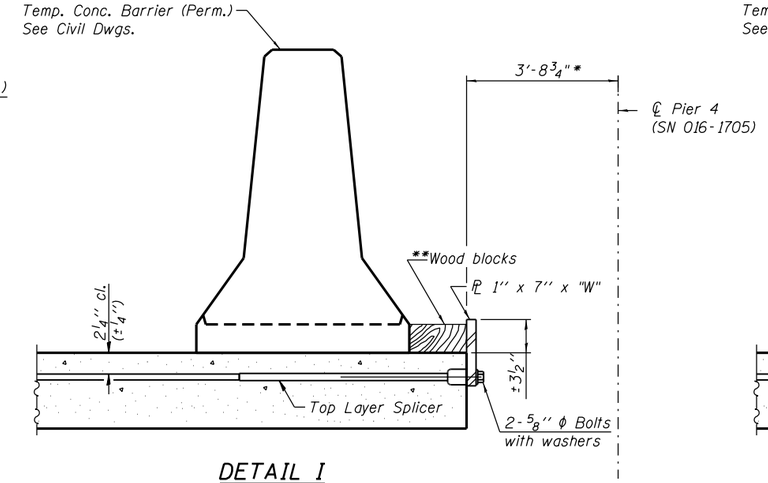

DETAIL I
(@ Pier 4)

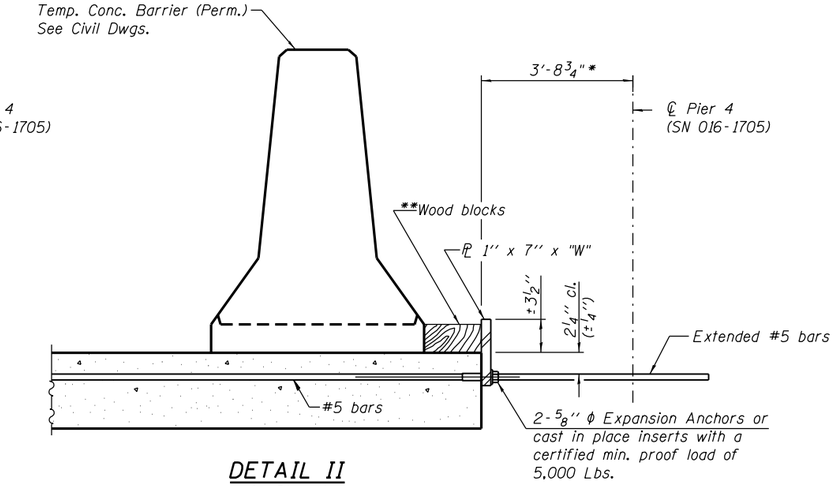

DETAIL II
(@ Pier 4)

SECTION THRU SLAB @ Pier 4

* 3'-6" concrete block out not poured in this region. Block Out concrete to be poured in Future Contract for SN 016-1710 (Ramp NE) by others.

** Wood blocks may be omitted when required to provide minimum stage traffic lane width. When the wood blocks are omitted, the concrete barrier shall be in direct contact with the steel retainer plate.

"W" = Top bars spacing + 4"

NOTES

Detail I - With Bar Splicer or Couplers:
Connect one (1) 1" x 7" x "W" steel PL to the top layer of couplers with 2-⅝" ϕ bolts screwed to coupler at approximate ℄ of each barrier panel.

Detail II - With Extended Reinforcement Bars:
Connect one (1) 1" x 7" x "W" steel PL to the concrete slab or concrete wearing surface with 2-⅝" ϕ Expansion Anchors or cast in place inserts spaced between the top layer of reinforcement at approximate ℄ of each barrier panel.

Cost of anchorage is included with Temporary Concrete Barrier (Perm.) The 1" x 7" x "W" plate shall not be removed until Ramp NE (SN 016-1710) Contractor is ready to pour concrete Block Out.

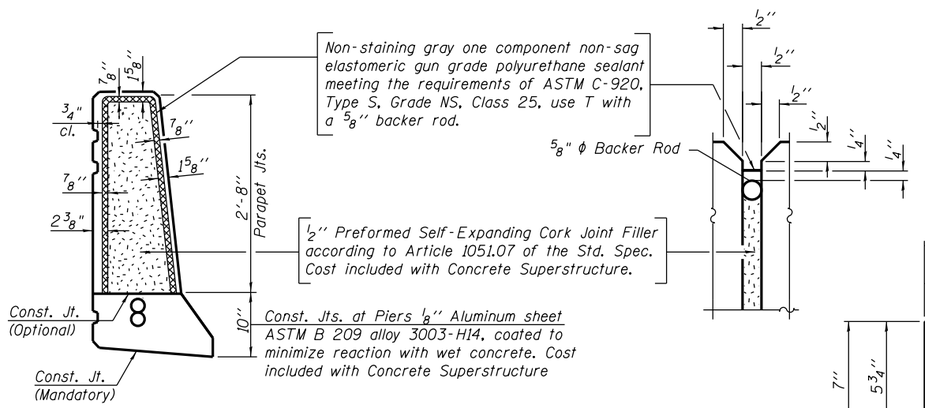

PARAPET JOINT DETAILS

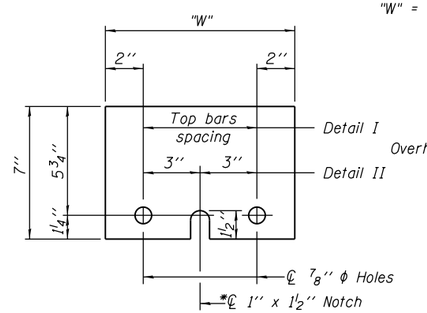

STEEL RETAINER PL 1" x 7" x "W"

* Required only with Detail II

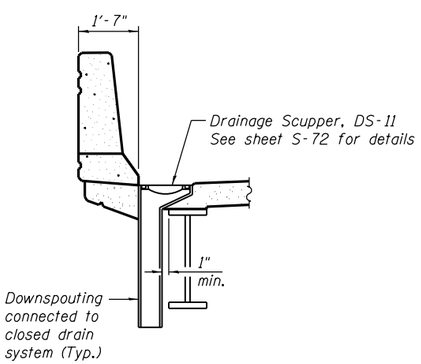

SECTION A-A

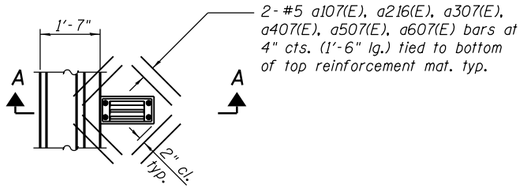

DETAIL 1
DRAINAGE SCUPPER DS-11

Note:
Reinforcement bars designated (E) shall be epoxy coated.
Cut longitudinal reinforcement to clear drainage scuppers.

NOTES:

1. For additional parapet details at overhead sign truss see Sheets S-34, S-35 and S-36.

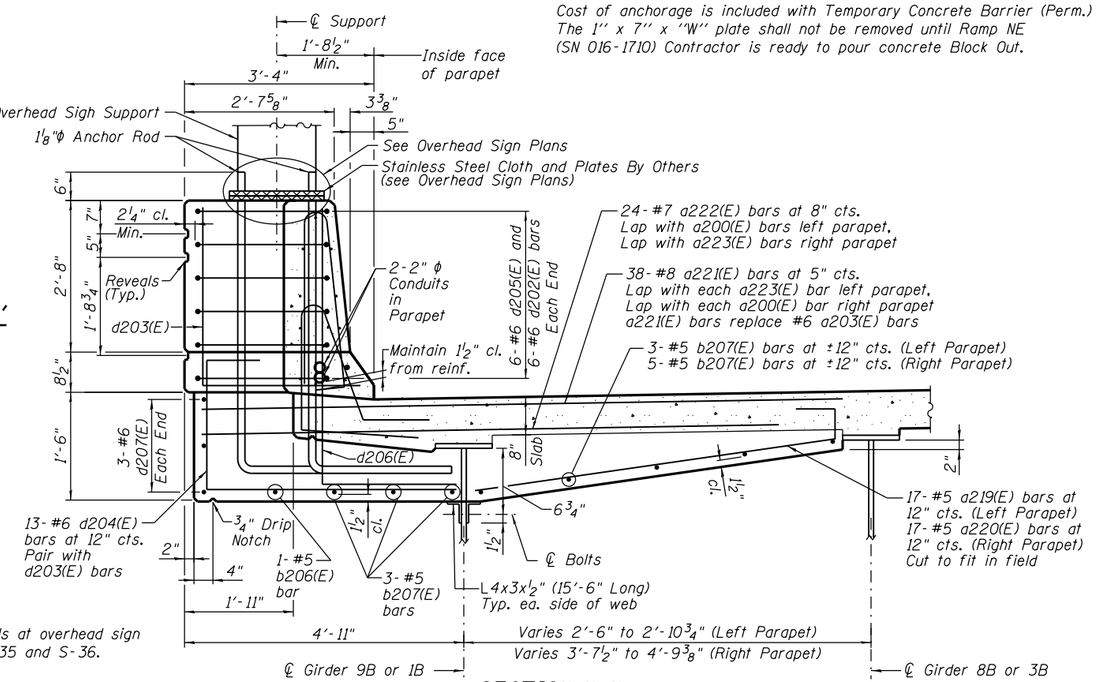

SECTION N-N

AECOM	USER NAME = patelvi	DESIGNED - JRE	REVISED	STATE OF ILLINOIS DEPARTMENT OF TRANSPORTATION	DECK DETAILS STRUCTURE NO. 016-1705	F.A.I. RTE.	SECTION	COUNTY	TOTAL SHEETS	SHEET NO.
		CHECKED - JPH	REVISED			90/94/290	2013-010R	COOK	747	374
	PLOT SCALE = N.T.S.	DRAWN - TNP	REVISED			CONTRACT NO. 60W28				
	PLOT DATE = 5/9/2014	CHECKED - EJO	REVISED		SHEET NO. S-58 OF S-165 SHEETS	ILLINOIS FED. AID PROJECT				

0161705-60W28-S058-Deck