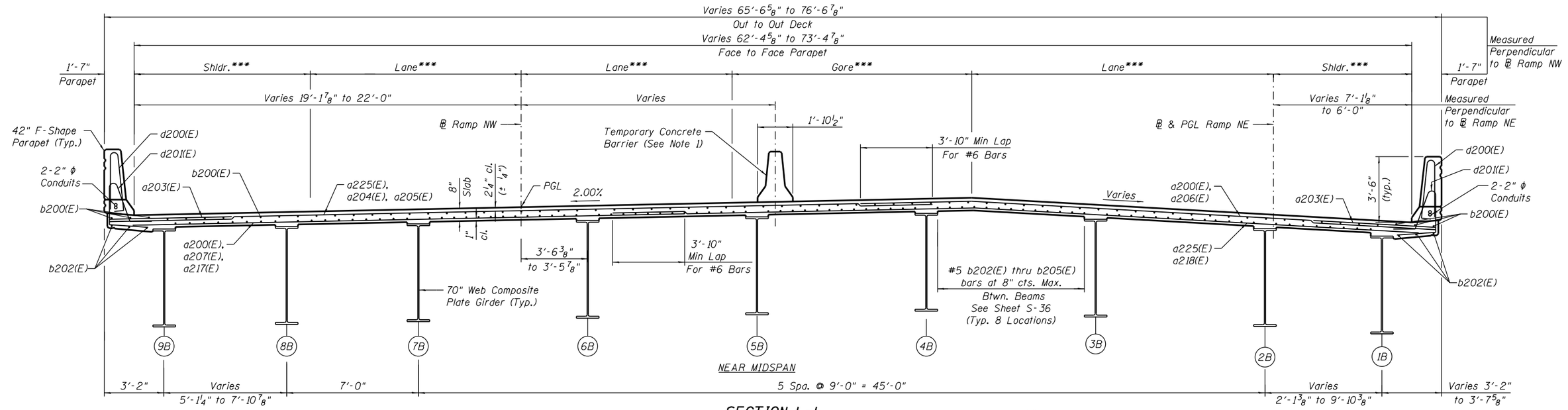

***Dimensions vary See Roadway Plans

SECTION L-L

(Looking Upstation)
Sta. 1824+58.67 to Sta. 1825+67.67
(Dimensions measured perpendicular to baseline)

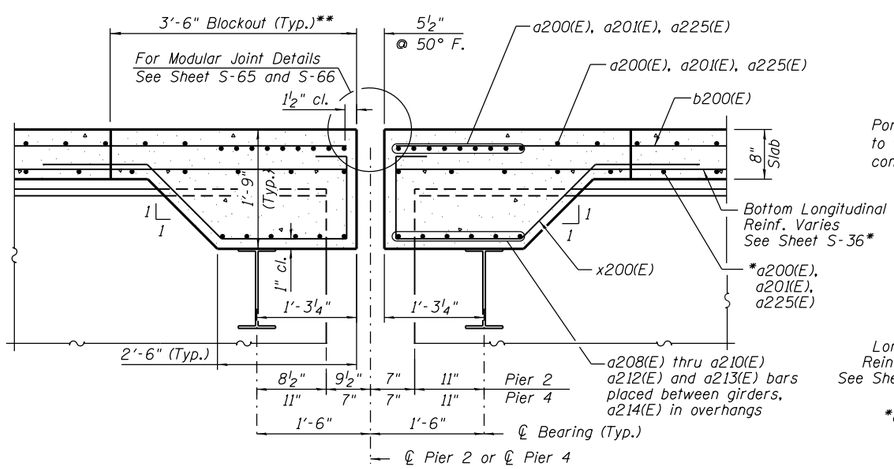

SECTION M-M

(Horiz. Dims. @ RT L's to ℄ Brg.)

*Bars to be adjusted in field to miss support boxes and beam webs

**Blockout dimensions to be verified by Contractor with Joint Manufacturer

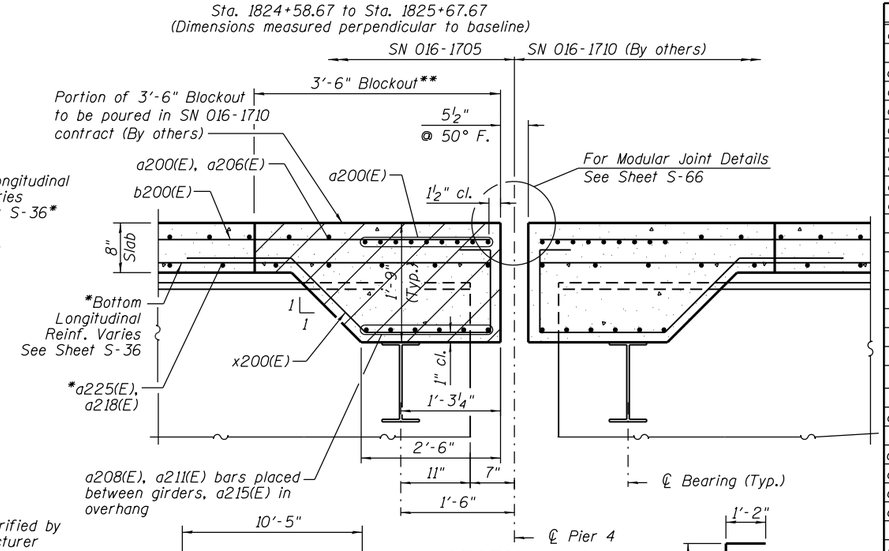

SECTION C-C

(Horiz. Dims. @ RT L's to ℄ Brg.)

SUPERSTRUCTURE BILL OF MATERIAL

Bar	No.	Size	Length	Shape
a200(E)	1334	#6	36'-0"	
a201(E)	218	#6	15'-6"	
a202(E)	272	#6	22'-0"	
a203(E)	1596	#6	6'-6"	
a204(E)	3	#6	44'-5"	
a205(E)	6	#6	40'-0"	
a206(E)	3	#6	47'-0"	
a207(E)	2	#6	41'-5"	
a208(E)	48	#6	8'-8"	
a209(E)	6	#6	5'-8"	
a210(E)	6	#6	2'-2"	
a211(E)	6	#6	9'-6"	
a212(E)	6	#6	6'-8"	
a213(E)	6	#6	7'-7"	
a214(E)	18	#6	2'-8"	
a215(E)	6	#6	3'-1"	
a216(E)	56	#5	1'-6"	
a217(E)	4	#6	37'-0"	
a218(E)	2	#6	55'-0"	
a219(E)	17	#5	2'-9"	
a220(E)	17	#5	4'-7"	
a221(E)	76	#8	9'-3"	
a222(E)	48	#7	8'-3"	
a223(E)	189	#6	26'-9"	
a224(E)	337	#6	32'-9"	
a225(E)	320	#6	43'-9"	
b200(E)	1296	#5	25'-6"	
b201(E)	312	#6	32'-6"	
b202(E)	792	#5	29'-10"	
b203(E)	98	#5	22'-8"	
b204(E)	51	#5	27'-0"	
b205(E)	220	#5	25'-3"	
b206(E)	2	#5	15'-0"	
b207(E)	14	#5	15'-3"	
b208(E)	45	#5	30'-0"	

Bar	No.	Size	Length	Shape
d200(E)	841	#5	6'-10"	
d201(E)	841	#5	7'-4"	
d202(E)	24	#6	13'-7"	
d203(E)	38	#6	5'-10"	
d204(E)	26	#6	7'-3"	
d205(E)	24	#6	15'-0"	
d206(E)	36	#6	6'-10"	
d207(E)	12	#6	10'-5"	
e200(E)	39	#4	19'-8"	
e201(E)	7	#4	18'-3"	
e202(E)	196	#4	18'-11"	
e203(E)	7	#4	18'-9"	
e204(E)	7	#4	15'-5"	
e205(E)	6	#4	27'-3"	
e206(E)	6	#4	27'-5"	
e207(E)	6	#4	27'-4"	
e208(E)	6	#4	26'-9"	
e209(E)	4	#8	19'-8"	
e210(E)	5	#8	34'-9"	
e211(E)	5	#8	35'-1"	
e212(E)	5	#8	34'-11"	
e213(E)	5	#8	34'-3"	
e214(E)	8	#4	2'-4"	
e215(E)	1	#8	2'-4"	
e216(E)	8	#4	2'-7"	
e217(E)	1	#8	2'-7"	
x200(E)	118	#5	8'-2 1/2"	
Reinforcement Bars, Epoxy Coated			Pound	259,150
Concrete Superstructure			Cu. Yd.	675
Bridge Deck Grooving (Special)			Sq. Yd.	1984
Protective Coat			Sq. Yd.	2505

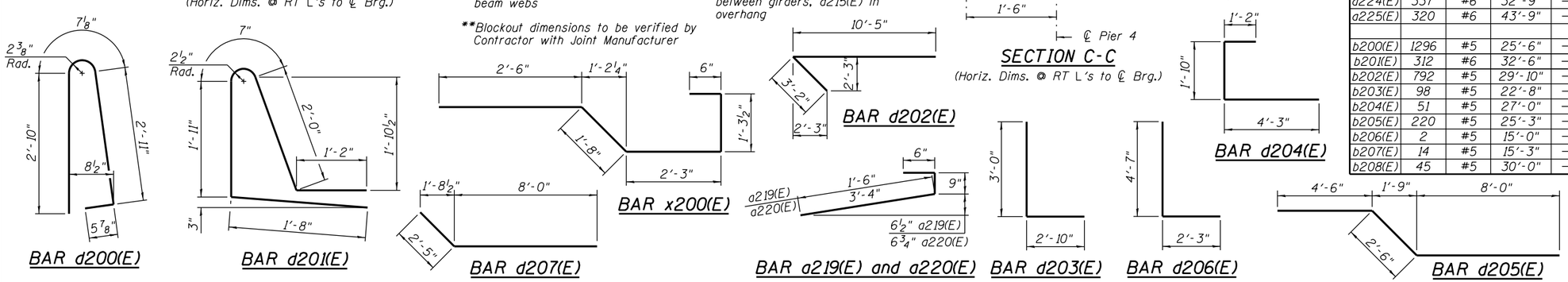

NOTE:

1. For location of Temporary Concrete Barrier see Civil sheets. For barrier connection details see Sheet S-58.
2. See Sheet S-35 for Deck Cross Slope detail.

0161705-60W28-S053-Xsect.dgn

AECOM

USER NAME = floresg	DESIGNED - JRE	REVISED	
	CHECKED - JPH	REVISED	
PLOT SCALE = N.T.S.	DRAWN - TNP	REVISED	
PLOT DATE = 5/7/2014	CHECKED - EJO	REVISED	

STATE OF ILLINOIS
DEPARTMENT OF TRANSPORTATION

DECK CROSS SECTION II – UNIT II
STRUCTURE NO. 016-1705

SHEET NO. S-53 OF S-165 SHEETS

F.A.I. RTE.	SECTION	COUNTY	TOTAL SHEETS	SHEET NO.
90/94/290	2013-010R	COOK	747	369
		CONTRACT NO. 60W28		
		ILLINOIS FED. AID PROJECT		