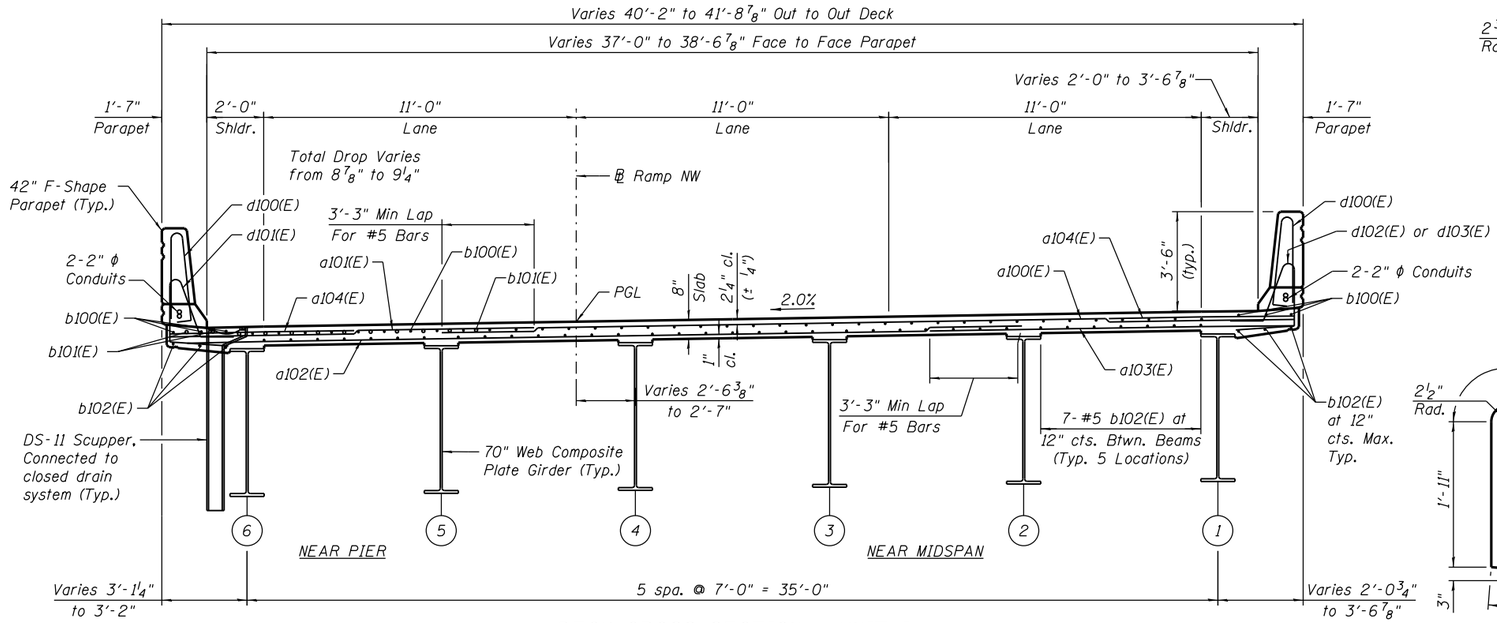

DECK CROSS SECTION - UNIT I

(Looking Upstation)
(Dimensions measured perpendicular to baseline)

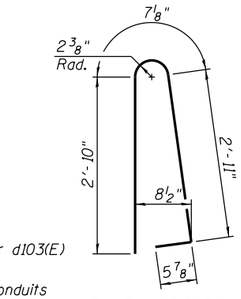

BAR d100(E)

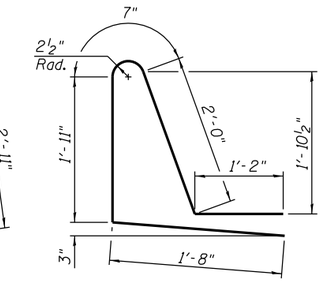

BAR d101(E)

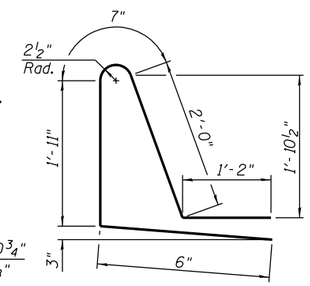

BAR d102(E)

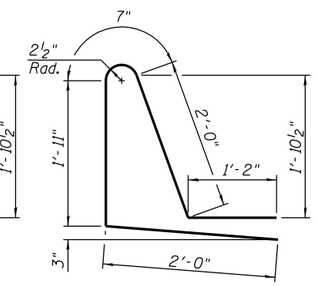

BAR d103(E)

SUPERSTRUCTURE BILL OF MATERIAL

Bar	No.	Size	Length	Shape
a100(E)	822	#5	30'-0"	
a101(E)	822	#5	14'-5"	
a102(E)	563	#5	30'-0"	
a103(E)	563	#5	14'-5"	
a104(E)	1644	#6	6'-6"	
a105(E)	60	#6	6'-8"	
a106(E)	12	#6	2'-8"	
a107(E)	40	#5	1'-6"	
b100(E)	644	#5	29'-9"	
b101(E)	172	#6	17'-3"	
b102(E)	615	#5	28'-0"	
d100(E)	816	#5	6'-10"	
d101(E)	406	#5	7'-4"	
d102(E)	384	#5	6'-2"	
d103(E)	26	#5	7'-8"	
e100(E)	32	#4	19'-8"	
e101(E)	7	#4	17'-3"	
e102(E)	126	#4	16'-2"	
e103(E)	7	#4	16'-8"	
e104(E)	7	#4	22'-7"	
e105(E)	7	#4	15'-2"	
e106(E)	105	#4	18'-2"	
e107(E)	7	#4	18'-3"	
e108(E)	6	#4	29'-4"	
e109(E)	6	#4	29'-3"	
e110(E)	6	#4	29'-8"	
e111(E)	6	#4	29'-5"	
e112(E)	6	#8	31'-11"	
e113(E)	6	#8	32'-3"	
e114(E)	6	#8	32'-1"	
e115(E)	6	#8	32'-0"	
e116(E)	4	#8	19'-8"	
x100(E)	82	#5	8'-2 1/2"	
Reinforcement Bars, Epoxy Coated			Pound	146,170
Concrete Superstructure			Cu. Yd.	511
Bridge Deck Grooving (Special)			Sq. Yd.	1442
Protective Coat			Sq. Yd.	1906

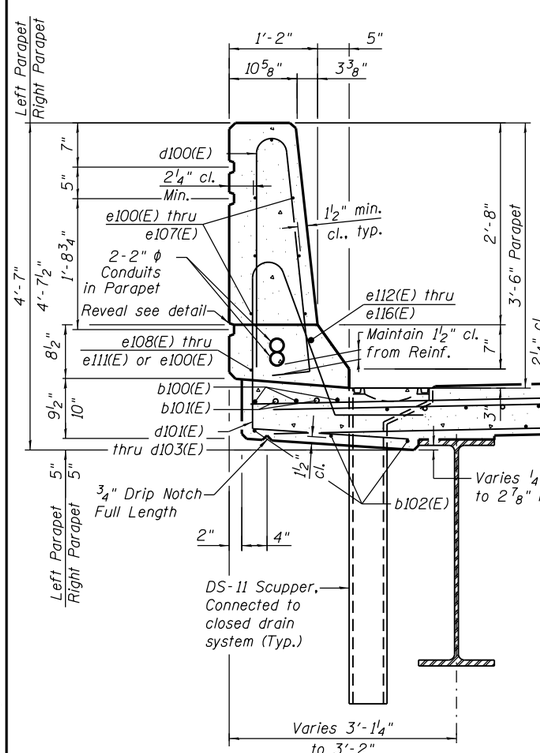

SECTION THRU PARAPET

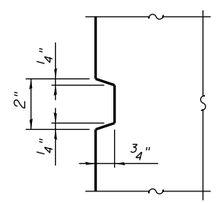

REVEAL DETAIL

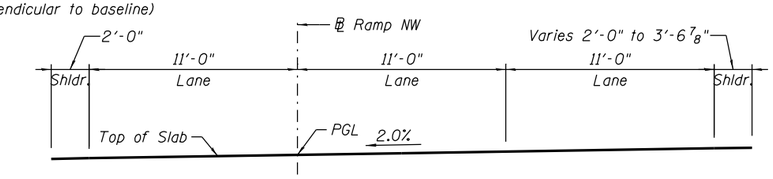

Sta. 1818+45.67 to Sta. 1822+20.67

DECK CROSS SLOPE DETAIL UNIT I

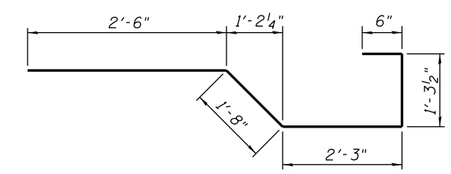

BAR x100(E)

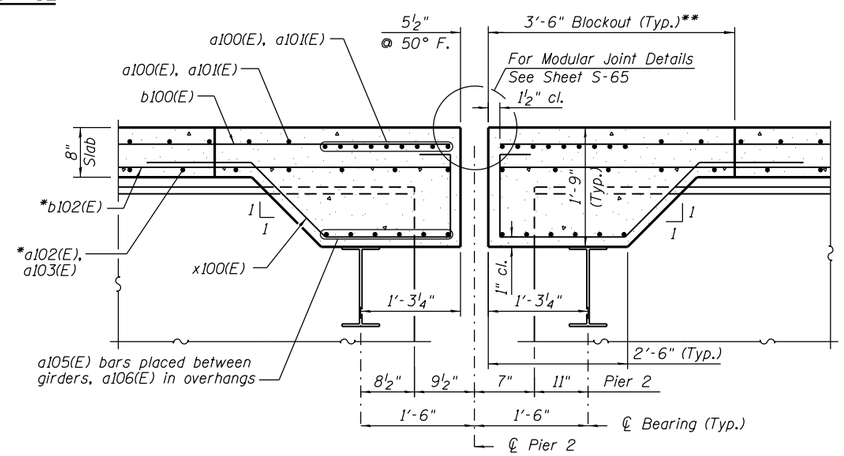

**Blockout dimensions to be verified by Contractor with Joint Manufacturer

SECTION B-B

(Horiz. Dims. @ RT L's to ℄ Brg.)

*Bars to be adjusted in field to miss support boxes and beam webs

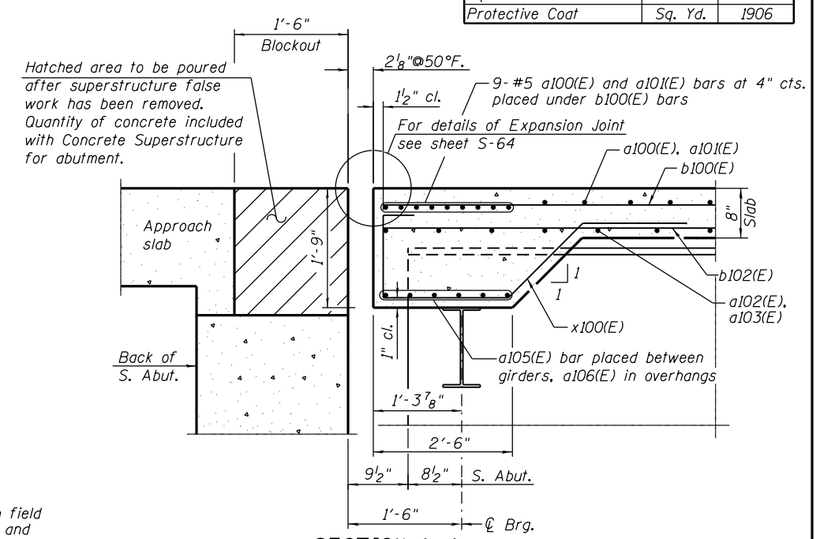

SECTION A-A

(Horiz. Dims. @ RT L's to ℄ Brg.)

0161705-60W28-S051-Xsect.dgn

AECOM	USER NAME = floresg	DESIGNED - JRE	REVISED
		CHECKED - JPH	REVISED
	PLOT SCALE = N.T.S.	DRAWN - TNP	REVISED
	PLOT DATE = 5/7/2014	CHECKED - EJO	REVISED

STATE OF ILLINOIS
DEPARTMENT OF TRANSPORTATION

DECK CROSS SECTION – UNIT I
STRUCTURE NO. 016-1705
SHEET NO. S-51 OF S-165 SHEETS

F.A.I. RTE.	SECTION	COUNTY	TOTAL SHEETS	SHEET NO.
90/94/290	2013-010R	COOK	747	367
		CONTRACT NO. 60W28		
		ILLINOIS FED. AID PROJECT		