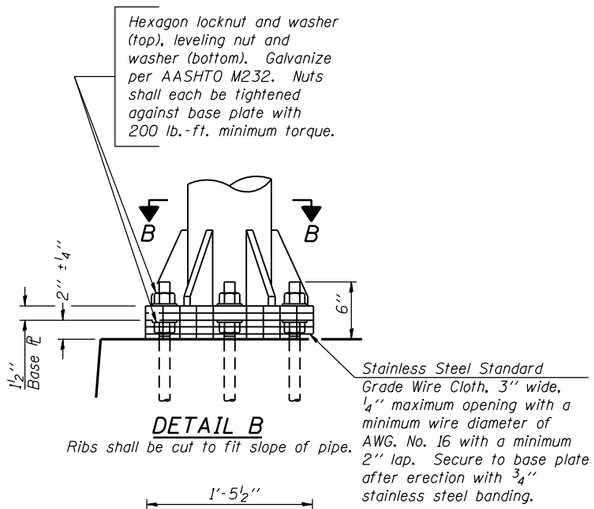

DETAIL B

Ribs shall be cut to fit slope of pipe.

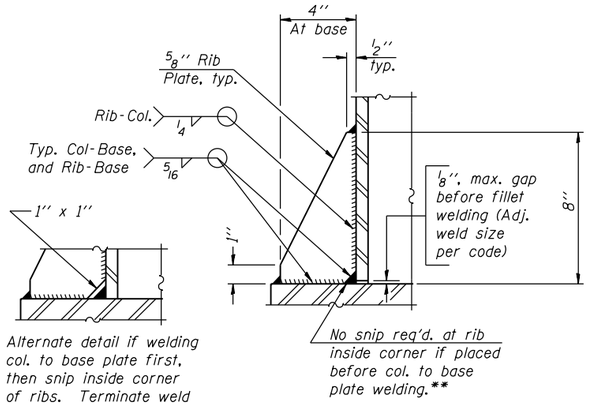

SECTION D-D

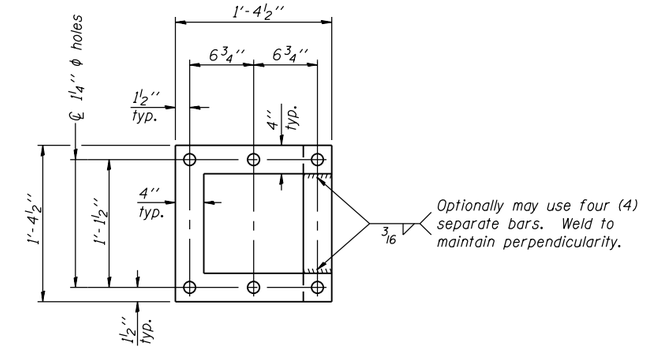

POSITIONING PLATE(S)

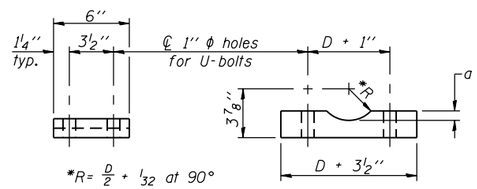

*R = D/2 + 1/32 at 90°

D = Outside Diameter of Chord.

SADDLE SHIM DETAIL

ASTM B26 Alloy 356-F
or
ASTM B209 Alloy 6061-T651
(4 required per sign truss)

Truss Chord Nominal Dia.	a
5''	3/4''
5 1/2''	13/16''
6''	7/8''
6 1/2''	15/16''

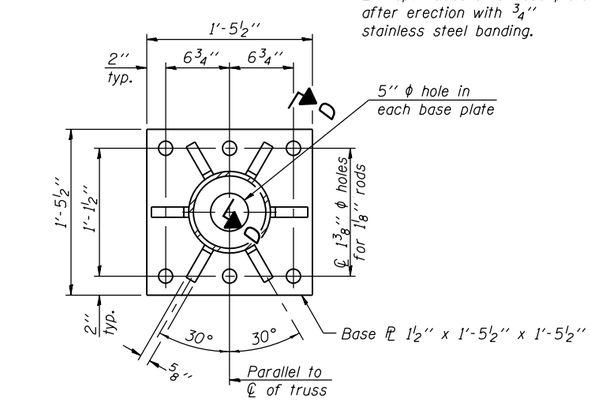

SECTION B-B

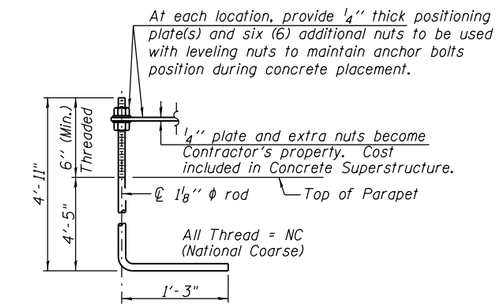

ANCHOR ROD DETAIL

Cost included in Concrete Superstructure (24 Total)
(ASTM F 1554 Grade 105)
Full length hot dipped galvanized

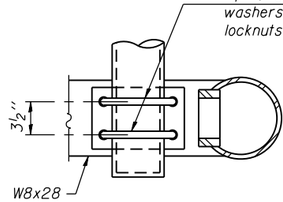

SECTION C-C

(Handhole cover not shown)

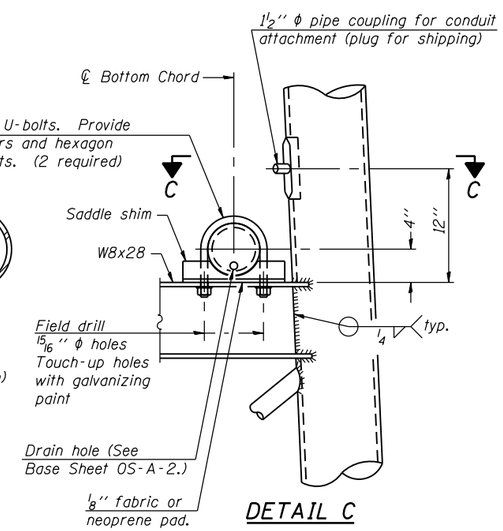

DETAIL C

TYPE I-A TRUSS
8'' ϕ PIPE SUPPORT FRAME DETAILS

60W28_SignStructure_Sheet06.dgn

USER NAME = patelv1	DESIGNED - VP	REVISED	
	CHECKED - ATB	REVISED	
PLOT SCALE = N.T.S.	DRAWN - MRK	REVISED	
PLOT DATE = 5/9/2014	CHECKED - ATB	REVISED	

AECOM

STATE OF ILLINOIS
DEPARTMENT OF TRANSPORTATION

OVERHEAD SIGN STRUCTURES
SUPPORT FRAME FOR TYPE I-A ALUMINUM TRUSS
SHEET NO. 50H-060F 50H-10 SHEETS

F.A.I. RTE.	SECTION	COUNTY	TOTAL SHEETS	SHEET NO.
90/94/290	2013-010R	COOK	747	287

CONTRACT NO. 60W28

ILLINOIS FED. AID PROJECT