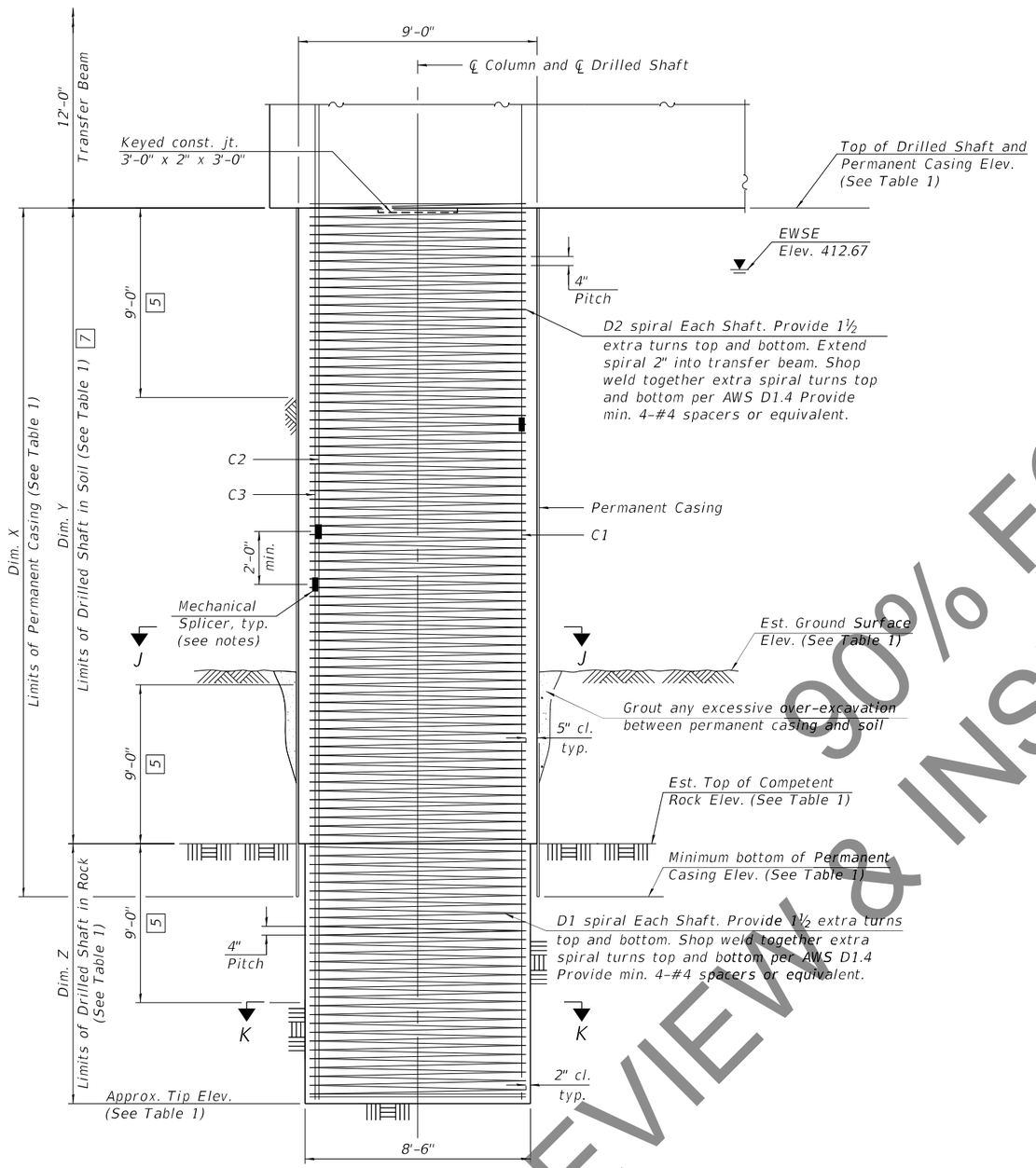

DRILLED SHAFT DETAIL

(One shaft shown, three shafts required, one under each column)

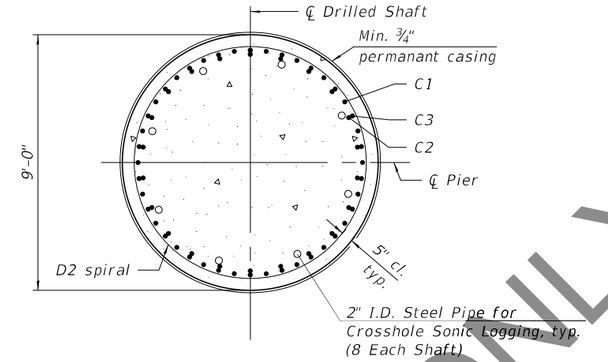

SECTION J-J

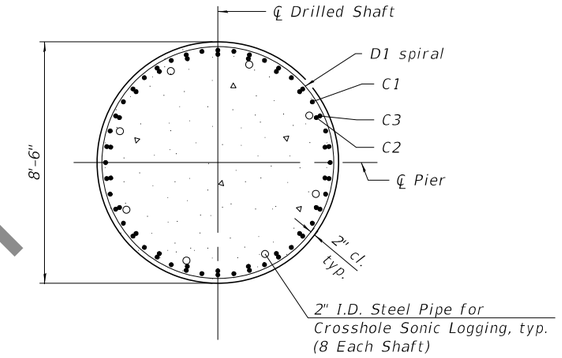

SECTION K-K

5 No splicing of bars allowed in this region.

7 If the prevailing water surface elevation during construction is consistently different than estimated on the plans, the contractor may propose an adjustment to the top of the drilled shaft elevation as part of their installation procedure. The top of all drilled shafts within a substructure unit shall be constructed to the same elevation and extend above the prevailing water surface. The quantities and reinforcement detailing are based on the top of shaft and the estimated elevations shown and may change based on the actual elevations encountered at each shaft and the final top of shaft elevation.

Notes:

The Contractor may propose a construction joint in the drilled shaft so separate pours can be made, if the shaft can be poured in the dry, subject to approval from the Engineer.

The Permanent Casing is shown embedded 2 ft. into rock for estimate of quantities. Pay Limits for the Permanent Casing shall be based on the minimum length shown.

Alternate every other Mechanical Splicer 2'-0" min.

When splicing of spiral reinforcement is necessary, the spirals shall be provided with 1 ½ extra turns at the ends to be spliced. These additional turns shall either be welded together according to AWS D1.4, or shall both terminate with a 135° standard hook.

The Contractor is responsible for determining the casing thickness and the actual tip elevation to be used. See Article 516.06(d) of the Standard Specifications. Pay limits for the Permanent Casing shall be based on minimum length shown.

Wet construction methods within the permanent casing may be required. The Contractor's installation procedure shall clearly address cleaning and inspection methods proposed for use with wet construction methods which ensure adequate end bearing on rock is achieved.

For Top Plan and Part elevation, see sheet 199 of 292 .

For Transfer Beam details, see sheet 200 of 292 .

For additional notes, bar details, and Bill of Material, see sheets 203 and 204 of 292 .

For Table 1, see sheet 202 of 292 .

For Mechanical Splicer details, see sheet 248 of 292 .

TABLE 1

		Pier 9
℄ Pier Station		1797+59.97
Bearing Seat Elevation	Girder 1	452.44
	Girder 2	452.65
	Girder 3	452.80
	Girder 4	452.58
	Girder 5	452.37
	Girder 7	452.15
Top of Cap Elevation		452.15
Bottom of Cap Elevation		444.15
Column Height		17'-1¾"
Top of Shaft Elevation		415.00
Approx. Tip Elevation		347.40
Est. Ground Surface Elevation		377.80
Est. Top of Rock Elevation		372.90
Min. bott. of Permanent Casing Elev.		370.90
Dim. X		44'-1¼"
Dim. Y		42'-1¼"
Dim. Z		25'-6"

PIER 9

Mark	Bar Callouts
(1)	43 sets of 1-#6 s901(E) and 1-#6 s905(E) at 5" cts.
(2)	14 sets of 2-#6 s902(E) at 6" cts.
(3)	6 sets of 4-#6 s907(E) at 5" cts.
(4)	48-#6 s908(E) at abt. 8" cts.
(5)	33 sets of 1-#6 s903(E) and 2-#6 s906(E) at 6" cts.
(6)	17 sets of 2-#6 s904(E) at 6" cts
(7)	18 sets of 2-#6 s904(E) at 6" cts.
(8)	14-#7 hp902(E) hoops at 3" cts.
(9)	44-#7 hp902(E) hoops at 3" cts.
(10)	33-#7 hp901(E) hoops at 4" cts.
T1	2 layers of 13-#11 p901(E) or p902(E) at 7⅜" cts.
T2	14 bundles of 1-#11 p905(E) and 1-#11 p906(E) at 12" max.
B1	2 layers of 13-#11 p903(E) at 7⅜" cts.
B2	13-#7 p904(E) at 7⅜" cts.
B3	14 bundles of 1-#11 p905(E) and 1-#11 p906(E) at 12" max.
H1	10-#8 h901(E) at 7½" cts.
H2	18-#9 h902(E) at 7" cts.
H3	13-#6 h903(E) at abt. 7⅜" cts.
H4	13-#6 h904(E) at abt. 7⅜" cts.
A1	6 sets of 1-#7 u903(E) and 1-#7 u904(E) at 10½" cts.
A2	10-#7 u905(E) at 10¾" cts.
U1	11-#8 u901(E) spaced with h901(E) and p901(E)
U2	20-#9 u902(E) splice with h902(E) and space with p905(E)
C1	22 sets of 1-#14 v901(E) and 1-#14 v902(E) (top)
C2	22 sets of 1-#14 v903(E) and 1-#14 v904(E) (top) Bundle w/ C3
C3	22 sets of 1-#14 v905(E) and 1-#14 v906(E) (top) Bundle w/ C2
C4	40-#11 v907(E) equally spaced
D1	#7 sp901(E) at 4" pitch
D2	#7 sp902(E) at 4" pitch
D3	#7 sp903(E) at 3" pitch
K1	18-#5 s909(E) spaced at 6" cts.
K2	3-#5 h905(E) spaced with n901(E)
K3	1-#5 h905(E) each face
K4	2-#5 h906(E) each face
K5	3-#5 n901(E) at 12" cts., each face
R1	#5 r901(E)

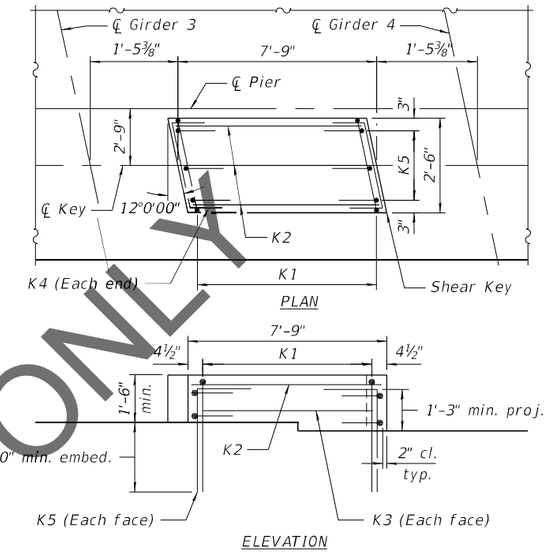

SHEAR KEY DETAILS

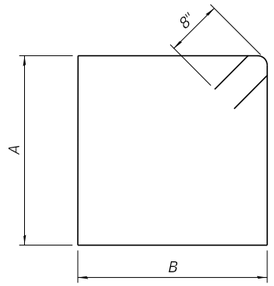

BARS s901(E) & s903(E)

Bars	A	B
s901(E)	7'-8"	7'-8"
s903(E)	11'-8"	9'-4"

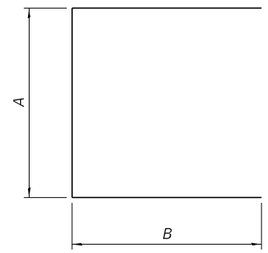

BARS s902(E) & s904(E) & s907(E)

Bars	A	B
s902(E)	7'-8"	5'-10"
s904(E)	11'-8"	6'-8"
s907(E)	4'-10"	5'-10"

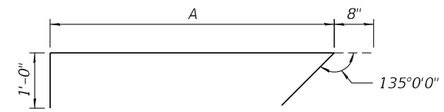

BARS s905(E) & s906(E)

Bars	A
s905(E)	7'-8"
s906(E)	11'-8"

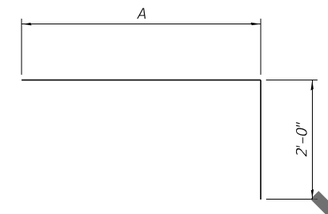

BARS p901(E) & p902(E)

Bars	A
p901(E)	22'-5"
p902(E)	51'-0"

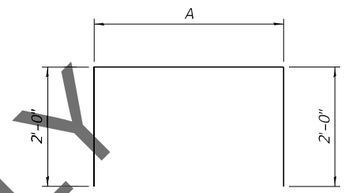

BARS p905(E) & p906(E)

Bars	A
p905(E)	54'-0"
p906(E)	53'-6"

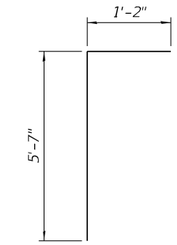

BARS u903(E)

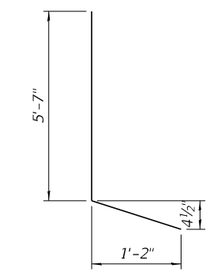

BARS u904(E)

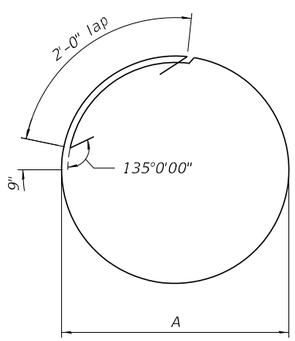

BARS hp901(E) & hp902(E)

Bars	A
hp901(E)	8'-2"
hp902(E)	6'-8"

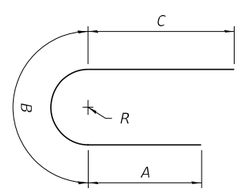

BARS u901(E) & u902(E)

Bars	A	B	C	R
u901(E)	5'-4"	11'-9⅜"	5'-4"	3'-9"
u902(E)	5'-9"	14'-5"	7'-9"	4'-7"

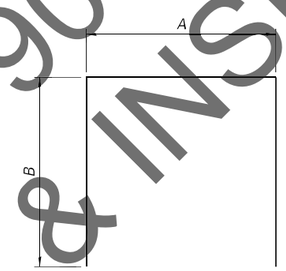

BARS u905(E) & s908(E)

Bars	A	B
u905(E)	11'-6"	4'-7"
s908(E)	7'-8"	2'-9"

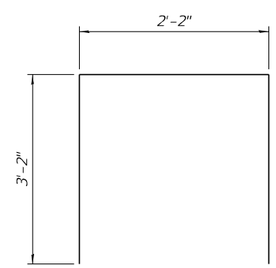

BARS s909(E)

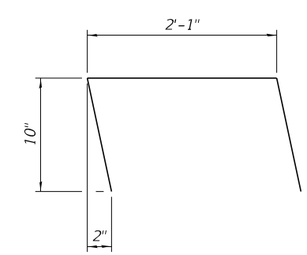

BARS h906(E)

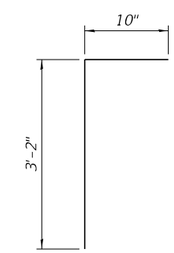

BARS n901(E)

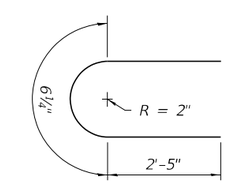

BARS r901(E)

PIER 9
BILL OF MATERIAL

	Bar	No.	Size	Length	Shape
	h901(E)	20	#8	56'-0"	
	h902(E)	36	#9	38'-0"	
	h903(E)	13	#6	31'-8"	
	h904(E)	13	#6	10'-4"	
	h905(E)	5	#5	7'-5"	
	h906(E)	4	#5	3'-9"	
	hp901(E)	99	#7	29'-2"	
	hp902(E)	174	#7	24'-5"	
	n901(E)	6	#5	4'-0"	
	p901(E)	26	#11	24'-5"	
	p902(E)	26	#11	53'-0"	
	p903(E)	26	#11	57'-8"	
	p904(E)	26	#7	3'-0"	
	p905(E)	28	#11	58'-0"	
	p906(E)	28	#11	57'-6"	
	r901(E)	8	#5	5'-4"	
	s901(E)	86	#6	32'-0"	
	s902(E)	84	#6	19'-4"	
	s903(E)	66	#6	43'-4"	
	s904(E)	104	#6	25'-0"	
	s905(E)	86	#6	9'-4"	
	s906(E)	132	#6	13'-4"	
	s907(E)	48	#6	16'-6"	
	s908(E)	48	#6	13'-2"	
	s909(E)	18	#5	8'-6"	
**	sp901(E)	3	#7	25'-4"	
**	sp902(E)	3	#7	42'-3"	
**	sp903(E)	3	#7	17'-6"	
	u901(E)	22	#8	22'-5"	
	u902(E)	40	#9	27'-11"	
	u903(E)	12	#7	6'-9"	
	u904(E)	12	#7	6'-10"	
	u905(E)	20	#7	20'-8"	
	v901(E)	66	#14	45'-0"	
	v902(E)	66	#14	33'-10"	
	v903(E)	66	#14	42'-6"	
	v904(E)	66	#14	36'-4"	
	v905(E)	66	#14	40'-0"	
	v906(E)	66	#14	38'-10"	
	v907(E)	120	#11	36'-1"	

** Length is height of spiral.

PIER 9
BILL OF MATERIAL (CONT.)

Concrete Structures	Cu. Yd.	482.9
Reinforcement Bars, Epoxy Coated	Pound	269,680
Permanent Casing	Foot	133
Drilled Shaft in Soil	Cu. Yd.	298
Drilled Shaft in Rock	Cu. Yd.	161
Crosshole Sonic Logging Access Ducts	Foot	203
Crosshole Sonic Logging Testing	Each	3
Thermal Integrity Profile Testing	Each	3
Thermal Integrity Profile Data Collection	Foot	203

Note:
For bar details, see sheet 203 of 292 .

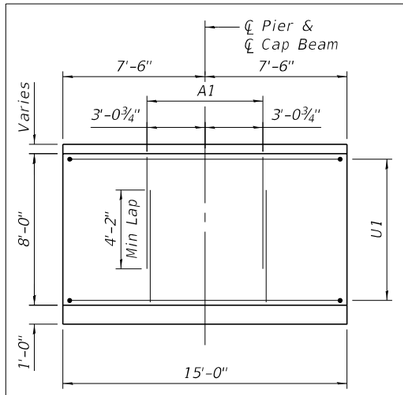

VIEW A-A

(T1 and (3) bars not shown for clarity)

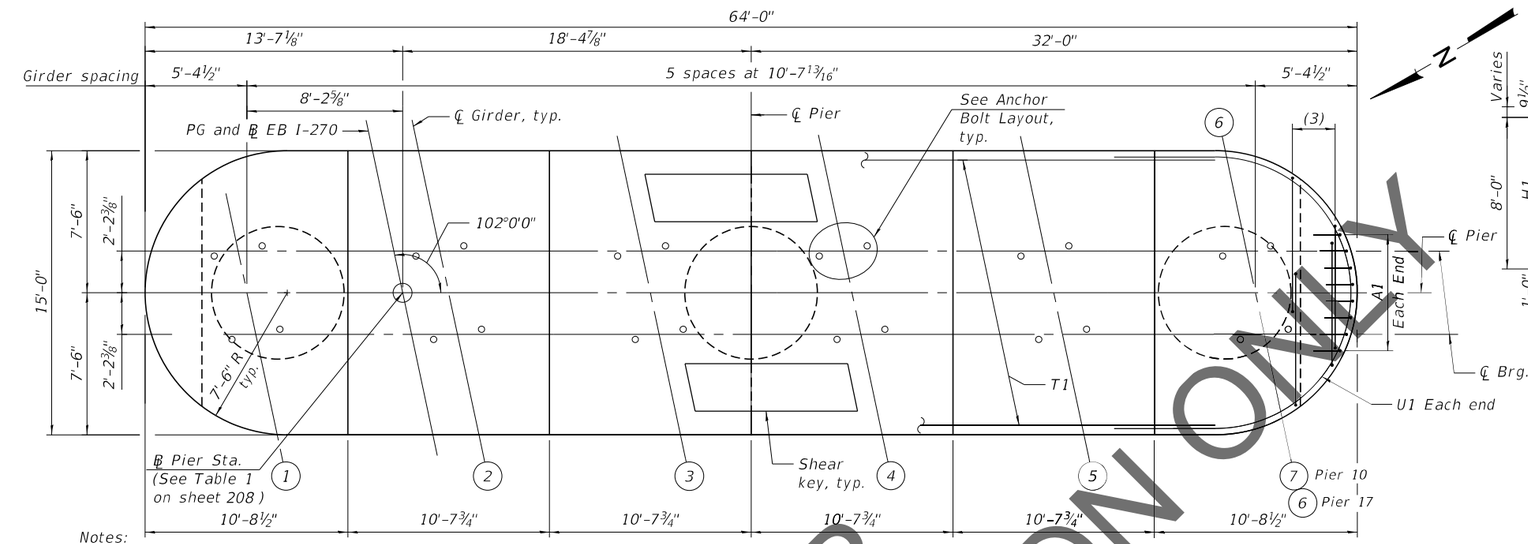

Notes:
Space reinforcement in cap to miss anchor bolts.
Pour steps monolithically with cap.

TOP PLAN

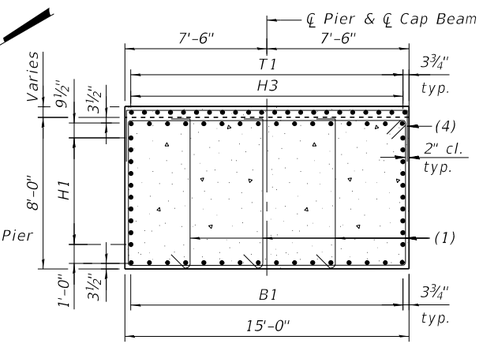

SECTION C-C

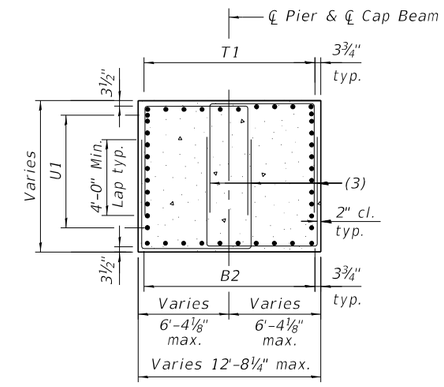

SECTION D-D

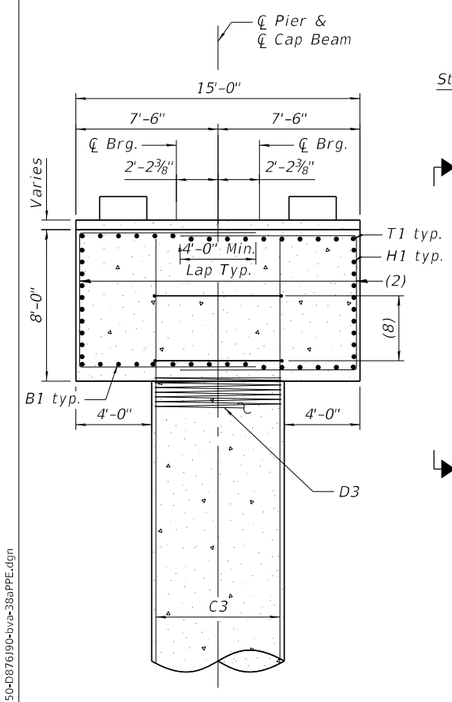

SECTION B-B

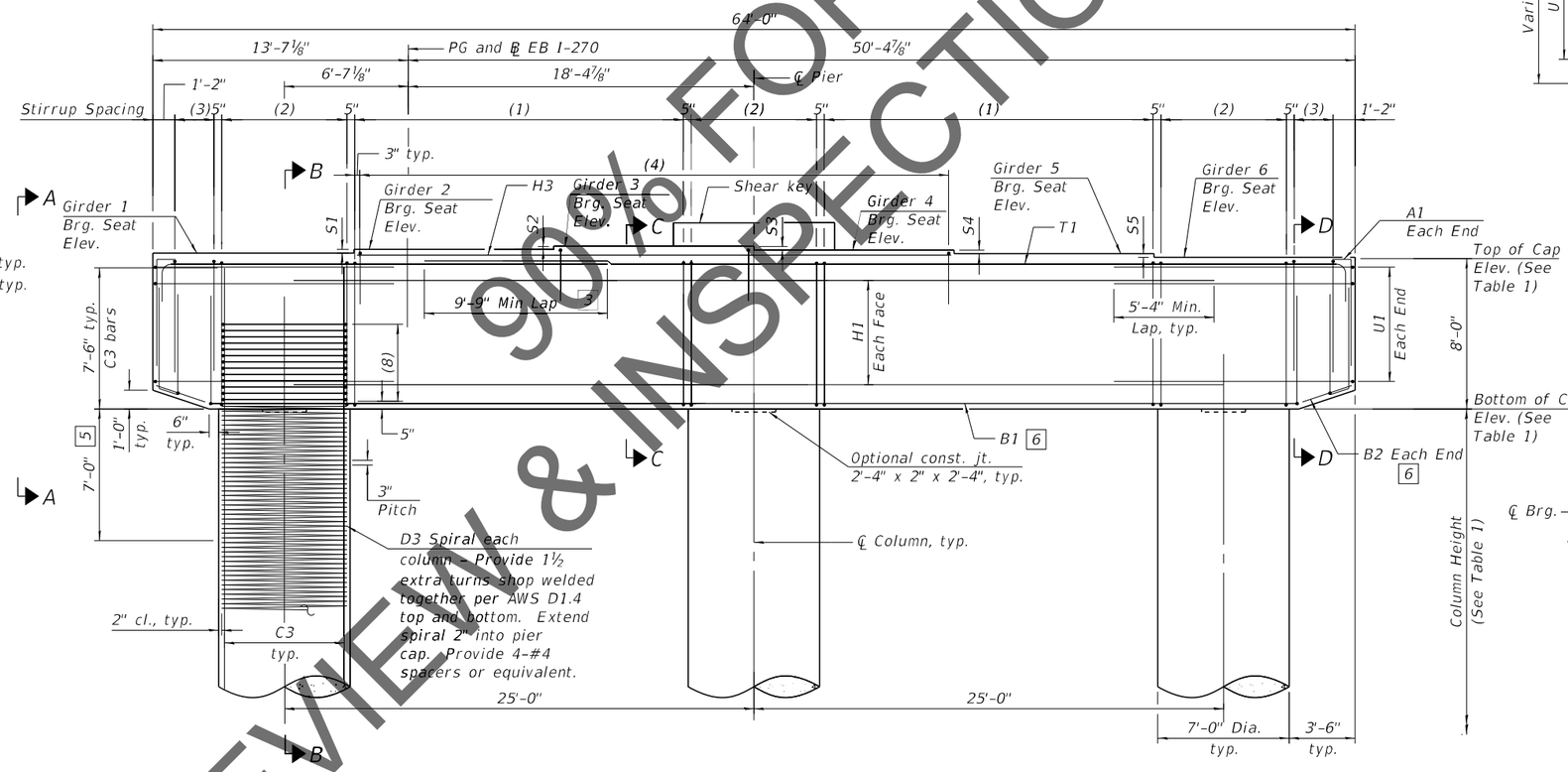

PART ELEVATION

(Looking East)

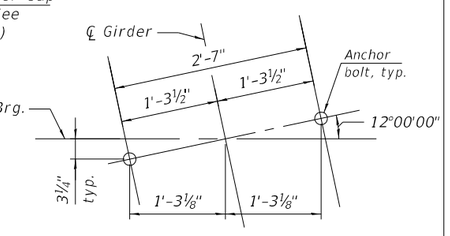

ANCHOR BOLTS LAYOUT

3 Alternate placement cap top rebars to stagger the laps

5 No splicing of bars allowed in this region.

6 Field cut bars when needed to keep 2" clear concrete cover.

Notes:
For bar details and Bill of Materials see sheets 209 and 210 of 292.
For column height, step height and all elevations, See Table 1 on sheet 208 of 292 .
For bar callouts and shear key details, see sheet 208 of 292 .
For bearing details, Unit 2, see sheet 156 of 292 .
For bearing details, Units 3 & 4, see sheet 159 of 292 .

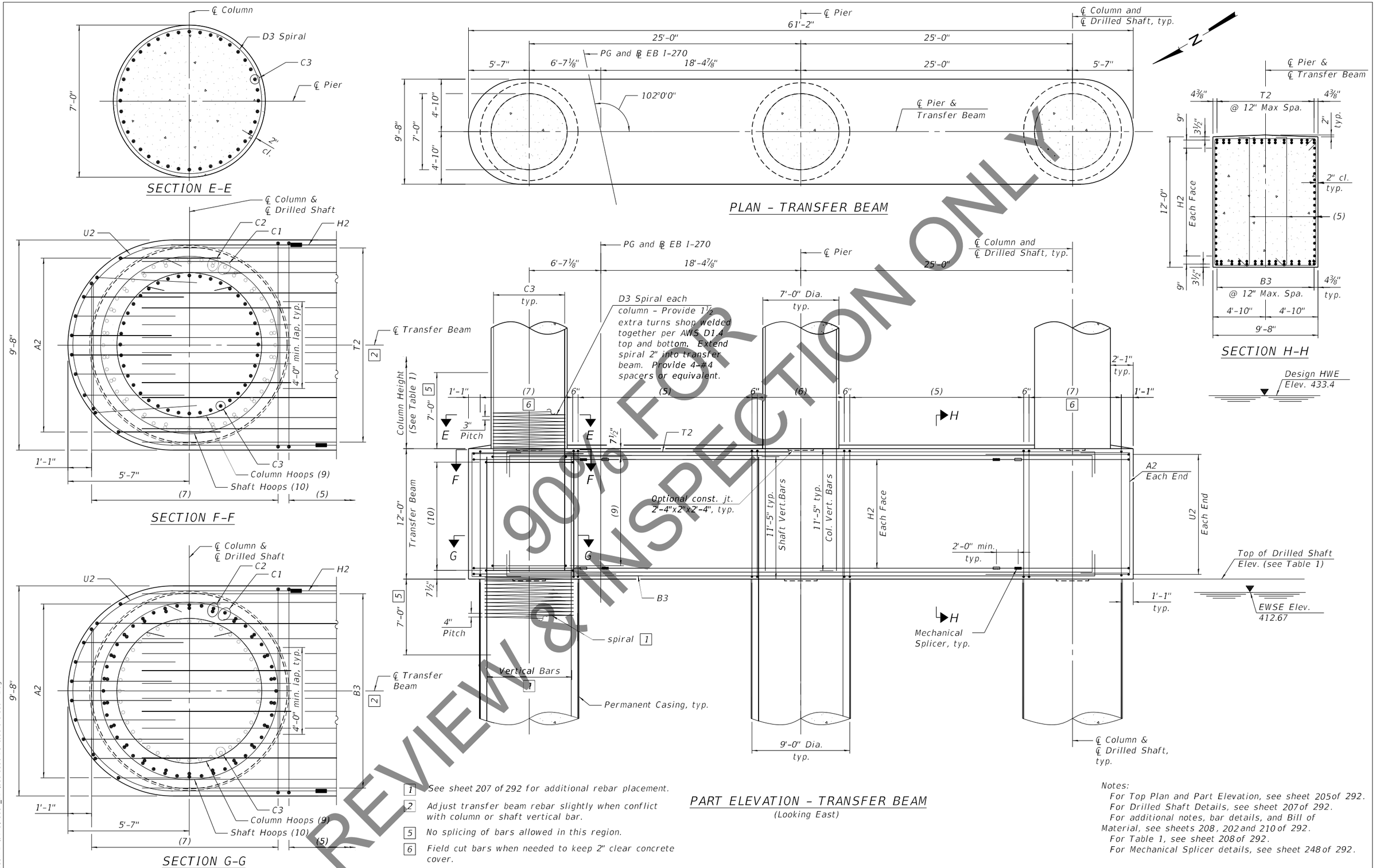

1 See sheet 207 of 292 for additional rebar placement.

2 Adjust transfer beam rebar slightly when conflict with column or shaft vertical bar.

5 No splicing of bars allowed in this region.

6 Field cut bars when needed to keep 2" clear concrete cover.

Notes:
For Top Plan and Part Elevation, see sheet 205 of 292.
For Drilled Shaft Details, see sheet 207 of 292.
For additional notes, bar details, and Bill of Material, see sheets 208, 202 and 210 of 292.
For Table 1, see sheet 208 of 292.
For Mechanical Splicer details, see sheet 248 of 292.

HORNER & SHIFRIN
Teaming with: PARSONS

USER NAME =	DESIGNED - GX	REVISED -	
	CHECKED - TMB	REVISED -	
PLOT SCALE =	DRAWN - JG	REVISED -	
PLOT DATE =	CHECKED - TMB	REVISED -	

STATE OF ILLINOIS
DEPARTMENT OF TRANSPORTATION

PIER 10 & 17 PLAN AND ELEVATION - 2
STRUCTURE NO. 060-0350 (EB)

SHEET 206 OF 292 SHEETS

F.A.I. RTE.	SECTION	COUNTY	TOTAL SHEETS	SHEET NO.
270	60B-1	MADISON	860	406
		CONTRACT NO. 76J90		
		ILLINOIS FED. AID PROJECT		

MODEL: Default
FILE NAME: C:\PCS4PDF\9175\45087_227\060-0350-D876190-bva-39aPPE.dgn
9/10/2021 4:38:12 PM

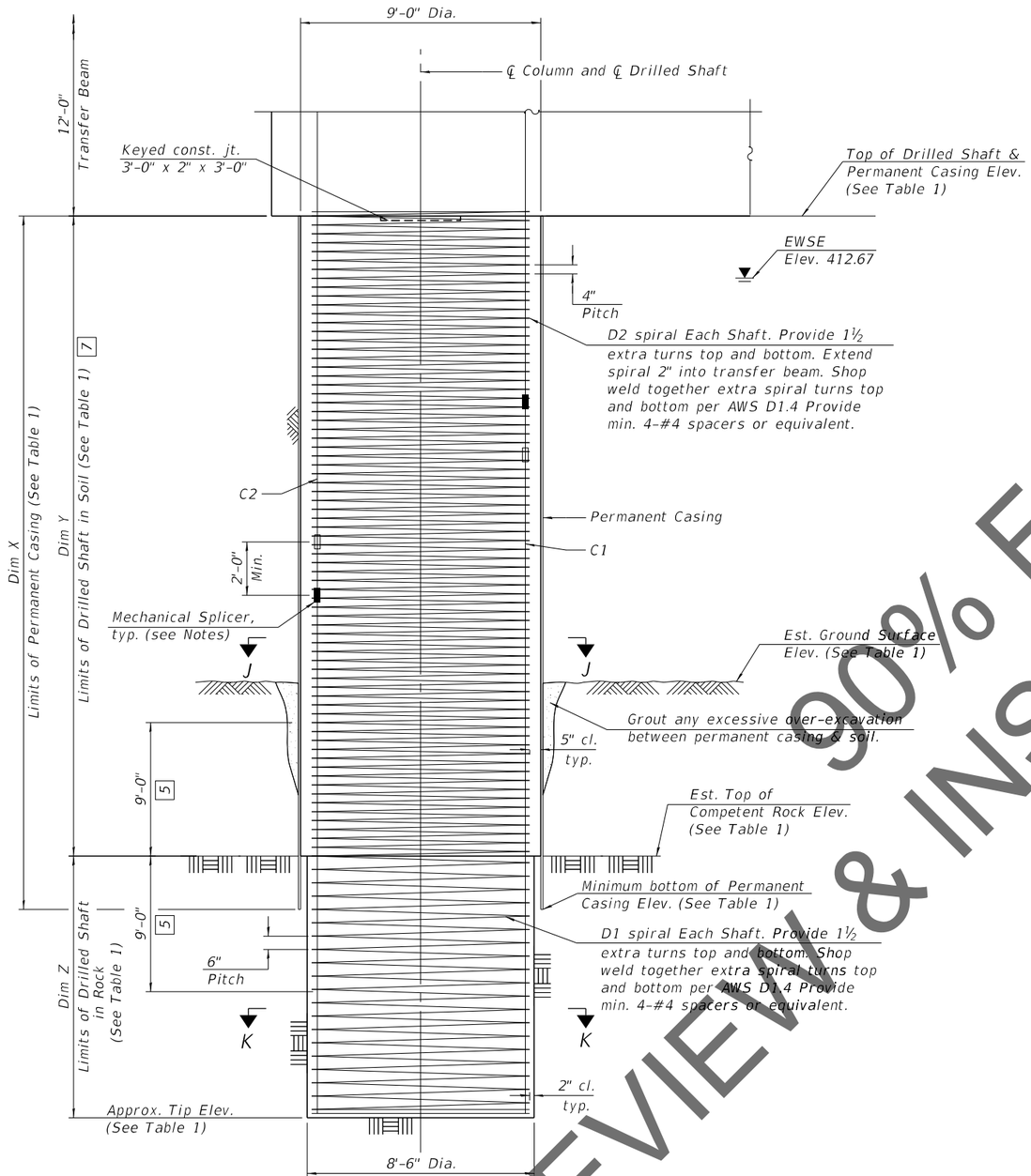

DRILLED SHAFT DETAIL

(One shaft shown, three shafts required, one under each column)

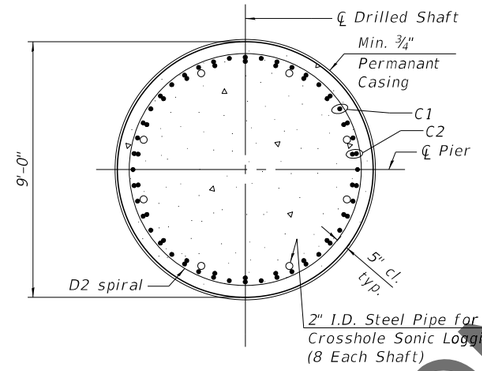

SECTION J-J

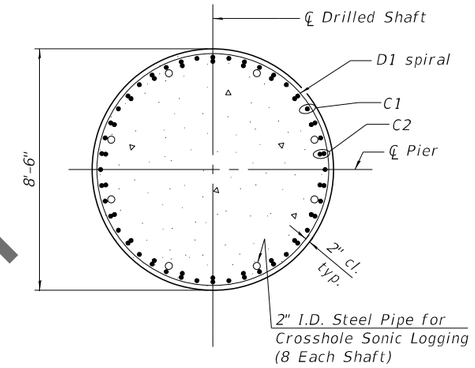

SECTION K-K

5 No splicing of bars allowed in this region.

7 If the prevailing water surface elevation during construction is consistently different than estimated on the plans, the contractor may propose an adjustment to the top of the drilled shaft elevation as part of their installation procedure. The top of all drilled shafts within a substructure unit shall be constructed to the same elevation and extend above the prevailing water surface. The quantities and reinforcement detailing are based on the top of shaft and the estimated elevations shown and may change based on the actual elevations encountered at each shaft and the final top of shaft elevation.

Notes:

For Pier Plan and Elevation, see Sheets 205 and 206 of 292.

For additional notes, bar details, and Bill of Materials, see sheets 209 and 210 of 292.

For Table 1, see sheet 208 of 292.

For Mechanical Splicer Details, see sheet 248 of 292.

The Contractor may propose a construction joint in the drilled shaft so separate pours can be made, if the shaft can be poured in the dry, subject to approval from the Engineer.

The Permanent Casing is shown embedded 2 ft. into rock for estimate of quantities. The Contractor is responsible for determining the casing thickness and the actual tip elevation to be used. See Article 516.06(d) of the Standard Specifications. Pay Limits for the Permanent Casing shall be based on the minimum length shown.

When splicing of spiral reinforcement is necessary, the spirals shall be provided with 1 ½ extra turns at the ends to be spliced. These additional turns shall either be welded together according to AWS D1.4, or shall both terminate with a 135° standard hook.

Alternate location of mechanical splices of C1 bars every other bar. Alternate location of mechanical splices of C2 bars within each bundle.

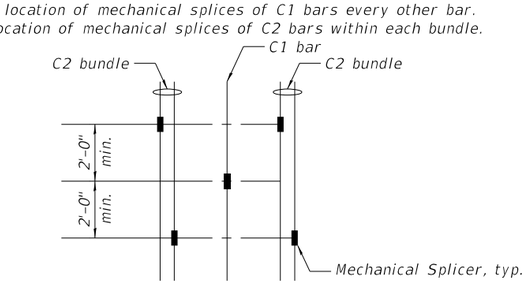

ALTERNATE MECHANICAL SPLICERS LOCATION

TABLE 1

		Pier 10	Pier 17
℄ Pier Station		1799+54.47	1815+23.47
Bearing Seat Elevation	Girder 1	454.09	452.94
	Girder 2	454.29	453.16
	Girder 3	454.45	453.35
	Girder 4	454.23	453.15
	Girder 5	454.01	452.96
	Girder 6	453.79	452.76
Top of Cap Elevation		453.79	452.76
Bottom of Cap Elevation		445.79	444.76
Column Height		18'-9⅜"	17'-9"
Top of Shaft Elevation		415.00	415.00
Approx. Tip Elevation		343.50	320.80
Est. Ground Surface Elevation		370.90	391.60
Est. Top of Rock Elevation		369.00	346.30
Min. bottom of Permament Casing Elevation		367.00	344.30
Dim X		48'-0"	70'-8⅜"
Dim Y		46'-0"	68'-8⅜"
Dim Z		25'-6"	25'-6"
S1		2 ⅜ "	2 ⅝ "
S2		1 ⅞ "	2 ¼ "
S3		2 ⅝ "	2 ⅜ "
S4		2 ⅝ "	2 ⅜ "
S5		2 ⅝ "	2 ¼ "

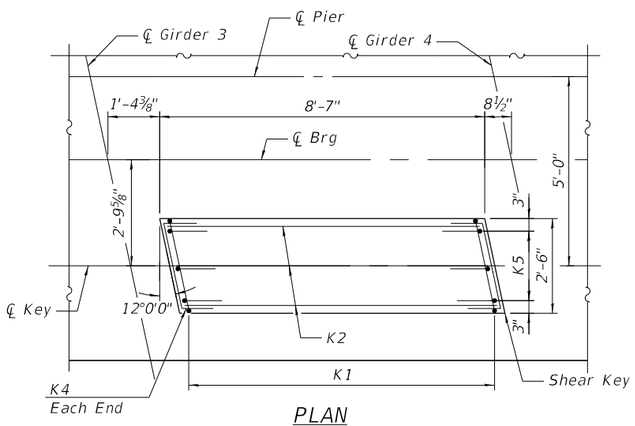

PLAN

Down station key shown.
Up station key mirrored about ℄ Pier and opposite hand.

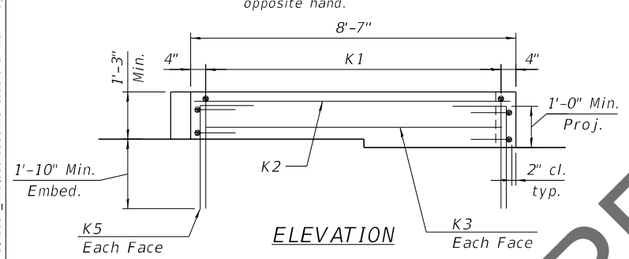

ELEVATION

SHEAR KEY DETAILS

Pier 10 / Pier 17

Mark	Bar Callouts (Pier 10)	Bar Callouts (Pier 17)
(1)	43 sets of 1-#6 s1001(E) and 3-#6 s1005(E) at 5" cts.	43 sets of 1-#6 s1701(E) and 3-#6 s1705(E) at 5" cts.
(2)	11 sets of 2-#6 s1002(E) at 8" cts.	11 sets of 2-#6 s1702(E) at 8" cts.
(3)	6 sets of 4-#6 s1007(E) at 5" cts.	6 sets of 4-#6 s1707(E) at 5" cts.
(4)	47-#6 s1008(E) at abt. 8" cts.	47-#6 s1708(E) at abt. 8" cts.
(5)	33 sets of 1-#6 s1003(E) and 2-#6 s1006(E) at 6" cts.	33 sets of 1-#6 s1703(E) and 2-#6 s1706(E) at 6" cts.
(6)	17 sets of 2-#6 s1004(E) at 6" cts	17 sets of 2-#6 s1704(E) at 6" cts
(7)	18 sets of 2-#6 s1004(E) at 6" cts.	18 sets of 2-#6 s1704(E) at 6" cts.
(8)	14-#7 hp1002(E) hoops at 3"	14-#7 hp1702(E) hoops at 3"
(9)	44-#7 hp1002(E) hoops at 3"	44-#7 hp1702(E) hoops at 3"
(10)	33-#7 hp1001(E) hoops at 4"	33-#7 hp1701(E) hoops at 4"
T1	16-#11 p1001(E) or p1002(E) at 11½"	16-#11 p1701(E) or p1702(E) at 11½"
T2	14 bundles of 1-#11 p1005(E) (top) and 1-#11 p1006(E) (bot) at 12" max	14 bundles of 1-#11 p1705(E) (top) and 1-#11 p1706(E) (bot) at 12" max
B1	16-#11 p1003(E) at 11½"	16-#11 p1703(E) at 11½"
B2	10-#7 p1004(E) at 11½"	10-#7 p1704(E) at 11½"
B3	14 bundles of 1-#11 p1005(E) (bot) and 1-#11 p1006(E) (top) at 12" max	14 bundles of 1-#11 p1705(E) (bot) and 1-#11 p1706(E) (top) at 12" max
H1	10-#8 h1001(E) at 7½"	10-#8 h1701(E) at 7½"
H2	18-#9 h1002(E) at 7"	18-#9 h1702(E) at 7"
H3	22-#6 h1003(E) at abt. 8¼"	22-#6 h1703(E) at abt. 8¼"
A1	8 sets of 1-#7 u1003(E) & 1-#7 u1004(E) at 10½"	8 sets of 1-#7 u1703(E) & 1-#7 u1704(E) at 10½"
A2	10-#7 u1005(E) at 10¾"	10-#7 u1705(E) at 10¾"
U1	11-#8 u1001(E) space with h1001(E) and p1001(E)	11-#8 u1701(E) space with h1701(E) and p1701(E)
U2	20-#9 u1002(E) splice with h1002(E) and space with p1005(E)	20-#9 u1702(E) splice with h1702(E) and space with p1705(E)
C1	22 sets of 1-#14 v1001(E) and 1-#14 v1002(E) alternate eq. spa.	22 sets of 1-#14 v1701(E) and 1-#14 v1702(E) alternate eq. spa.
C2	22 bundles of 2-#14 v1003(E) and 2-#14 v1004(E) alternate eq. spa.	22 bundles of 2-#14 v1703(E) and 2-#14 v1704(E) alternate eq. spa.
C3	40-#11 v1005(E) eq. spa.	40-#11 v1705(E) eq. spa.
D1	#7 sp1001(E) at 6" pitch	#7 sp1701(E) at 6" pitch
D2	#7 sp1002(E) at 4" pitch	#7 sp1702(E) at 4" pitch
D3	#7 sp1003(E) at 3" pitch	#7 sp1703(E) at 3" pitch
K1	20-#5 s1009(E) spa. at 5"	20-#5 s1709(E) spa. at 5"
K2	3-#5 h1004(E) space with n1001(E)	3-#5 h1704(E) space with n1701(E)
K3	1-#5 h1004(E) ea. face	1-#5 h1704(E) ea. face
K4	2-#5 h1005(E) ea. face	2-#5 h1705(E) ea. face
K5	3-#5 n1001(E) at 12" ea. face	3-#5 n1701(E) at 12" ea. face

Notes:
For Pier Plan and Elevation, see sheets 205, 206 and 207 of 292.
For bar details, see sheet 209 of 292.
For Bill of Material, see sheet 210 of 292.

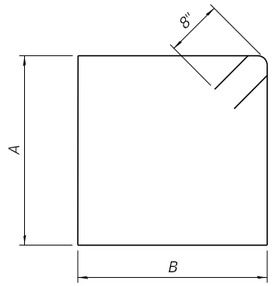

BARS s1001(E) & s1003(E)
BARS s1701(E) & s1703(E)

Bars	A	B
s1001(E) & s1701(E)	7' -8"	14' -8"
s1003(E) & s1703(E)	11' -8"	9' -4"

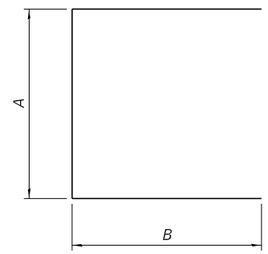

BARS s1002(E) & s1004(E) & s1007(E)
BARS s1702(E) & s1704(E) & s1707(E)

Bars	A	B
s1002(E) & s1702(E)	7' -8"	9' -4"
s1004(E) & s1704(E)	11' -8"	6' -8"
s1007(E) & s1707(E)	6' -6"	5' -10"

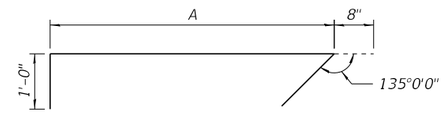

BARS s1005(E) & s1006(E)
BARS s1705(E) & s1706(E)

Bars	A
s1005(E) & s1705(E)	7' -8"
s1006(E) & s1706(E)	11' -8"

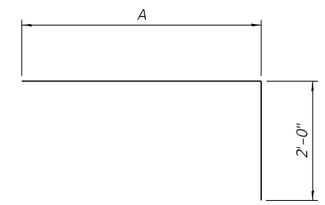

BARS p1001(E) & p1002(E)
BARS p1701(E) & p1702(E)

Bars	A
p1001(E) & p1701(E)	24' -0"
p1002(E) & p1702(E)	49' -5"

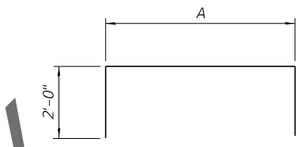

BARS p1005(E) & p1006(E)
BARS p1705(E) & p1706(E)

Bars	A
p1005(E) & p1705(E)	54' -2"
p1006(E) & p1706(E)	53' -8"

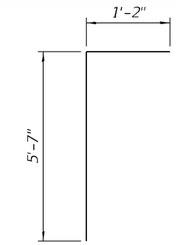

BARS u1003(E)
BARS u1703(E)

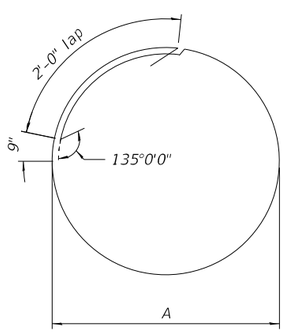

BARS hp1001(E) & hp1002(E)
BARS hp1701(E) & hp1702(E)

Bars	A
hp1001(E) & hp1701(E)	8' -2"
hp1002(E) & hp1702(E)	6' -8"

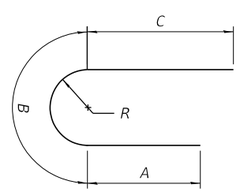

BARS u1001(E) & u1002(E)
BARS u1701(E) & u1702(E)

Bars	A	B	C	R
u1001(E) & u1701(E)	5' -4"	22' -9"	5' -4"	7' -3"
u1002(E) & u1702(E)	5' -9"	14' -5"	7' -9"	4' -7"

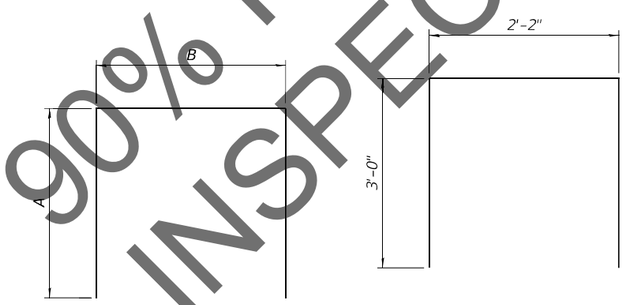

BARS u1005(E) & s1008(E)
BARS u1705(E) & s1708(E)

Bars	A	B
u1005(E) & u1705(E)	4' -7"	11' -6"
s1008(E) & s1708(E)	2' -9"	14' -8"

BARS s1009(E)
BARS s1709(E)

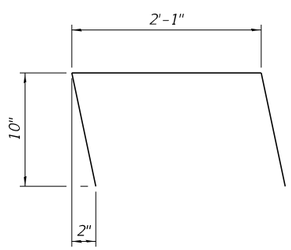

BARS h1005(E)
BARS h1705(E)

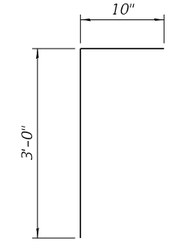

BARS n1001(E)
BARS n1701(E)

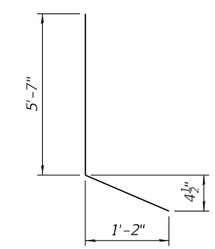

BARS u1004(E)
BARS u1704(E)

Pier 10

BILL OF MATERIAL

	Bar	No.	Size	Length	Shape
	h1001(E)	20	#8	49'-2"	
	h1002(E)	36	#9	38'-0"	
	h1003(E)	22	#6	31'-7"	
	h1004(E)	10	#5	8'-3"	
	h1005(E)	8	#5	3'-11"	
	hp1001(E)	99	#7	29'-2"	
	hp1002(E)	174	#7	24'-6"	
	n1001(E)	12	#5	3'-10"	
	p1001(E)	16	#11	26'-0"	
	p1002(E)	16	#11	51'-5"	
	p1003(E)	16	#11	57'-9"	
	p1004(E)	20	#7	2'-11"	
	p1005(E)	28	#11	58'-2"	
	p1006(E)	28	#11	57'-8"	
	s1001(E)	86	#6	46'-0"	
	s1002(E)	66	#6	26'-4"	
	s1003(E)	66	#6	43'-4"	
	s1004(E)	106	#6	25'-0"	
	s1005(E)	258	#6	9'-4"	
	s1006(E)	132	#6	13'-4"	
	s1007(E)	48	#6	18'-2"	
	s1008(E)	47	#6	20'-2"	
	s1009(E)	40	#5	8'-2"	
***	sp1001(E)	3	#7	24'-6"	
***	sp1002(E)	3	#7	47'-2"	
***	sp1003(E)	3	#7	19'-2"	
	u1001(E)	22	#8	33'-5"	
	u1002(E)	40	#9	27'-11"	
	u1003(E)	16	#7	6'-9"	
	u1004(E)	16	#7	6'-10"	
	u1005(E)	20	#7	20'-8"	
	v1001(E)	66	#14	42'-9"	
	v1002(E)	66	#14	40'-0"	
	v1003(E)	132	#14	35'-0"	
	v1004(E)	132	#14	47'-9"	
	v1005(E)	120	#11	37'-9"	

Concrete Structures	Cu. Yd.	619.5
Reinforcement Bars, Epoxy Coated	Pound	275,760
Permanent Casing	Foot	144
Drilled Shaft in Soil	Cu. Yd.	326
Drilled Shaft in Rock	Cu. Yd.	161
Concrete Sealer	Sq. Ft.	6,257
Crosshole Sonic Logging Access Ducts	Foot	215
Crosshole Sonic Logging Testing	Each	3
Thermal Integrity Profile Data Collection	Foot	215
Thermal Integrity Profile Testing	Each	3

*** Length is height of spiral.

Pier 17

BILL OF MATERIAL

	Bar	No.	Size	Length	Shape
	h1701(E)	20	#8	49'-2"	
	h1702(E)	36	#9	38'-0"	
	h1703(E)	22	#6	31'-7"	
	h1704(E)	10	#5	8'-3"	
	h1705(E)	8	#5	3'-11"	
	hp1701(E)	99	#7	29'-2"	
	hp1702(E)	174	#7	24'-6"	
	n1701(E)	12	#5	3'-10"	
	p1701(E)	16	#11	26'-0"	
	p1702(E)	16	#11	51'-5"	
	p1703(E)	16	#11	57'-9"	
	p1704(E)	20	#7	2'-11"	
	p1705(E)	28	#11	58'-2"	
	p1706(E)	28	#11	57'-8"	
	s1701(E)	86	#6	46'-0"	
	s1702(E)	66	#6	26'-4"	
	s1703(E)	66	#6	43'-4"	
	s1704(E)	106	#6	25'-0"	
	s1705(E)	258	#6	9'-4"	
	s1706(E)	132	#6	13'-4"	
	s1707(E)	48	#6	18'-2"	
	s1708(E)	47	#6	20'-2"	
	s1709(E)	40	#5	8'-2"	
***	sp1701(E)	3	#7	24'-6"	
***	sp1702(E)	3	#7	69'-11"	
***	sp1703(E)	3	#7	18'-1"	
	u1701(E)	22	#8	33'-5"	
	u1702(E)	40	#9	27'-11"	
	u1703(E)	16	#7	6'-9"	
	u1704(E)	16	#7	6'-10"	
	u1705(E)	20	#7	20'-8"	
	v1701(E)	66	#14	51'-5"	
	v1702(E)	66	#14	54'-1"	
	v1703(E)	132	#14	46'-5"	
	v1704(E)	132	#14	59'-1"	
	v1705(E)	120	#11	36'-9"	

Concrete Structures	Cu. Yd.	613
Reinforcement Bars, Epoxy Coated	Pound	319,720
Permanent Casing	Foot	213
Drilled Shaft in Soil	Cu. Yd.	486
Drilled Shaft in Rock	Cu. Yd.	161
Concrete Sealer	Sq. Ft.	6,180
Crosshole Sonic Logging Access Ducts	Foot	283
Crosshole Sonic Logging Testing	Each	3
Thermal Integrity Profile Data Collection	Foot	283
Thermal Integrity Profile Testing	Each	3

*** Length is height of spiral.

Notes:

For Pier Plan and Elevation, see sheets 205 thru 207 of 292.

For additional bar details, see sheets 208 and 209 of 292.

Pier 10 & 17 vertical load drilled shaft foundation design is based on side resistance in bedrock. For vertical load design, penetration into rock is required to achieve the factored resistance used in design (12,242 kip). The limits shown for drilled shaft in rock is the minimum penetration required to achieve lateral fixity in rock for lateral load design.

The quantities and reinforcement detailing are based on the estimated top of competent rock and the estimated elevations shown and may change based on the actual elevations encountered at each shaft.

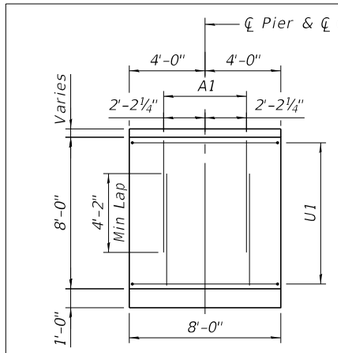

VIEW A-A

(T1 and (3) bars not shown for clarity)

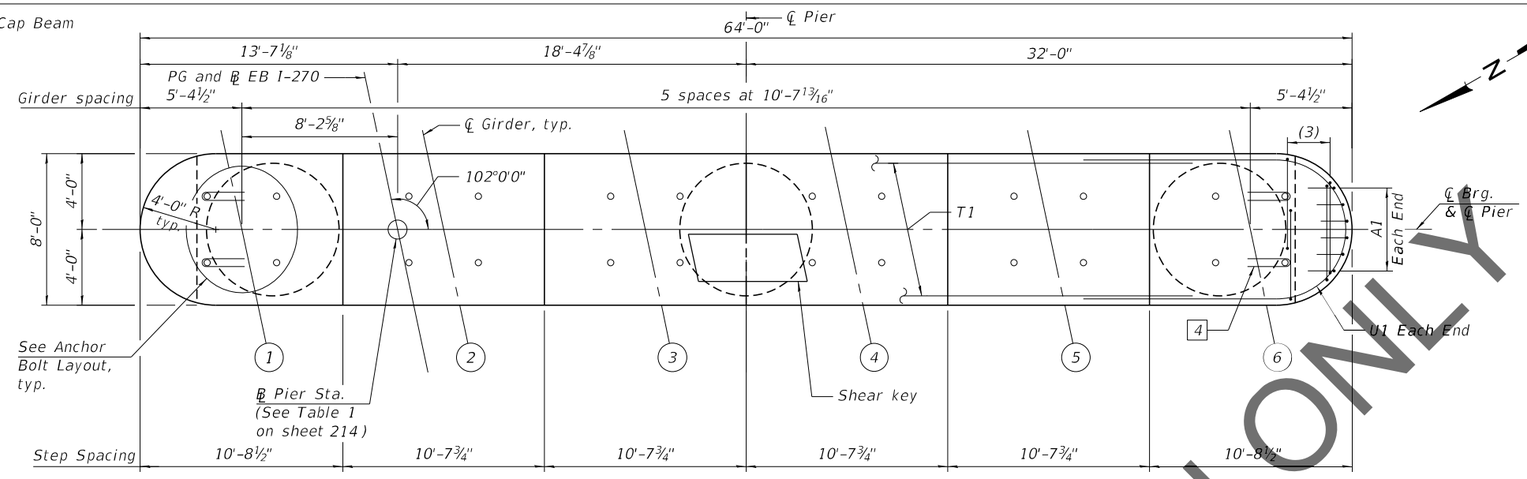

TOP PLAN

Notes:
Space reinforcement in cap to miss anchor bolts.
Pour steps monolithically with cap.

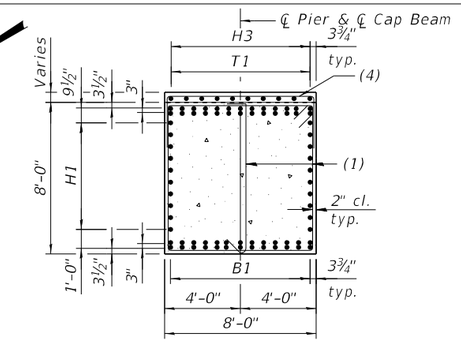

SECTION C-C

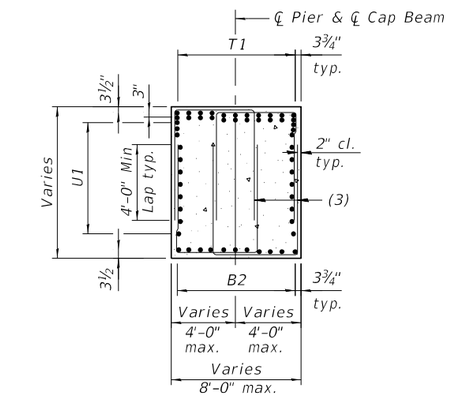

SECTION D-D

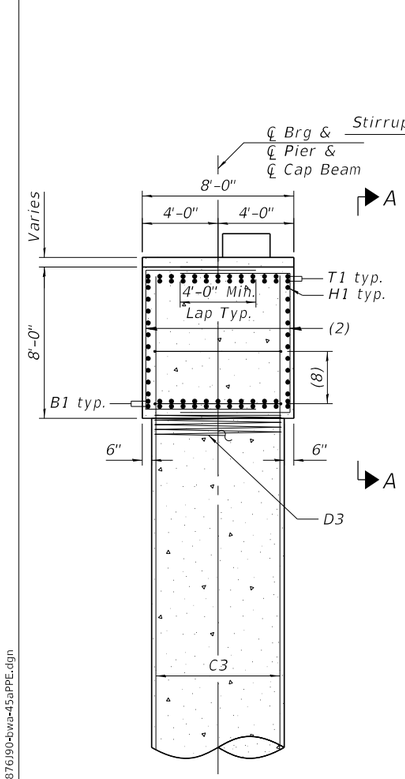

SECTION B-B

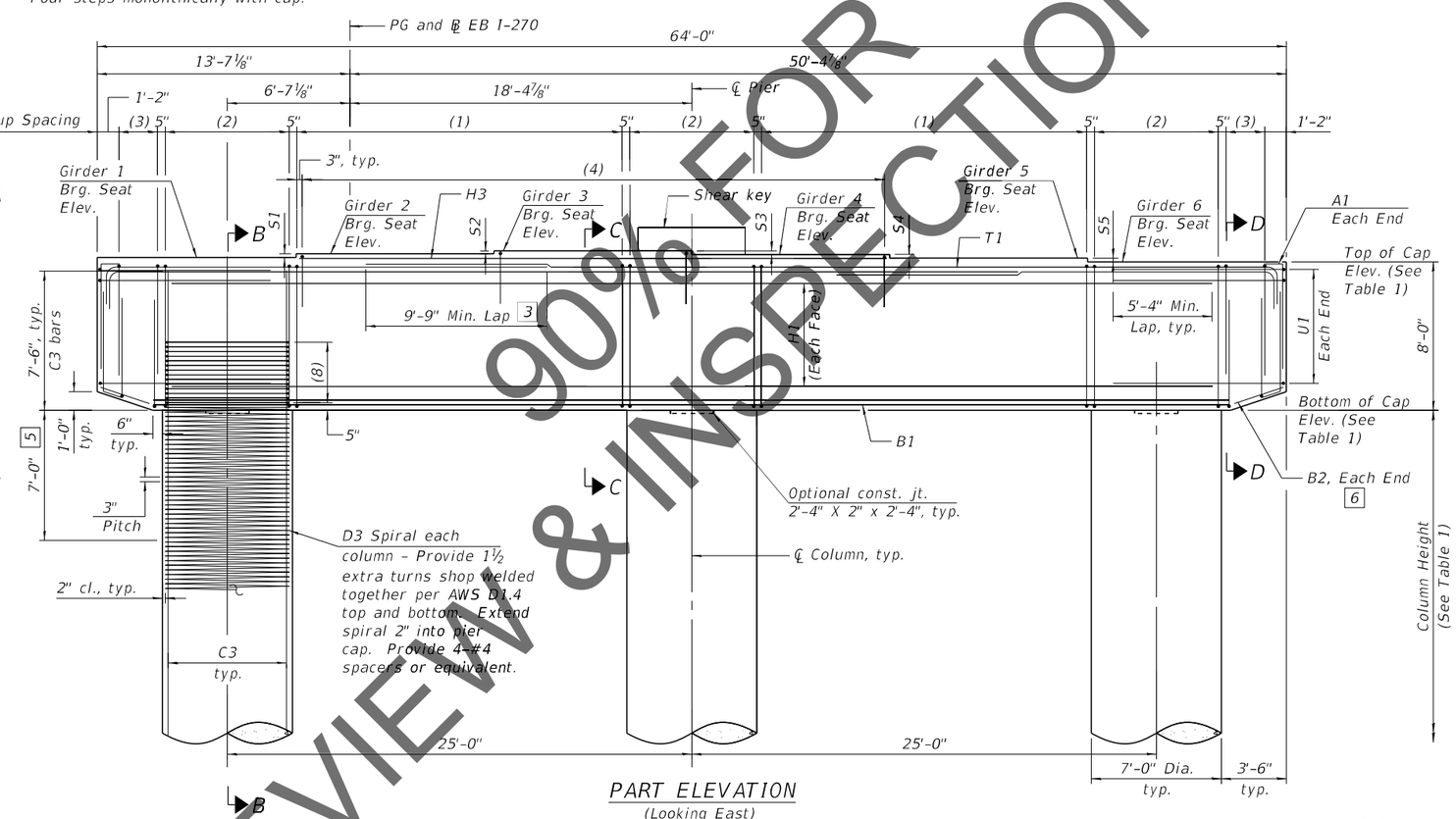

PART ELEVATION

(Looking East)

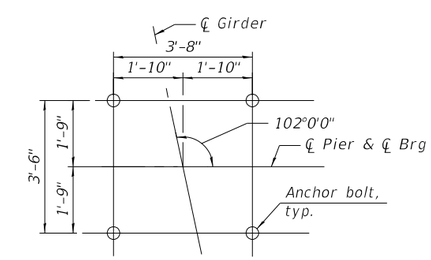

ANCHOR BOLTS LAYOUT

3 Alternate placement cap top rebars to stagger the laps

4 Provide 2 - R bar at each anchor shown. Place first R bar with top mat reinforcement and second R bar 6" below top U bar

5 No splicing of bars allowed in this region.

6 Field cut bars when needed to keep 2" clear concrete cover.

Notes:
For bar details and Bill of Materials see sheets 215 and 216 of 292.
For column height, step height and all Elevations, See Table 1 on sheet 214 of 292.
For bearing details, see sheet 161 of 292.
For bar callouts and shear key details, see sheet 214 of 292.

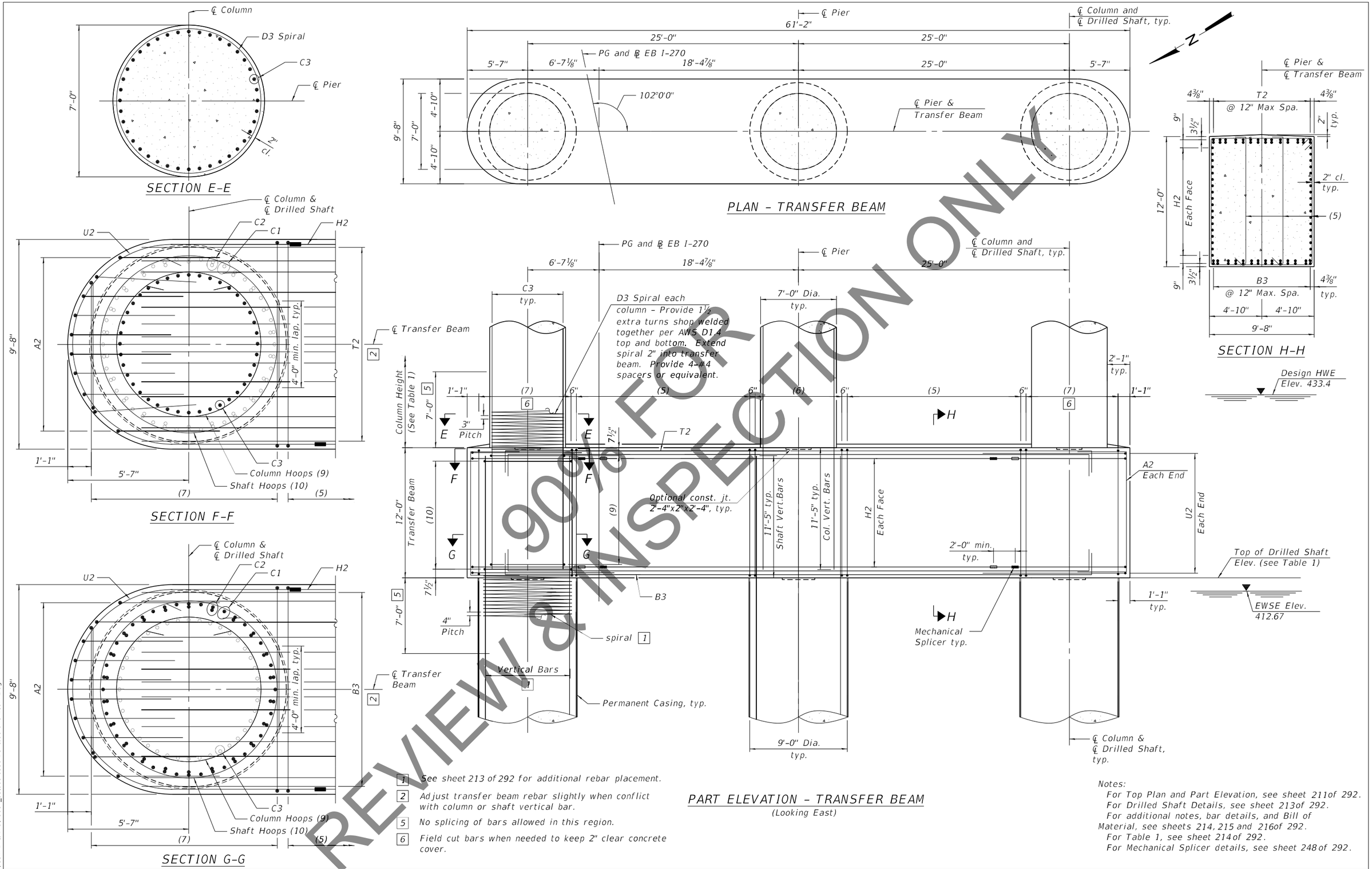

1 See sheet 213 of 292 for additional rebar placement.

2 Adjust transfer beam rebar slightly when conflict with column or shaft vertical bar.

5 No splicing of bars allowed in this region.

6 Field cut bars when needed to keep 2" clear concrete cover.

PART ELEVATION - TRANSFER BEAM

(Looking East)

Notes:

For Top Plan and Part Elevation, see sheet 211 of 292.
For Drilled Shaft Details, see sheet 213 of 292.
For additional notes, bar details, and Bill of Material, see sheets 214, 215 and 216 of 292.
For Table 1, see sheet 214 of 292.
For Mechanical Splicer details, see sheet 248 of 292.

MODEL: Default
FILE NAME: C:\PCS4PDF\9175\45087_68\060-0350-0876J90-bwa-46aPPE.dgn

HORNER & SHIFRIN
Teaming with: PARSONS

USER NAME =	DESIGNED - GX	REVISED -	
	CHECKED - TMB	REVISED -	
PLOT SCALE =	DRAWN - JG	REVISED -	
PLOT DATE =	CHECKED - TMB	REVISED -	

STATE OF ILLINOIS
DEPARTMENT OF TRANSPORTATION

PIER 11 & 16 PLAN AND ELEVATION - 2
STRUCTURE NO. 060-0350 (EB)

SHEET 212 OF 292 SHEETS

F.A.I. RTE.	SECTION	COUNTY	TOTAL SHEETS	SHEET NO.
270	60B-1	MADISON	860	412
		CONTRACT NO. 76J90		
		ILLINOIS FED. AID PROJECT		

9/10/2021 4:43:01 PM

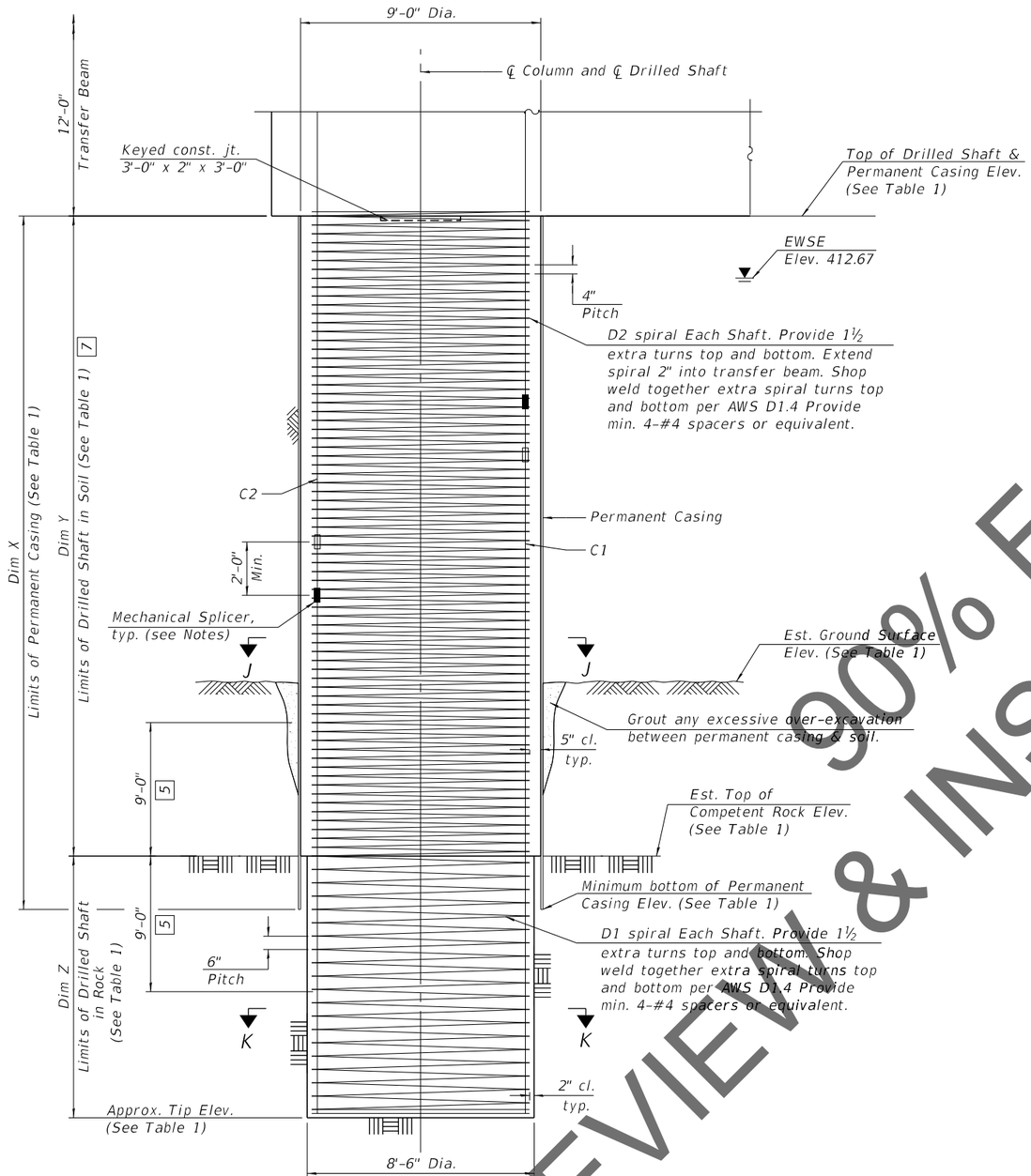

DRILLED SHAFT DETAIL

(One shaft shown, three shafts required, one under each column)

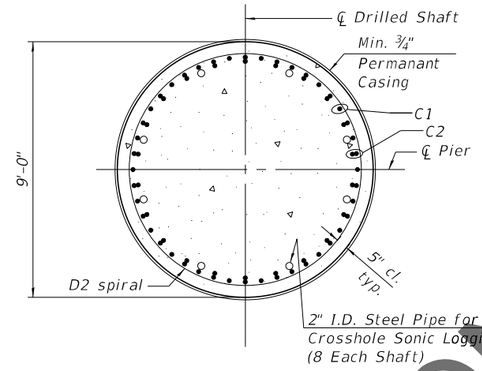

SECTION J-J

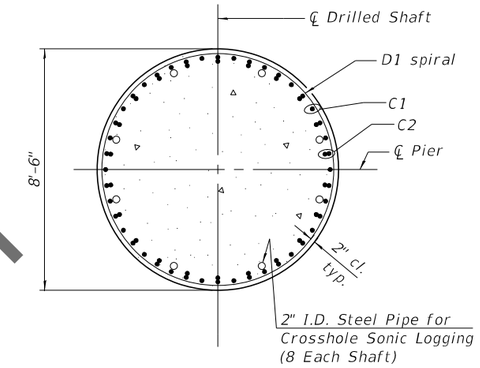

SECTION K-K

5 No splicing of bars allowed in this region.

7 If the prevailing water surface elevation during construction is consistently different than estimated on the plans, the contractor may propose an adjustment to the top of the drilled shaft elevation as part of their installation procedure. The top of all drilled shafts within a substructure unit shall be constructed to the same elevation and extend above the prevailing water surface. The quantities and reinforcement detailing are based on the top of shaft and the estimated elevations shown and may change based on the actual elevations encountered at each shaft and the final top of shaft elevation.

Notes:

For Pier Plan and Elevation, see Sheets 211 and 212 of 292.

For additional notes, bar details, and Bill of Materials, see sheets 215 and 216 of 292.

For Table 1, see sheet 214 of 292.

For Mechanical Splicer Details, see sheet 248 of 292.

The Contractor may propose a construction joint in the drilled shaft so separate pours can be made, if the shaft can be poured in the dry, subject to approval from the Engineer.

The Permanent Casing is shown embedded 2 ft. into rock for estimate of quantities. The Contractor is responsible for determining the casing thickness and the actual tip elevation to be used. See Article 516.06(d) of the Standard Specifications. Pay Limits for the Permanent Casing shall be based on the minimum length shown.

When splicing of spiral reinforcement is necessary, the spirals shall be provided with 1 ½ extra turns at the ends to be spliced. These additional turns shall either be welded together according to AWS D1.4, or shall both terminate with a 135° standard hook.

Alternate location of mechanical splices of C1 bars every other bar. Alternate location of mechanical splices of C2 bars within each bundle.

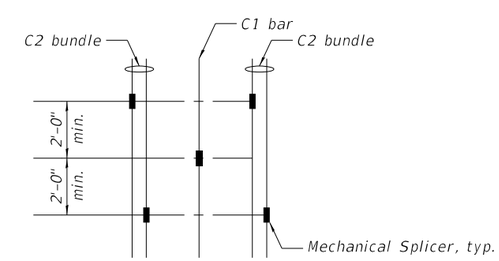

ALTERNATE MECHANICAL SPLICERS LOCATION

TABLE 1

		Pier 11	Pier 16
℄ Pier Station		1801+48.97	1813+28.97
Bearing Seat Elevation	Girder 1	454.77	453.65
	Girder 2	454.97	453.87
	Girder 3	455.13	454.05
	Girder 4	454.91	453.86
	Girder 5	454.70	453.66
	Girder 6	454.48	453.46
Top of Cap Elevation		454.48	453.46
Bottom of Cap Elevation		446.48	445.46
Column Height		19'-5¾"	18'-5½"
Top of Shaft Elevation		415.00	415.00
Approx. Tip Elevation		338.70	322.10
Est. Ground Surface Elevation		366.90	376.80
Est. Top of Rock Elevation		364.20	347.60
Min. bottom of Permament Casing Elevation		362.20	345.60
Dim X		52'-9½"	69'-4¾"
Dim Y		50'-9½"	67'-4¾"
Dim Z		25'-6"	25'-6"
S1		2 ⅜ "	2 ⅝ "
S2		1 ⅞ "	2 ⅛ "
S3		2 ⅝ "	2 ¼ "
S4		2 ½ "	2 ⅜ "
S5		2 ⅝ "	2 ⅜ "

Pier 11 / Pier 16

Mark	Bar Callouts (Pier 11)	Bar Callouts (Pier 16)
(1)	43 sets of 1-#6 s1101(E) and 1-#6 s1105(E) at 5" cts.	43 sets of 1-#6 s1601(E) and 1-#6 s1605(E) at 5" cts.
(2)	11 sets of 2-#6 s1102(E) at 8" cts.	11 sets of 2-#6 s1602(E) at 8" cts.
(3)	6 sets of 4-#6 s1107(E) at 5" cts.	6 sets of 4-#6 s1607(E) at 5" cts.
(4)	47-#6 s1108(E) at abt. 8" cts.	47-#6 s1608(E) at abt. 8" cts.
(5)	33 sets of 1-#6 s1103(E) and 2-#6 s1106(E) at 6" cts.	33 sets of 1-#6 s1603(E) and 2-#6 s1606(E) at 6" cts.
(6)	17 sets of 2-#6 s1104(E) at 6" cts	17 sets of 2-#6 s1604(E) at 6" cts
(7)	18 sets of 2-#6 s1104(E) at 6" cts.	18 sets of 2-#6 s1604(E) at 6" cts.
(8)	14-#7 hp1102(E) hoops at 3"	14-#7 hp1602(E) hoops at 3"
(9)	44-#7 hp1102(E) hoops at 3"	44-#7 hp1602(E) hoops at 3"
(10)	33-#7 hp1101(E) hoops at 4"	33-#7 hp1601(E) hoops at 4"
T1	2 layers of 13-#11 p1101(E) or p1102(E) at 7⅜"	2 layers of 13-#11 p1601(E) or p1602(E) at 7⅜"
T2	14 bundles of 1-#11 p1105(E) (top) and 1-#11 p1106(E) (bot) at 12" max	14 bundles of 1-#11 p1605(E) (top) and 1-#11 p1606(E) (bot) at 12" max
B1	2 layers of 13-#11 p1103(E) at 7⅜"	2 layers of 13-#11 p1603(E) at 7⅜"
B2	11-#7 p1104(E) at 7⅜"	11-#7 p1604(E) at 7⅜"
B3	14 bundles of 1-#11 p1105E (bot) and 1-#11 p1106(E) (top) at 12" max	14 bundles of 1-#11 p1605(E) (bot) and 1-#11 p1606(E) (top) at 12" max
H1	10-#8 h1101(E) at 7½"	10-#8 h1601(E) at 7½"
H2	18-#9 h1102(E) at 7"	18-#9 h1602(E) at 7"
H3	10-#6 h1103(E) at abt. 9¾"	10-#6 h1603(E) at abt. 9¾"
A1	6 sets of 1-#7 u1103(E) & 1-#7 u1104(E) at 10½"	6 sets of 1-#7 u1603(E) & 1-#7 u1604(E) at 10½"
A2	10-#7 u1105(E) at 10¾"	10-#7 u1605(E) at 10¾"
U1	11-#8 u1101(E) space with h1101(E) and p1101(E)	11-#8 u1601(E) space with h1601(E) and p1601(E)
U2	20-#9 u1102(E) splice with h1102(E) and space with p1105(E)	20-#9 u1602(E) splice with h1602(E) and space with p1605(E)
C1	22 sets of 1-#14 v1101(E) and 1-#14 v1102(E) alternate eq. spa.	22 sets of 1-#14 v1601(E) and 1-#14 v1602(E) alternate eq. spa.
C2	22 bundles of 2-#14 v1103(E) and 2-#14 v1104(E) alternate eq. spa.	22 bundles of 2-#14 v1603(E) and 2-#14 v1604(E) alternate eq. spa.
C3	40-#11 v1105(E) eq. spa.	40-#11 v1605(E) eq. spa.
D1	#7 sp1101(E) at 6" pitch	#7 sp1601(E) at 6" pitch
D2	#7 sp1102(E) at 4" pitch	#7 sp1602(E) at 4" pitch
D3	#7 sp1103(E) at 3" pitch	#7 sp1603(E) at 3" pitch
K1	13-#5 s1109(E) spa. at 5"	13-#5 s1609(E) spa. at 5"
K2	3-#5 h1104(E) space with n1101(E)	3-#5 h1604(E) space with n1601(E)
K3	1-#5 h1104(E) ea. face	1-#5 h1604(E) ea. face
K4	2-#5 h1105(E) ea. face	2-#5 h1605(E) ea. face
K5	3-#5 n1101(E) at 12" ea. face	3-#5 n1601(E) at 12" ea. face
R	#5 s1110(E)	#5 s1610(E)

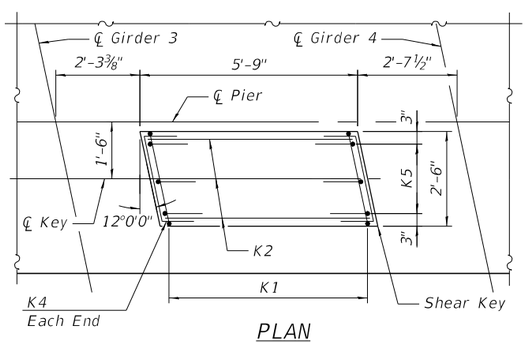

PLAN

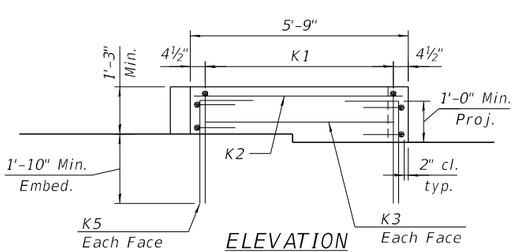

ELEVATION

SHEAR KEY DETAILS

Notes:
For Pier Plan and Elevation, see sheets 211, 212 and 213 of 292 .
For bar details, see sheet 215 of 292 .
For Bill of Material, see sheet 216 of 292 .

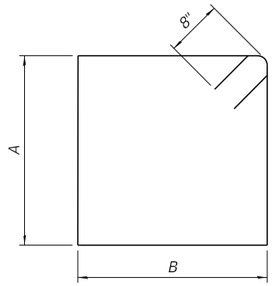

BARS s1101(E) & s1103(E)
BARS s1601(E) & s1603(E)

Bars	A	B
s1101(E) & s1601(E)	7' -8"	7' -8"
s1103(E) & s1603(E)	11' -8"	9' -4"

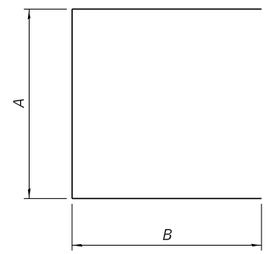

BARS s1102(E) & s1104(E) & s1107(E)
BARS s1602(E) & s1604(E) & s1607(E)

Bars	A	B
s1102(E) & s1602(E)	7' -8"	5' -10"
s1104(E) & s1604(E)	11' -8"	6' -8"
s1107(E) & s1607(E)	4' -10"	5' -10"

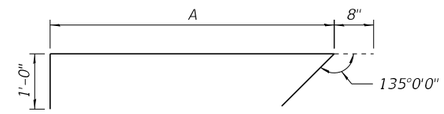

BARS s1105(E) & s1106(E)
BARS s1605(E) & s1606(E)

Bars	A
s1105(E) & s1605(E)	7' -8"
s1106(E) & s1606(E)	11' -8"

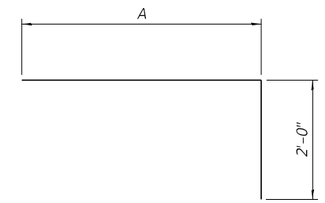

BARS p1101(E) & p1102(E)
BARS p1601(E) & p1602(E)

Bars	A
p1101(E) & p1601(E)	24' -0"
p1102(E) & p1602(E)	49' -5"

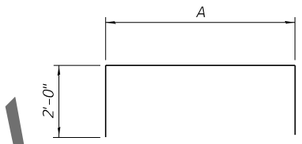

BARS p1105(E) & p1106(E)
BARS p1605(E) & p1606(E)

Bars	A
p1105(E) & p1605(E)	54' -2"
p1106(E) & p1606(E)	53' -8"

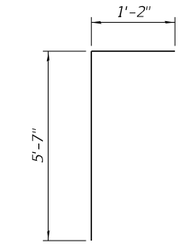

BARS u1103(E)
BARS u1603(E)

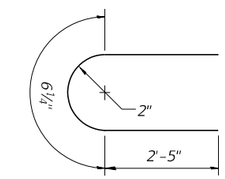

BARS s1110(E)
BARS s1610(E)

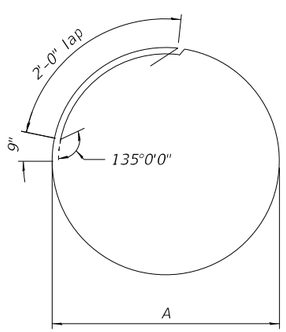

BARS hp1101(E) & hp1102(E)
BARS hp1601(E) & hp1602(E)

Bars	A
hp1101(E) & hp1601(E)	8' -2"
hp1102(E) & hp1602(E)	6' -8"

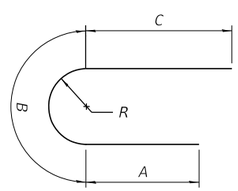

BARS u1101(E) & u1102(E)
BARS u1601(E) & u1602(E)

Bars	A	B	C	R
u1101(E) & u1601(E)	5' -4"	11' -9"	5' -4"	3' -9"
u1102(E) & u1602(E)	5' -9"	14' -5"	7' -9"	4' -7"

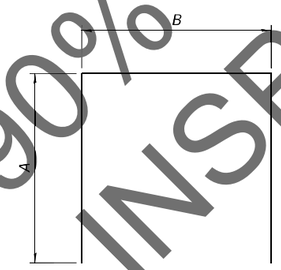

BARS u1105(E) & s1108(E)
BARS u1605(E) & s1608(E)

Bars	A	B
u1105(E) & u1605(E)	4' -7"	11' -6"
s1108(E) & s1608(E)	2' -9"	7' -8"

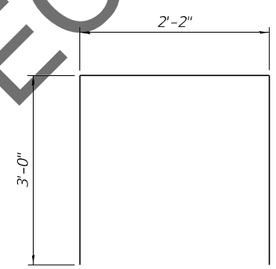

BARS s1109(E)
BARS s1609(E)

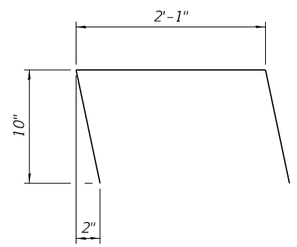

BARS h1105(E)
BARS h1605(E)

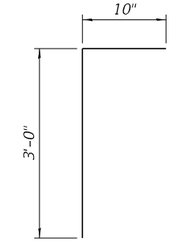

BARS n1101(E)
BARS n1601(E)

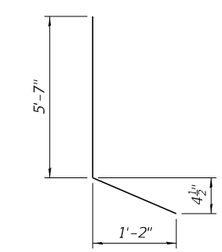

BARS u1104(E)
BARS u1604(E)

Pier 11

BILL OF MATERIAL

	Bar	No.	Size	Length	Shape
	h1101(E)	20	#8	56'-2"	
	h1102(E)	36	#9	38'-0"	
	h1103(E)	10	#6	31'-7"	
	h1104(E)	5	#5	5'-5"	
	h1105(E)	4	#5	3'-11"	
	hp1101(E)	99	#7	29'-2"	
	hp1102(E)	174	#7	24'-6"	
	n1101(E)	6	#5	3'-10"	
	p1101(E)	26	#11	26'-0"	
	p1102(E)	26	#11	51'-5"	
	p1103(E)	26	#11	57'-9"	
	p1104(E)	22	#7	2'-11"	
	p1105(E)	28	#11	58'-2"	
	p1106(E)	28	#11	57'-8"	
	s1101(E)	86	#6	32'-0"	
	s1102(E)	66	#6	19'-4"	
	s1103(E)	66	#6	43'-4"	
	s1104(E)	106	#6	25'-0"	
	s1105(E)	86	#6	9'-4"	
	s1106(E)	132	#6	13'-4"	
	s1107(E)	48	#6	16'-6"	
	s1108(E)	47	#6	13'-2"	
	s1109(E)	13	#5	8'-2"	
	s1110(E)	8	#5	5'-5"	
***	sp1101(E)	3	#7	24'-6"	
***	sp1102(E)	3	#7	52'-0"	
***	sp1103(E)	3	#7	19'-10"	
	u1101(E)	22	#8	22'-5"	
	u1102(E)	40	#9	27'-11"	
	u1103(E)	12	#7	6'-9"	
	u1104(E)	12	#7	6'-10"	
	u1105(E)	20	#7	20'-8"	
	v1101(E)	66	#14	42'-6"	
	v1102(E)	66	#14	45'-1"	
	v1103(E)	132	#14	40'-0"	
	v1104(E)	132	#14	47'-7"	
	v1105(E)	120	#11	38'-5"	

Concrete Structures	Cu. Yd.	492.9
Reinforcement Bars, Epoxy Coated	Pound	283,520
Permanent Casing	Foot	159
Drilled Shaft in Soil	Cu. Yd.	360
Drilled Shaft in Rock	Cu. Yd.	161
Crosshole Sonic Logging Access Ducts	Foot	229
Crosshole Sonic Logging Testing	Each	3
Thermal Integrity Profile Data Collection	Foot	229
Thermal Integrity Profile Testing	Each	3

*** Length is height of spiral.

Pier 16

BILL OF MATERIAL

	Bar	No.	Size	Length	Shape
	h1601(E)	20	#8	56'-2"	
	h1602(E)	36	#9	38'-0"	
	h1603(E)	10	#6	31'-7"	
	h1604(E)	5	#5	5'-5"	
	h1605(E)	4	#5	3'-11"	
	hp1601(E)	99	#7	29'-2"	
	hp1602(E)	174	#7	24'-6"	
	n1601(E)	6	#5	3'-10"	
	p1601(E)	26	#11	26'-0"	
	p1602(E)	26	#11	51'-5"	
	p1603(E)	26	#11	57'-9"	
	p1604(E)	22	#7	2'-11"	
	p1605(E)	28	#11	58'-2"	
	p1606(E)	28	#11	57'-8"	
	s1601(E)	86	#6	32'-0"	
	s1602(E)	66	#6	19'-4"	
	s1603(E)	66	#6	43'-4"	
	s1604(E)	106	#6	25'-0"	
	s1605(E)	86	#6	9'-4"	
	s1606(E)	132	#6	13'-4"	
	s1607(E)	48	#6	16'-6"	
	s1608(E)	47	#6	13'-2"	
	s1609(E)	13	#5	8'-2"	
	s1610(E)	8	#5	5'-5"	
***	sp1601(E)	3	#7	24'-6"	
***	sp1602(E)	3	#7	68'-7"	
***	sp1603(E)	3	#7	18'-10"	
	u1601(E)	22	#8	22'-5"	
	u1602(E)	40	#9	27'-11"	
	u1603(E)	12	#7	6'-9"	
	u1604(E)	12	#7	6'-10"	
	u1605(E)	20	#7	20'-8"	
	v1601(E)	66	#14	50'-10"	
	v1602(E)	66	#14	53'-4"	
	v1603(E)	132	#14	48'-4"	
	v1604(E)	132	#14	55'-10"	
	v1605(E)	120	#11	37'-5"	

Concrete Structures	Cu. Yd.	487.7
Reinforcement Bars, Epoxy Coated	Pound	315,320
Permanent Casing	Foot	209
Drilled Shaft in Soil	Cu. Yd.	477
Drilled Shaft in Rock	Cu. Yd.	161
Crosshole Sonic Logging Access Ducts	Foot	279
Crosshole Sonic Logging Testing	Each	3
Thermal Integrity Profile Data Collection	Foot	279
Thermal Integrity Profile Testing	Each	3

*** Length is height of spiral.

Notes:

For Pier Plan and Elevation, see sheets 211 thru 213 of 292.

For additional bar details, see sheets 214 and 215 of 292.

Pier 11 & 16 vertical load drilled shaft foundation design is based on side resistance in bedrock. For vertical load design, penetration into rock is required to achieve the factored resistance used in design (12,242 kip). The limits shown for drilled shaft in rock is the minimum penetration required to achieve lateral fixity in rock for lateral load design.

The quantities and reinforcement detailing are based on the estimated top of competent rock and the estimated elevations shown and may change based on the actual elevations encountered at each shaft.

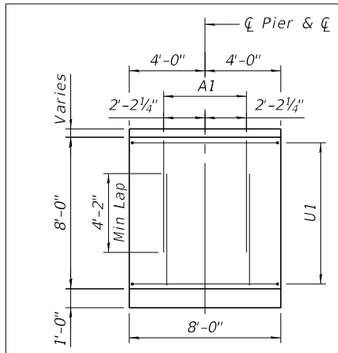

VIEW A-A

(T1 and (3) bars not shown for clarity)

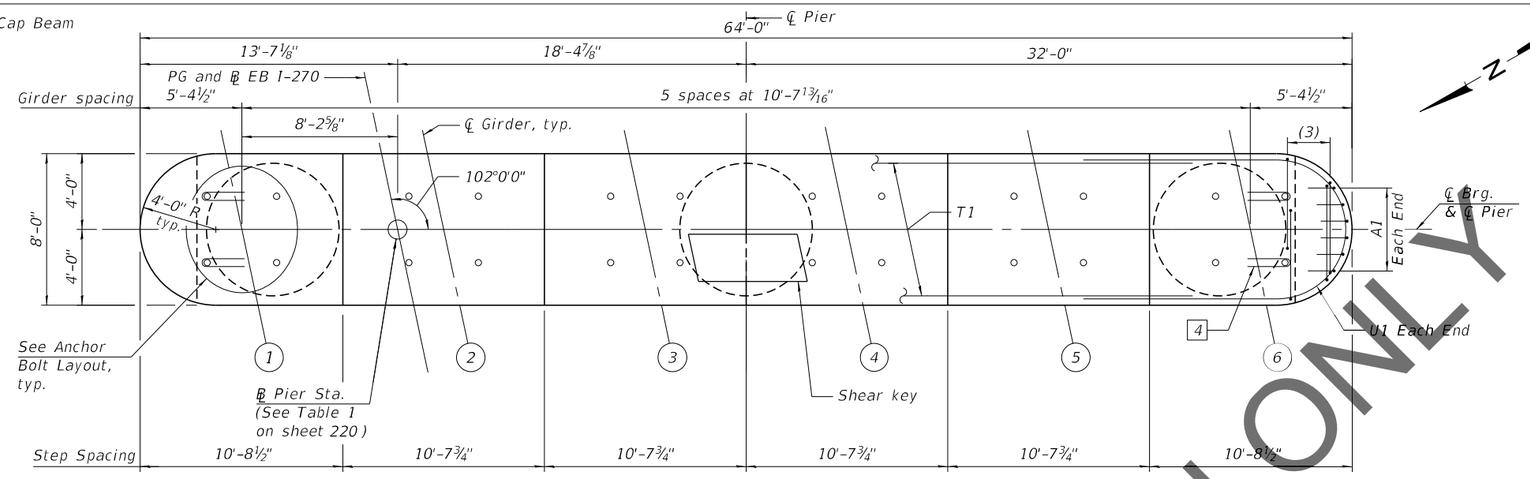

Notes:
Space reinforcement in cap to miss anchor bolts.
Pour steps monolithically with cap.

TOP PLAN

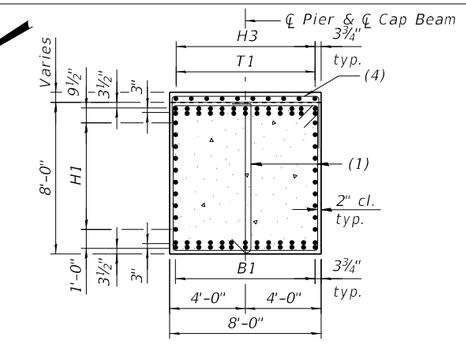

SECTION C-C

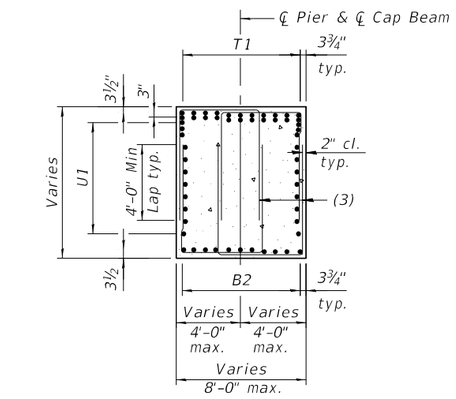

SECTION D-D

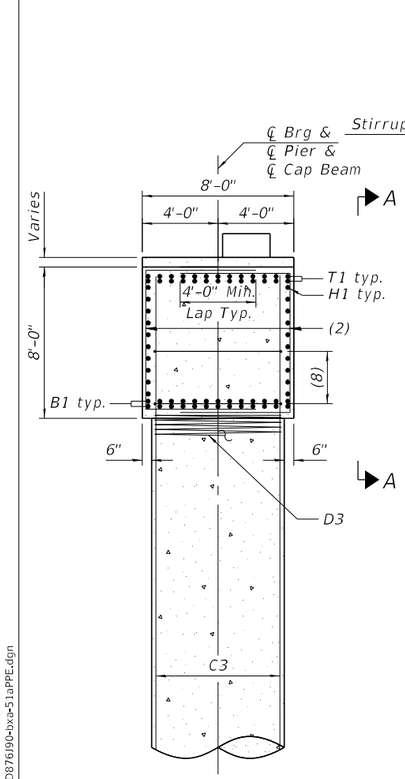

SECTION B-B

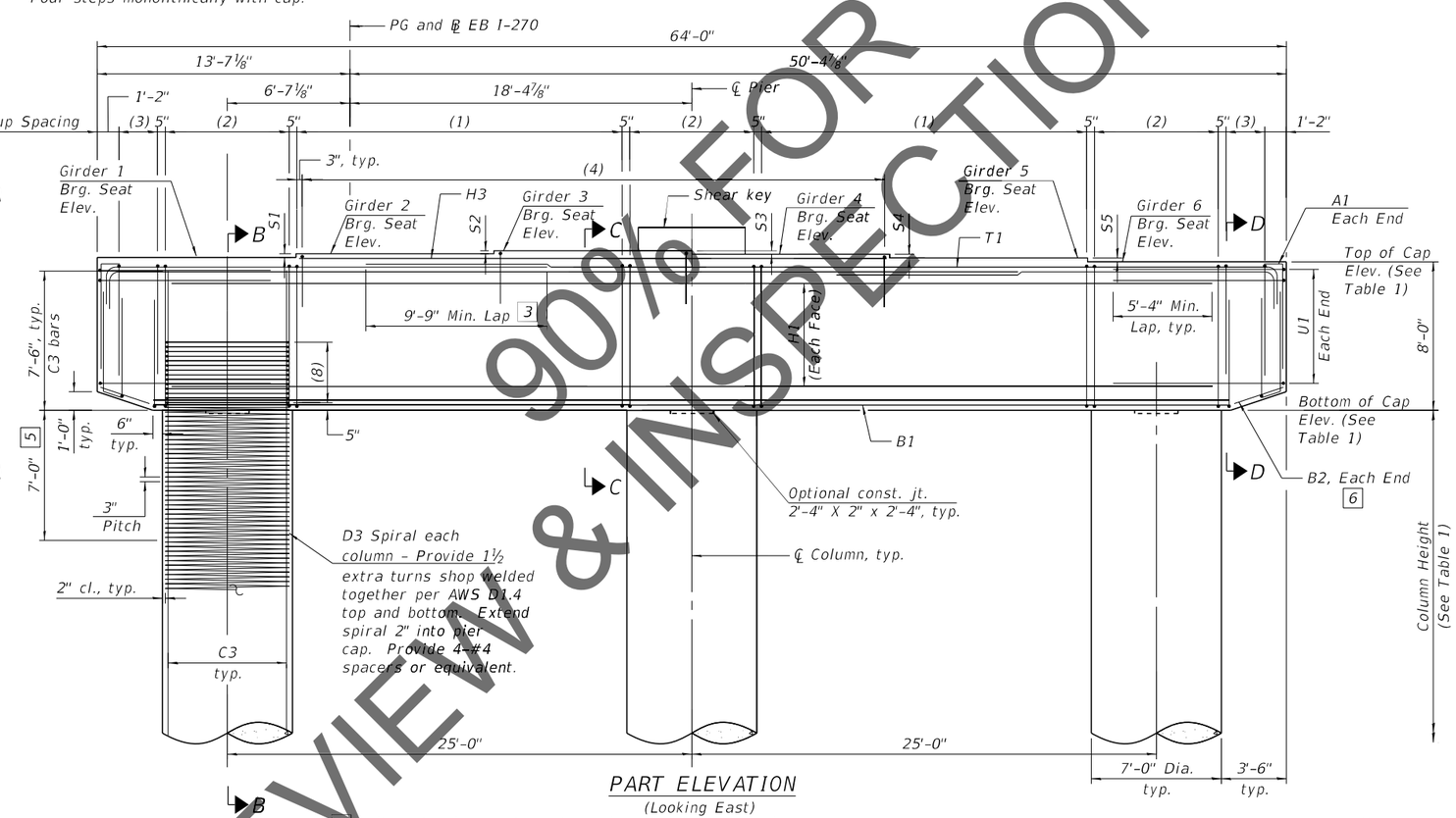

PART ELEVATION

(Looking East)

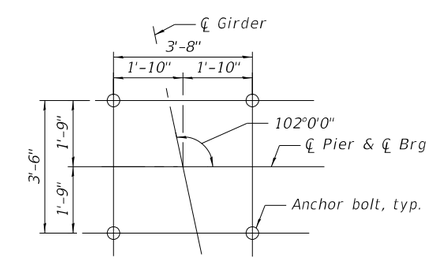

ANCHOR BOLTS LAYOUT

3 Alternate placement cap top rebars to stagger the laps

4 Provide 2 - R bar at each anchor shown. Place first R bar with top mat reinforcement and second R bar 6" below top U bar

5 No splicing of bars allowed in this region.

6 Field cut bars when needed to keep 2" clear concrete cover.

Notes:
For bar details and Bill of Materials see sheets 221 and 222 of 292.
For column height, step height and all Elevations, See Table 1 on sheet 220 of 292.
For bearing details, see sheet 159 of 292.
For bar callouts and shear key details, see sheet 220 of 292.

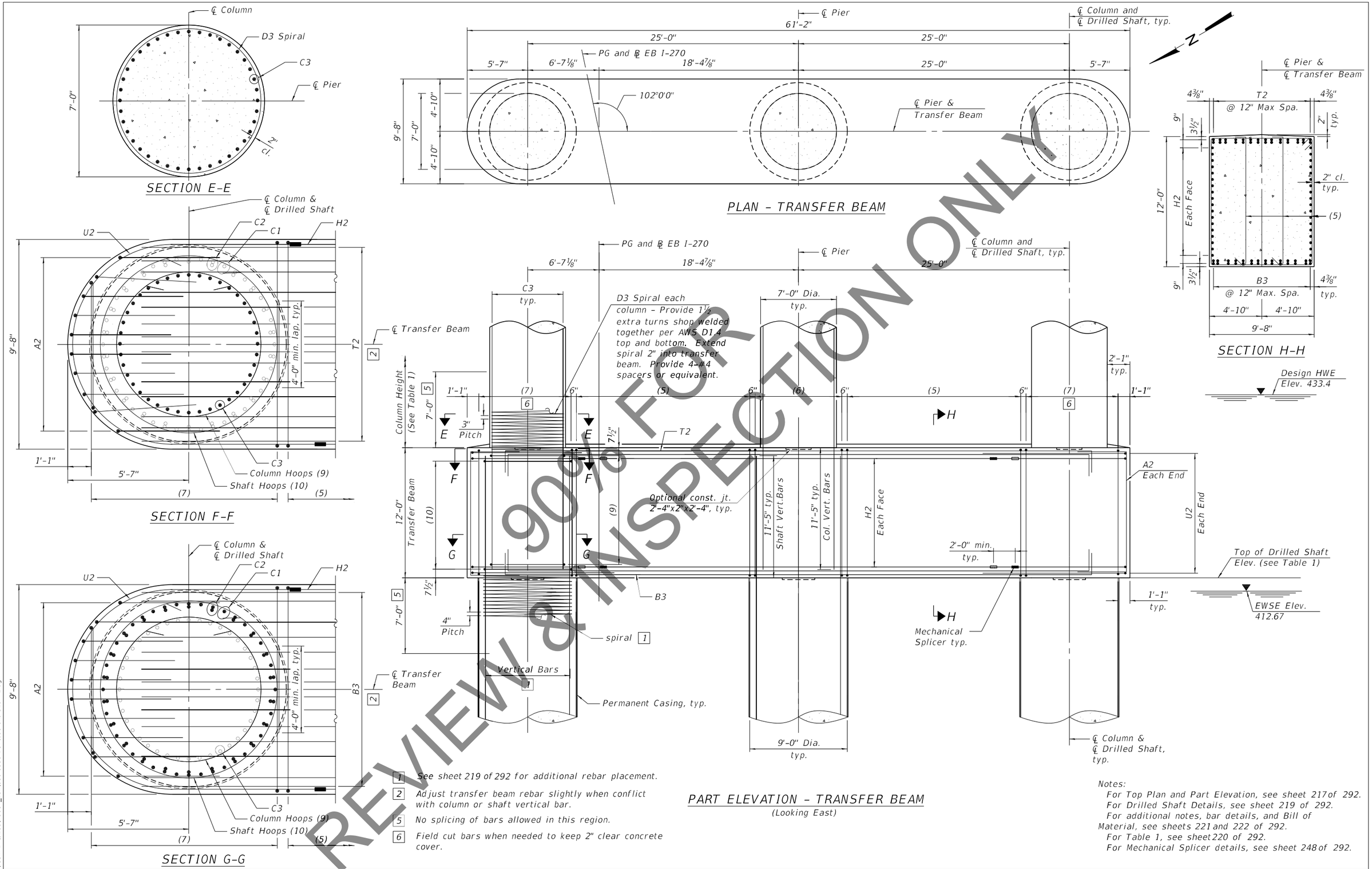

1 See sheet 219 of 292 for additional rebar placement.

2 Adjust transfer beam rebar slightly when conflict with column or shaft vertical bar.

5 No splicing of bars allowed in this region.

6 Field cut bars when needed to keep 2" clear concrete cover.

Notes:
For Top Plan and Part Elevation, see sheet 217 of 292.
For Drilled Shaft Details, see sheet 219 of 292.
For additional notes, bar details, and Bill of Material, see sheets 221 and 222 of 292.
For Table 1, see sheet 220 of 292.
For Mechanical Splicer details, see sheet 248 of 292.

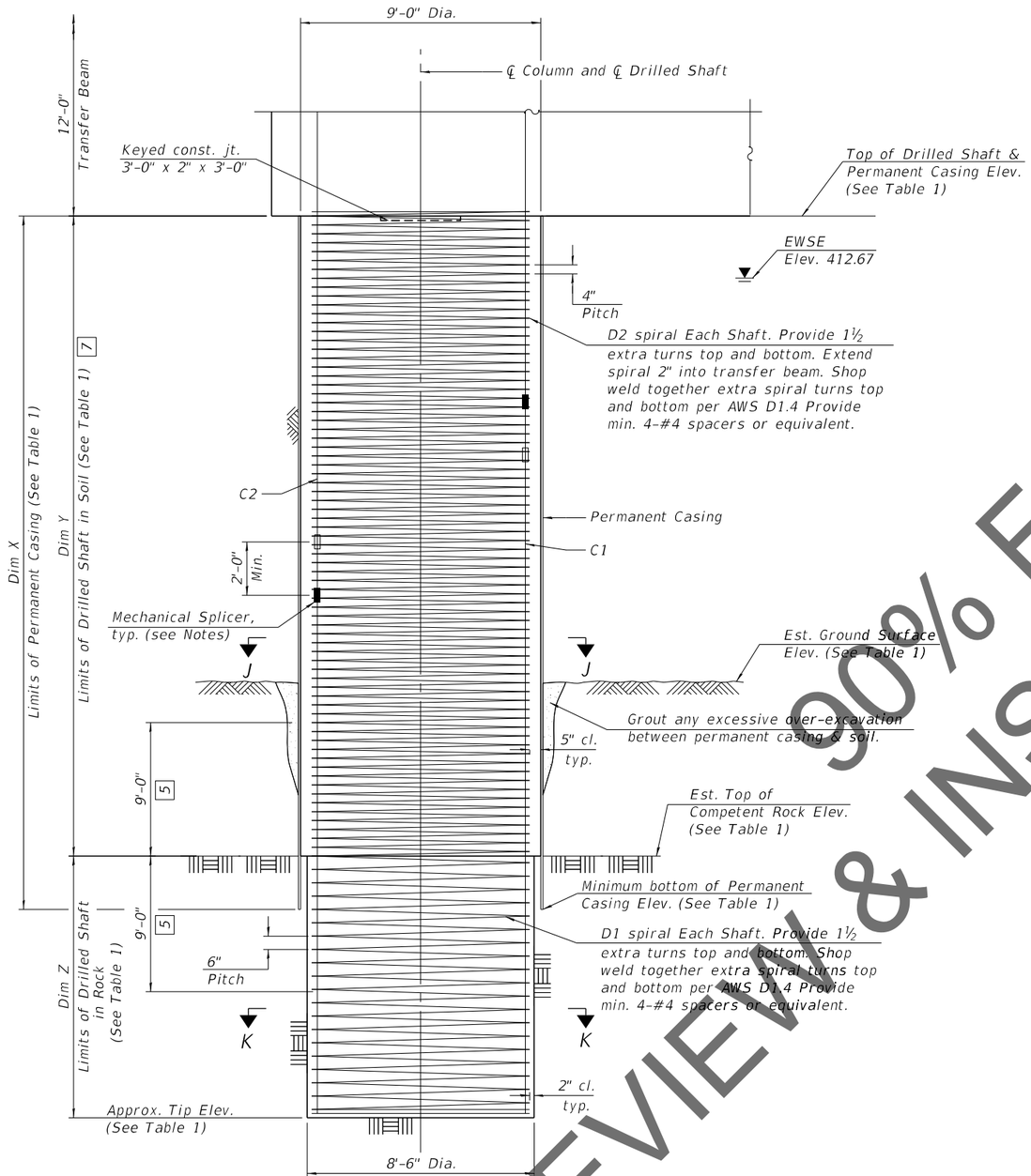

DRILLED SHAFT DETAIL

(One shaft shown, three shafts required, one under each column)

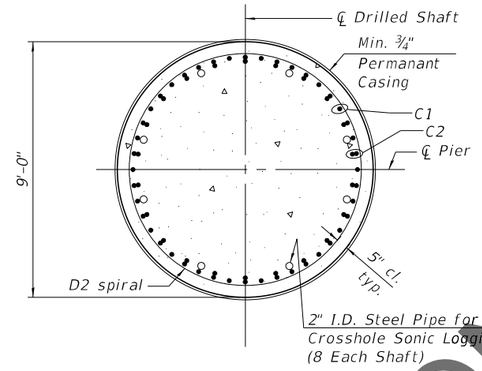

SECTION J-J

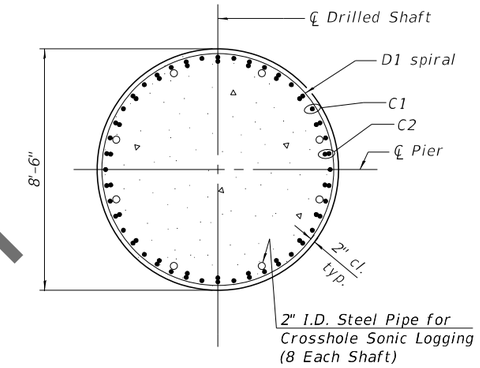

SECTION K-K

5 No splicing of bars allowed in this region.

7 If the prevailing water surface elevation during construction is consistently different than estimated on the plans, the contractor may propose an adjustment to the top of the drilled shaft elevation as part of their installation procedure. The top of all drilled shafts within a substructure unit shall be constructed to the same elevation and extend above the prevailing water surface. The quantities and reinforcement detailing are based on the top of shaft and the estimated elevations shown and may change based on the actual elevations encountered at each shaft and the final top of shaft elevation.

Notes:

For Pier Plan and Elevation, see Sheets 217 and 218 of 292.

For additional notes, bar details, and Bill of Materials, see sheets 221 and 222 of 292.

For Table 1, see sheet 220 of 292.

For Mechanical Splicer Details, see sheet 248 of 292.

The Contractor may propose a construction joint in the drilled shaft so separate pours can be made, if the shaft can be poured in the dry, subject to approval from the Engineer.

The Permanent Casing is shown embedded 2 ft. into rock for estimate of quantities. The Contractor is responsible for determining the casing thickness and the actual tip elevation to be used. See Article 516.06(d) of the Standard Specifications. Pay Limits for the Permanent Casing shall be based on the minimum length shown.

When splicing of spiral reinforcement is necessary, the spirals shall be provided with 1 ½ extra turns at the ends to be spliced. These additional turns shall either be welded together according to AWS D1.4, or shall both terminate with a 135° standard hook.

Alternate location of mechanical splices of C1 bars every other bar. Alternate location of mechanical splices of C2 bars within each bundle.

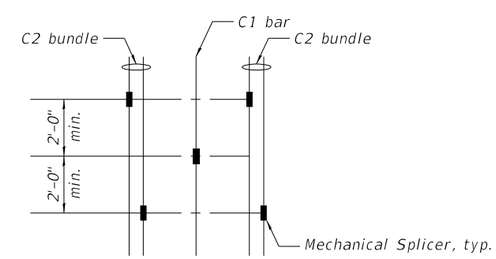

ALTERNATE MECHANICAL SPLICERS LOCATION

MODEL: Default
FILE NAME: C:\ICS4PDF\9203\45087_235\060-0350-D876J90-bxa-53aPPE.dgn
9/11/2021 4:49:01 PM

HORNER & SHIFRIN
Teaming with: PARSONS

USER NAME =	DESIGNED - GX	REVISED -	
	CHECKED - TMB	REVISED -	
PLOT SCALE =	DRAWN - JG	REVISED -	
PLOT DATE =	CHECKED - TMB	REVISED -	

STATE OF ILLINOIS
DEPARTMENT OF TRANSPORTATION

PIER 12 THRU 15 PLAN AND ELEVATION - 3
STRUCTURE NO. 060-0350 (EB)

SHEET 219 OF 292 SHEETS

F.A.J. RTE.	SECTION	COUNTY	TOTAL SHEETS	SHEET NO.
270	60B-1	MADISON	860	419
		CONTRACT NO. 76J90		
		ILLINOIS FED. AID PROJECT		

TABLE 1

		Pier 12	Pier 13	Pier 14	Pier 15
℄ Pier Station		1803+84.97	1806+20.97	1808+56.97	1810+92.97
Bearing Seat Elevation	Girder 1	456.02	456.98	456.08	454.90
	Girder 2	456.22	457.19	456.30	455.12
	Girder 3	456.38	457.36	456.48	455.30
	Girder 4	456.17	457.15	456.29	455.11
	Girder 5	455.95	456.94	456.09	454.91
	Girder 6	455.73	456.73	455.89	454.71
Top of Cap Elevation		455.73	456.73	455.89	454.71
Bottom of Cap Elevation		447.73	448.73	447.89	446.71
Column Height		20'-8¾"	21'-8¾"	20'-10⅝"	19'-8½"
Top of Shaft Elevation		415.00	415.00	415.00	415.00
Approx. Tip Elevation		338.80	321.20	316.90	315.20
Est. Ground Surface Elevation		367.80	363.80	365.00	369.20
Est. Top of Rock Elevation		364.30	346.70	342.40	340.70
Min. bottom of Permanent Casing Elevation		362.30	344.70	340.40	338.70
Dim X		52'-8⅜"	70'-3½"	74'-7⅛"	76'-3½"
Dim Y		50'-8⅜"	68'-3½"	72'-7⅛	74'-3½"
Dim Z		25'-6"	25'-6"	25'-6"	25'-6"
S1		2 ⅜"	2 ½"	2 ⅝"	2 ⅝"
S2		1 ⅞"	2"	2 ⅛"	2 ⅛"
S3		2 ½"	2 ½"	2 ¼"	2 ¼"
S4		2 ⅝"	2 ½"	2 ⅜"	2 ⅜"
S5		2 ⅝"	2 ½"	2 ⅜"	2 ⅜"

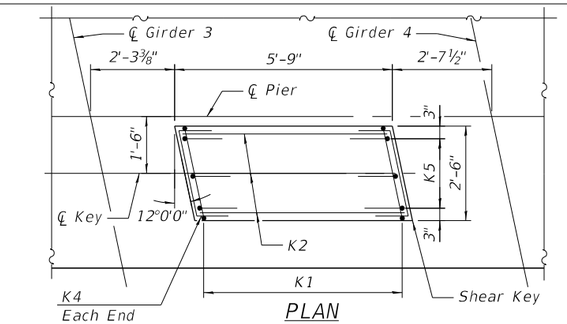

PLAN

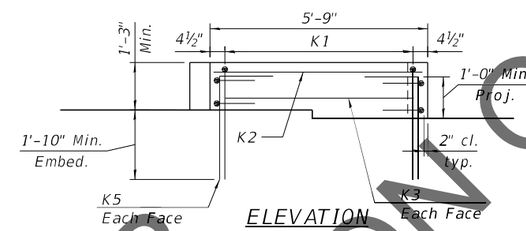

ELEVATION

SHEAR KEY DETAILS

Notes:
For Pier Plan and Elevation, see sheets 217, 218 and 219 of 292.
For bar details, see sheet 221 of 292.
For Bill of Material, see sheet 222 of 292.

Mark	Pier 12 Bar Callouts	Pier 13 Bar Callouts	Pier 14 Bar Callouts	Pier 15 Bar Callouts
(1)	43 sets of 1-#6 s1201(E) and 1-#6 s1205(E) at 5" cts.	43 sets of 1-#6 s1301(E) and 1-#6 s1305(E) at 5" cts.	43 sets of 1-#6 s1401(E) and 1-#6 s1405(E) at 5" cts.	43 sets of 1-#6 s1501(E) and 1-#6 s1505(E) at 5" cts.
(2)	11 sets of 2-#6 s1202(E) at 8" cts.	11 sets of 2-#6 s1302(E) at 8" cts.	11 sets of 2-#6 s1402(E) at 8" cts.	11 sets of 2-#6 s1502(E) at 8" cts.
(3)	6 sets of 4-#6 s1207(E) at 5" cts.	6 sets of 4-#6 s1307(E) at 5" cts.	6 sets of 4-#6 s1407(E) at 5" cts.	6 sets of 4-#6 s1507(E) at 5" cts.
(4)	47-#6 s1208(E) at abt. 8" cts.	47-#6 s1308(E) at abt. 8" cts.	47-#6 s1408(E) at abt. 8" cts.	47-#6 s1508(E) at abt. 8" cts.
(5)	33 sets of 1-#6 s1203(E) and 2-#6 s1206(E) at 6" cts.	33 sets of 1-#6 s1303(E) and 2-#6 s1306(E) at 6" cts.	33 sets of 1-#6 s1403(E) and 2-#6 s1406(E) at 6" cts.	33 sets of 1-#6 s1503(E) and 2-#6 s1506(E) at 6" cts.
(6)	17 sets of 2-#6 s1204(E) at 6" cts	17 sets of 2-#6 s1304(E) at 6" cts	17 sets of 2-#6 s1404(E) at 6" cts	17 sets of 2-#6 s1504(E) at 6" cts
(7)	18 sets of 2-#6 s1204(E) at 6" cts.	18 sets of 2-#6 s1304(E) at 6" cts.	18 sets of 2-#6 s1404(E) at 6" cts.	18 sets of 2-#6 s1504(E) at 6" cts.
(8)	14-#7 hp1202(E) hoops at 3"	14-#7 hp1302(E) hoops at 3"	14-#7 hp1402(E) hoops at 3"	14-#7 hp1502(E) hoops at 3"
(9)	44-#7 hp1202(E) hoops at 3"	44-#7 hp1302(E) hoops at 3"	44-#7 hp1402(E) hoops at 3"	44-#7 hp1502(E) hoops at 3"
(10)	33-#7 hp1201(E) hoops at 4"	33-#7 hp1301(E) hoops at 4"	33-#7 hp1401(E) hoops at 4"	33-#7 hp1501(E) hoops at 4"
T1	2 layers of 13-#11 p1201(E) or p1202(E) at 7⅜"	2 layers of 13-#11 p1301(E) or p1302(E) at 7⅜"	2 layers of 13-#11 p1401(E) or p1402(E) at 7⅜"	2 layers of 13-#11 p1501(E) or p1502(E) at 7⅜"
T2	14 bundles of 1-#11 p1205(E) (top) and 1-#11 p1206(E) (bot) at 12" max	14 bundles of 1-#11 p1305(E) (top) and 1-#11 p1306(E) (bot) at 12" max	14 bundles of 1-#11 p1405(E) (top) and 1-#11 p1406(E) (bot) at 12" max	14 bundles of 1-#11 p1505(E) (top) and 1-#11 p1506(E) (bot) at 12" max
B1	2 layers of 13-#11 p1203(E) at 7⅜"	2 layers of 13-#11 p1303(E) at 7⅜"	2 layers of 13-#11 p1403(E) at 7⅜"	2 layers of 13-#11 p1503(E) at 7⅜"
B2	11-#7 p1204(E) at 7⅜"	11-#7 p1304(E) at 7⅜"	11-#7 p1404(E) at 7⅜"	11-#7 p1504(E) at 7⅜"
B3	14 bundles of 1-#11 p1205(E) (bot) and 1-#11 p1206(E) (top) at 12" max	14 bundles of 1-#11 p1305(E) (bot) and 1-#11 p1306(E) (top) at 12" max	14 bundles of 1-#11 p1405(E) (bot) and 1-#11 p1406(E) (top) at 12" max	14 bundles of 1-#11 p1505(E) (bot) and 1-#11 p1506(E) (top) at 12" max
H1	10-#8 h1201(E) at 7½"	10-#8 h1301(E) at 7½"	10-#8 h1401(E) at 7½"	10-#8 h1501(E) at 7½"
H2	18-#9 h1202(E) at 7"	18-#9 h1302(E) at 7"	18-#9 h1402(E) at 7"	18-#9 h1502(E) at 7"
H3	10-#6 h1203(E) at abt. 9¾"	10-#6 h1303(E) at abt. 9¾"	10-#6 h1403(E) at abt. 9¾"	10-#6 h1503(E) at abt. 9¾"
A1	6 sets of 1-#7 u1203(E) and 1-#7 u1204(E) at 10½"	6 sets of 1-#7 u1303(E) and 1-#7 u1304(E) at 10½"	6 sets of 1-#7 u1403(E) and 1-#7 u1404(E) at 10½"	6 sets of 1-#7 u1503(E) and 1-#7 u1504(E) at 10½"
A2	10-#7 u1205(E) at 10¾"	10-#7 u1305(E) at 10¾"	10-#7 u1405(E) at 10¾"	10-#7 u1505(E) at 10¾"
U1	11-#8 u1201(E) space with h1201(E) and p1201(E)	11-#8 u1301(E) space with h1301(E) and p1301(E)	11-#8 u1401(E) space with h1401(E) and p1401(E)	11-#8 u1501(E) space with h1501(E) and p1501(E)
U2	20-#9 u1202(E) splice with h1202(E) and space with p1205(E)	20-#9 u1302(E) splice with h1302(E) and space with p1305(E)	20-#9 u1402(E) splice with h1402(E) and space with p1405(E)	20-#9 u1502(E) splice with h1502(E) and space with p1505(E)
C1	22 sets of 1-#14 v1201(E) and 1-#14 v1202(E) alternate eq. spa.	22 sets of 1-#14 v1301(E) and 1-#14 v1302(E) alternate eq. spa.	22 sets of 1-#14 v1401(E) and 1-#14 v1402(E) alternate eq. spa.	22 sets of 1-#14 v1501(E) and 1-#14 v1502(E) alternate eq. spa.
C2	22 bundles of 2-#14 v1203(E) and 2-#14 v1204(E) alternate eq. spa.	22 bundles of 2-#14 v1303(E) and 2-#14 v1304(E) alternate eq. spa.	22 bundles of 2-#14 v1403(E) and 2-#14 v1404(E) alternate eq. spa.	22 bundles of 2-#14 v1503(E) and 2-#14 v1504(E) alternate eq. spa.
C3	40-#11 v1205(E) eq. spa.	40-#11 v1305(E) eq. spa.	40-#11 v1405(E) eq. spa.	40-#11 v1505(E) eq. spa.
D1	#7 sp1201(E) at 6" pitch	#7 sp1301(E) at 6" pitch	#7 sp1401(E) at 6" pitch	#7 sp1501(E) at 6" pitch
D2	#7 sp1202(E) at 4" pitch	#7 sp1302(E) at 4" pitch	#7 sp1402(E) at 4" pitch	#7 sp1502(E) at 4" pitch
D3	#7 sp1203(E) at 3" pitch	#7 sp1303(E) at 3" pitch	#7 sp1403(E) at 3" pitch	#7 sp1503(E) at 3" pitch
K1	13-#5 s1209(E) spa. at 5"	13-#5 s1309(E) spa. at 5"	13-#5 s1409(E) spa. at 5"	13-#5 s1509(E) spa. at 5"
K2	3-#5 h1204(E) spa. with n1201(E)	3-#5 h1304(E) spa. with n1301(E)	3-#5 h1404(E) spa. with n1401(E)	3-#5 h1504(E) spa. with n1501(E)
K3	1-#5 h1204(E) ea. face	1-#5 h1304(E) ea. face	1-#5 h1404(E) ea. face	1-#5 h1504(E) ea. face
K4	2-#5 h1205(E) ea. face	2-#5 h1305(E) ea. face	2-#5 h1405(E) ea. face	2-#5 h1505(E) ea. face
K5	3-#5 n1201(E) at 12" ea. face	3-#5 n1301(E) at 12" ea. face	3-#5 n1401(E) at 12" ea. face	3-#5 n1501(E) at 12" ea. face
R1	#5 s1210(E)	#5 s1310(E)	#5 s1410(E)	#5 s1510(E)

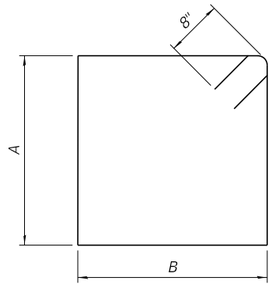

BARS s1201(E) & s1203(E)
BARS s1301(E) & s1303(E)
BARS s1401(E) & s1403(E)
BARS s1501(E) & s1503(E)

Bars	A	B
s1201(E) thru s1501(E)	7' -8"	7' -8"
s1203(E) thru s1503(E)	11' -8"	9' -4"

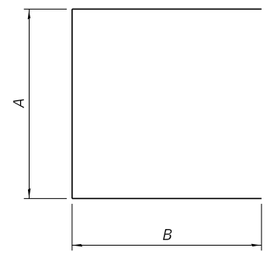

BARS s1202(E) & s1204(E) & s1207(E)
BARS s1302(E) & s1304(E) & s1307(E)
BARS s1402(E) & s1404(E) & s1407(E)
BARS s1502(E) & s1504(E) & s1507(E)

Bars	A	B
s1202(E) thru s1502(E)	7' -8"	5' -10"
s1204(E) thru s1504(E)	11' -8"	6' -8"
s1207(E) thru s1507(E)	4' -10"	5' -10"

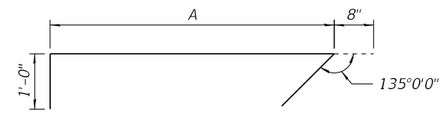

BARS s1205(E) & s1206(E)
BARS s1305(E) & s1306(E)
BARS s1405(E) & s1406(E)
BARS s1505(E) & s1506(E)

Bars	A
s1205(E) thru s1505(E)	7' -8"
s1206(E) thru s1506(E)	11' -8"

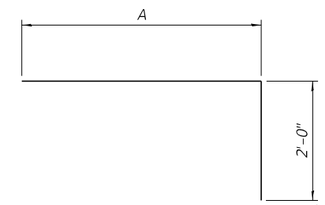

BARS p1201(E) & p1202(E)
BARS p1301(E) & p1302(E)
BARS p1401(E) & p1402(E)
BARS p1501(E) & p1502(E)

Bars	A
p1201(E) thru p1501(E)	24' -0"
p1202(E) thru p1502(E)	49' -5"

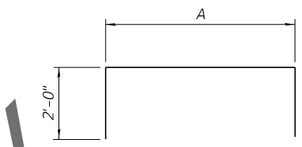

BARS p1205(E) & p1206(E)
BARS p1305(E) & p1306(E)
BARS p1405(E) & p1406(E)
BARS p1505(E) & p1506(E)

Bars	A
p1205(E) thru p1505(E)	54' -2"
p1206(E) thru p1506(E)	53' -8"

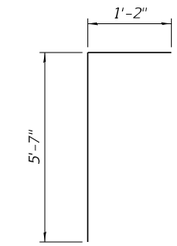

BARS u1203(E)
BARS u1303(E)
BARS u1403(E)
BARS u1503(E)

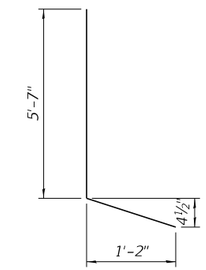

BARS u1204(E)
BARS u1304(E)
BARS u1404(E)
BARS u1504(E)

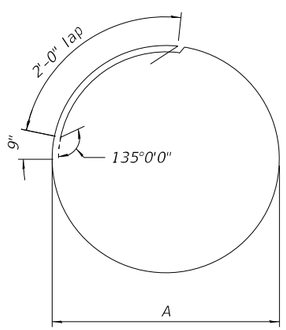

BARS hp1201(E) & hp1202(E)
BARS hp1301(E) & hp1302(E)
BARS hp1401(E) & hp1402(E)
BARS hp1501(E) & hp1502(E)

Bars	A
hp1201(E) thru hp1501(E)	8' -2"
hp1202(E) thru hp1502(E)	6' -8"

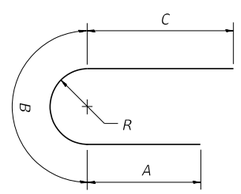

BARS u1201(E) & u1202(E)
BARS u1301(E) & u1302(E)
BARS u1401(E) & u1402(E)
BARS u1501(E) & u1502(E)

Bars	A	B	C	R
u1201(E) thru u1501(E)	5' -4"	11' -9"	5' -4"	3' -9"
u1202(E) thru u1502(E)	5' -9"	14' -5"	7' -9"	4' -7"

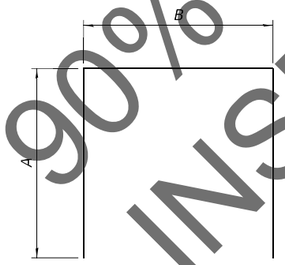

BARS u1205(E) & s1208(E)
BARS u1305(E) & s1308(E)
BARS u1405(E) & s1408(E)
BARS u1505(E) & s1508(E)

Bars	A	B
u1205(E) thru u1505(E)	4' -7"	11' -6"
s1208(E) thru s1508(E)	2' -9"	7' -8"

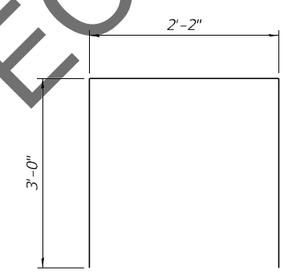

BARS s1209(E)
BARS s1309(E)
BARS s1409(E)
BARS s1509(E)

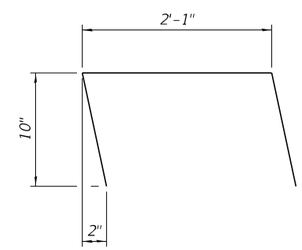

BARS h1205(E)
BARS h1305(E)
BARS h1405(E)
BARS h1505(E)

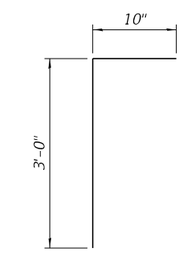

BARS n1201(E)
BARS n1301(E)
BARS n1401(E)
BARS n1501(E)

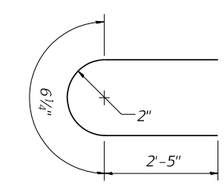

BARS s1210(E)
BARS s1310(E)
BARS s1410(E)
BARS s1510(E)

Pier 12
BILL OF MATERIAL

	Bar	No.	Size	Length	Shape
	h1201(E)	20	#8	56'-2"	
	h1202(E)	36	#9	38'-0"	
	h1203(E)	10	#6	31'-7"	
	h1204(E)	5	#5	5'-5"	
	h1205(E)	4	#5	3'-11"	
	hp1201(E)	99	#7	29'-2"	
	hp1202(E)	174	#7	24'-6"	
	n1201(E)	6	#5	3'-10"	
	p1201(E)	26	#11	26'-0"	
	p1202(E)	26	#11	51'-5"	
	p1203(E)	26	#11	57'-9"	
	p1204(E)	22	#7	2'-11"	
	p1205(E)	28	#11	58'-2"	
	p1206(E)	28	#11	57'-8"	
	s1201(E)	86	#6	32'-0"	
	s1202(E)	66	#6	19'-4"	
	s1203(E)	66	#6	43'-4"	
	s1204(E)	106	#6	25'-0"	
	s1205(E)	86	#6	9'-4"	
	s1206(E)	132	#6	13'-4"	
	s1207(E)	48	#6	16'-6"	
	s1208(E)	47	#6	13'-2"	
	s1209(E)	13	#5	8'-2"	
	s1210(E)	8	#5	5'-5"	
***	sp1201(E)	3	#7	24'-6"	
***	sp1202(E)	3	#7	51'-11"	
***	sp1203(E)	3	#7	21'-1"	
	u1201(E)	22	#8	22'-5"	
	u1202(E)	40	#9	27'-11"	
	u1203(E)	12	#7	6'-9"	
	u1204(E)	12	#7	6'-10"	
	u1205(E)	20	#7	20'-8"	
	v1201(E)	66	#14	42'-6"	
	v1202(E)	66	#14	45'-0"	
	v1203(E)	132	#14	40'-0"	
	v1204(E)	132	#14	47'-6"	
	v1205(E)	120	#11	39'-8"	

Concrete Structures	Cu. Yd.	498.3
Reinforcement Bars, Epoxy Coated	Pound	284,790
Permanent Casing	Foot	159
Drilled Shaft in Soil	Cu. Yd.	359
Drilled Shaft in Rock	Cu. Yd.	161
Crosshole Sonic Logging Access Ducts	Foot	229
Crosshole Sonic Logging Testing	Each	3
Thermal Integrity Profile Data Collection	Foot	229
Thermal Integrity Profile Testing	Each	3

*** Length is height of spiral.

Pier 13
BILL OF MATERIAL

	Bar	No.	Size	Length	Shape
	h1301(E)	20	#8	56'-2"	
	h1302(E)	36	#9	38'-0"	
	h1303(E)	10	#6	31'-7"	
	h1304(E)	5	#5	5'-5"	
	h1305(E)	4	#5	3'-11"	
	hp1301(E)	99	#7	29'-2"	
	hp1302(E)	174	#7	24'-6"	
	n1301(E)	6	#5	3'-10"	
	p1301(E)	26	#11	26'-0"	
	p1302(E)	26	#11	51'-5"	
	p1303(E)	26	#11	57'-9"	
	p1304(E)	22	#7	2'-11"	
	p1305(E)	28	#11	58'-2"	
	p1306(E)	28	#11	57'-8"	
	s1301(E)	86	#6	32'-0"	
	s1302(E)	66	#6	19'-4"	
	s1303(E)	66	#6	43'-4"	
	s1304(E)	106	#6	25'-0"	
	s1305(E)	86	#6	9'-4"	
	s1306(E)	132	#6	13'-4"	
	s1307(E)	48	#6	16'-6"	
	s1308(E)	47	#6	13'-2"	
	s1309(E)	13	#5	8'-2"	
	s1310(E)	8	#5	5'-5"	
***	sp1301(E)	3	#7	24'-6"	
***	sp1302(E)	3	#7	69'-6"	
***	sp1303(E)	3	#7	22'-1"	
	u1301(E)	22	#8	22'-5"	
	u1302(E)	40	#9	27'-11"	
	u1303(E)	12	#7	6'-9"	
	u1304(E)	12	#7	6'-10"	
	u1305(E)	20	#7	20'-8"	
	v1301(E)	66	#14	51'-4"	
	v1302(E)	66	#14	53'-9"	
	v1303(E)	132	#14	48'-10"	
	v1304(E)	132	#14	56'-3"	
	v1305(E)	120	#11	40'-8"	

Concrete Structures	Cu. Yd.	502.2
Reinforcement Bars, Epoxy Coated	Pound	320,880
Permanent Casing	Foot	211
Drilled Shaft in Soil	Cu. Yd.	483
Drilled Shaft in Rock	Cu. Yd.	161
Crosshole Sonic Logging Access Ducts	Foot	281
Crosshole Sonic Logging Testing	Each	3
Thermal Integrity Profile Data Collection	Foot	281
Thermal Integrity Profile Testing	Each	3

*** Length is height of spiral.

Pier 14
BILL OF MATERIAL

	Bar	No.	Size	Length	Shape
	h1401(E)	20	#8	56'-2"	
	h1402(E)	36	#9	38'-0"	
	h1403(E)	10	#6	31'-7"	
	h1404(E)	5	#5	5'-5"	
	h1405(E)	4	#5	3'-11"	
	hp1401(E)	99	#7	29'-2"	
	hp1402(E)	174	#7	24'-6"	
	n1401(E)	6	#5	3'-10"	
	p1401(E)	26	#11	26'-0"	
	p1402(E)	26	#11	51'-5"	
	p1403(E)	26	#11	57'-9"	
	p1404(E)	22	#7	2'-11"	
	p1405(E)	28	#11	58'-2"	
	p1406(E)	28	#11	57'-8"	
	s1401(E)	86	#6	32'-0"	
	s1402(E)	66	#6	19'-4"	
	s1403(E)	66	#6	43'-4"	
	s1404(E)	106	#6	25'-0"	
	s1405(E)	86	#6	9'-4"	
	s1406(E)	132	#6	13'-4"	
	s1407(E)	48	#6	16'-6"	
	s1408(E)	47	#6	13'-2"	
	s1409(E)	13	#5	8'-2"	
	s1410(E)	8	#5	5'-5"	
***	sp1401(E)	3	#7	24'-6"	
***	sp1402(E)	3	#7	73'-10"	
***	sp1403(E)	3	#7	21'-3"	
	u1401(E)	22	#8	22'-5"	
	u1402(E)	40	#9	27'-11"	
	u1403(E)	12	#7	6'-9"	
	u1404(E)	12	#7	6'-10"	
	u1405(E)	20	#7	20'-8"	
	v1401(E)	66	#14	53'-6"	
	v1402(E)	66	#14	55'-11"	
	v1403(E)	132	#14	51'-0"	
	v1404(E)	132	#14	58'-5"	
	v1405(E)	120	#11	39'-10"	

Concrete Structures	Cu. Yd.	498
Reinforcement Bars, Epoxy Coated	Pound	328,530
Permanent Casing	Foot	224
Drilled Shaft in Soil	Cu. Yd.	514
Drilled Shaft in Rock	Cu. Yd.	161
Crosshole Sonic Logging Access Ducts	Foot	294
Crosshole Sonic Logging Testing	Each	3
Thermal Integrity Profile Data Collection	Foot	294
Thermal Integrity Profile Testing	Each	3

*** Length is height of spiral.

Pier 15
BILL OF MATERIAL

	Bar	No.	Size	Length	Shape
	h1501(E)	20	#8	56'-2"	
	h1502(E)	36	#9	38'-0"	
	h1503(E)	10	#6	31'-7"	
	h1504(E)	5	#5	5'-5"	
	h1505(E)	4	#5	3'-11"	
	hp1501(E)	99	#7	29'-2"	
	hp1502(E)	174	#7	24'-6"	
	n1501(E)	6	#5	3'-10"	
	p1501(E)	26	#11	26'-0"	
	p1502(E)	26	#11	51'-5"	
	p1503(E)	26	#11	57'-9"	
	p1504(E)	22	#7	2'-11"	
	p1505(E)	28	#11	58'-2"	
	p1506(E)	28	#11	57'-8"	
	s1501(E)	86	#6	32'-0"	
	s1502(E)	66	#6	19'-4"	
	s1503(E)	66	#6	43'-4"	
	s1504(E)	106	#6	25'-0"	
	s1505(E)	86	#6	9'-4"	
	s1506(E)	132	#6	13'-4"	
	s1507(E)	48	#6	16'-6"	
	s1508(E)	47	#6	13'-2"	
	s1509(E)	13	#5	8'-2"	
	s1510(E)	8	#5	5'-5"	
***	sp1501(E)	3	#7	24'-6"	
***	sp1502(E)	3	#7	75'-6"	
***	sp1503(E)	3	#7	20'-1"	
	u1501(E)	22	#8	22'-5"	
	u1502(E)	40	#9	27'-11"	
	u1503(E)	12	#7	6'-9"	
	u1504(E)	12	#7	6'-10"	
	u1505(E)	20	#7	20'-8"	
	v1501(E)	66	#14	54'-4"	
	v1502(E)	66	#14	56'-9"	
	v1503(E)	132	#14	51'-10"	
	v1504(E)	132	#14	59'-3"	
	v1505(E)	120	#11	38'-8"	

Concrete Structures	Cu. Yd.	493
Reinforcement Bars, Epoxy Coated	Pound	330,500
Permanent Casing	Foot	229
Drilled Shaft in Soil	Cu. Yd.	526
Drilled Shaft in Rock	Cu. Yd.	161
Crosshole Sonic Logging Access Ducts	Foot	299
Crosshole Sonic Logging Testing	Each	3
Thermal Integrity Profile Data Collection	Foot	299
Thermal Integrity Profile Testing	Each	3

*** Length is height of spiral.

Notes:

For Pier Plan and Elevation, see sheets 217 thru 219 of 292.

For additional bar details, see sheets 220 and 221 of 292.

Pier 12, 13 & 14 vertical load drilled shaft foundation design is based on side resistance in bedrock. For vertical load design, penetration into rock is required to achieve the factored resistance used in design (12,242 kip). The limits shown for drilled shaft in rock is the minimum penetration required to achieve lateral fixity in rock for lateral load design.

Pier 15 vertical load drilled shaft foundation design is based on side resistance in bedrock. For vertical load design, penetration into rock is required to achieve the factored resistance used in design (9,709 kip). The limits shown for drilled shaft in rock is the minimum penetration required to achieve lateral fixity in rock for lateral load design.

The quantities and reinforcement detailing are based on the estimated top of competent rock and the estimated elevations shown and may change based on the actual elevations encountered at each shaft.

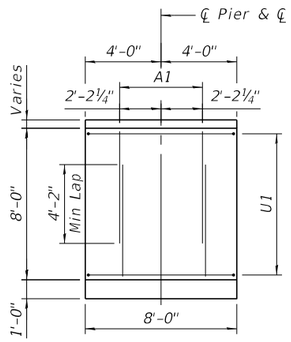

VIEW A-A

(T1 and (3) bars not shown for clarity)

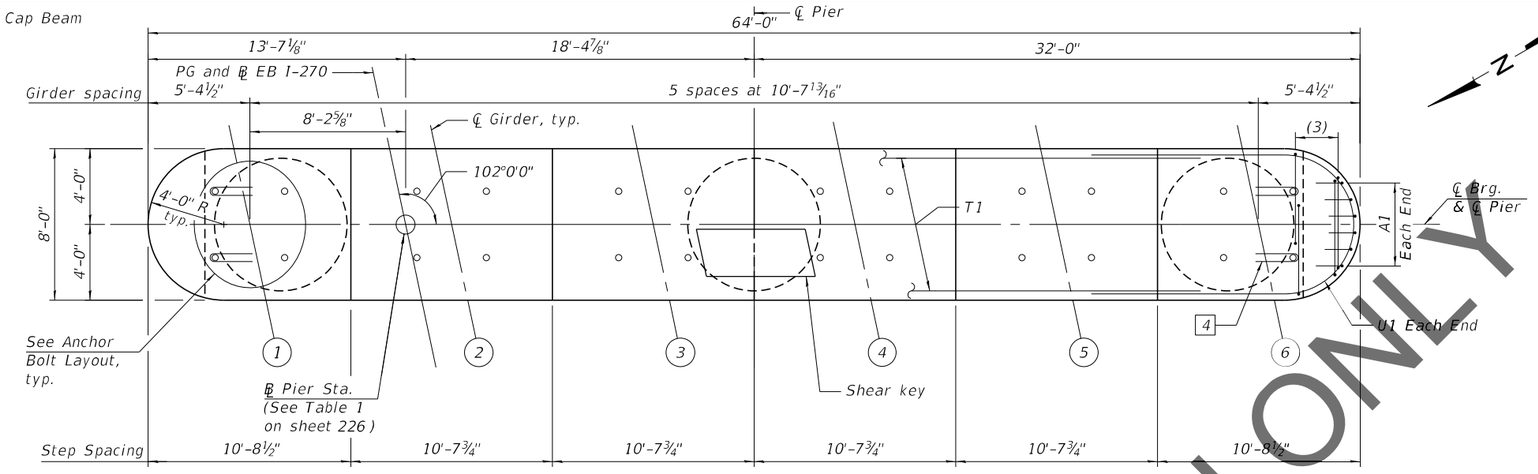

Notes:
Space reinforcement in cap to miss anchor bolts.
Pour steps monolithically with cap.

TOP PLAN

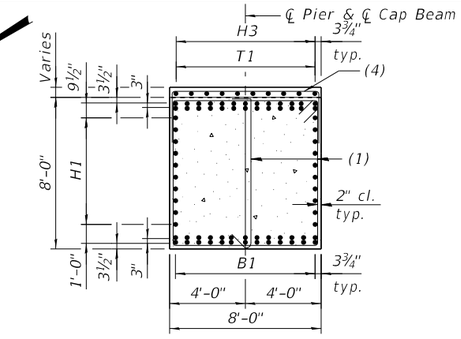

SECTION C-C

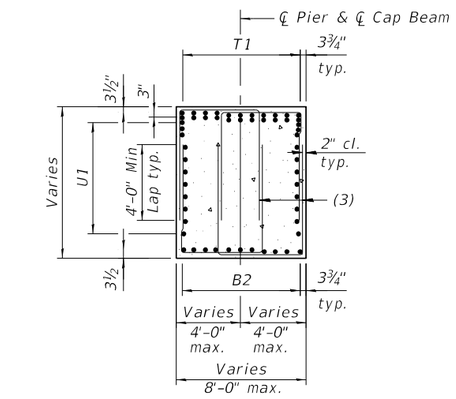

SECTION D-D

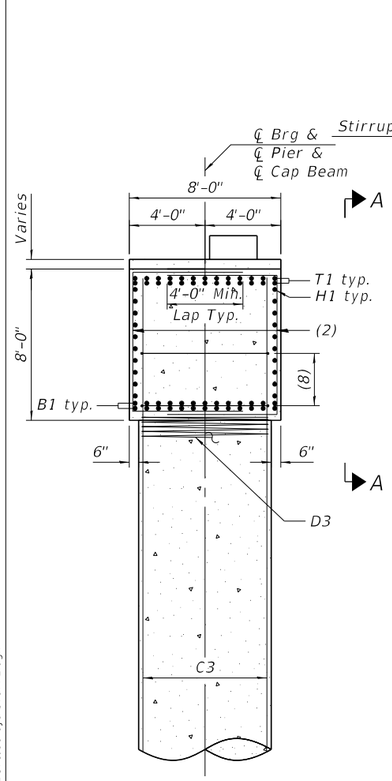

SECTION B-B

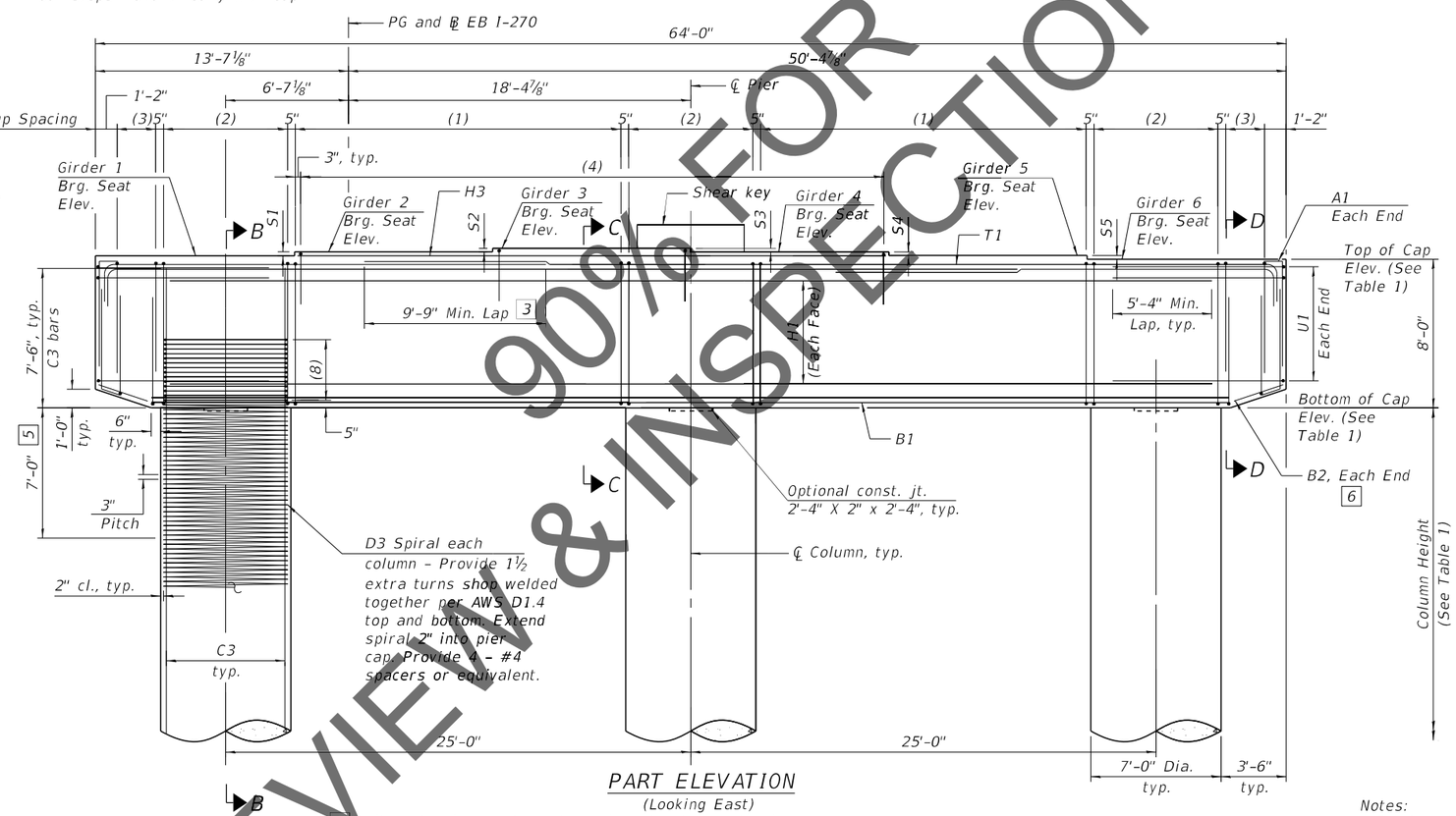

PART ELEVATION

(Looking East)

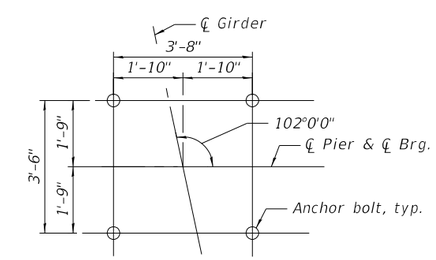

ANCHOR BOLTS LAYOUT

3 Alternate placement cap top rebars to stagger the laps

4 Provide 2 - R bar at each anchor shown. Place first R bar with top mat reinforcement and second R bar 6" below top U bar

5 No splicing of bars allowed in this region.

6 Field cut bars when needed to keep 2" clear concrete cover.

Notes:
For bar details and Bill of Materials see sheets 227 and 228 of 292.
For column height, step height and all Elevations, See Table 1 on sheet 226 of 292.
For bearing details, see sheet 160 of 292.
For bar callouts and shear key details, see sheet 226 of 292.

HORNER & SHIFRIN
Teaming with: PARSONS

USER NAME =	DESIGNED - GX	REVISED -
	CHECKED - TMB	REVISED -
PLOT SCALE =	DRAWN - JG	REVISED -
PLOT DATE =	CHECKED - TMB	REVISED -

STATE OF ILLINOIS
DEPARTMENT OF TRANSPORTATION

PIER 18 & 23 PLAN AND ELEVATION - 1
STRUCTURE NO. 060-0350 (EB)

SHEET 223 OF 292 SHEETS

F.A.I. RTE.	SECTION	COUNTY	TOTAL SHEETS	SHEET NO.
270	60B-1	MADISON	860	423
		CONTRACT NO. 76J90		
		ILLINOIS FED. AID PROJECT		

MODEL: Default
FILE NAME: C:\ICS4PDF\9203\45087_255\060-0350-D876190-bya-57aPPE.dgn
9/11/2021 4:49:13 PM

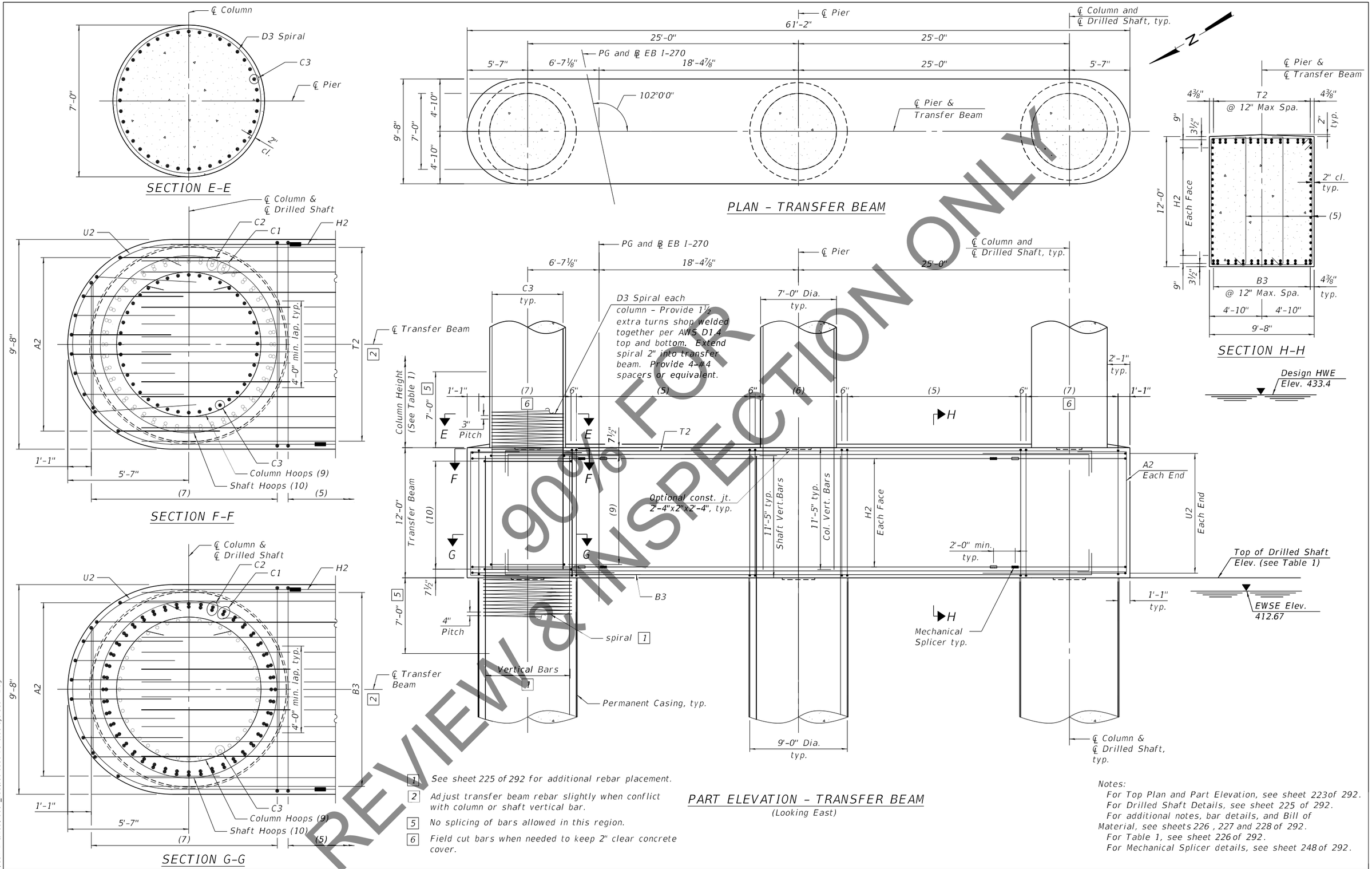

1 See sheet 225 of 292 for additional rebar placement.

2 Adjust transfer beam rebar slightly when conflict with column or shaft vertical bar.

5 No splicing of bars allowed in this region.

6 Field cut bars when needed to keep 2" clear concrete cover.

Notes:
For Top Plan and Part Elevation, see sheet 223of 292.
For Drilled Shaft Details, see sheet 225 of 292.
For additional notes, bar details, and Bill of Material, see sheets 226 , 227 and 228 of 292.
For Table 1, see sheet 226 of 292.
For Mechanical Splicer details, see sheet 248 of 292.

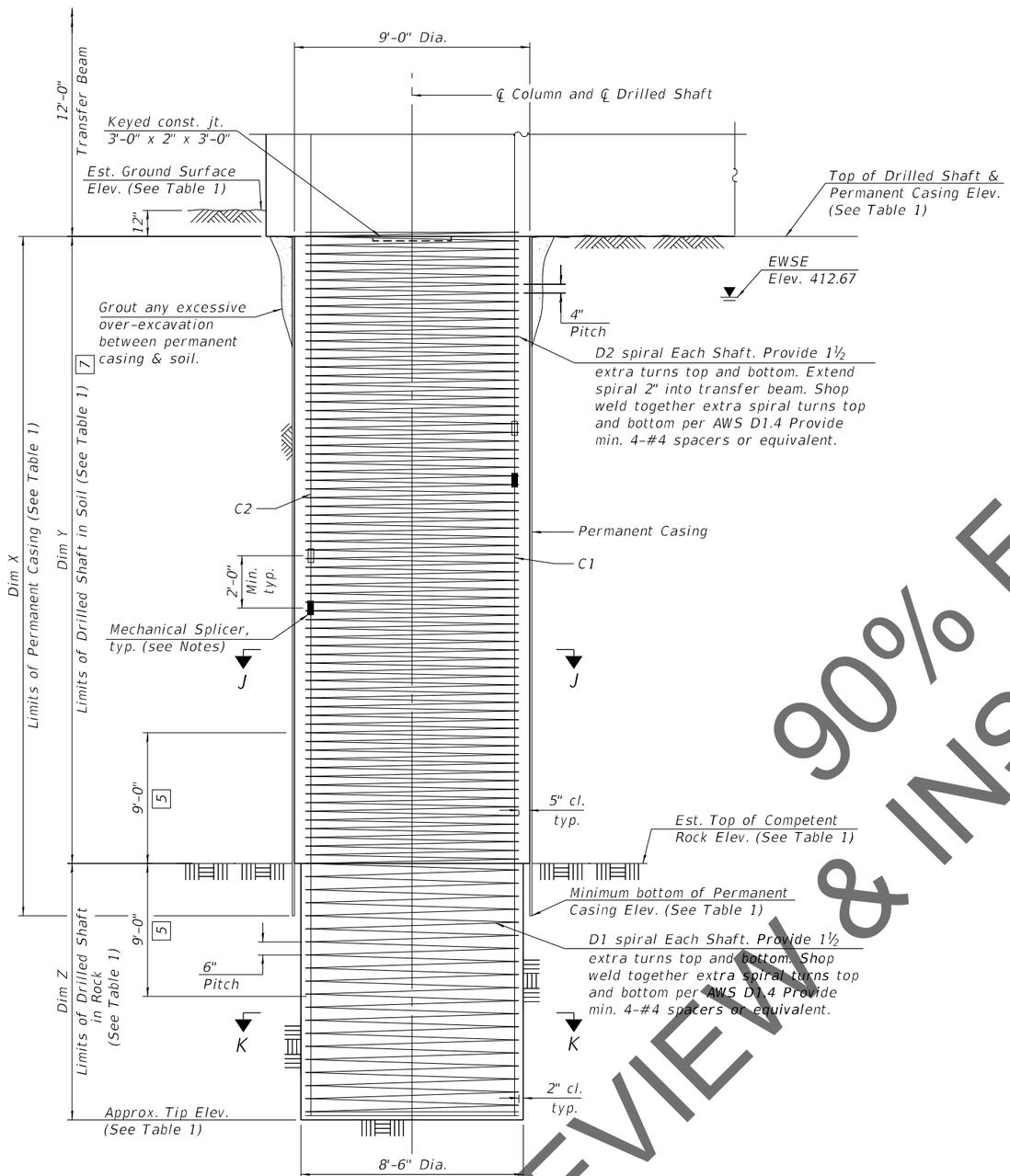

DRILLED SHAFT DETAIL

(One shaft shown, three shafts required, one under each column)

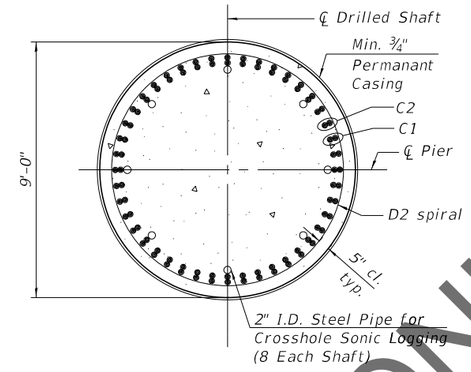

SECTION J-J

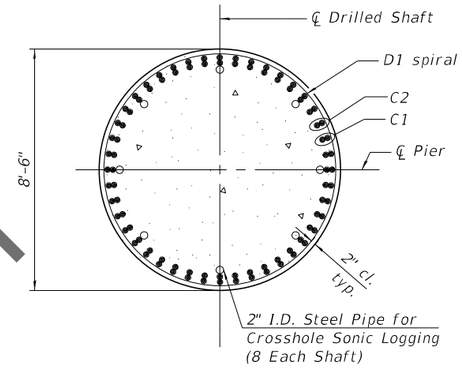

SECTION K-K

5 No splicing of bars allowed in this region.

7 If the prevailing water surface elevation during construction is consistently different than estimated on the plans, the contractor may propose an adjustment to the top of the drilled shaft elevation as part of their installation procedure. The top of all drilled shafts within a substructure unit shall be constructed to the same elevation and extend above the prevailing water surface. The quantities and reinforcement detailing are based on the top of shaft and the estimated elevations shown and may change based on the actual elevations encountered at each shaft and the final top of shaft elevation.

Notes:

For Pier Plan and Elevation, see Sheets 223 and 224 of 292.

For additional notes, bar details, and Bill of Materials, see sheets 227 and 228 of 292 .

For Table 1, see sheet 226 of 292.

For Mechanical Splicer Details, see sheet 248 of 292.

The Contractor may propose a construction joint in the drilled shaft so separate pours can be made, if the shaft can be poured in the dry, subject to approval from the Engineer.

The Permanent Casing is shown embedded 2 ft. into rock for estimate of quantities. The Contractor is responsible for determining the casing thickness and the actual tip elevation to be used. See Article 516.06(d) of the Standard Specifications. Pay Limits for the Permanent Casing shall be based on the minimum length shown.

When splicing of spiral reinforcement is necessary, the spirals shall be provided with 1 ½ extra turns at the ends to be spliced. These additional turns shall either be welded together according to AWS D1.4, or shall both terminate with a 135° standard hook.

Alternate location of mechanical splices of C1 bars every other bar. Alternate location of mechanical splices of C2 bars within each bundle.

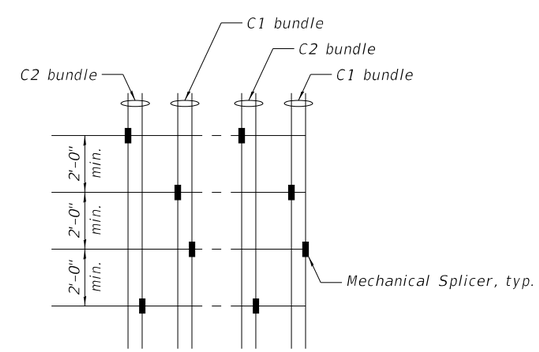

ALTERNATE MECHANICAL SPLICERS LOCATION

TABLE 1

		Pier 18	Pier 23
℄ Pier Station		1817+09.47	1828+89.47
Bearing Seat Elevation	Girder 1	451.74	445.84
	Girder 2	451.96	446.06
	Girder 3	452.15	446.25
	Girder 4	451.95	446.05
	Girder 5	451.76	445.85
	Girder 6	451.56	445.66
Top of Cap Elevation		451.56	445.66
Bottom of Cap Elevation		443.56	437.66
Column Height		16'-6⅝"	12'-7⅞"
Top of Shaft Elevation		415.00	413.00
Approx. Tip Elevation		317.50	320.00
Est. Ground Surface Elevation		416.00	414.00
Est. Top of Rock Elevation		343.00	333.50
Min. bottom of Permanent Casing Elevation		341.00	331.50
Dim X		74'-0"	81'-6"
Dim Y		72'-0"	79'-6"
Dim Z		25'-6"	13'-6"
S1		2 ⅝ "	2 ⅝ "
S2		2 ¼ "	2 ¼ "
S3		2 ⅜ "	2 ⅜ "
S4		2 ¼ "	2 ⅜ "
S5		2 ⅜ "	2 ¼ "

Pier 18 / Pier 23

Mark	Pier 18 Bar Callouts	Pier 23 Bar Callouts
(1)	43 sets of 1-#6 s1801(E) and 1-#6 s1805(E) at 5" cts.	43 sets of 1-#6 s2301(E) and 1-#6 s2305(E) at 5" cts.
(2)	11 sets of 2-#6 s1802(E) at 8" cts.	11 sets of 2-#6 s2302(E) at 8" cts.
(3)	6 sets of 4-#6 s1807(E) at 5" cts.	6 sets of 4-#6 s2307(E) at 5" cts.
(4)	47-#6 s1808(E) at abt. 8" cts.	47-#6 s2308(E) at abt. 8" cts.
(5)	33 sets of 1-#6 s1803(E) and 2-#6 s1806(E) at 6" cts.	33 sets of 1-#6 s2303(E) and 2-#6 s2306(E) at 6" cts.
(6)	17 sets of 2-#6 s1804(E) at 6" cts	17 sets of 2-#6 s2304(E) at 6" cts
(7)	18 sets of 2-#6 s1804(E) at 6" cts.	18 sets of 2-#6 s2304(E) at 6" cts.
(8)	14-#7 hp1802(E) hoops at 3"	14-#7 hp2302(E) hoops at 3"
(9)	44-#7 hp1802(E) hoops at 3"	44-#7 hp2302(E) hoops at 3"
(10)	33-#7 hp1801(E) hoops at 4"	33-#7 hp2301(E) hoops at 4"
T1	2 layers of 13-#11 p1801(E) or p1802(E) at 7⅜"	2 layers of 13-#11 p2301(E) or p2302(E) at 7⅜"
T2	14 bundles of 1-#11 p1805(E) (top) and 1-#11 p1806(E) (bot) at 12" max	14 bundles of 1-#11 p2305(E) (top) and 1-#11 p2306(E) (bot) at 12" max
B1	2 layers of 13-#11 p1803(E) at 7⅜"	2 layers of 13-#11 p2303(E) at 7⅜"
B2	11-#7 p1804(E) at 7⅜"	11-#7 p2304(E) at 7⅜"
B3	14 bundles of 1-#11 p1805(E) (bot) and 1-#11 p1806(E) (top) at 12" max	14 bundles of 1-#11 p2305(E) (bot) and 1-#11 p2306(E) (top) at 12" max
H1	10-#8 h1801(E) at 7½"	10-#8 h2301(E) at 7½"
H2	18-#9 h1802(E) at 7"	18-#9 h2302(E) at 7"
H3	10-#6 h1803(E) at abt. 9¾"	10-#6 h2303(E) at abt. 9¾"
A1	6 sets of 1-#7 u1803(E) & 1-#7 u1104(E) at 10½"	6 sets of 1-#7 u2303(E) & 1-#7 u2304(E) at 10½"
A2	10-#7 u1105(E) at 10¾"	10-#7 u2305(E) at 10¾"
U1	11-#8 u1801(E) space with h1801(E) and p1801(E)	11-#8 u2301(E) space with h2301(E) and p2301(E)
U2	20-#9 u1802(E) splice with h1802(E) and space with p1805(E)	20-#9 u2302(E) splice with h2302(E) and space with p2305(E)
C1	22 bundles of 2-#14 v1801(E) and 2-#14 v1802(E) alternate eq. spa.	22 bundles of 2-#14 v2301(E) and 2-#14 v2302(E) alternate eq. spa.
C2	22 bundles of 2-#14 v1803(E) and 2-#14 v1804(E) alternate eq. spa.	22 bundles of 2-#14 v2303(E) and 2-#14 v2304(E) alternate eq. spa.
C3	40-#11 v1805(E) eq. spa.	40-#11 v2305(E) eq. spa.
D1	#7 sp1801(E) at 6" pitch	#7 sp2301(E) at 6" pitch
D2	#7 sp1802(E) at 4" pitch	#7 sp2302(E) at 4" pitch
D3	#7 sp1803(E) at 3" pitch	#7 sp2303(E) at 3" pitch
K1	13-#5 s1809(E) spa. at 5"	13-#5 s2309(E) spa. at 5"
K2	3-#5 h1804(E) space with n1801(E)	3-#5 h2304(E) space with n2301(E)
K3	1-#5 h1804(E) ea. face	1-#5 h2304(E) ea. face
K4	2-#5 h1805(E) ea. face	2-#5 h2305(E) ea. face
K5	3-#5 n1801(E) at 12" ea. face	3-#5 n2301(E) at 12" ea. face
R	#5 s1810(E)	#5 s2310(E)

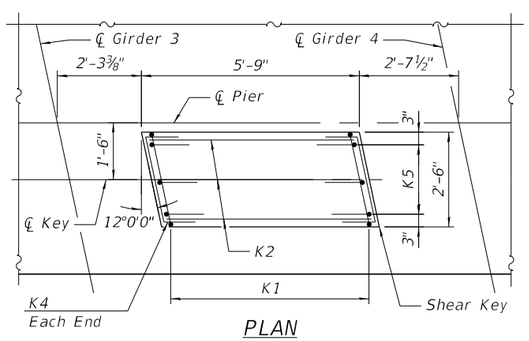

PLAN

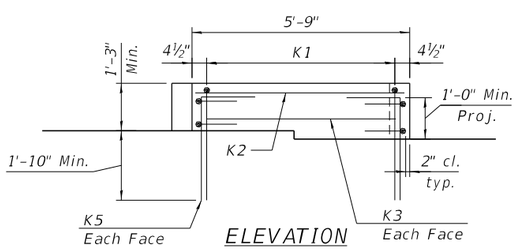

ELEVATION

SHEAR KEY DETAILS

Notes:
For Pier Plan and Elevation, see sheets 223, 224 and 225 of 292.
For bar details, see sheet 227 of 292.
For Bill of Material, see sheet 228 of 292.

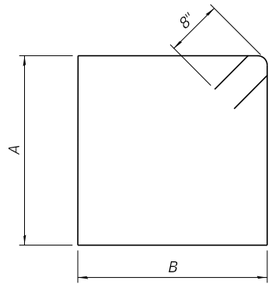

BARS s1801(E) & s1803(E)
BARS s2301(E) & s2303(E)

Bars	A	B
s1801(E) & s2301(E)	7' -8"	7' -8"
s1803(E) & s2303(E)	11' -8"	9' -4"

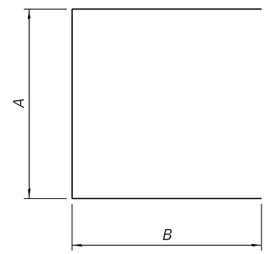

BARS s1802(E) & s1804(E) & s1807(E)
BARS s2302(E) & s2304(E) & s2307(E)

Bars	A	B
s1802(E) & s2302(E)	7' -8"	5' -10"
s1804(E) & s2304(E)	11' -8"	6' -8"
s1807(E) & s2307(E)	4' -10"	5' -10"

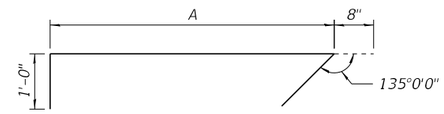

BARS s1805(E) & s1806(E)
BARS s2305(E) & s2306(E)

Bars	A
s1805(E) & s2305(E)	7' -8"
s1806(E) & s2306(E)	11' -8"

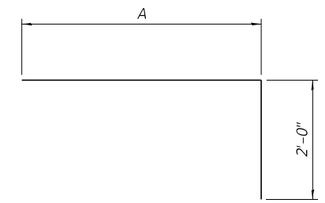

BARS p1801(E) & p1802(E)
BARS p2301(E) & p2302(E)

Bars	A
p1801(E) & p2301(E)	24' -0"
p1802(E) & p2302(E)	49' -5"

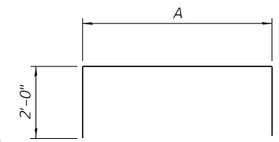

BARS p1805(E) & p1806(E)
BARS p2305(E) & p2306(E)

Bars	A
p1805(E) & p2305(E)	54' -2"
p1806(E) & p2306(E)	53' -8"

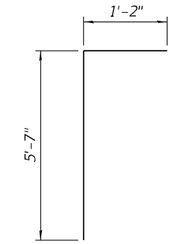

BARS u1803(E)
BARS u2303(E)

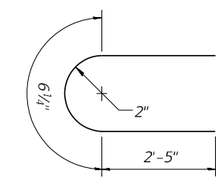

BARS s1810(E)
BARS s2310(E)

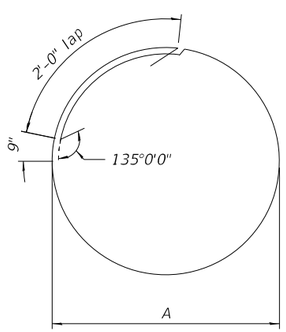

BARS hp1801(E) & hp1802(E)
BARS hp2301(E) & hp2302(E)

Bars	A
hp1801(E) & hp2301(E)	8' -2"
hp1802(E) & hp2302(E)	6' -8"

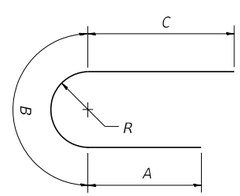

BARS u1801(E) & u1802(E)
BARS u2301(E) & u2302(E)

Bars	A	B	C	R
u1801(E) & u2301(E)	5' -4"	11' -9"	5' -4"	3' -9"
u1802(E) & u2302(E)	5' -9"	14' -5"	7' -9"	4' -7"

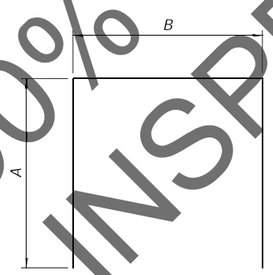

BARS u1805(E) & s1808(E)
BARS u2305(E) & s2308(E)

Bars	A	B
u1805(E) & u2305(E)	4' -7"	11' -6"
s1808(E) & s2308(E)	2' -9"	7' -8"

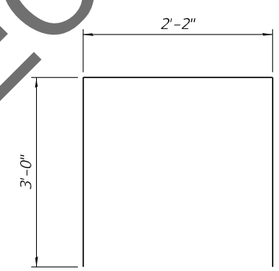

BARS s1809(E)
BARS s2309(E)

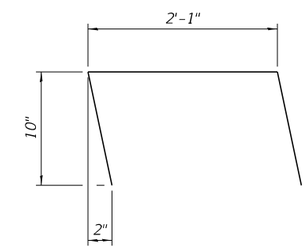

BARS h1805(E)
BARS h2305(E)

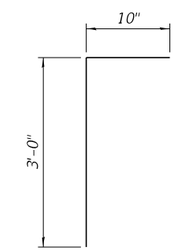

BARS n1801(E)
BARS n2301(E)

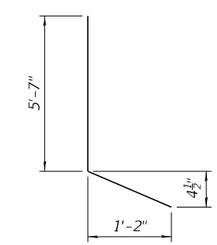

BARS u1804(E)
BARS u2304(E)

Pier 18

BILL OF MATERIAL

	Bar	No.	Size	Length	Shape
	h1801(E)	20	#8	56'-2"	
	h1802(E)	36	#9	38'-0"	
	h1803(E)	10	#6	31'-7"	
	h1804(E)	5	#5	5'-5"	
	h1805(E)	4	#5	3'-11"	
	hp1801(E)	99	#7	29'-2"	
	hp1802(E)	174	#7	24'-6"	
	n1801(E)	6	#5	3'-10"	
	p1801(E)	26	#11	26'-0"	
	p1802(E)	26	#11	51'-5"	
	p1803(E)	26	#11	57'-9"	
	p1804(E)	22	#7	2'-11"	
	p1805(E)	28	#11	58'-2"	
	p1806(E)	28	#11	57'-8"	
	s1801(E)	86	#6	32'-0"	
	s1802(E)	66	#6	19'-4"	
	s1803(E)	66	#6	43'-4"	
	s1804(E)	106	#6	25'-0"	
	s1805(E)	86	#6	9'-4"	
	s1806(E)	132	#6	13'-4"	
	s1807(E)	48	#6	16'-6"	
	s1808(E)	47	#6	13'-2"	
	s1809(E)	13	#5	8'-2"	
	s1810(E)	8	#5	5'-5"	
***	sp1801(E)	3	#7	24'-6"	
***	sp1802(E)	3	#7	73'-2"	
***	sp1803(E)	3	#7	16'-11"	
	u1801(E)	22	#8	22'-5"	
	u1802(E)	40	#9	27'-11"	
	u1803(E)	12	#7	6'-9"	
	u1804(E)	12	#7	6'-10"	
	u1805(E)	20	#7	20'-8"	
	v1801(E)	132	#14	53'-1"	
	v1802(E)	132	#14	55'-8"	
	v1803(E)	132	#14	50'-7"	
	v1804(E)	132	#14	58'-2"	
	v1805(E)	120	#11	35'-6"	
	Structure Excavation		Cu. Yd.	32	
	Concrete Structures		Cu. Yd.	479.3	
	Reinforcement Bars, Epoxy Coated		Pound	377,120	
	Permanent Casing		Foot	222	
	Drilled Shaft in Soil		Cu. Yd.	509	
	Drilled Shaft in Rock		Cu. Yd.	161	
	Crosshole Sonic Logging Access Ducts		Foot	293	
	Crosshole Sonic Logging Testing		Each	3	
	Thermal Integrity Profile Data Collection		Foot	293	
	Thermal Integrity Profile Testing		Each	3	

*** Length is height of spiral.

Pier 23

BILL OF MATERIAL

	Bar	No.	Size	Length	Shape
	h2301(E)	20	#8	56'-2"	
	h2302(E)	36	#9	38'-0"	
	h2303(E)	10	#6	31'-7"	
	h2304(E)	5	#5	5'-5"	
	h2305(E)	4	#5	3'-11"	
	hp2301(E)	99	#7	29'-2"	
	hp2302(E)	174	#7	24'-6"	
	n2301(E)	6	#5	3'-10"	
	p2301(E)	26	#11	26'-0"	
	p2302(E)	26	#11	51'-5"	
	p2303(E)	26	#11	57'-9"	
	p2304(E)	22	#7	2'-11"	
	p2305(E)	28	#11	58'-2"	
	p2306(E)	28	#11	57'-8"	
	s2301(E)	86	#6	32'-0"	
	s2302(E)	66	#6	19'-4"	
	s2303(E)	66	#6	43'-4"	
	s2304(E)	106	#6	25'-0"	
	s2305(E)	86	#6	9'-4"	
	s2306(E)	132	#6	13'-4"	
	s2307(E)	48	#6	16'-6"	
	s2308(E)	47	#6	13'-2"	
	s2309(E)	13	#5	8'-2"	
	s2310(E)	8	#5	5'-5"	
***	sp2301(E)	3	#7	12'-6"	
***	sp2302(E)	3	#7	80'-8"	
***	sp2303(E)	3	#7	13'-0"	
	u2301(E)	22	#8	22'-5"	
	u2302(E)	40	#9	27'-11"	
	u2303(E)	12	#7	6'-9"	
	u2304(E)	12	#7	6'-10"	
	u2305(E)	20	#7	20'-8"	
	v2301(E)	132	#14	50'-10"	
	v2302(E)	132	#14	53'-5"	
	v2303(E)	132	#14	48'-4"	
	v2304(E)	132	#14	55'-11"	
	v2305(E)	120	#11	31'-7"	
	Structure Excavation		Cu. Yd.	32	
	Concrete Structures		Cu. Yd.	462.8	
	Reinforcement Bars, Epoxy Coated		Pound	363,290	
	Permanent Casing		Foot	245	
	Drilled Shaft in Soil		Cu. Yd.	562	
	Drilled Shaft in Rock		Cu. Yd.	86	
	Crosshole Sonic Logging Access Ducts		Foot	279	
	Crosshole Sonic Logging Testing		Each	3	
	Thermal Integrity Profile Data Collection		Foot	279	
	Thermal Integrity Profile Testing		Each	3	

*** Length is height of spiral.

Notes:

For Pier Plan and Elevation, see sheets 223 thru 225 of 292.

For additional bar details, see sheets 226 and 227 of 292.

Pier 18 vertical load drilled shaft foundation design is based on side resistance in bedrock. For vertical load design, penetration into rock is required to achieve the factored resistance used in design (11,710kip). The limits shown for drilled shaft in rock is the minimum penetration required to achieve lateral fixity in rock for lateral load design.

Pier 23 vertical load drilled shaft foundation design is based on side resistance in bedrock. For vertical load design, penetration into rock is required to achieve the factored resistance used in design (5,949 kip). The limits shown for drilled shaft in rock is the minimum penetration required to achieve lateral fixity in rock for lateral load design.

The quantities and reinforcement detailing are based on the estimated top of competent rock and the estimated elevations shown and may change based on the actual elevations encountered at each shaft.

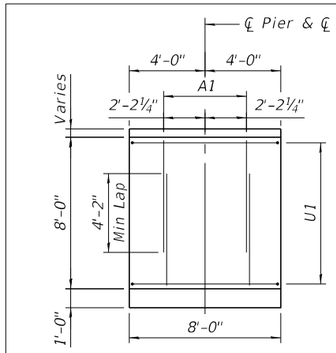

VIEW A-A

(T1 and (3) bars not shown for clarity)

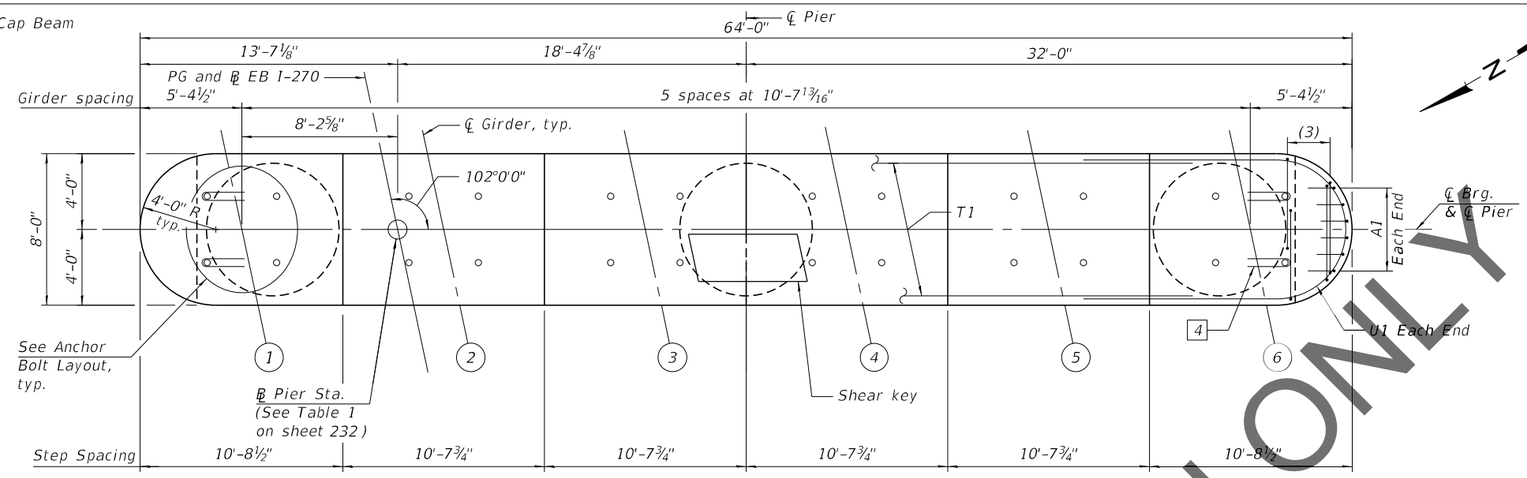

Notes:
Space reinforcement in cap to miss anchor bolts.
Pour steps monolithically with cap.

TOP PLAN

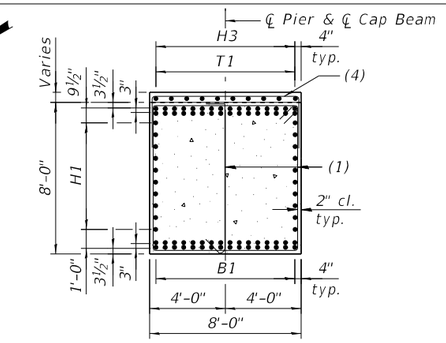

SECTION C-C

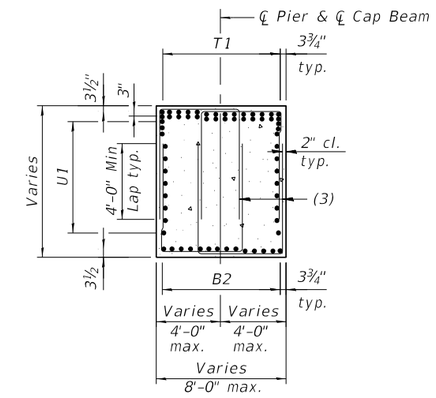

SECTION D-D

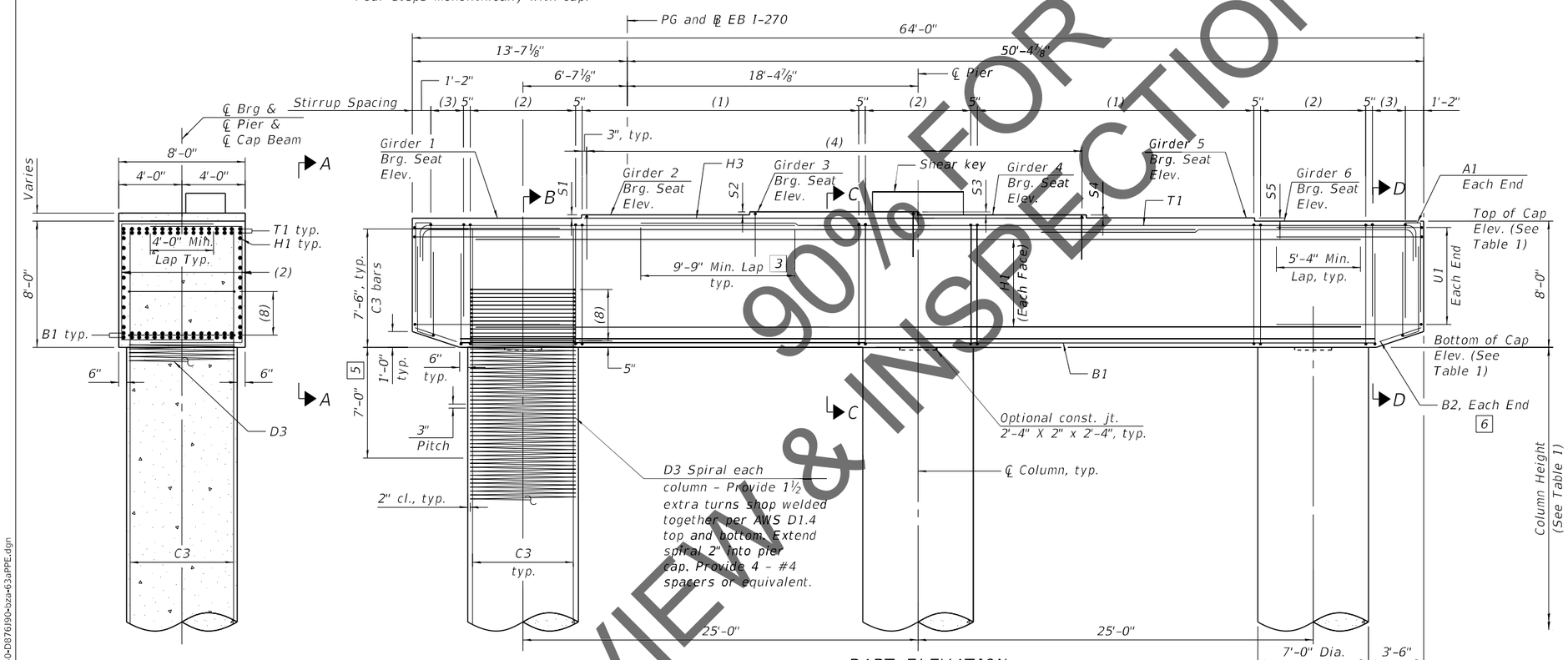

SECTION B-B

PART ELEVATION

(Looking East)

3 Alternate placement cap top rebars to stagger the laps

4 Provide 2 - R bar at each anchor shown. Place first R bar with top mat reinforcement and second R bar 6" below top U bar

5 No splicing of bars allowed in this region.

6 Field cut bars when needed to keep 2" clear concrete cover.

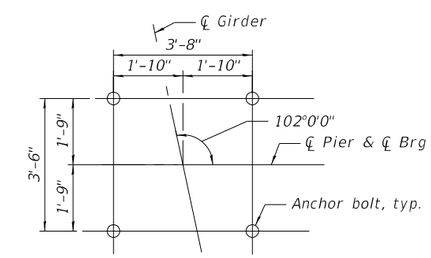

ANCHOR BOLTS LAYOUT

Notes:
For bar details and Bill of Materials see sheets 233 and 234 of 292.
For column height, step height and all Elevations, See Table 1 on sheet 232 of 292.
For bearing details, see sheet 160 of 292.
For bar callouts and shear key details, see sheet 232 of 292.

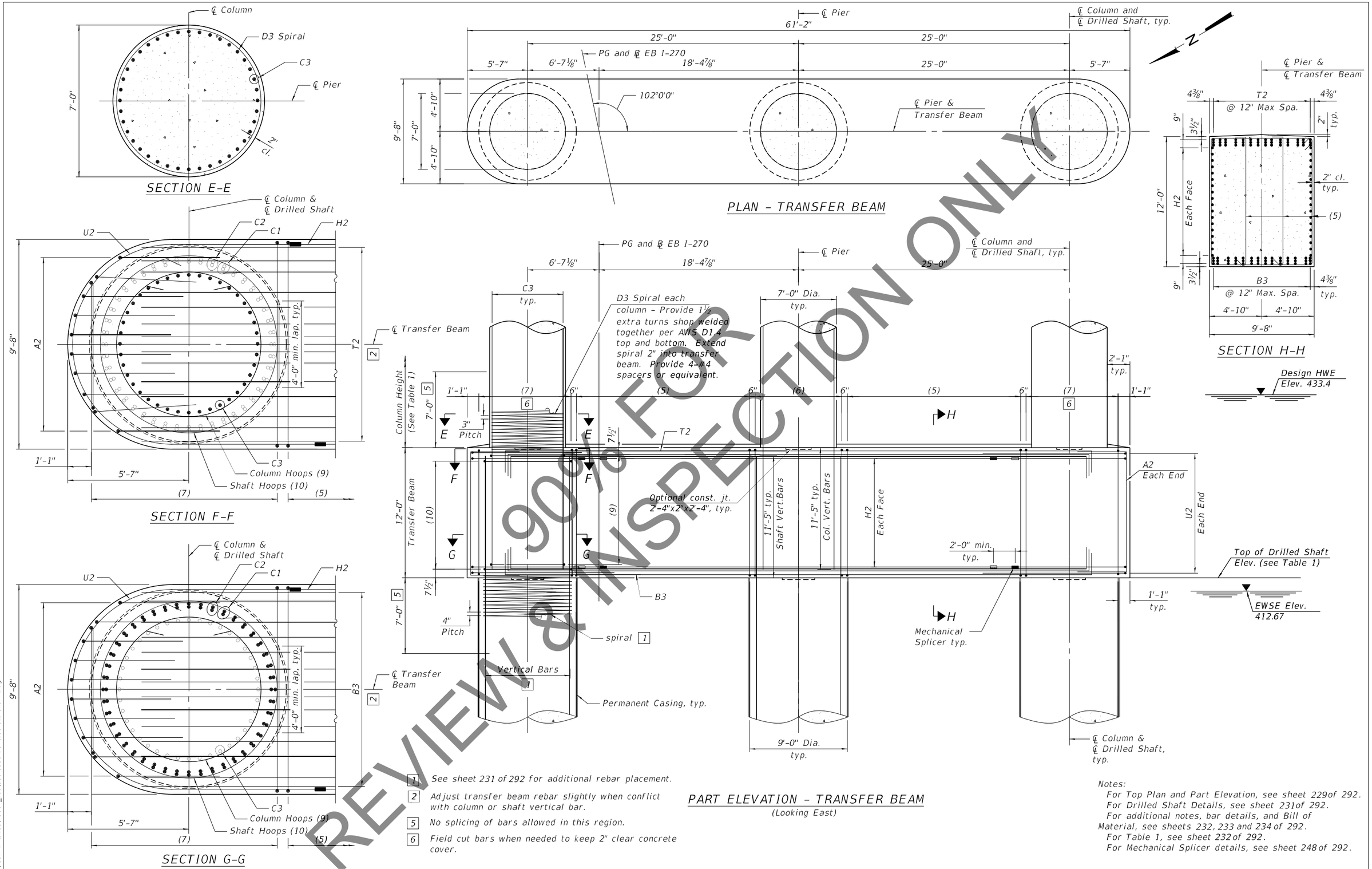

1. See sheet 231 of 292 for additional rebar placement.
2. Adjust transfer beam rebar slightly when conflict with column or shaft vertical bar.
5. No splicing of bars allowed in this region.
6. Field cut bars when needed to keep 2" clear concrete cover.

Notes:
For Top Plan and Part Elevation, see sheet 229 of 292.
For Drilled Shaft Details, see sheet 231 of 292.
For additional notes, bar details, and Bill of Material, see sheets 232, 233 and 234 of 292.
For Table 1, see sheet 232 of 292.
For Mechanical Splicer details, see sheet 248 of 292.

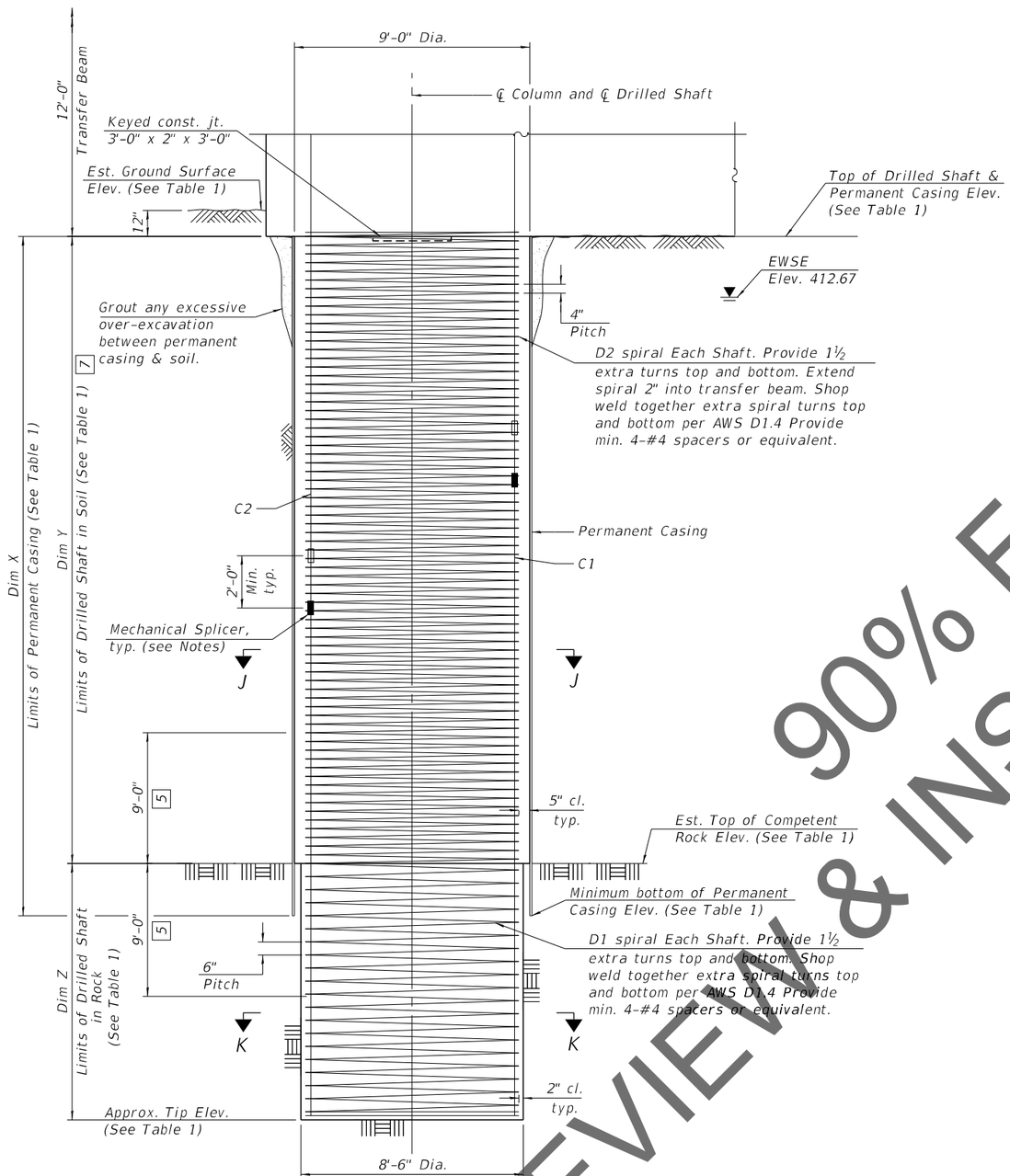

DRILLED SHAFT DETAIL

(One shaft shown, three shafts required, one under each column)

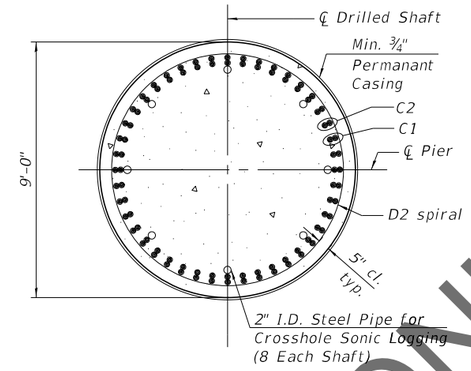

SECTION J-J

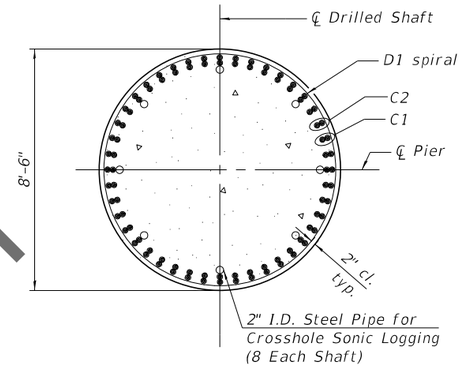

SECTION K-K

5 No splicing of bars allowed in this region.

7 If the prevailing water surface elevation during construction is consistently different than estimated on the plans, the contractor may propose an adjustment to the top of the drilled shaft elevation as part of their installation procedure. The top of all drilled shafts within a substructure unit shall be constructed to the same elevation and extend above the prevailing water surface. The quantities and reinforcement detailing are based on the top of shaft and the estimated elevations shown and may change based on the actual elevations encountered at each shaft and the final top of shaft elevation.

Notes:

For Pier Plan and Elevation, see Sheets 229 and 230 of 292.

For additional notes, bar details, and Bill of Materials, see sheets 233 and 234 of 292.

For Table 1, see sheet 232 of 292.

For Mechanical Splicer Details, see sheet 248 of 292.

The Contractor may propose a construction joint in the drilled shaft so separate pours can be made, if the shaft can be poured in the dry, subject to approval from the Engineer.

The Permanent Casing is shown embedded 2 ft. into rock for estimate of quantities. The Contractor is responsible for determining the casing thickness and the actual tip elevation to be used. See Article 516.06(d) of the Standard Specifications. Pay Limits for the Permanent Casing shall be based on the minimum length shown.

When splicing of spiral reinforcement is necessary, the spirals shall be provided with 1 ½ extra turns at the ends to be spliced. These additional turns shall either be welded together according to AWS D1.4, or shall both terminate with a 135° standard hook.

Alternate location of mechanical splices of C1 bars every other bar. Alternate location of mechanical splices of C2 bars within each bundle.

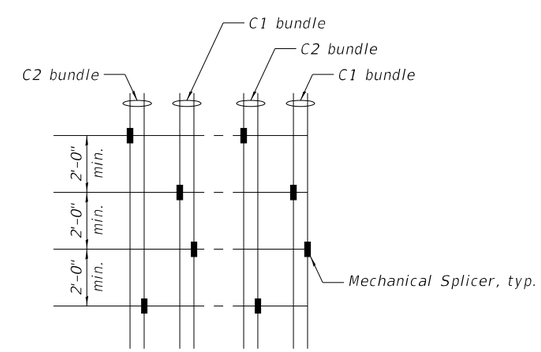

ALTERNATE MECHANICAL SPLICERS LOCATION

TABLE 1

		Pier 19	Pier 20	Pier 21	Pier 22
℄ Pier Station		1819+45.47	1821+81.47	1824+17.47	1826+53.47
Bearing Seat Elevation	Girder 1	450.63	449.45	448.27	447.09
	Girder 2	450.85	449.67	448.49	447.31
	Girder 3	451.04	449.86	448.68	447.50
	Girder 4	450.84	449.66	448.48	447.30
	Girder 5	450.65	449.46	448.28	447.10
	Girder 6	450.45	449.27	448.09	446.91
Top of Cap Elevation		450.45	449.27	448.09	446.91
Bottom of Cap Elevation		442.45	441.27	440.09	438.91
Column Height		15'-5⅜"	15'-9⅛"	13'-10⅝"	14'-2½"
Top of Shaft Elevation		415.00	413.50	414.20	412.70
Approx. Tip Elevation		326.00	325.50	323.70	323.20
Est. Ground Surface Elevation		416.00	414.50	415.20	413.70
Est. Top of Rock Elevation		339.50	339.00	337.20	336.70
Min. bottom of Permanent Casing Elevation		337.50	337.00	335.20	334.70
Dim X		77'-6"	76'-6"	79'-0"	78'-0"
Dim Y		75'-6"	74'-6"	77'-0"	76'-0"
Dim Z		13'-6"	13'-6"	13'-6"	13'-6"
S1		2 ⅝"	2 ⅝"	2 ⅝"	2 ⅝"
S2		2 ¼"	2 ¼"	2 ¼"	2 ¼"
S3		2 ⅜"	2 ⅜"	2 ⅜"	2 ⅜"
S4		2 ¼"	2 ⅜"	2 ⅜"	2 ⅜"
S5		2 ⅜"	2 ¼"	2 ¼"	2 ¼"

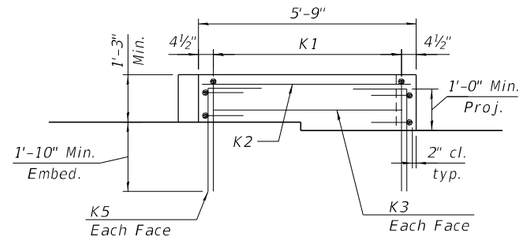

ELEVATION

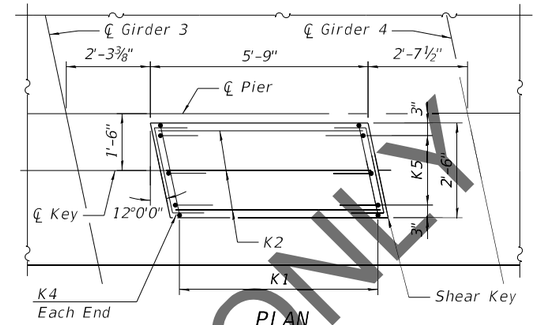

PLAN

SHEAR KEY DETAILS

Notes:
For Pier Plan and Elevation, see sheets 229, 230 and 231 of 292 .
For bar details, see sheet 233 of 292 .
For Bill of Material, see sheet 234 of 292 .

Mark	Pier 19 Bar Callouts	Pier 20 Bar Callouts	Pier 21 Bar Callouts	Pier 22 Bar Callouts
(1)	43 sets of 1-#6 s1901(E) and 1-#6 s1905(E) at 5" cts.	43 sets of 1-#6 s2001(E) and 1-#6 s2005(E) at 5" cts.	43 sets of 1-#6 s2101(E) and 1-#6 s2105(E) at 5" cts.	43 sets of 1-#6 s2201(E) and 1-#6 s2205(E) at 5" cts.
(2)	11 sets of 2-#6 s1902(E) at 8" cts.	11 sets of 2-#6 s2002(E) at 8" cts.	11 sets of 2-#6 s2102(E) at 8" cts.	11 sets of 2-#6 s2202(E) at 8" cts.
(3)	6 sets of 4-#6 s1907(E) at 5" cts.	6 sets of 4-#6 s2007(E) at 5" cts.	6 sets of 4-#6 s2107(E) at 5" cts.	6 sets of 4-#6 s2207(E) at 5" cts.
(4)	47-#6 s1908(E) at abt. 8" cts.	47-#6 s2008(E) at abt. 8" cts.	47-#6 s2108(E) at abt. 8" cts.	47-#6 s2208(E) at abt. 8" cts.
(5)	33 sets of 1-#6 s1903(E) and 2-#6 s1906(E) at 6" cts.	33 sets of 1-#6 s2003(E) and 2-#6 s2006(E) at 6" cts.	33 sets of 1-#6 s2103(E) and 2-#6 s2106(E) at 6" cts.	33 sets of 1-#6 s2203(E) and 2-#6 s2206(E) at 6" cts.
(6)	17 sets of 2-#6 s1904(E) at 6" cts	17 sets of 2-#6 s2004(E) at 6" cts	17 sets of 2-#6 s2104(E) at 6" cts	17 sets of 2-#6 s2204(E) at 6" cts
(7)	18 sets of 2-#6 s1904(E) at 6" cts.	18 sets of 2-#6 s2004(E) at 6" cts.	18 sets of 2-#6 s2104(E) at 6" cts.	18 sets of 2-#6 s2204(E) at 6" cts.
(8)	14-#7 hp1902(E) hoops at 3"	14-#7 hp2002(E) hoops at 3"	14-#7 hp2102(E) hoops at 3"	14-#7 hp2202(E) hoops at 3"
(9)	44-#7 hp1902(E) hoops at 3"	44-#7 hp2002(E) hoops at 3"	44-#7 hp2102(E) hoops at 3"	44-#7 hp2202(E) hoops at 3"
(10)	33-#7 hp1901(E) hoops at 4"	33-#7 hp2001(E) hoops at 4"	33-#7 hp2101(E) hoops at 4"	33-#7 hp2201(E) hoops at 4"
T1	2 layers of 16-#11 p1901(E) or p1902(E) at abt. 5⅞"	2 layers of 16-#11 p2001(E) or p2002(E) at abt. 5⅞"	2 layers of 16-#11 p2101(E) or p2102(E) at abt. 5⅞"	2 layers of 16-#11 p2201(E) or p2202(E) at abt. 5⅞"
T2	14 bundles of 1-#11 p1905(E) (top), 1-#11 p1906(E) (mid) and 1-#11 p1907(E) (bot) at 12" max	14 bundles of 1-#11 p2005(E) (top), 1-#11 p2006(E) (mid) and 1-#11 p2007(E) (bot) at 12" max	14 bundles of 1-#11 p2105(E) (top), 1-#11 p2106(E) (mid) and 1-#11 p2107(E) (bot) at 12" max	14 bundles of 1-#11 p2205(E) (top), 1-#11 p2206(E) (mid) and 1-#11 p2207(E) (bot) at 12" max
B1	2 layers of 16-#11 p1903(E) at abt. 5⅞"	2 layers of 16-#11 p2003(E) at abt. 5⅞"	2 layers of 16-#11 p2103(E) at abt. 5⅞"	2 layers of 16-#11 p2203(E) at abt. 5⅞"
B2	14-#7 p1904(E) at abt. 5⅞"	14-#7 p2004(E) at abt. 5⅞"	14-#7 p2104(E) at abt. 5⅞"	14-#7 p2204(E) at abt. 5⅞"
B3	14 bundles of 1-#11 p1905(E) (bot), 1-#11 p1906(E) (mid) and 1-#11 p1907(E) (top) at 12" max	14 bundles of 1-#11 p2005(E) (bot), 1-#11 p2006(E) (mid) and 1-#11 p2007(E) (top) at 12" max	14 bundles of 1-#11 p2105(E) (bot), 1-#11 p2106(E) (mid) and 1-#11 p2107(E) (top) at 12" max	14 bundles of 1-#11 p2205(E) (bot), 1-#11 p2206(E) (mid) and 1-#11 p2207(E) (top) at 12" max
H1	10-#8 h1901(E) at 7½"	10-#8 h2001(E) at 7½"	10-#8 h2101(E) at 7½"	10-#8 h2201(E) at 7½"
H2	18-#9 h1902(E) at 7"	18-#9 h2002(E) at 7"	18-#9 h2102(E) at 7"	18-#9 h2202(E) at 7"
H3	10-#6 h1903(E) at abt. 9¾"	10-#6 h2003(E) at abt. 9¾"	10-#6 h2103(E) at abt. 9¾"	10-#6 h2203(E) at abt. 9¾"
A1	6 sets of 1-#7 u1903(E) & 1-#7 u1904(E) at 10½"	6 sets of 1-#7 u2003(E) & 1-#7 u2004(E) at 10½"	6 sets of 1-#7 u2103(E) & 1-#7 u2104(E) at 10½"	6 sets of 1-#7 u2203(E) & 1-#7 u2204(E) at 10½"
A2	10-#7 u1905(E) at 10¾"	10-#7 u2005(E) at 10¾"	10-#7 u2105(E) at 10¾"	10-#7 u2205(E) at 10¾"
U1	11-#8 u1901(E) space with h1901(E) and p1901(E)	11-#8 u2001(E) space with h2001(E) and p2001(E)	11-#8 u2101(E) space with h2101(E) and p2101(E)	11-#8 u2201(E) space with h2201(E) and p2201(E)
U2	20-#9 u1902(E) splice with h1902(E) and space with p1905(E)	20-#9 u2002(E) splice with h2002(E) and space with p2005(E)	20-#9 u2102(E) splice with h2102(E) and space with p2105(E)	20-#9 u2202(E) splice with h2202(E) and space with p2205(E)
C1	22 bundles of 2-#14 v1901(E) and 2-#14 v1902(E) alternate eq. spa.	22 bundles of 2-#14 v2001(E) and 2-#14 v2002(E) alternate eq. spa.	22 bundles of 2-#14 v2101(E) and 2-#14 v2102(E) alternate eq. spa.	22 bundles of 2-#14 v2201(E) and 2-#14 v2202(E) alternate eq. spa.
C2	22 bundles of 2-#14 v1903(E) and 2-#14 v1904(E) alternate eq. spa.	22 bundles of 2-#14 v2003(E) and 2-#14 v2004(E) alternate eq. spa.	22 bundles of 2-#14 v2103(E) and 2-#14 v2104(E) alternate eq. spa.	22 bundles of 2-#14 v2203(E) and 2-#14 v2204(E) alternate eq. spa.
C3	40-#11 v1905(E) eq. spa.	40-#11 v2005(E) eq. spa.	40-#11 v2105(E) eq. spa.	40-#11 v2205(E) eq. spa.
D1	#7 sp1901(E) at 6" pitch	#7 sp2001(E) at 6" pitch	#7 sp2101(E) at 6" pitch	#7 sp2201(E) at 6" pitch
D2	#7 sp1902(E) at 4" pitch	#7 sp2002(E) at 4" pitch	#7 sp2102(E) at 4" pitch	#7 sp2202(E) at 4" pitch
D3	#7 sp1903(E) at 3" pitch	#7 sp2003(E) at 3" pitch	#7 sp2103(E) at 3" pitch	#7 sp2203(E) at 3" pitch
K1	13-#5 s1909(E) spa. at 5"	13-#5 s2009(E) spa. at 5"	13-#5 s2109(E) spa. at 5"	13-#5 s2209(E) spa. at 5"
K2	3-#5 h1904(E) space with n1901(E)	3-#5 h2004(E) space with n2001(E)	3-#5 h2104(E) space with n2101(E)	3-#5 h2204(E) space with n2201(E)
K3	1-#5 h1904(E) ea. face	1-#5 h2004(E) ea. face	1-#5 h2104(E) ea. face	1-#5 h2204(E) ea. face
K4	2-#5 h1905(E) ea. face	2-#5 h2005(E) ea. face	2-#5 h2105(E) ea. face	2-#5 h2205(E) ea. face
K5	3-#5 n1901(E) at 12" ea. face	3-#5 n2001(E) at 12" ea. face	3-#5 n2101(E) at 12" ea. face	3-#5 n2201(E) at 12" ea. face
R	#5 s1910(E)	#5 s2010(E)	#5 s2110(E)	#5 s2210(E)

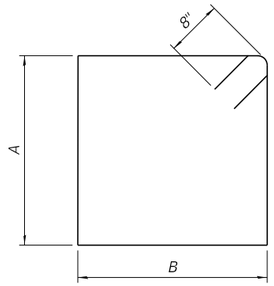

BARS s1901(E) & s1903(E)
BARS s2001(E) & s2003(E)
BARS s2101(E) & s2103(E)
BARS s2201(E) & s2203(E)

Bars	A	B
s1901(E) thru s2201(E)	7'-8"	7'-8"
s1903(E) thru s2203(E)	11'-8"	9'-4"

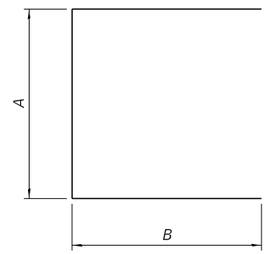

BARS s1902(E) & s1904(E) & s1907(E)
BARS s2002(E) & s2004(E) & s2007(E)
BARS s2102(E) & s2104(E) & s2107(E)
BARS s2202(E) & s2204(E) & s2207(E)

Bars	A	B
s1902(E) thru s2202(E)	7'-8"	5'-10"
s1904(E) thru s2204(E)	11'-8"	6'-8"
s1907(E) thru s2207(E)	4'-10"	5'-10"

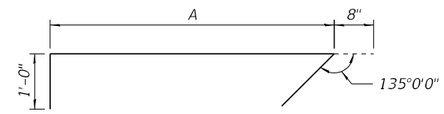

BARS s1905(E) & s1906(E)
BARS s2005(E) & s2006(E)
BARS s2105(E) & s2106(E)
BARS s2205(E) & s2206(E)

Bars	A
s1905(E) thru s2205(E)	7'-8"
s1906(E) thru s2206(E)	11'-8"

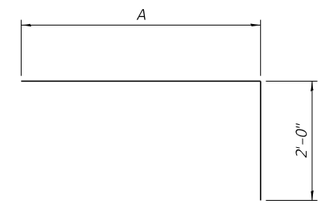

BARS p1901(E) & p1902(E)
BARS p2001(E) & p2002(E)
BARS p2101(E) & p2102(E)
BARS p2201(E) & p2202(E)

Bars	A
p1901(E) thru p2201(E)	24'-0"
p1902(E) thru p2202(E)	49'-5"

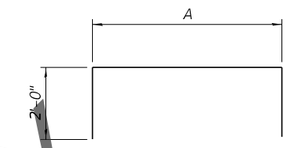

BARS p1905(E) & p1906(E) & p1907(E)
BARS p2005(E) & p2006(E) & p2007(E)
BARS p2105(E) & p2106(E) & p2107(E)
BARS p2205(E) & p2206(E) & p2207(E)

Bars	A
p1905(E) thru p2205(E)	54'-2"
p1906(E) thru p2206(E)	53'-8"
p1907(E) thru p2207(E)	53'-2"

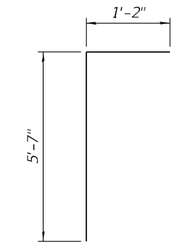

BARS u1903(E)
BARS u2003(E)
BARS u2103(E)
BARS u2203(E)

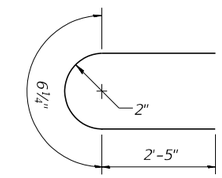

BARS s1910(E)
BARS s2010(E)
BARS s2110(E)
BARS s2210(E)

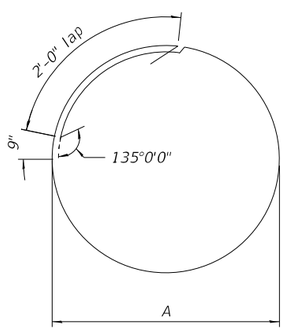

BARS hp1901(E) & hp1902(E)
BARS hp2001(E) & hp2002(E)
BARS hp2101(E) & hp2102(E)
BARS hp2201(E) & hp2202(E)

Bars	A
hp1901(E) thru hp2201(E)	8'-2"
hp1902(E) thru hp2202(E)	6'-8"

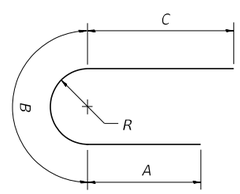

BARS u1901(E) & u1902(E)
BARS u2001(E) & u2002(E)
BARS u2101(E) & u2102(E)
BARS u2201(E) & u2202(E)

Bars	A	B	C	R
u1901(E) thru u2201(E)	5'-4"	11'-9"	5'-4"	3'-9"
u1902(E) thru u2202(E)	5'-9"	14'-5"	7'-9"	4'-7"

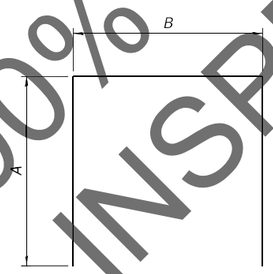

BARS u1905(E) & s1908(E)
BARS u2005(E) & s2008(E)
BARS u2105(E) & s2108(E)
BARS u2205(E) & s2208(E)

Bars	A	B
u1905(E) thru u2205(E)	4'-7"	11'-6"
s1908(E) thru s2208(E)	2'-9"	7'-8"

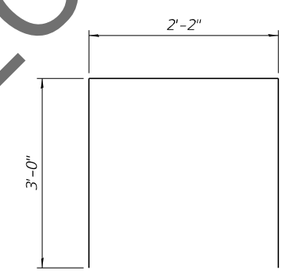

BARS s1909(E)
BARS s2009(E)
BARS s2109(E)
BARS s2209(E)

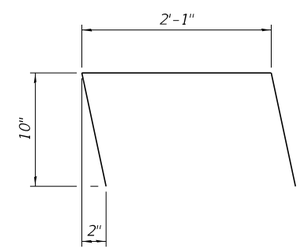

BARS h1905(E)
BARS h2005(E)
BARS h2105(E)
BARS h2205(E)

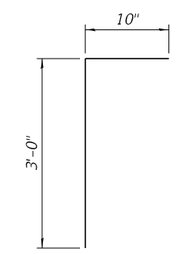

BARS n1901(E)
BARS n2001(E)
BARS n2101(E)
BARS n2201(E)

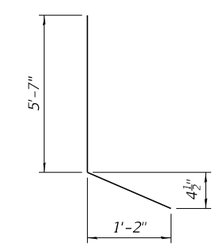

BARS u1904(E)
BARS u2004(E)
BARS u2104(E)
BARS u2204(E)

Pier 19

BILL OF MATERIAL

Bar	No.	Size	Length	Shape
h1901(E)	20	#8	56'-2"	
h1902(E)	36	#9	38'-0"	
h1903(E)	10	#6	31'-7"	
h1904(E)	5	#5	5'-5"	
h1905(E)	4	#5	3'-11"	
hp1901(E)	99	#7	29'-2"	
hp1902(E)	174	#7	24'-6"	
n1901(E)	6	#5	3'-10"	
p1901(E)	32	#11	26'-0"	
p1902(E)	32	#11	51'-5"	
p1903(E)	32	#11	57'-9"	
p1904(E)	28	#7	2'-11"	
p1905(E)	28	#11	58'-2"	
p1906(E)	28	#11	57'-8"	
p1907(E)	28	#11	57'-2"	
s1901(E)	86	#6	32'-0"	
s1902(E)	66	#6	19'-4"	
s1903(E)	66	#6	43'-4"	
s1904(E)	106	#6	25'-0"	
s1905(E)	86	#6	9'-4"	
s1906(E)	132	#6	13'-4"	
s1907(E)	48	#6	16'-6"	
s1908(E)	47	#6	13'-2"	
s1909(E)	13	#5	8'-2"	
s1910(E)	8	#5	5'-5"	
*** sp1901(E)	3	#7	12'-6"	
*** sp1902(E)	3	#7	76'-8"	
*** sp1903(E)	3	#7	15'-10"	
u1901(E)	22	#8	22'-5"	
u1902(E)	40	#9	27'-11"	
u1903(E)	12	#7	6'-9"	
u1904(E)	12	#7	6'-10"	
u1905(E)	20	#7	20'-8"	
v1901(E)	132	#14	48'-10"	
v1902(E)	132	#14	51'-5"	
v1903(E)	132	#14	46'-4"	
v1904(E)	132	#14	53'-11"	
v1905(E)	120	#11	34'-5"	

Structure Excavation	Cu. Yd.	32
Concrete Structures	Cu. Yd.	474.7
Reinforcement Bars, Epoxy Coated	Pound	369,430
Permanent Casing	Foot	233
Drilled Shaft in Soil	Cu. Yd.	534
Drilled Shaft in Rock	Cu. Yd.	86
Crosshole Sonic Logging Access Ducts	Foot	267
Crosshole Sonic Logging Testing	Each	3
Thermal Integrity Profile Data Collection	Foot	267
Thermal Integrity Profile Testing	Each	3

*** Length is height of spiral.

Pier 20

BILL OF MATERIAL

Bar	No.	Size	Length	Shape
h2001(E)	20	#8	56'-2"	
h2002(E)	36	#9	38'-0"	
h2003(E)	10	#6	31'-7"	
h2004(E)	5	#5	5'-5"	
h2005(E)	4	#5	3'-11"	
hp2001(E)	99	#7	29'-2"	
hp2002(E)	174	#7	24'-6"	
n2001(E)	6	#5	3'-10"	
p2001(E)	32	#11	26'-0"	
p2002(E)	32	#11	51'-5"	
p2003(E)	32	#11	57'-9"	
p2004(E)	28	#7	2'-11"	
p2005(E)	28	#11	58'-2"	
p2006(E)	28	#11	57'-8"	
p2007(E)	28	#11	57'-2"	
s2001(E)	86	#6	32'-0"	
s2002(E)	66	#6	19'-4"	
s2003(E)	66	#6	43'-4"	
s2004(E)	106	#6	25'-0"	
s2005(E)	86	#6	9'-4"	
s2006(E)	132	#6	13'-4"	
s2007(E)	48	#6	16'-6"	
s2008(E)	47	#6	13'-2"	
s2009(E)	13	#5	8'-2"	
s2010(E)	8	#5	5'-5"	
*** sp2001(E)	3	#7	12'-6"	
*** sp2002(E)	3	#7	75'-8"	
*** sp2003(E)	3	#7	16'-2"	
u2001(E)	22	#8	22'-5"	
u2002(E)	40	#9	27'-11"	
u2003(E)	12	#7	6'-9"	
u2004(E)	12	#7	6'-10"	
u2005(E)	20	#7	20'-8"	
v2001(E)	132	#14	48'-4"	
v2002(E)	132	#14	50'-11"	
v2003(E)	132	#14	45'-10"	
v2004(E)	132	#14	53'-5"	
v2005(E)	120	#11	34'-9"	

Structure Excavation	Cu. Yd.	32
Concrete Structures	Cu. Yd.	476.0
Reinforcement Bars, Epoxy Coated	Pound	367,330
Permanent Casing	Foot	230
Drilled Shaft in Soil	Cu. Yd.	527
Drilled Shaft in Rock	Cu. Yd.	86
Crosshole Sonic Logging Access Ducts	Foot	264
Crosshole Sonic Logging Testing	Each	3
Thermal Integrity Profile Data Collection	Foot	264
Thermal Integrity Profile Testing	Each	3

*** Length is height of spiral.

Pier 21

BILL OF MATERIAL

Bar	No.	Size	Length	Shape
h2101(E)	20	#8	56'-2"	
h2102(E)	36	#9	38'-0"	
h2103(E)	10	#6	31'-7"	
h2104(E)	5	#5	5'-5"	
h2105(E)	4	#5	3'-11"	
hp2101(E)	99	#7	29'-2"	
hp2102(E)	174	#7	24'-6"	
n2101(E)	6	#5	3'-10"	
p2101(E)	32	#11	26'-0"	
p2102(E)	32	#11	51'-5"	
p2103(E)	32	#11	57'-9"	
p2104(E)	28	#7	2'-11"	
p2105(E)	28	#11	58'-2"	
p2106(E)	28	#11	57'-8"	
p2107(E)	28	#11	57'-2"	
s2101(E)	86	#6	32'-0"	
s2102(E)	66	#6	19'-4"	
s2103(E)	66	#6	43'-4"	
s2104(E)	106	#6	25'-0"	
s2105(E)	86	#6	9'-4"	
s2106(E)	132	#6	13'-4"	
s2107(E)	48	#6	16'-6"	
s2108(E)	47	#6	13'-2"	
s2109(E)	13	#5	8'-2"	
s2110(E)	8	#5	5'-5"	
*** sp2101(E)	3	#7	12'-6"	
*** sp2102(E)	3	#7	78'-2"	
*** sp2103(E)	3	#7	14'-3"	
u2101(E)	22	#8	22'-5"	
u2102(E)	40	#9	27'-11"	
u2103(E)	12	#7	6'-9"	
u2104(E)	12	#7	6'-10"	
u2105(E)	20	#7	20'-8"	
v2101(E)	132	#14	49'-7"	
v2102(E)	132	#14	52'-2"	
v2103(E)	132	#14	47'-1"	
v2104(E)	132	#14	54'-8"	
v2105(E)	120	#11	32'-10"	

Structure Excavation	Cu. Yd.	32
Concrete Structures	Cu. Yd.	467.9
Reinforcement Bars, Epoxy Coated	Pound	371,350
Permanent Casing	Foot	237
Drilled Shaft in Soil	Cu. Yd.	545
Drilled Shaft in Rock	Cu. Yd.	86
Crosshole Sonic Logging Access Ducts	Foot	272
Crosshole Sonic Logging Testing	Each	3
Thermal Integrity Profile Data Collection	Foot	272
Thermal Integrity Profile Testing	Each	3

*** Length is height of spiral.

Pier 22

BILL OF MATERIAL

Bar	No.	Size	Length	Shape
h2201(E)	20	#8	56'-2"	
h2202(E)	36	#9	38'-0"	
h2203(E)	10	#6	31'-7"	
h2204(E)	5	#5	5'-5"	
h2205(E)	4	#5	3'-11"	
hp2201(E)	99	#7	29'-2"	
hp2202(E)	174	#7	24'-6"	
n2201(E)	6	#5	3'-10"	
p2201(E)	32	#11	26'-0"	
p2202(E)	32	#11	51'-5"	
p2203(E)	32	#11	57'-9"	
p2204(E)	28	#7	2'-11"	
p2205(E)	28	#11	58'-2"	
p2206(E)	28	#11	57'-8"	
p2207(E)	28	#11	57'-2"	
s2201(E)	86	#6	32'-0"	
s2202(E)	66	#6	19'-4"	
s2203(E)	66	#6	43'-4"	
s2204(E)	106	#6	25'-0"	
s2205(E)	86	#6	9'-4"	
s2206(E)	132	#6	13'-4"	
s2207(E)	48	#6	16'-6"	
s2208(E)	47	#6	13'-2"	
s2209(E)	13	#5	8'-2"	
s2210(E)	8	#5	5'-5"	
*** sp2201(E)	3	#7	12'-6"	
*** sp2202(E)	3	#7	77'-2"	
*** sp2203(E)	3	#7	14'-7"	
u2201(E)	22	#8	22'-5"	
u2202(E)	40	#9	27'-11"	
u2203(E)	12	#7	6'-9"	
u2204(E)	12	#7	6'-10"	
u2205(E)	20	#7	20'-8"	
v2201(E)	132	#14	49'-1"	
v2202(E)	132	#14	51'-8"	
v2203(E)	132	#14	46'-7"	
v2204(E)	132	#14	54'-2"	
v2205(E)	120	#11	33'-2"	

Structure Excavation	Cu. Yd.	32
Concrete Structures	Cu. Yd.	469.4
Reinforcement Bars, Epoxy Coated	Pound	369,240
Permanent Casing	Foot	234
Drilled Shaft in Soil	Cu. Yd.	538
Drilled Shaft in Rock	Cu. Yd.	86
Crosshole Sonic Logging Access Ducts	Foot	269
Crosshole Sonic Logging Testing	Each	3
Thermal Integrity Profile Data Collection	Foot	269
Thermal Integrity Profile Testing	Each	3

*** Length is height of spiral.

Notes:

For Pier Plan and Elevation, see sheets 229 thru 231 of 292.

For additional bar details, see sheets 232 and 233 of 292.

Pier 19 vertical load drilled shaft foundation design is based on side resistance in bedrock. For vertical load design, penetration into rock is required to achieve the factored resistance used in design (6,481 kip). The limits shown for drilled shaft in rock is the minimum penetration required to achieve lateral fixity in rock for lateral load design.

Pier 20 vertical load drilled shaft foundation design is based on end bearing in bedrock. For vertical load design, penetration into rock is required to achieve the factored resistance used in design (24,804 kip). The limits shown for drilled shaft in rock is the minimum penetration required to achieve lateral fixity in rock for lateral load design.

Pier 21 vertical load drilled shaft foundation design is based on side resistance in bedrock. For vertical load design, penetration into rock is required to achieve the factored resistance used in design (6,122 kip). The limits shown for drilled shaft in rock is the minimum penetration required to achieve lateral fixity in rock for lateral load design.

Pier 22 vertical load drilled shaft foundation design is based on end bearing in bedrock. For vertical load design, penetration into rock is required to achieve the factored resistance used in design (25,114 kip). The limits shown for drilled shaft in rock is the minimum penetration required to achieve lateral fixity in rock for lateral load design.

The quantities and reinforcement detailing are based on the estimated top of competent rock and the estimated elevations shown and may change based on the actual elevations encountered at each shaft.

Wet construction methods within permament casing may be required. The Contractor's installation procedure shall clearly address cleaning and inspection methods proposed for use with wet construction methods which will ensure adequate end bearing on rock is achieved.

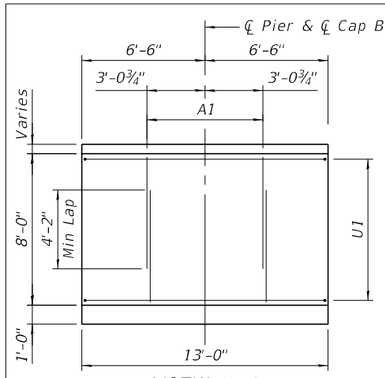

VIEW A-A

(T1 and (3) bars not shown for clarity)

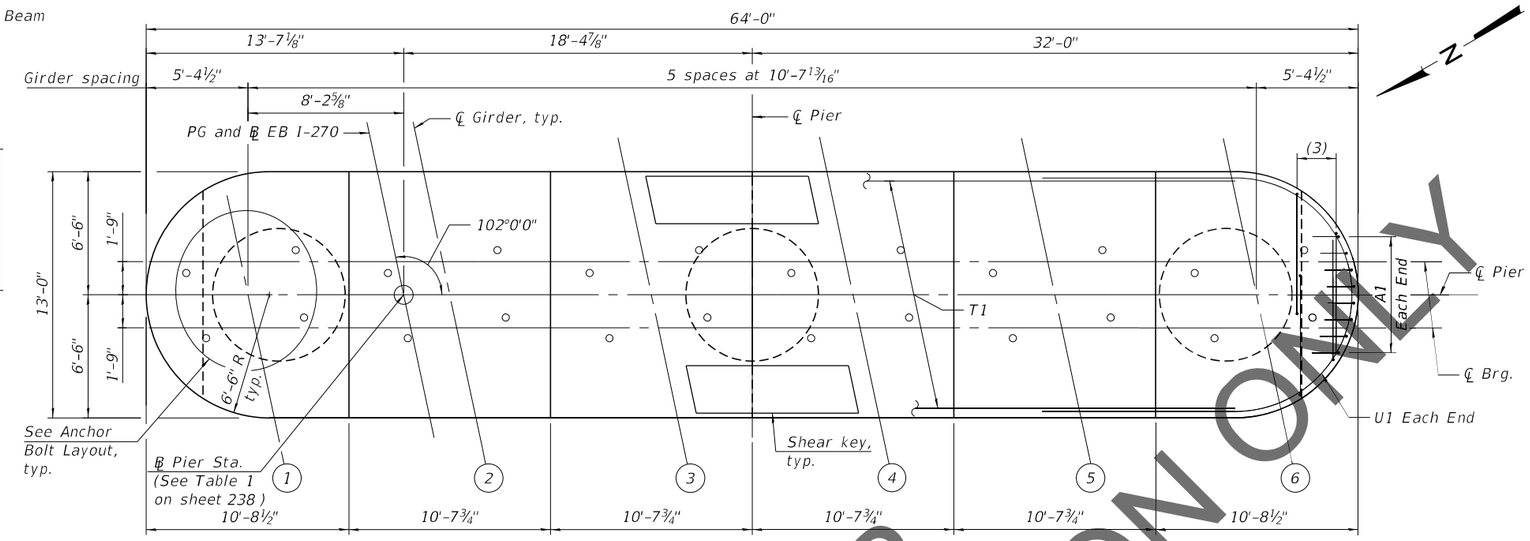

Notes:
Space reinforcement in cap to miss anchor bolts.
Pour steps monolithically with cap.

TOP PLAN

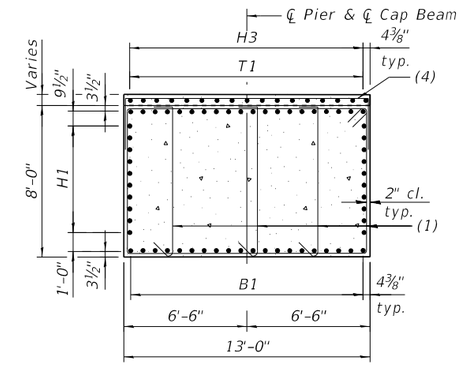

SECTION C-C

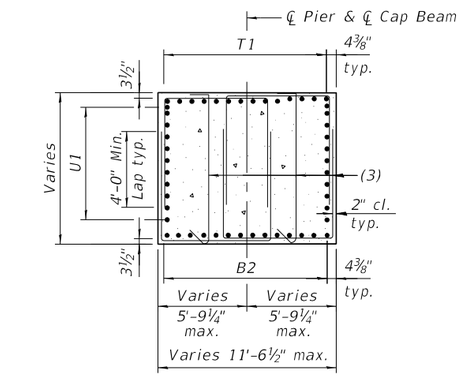

SECTION D-D

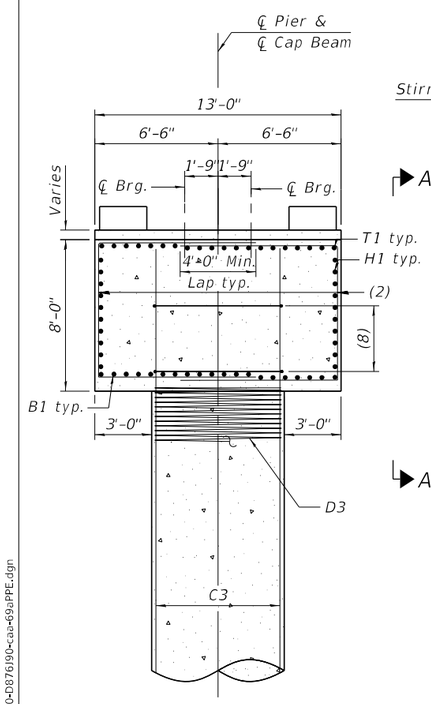

SECTION B-B

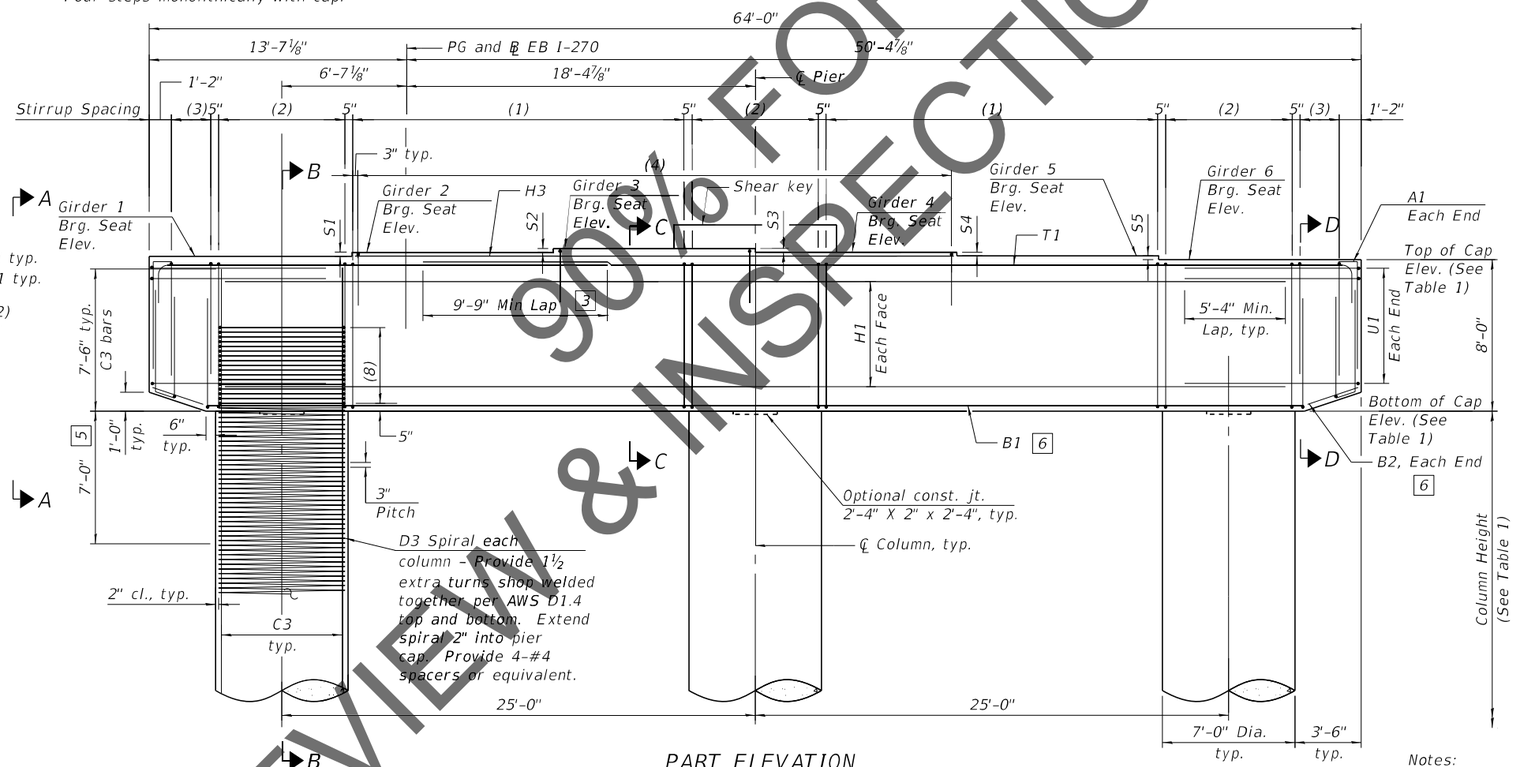

PART ELEVATION

(Looking East)

3 Alternate placement cap top rebars to stagger the laps

5 No splicing of bars allowed in this region.

6 Field cut bars when needed to keep 2" clear concrete cover.

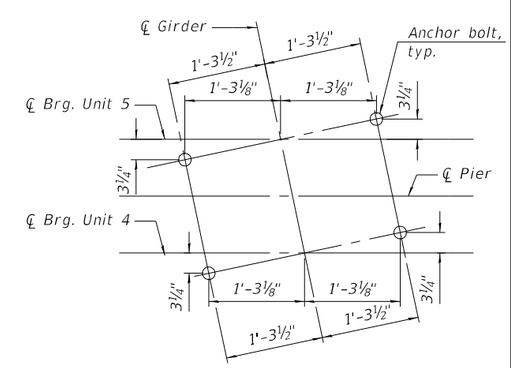

ANCHOR BOLTS LAYOUT

Notes:
For bar details and Bill of Materials see sheets 239 and 240 of 292.
For column height, step height and all elevations, See Table 1 on sheet 238 of 292.
For bearing details, Unit 4, see sheet 159 of 292. for bearing details, Unit 5, see sheet 162 of 292.
For bar callouts and shear key details, see sheet 238 of 292.

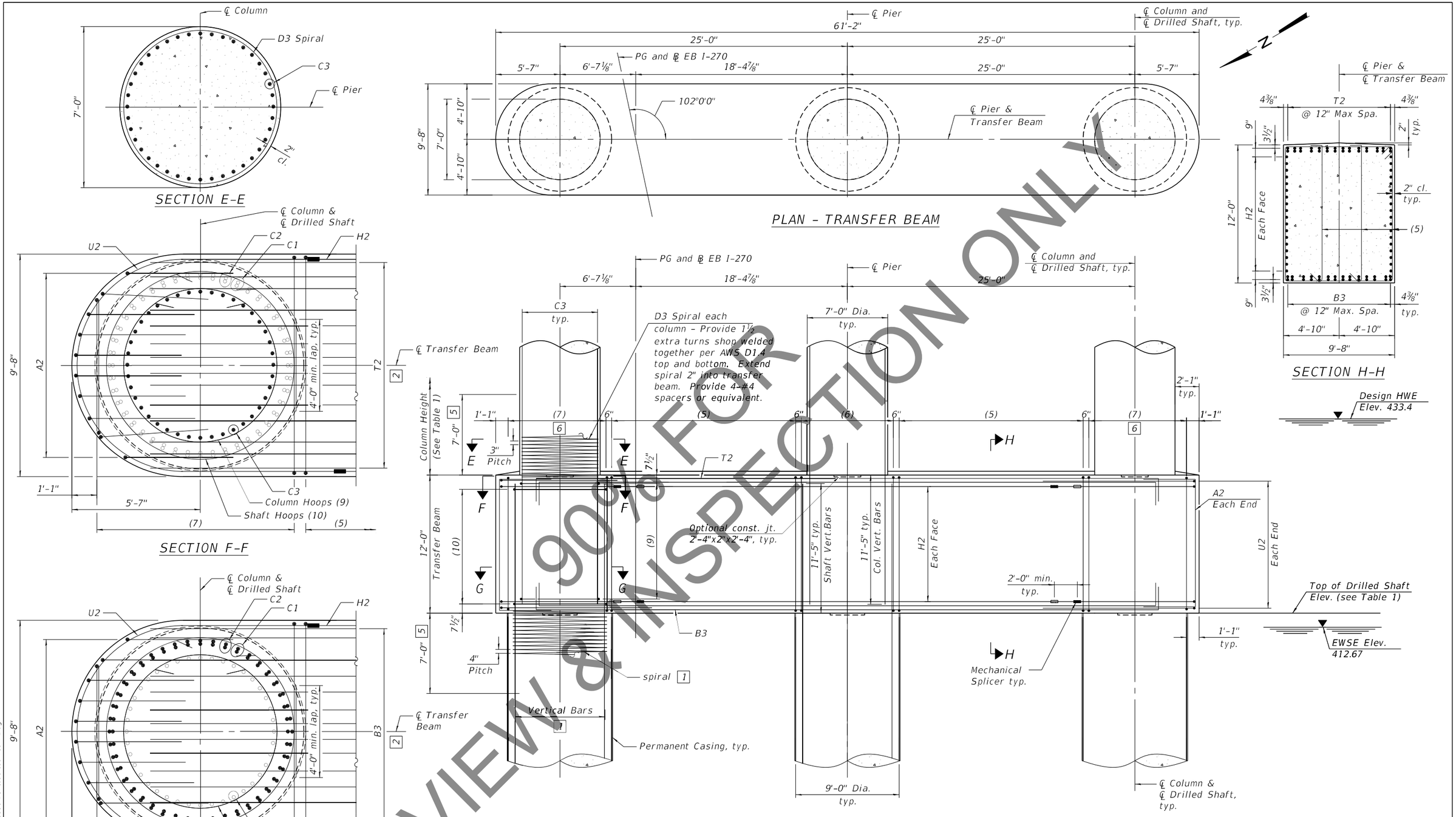

1. See sheet 237 of 292 for additional rebar placement.
2. Adjust transfer beam rebar slightly when conflict with column or shaft vertical bar.
5. No splicing of bars allowed in this region.
6. Field cut bars when needed to keep 2" clear concrete cover.

Notes:
For Top Plan and Part Elevation, see sheet 235 of 292.
For Drilled Shaft Details, see sheet 237 of 292.
For additional notes, bar details, and Bill of Material, see sheets 238, 239 and 240 of 292.
For Table 1, see sheet 238 of 292.
For Mechanical Splicer details, see sheet 248 of 292.

MODEL: Default
FILE NAME: C:\PCS4PDF\9175\45087_262\060-0350-D876190-sa+70aPPE.dgn
9/10/2021 4:39:36 PM

HORNER & SHIFRIN
Teaming with: PARSONS

USER NAME =	DESIGNED - GX	REVISED -	
	CHECKED - TMB	REVISED -	
PLOT SCALE =	DRAWN - JG	REVISED -	
PLOT DATE =	CHECKED - TMB	REVISED -	

STATE OF ILLINOIS
DEPARTMENT OF TRANSPORTATION

PIER 24 PLAN AND ELEVATION - 2
STRUCTURE NO. 060-0350 (EB)

SHEET 236 OF 292 SHEETS

F.A.I. RTE.	SECTION	COUNTY	TOTAL SHEETS	SHEET NO.
270	60B-1	MADISON	860	436
		CONTRACT NO. 76J90		
		ILLINOIS FED. AID PROJECT		

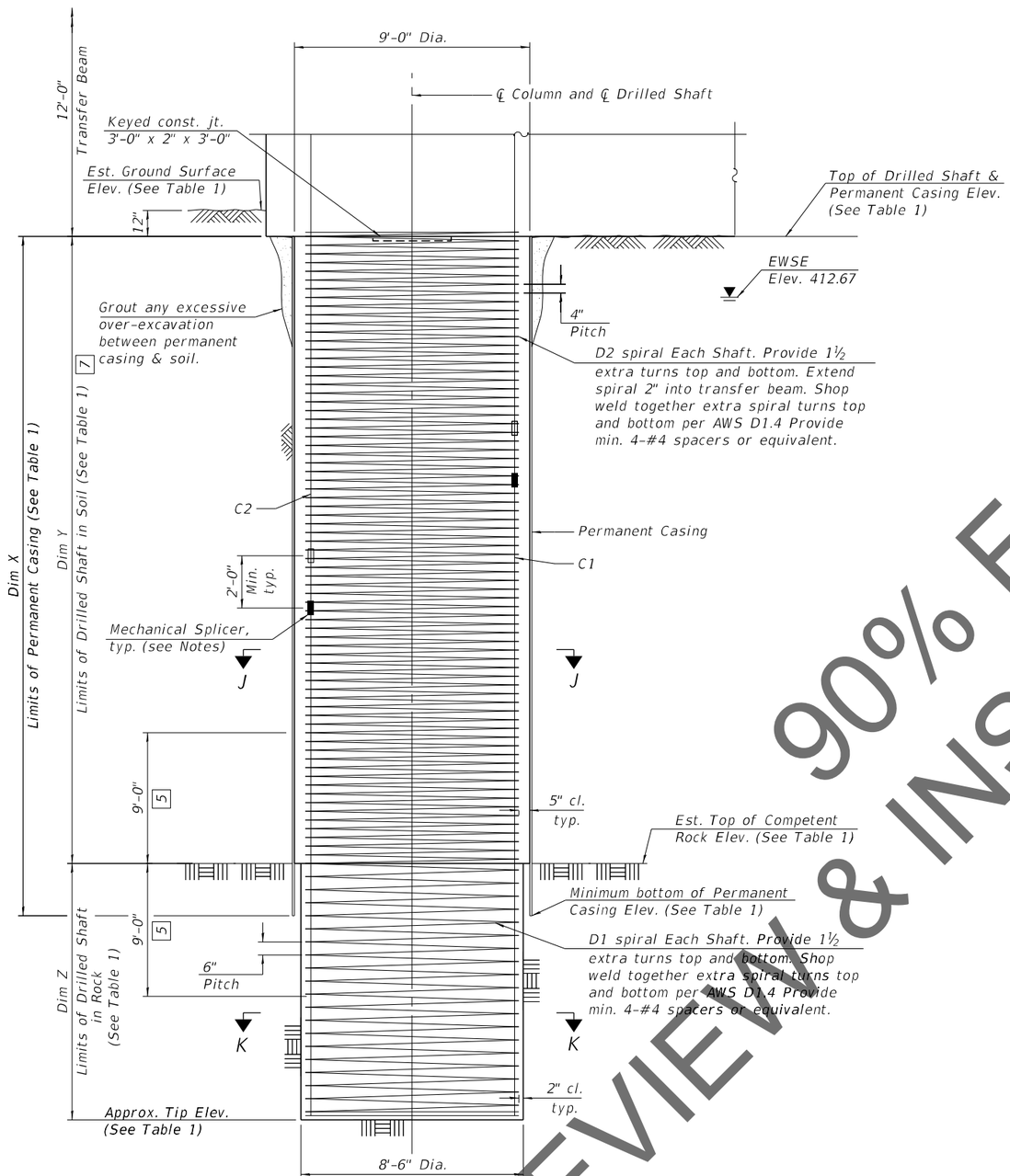

DRILLED SHAFT DETAIL

(One shaft shown, three shafts required, one under each column)

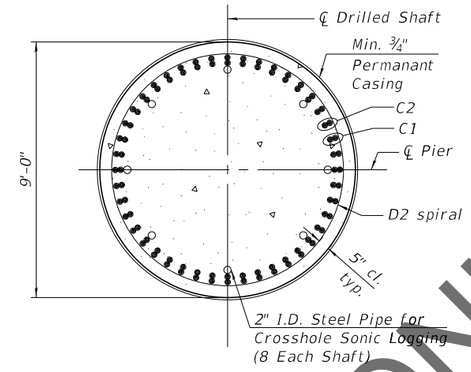

SECTION J-J

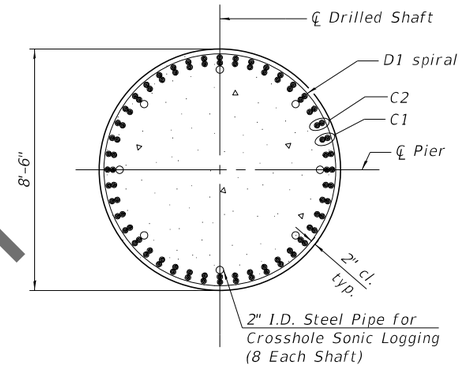

SECTION K-K

5 No splicing of bars allowed in this region.

7 If the prevailing water surface elevation during construction is consistently different than estimated on the plans, the contractor may propose an adjustment to the top of the drilled shaft elevation as part of their installation procedure. The top of all drilled shafts within a substructure unit shall be constructed to the same elevation and extend above the prevailing water surface. The quantities and reinforcement detailing are based on the top of shaft and the estimated elevations shown and may change based on the actual elevations encountered at each shaft and the final top of shaft elevation.

Notes:

For Pier Plan and Elevation, see Sheets 235 and 236 of 292.

For additional notes, bar details, and Bill of Materials, see sheets 239 and 240 of 292.

For Table 1, see sheet 238 of 292.

For Mechanical Splicer Details, see sheet 248 of 292.

The Contractor may propose a construction joint in the drilled shaft so separate pours can be made, if the shaft can be poured in the dry, subject to approval from the Engineer.

The Permanent Casing is shown embedded 2 ft. into rock for estimate of quantities. The Contractor is responsible for determining the casing thickness and the actual tip elevation to be used. See Article 516.06(d) of the Standard Specifications. Pay Limits for the Permanent Casing shall be based on the minimum length shown.

When splicing of spiral reinforcement is necessary, the spirals shall be provided with 1 ½ extra turns at the ends to be spliced. These additional turns shall either be welded together according to AWS D1.4, or shall both terminate with a 135° standard hook.

Alternate location of mechanical splices of C1 bars every other bar. Alternate location of mechanical splices of C2 bars within each bundle.

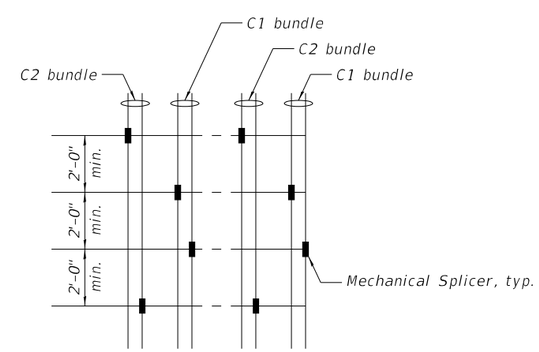

ALTERNATE MECHANICAL SPLICERS LOCATION

TABLE 1

		Pier 24
℄ Pier Station		1830+75.02
Bearing Seat Elevation	Girder 1	445.19
	Girder 2	445.41
	Girder 3	445.60
	Girder 4	445.40
	Girder 5	445.21
	Girder 6	445.01
Top of Cap Elevation		445.01
Bottom of Cap Elevation		437.01
Column Height		12'-9⅝"
Top of Shaft Elevation		412.20
Approx. Tip Elevation		318.70
Est. Ground Surface Elevation		413.20
Est. Top of Rock Elevation		332.20
Min. bottom of Permanent Casing Elevation		330.20
Dim X		82'-0"
Dim Y		80'-0"
Dim Z		13'-6"
S1		2 ⅝ "
S2		2 ¼ "
S3		2 ⅜ "
S4		2 ¼ "
S5		2 ⅜ "

Pier 24

Mark	Bar Callouts
(1)	43 sets of 1-#6 s2401(E) and 3-#6 s2405(E) at 5" cts.
(2)	11 sets of 2-#6 s2402(E) at 8" cts.
(3)	6 sets of 4-#6 s2407(E) at 5" cts.
(4)	47-#6 s2408(E) at abt. 8" cts.
(5)	33 sets of 1-#6 s2403(E) and 2-#6 s2406(E) at 6" cts.
(6)	17 sets of 2-#6 s2404(E) at 6" cts
(7)	18 sets of 2-#6 s2404(E) at 6" cts.
(8)	14-#7 hp2402(E) hoops at 3"
(9)	44-#7 hp2402(E) hoops at 3"
(10)	33-#7 hp2401(E) hoops at 4"
T1	20-#11 p2401(E) or p2402(E) at 7¾"
T2	14 bundles of 1-#11 p2405(E) (top) and 1-#11 p2406(E) (bot) at 12" max
B1	20-#11 p2403(E) at 7¾"
B2	14-#7 p2404(E) at 7¾"
B3	14 bundles of 1-#11 p2405(E) (bot) and 1-#11 p2406(E) (top) at 12" max
H1	10-#8 h2401(E) at 7½"
H2	18-#9 h2402(E) at 7"
H3	19-#6 h2403(E) at abt. 8⅛"
A1	8 sets of 1-#7 u2403(E) & 1-#7 u2404(E) at 10½"
A2	10-#7 u2405(E) at 10¾"
U1	11-#8 u2401(E) space with h2401(E) and p2401(E)
U2	20-#9 u2402(E) splice with h2402(E) and space with p2405(E)
C1	22 bundles of 2-#14 v2401(E) and 2-#14 v2402(E) alternate eq. spa.
C2	22 bundles of 2-#14 v2403(E) and 2-#14 v2404(E) alternate eq. spa.
C3	40-#11 v2405(E) eq. spa.
D1	#7 sp2401(E) at 6" pitch
D2	#7 sp2402(E) at 4" pitch
D3	#7 sp2403(E) at 3" pitch
K1	20-#5 s2409(E) spa. at 5"
K2	3-#5 h2404(E) space with n2401(E)
K3	1-#5 h2404(E) ea. face
K4	2-#5 h2405(E) ea. face
K5	3-#5 n2401(E) at 12" ea. face

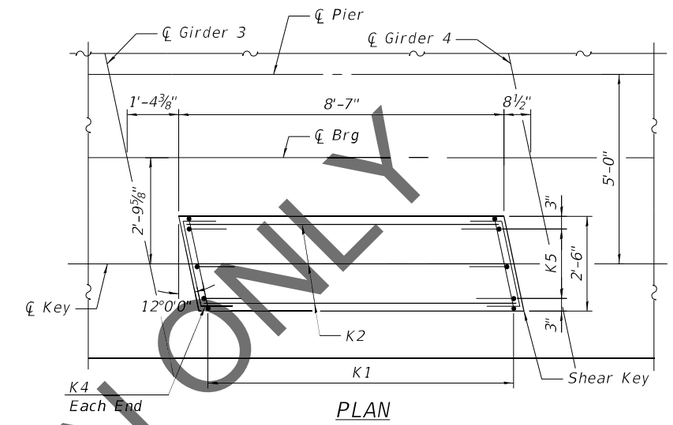

PLAN

Down station key shown.
Up station key mirrored about ℄ Pier and opposite hand.

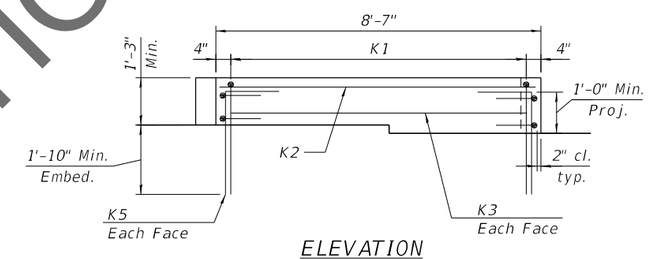

ELEVATION

SHEAR KEY DETAILS

Notes:
For Pier Plan and Elevation, see sheets 235, 236 and 237 of 292 .
For bar details, see sheet 239 of 292 .
For Bill of Material, see sheet 240 of 292 .

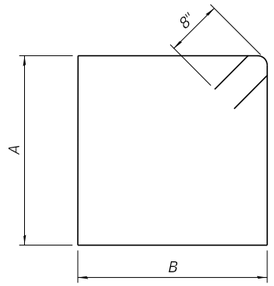

BARS s2401(E) & s2403(E)

Bars	A	B
s2401(E)	7'-8"	12'-8"
s2403(E)	11'-8"	9'-4"

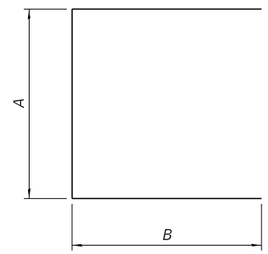

BARS s2402(E) & s2404(E) & s2407(E)

Bars	A	B
s2402(E)	7'-8"	8'-4"
s2404(E)	11'-8"	6'-8"
s2407(E)	6'-4"	5'-10"

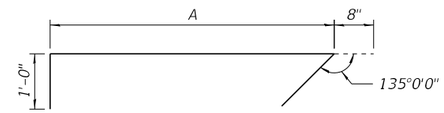

BARS s2405(E) & s2406(E)

Bars	A
s2405(E)	7'-8"
s2406(E)	11'-8"

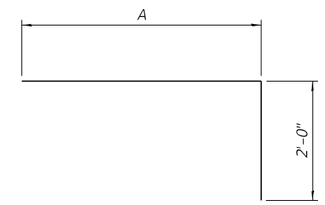

BARS p2401(E) & p2402(E)

Bars	A
p2401(E)	24'-0"
p2402(E)	49'-5"

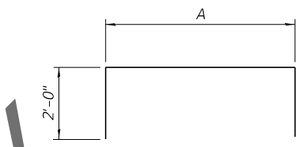

BARS p2405(E) & p2406(E)

Bars	A
p2405(E)	54'-2"
p2406(E)	53'-8"

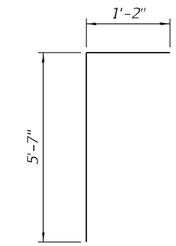

BARS u2403(E)

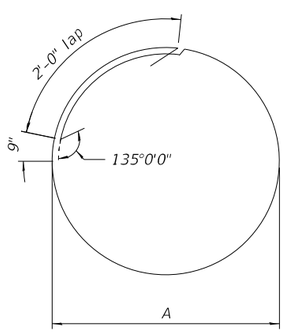

BARS hp2401(E) & hp2402(E)

Bars	A
hp2401(E)	8'-2"
hp2402(E)	6'-8"

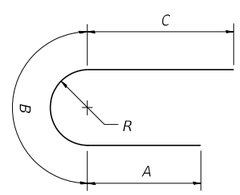

BARS u2401(E) & u2402(E)

Bars	A	B	C	R
u2401(E)	5'-4"	10'-8"	5'-4"	6'-3"
u2402(E)	5'-9"	14'-5"	7'-0"	4'-7"

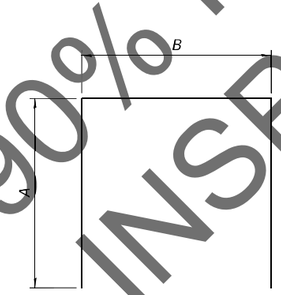

BARS u2405(E) & s2408(E)

Bars	A	B
u2405(E)	4'-7"	11'-6"
s2408(E)	2'-9"	12'-8"

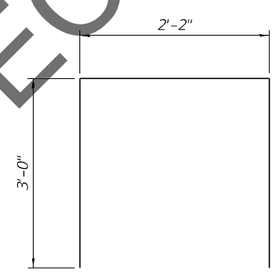

BARS s2409(E)

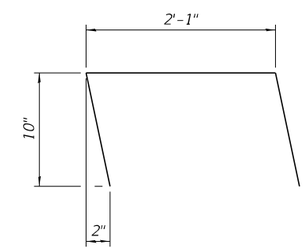

BARS h2405(E)

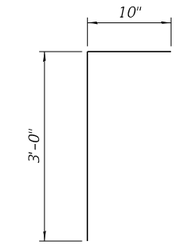

BARS n2401(E)

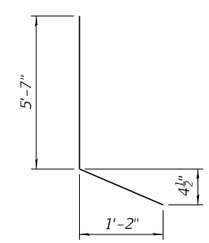

BARS u2404(E)

Pier 24

BILL OF MATERIAL

	Bar	No.	Size	Length	Shape
	h2401(E)	20	#8	51'-2"	
	h2402(E)	36	#9	38'-0"	
	h2403(E)	19	#6	31'-7"	
	h2404(E)	10	#5	8'-3"	
	h2405(E)	8	#5	3'-11"	
	hp2401(E)	99	#7	29'-2"	
	hp2402(E)	174	#7	24'-6"	
	n2401(E)	12	#5	3'-10"	
	p2401(E)	20	#11	26'-0"	
	p2402(E)	20	#11	51'-5"	
	p2403(E)	20	#11	57'-9"	
	p2404(E)	28	#7	2'-11"	
	p2405(E)	28	#11	58'-2"	
	p2406(E)	28	#11	57'-8"	
	s2401(E)	86	#6	42'-0"	
	s2402(E)	66	#6	24'-4"	
	s2403(E)	66	#6	43'-4"	
	s2404(E)	106	#6	25'-0"	
	s2405(E)	258	#6	9'-4"	
	s2406(E)	132	#6	13'-4"	
	s2407(E)	48	#6	18'-0"	
	s2408(E)	47	#6	18'-2"	
	s2409(E)	40	#5	8'-2"	
***	sp2401(E)	3	#7	12'-6"	
***	sp2402(E)	3	#7	81'-2"	
***	sp2403(E)	3	#7	13'-2"	
	u2401(E)	22	#8	30'-4"	
	u2402(E)	40	#9	27'-11"	
	u2403(E)	16	#7	6'-9"	
	u2404(E)	16	#7	6'-10"	
	u2405(E)	20	#7	20'-8"	
	v2401(E)	132	#14	51'-1"	
	v2402(E)	132	#14	53'-8"	
	v2403(E)	132	#14	47'-8"	
	v2404(E)	132	#14	57'-1"	
	v2405(E)	120	#11	31'-9"	

Structure Excavation	Cu. Yd.	32
Concrete Structures	Cu. Yd.	556.2
Reinforcement Bars, Epoxy Coated	Pound	369,130
Permanent Casing	Foot	246
Drilled Shaft in Soil	Cu. Yd.	566
Drilled Shaft in Rock	Cu. Yd.	86
Concrete Sealer	Sq. Ft.	5,620
Crosshole Sonic Logging Access Ducts	Foot	281
Crosshole Sonic Logging Testing	Each	3
Thermal Integrity Profile Data Collection	Foot	281
Thermal Integrity Profile Testing	Each	3

*** Length is height of spiral.

Notes:

For Pier Plan and Elevation, see sheets 235 thru 237 of 292.

For additional bar details, see sheets 238 and 239 of 292.

Pier 24 vertical load drilled shaft foundation design is based on end bearing in bedrock. For vertical load design, penetration into rock is required to achieve the factored resistance used in design (103,790kip). The limits shown for drilled shaft in rock is the minimum penetration required to achieve lateral fixity in rock for lateral load design.

The quantities and reinforcement detailing are based on the estimated top of competent rock and the estimated elevations shown and may change based on the actual elevations encountered at each shaft.

Wet construction methods within permament casing may be required. The Contractor's installation procedure shall clearly address cleaning and inspection methods proposed for use with wet construction methods which will ensure adequate end bearing on rock is achieved.

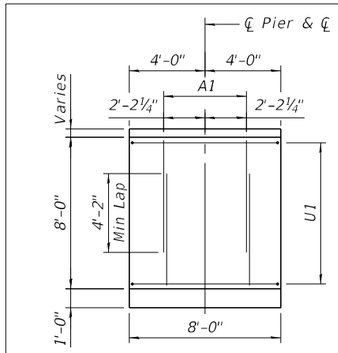

VIEW A-A

(T1 and (3) bars not shown for clarity)

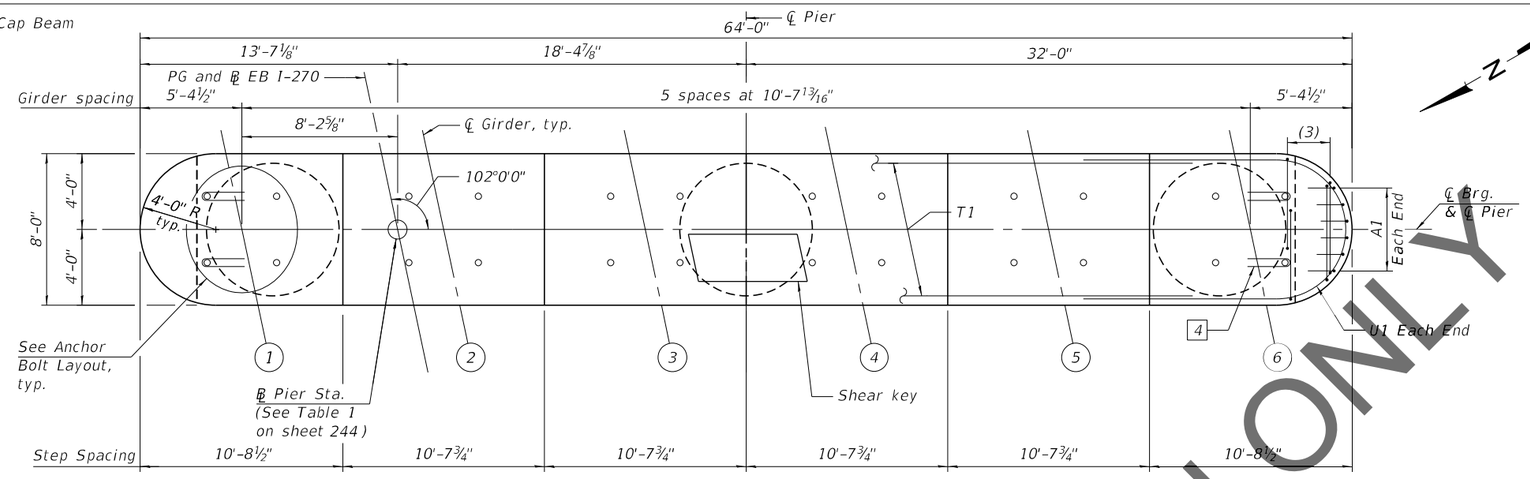

Notes:
Space reinforcement in cap to miss anchor bolts.
Pour steps monolithically with cap.

TOP PLAN

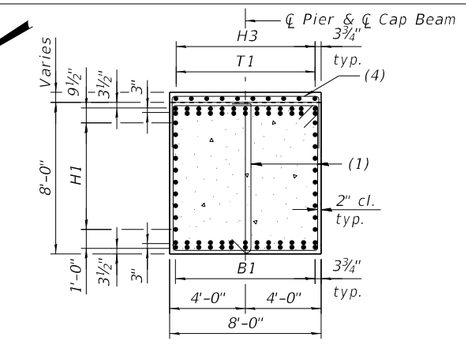

SECTION C-C

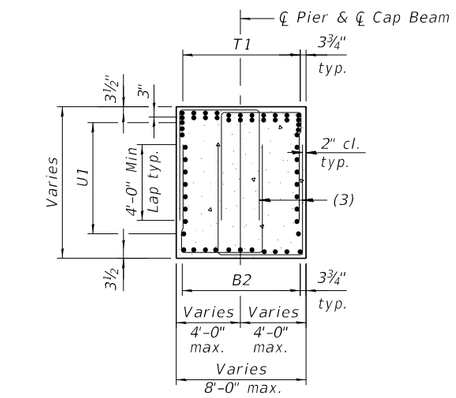

SECTION D-D

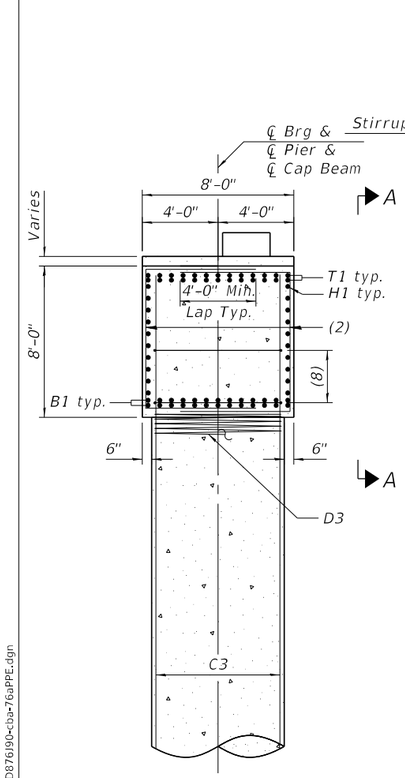

SECTION B-B

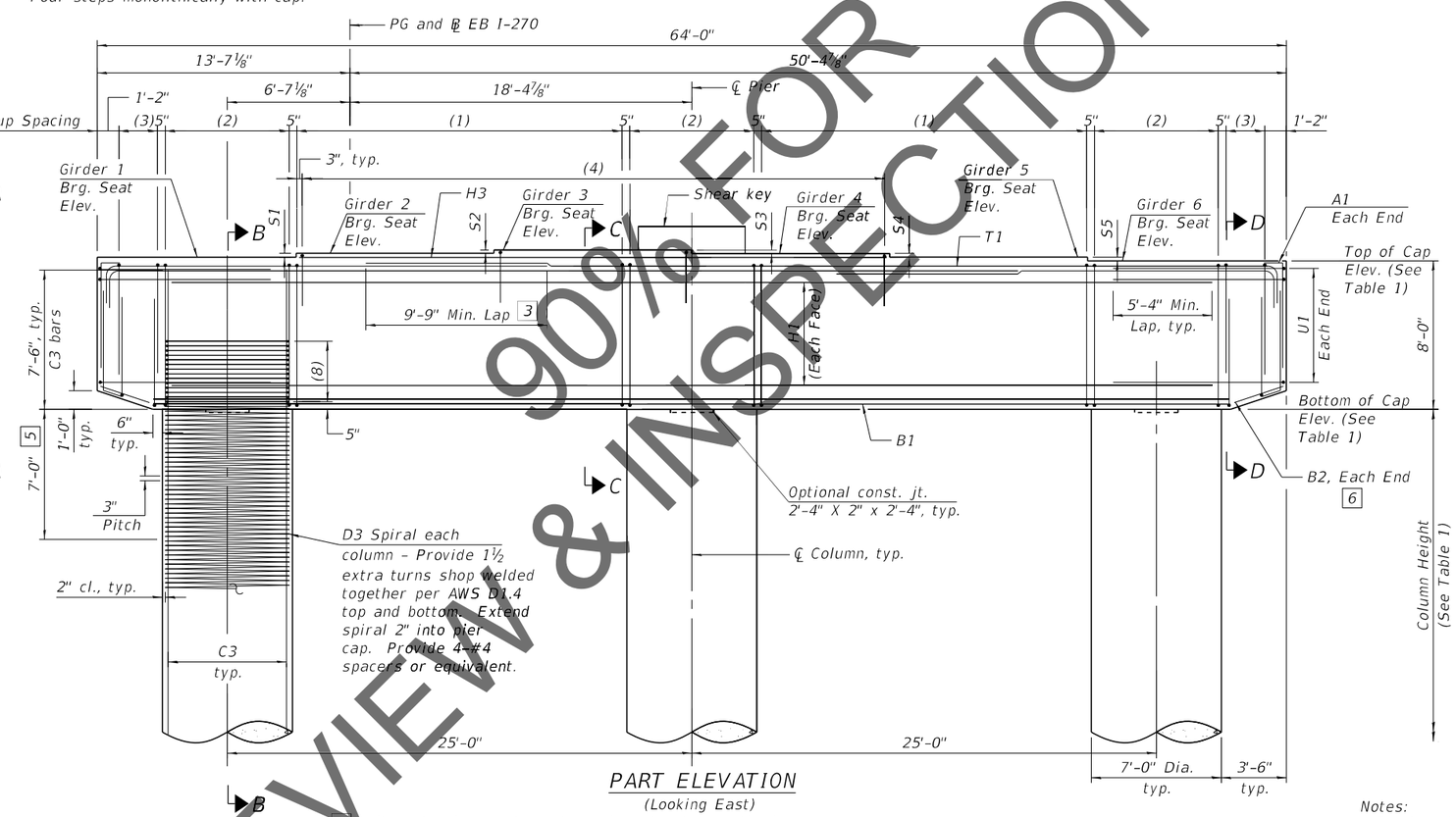

PART ELEVATION

(Looking East)

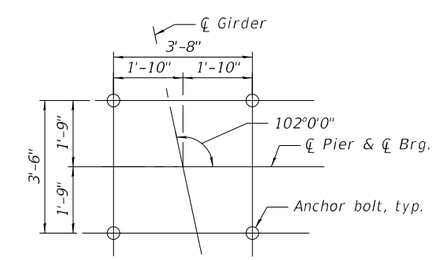

ANCHOR BOLTS LAYOUT

3 Alternate placement cap top rebars to stagger the laps

4 Provide 2 - R bar at each anchor shown. Place first R bar with top mat reinforcement and second R bar 6" below top U bar

5 No splicing of bars allowed in this region.

6 Field cut bars when needed to keep 2" clear concrete cover.

Notes:
For bar details and Bill of Materials see sheets 245 and 246 of 292 .
For column height, step height and all Elevations, See Table 1 on sheet 244 of 292 .
For bearing details, see sheet 160 of 292 .
For bar callouts and shear key details, see sheet 244 of 292 .

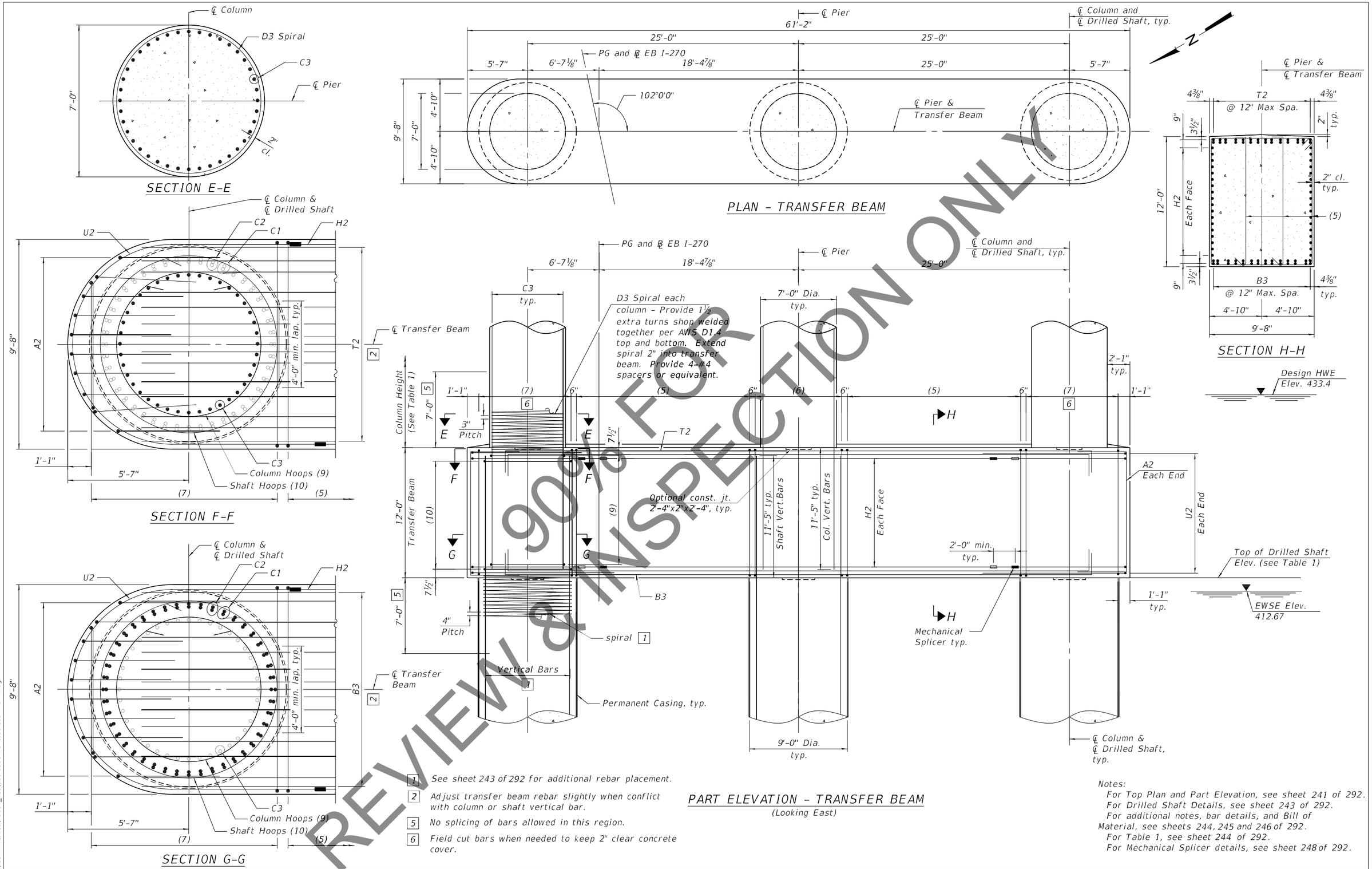

1 See sheet 243 of 292 for additional rebar placement.

2 Adjust transfer beam rebar slightly when conflict with column or shaft vertical bar.

5 No splicing of bars allowed in this region.

6 Field cut bars when needed to keep 2" clear concrete cover.

PART ELEVATION - TRANSFER BEAM

(Looking East)

Notes:

For Top Plan and Part Elevation, see sheet 241 of 292.
For Drilled Shaft Details, see sheet 243 of 292.
For additional notes, bar details, and Bill of Material, see sheets 244, 245 and 246 of 292.
For Table 1, see sheet 244 of 292.
For Mechanical Splicer details, see sheet 248 of 292.

MODEL: Default
FILE NAME: C:\ICS4PDF\92091\45087_265\060-0350-D876190-cba-77aPPE.dgn

HORNER & SHIFRIN
Teaming with: PARSONS

USER NAME =	DESIGNED - GX	REVISED -	
	CHECKED - TMB	REVISED -	
PLOT SCALE =	DRAWN - JG	REVISED -	
PLOT DATE =	CHECKED - TMB	REVISED -	

STATE OF ILLINOIS
DEPARTMENT OF TRANSPORTATION

PIER 25 PLAN AND ELEVATION - 2
STRUCTURE NO. 060-0350 (EB)

SHEET 242 OF 292 SHEETS

F.A.I. RTE.	SECTION	COUNTY	TOTAL SHEETS	SHEET NO.
270	60B-1	MADISON	860	442
		CONTRACT NO. 76J90		
		ILLINOIS FED. AID PROJECT		

9/11/2021 5:26:25 PM

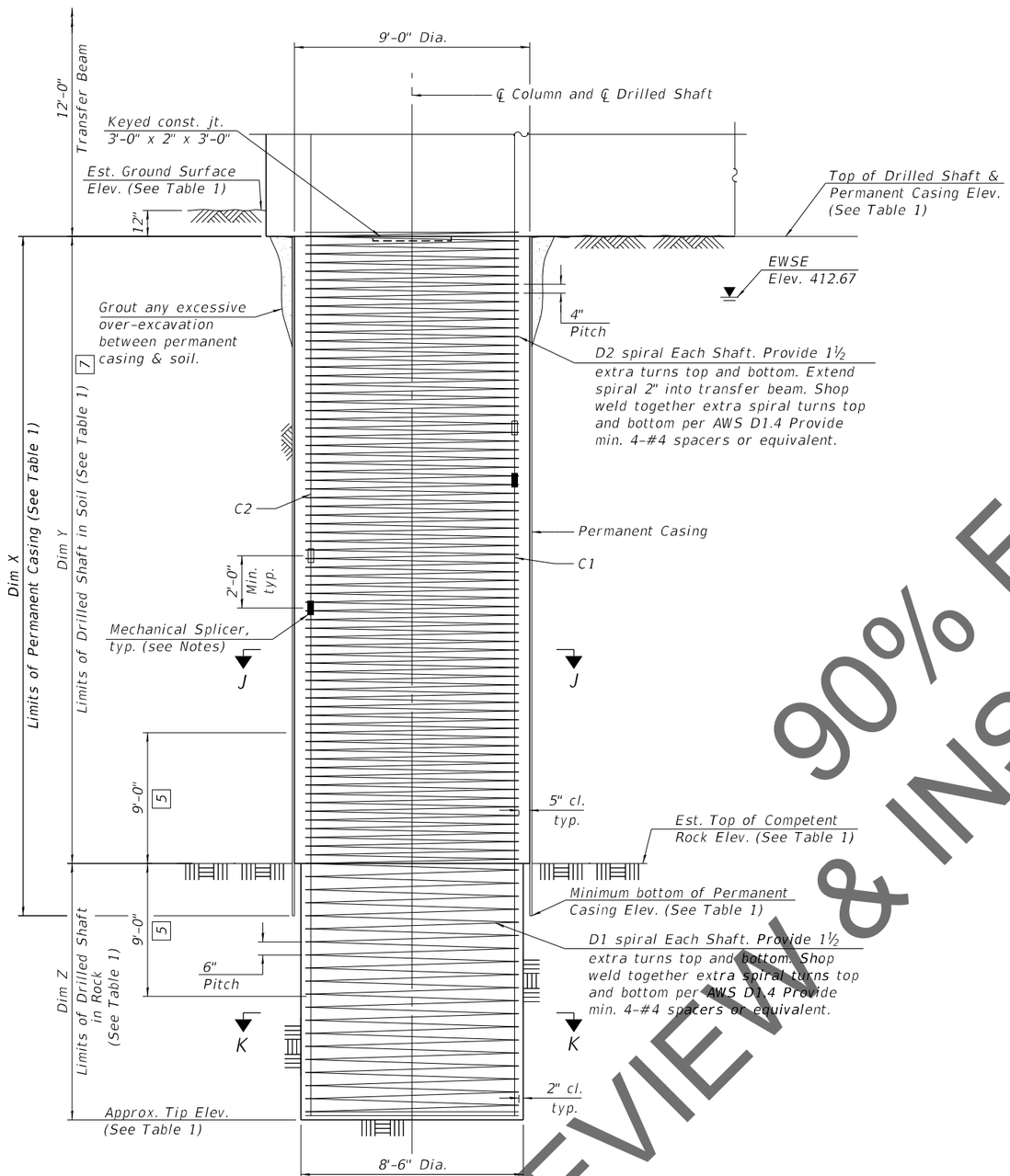

DRILLED SHAFT DETAIL

(One shaft shown, three shafts required, one under each column)

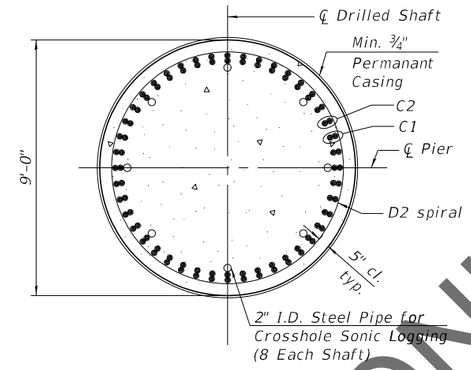

SECTION J-J

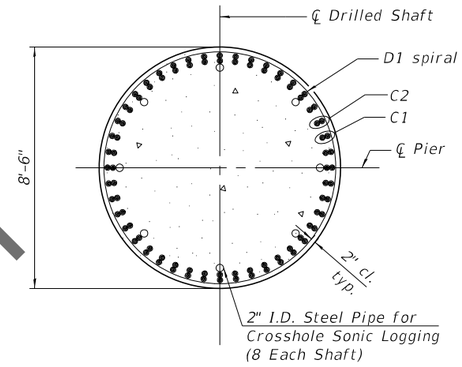

SECTION K-K

5 No splicing of bars allowed in this region.

7 If the prevailing water surface elevation during construction is consistently different than estimated on the plans, the contractor may propose an adjustment to the top of the drilled shaft elevation as part of their installation procedure. The top of all drilled shafts within a substructure unit shall be constructed to the same elevation and extend above the prevailing water surface. The quantities and reinforcement detailing are based on the top of shaft and the estimated elevations shown and may change based on the actual elevations encountered at each shaft and the final top of shaft elevation.

Notes:

For Pier Plan and Elevation, see Sheets 241 and 242 of 292.

For additional notes, bar details, and Bill of Materials, see sheets 245 and 246 of 292.

For Table 1, see sheet 244 of 292.

For Mechanical Splicer Details, see sheet 248 of 292.

The Contractor may propose a construction joint in the drilled shaft so separate pours can be made, if the shaft can be poured in the dry, subject to approval from the Engineer.

The Permanent Casing is shown embedded 2 ft. into rock for estimate of quantities. The Contractor is responsible for determining the casing thickness and the actual tip elevation to be used. See Article 516.06(d) of the Standard Specifications. Pay Limits for the Permanent Casing shall be based on the minimum length shown.

When splicing of spiral reinforcement is necessary, the spirals shall be provided with 1 ½ extra turns at the ends to be spliced. These additional turns shall either be welded together according to AWS D1.4, or shall both terminate with a 135° standard hook.

Alternate location of mechanical splices of C1 bars every other bar. Alternate location of mechanical splices of C2 bars within each bundle.

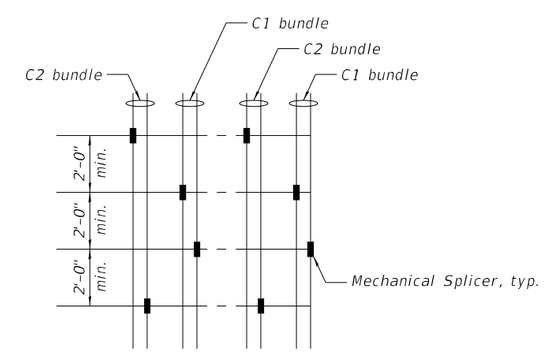

ALTERNATE MECHANICAL SPLICERS LOCATION

TABLE 1

		Pier 25
℄ Pier Station		1832+56.56
Bearing Seat Elevation	Girder 1	445.24
	Girder 2	445.46
	Girder 3	445.64
	Girder 4	445.45
	Girder 5	445.25
	Girder 6	445.05
Top of Cap Elevation		445.05
Bottom of Cap Elevation		437.05
Column Height		13'-9"
Top of Shaft Elevation		411.30
Approx. Tip Elevation		318.80
Est. Ground Surface Elevation		412.30
Est. Top of Rock Elevation		332.30
Min. bottom of Permanent Casing Elevation		330.30
Dim X		81'-0"
Dim Y		79'-0"
Dim Z		13'-6"
S1		2 5/8"
S2		2 1/8"
S3		2 1/4"
S4		2 3/8"
S5		2 3/8"

Pier 25

Mark	Bar Callouts
(1)	43 sets of 1-#6 s2501(E) and 1-#6 s2505(E) at 5" cts.
(2)	11 sets of 2-#6 s2502(E) at 8" cts.
(3)	6 sets of 4-#6 s2507(E) at 5" cts.
(4)	47-#6 s2508(E) at abt. 8" cts.
(5)	33 sets of 1-#6 s2503(E) and 2-#6 s2506(E) at 6" cts.
(6)	17 sets of 2-#6 s2504(E) at 6" cts
(7)	18 sets of 2-#6 s2504(E) at 6" cts.
(8)	14-#7 hp2502(E) hoops at 3"
(9)	44-#7 hp2502(E) hoops at 3"
(10)	33-#7 hp2501(E) hoops at 4"
T1	2 layers of 13-#11 p2501(E) or p2502(E) at 7 3/8"
T2	14 bundles of 1-#11 p2505(E) (top) and 1-#11 p2506(E) (bot) at 12" max
B1	2 layers of 13-#11 p2503(E) at 7 3/8"
B2	11-#7 p2504(E) at 7 3/8"
B3	14 bundles of 1-#11 p2505(E) (bot) and 1-#11 p2506(E) (top) at 12" max
H1	10-#8 h2501(E) at 7 1/2"
H2	18-#9 h2502(E) at 7"
H3	10-#6 h2503(E) at abt. 9 3/4"
A1	6 sets of 1-#7 u2503(E) & 1-#7 u2504(E) at 10 1/2"
A2	10-#7 u2505(E) at 10 3/4"
U1	11-#8 u2501(E) space with h2501(E) and p2501(E)
U2	20-#9 u2502(E) splice with h2502(E) and space with p2505(E)
C1	22 bundles of 2-#14 v2501(E) and 2-#14 v2502(E) alternate eq. spa.
C2	22 bundles of 2-#14 v2503(E) and 2-#14 v2504(E) alternate eq. spa.
C3	40-#11 v2505(E) eq. spa.
D1	#7 sp2501(E) at 6" pitch
D2	#7 sp2502(E) at 4" pitch
D3	#7 sp2503(E) at 3" pitch
K1	13-#5 s2509(E) spa. at 5"
K2	3-#5 h2504(E) space with n2501(E)
K3	1-#5 h2504(E) ea. face
K4	2-#5 h2505(E) ea. face
K5	3-#5 n2501(E) at 12" ea. face
R	#5 s2510(E)

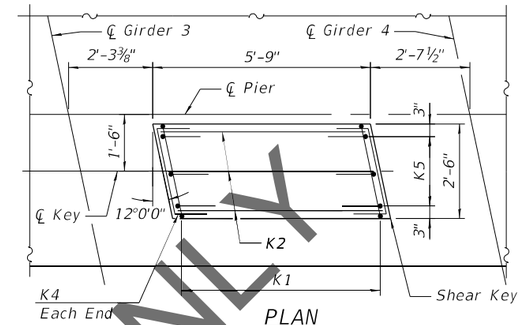

PLAN

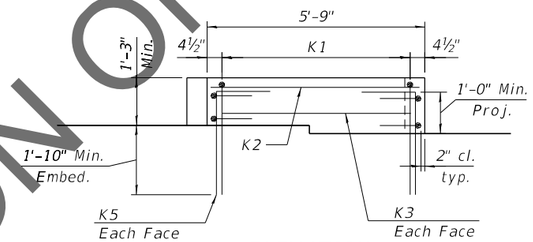

ELEVATION

SHEAR KEY DETAILS

Notes:
For Pier Plan and Elevation, see sheets 241, 242 and 243 of 292.
For bar details, see sheet 245 of 292.
For Bill of Material, see sheet 246 of 292.

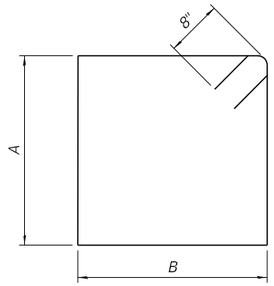

BARS s2501(E) & s2503(E)

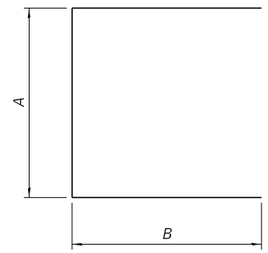

BARS s2502(E) & s2504(E) & s2507(E)

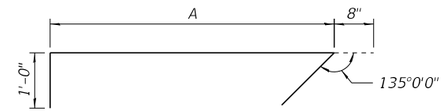

BARS s2505(E) & s2506(E)

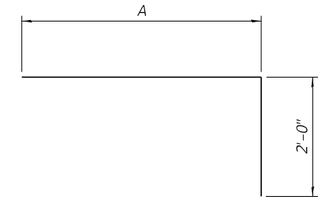

BARS p2501(E) & p2502(E)

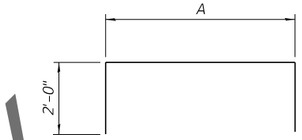

BARS p2505(E) & p2506(E)

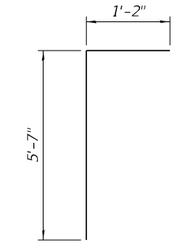

BARS u2503(E)

Bars	A	B
s2501(E)	7'-8"	7'-8"
s2503(E)	11'-8"	9'-4"

Bars	A	B
s2502(E)	7'-8"	5'-10"
s2504(E)	11'-8"	6'-8"
s2507(E)	4'-10"	5'-10"

Bars	A
s2505(E)	7'-8"
s2506(E)	11'-8"

Bars	A
p2501(E)	24'-0"
p2502(E)	49'-5"

Bars	A
p2505(E)	54'-2"
p2506(E)	53'-8"

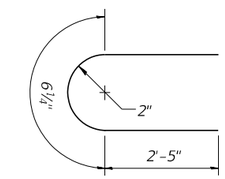

BARS s2510(E)

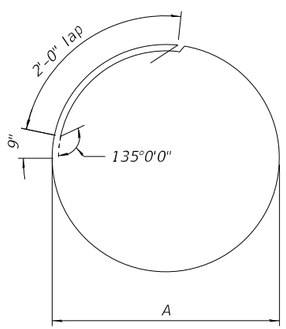

BARS hp2501(E) & hp2502(E)

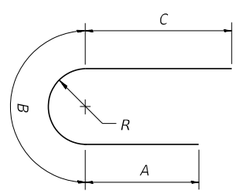

BARS u2501(E) & u2502(E)

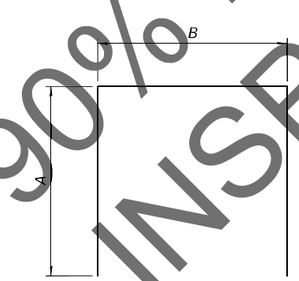

BARS u2505(E) & s2508(E)

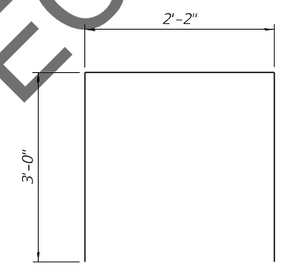

BARS s2509(E)

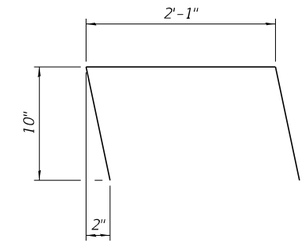

BARS h2505(E)

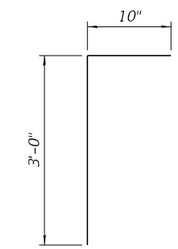

BARS n2501(E)

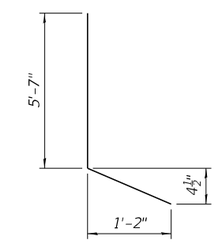

BARS u2504(E)

Bars	A
hp2501(E)	8'-2"
hp2502(E)	6'-8"

Bars	A	B	C	R
u2501(E)	5'-4"	11'-9"	5'-4"	3'-9"
u2502(E)	5'-9"	14'-5"	7'-9"	4'-7"

Bars	A	B
u2505(E)	4'-7"	11'-6"
s2508(E)	2'-9"	7'-8"

Pier 25

BILL OF MATERIAL

	Bar	No.	Size	Length	Shape
	h2501(E)	20	#8	56'-2"	
	h2502(E)	36	#9	38'-0"	
	h2503(E)	10	#6	31'-7"	
	h2504(E)	5	#5	5'-5"	
	h2505(E)	4	#5	3'-11"	
	hp2501(E)	99	#7	29'-2"	
	hp2502(E)	174	#7	24'-6"	
	n2501(E)	6	#5	3'-10"	
	p2501(E)	26	#11	26'-0"	
	p2502(E)	26	#11	51'-5"	
	p2503(E)	26	#11	57'-9"	
	p2504(E)	22	#7	2'-11"	
	p2505(E)	28	#11	58'-2"	
	p2506(E)	28	#11	57'-8"	
	s2501(E)	86	#6	32'-0"	
	s2502(E)	66	#6	19'-4"	
	s2503(E)	66	#6	43'-4"	
	s2504(E)	106	#6	25'-0"	
	s2505(E)	86	#6	9'-4"	
	s2506(E)	132	#6	13'-4"	
	s2507(E)	48	#6	16'-6"	
	s2508(E)	47	#6	13'-2"	
	s2509(E)	13	#5	8'-2"	
	s2510(E)	8	#5	5'-5"	
***	sp2501(E)	3	#7	12'-6"	
***	sp2502(E)	3	#7	80'-2"	
***	sp2503(E)	3	#7	14'-1"	
	u2501(E)	22	#8	22'-5"	
	u2502(E)	40	#9	27'-11"	
	u2503(E)	12	#7	6'-9"	
	u2504(E)	12	#7	6'-10"	
	u2505(E)	20	#7	20'-8"	
	v2501(E)	132	#14	50'-7"	
	v2502(E)	132	#14	53'-2"	
	v2503(E)	132	#14	48'-1"	
	v2504(E)	132	#14	55'-8"	
	v2505(E)	120	#11	32'-8"	
	Structure Excavation			Cu. Yd.	32
	Concrete Structures			Cu. Yd.	467.6
	Reinforcement Bars, Epoxy Coated			Pound	366,290
	Permanent Casing			Foot	243
	Drilled Shaft in Soil			Cu. Yd.	559
	Drilled Shaft in Rock			Cu. Yd.	86
	Crosshole Sonic Logging Access Ducts			Foot	278
	Crosshole Sonic Logging Testing			Each	3
	Thermal Integrity Profile Data Collection			Foot	278
	Thermal Integrity Profile Testing			Each	3

*** Length is height of spiral.

Notes:

For Pier Plan and Elevation, see sheets 241 thru 243 of 292.

For additional bar details, see sheets 244 and 245 of 292.

Pier 25 vertical load drilled shaft foundation design is based on end bearing in bedrock. For vertical load design, penetration into rock is required to achieve the factored resistance used in design (16,180 kip). The limits shown for drilled shaft in rock is the minimum penetration required to achieve lateral fixity in rock for lateral load design.

The quantities and reinforcement detailing are based on the estimated top of competent rock and the estimated elevations shown and may change based on the actual elevations encountered at each shaft.

Wet construction methods within permament casing may be required. The Contractor's installation procedure shall clearly address cleaning and inspection methods proposed for use with wet construction methods which will ensure adequate end bearing on rock is achieved.

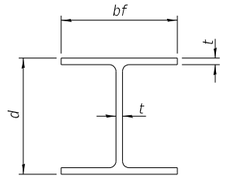

STEEL PILE TABLE

Designation	Depth d	Flange width bf	Web and Flange thickness t	Encasement diameter A
HP 14x117	14¼"	14⅞"	13/16"	30"
x102	14"	14¾"	11/16"	30"
x89	13⅞"	14¾"	⅝"	30"
x73	13⅝"	14⅝"	½"	30"
HP 12x84	12¼"	12¼"	11/16"	24"
x74	12⅛"	12¼"	⅝"	24"
x63	12"	12⅛"	½"	24"
x53	11¾"	12"	7/16"	24"
HP 10x57	10"	10¼"	9/16"	24"
x42	9¾"	10⅛"	7/16"	24"
HP 8x36	8"	8⅛"	7/16"	18"

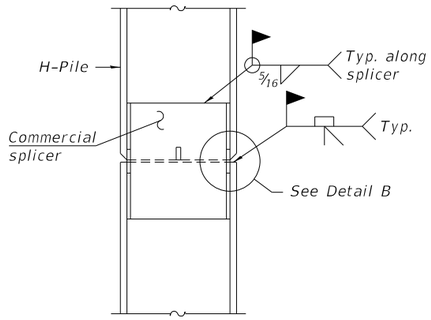

ELEVATION

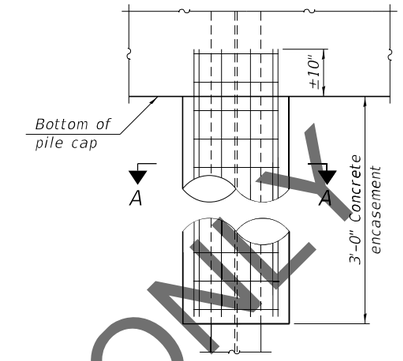

ELEVATION

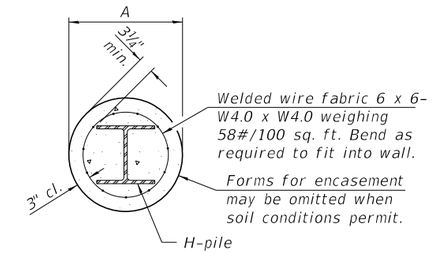

SECTION A-A

INDIVIDUAL PILE CONCRETE ENCASEMENT
(when specified)

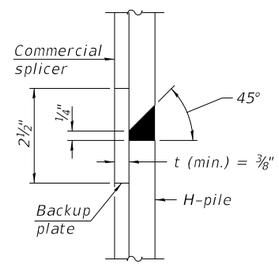

DETAIL "B"

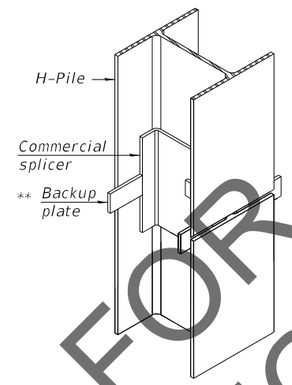

ISOMETRIC VIEW

WELDED COMMERCIAL SPLICE

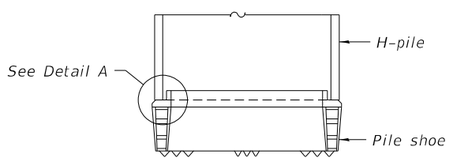

ELEVATION

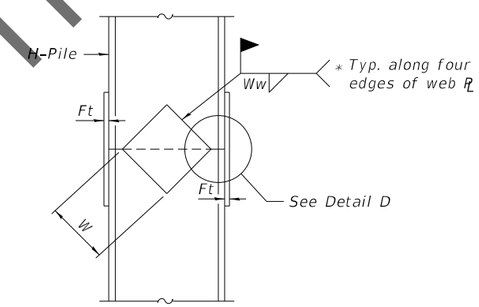

ELEVATION

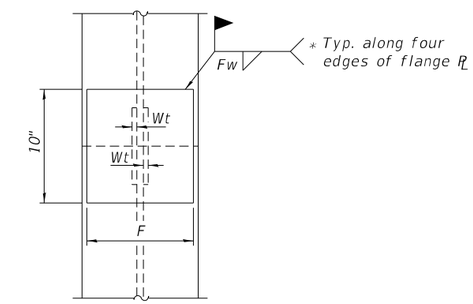

END VIEW

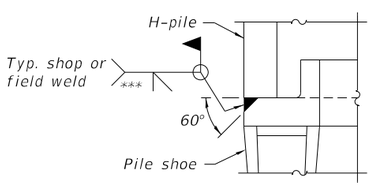

DETAIL A

SHOE ATTACHMENT

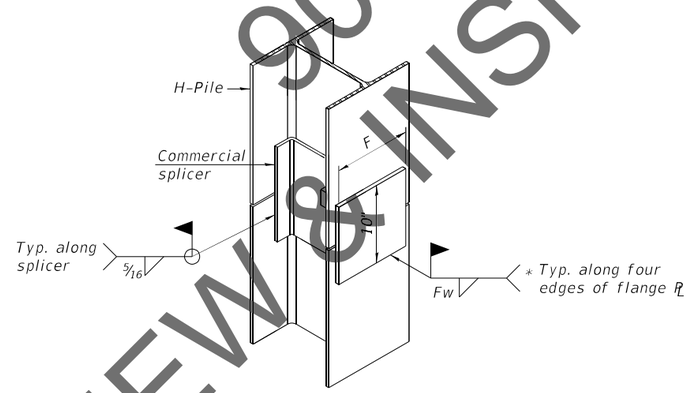

ISOMETRIC VIEW

WELDED COMMERCIAL SPLICE ALTERNATE

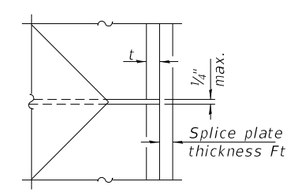

DETAIL D

Designation	F	Ft	Fw	W	Wt	Ww
HP 14x117	12½"	1"	⅞"	7¾"	⅝"	½"
x102	12½"	⅞"	¾"	7¾"	⅝"	½"
x89	12½"	¾"	11/16"	7¾"	⅝"	½"
x73	12½"	⅝"	9/16"	7¾"	⅝"	½"
HP 12x84	10"	⅞"	11/16"	6½"	⅝"	½"
x74	10"	⅞"	11/16"	6½"	⅝"	½"
x63	10"	⅝"	½"	6½"	½"	⅜"
x53	10"	⅝"	½"	6½"	½"	⅜"
HP 10x57	8"	¾"	9/16"	5¼"	½"	⅜"
x42	8"	⅝"	9/16"	5¼"	½"	⅜"
HP 8x36	7"	⅝"	7/16"	4¼"	½"	⅜"

WELDED PLATE FIELD SPLICE

Note:
The steel H-piles shall be according to AASHTO M270 Grade 50.

* Interrupt welds ¼" from end of web and/or each flange.

** Remove portions of backup plates that extend outside the flanges.

*** Weld size per pile shoe manufacturer (5/16" min.).

F-HP 1-1-2020

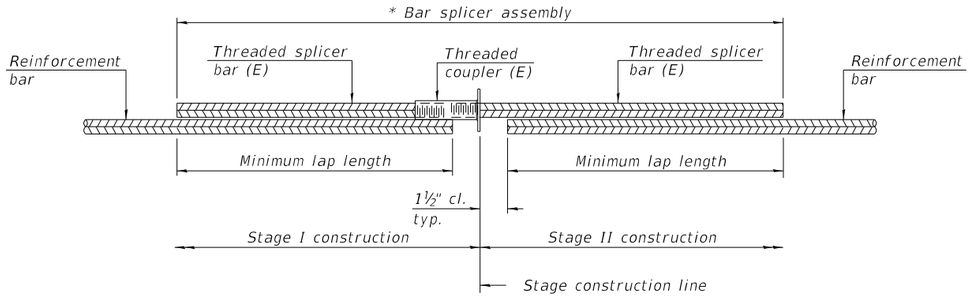

STANDARD BAR SPLICER ASSEMBLY PLAN

(All components shall be provided from one supplier)

Threaded splicer bar length = min. lap length + 1½" + thread length

* Epoxy not required on Bar Splicer Assembly components used in conjunction with black bars.

Location	Bar size	No. assemblies required	Minimum lap length

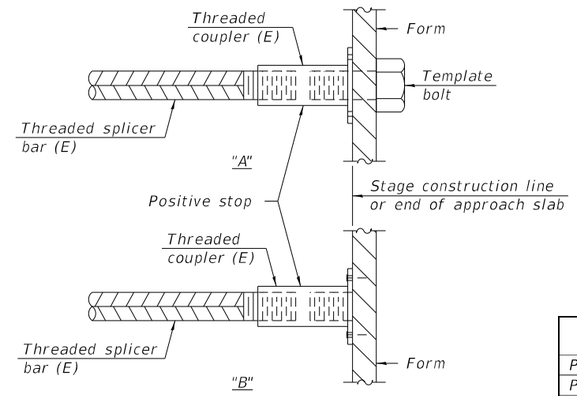

INSTALLATION AND SETTING METHODS

"A" : Set bar splicer assembly by means of a template bolt.
"B" : Set bar splicer assembly by nailing to wood forms or cementing to steel forms.
(E) : Indicates epoxy coating.

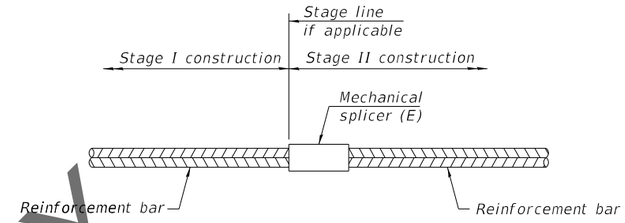

STANDARD MECHANICAL SPLICER

Location	Bar size	No. assemblies required
Pier 1	#9	72
Pier 1	#11	56
Pier 1	#14	198
Pier 2	#9	72
Pier 2	#11	56
Pier 2	#14	198
Pier 3	#9	72
Pier 3	#11	56
Pier 3	#14	198
Pier 4	#9	72
Pier 4	#11	56
Pier 4	#14	198
Pier 5	#9	72
Pier 5	#11	56
Pier 5	#14	198
Pier 6	#9	72
Pier 6	#14	198
Pier 7	#9	72
Pier 7	#14	198
Pier 8	#9	72
Pier 8	#14	198
Pier 9	#9	72
Pier 9	#14	198
Pier 10	#9	72
Pier 10	#14	198
Pier 11	#9	72
Pier 11	#14	198

Location	Bar size	No. assemblies required
Pier 12	#9	72
Pier 12	#14	198
Pier 13	#9	72
Pier 13	#14	198
Pier 14	#9	72
Pier 14	#14	198
Pier 15	#9	72
Pier 15	#14	198
Pier 16	#9	72
Pier 16	#14	198
Pier 17	#9	72
Pier 17	#14	198
Pier 18	#9	72
Pier 18	#14	264
Pier 19	#9	72
Pier 19	#14	264
Pier 20	#9	72
Pier 20	#14	264
Pier 21	#9	72
Pier 21	#14	264
Pier 22	#9	72
Pier 22	#14	264
Pier 23	#9	72
Pier 23	#14	264
Pier 24	#9	72
Pier 24	#14	264
Pier 25	#9	72
Pier 25	#14	264

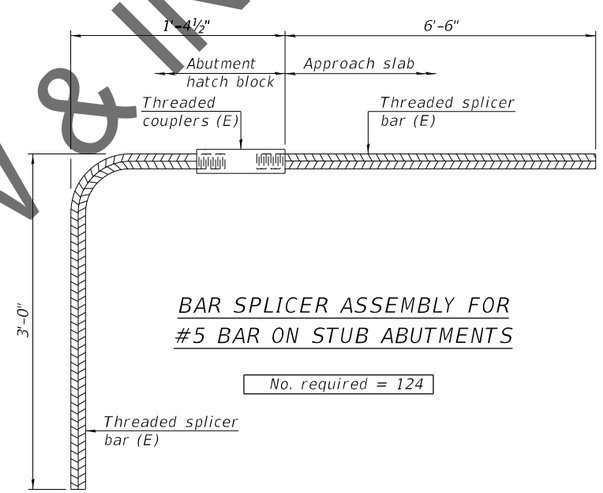

BAR SPLICER ASSEMBLY FOR #5 BAR ON STUB ABUTMENTS

No. required = 124

Notes:
Splicer bars shall be deformed with threaded ends and have a minimum 60 ksi yield strength.
All reinforcement shall be lapped and tied to the splicer bars.
Bar splicer assemblies shall be epoxy coated according to the requirements for reinforcement bars. See Section 508 of the Standard Specifications.
See approved list of bar splicer assemblies and mechanical splicers for alternatives.

Illinois Department of Transportation
Division of Highways
sci engineering inc

SOIL BORING LOG

Page 1 of 1

Date 09/20/18

ROUTE FAI 270 DESCRIPTION I-270 over the Mississippi River LOGGED BY SCI

SECTION 60B-1 LOCATION West Abutment, SEC., TWP. Land Grant 00114, RNG.
Lat 38.76606961 Long -90.18069305

COUNTY St. Louis DRILLING METHOD HSA HAMMER TYPE Automatic

STRUCT. NO. 060-0350 (EB)
Station 806+89.23

BORING NO. BB-02
Station 1778+38.55
Offset 84.7 ft R (EB)
Ground Surface Elev. 420.6 ft

Surface Water Elev. ft
Stream Bed Elev. ft

Groundwater Elev.:
First Encounter 409.6 ft ▼
Upon Completion ft
After Hrs. ft

Description	Elev.	DEPTH (ft)	BLOWS (/6")	UCS Qu (tsf)	MOIST (%)
Sandy Clay Loam: Brown and gray, loose, trace fine gravel, trace organics, moist, fill, A-6.	417.6		1 3 4	1.7 S/15	19
Sandy Clay Loam: Gray, loose, trace fine gravel, trace organics, very moist, A-6.	415.1	-5	1 2 3	0.3 P	19
Silty Clay Loam: Gray, medium stiff, moist, A-6.	412.6		2 3 4	1.2 B/20	24
Silty Loam: Gray and brown, soft, moist, A-4.	410.1	-10	2 2 1	0.2 B/20	34
Silty Clay Loam: Gray, very soft to soft, moist to wet, A-6.			1 2 1	0.3 P	36
No recovery.		-15	0 0 0	NC	--
			1 1 2	0.3 P	31
Silty Loam: Gray, medium stiff, very moist, A-4.	402.6	-20	2 2 3	0.3 P	33
Silty Clay Loam: Gray, soft, very moist, A-6.	400.6		1 1 2	0.1 B/20	34
Silty Loam: Gray, very soft to medium stiff, very moist, A-4.	397.6	-25	1 2 3	0.3 P	--
Silty Clay Loam: Gray, very soft, very moist, A-6.	393.6		0 0 0	0.3 B/20	57
Clay: Gray, very soft, very moist, A-7.	392.6	-30	0 0 0	0.4 B/20	65
Weathered Limestone: Gray	389.6				
Boring terminated at 32.0 feet. Boring grouted to 32 feet.	388.6	-35	100/0"	NC	--
		-40	100/0"	NC	--

The Unconfined Compressive Strength (UCS) Failure Mode is indicated by (B-Bulge, S-Shear, P-Penetrometer)
AASHTO Classifications are based on visual classifications unless otherwise noted BBS, form 137 (Rev. 8-99)

Illinois Department of Transportation
Division of Highways
sci engineering inc

SOIL BORING LOG

Page 1 of 2

Date 03/30/21

ROUTE FAI 270 DESCRIPTION I-270 over the Mississippi River LOGGED BY SCI

SECTION 60B-1 LOCATION Pier 3 SEC. TWP. Land Grant 00114, RNG.
Lat 38.7657626 Long -90.01789774

COUNTY Madison DRILLING METHOD HSA, NQ Casing HAMMER TYPE Automatic

STRUCT. NO. 060-0350 (EB)
Station 806+89.23

BORING NO. BB-08
Station 1783+46.58
Offset 69.4 ft R (EB)
Ground Surface Elev. 410.4 ft

Surface Water Elev. 402.9 ft
Stream Bed Elev. ft

Groundwater Elev.:
First Encounter ft
Upon Completion ft
After Hrs. ft

Description	Elev.	DEPTH (ft)	BLOWS (/6")	UCS Qu (tsf)	MOIST (%)
River surface elevation at 410.4 (+/-) feet. Surface elevation at river bottom = 397.7 (+/-) feet. Sampling began 12.1 feet below water level.		-5, -10			
Silty Loam: Dark gray, wet, very soft, A-4.	398.3				
Clay: Dark gray, very moist, soft, A-7.	397.7	-15	3 1 1	<0.25 P	--
Wood	392.8		1 2 50/3"	NC	--
Weathered Limestone	391.5				
Borehole continued with rock coring.	391.3	-20			

The Unconfined Compressive Strength (UCS) Failure Mode is indicated by (B-Bulge, S-Shear, P-Penetrometer)
AASHTO Classifications are based on visual classifications unless otherwise noted BBS, form 137 (Rev. 8-99)

Illinois Department of Transportation
Division of Highways
sci engineering inc

ROCK CORE LOG

Page 1 of 2

Date 03/30/21

ROUTE FAI 270 DESCRIPTION I-270 over the Mississippi River LOGGED BY SCI

SECTION 60B-1 LOCATION Pier 3 SEC. TWP. Land Grant 00114, RNG.
Lat 38.7657626 Long -90.01789774

COUNTY Madison CORING METHOD Conventional

STRUCT. NO. 060-0350 (EB)
Station 806+89.23

CORING BARREL TYPE & SIZE Solid Barrel NX
Core Diameter 2.06 in
Top of Rock Elev. 391.5 ft
Begin Core Elev. 391.3 ft

BORING NO. BB-08
Station 1783+46.58
Offset 69.4 ft R (EB)
Ground Surface Elev. 410.4 ft

Description	Elev.	DEPTH (ft)	CORE (#)	RECOVERY (%)	R.Q.D. (%)	CORE TIME (min/ft)	STRENGTH (tsf)	MOISTURE (%)
Limestone: Light gray to white, hard to very hard, very finely crystalline, medium to thick bedding, fractured, slightly weathered, dense. *Depth 20.1', Dry Density: 160.2 pcf.*	391.3	-20	1	94	79	2.9	745.9	0.1
Depth 25.7', Dry Density: 165.4 pcf.		-25					783.4	0.1
		-30	2	96	80	2.1		
Calcareous Sandstone: Gray to greenish gray, hard to very hard, very finely to finely crystalline, medium to thick bedded, slightly weathered, dense. *Depth 33.4', Dry Density: 151.6 pcf.*	377.0	-35					577.3	0.2
Limestone: Light gray to white, hard to very hard, finely crystalline, medium to thick bedding, fractured, slightly weathered, dense. *Depth 38.1', Dry Density: 162.2 pcf.*	373.8						579.8	0.1

Color pictures of the cores Yes
Cores will be stored for examination until completion
The "Strength" column represents the uniaxial compressive strength of the core sample (ASTM D-2938)
BBS, form 138 (Rev. 8-99)

Illinois Department of Transportation
Division of Highways
sci engineering inc

ROCK CORE LOG

Page 2 of 2

Date 03/30/21

ROUTE FAI 270 DESCRIPTION I-270 over the Mississippi River LOGGED BY SCI

SECTION 60B-1 LOCATION Pier 3 SEC. TWP. Land Grant 00114, RNG.
Lat 38.7657626 Long -90.01789774

COUNTY Madison CORING METHOD Conventional

STRUCT. NO. 060-0350 (EB)
Station 806+89.23

CORING BARREL TYPE & SIZE Solid Barrel NX
Core Diameter 2.06 in
Top of Rock Elev. 391.5 ft
Begin Core Elev. 391.3 ft

BORING NO. BB-08
Station 1783+46.58
Offset 69.4 ft R (EB)
Ground Surface Elev. 410.4 ft

Description	Elev.	DEPTH (ft)	CORE (#)	RECOVERY (%)	R.Q.D. (%)	CORE TIME (min/ft)	STRENGTH (tsf)	MOISTURE (%)
Limestone: Light gray to white, hard to very hard, finely crystalline, medium to thick bedding, fractured, slightly weathered, dense. *(continued)* Medium to massive bedding (banded from 41.5 to 42.2 feet). *Depth 40.5', Dry Density: 165.4 pcf.*		-40	3	95	81	2.7		
		-45					690.3	0.1
Depth 45.9', Dry Density: 163.9 pcf.							792.1	0.1
Boring terminated at 49.07 feet.	361.3	-50, -55						

Color pictures of the cores Yes
Cores will be stored for examination until completion
The "Strength" column represents the uniaxial compressive strength of the core sample (ASTM D-2938)
BBS, form 138 (Rev. 8-99)

Illinois Department of Transportation
Division of Highways
sci engineering inc

SOIL BORING LOG

Page 1 of 2

Date 04/11/21

ROUTE FAI 270 DESCRIPTION I-270 over the Mississippi LOGGED BY SCI

SECTION 60B-1 LOCATION Pier 4, SEC., TWP. Land Grant 00114, RNG.
Lat 38.765505 Long -90.178189

COUNTY Madison DRILLING METHOD HSA, NQ Casing HAMMER TYPE Automatic

STRUCT. NO. 060-0350 (EB)
Station 806+89.23

BORING NO. BB-10
Station 1785+71.61
Offset 40.9 ft R (EB)
Ground Surface Elev. 409.2 ft

Surface Water Elev. 379.6 ft
Stream Bed Elev. ft

Groundwater Elev.:
First Encounter ft
Upon Completion ft
After Hrs. ft

Description	Elev.	DEPTH (ft)	BLOWS (/6")	UCS Qu (tsf)	MOIST (%)
River surface elevation at 409.2 (+/-) feet. Surface elevation at river bottom = 385.4 (+/-) feet. Sampling began 23.5 feet below water level.		-5, -10, -15, -20			
	386.5	-25			
Samples not obtained of river deposits (sediment and sand).	385.6				
Borehole continued with rock coring.		-25, -30, -35, -40	50/1"	NC	--
	389.2				

The Unconfined Compressive Strength (UCS) Failure Mode is indicated by (B-Bulge, S-Shear, P-Penetrometer)
AASHTO Classifications are based on visual classifications unless otherwise noted BBS, form 137 (Rev. 8-99)

Illinois Department of Transportation
Division of Highways
sci engineering inc

ROCK CORE LOG

Page 1 of 2

Date 04/11/21

ROUTE FAI 270 DESCRIPTION I-270 over the Mississippi LOGGED BY SCI

SECTION 60B-1 LOCATION Pier 4, SEC., TWP. Land Grant 00114, RNG.
Lat 38.765505 Long -90.178189

COUNTY Madison CORING METHOD Conventional

STRUCT. NO. 060-0350 (EB)
Station 806+89.23

CORING BARREL TYPE & SIZE Solid Barrel NQ

Core Diameter 1.86 in
Top of Rock Elev. 385.6 ft
Begin Core Elev. 385.6 ft

BORING NO. BB-10
Station 1785+71.61
Offset 40.9 ft R (EB)
Ground Surface Elev. 409.2 ft

Description	Elev.	DEPTH (ft)	CORE (#)	RECOVERY (%)	R.Q.D. (%)	CORE TIME (min/ft)	STRENGTH (tsf)	MOISTURE (%)
Limestone: Light gray, hard to very hard, very finely crystalline to aphanitic, thin to thick bedding, slightly weathered, dense. *(continued)*		-25	1	97	64	6.2		
Depth 29.1', Dry Density: 161.0 pcf.							715.8	0.1
	379.4	-30						
Calcareous Sandstone: Gray to greenish-gray, very hard to hard, finely crystalline to aphanitic, thin to thick bedding, slightly weathered, dense, with clayey shale deposits.								
Depth 31.7', Dry Density: 156.7 pcf.			2	96	70	3.5	454.2	0.2
	375.3							
Limestone: Light gray, hard to very hard, finely crystalline to aphanitic, thin to thick bedding, slightly weathered, dense. *Depth 34.5', Dry Density: 161.2 pcf.*		-35	3	98	89	5.7	770.8	0.2
Depth 38.9', Dry Density: 163.4 pcf.		-40					778.8	0.2
	365.6							

Boring terminated at 43.6 feet.
Color pictures of the cores Yes
Cores will be stored for examination until competion
The "Strength" column represents the uniaxial compressive strength of the core sample (ASTM D-2938)
BBS, form 138 (Rev. 8-99)

Illinois Department of Transportation
Division of Highways
sci engineering inc

SOIL BORING LOG

Page 1 of 2

Date 10/28/20

ROUTE FAI 270 DESCRIPTION I-270 over the Mississippi River LOGGED BY SCI

SECTION 60B-1 LOCATION Pier 5, SEC., TWP. Land Grant 00114, RNG.
Lat 38.76537354 Long -90.17740575

COUNTY Madison DRILLING METHOD HSA, NQ Casing HAMMER TYPE Automatic

STRUCT. NO. 060-0350 (EB)
Station 806+89.23

BORING NO. BB-12
Station 1788+08.41
Offset 36.9 ft R (EB)
Ground Surface Elev. 393.4 ft

Surface Water Elev. 393.4 ft
Stream Bed Elev. ft

Groundwater Elev.:
First Encounter ft
Upon Completion ft
After Hrs. ft

Description	Elev.	DEPTH (ft)	BLOWS (/6")	UCS Qu (tsf)	MOIST (%)
River surface elevation at 393.4 (+/-) feet. Surface elevation at river bottom = 383.6 (+/-) feet. Sampling began 9.8 feet below water level.					
		-5			
	384.7				
Weathered Limestone					
	383.6	-10			
Borehole continued with rock coring.					
		-15			
		-20			

The Unconfined Compressive Strength (UCS) Failure Mode is indicated by (B-Bulge, S-Shear, P-Penetrometer)
AASHTO Classifications are based on visual classifications unless otherwise noted BBS, form 137 (Rev. 8-99)

Illinois Department of Transportation
Division of Highways
sci engineering inc

ROCK CORE LOG

Page 1 of 2

Date 10/28/20

ROUTE FAI 270 DESCRIPTION I-270 over the Mississippi River LOGGED BY SCI

SECTION 60B-1 LOCATION Pier 5, SEC., TWP. Land Grant 00114, RNG.
Lat 38.76537354 Long -90.17740575

COUNTY Madison CORING METHOD Conventional

STRUCT. NO. 060-0350 (EB)
Station 806+89.23

CORING BARREL TYPE & SIZE Solid Barrel NQ
Core Diameter 1.86 in
Top of Rock Elev. 384.7 ft
Begin Core Elev. 383.6 ft

BORING NO. BB-12
Station 1788+08.41
Offset 36.9 ft R (EB)
Ground Surface Elev. 393.4 ft

Description	Elev.	DEPTH (ft)	CORE (#)	RECOVERY (%)	R.Q.D. (%)	CORE TIME (min/ft)	STRENGTH (tsf)	MOISTURE (%)
Limestone: Light gray, moderately hard, very finely crystalline, thin to medium bedding, slightly to moderately weathered, dense.	383.6		1	88	61	5		
	380.6							
Sandy Limestone: Light gray, very hard, fine to coarse grained, banded to thinly bedded, fresh, interbedded with dark gray sandstone bands. *Depth 13.0', Dry Density: 162.4 pcf.*							539.8	0.1
		-15						
Depth 18.0', Dry Density: 156.8 pcf.							475.5	0.3
	373.6	-20	2	95	88	5		
Limestone: Light gray, moderately hard, very finely crystalline, thin to medium bedding, slightly to moderately weathered, dense. *Depth 20.6', Dry Density: 160.6 pcf.*							564.6	0.2
Depth 25.1', Dry Density: 159.9 pcf.		-25					414.3	0.2

Color pictures of the cores Yes
Cores will be stored for examination until completion
The "Strength" column represents the uniaxial compressive strength of the core sample (ASTM D-2938)
BBS, form 138 (Rev. 8-99)

Illinois Department of Transportation
Division of Highways
sci engineering inc

ROCK CORE LOG

Page 2 of 2

Date 10/28/20

ROUTE FAI 270 DESCRIPTION I-270 over the Mississippi River LOGGED BY SCI

SECTION 60B-1 LOCATION Pier 5, SEC., TWP. Land Grant 00114, RNG.
Lat 38.76537354 Long -90.17740575

COUNTY Madison CORING METHOD Conventional

STRUCT. NO. 060-0350 (EB)
Station 806+89.23

CORING BARREL TYPE & SIZE Solid Barrel NQ
Core Diameter 1.86 in
Top of Rock Elev. 384.7 ft
Begin Core Elev. 383.6 ft

BORING NO. BB-12
Station 1788+08.41
Offset 36.9 ft R (EB)
Ground Surface Elev. 393.4 ft

Description	Elev.	DEPTH (ft)	CORE (#)	RECOVERY (%)	R.Q.D. (%)	CORE TIME (min/ft)	STRENGTH (tsf)	MOISTURE (%)
Limestone: Light gray, moderately hard, very finely crystalline, thin to medium bedding, slightly to moderately weathered, dense. *(continued)* *Depth 30.0', Dry Density: 162.6 pcf.*			3	99	88	4	740.1	0.1
Depth 34.8', Dry Density: 159.9 pcf.		-35					710.0	0.3
	353.6	-40						
Boring terminated at 39.8 feet.								
		-45						

Color pictures of the cores Yes
Cores will be stored for examination until completion
The "Strength" column represents the uniaxial compressive strength of the core sample (ASTM D-2938)
BBS, form 138 (Rev. 8-99)

Illinois Department of Transportation
Division of Highways
sci engineering inc

SOIL BORING LOG

Page 1 of 2

Date 10/27/20

ROUTE FAI 270 DESCRIPTION I-270 over the Mississippi River LOGGED BY SCI

SECTION 60B-1 LOCATION Pier 6, SEC., TWP. Land Grant 00114, RNG.
Lat 38.76517488 Long -90.17661147

COUNTY Madison DRILLING METHOD HSA, NQ Casing HAMMER TYPE Automatic

STRUCT. NO. 060-0350 (EB)
Station 806+89.23

BORING NO. BB-14
Station 1790+46.17
Offset 35.8 ft R (EB)
Ground Surface Elev. 394.2 ft

Surface Water Elev. 394.2 ft
Stream Bed Elev. ft

Groundwater Elev.:
First Encounter ft
Upon Completion ft
After Hrs. ft

Description	Elev.	DEPTH (ft)	BLOWS (/6")	UCS Qu (tsf)	MOIST (%)
River surface elevation at 394.2 (+/-) feet. Surface elevation at river bottom = 387.6 (+/-) feet. Sampling began 6.6 feet below water level.		-5			
Sand: Brown, fine to coarse grained, very loose, A-3.	387.6		2 1 1	NC	--
Borehole continued with rock coring.	383.7	-10, -15, -20			

The Unconfined Compressive Strength (UCS) Failure Mode is indicated by (B-Bulge, S-Shear, P-Penetrometer)
AASHTO Classifications are based on visual classifications unless otherwise noted BBS, form 137 (Rev. 8-99)

Illinois Department of Transportation
Division of Highways
sci engineering inc

ROCK CORE LOG

Page 1 of 2

Date 10/27/20

ROUTE FAI 270 DESCRIPTION I-270 over the Mississippi River LOGGED BY SCI

SECTION 60B-1 LOCATION Pier 6, SEC., TWP. Land Grant 00114, RNG.
Lat 38.76517488 Long -90.17661147

COUNTY Madison CORING METHOD Conventional

STRUCT. NO. 060-0350 (EB)
Station 806+89.23

BORING NO. BB-14
Station 1790+46.17
Offset 35.8 ft R (EB)
Ground Surface Elev. 394.2 ft

CORING BARREL TYPE & SIZE Solid Barrel NQ
Core Diameter 1.86 in
Top of Rock Elev. 383.7 ft
Begin Core Elev. 383.7 ft

Description	Elev.	DEPTH (ft)	CORE (#)	RECOVERY (%)	R.Q.D. (%)	CORE TIME (min/ft)	STRENGTH (tsf)	MOISTURE (%)
Limestone: Light gray, very finely crystalline, banded to thinly bedded, fresh, dense.	383.7		1	91	83	4.5		
Depth 12.5', Dry Density: 163.8 pcf.		-15					462.8	0.1
Sandy Limestone: Light gray, very hard, fine to coarse grained, banded to thinly bedded, fresh, interbedded with dark gray sandstone bands. *Depth 18.6', Dry Density: 163.7 pcf.*	379.7	-20					621.1	0.1
Limestone: Light gray, very finely crystalline, thin to thick bedding, fresh, dense.	373.7		2	95	64	6.2		
Depth 24.6', Dry Density: 163.0 pcf.		-25					581.4	0.2
Depth 28.6', Dry Density: 165.5 pcf.		-30					650.1	0.2

Color pictures of the cores Yes
Cores will be stored for examination until completion
The "Strength" column represents the uniaxial compressive strength of the core sample (ASTM D-2938)
BBS, form 138 (Rev. 8-99)

Illinois Department of Transportation
Division of Highways
sci engineering inc

ROCK CORE LOG

Page 2 of 2

Date 10/27/20

ROUTE FAI 270 DESCRIPTION I-270 over the Mississippi River LOGGED BY SCI

SECTION 60B-1 LOCATION Pier 6, SEC., TWP. Land Grant 00114, RNG.
Lat 38.76517488 Long -90.17661147

COUNTY Madison CORING METHOD Conventional

STRUCT. NO. 060-0350 (EB)
Station 806+89.23

BORING NO. BB-14
Station 1790+46.17
Offset 35.8 ft R (EB)
Ground Surface Elev. 394.2 ft

CORING BARREL TYPE & SIZE Solid Barrel NQ
Core Diameter 1.86 in
Top of Rock Elev. 383.7 ft
Begin Core Elev. 383.7 ft

Description	Elev.	DEPTH (ft)	CORE (#)	RECOVERY (%)	R.Q.D. (%)	CORE TIME (min/ft)	STRENGTH (tsf)	MOISTURE (%)
Limestone: Light gray, very finely crystalline, thin to thick bedding, fresh, dense. *(continued)*			3	100	66	6.7		
Depth 34.6', Dry Density: 165.3 pcf.		-35					837.9	0.2
Depth 39.6', Dry Density: 165.7 pcf.		-40					617.3	0.2
Boring terminated at 40.5 feet.	353.7	-45, -50						

Color pictures of the cores Yes
Cores will be stored for examination until completion
The "Strength" column represents the uniaxial compressive strength of the core sample (ASTM D-2938)
BBS, form 138 (Rev. 8-99)

Illinois Department of Transportation
Division of Highways
sci engineering inc

SOIL BORING LOG

Page 1 of 2

Date 04/10/21

ROUTE FAI 270 DESCRIPTION I-270 over the Mississippi River LOGGED BY SCI

SECTION 60B-1 LOCATION Pier 7 SEC. TWP. Land Grant 00114, RNG.
Lat 38.785035 Long -90.175830

COUNTY Madison DRILLING METHOD HSA, NQ Casing HAMMER TYPE Automatic

STRUCT. NO. 060-0350 (EB)
Station 806+89.23

BORING NO. BB-18
Station 1792+82.43
Offset 35.8 ft R (EB)
Ground Surface Elev. 407.8 ft

Surface Water Elev. 399.1 ft
Stream Bed Elev. ft

Groundwater Elev.:
First Encounter ft
Upon Completion ft
After Hrs. ft

Description	Elev.	DEPTH (ft)	BLOWS (/6")	UCS Qu (tsf)	MOIST (%)
River surface elevation at 407.8 (+/-) feet. Surface elevation at river bottom = 400.0 (+/-) feet. Sampling began 11.5 feet below water level.					
		-5			
Sand: Brown, fine-grained, very loose, A-3.	400.0	-10	1 2 1	NC	--
		-15			
		-20	3 4 4	NC	--
Sand: Brown, fine-grained, very loose, A-3. *(continued)*					
Clay Loam: Dark gray, soft, A-7.	386.3 / 385.8		2 3 3	NC	--
Sand: Gray, fine-grained, loose, A-3.		-25			
Borehole continued with rock coring.	380.9	-30	50/1"	NC	--
		-35			
		-40			

The Unconfined Compressive Strength (UCS) Failure Mode is indicated by (B-Bulge, S-Shear, P-Penetrometer)
AASHTO Classifications are based on visual classifications unless otherwise noted BBS, form 137 (Rev. 8-99)

Illinois Department of Transportation
Division of Highways
sci engineering inc

ROCK CORE LOG

Page 1 of 2

Date 04/10/21

ROUTE FAI 270 DESCRIPTION I-270 over the Mississippi River LOGGED BY SCI

SECTION 60B-1 LOCATION Pier 7 SEC. TWP. Land Grant 00114, RNG.
Lat 38.785035 Long -90.175830

COUNTY Madison CORING METHOD Conventional

STRUCT. NO. 060-0350 (EB)
Station 806+89.23

CORING BARREL TYPE & SIZE Solid Barrel NQ
Core Diameter 1.86 in
Top of Rock Elev. 380.9 ft
Begin Core Elev. 380.7 ft

BORING NO. BB-18
Station 1792+82.43
Offset 35.8 ft R (EB)
Ground Surface Elev. 407.8 ft

Description	Elev.	DEPTH (ft)	CORE (#)	RECOVERY (%)	R.Q.D. (%)	CORE TIME (min/ft)	STRENGTH (tsf)	MOISTURE (%)
Limestone: Light gray, hard to very hard, very finely crystalline to aphanitic, banded to medium bedding, slightly weathered, dense, with clayey shale deposits. *(continued)*			1	96	69	4.1		
Depth 28.5', Dry Density: 165.5 pcf.		-30					834.7	0.1
Depth 34.4', Dry Density: 165.4 pcf.		-35					827.5	0.1
Calcareous Sandstone: Light gray to greenish-gray, hard to very hard, finely crystalline, medium bedding, slightly weathered, dense, calcareous, dense, with clayey shale deposits.	372.1							
		-40	2	98	70	5.4		
Limestone: Gray, hard to very hard, very finely crystalline, banded to massive bedding, slightly weathered, dense. *Depth 40.3', Dry Density: 165.0 pcf.*	367.8						585.5	0.3
Depth 43.7', Dry Density: 161.2 pcf.		-45					370.4	0.5
	360.7							

Color pictures of the cores Yes
Cores will be stored for examination until completion
The "Strength" column represents the uniaxial compressive strength of the core sample (ASTM D-2938)
BBS, form 138 (Rev. 8-99)

Illinois Department of Transportation
Division of Highways
sci engineering inc

ROCK CORE LOG

Page 2 of 2

Date 04/10/21

ROUTE FAI 270 DESCRIPTION I-270 over the Mississippi River LOGGED BY SCI

SECTION 60B-1 LOCATION Pier 7 SEC. TWP. Land Grant 00114, RNG.
Lat 38.785035 Long -90.175830

COUNTY Madison CORING METHOD Conventional

STRUCT. NO. 060-0350 (EB)
Station 806+89.23

CORING BARREL TYPE & SIZE Solid Barrel NQ
Core Diameter 1.86 in
Top of Rock Elev. 380.9 ft
Begin Core Elev. 380.7 ft

BORING NO. BB-18
Station 1792+82.43
Offset 35.8 ft R (EB)
Ground Surface Elev. 407.8 ft

Description	Elev.	DEPTH (ft)	CORE (#)	RECOVERY (%)	R.Q.D. (%)	CORE TIME (min/ft)	STRENGTH (tsf)	MOISTURE (%)
Limestone: Gray, hard to very hard, very finely crystalline, banded to massive bedding, slightly weathered, dense. *(continued)* *Depth 47.3', Dry Density: 162.8 pcf.*		-50	3	98	80	4.8	503.4	0.2
Depth 54.8', Dry Density: 164.8 pcf.		-55					549.2	0.1
	350.7							
Boring terminated at 57.1 feet,		-60						
		-65						

Color pictures of the cores Yes
Cores will be stored for examination until completion
The "Strength" column represents the uniaxial compressive strength of the core sample (ASTM D-2938)
BBS, form 138 (Rev. 8-99)

Illinois Department of Transportation
Division of Highways
sci engineering inc

SOIL BORING LOG

Date 10/06/20

ROUTE FAI 270 DESCRIPTION I-270 over the Mississippi River LOGGED BY SCI

SECTION 60B-1 LOCATION Pier 8 SEC. TWP. Land Grant 00114, RNG.
Lat 38.764797 Long -90.175038

COUNTY Madison DRILLING METHOD HSA, NQ Casing HAMMER TYPE Automatic

STRUCT. NO. 060-0350 (EB)
Station 806+89.23

BORING NO. BB-20
Station 1795+12.94
Offset 26.4 ft R (EB)
Ground Surface Elev. 389.2 ft

Surface Water Elev. 389.2 ft
Stream Bed Elev. ft

Groundwater Elev.:
First Encounter ft
Upon Completion ft
After Hrs. ft

Description	Elev.	DEPTH (ft)	BLOWS (/6")	UCS Qu (tsf)	MOIST (%)
River surface elevation at 389.2 (+/-) feet. Surface elevation at river bottom = 385.8 (+/-) feet. Sampling began 3.4 feet below water level.					
Silt: Gray, wet, soft, A-4.	385.8 / 385.6		1 1 1	NC	--
Sand: Gray, wet, fine-grained, very loose, A-3.		-5			
			2 2 3	NC	--
		-10			
Medium dense.			4 5 5	NC	--
		-15			
Weathered limestone: Gray.	373.0 / 372.5		50/1.5	NC	--
Borehole continued with rock coring.		-20			

The Unconfined Compressive Strength (UCS) Failure Mode is indicated by (B-Bulge, S-Shear, P-Penetrometer)
AASHTO Classifications are based on visual classifications unless otherwise noted BBS, form 137 (Rev. 8-99)

Illinois Department of Transportation
Division of Highways
sci engineering inc

ROCK CORE LOG

Date 10/06/20

ROUTE FAI 270 DESCRIPTION I-270 over the Mississippi River LOGGED BY SCI

SECTION 60B-1 LOCATION Pier 8 SEC. TWP. Land Grant 00114, RNG.
Lat 38.764797 Long -90.175038

COUNTY Madison CORING METHOD Conventional

STRUCT. NO. 060-0350 (EB)
Station 806+89.23

CORING BARREL TYPE & SIZE Solid Barrel NQ
Core Diameter 1.86 in
Top of Rock Elev. 373.0 ft
Begin Core Elev. 372.5 ft

BORING NO. BB-20
Station 1795+12.94
Offset 26.4 ft R (EB)
Ground Surface Elev. 389.2 ft

Description	Elev.	DEPTH (ft)	CORE (#)	RECOVERY (%)	R.Q.D. (%)	CORE TIME (min/ft)	STRENGTH (tsf)	MOISTURE (%)
Limestone: Gray, aphanitic, thinly bedded, slightly weathered, dense.	372.5		1	100	0	4		
			2	95	49	2.5		
Depth 20.1', Dry Density: 164.8 pcf.		-20					1173.9	0.1
Sandy Limestone: Gray, soft, very finely crystalline, thinly bedded, slightly weathered, dense.	367.5							
Clayey Shale: Green.	364.2	-25						
Limestone: Gray, soft, aphanitic, thinly bedded, slightly weathered, dense.	363.3						1029.0	0.1
Depth 25.9', Dry Density: 164.2 pcf.			3	96	83	2.8		
Depth 27.9', Dry Density: 164.8 pcf.							855.3	0.2
		-30						
		-35						
Depth 35.5', Dry Density: 164.6 pcf.							864.5	0.7
	352.5							

Color pictures of the cores Yes
Cores will be stored for examination until completion
The "Strength" column represents the uniaxial compressive strength of the core sample (ASTM D-2938)
BBS, form 138 (Rev. 8-99)

Illinois Department of Transportation
Division of Highways
sci engineering inc

ROCK CORE LOG

Date 10/06/20

ROUTE FAI 270 DESCRIPTION I-270 over the Mississippi River LOGGED BY SCI

SECTION 60B-1 LOCATION Pier 8 SEC. TWP. Land Grant 00114, RNG.
Lat 38.764797 Long -90.175038

COUNTY Madison CORING METHOD Conventional

STRUCT. NO. 060-0350 (EB)
Station 806+89.23

CORING BARREL TYPE & SIZE Solid Barrel NQ
Core Diameter 1.86 in
Top of Rock Elev. 373.0 ft
Begin Core Elev. 372.5 ft

BORING NO. BB-20
Station 1795+12.94
Offset 26.4 ft R (EB)
Ground Surface Elev. 389.2 ft

Description	Elev.	DEPTH (ft)	CORE (#)	RECOVERY (%)	R.Q.D. (%)	CORE TIME (min/ft)	STRENGTH (tsf)	MOISTURE (%)
Sandy Limestone: Light gray, soft, finely crystalline, thinly bedded, slightly weathered, dense.			4	100	98	2.4		
Depth 39.2', Dry Density: 164.0 pcf.		-40					929.8	0.1
Limestone: Light gray, hard, aphanitic, medium to thickly bedded, slightly weathered, dense.	349.0							
		-45						
Depth 45.8', Dry Density: 165.7 pcf.							570.7	0.1
	342.5							
Boring terminated at 46.7 feet.		-50						
		-55						

Color pictures of the cores Yes
Cores will be stored for examination until completion
The "Strength" column represents the uniaxial compressive strength of the core sample (ASTM D-2938)
BBS, form 138 (Rev. 8-99)

Illinois Department of Transportation
Division of Highways
sci engineering inc

SOIL BORING LOG

Page 1 of 1

Date 11/27/18

ROUTE FAI 270 DESCRIPTION I-270 over the Mississippi River LOGGED BY SCI

SECTION 60B-1 LOCATION Pier 9 SEC. TWP. Land Grant 00114, RNG.
Lat 38.76466 Long -90.174188

COUNTY Madison DRILLING METHOD HSA, NQ Casing HAMMER TYPE Automatic

STRUCT. NO. 060-0350 (EB)
Station 806+89.23

BORING NO. BB-16A
Station 1797+61.34
Offset 1.0 ft R (EB)
Ground Surface Elev. 400.2 ft

Surface Water Elev. 400.2 ft
Stream Bed Elev. ft

Groundwater Elev.:
First Encounter ft
Upon Completion ft
After Hrs. ft

Description	Elev.	DEPTH (ft)	BLOWS (/6")	UCS Qu (tsf)	MOIST (%)
River surface elevation at 400.2 (+/-) feet. Surface elevation at river bottom = 380.1 (+/-) feet. Sampling began 20.1 feet below water level.		-5, -10, -15, -20			
Sand: Brown, fine grained, loose to very dense, A-2.	380.1	-25, -30, -35, -40	5 4 4	NC	--
Borehole continued with rock coring.	366.6		100	NC	--

The Unconfined Compressive Strength (UCS) Failure Mode is indicated by (B-Bulge, S-Shear, P-Penetrometer)
AASHTO Classifications are based on visual classifications unless otherwise noted BBS, form 137 (Rev. 8-99)

Illinois Department of Transportation
Division of Highways
sci engineering inc

ROCK CORE LOG

Page 1 of 1

Date 11/27/18

ROUTE FAI 270 DESCRIPTION I-270 over the Mississippi River LOGGED BY SCI

SECTION 60B-1 LOCATION Pier 9 SEC. TWP. Land Grant 00114, RNG.
Lat 38.76466 Long -90.174188

COUNTY Madison CORING METHOD Conventional

STRUCT. NO. 060-0350 (EB)
Station 806+89.23

BORING NO. BB-16A
Station 1797+61.34
Offset 1.0 ft R (EB)
Ground Surface Elev. 400.2 ft

CORING BARREL TYPE & SIZE Solid Barrel NQ

Core Diameter 1.86 in
Top of Rock Elev. 366.6 ft
Begin Core Elev. 366.6 ft

Description	Elev.	DEPTH (ft)	CORE (#)	RECOVERY (%)	R.Q.D. (%)	CORE TIME (min/ft)	STRENGTH (tsf)	MOISTURE (%)
Limestone: Gray, moderately hard to hard, banded to thinly bedded, slightly weathered, dense. *Depth 34.2'. Dry Density: 165.7 pcf.* 4" Closed vertical fracture.	366.6	-35	1	93	45	6.8	771.3	0.2
Boring terminated at 37.3 feet.	362.9	-40, -45, -50						

Color pictures of the cores Yes
Cores will be stored for examination until completion
The "strength" column represents the uniaxial compressive strength of the core sample (ASTM D-2938)
BBS, form 138 (Rev. 8-99)

Illinois Department of Transportation
Division of Highways
sci engineering inc

SOIL BORING LOG

Page 1 of 1

Date 11/28/18

ROUTE FAI 270 DESCRIPTION I-270 over the Mississippi River LOGGED BY SCI

SECTION 60B-1 LOCATION Pier 9 SEC. TWP. Land Grant 00114, RNG.
Lat 38.76462 Long -90.17426

COUNTY Madison DRILLING METHOD HSA, NQ Casing HAMMER TYPE Automatic

STRUCT. NO. 060-0350 (EB)
Station 806+89.23

BORING NO. BB-16B
Station 1797+61.34
Offset 1.0 ft R (EB)
Ground Surface Elev. 400.2 ft

Surface Water Elev. 400.2 ft
Stream Bed Elev. ft

Groundwater Elev.:
First Encounter ft
Upon Completion ft
After Hrs. ft

Description	Elev.	DEPTH (ft)	BLOWS (/6")	UCS Qu (tsf)	MOIST (%)
River surface elevation at 400.2 (+/-) feet. Sampling began 22.0 feet below water level.		-5, -10, -15, -20			
Sand: Gray, fine to coarse grained, Sampling not performed. See BB-16A. A-2.	378.2	-25, -30, -35, -40			
Borehole continued with rock coring.	367.4				

The Unconfined Compressive Strength (UCS) Failure Mode is indicated by (B-Bulge, S-Shear, P-Penetrometer)
AASHTO Classifications are based on visual classifications unless otherwise noted BBS, form 137 (Rev. 8-99)

Illinois Department of Transportation
Division of Highways
sci engineering inc

ROCK CORE LOG

Page 1 of 1

Date 11/28/18

ROUTE FAI 270 DESCRIPTION I-270 over the Mississippi River LOGGED BY SCI

SECTION 60B-1 LOCATION Pier 9 SEC. , TWP. Land Grant 00114, RNG.
Lat 38.76462 Long -90.17426

COUNTY Madison CORING METHOD Conventional

STRUCT. NO. 060-0350 (EB)
Station 806+89.23

CORING BARREL TYPE & SIZE Solid Barrel NQ
Core Diameter 1.86 in
Top of Rock Elev. 367.4 ft
Begin Core Elev. 367.4 ft

BORING NO. BB-16B
Station 1797+61.34
Offset 1.0 ft R (EB)
Ground Surface Elev. 400.2 ft

	DEPTH (ft)	CORE (#)	RECOVERY (%)	R.Q.D. (%)	CORE TIME (min/ft)	STRENGTH (tsf)	MOISTURE (%)
Limestone: Gray, moderately hard, very finely crystalline, banded to thinly bedded, 367.4 slightly weathered, dense.		1	90	52	5.4		
	-35						
Tan.							
Depth 36.0', Dry Density: 164.3 pcf.						871.0	0.2
Thinly to medium bedded.							
361.2							
Boring terminated at 39.0 feet.	-40						
	-45						
	-50						

Color pictures of the cores Yes
Cores will be stored for examination until completion
The "Strength" column represents the uniaxial compressive strength of the core sample (ASTM D-2938)
BBS, form 138 (Rev. 8-99)

Illinois Department of Transportation
Division of Highways
sci engineering inc

SOIL BORING LOG

Page 1 of 2

Date 11/29/18

ROUTE FAI 270 DESCRIPTION I-270 over the Mississippi River LOGGED BY SCI

SECTION 60B-1 LOCATION Pier 9 SEC. , TWP. Land Grant 00114, RNG.
Lat 38.76463 Long -90.17427

COUNTY Madison DRILLING METHOD HSA, NQ Casing HAMMER TYPE Automatic

STRUCT. NO. 060-0350 (EB)
Station 806+89.23

Surface Water Elev. 400.2 ft
Stream Bed Elev. ft

Groundwater Elev.:
First Encounter ft
Upon Completion ft
After Hrs. ft

BORING NO. BB-16C
Station 1797+61.34
Offset 1.0 ft R (EB)
Ground Surface Elev. 400.2 ft

	DEPTH (ft)	BLOWS (/6")	UCS Qu (tsf)	MOIST (%)
River surface elevation at 400.2 (+/-) feet. Surface elevation at river bottom = 377.8 (+/-) feet. Sampling began 22.4 feet below water level.				
	-10			
	-15			
380.2	-20			

	DEPTH (ft)	BLOWS (/6")	UCS Qu (tsf)	MOIST (%)
377.8				
Sand: Gray, fine to coarse grained, Sampling not performed. See BB-16A. A-2.	-25			
372.9				
Borehole continued with rock coring.	-30			
	-35			
	-40			

The Unconfined Compressive Strength (UCS) Failure Mode is indicated by (B-Bulge, S-Shear, P-Penetrometer)
AASHTO Classifications are based on visual classifications unless otherwise noted BBS, form 137 (Rev. 8-99)

Illinois Department of Transportation
Division of Highways
sci engineering inc

ROCK CORE LOG

Page 1 of 2

Date 11/29/18

ROUTE FAI 270 DESCRIPTION I-270 over the Mississippi River LOGGED BY SCI

SECTION 60B-1 LOCATION Pier 16 SEC. , TWP. Land Grant 00114, RNG.
Lat 38.76463 Long -90.17427

COUNTY Madison CORING METHOD Conventional

STRUCT. NO. 060-0350 (EB)
Station 806+89.23

CORING BARREL TYPE & SIZE Solid Barrel NQ
Core Diameter 1.86 in
Top of Rock Elev. 373.6 ft
Begin Core Elev. 372.9 ft

BORING NO. BB-16C
Station 1797+61.34
Offset 1.0 ft R (EB)
Ground Surface Elev. 400.2 ft

	DEPTH (ft)	CORE (#)	RECOVERY (%)	R.Q.D. (%)	CORE TIME (min/ft)	STRENGTH (tsf)	MOISTURE (%)
Limestone: Light gray, very hard, finely crystalline, banded to thinly bedded, 372.9 slightly weathered, moderately fractured, with fine sand.		1	100	36	6		
Depth 27.55', Dry Density: 167.8 pcf.						689.1	0.1
Moderately weathered, highly fractured, with fractures infilled by light green shaley clay.	-30						
367.6		2	100	70	3.8		
Calcareous Sandstone: Light greenish-gray, and olive, very hard, fine grained, parted to banded, cross-bedding, slightly weathered, slightly fractured, glauconitic. *Depth 33.4', Dry Density: 152.8 pcf.*						301.9	0.4
Fine to coarse grained.	-35						
With interbedded shale laminations and partings. 364.2							
Limestone: Gray, very hard, finely crystalline, banded to thinly bedded, slightly weathered, slightly fractured, with fine sand. Thinly bedded, trace siltstone laminations along fracture planes.		3	97	72	3		
361.4							
Sandy Limestone: Light gray, very hard, finely crystalline, sand is fine grained, laminated bedding, slightly weathered, moderately fractured, with interbedded siltstone laminations.	-40						
Slightly weathered, slightly fractured.							
Depth 44.1', Dry Density: 161.9 pcf. 355.6							
Sandy Limestone: Light gray, very hard, fine to coarse grained, banded to thinly bedded, fresh, slightly fractured, oolitic, interbedded with dark gray sandstone bands.	-45					344.9	0.9

Color pictures of the cores Yes
Cores will be stored for examination until completion
The "Strength" column represents the uniaxial compressive strength of the core sample (ASTM D-2938)
BBS, form 138 (Rev. 8-99)

Illinois Department of Transportation
Division of Highways
sci engineering inc

ROCK CORE LOG

Date 11/29/18

ROUTE FAI 270 DESCRIPTION I-270 over the Mississippi River LOGGED BY SCI

SECTION 60B-1 LOCATION Pier 16, SEC. , TWP. Land Grant 00114, RNG.
Lat 38.76463 Long -90.17427

COUNTY Madison CORING METHOD Conventional

STRUCT. NO. 060-0350 (EB) CORING BARREL TYPE & SIZE Solid Barrel NQ
Station 806+89.23

Core Diameter 1.86 in
Top of Rock Elev. 373.6 ft
Begin Core Elev. 372.9 ft

BORING NO. BB-16C
Station 1797+61.34
Offset 1.0 ft R (EB)
Ground Surface Elev. 400.2 ft

	DEPTH (ft)	CORE (#)	RECOVERY (%)	R.Q.D. (%)	CORE TIME (min/ft)	STRENGTH (tsf)	MOISTURE (%)
Sandy Limestone: Light gray, very hard, fine to coarse grained, banded to thinly bedded, fresh, slightly fractured, oolitic, interbedded with dark gray sandstone bands. *(continued)*		4	98	84	5.6		
	-50						
Depth 49.9', Dry Density: 166.0 pcf.	349.6						
Limestone: Light gray and white, very hard, finely crystalline, banded, slightly weathered, slightly fractured, some interbedded fine grained sandstone beds.						850.8	0.2
Thickly bedded, no sandstone interbeds, trace fine sand.	-55						
	342.9						
Boring terminated at 56.6 feet.							
	-60						
	-65						

Color pictures of the cores Yes
Cores will be stored for examination until completion
The "Strength" column represents the uniaxial compressive strength of the core sample (ASTM D-2938)

BBS, form 138 (Rev. 8-99)

Illinois Department of Transportation
Division of Highways
sci engineering inc

SOIL BORING LOG

Date 10/08/20

ROUTE FAI 270 DESCRIPTION I-270 over the Mississippi River LOGGED BY SCI

SECTION 60B-1 LOCATION Pier 10, SEC., TWP. Land Grant 00114, RNG.
Lat 38.764391 Long -90.173589

COUNTY Madison DRILLING METHOD HSA, NQ Casing HAMMER TYPE Automatic

STRUCT. NO. 060-0350 (EB)
Station 806+89.23

BORING NO. BB-22
Station 1799+51.58
Offset 39.6 ft R (EB)
Ground Surface Elev. 388.8 ft

Surface Water Elev. 388.8 ft
Stream Bed Elev. ft

Groundwater Elev.:
First Encounter ft
Upon Completion ft
After Hrs. ft

Description	Elev.	DEPTH (ft)	BLOWS (/6")	UCS Qu (tsf)	MOIST (%)
River surface elevation at 388.8 (+/-) feet. Surface elevation at river bottom = 370.9 (+/-) feet. Sampling began 17.9 feet below water level.		-5, -10, -15, -20			
	370.9				
Sand: Brownish-gray, fine-grained, loose, A-3.	370.3		1 3 50/4"	NC	--
Weathered Limestone.	369.0				

Borehole continued with rock coring.

The Unconfined Compressive Strength (UCS) Failure Mode is indicated by (B-Bulge, S-Shear, P-Penetrometer)
AASHTO Classifications are based on visual classifications unless otherwise noted BBS, form 137 (Rev. 8-99)

Illinois Department of Transportation
Division of Highways
sci engineering inc

ROCK CORE LOG

Date 10/08/20

ROUTE FAI 270 DESCRIPTION I-270 over the Mississippi River LOGGED BY SCI

SECTION 60B-1 LOCATION Pier 10, SEC., TWP. Land Grant 00114, RNG.
Lat 38.764391 Long -90.173589

COUNTY Madison CORING METHOD Conventional

STRUCT. NO. 060-0350 (EB)
Station 806+89.23

CORING BARREL TYPE & SIZE Solid Barrel NQ
Core Diameter 1.86 in
Top of Rock Elev. 369.0 ft
Begin Core Elev. 369.0 ft

BORING NO. BB-22
Station 1799+51.58
Offset 39.6 ft R (EB)
Ground Surface Elev. 388.8 ft

Description	Elev.	DEPTH (ft)	CORE (#)	RECOVERY (%)	R.Q.D. (%)	CORE TIME (min/ft)	STRENGTH (tsf)	MOISTURE (%)
Limestone: Gray, hard, very finely crystalline, thinly bedded, slightly weathered, some stylolites	369.0		1	95	35	3.1		
Depth 22.2', Dry Density: 166.0 pcf.							567.2	0.1
Oolitic Limestone: Gray, hard, finely to medium crystalline, thinly bedded, slightly weathered, dense.	364.8	-25						
Limestone: Gray, hard, very finely crystalline, thickly bedded, slightly weathered, dense, trace stylolites.	360.5		2	100	100	3.5		
Depth 26.8', Dry Density: 165.6 pcf.							838.8	0.2
Argillaceous Limestone: Gray, hard, very finely crystalline, thickly bedded, slightly weathered, dense.	359.0	-30	3	98	89	2.2		
Depth 31.0', Dry Density: 162.9 pcf.							691.2	0.2
Limestone: Gray, hard, very finely crystalline, thickly bedded, slightly weathered, dense.	357.0	-35						
Depth 38.0', Dry Density: 164.2 pcf.							690.2	0.2
Finely crystalline, thick to massive bedding, fresh to slightly weathered, trace shale partings.	349.0							

Color pictures of the cores Yes
Cores will be stored for examination until completion
The "Strength" column represents the uniaxial compressive strength of the core sample (ASTM D-2938)
BBS, form 138 (Rev. 8-99)

Illinois Department of Transportation
Division of Highways
sci engineering inc

ROCK CORE LOG

Date 10/08/20

ROUTE FAI 270 DESCRIPTION I-270 over the Mississippi River LOGGED BY SCI

SECTION 60B-1 LOCATION Pier 10, SEC., TWP. Land Grant 00114, RNG.
Lat 38.764391 Long -90.173589

COUNTY Madison CORING METHOD Conventional

STRUCT. NO. 060-0350 (EB)
Station 806+89.23

CORING BARREL TYPE & SIZE Solid Barrel NQ
Core Diameter 1.86 in
Top of Rock Elev. 369.0 ft
Begin Core Elev. 369.0 ft

BORING NO. BB-22
Station 1799+51.58
Offset 39.6 ft R (EB)
Ground Surface Elev. 388.8 ft

Description	Elev.	DEPTH (ft)	CORE (#)	RECOVERY (%)	R.Q.D. (%)	CORE TIME (min/ft)	STRENGTH (tsf)	MOISTURE (%)
Limestone: Gray, hard, finely crystalline, thick to massive bedding, fresh to slightly weathered, dense.			4	99	97	2		
Depth 41.9', Dry Density: 166.3 pcf.							602.1	0.1
		-45						
Depth 45.9', Dry Density: 167.2 pcf.							658.3	0.1
1 inch shaley clay seam								
2 inch vertical fracture	339.0	-50						
Boring terminated at 49.8 feet.		-55						

Color pictures of the cores Yes
Cores will be stored for examination until completion
The "Strength" column represents the uniaxial compressive strength of the core sample (ASTM D-2938)
BBS, form 138 (Rev. 8-99)

MODEL: Default
FILE NAME: C:\ICS4PDF\9297\45087_576\060-0350-D876190-cda-11aBOR.dgn

CDI CIVIL DESIGN, INC.

USER NAME =	DESIGNED -	REVISED -
	CHECKED -	REVISED -
PLOT SCALE =	DRAWN - JGS	REVISED -
PLOT DATE =	CHECKED -	REVISED -

STATE OF ILLINOIS
DEPARTMENT OF TRANSPORTATION

BORING LOGS – PIER 10
STRUCTURE NO. 060–0350 (EB)

SHEET 259 OF 292 SHEETS

F.AJ RTE.	SECTION	COUNTY	TOTAL SHEETS	SHEET NO.
270	60B-1	MADISON	860	459
		CONTRACT NO. 76J90		
		ILLINOIS FED. AID PROJECT		

9/13/2021 8:28:37 PM

Illinois Department of Transportation
Division of Highways
sci engineering inc

SOIL BORING LOG

Page 1 of 1

Date 10/14/20

ROUTE FAI 270 DESCRIPTION I-270 over the Mississippi River LOGGED BY SCI

SECTION 60B-1 LOCATION Pier 11, SEC., TWP. Land Grant 00114, RNG.
Lat 38.764277 Long -90.172991

COUNTY Madison DRILLING METHOD HSA, NQ Casing HAMMER TYPE Automatic

STRUCT. NO. 060-0350 (EB)
Station 806+89.23

BORING NO. BB-24
Station 1801+26.60
Offset 26.5 ft R (EB)
Ground Surface Elev. 388.6 ft

Surface Water Elev. 388.6 ft
Stream Bed Elev. ft

Groundwater Elev.:
First Encounter ft
Upon Completion ft
After Hrs. ft

Description	Elev.	DEPTH (ft)	BLOWS (/6")	UCS Qu (tsf)	MOIST (%)
River surface elevation at 388.6 (+/-) feet. Surface elevation at river bottom = 366.9 (+/-) feet. Sampling began 22.0 feet below water level.		-5, -10, -15, -20			
Sand: Brown, fine to coarse grained, loose, A-3.	366.6	-25, -30, -35, -40	2 2 3	NC	--
Weathered Limestone.	364.7				
Borehole continued with rock coring.	364.2				

The Unconfined Compressive Strength (UCS) Failure Mode is indicated by (B-Bulge, S-Shear, P-Penetrometer)
AASHTO Classifications are based on visual classifications unless otherwise noted BBS, form 137 (Rev. 8-99)

Illinois Department of Transportation
Division of Highways
sci engineering inc

ROCK CORE LOG

Page 1 of 1

Date 10/14/20

ROUTE FAI 270 DESCRIPTION I-270 over the Mississippi River LOGGED BY SCI

SECTION 60B-1 LOCATION Pier 11, SEC., TWP. Land Grant 00114, RNG.
Lat 38.764277 Long -90.172991

COUNTY Madison CORING METHOD Conventional

STRUCT. NO. 060-0350 (EB)
Station 806+89.23

CORING BARREL TYPE & SIZE Solid Barrel NQ
Core Diameter 1.86 in
Top of Rock Elev. 364.7 ft
Begin Core Elev. 364.2 ft

BORING NO. BB-24
Station 1801+26.60
Offset 26.5 ft R (EB)
Ground Surface Elev. 388.6 ft

Description	Elev.	DEPTH (ft)	CORE (#)	RECOVERY (%)	R.Q.D. (%)	CORE TIME (min/ft)	STRENGTH (tsf)	MOISTURE (%)
Limestone: Light gray, hard, very finely crystalline, thinly bedded, slightly to moderately weathered, dense.	364.2	-25	1	88	48	5.4		
Depth 29.0 feet. Dry Density: 166.1 pcf.							799.9	0.1
Sandy Limestone: Gray, hard, fine-grained, thinly to medium bedded, slightly weathered, dense to pitted.	358.9	-30						
Depth 32.6 feet. Dry Density: 163.7 pcf.							558.3	0.2
Shaley Clay: Greenish-gray	355.2							
Argillaceous Limestone: Light gray, hard, aphanitic, thinly bedded, slightly weathered. Moderately hard to hard, medium bedding, with shale partings. *Depth 39.0 feet. Dry Density: 165.3 pcf.*	354.9	-35, -40	2	100	93	3.9	800.0	0.3
Limestone: Gray, hard finely crystalline, medium bedded, slightly weathered, dense. 8.5 inch vertical joint at 46.9 feet. *Depth 43.6 feet. Dry Density: 164.1 pcf.*	347.2 / 344.2						604.9	0.2

Color pictures of the cores Yes
Cores will be stored for examination until completion
The "Strength" column represents the uniaxial compressive strength of the core sample (ASTM D-2938)
BBS, form 138 (Rev. 8-99)

Illinois Department of Transportation
Division of Highways
sci engineering inc

ROCK CORE LOG

Page 2 of 1

Date 10/14/20

ROUTE FAI 270 DESCRIPTION I-270 over the Mississippi River LOGGED BY SCI

SECTION 60B-1 LOCATION Pier 11, SEC., TWP. Land Grant 00114, RNG.
Lat 38.764277 Long -90.172991

COUNTY Madison CORING METHOD Conventional

STRUCT. NO. 060-0350 (EB)
Station 806+89.23

CORING BARREL TYPE & SIZE Solid Barrel NQ
Core Diameter 1.86 in
Top of Rock Elev. 364.7 ft
Begin Core Elev. 364.2 ft

BORING NO. BB-24
Station 1801+26.60
Offset 26.5 ft R (EB)
Ground Surface Elev. 388.6 ft

Description	Elev.	DEPTH (ft)	CORE (#)	RECOVERY (%)	R.Q.D. (%)	CORE TIME (min/ft)	STRENGTH (tsf)	MOISTURE (%)
Limestone: gray, hard, very finely crystalline, medium to thickly bedded, slightly weathered. *Depth 45.1 feet. Dry Density: 161.9 pcf.*		-45, -50	3	100	90	2.3	744.3	0.2
Depth 52.6 feet. Dry Density: 166.1 pcf.							773.8	0.1
Boring terminated at 54.4 feet.	334.2	-55, -60						

Color pictures of the cores Yes
Cores will be stored for examination until completion
The "Strength" column represents the uniaxial compressive strength of the core sample (ASTM D-2938)
BBS, form 138 (Rev. 8-99)

MODEL: Default
FILE NAME: C:\ICS4PDF\9297\45087_577\060-0350-D876190-cda-12aBOR.dgn
9/13/2021 8:28:05 PM

CDI CIVIL DESIGN, INC.

USER NAME =	DESIGNED -	REVISED -
	CHECKED -	REVISED -
PLOT SCALE =	DRAWN - JGS	REVISED -
PLOT DATE =	CHECKED -	REVISED -

STATE OF ILLINOIS
DEPARTMENT OF TRANSPORTATION

BORING LOGS – PIER 11
STRUCTURE NO. 060–0350 (EB)

SHEET 260 OF 292 SHEETS

F.AJ RTE.	SECTION	COUNTY	TOTAL SHEETS	SHEET NO.
270	60B-1	MADISON	860	460
		CONTRACT NO. 76J90		
		ILLINOIS FED. AID PROJECT		

Illinois Department of Transportation
Division of Highways
sci engineering inc

SOIL BORING LOG

Page 1 of 2

Date 10/15/20

ROUTE FAI 270 DESCRIPTION I-270 over the Mississippi River LOGGED BY SCI

SECTION 60B-1 LOCATION Pier 12, SEC. 26, TWP. 4N, RNG. 10W
Lat 38.764146 Long -90.172140

COUNTY Madison DRILLING METHOD HSA, NQ Casing HAMMER TYPE Automatic

STRUCT. NO. 060-0350 (EB)
Station 806+89.23

BORING NO. BB-26
Station 1803+72.15
Offset 2.9 ft L (EB)
Ground Surface Elev. 388.6 ft

Surface Water Elev. 388.6 ft
Stream Bed Elev. ft

Groundwater Elev.:
First Encounter ft
Upon Completion ft
After Hrs. ft

Description	Elev.	DEPTH (ft)	BLOWS (/6")	UCS Qu (tsf)	MOIST (%)
River surface elevation at 388.6 (+/-) feet. Surface elevation at river bottom = 367.8 (+/-) feet. Sampling began 20.8 feet below water level.		-5, -10, -15, -20			
Sand: Brown, fine to coarse grained, very loose, A-3.	367.8	-25, -30, -35, -40	1 1 2	NC	--
Weathered Limestone.	364.7 / 364.3				
Borehole continued with rock coring.					

The Unconfined Compressive Strength (UCS) Failure Mode is indicated by (B-Bulge, S-Shear, P-Penetrometer)
AASHTO Classifications are based on visual classifications unless otherwise noted BBS, form 137 (Rev. 8-99)

Illinois Department of Transportation
Division of Highways
sci engineering inc

ROCK CORE LOG

Page 1 of 2

Date 10/15/20

ROUTE FAI 270 DESCRIPTION I-270 over the Mississippi River LOGGED BY SCI

SECTION 60B-1 LOCATION Pier 12, SEC. 26, TWP. 4N, RNG. 10W
Lat 38.764146 Long -90.172140

COUNTY Madison CORING METHOD Conventional

STRUCT. NO. 060-0350 (EB)
Station 806+89.23

CORING BARREL TYPE & SIZE Solid Barrel NQ
Core Diameter 1.86 in
Top of Rock Elev. 364.7 ft
Begin Core Elev. 364.3 ft

BORING NO. BB-26
Station 1803+72.15
Offset 2.9 ft L (EB)
Ground Surface Elev. 388.6 ft

Description	Elev.	DEPTH (ft)	CORE (#)	RECOVERY (%)	R.Q.D. (%)	CORE TIME (min/ft)	STRENGTH (tsf)	MOISTURE (%)
Sandstone: Gray, with brown bands, fine to coarse grained, hard, banded to thinly bedded, slightly weathered, dense.	364.3	-25	1	99	40	3.7		
Limestone: Light gray, hard, finely crystalline, thinly bedded, slightly weathered, dense.	360.8							
With greenish-gray, shaley clay	359.7							
Argillaceous Limestone: Light gray, moderately hard, aphanitic, thinly bedded, slightly weathered, dense, with shale partings.		-30						
Depth 31.6 feet. Dry Density: 161.1 pcf.							794.9	0.8
Depth 33.3 feet. Dry Density: 166.8 pcf.		-35					957.8	0.2
Limestone: Light gray, hard, very finely crystalline, medium to thickly bedded, slightly weathered, dense, with shale partings.	354.3		2	99	96	2.9		
Depth 35.5 feet. Dry Density: 165.0 pcf.		-40					1030.6	0.1
Depth 41.7 feet. Dry Density: 164.8 pcf.							939.8	0.1
	344.3							

Color pictures of the cores Yes
Cores will be stored for examination until completion
The "Strength" column represents the uniaxial compressive strength of the core sample (ASTM D-2938)
BBS, form 138 (Rev. 8-99)

Illinois Department of Transportation
Division of Highways
sci engineering inc

ROCK CORE LOG

Page 2 of 2

Date 10/15/20

ROUTE FAI 270 DESCRIPTION I-270 over the Mississippi River LOGGED BY SCI

SECTION 60B-1 LOCATION Pier 12, SEC. 26, TWP. 4N, RNG. 10W
Lat 38.764146 Long -90.172140

COUNTY Madison CORING METHOD Conventional

STRUCT. NO. 060-0350 (EB)
Station 806+89.23

CORING BARREL TYPE & SIZE Solid Barrel NQ
Core Diameter 1.86 in
Top of Rock Elev. 364.7 ft
Begin Core Elev. 364.3 ft

BORING NO. BB-26
Station 1803+72.15
Offset 2.9 ft L (EB)
Ground Surface Elev. 388.6 ft

Description	Elev.	DEPTH (ft)	CORE (#)	RECOVERY (%)	R.Q.D. (%)	CORE TIME (min/ft)	STRENGTH (tsf)	MOISTURE (%)
Limestone: Light gray, hard to very hard, very finely crystalline to aphanitic, thickly bedded, fresh, dense, some stylites.		-45	3	100	100	3.5		
Depth 44.6 feet. Dry Density: 166.6 pcf.							597.9	0.1
Depth 46.0 feet. Dry Density: 164.9 pcf.							813.4	0.1
2 inch vertical joint.		-50						
3 inch vertical joint.								
	334.3							
Boring terminated at 54.3 feet.		-55, -60						

Color pictures of the cores Yes
Cores will be stored for examination until completion
The "Strength" column represents the uniaxial compressive strength of the core sample (ASTM D-2938)
BBS, form 138 (Rev. 8-99)

Illinois Department of Transportation
Division of Highways
sci engineering inc

SOIL BORING LOG

Page 1 of 2

Date 10/21/20

ROUTE FAI 270 DESCRIPTION I-270 over the Mississippi River LOGGED BY SCI

SECTION 60B-1 LOCATION Pier 13, SEC. 26, TWP. 4N, RNG. 10W
Lat 38.763906 Long -90.171306

COUNTY Madison DRILLING METHOD HSA, NQ Casing HAMMER TYPE Automatic

STRUCT. NO. 060-0350 (EB)
Station 806+89.23

BORING NO. BB-28
Station 1806+25.33
Offset 6.9 ft R (EB)
Ground Surface Elev. 390.3 ft

Surface Water Elev. 390.3 ft
Stream Bed Elev. ft

Groundwater Elev.:
First Encounter ft
Upon Completion ft
After Hrs. ft

Description	Elev.	DEPTH (ft)	BLOWS (/6")	UCS Qu (tsf)	MOIST (%)
River surface elevation at 390.3 (+/-) feet. Surface elevation at river bottom = 363.8 (+/-) feet. Sampling began 26.5 feet below water level.		-5			
		-10			
		-15			
	370.3	-20			
		-25			
	363.8				
Sand: Gray, fine to coarse grained, very loose to loose, A-3.		-30	1 WOH 2	NC	--
		-35	3 2 3	NC	--
		-40	4 5 6	NC	--

The Unconfined Compressive Strength (UCS) Failure Mode is indicated by (B-Bulge, S-Shear, P-Penetrometer)
AASHTO Classifications are based on visual classifications unless otherwise noted BBS, form 137 (Rev. 8-99)

Illinois Department of Transportation
Division of Highways
sci engineering inc

SOIL BORING LOG

Page 2 of 2

Date 10/21/20

ROUTE FAI 270 DESCRIPTION I-270 over the Mississippi River LOGGED BY SCI

SECTION 60B-1 LOCATION Pier 13, SEC. 26, TWP. 4N, RNG. 10W
Lat 38.763906 Long -90.171306

COUNTY Madison DRILLING METHOD HSA, NQ Casing HAMMER TYPE Automatic

STRUCT. NO. 060-0350 (EB)
Station 806+89.23

BORING NO. BB-28
Station 1806+25.33
Offset 6.9 ft R (EB)
Ground Surface Elev. 390.3 ft

Surface Water Elev. 390.3 ft
Stream Bed Elev. ft

Groundwater Elev.:
First Encounter ft
Upon Completion ft
After Hrs. ft

Description	Elev.	DEPTH (ft)	BLOWS (/6")	UCS Qu (tsf)	MOIST (%)
Sand: Gray, fine to coarse grained, very loose to loose, A-3. *(continued)*		-45			
	347.3		2 5 50/5"	NC	--
Weathered Limestone.	346.7				
Borehole continued with rock coring.		-50			
		-55			
		-60			

The Unconfined Compressive Strength (UCS) Failure Mode is indicated by (B-Bulge, S-Shear, P-Penetrometer)
AASHTO Classifications are based on visual classifications unless otherwise noted BBS, form 137 (Rev. 8-99)

Illinois Department of Transportation
Division of Highways
sci engineering inc

ROCK CORE LOG

Page 1 of 2

Date 10/21/20

ROUTE FAI 270 DESCRIPTION I-270 over the Mississippi River LOGGED BY SCI

SECTION 60B-1 LOCATION Pier 13, SEC. 26, TWP. 4N, RNG. 10W
Lat 38.763906 Long -90.171306

COUNTY Madison CORING METHOD Conventional

STRUCT. NO. 060-0350 (EB)
Station 806+89.23

CORING BARREL TYPE & SIZE Solid Barrel NQ
Core Diameter 1.86 in
Top of Rock Elev. 347.3 ft
Begin Core Elev. 346.7 ft

BORING NO. BB-28
Station 1806+25.33
Offset 6.9 ft R (EB)
Ground Surface Elev. 390.3 ft

Description	Elev.	DEPTH (ft)	CORE (#)	RECOVERY (%)	R.Q.D. (%)	CORE TIME (min/ft)	STRENGTH (tsf)	MOISTURE (%)
Limestone: Light gray, hard, very finely crystalline, medium to thickly bedded, slightly weathered, dense.	346.7		1	99	88	3.2		
		-45						
Depth 46.1 feet. Dry Density: 166.0 pcf.							1097.1	0.1
		-50						
Depth 50.5 feet. Dry Density: 166.2 pcf.							1404.0	0.1
Aphanitic, trace shaley limestone.			2	99	94	3.2		
		-55						
Depth 56.0 feet. Dry Density: 165.5 pcf.							1255.4	0.2
		-60						
Depth 61.3 feet. Dry Density: 166.9 pcf.							819.3	0.1
	326.7							

Color pictures of the cores Yes
Cores will be stored for examination until completion
The "Strength" column represents the uniaxial compressive strength of the core sample (ASTM D-2938)
BBS, form 138 (Rev. 8-99)

Illinois Department of Transportation
Division of Highways
sci engineering inc

ROCK CORE LOG

Date 10/21/20

ROUTE FAI 270 DESCRIPTION I-270 over the Mississippi River LOGGED BY SCI

SECTION 60B-1 LOCATION Pier 13, SEC. 26, TWP. 4N, RNG. 10W
Lat 38.763906 Long -90.171306

COUNTY Madison CORING METHOD Conventional

STRUCT. NO. 060-0350 (EB) CORING BARREL TYPE & SIZE Solid Barrel NQ
Station 806+89.23

Core Diameter 1.86 in
Top of Rock Elev. 347.3 ft
Begin Core Elev. 346.7 ft

BORING NO. BB-28
Station 1806+25.33
Offset 6.9 ft R (EB)
Ground Surface Elev. 390.3 ft

	DEPTH (ft)	CORE (#)	RECOVERY (%)	R.Q.D. (%)	CORE TIME (min/ft)	STRENGTH (tsf)	MOISTURE (%)
Shaley Limestone: Gray, aphanitic, medium to thickly bedded, slightly weathered, dense.	-65	3	100	97	3.2		
Depth 65.2 feet. Dry Density: 166.7 pcf.						1012.5	0.1
	-70						
Depth 71.0 feet. Dry Density: 166.6 pcf.						1041.7	0.1
	316.7						
Boring terminated at 73.6 feet.	-75						
	-80						

Color pictures of the cores Yes
Cores will be stored for examination until completion
The "Strength" column represents the uniaxial compressive strength of the core sample (ASTM D-2938)

BBS, form 138 (Rev. 8-99)

Illinois Department of Transportation
Division of Highways
sci engineering inc

SOIL BORING LOG

Page 1 of 2

Date 10/22/20

ROUTE FAI 270 DESCRIPTION I-270 over the Mississippi River LOGGED BY SCI

SECTION 60B-1 LOCATION Pier 14, SEC. 26, TWP. 4N, RNG. 10W
Lat 38.763645 Long -90.170586

COUNTY Madison DRILLING METHOD HSA, NQ Casing HAMMER TYPE Automatic

STRUCT. NO. 060-0350 (EB)
Station 806+89.23

BORING NO. BB-30
Station 1808+52.52
Offset 27.6 ft R (EB)
Ground Surface Elev. 389.9 ft

Surface Water Elev. 389.9 ft
Stream Bed Elev. ft

Groundwater Elev.:
First Encounter ft
Upon Completion ft
After Hrs. ft

Description	Elev.	DEPTH (ft)	BLOWS (/6")	UCS Qu (tsf)	MOIST (%)
River surface elevation at 389.9 (+/-) feet. Surface elevation at river bottom = 365.0 (+/-) feet. Sampling began 24.9 feet below water level.		-5, -10, -15, -20			
Sand: Brown, fine to coarse grained, very loose, moist, A-3.	365.0	-25, -30			
Sand: White and tan, fine to coarse grained, with gravel, medium dense, A-1.	356.9	-35	WOH WOH 2		
Sand: fine to coarse grained, medium dense, A-1.	353.4	-40	1 2 3		

The Unconfined Compressive Strength (UCS) Failure Mode is indicated by (B-Bulge, S-Shear, P-Penetrometer)
AASHTO Classifications are based on visual classifications unless otherwise noted BBS, form 137 (Rev. 8-99)

Illinois Department of Transportation
Division of Highways
sci engineering inc

SOIL BORING LOG

Page 2 of 2

Date 10/22/20

ROUTE FAI 270 DESCRIPTION I-270 over the Mississippi River LOGGED BY SCI

SECTION 60B-1 LOCATION Pier 14, SEC. 26, TWP. 4N, RNG. 10W
Lat 38.763645 Long -90.170586

COUNTY Madison DRILLING METHOD HSA, NQ Casing HAMMER TYPE Automatic

STRUCT. NO. 060-0350 (EB)
Station 806+89.23

BORING NO. BB-30
Station 1808+52.52
Offset 27.6 ft R (EB)
Ground Surface Elev. 389.9 ft

Surface Water Elev. 389.9 ft
Stream Bed Elev. ft

Groundwater Elev.:
First Encounter ft
Upon Completion ft
After Hrs. ft

Description	Elev.	DEPTH (ft)	BLOWS (/6")	UCS Qu (tsf)	MOIST (%)
Sand: fine to coarse grained, medium dense, A-1. *(continued)*		-45, -50			
Borehole continued with rock coring.	342.4	-55, -60			

The Unconfined Compressive Strength (UCS) Failure Mode is indicated by (B-Bulge, S-Shear, P-Penetrometer)
AASHTO Classifications are based on visual classifications unless otherwise noted BBS, form 137 (Rev. 8-99)

Illinois Department of Transportation
Division of Highways
sci engineering inc

ROCK CORE LOG

Page 1 of 2

Date 10/22/20

ROUTE FAI 270 DESCRIPTION I-270 over the Mississippi River LOGGED BY SCI

SECTION 60B-1 LOCATION Pier 14, SEC. 26, TWP. 4N, RNG. 10W
Lat 38.763645 Long -90.170586

COUNTY Madison CORING METHOD Conventional

STRUCT. NO. 060-0350 (EB)
Station 806+89.23

CORING BARREL TYPE & SIZE Solid Barrel NQ
Core Diameter 1.86 in
Top of Rock Elev. 342.7 ft
Begin Core Elev. 342.4 ft

BORING NO. BB-30
Station 1808+52.52
Offset 27.6 ft R (EB)
Ground Surface Elev. 389.9 ft

Description	Elev.	DEPTH (ft)	CORE (#)	RECOVERY (%)	R.Q.D. (%)	CORE TIME (min/ft)	STRENGTH (tsf)	MOISTURE (%)
Limestone: Light gray, moderately hard to hard, very finely crystalline, medium bedding, slightly weathered, dense.	342.4	-50	1	95	89	3.5		
Depth 50.7 feet. Dry Density: 168.9 pcf.							692.4	0.1
Depth 54.7 feet. Dry Density: 165.7 pcf.	334.8	-55					732.4	0.4
Shale: Greenish-gray.	333.9							
Shaley Clay: Greenish-gray.	333.8							
Limestone: Light gray, moderately hard to hard, very finely crystalline, medium bedding, slightly weathered, dense. 1 inch vertical fracture.			2	100	92	3.3		
Depth 58.9 feet. Dry Density: 166.9 pcf. With shale partings.		-60					907.7	0.1
Depth 63.9 feet. Dry Density: 165.8 pcf.	322.4	-65					867.1	0.2

Color pictures of the cores Yes
Cores will be stored for examination until completion
The "Strength" column represents the uniaxial compressive strength of the core sample (ASTM D-2938)
BBS, form 138 (Rev. 8-99)

Illinois Department of Transportation
Division of Highways
sci engineering inc

ROCK CORE LOG

Date 10/22/20

ROUTE FAI 270 DESCRIPTION I-270 over the Mississippi River LOGGED BY SCI

SECTION 60B-1 LOCATION Pier 14, SEC. 26, TWP. 4N, RNG. 10W
Lat 38.763645 Long -90.170586

COUNTY Madison CORING METHOD Conventional

STRUCT. NO. 060-0350 (EB)
Station 806+89.23

CORING BARREL TYPE & SIZE Solid Barrel NQ

Core Diameter 1.86 in
Top of Rock Elev. 342.7 ft
Begin Core Elev. 342.4 ft

BORING NO. BB-30
Station 1808+52.52
Offset 27.6 ft R (EB)
Ground Surface Elev. 389.9 ft

	DEPTH (ft)	CORE (#)	RECOVERY (%)	R.Q.D. (%)	CORE TIME (min/ft)	STRENGTH (tsf)	MOISTURE (%)
Argillaceous Limestone: Light gray, hard, very finely crystalline, thickly bedded, dense, trace styolites. *Depth 67.7 feet. Dry Density: 166.8 pcf.*		3	100	97	3.3	545.6	0.1
	-70						
Moderately hard. With shale partings.							
Hard. *Depth 74.1 feet. Dry Density: 167.3 pcf.*						585.0	0.1
	-75						
	312.4						
Boring terminated at 77.5 feet.							
	-80						
	-85						

Color pictures of the cores Yes
Cores will be stored for examination until completion
The "Strength" column represents the uniaxial compressive strength of the core sample (ASTM D-2938)

BBS, form 138 (Rev. 8-99)

Illinois Department of Transportation
Division of Highways
sci engineering inc

SOIL BORING LOG

Page 1 of 2

Date 11/05/20

ROUTE FAI 270 DESCRIPTION I-270 over the Mississippi River LOGGED BY SCI

SECTION 60B-1 LOCATION Pier 15, SEC. 26, TWP. 4N, RNG. 10W
Lat 38.76347218 Long -90.16979886

COUNTY Madison DRILLING METHOD HSA, NQ Casing HAMMER TYPE Automatic

STRUCT. NO. 060-0350 (EB)
Station 806+89.23

BORING NO. BB-34
Station 1810+85.36
Offset 26.6 ft R (EB)
Ground Surface Elev. 391.3 ft

Surface Water Elev. 391.3 ft
Stream Bed Elev. ft

Groundwater Elev.:
First Encounter ft
Upon Completion ft
After Hrs. ft

Description	Elev.	DEPTH (ft)	BLOWS (/6")	UCS Qu (tsf)	MOIST (%)
River surface elevation at 391.3 (+/-) feet. Surface elevation at river bottom = 369.2 (+/-) feet. Sampling began 22.1 feet below water level.					
		-5			
		-10			
		-15			
	371.3	-20			
	369.2	-25			
Sand: Brown, fine to coarse grained, medium dense, A-3.			2 6 7	NC	--
	364.1	-30			
Sand: Brown, fine to coarse grained, very loose, A-1.			1 1 1	NC	--
		-35			
			1 1 2	NC	--
Medium dense.			4 6 6	NC	--
	351.3	-40			

The Unconfined Compressive Strength (UCS) Failure Mode is indicated by (B-Bulge, S-Shear, P-Penetrometer)
AASHTO Classifications are based on visual classifications unless otherwise noted BBS, form 137 (Rev. 8-99)

Illinois Department of Transportation
Division of Highways
sci engineering inc

SOIL BORING LOG

Page 2 of 2

Date 11/05/20

ROUTE FAI 270 DESCRIPTION I-270 over the Mississippi River LOGGED BY SCI

SECTION 60B-1 LOCATION Pier 15, SEC. 26, TWP. 4N, RNG. 10W
Lat 38.76347218 Long -90.16979886

COUNTY Madison DRILLING METHOD HSA, NQ Casing HAMMER TYPE Automatic

STRUCT. NO. 060-0350 (EB)
Station 806+89.23

BORING NO. BB-34
Station 1810+85.36
Offset 26.6 ft R (EB)
Ground Surface Elev. 391.3 ft

Surface Water Elev. 391.3 ft
Stream Bed Elev. ft

Groundwater Elev.:
First Encounter ft
Upon Completion ft
After Hrs. ft

Description	Elev.	DEPTH (ft)	BLOWS (/6")	UCS Qu (tsf)	MOIST (%)
Sand: Brown, fine to coarse grained, medium dense, A-1. *(continued)*					
			1 9 13	NC	--
		-45			
No recovery.			9 13 16	NC	--
		-50			
	340.7				
Borehole continued with rock coring.					
		-55			
		-60			

The Unconfined Compressive Strength (UCS) Failure Mode is indicated by (B-Bulge, S-Shear, P-Penetrometer)
AASHTO Classifications are based on visual classifications unless otherwise noted BBS, form 137 (Rev. 8-99)

Illinois Department of Transportation
Division of Highways
sci engineering inc

ROCK CORE LOG

Page 1 of 2

Date 11/05/20

ROUTE FAI 270 DESCRIPTION I-270 over the Mississippi River LOGGED BY SCI

SECTION 60B-1 LOCATION Pier 15, SEC. 26, TWP. 4N, RNG. 10W
Lat 38.76347218 Long -90.16979886

COUNTY Madison CORING METHOD Conventional

STRUCT. NO. 060-0350 (EB)
Station 806+89.23

CORING BARREL TYPE & SIZE Solid Barrel NQ
Core Diameter 1.86 in
Top of Rock Elev. 340.7 ft
Begin Core Elev. 340.6 ft

BORING NO. BB-34
Station 1810+85.36
Offset 26.6 ft R (EB)
Ground Surface Elev. 391.3 ft

Description	Elev.	DEPTH (ft)	CORE (#)	RECOVERY (%)	R.Q.D. (%)	CORE TIME (min/ft)	STRENGTH (tsf)	MOISTURE (%)
Limestone: Gray, moderately hard, very finely crystalline, banded to thinly bedded, slightly weathered, dense. *(continued)*			1	95	88	7		
Gravel bed at 52.0-52.5 feet. Medium to thickly bedded. *Depth 52.9', Dry Density: 166.3 pcf.*							1062.8	0.1
		-55						
Depth 59.2', Dry Density: 166.3 pcf.							608.6	0.1
		-60						
			2	99	97	6		
Depth 63.8', Dry Density: 166.2 pcf.							936.6	0.4
		-65						
Depth 69.8', Dry Density: 163.7 pcf.		-70					571.3	0.5
	320.6							

Color pictures of the cores Yes
Cores will be stored for examination until completion
The "Strength" column represents the uniaxial compressive strength of the core sample (ASTM D-2938)
BBS, form 138 (Rev. 8-99)

Illinois Department of Transportation
Division of Highways
sci engineering inc

ROCK CORE LOG

Date 11/05/20

ROUTE FAI 270 DESCRIPTION I-270 over the Mississippi River LOGGED BY SCI

SECTION 60B-1 LOCATION Pier 15, SEC. 26, TWP. 4N, RNG. 10W
Lat 38.76347218 Long -90.16979886

COUNTY Madison CORING METHOD Conventional

STRUCT. NO. 060-0350 (EB)
Station 806+89.23

CORING BARREL TYPE & SIZE Solid Barrel NQ

Core Diameter 1.86 in
Top of Rock Elev. 340.7 ft
Begin Core Elev. 340.6 ft

BORING NO. BB-34
Station 1810+85.36
Offset 26.6 ft R (EB)
Ground Surface Elev. 391.3 ft

	DEPTH (ft)	CORE (#)	RECOVERY (%)	R.Q.D. (%)	CORE TIME (min/ft)	STRENGTH (tsf)	MOISTURE (%)
Limestone: Gray, moderately hard, very finely crystalline, medium to thickly bedded, slightly weathered, dense. *(continued)*		3	98	98	5		
Brecciated at 73.0-74.5 feet. *Depth 73.2', Dry Density: 160.0 pcf.*						274.4	0.8
	-75						
Depth 76.0', Dry Density: 164.5 pcf.						923.4	0.3
	-80						
	310.6						
Boring terminated at 80.7 feet.							
	-85						
	-90						

Color pictures of the cores Yes
Cores will be stored for examination until completion
The "Strength" column represents the uniaxial compressive strength of the core sample (ASTM D-2938)

BBS, form 138 (Rev. 8-99)

Illinois Department of Transportation
Division of Highways
sci engineering inc

SOIL BORING LOG

Page 1 of 1

Date 04/12/21

ROUTE FAI 270 DESCRIPTION I-270 over the Mississippi River LOGGED BY SCI

SECTION 60B-1 LOCATION Pier 16, SEC. 26, TWP. 4N, RNG. 10W
Lat 38.763280 Long -90.168989

COUNTY Madison DRILLING METHOD HSA, NQ Casing HAMMER TYPE Automatic

STRUCT. NO. 060-0350 (EB)
Station 806+89.23

BORING NO. BB-36
Station 1813+23.34
Offset 28.8 ft R (EB)
Ground Surface Elev. 414.0 ft

Surface Water Elev. 406.3 ft
Stream Bed Elev. ft

Groundwater Elev.:
First Encounter ft
Upon Completion ft
After Hrs. ft

Description	Elev.	DEPTH (ft)	BLOWS (/6")	UCS Qu (tsf)	MOIST (%)
River surface elevation at 414.0 (+/-) feet. Surface elevation at river bottom = 376.8 (+/-) feet.					
		-5			
		-10			
		-15			
	394.0	-20			
		-25			
		-30			
		-35			
Samples not obtained of river deposits (sediment and sand).	376.8				
	374.0	-40			

The Unconfined Compressive Strength (UCS) Failure Mode is indicated by (B-Bulge, S-Shear, P-Penetrometer)
AASHTO Classifications are based on visual classifications unless otherwise noted BBS, form 137 (Rev. 8-99)

Illinois Department of Transportation
Division of Highways
sci engineering inc

SOIL BORING LOG

Page 2 of 1

Date 04/12/21

ROUTE FAI 270 DESCRIPTION I-270 over the Mississippi River LOGGED BY SCI

SECTION 60B-1 LOCATION Pier 16, SEC. 26, TWP. 4N, RNG. 10W
Lat 38.763280 Long -90.168989

COUNTY Madison DRILLING METHOD HSA, NQ Casing HAMMER TYPE Automatic

STRUCT. NO. 060-0350 (EB)
Station 806+89.23

BORING NO. BB-36
Station 1813+23.34
Offset 28.8 ft R (EB)
Ground Surface Elev. 414.0 ft

Surface Water Elev. 406.3 ft
Stream Bed Elev. ft

Groundwater Elev.:
First Encounter ft
Upon Completion ft
After Hrs. ft

Description	Elev.	DEPTH (ft)	BLOWS (/6")	UCS Qu (tsf)	MOIST (%)
			50/0"	NC	--
		-45			
Borehole continued with rock coring.	349.0	-65			
		-50			
		-55			
		-60			
		-70			
		-75			
		-80			

The Unconfined Compressive Strength (UCS) Failure Mode is indicated by (B-Bulge, S-Shear, P-Penetrometer)
AASHTO Classifications are based on visual classifications unless otherwise noted BBS, form 137 (Rev. 8-99)

Illinois Department of Transportation
Division of Highways
sci engineering inc

ROCK CORE LOG

Page 1 of 1

Date 04/12/21

ROUTE FAI 270 DESCRIPTION I-270 over the Mississippi River LOGGED BY SCI

SECTION 60B-1 LOCATION Pier 16, SEC. 26, TWP. 4N, RNG. 10W
Lat 38.763280 Long -90.168989

COUNTY Madison CORING METHOD Conventional

STRUCT. NO. 060-0350 (EB)
Station 806+89.23

CORING BARREL TYPE & SIZE Solid Barrel NQ
Core Diameter 1.86 in
Top of Rock Elev. 349.0 ft
Begin Core Elev. 349.0 ft

BORING NO. BB-36
Station 1813+23.34
Offset 28.8 ft R (EB)
Ground Surface Elev. 414.0 ft

Description	Elev.	DEPTH (ft)	CORE (#)	RECOVERY (%)	R.Q.D. (%)	CORE TIME (min/ft)	STRENGTH (tsf)	MOISTURE (%)
Limestone: Light gray, hard to very hard, very finely crystalline, banded to thinly bedded, slightly weathered, dense, with clayey shale deposits.	349.0		1	100	66	4.2		
		-70						
Depth 71.3', Dry Density: 168.6 pcf.							880.7	0.1
With vertical fractures possibly caused by coring process.	340.5							
Boring terminated at 73.5 feet.		-75						
		-80						
		-85						

Color pictures of the cores Yes
Cores will be stored for examination until completion
The "Strength" column represents the uniaxial compressive strength of the core sample (ASTM D-2938)
BBS, form 138 (Rev. 8-99)

Illinois Department of Transportation
Division of Highways
sci engineering inc

SOIL BORING LOG

Page 1 of 2

Date 04/21/21

ROUTE FAI 270 DESCRIPTION I-270 over the Mississippi River LOGGED BY SCI

SECTION 60B-1 LOCATION Pier 16, SEC. 26, TWP. 4N, RNG. 10W
Lat 38.763356 Long -90.169075

COUNTY Madison DRILLING METHOD HSA, NQ Casing HAMMER TYPE Automatic

STRUCT. NO. 060-0350 (EB)
Station 806+89.23

BORING NO. BB-36a
Station 1813+23.34
Offset 28.8 ft R (EB)
Ground Surface Elev. 404.2 ft

Surface Water Elev. 396.8 ft
Stream Bed Elev. ft

Groundwater Elev.:
First Encounter ft
Upon Completion ft
After Hrs. ft

	DEPTH (ft)	BLOWS (/6")	UCS Qu (tsf)	MOIST (%)
River surface elevation at 404.2 (+/-) feet. Surface elevation at river bottom = 374.3 (+/-) feet.	-5			
	-10			
	-15			
	384.2 -20			

	DEPTH (ft)	BLOWS (/6")	UCS Qu (tsf)	MOIST (%)
	-25			
377.3 No sampling from the mudline to top of bedrock. See BB-36 for sampled materials.	-30			
	-35			
	364.2 -40			

The Unconfined Compressive Strength (UCS) Failure Mode is indicated by (B-Bulge, S-Shear, P-Penetrometer)
AASHTO Classifications are based on visual classifications unless otherwise noted BBS, form 137 (Rev. 8-99)

Illinois Department of Transportation
Division of Highways
sci engineering inc

SOIL BORING LOG

Page 2 of 2

Date 04/21/21

ROUTE FAI 270 DESCRIPTION I-270 over the Mississippi River LOGGED BY SCI

SECTION 60B-1 LOCATION Pier 16, SEC. 26, TWP. 4N, RNG. 10W
Lat 38.763356 Long -90.169075

COUNTY Madison DRILLING METHOD HSA, NQ Casing HAMMER TYPE Automatic

STRUCT. NO. 060-0350 (EB)
Station 806+89.23

BORING NO. BB-36a
Station 1813+23.34
Offset 28.8 ft R (EB)
Ground Surface Elev. 404.2 ft

Surface Water Elev. 396.8 ft
Stream Bed Elev. ft

Groundwater Elev.:
First Encounter ft
Upon Completion ft
After Hrs. ft

	DEPTH (ft)	BLOWS (/6")	UCS Qu (tsf)	MOIST (%)
	-45			
	-50			
	-55			
347.6 Borehole continued with rock coring.	-60			

The Unconfined Compressive Strength (UCS) Failure Mode is indicated by (B-Bulge, S-Shear, P-Penetrometer)
AASHTO Classifications are based on visual classifications unless otherwise noted BBS, form 137 (Rev. 8-99)

Illinois Department of Transportation
Division of Highways
sci engineering inc

ROCK CORE LOG

Page 1 of 2

Date 04/21/21

ROUTE FAI 270 DESCRIPTION I-270 over the Mississippi River LOGGED BY SCI

SECTION 60B-1 LOCATION Pier 16, SEC. 26, TWP. 4N, RNG. 10W
Lat 38.763356 Long -90.169075

COUNTY Madison CORING METHOD Conventional

STRUCT. NO. 060-0350 (EB)
Station 806+89.23

CORING BARREL TYPE & SIZE Solid Barrel NQ
Core Diameter 2.06 in
Top of Rock Elev. 347.6 ft
Begin Core Elev. 347.6 ft

BORING NO. BB-36a
Station 1813+23.34
Offset 28.8 ft R (EB)
Ground Surface Elev. 404.2 ft

	DEPTH (ft)	CORE (#)	RECOVERY (%)	R.Q.D. (%)	CORE TIME (min/ft)	STRENGTH (tsf)	MOISTURE (%)
Limestone: Light gray, hard to very hard, aphanitic, thin to thick bedding, slightly weathered, dense.	347.6	1	97	63	4.1		
Interbedded with clayey shale from about 57.8 to 58.6 feet. *Depth 57.8', Dry Density: 167.2 pcf.*						697.3	0.1
	-60						
Massive bedded.		2	100	100	3.5		
	-65						
Depth 65.9', Dry Density: 168.0 pcf.						936.9	0.1
		3	99	98	3.9		
	-70						
Depth 70.8', Dry Density: 166.5 pcf.						652.5	0.3
	-75						
Depth 76.1', Dry Density: 163.7 pcf.						564.3	0.1

Color pictures of the cores Yes
Cores will be stored for examination until completion
The "Strength" column represents the uniaxial compressive strength of the core sample (ASTM D-2938)
BBS, form 138 (Rev. 8-99)

Illinois Department of Transportation
Division of Highways
sci engineering inc

ROCK CORE LOG

Date 04/21/21

ROUTE FAI 270 DESCRIPTION I-270 over the Mississippi River LOGGED BY SCI

SECTION 60B-1 LOCATION Pier 16, SEC. 26, TWP. 4N, RNG. 10W
Lat 38.763356 Long -90.169075

COUNTY Madison CORING METHOD Conventional

STRUCT. NO. 060-0350 (EB) CORING BARREL TYPE & SIZE Solid Barrel NQ
Station 806+89.23

Core Diameter 2.06 in
Top of Rock Elev. 347.6 ft
Begin Core Elev. 347.6 ft

BORING NO. BB-36a
Station 1813+23.34
Offset 28.8 ft R (EB)
Ground Surface Elev. 404.2 ft

	DEPTH (ft)	CORE (#)	RECOVERY (%)	R.Q.D. (%)	CORE TIME (min/ft)	STRENGTH (tsf)	MOISTURE (%)
Limestone: Light gray, hard to very hard, aphanitic, thin to thick bedding, slightly weathered, dense. *(continued)* Massive to thinly bedded.		4	100	84	3.9		
Depth 78.8', Dry Density: 165.5 pcf.						604.3	0.3
	-80						
Depth 84.2', Dry Density: 167.1 pcf.						555.3	0.1
	-85						
	317.6						
Boring terminated at 86.6 feet.							
	-90						
	-95						

Color pictures of the cores Yes
Cores will be stored for examination until completion
The "Strength" column represents the uniaxial compressive strength of the core sample (ASTM D-2938)

BBS, form 138 (Rev. 8-99)

Illinois Department of Transportation
Division of Highways
sci engineering inc

SOIL BORING LOG

Page 1 of 2

Date 4/06-07/21

ROUTE FAI 270 DESCRIPTION I-270 over the Mississippi River LOGGED BY SCI

SECTION 60B-1 LOCATION Pier 17, SEC. 25, TWP. 4N, RNG. 10W
Lat 38.763122 Long -90.168363

COUNTY Madison DRILLING METHOD HSA, NQ Casing HAMMER TYPE Automatic

STRUCT. NO. 060-0350 (EB)
Station 806+89.23

BORING NO. BB-38
Station 1815+17.74
Offset 32.8 ft R (EB)
Ground Surface Elev. 406.0 ft

Surface Water Elev. 398.6 ft
Stream Bed Elev. ft

Groundwater Elev.:
First Encounter ft
Upon Completion ft
After Hrs. ft

River surface elevation at 406.0 (+/-) feet. Surface elevation at river bottom = 391.6 (+/-) feet. Sampling began 16.7 feet below water level.

Clay Loam: Gray, very soft, very moist.
A-7.

391.6

Silt: Gray, very, soft, very moist.
A-4.

389.0

386.5

Depth (ft)	Blows (/6")	UCS Qu (tsf)	Moist (%)
	1 1 1	NC	--
-5			
-10			
-15			
-20			

Sand: Gray, fine to coarse grained, very loose to medium dense, very moist to wet.
A-3. *(continued)*
With clay lumps.

Trace fine gravel.

Fine grained and no gravel.

Depth (ft)	Blows (/6")	UCS Qu (tsf)	Moist (%)
	1 1 1	NC	--
-25			
	3 8 9	NC	--
-30			
	4 8 14	NC	--
-35			
	4 2 4	NC	--
-40			

The Unconfined Compressive Strength (UCS) Failure Mode is indicated by (B-Bulge, S-Shear, P-Penetrometer)
AASHTO Classifications are based on visual classifications unless otherwise noted BBS, form 137 (Rev. 8-99)

Illinois Department of Transportation
Division of Highways
sci engineering inc

SOIL BORING LOG

Page 2 of 2

Date 4/06-07/21

ROUTE FAI 270 DESCRIPTION I-270 over the Mississippi River LOGGED BY SCI

SECTION 60B-1 LOCATION Pier 17, SEC. 25, TWP. 4N, RNG. 10W
Lat 38.763122 Long -90.168363

COUNTY Madison DRILLING METHOD HSA, NQ Casing HAMMER TYPE Automatic

STRUCT. NO. 060-0350 (EB)
Station 806+89.23

BORING NO. BB-38
Station 1815+17.74
Offset 32.8 ft R (EB)
Ground Surface Elev. 406.0 ft

Surface Water Elev. 398.6 ft
Stream Bed Elev. ft

Groundwater Elev.:
First Encounter ft
Upon Completion ft
After Hrs. ft

Sand: Gray, fine to coarse grained, very loose to medium dense, very moist to wet.
A-3. *(continued)*
Trace coarse sand and fine gravel.

361.0

Sand: Gray, fine to coarse grained, medium dense, trace fine gravel, very moist to wet.
A-1.

332.8

Sand: Gray, fine grained, medium dense, very moist to wet.
A-3.

347.9

Limestone
Boring abandoned due to outer casing locked in sand (22 ft of casing removed with the lower portion remaining below the mud line). See BB-38a.
Boring terminated at 59.4 feet.

346.6

Depth (ft)	Blows (/6")	UCS Qu (tsf)	Moist (%)
	10 8 5	NC	--
-45			
	5 6 5	NC	--
-50			
	5 10 11	NC	--
-55			
	50/1"	NC	--
-60			
-65			
-70			
-75			
-80			

The Unconfined Compressive Strength (UCS) Failure Mode is indicated by (B-Bulge, S-Shear, P-Penetrometer)
AASHTO Classifications are based on visual classifications unless otherwise noted BBS, form 137 (Rev. 8-99)

Illinois Department of Transportation
Division of Highways
sci engineering inc

SOIL BORING LOG

Page 1 of 2

Date 04/07/21

ROUTE FAI 270 DESCRIPTION I-270 over the Mississippi River LOGGED BY SCI

SECTION 60B-1 LOCATION Pier 17, SEC. 25, TWP. 4N, RNG. 10W
Lat 38.763155 Long -90.168357

COUNTY Madison DRILLING METHOD HSA, NQ Casing HAMMER TYPE Automatic

STRUCT. NO. 060-0350 (EB)
Station 806+89.23

BORING NO. BB-38a
Station 1815+17.74
Offset 32.8 ft R (EB)
Ground Surface Elev. 405.1 ft

Surface Water Elev. 397.8 ft
Stream Bed Elev. ft

Groundwater Elev.:
First Encounter ft
Upon Completion ft
After Hrs. ft

River surface elevation at 405.1 (+/-) feet. Surface elevation at river bottom = 392.3 (+/-) feet.

392.3

No SPT sampling from the mudline to top of bedrock. See BB-38 for SPT sampled materials.

385.1

365.1

Depth (ft)	Blows (/6")	UCS Qu (tsf)	Moist (%)
-5			
-10			
-15			
-20			
-25			
-30			
-35			
-40			

The Unconfined Compressive Strength (UCS) Failure Mode is indicated by (B-Bulge, S-Shear, P-Penetrometer)
AASHTO Classifications are based on visual classifications unless otherwise noted BBS, form 137 (Rev. 8-99)

Illinois Department of Transportation
Division of Highways
sci engineering inc

SOIL BORING LOG

Page 2 of 2

Date 04/07/21

ROUTE FAI 270 DESCRIPTION I-270 over the Mississippi River LOGGED BY SCI

SECTION 60B-1 LOCATION Pier 17, SEC. 25, TWP. 4N, RNG. 10W
Lat 38.763155 Long -90.168357

COUNTY Madison DRILLING METHOD HSA, NQ Casing HAMMER TYPE Automatic

STRUCT. NO. 060-0350 (EB)
Station 806+89.23

BORING NO. BB-38a
Station 1815+17.74
Offset 32.8 ft R (EB)
Ground Surface Elev. 405.1 ft

Surface Water Elev. 397.8 ft
Stream Bed Elev. ft

Groundwater Elev.:
First Encounter ft
Upon Completion ft
After Hrs. ft

DEPTH (ft)	BLOWS (/6")	UCS Qu (tsf)	MOIST (%)
-45			
-50			
-55			
346.3 Borehole continued with rock coring. -60			

The Unconfined Compressive Strength (UCS) Failure Mode is indicated by (B-Bulge, S-Shear, P-Penetrometer)
AASHTO Classifications are based on visual classifications unless otherwise noted BBS, form 137 (Rev. 8-99)

Illinois Department of Transportation
Division of Highways
sci engineering inc

ROCK CORE LOG

Page 1 of 2

Date 04/07/21

ROUTE FAI 270 DESCRIPTION I-270 over the Mississippi River LOGGED BY SCI

SECTION 60B-1 LOCATION Pier 17, SEC. 25, TWP. 4N, RNG. 10W
Lat 38.763155 Long -90.168357

COUNTY Madison CORING METHOD Conventional

STRUCT. NO. 060-0350 (EB)
Station 806+89.23

CORING BARREL TYPE & SIZE Solid Barrel NQ
Core Diameter 1.86 in
Top of Rock Elev. 346.3 ft
Begin Core Elev. 346.3 ft

BORING NO. BB-38a
Station 1815+17.74
Offset 32.8 ft R (EB)
Ground Surface Elev. 405.1 ft

DEPTH (ft)	CORE (#)	RECOVERY (%)	R.Q.D. (%)	CORE TIME (min/ft)	STRENGTH (tsf)	MOISTURE (%)
Limestone: Light gray, hard to very hard, very finely crystalline, massive bedding, slightly weathered, dense. 346.3	1	98	87	3.5		
-60						
Depth 61.9', Dry Density: 167.6 pcf.					615.3	0.1
-65						
Depth 68.0', Dry Density: 166.9 pcf.					800.7	0.1
	2	99	98	3.2		
-70						
Depth 71.2', Dry Density: 165.6 pcf.					318.3	0.2
-75						
Depth 77.0', Dry Density: 166.0 pcf.					656.1	0.1

Color pictures of the cores Yes
Cores will be stored for examination until completion
The "Strength" column represents the uniaxial compressive strength of the core sample (ASTM D-2938)
BBS, form 138 (Rev. 8-99)

Illinois Department of Transportation
Division of Highways
sci engineering inc

ROCK CORE LOG

Page 2 of 2

Date 04/07/21

ROUTE FAI 270 DESCRIPTION I-270 over the Mississippi River LOGGED BY SCI

SECTION 60B-1 LOCATION Pier 17, SEC. 25, TWP. 4N, RNG. 10W
Lat 38.763155 Long -90.168357

COUNTY Madison CORING METHOD Conventional

STRUCT. NO. 060-0350 (EB)
Station 806+89.23

CORING BARREL TYPE & SIZE Solid Barrel NQ
Core Diameter 1.86 in
Top of Rock Elev. 346.3 ft
Begin Core Elev. 346.3 ft

BORING NO. BB-38a
Station 1815+17.74
Offset 32.8 ft R (EB)
Ground Surface Elev. 405.1 ft

DEPTH (ft)	CORE (#)	RECOVERY (%)	R.Q.D. (%)	CORE TIME (min/ft)	STRENGTH (tsf)	MOISTURE (%)
Thin to thick bedded. Limestone: Light gray, hard to very hard, very finely crystalline, massive bedding, slightly weathered, dense. *(continued)* -80	3	100	90	3.7	696.2	0.2
Depth 78.9', Dry Density: 165.4 pcf.						
-85						
Depth 86.1', Dry Density: 166.5 pcf.					485.5	0.1
316.4 Boring terminated at 88.7 feet.						
-90						
-95						

Color pictures of the cores Yes
Cores will be stored for examination until completion
The "Strength" column represents the uniaxial compressive strength of the core sample (ASTM D-2938)
BBS, form 138 (Rev. 8-99)

Illinois Department of Transportation
Division of Highways
sci engineering inc

SOIL BORING LOG

Page 1 of 2

Date 11/5-6/2020

ROUTE FAI 270 DESCRIPTION I-270 over the Mississippi River LOGGED BY SCI

SECTION 60B-1 LOCATION Pier 18, SEC. 25, TWP. 4N, RNG. 10W
Lat 38.76292731 Long -90.16776551

COUNTY Madison DRILLING METHOD CFA, Mud Rotary HAMMER TYPE Automatic

STRUCT. NO. 060-0350 (EB)
Station 806+89.23

BORING NO. BB-44
Station 1816+98.12
Offset 36.5 ft R (EB)
Ground Surface Elev. 416.0 ft

Surface Water Elev. ft
Stream Bed Elev. ft

Groundwater Elev.:
First Encounter None. ft
Upon Completion ft
After Hrs. ft

Description	Elev.	DEPTH (ft)	BLOWS (/6")	UCS Qu (tsf)	MOIST (%)
Clay: Gray, soft, moist, fill, with layers of fine sand, A-6.			2 2 1	NC	16
Dark gray. *Atterberg Limits test performed.*		-5	1 1 1	0.5 S/5	13
Medium stiff, with crushed rock.	408.0		1 2 5	NC	11
Silty Clay: Light to dark gray, medium stiff, moist, fill, with layers of fine sand, A-6.	405.5	-10	3 4 4	NC	21
Clay Loam: Gray, medium stiff, moist, A-4. *Grain Size Analysis performed.*	403.0		2 3 3	NC	--
Clay: Gray, soft, moist, *A-7.*		-15	1 1 2	<0.5 P	33
Atterberg Limits test performed.			1 1 1	0.2 B/20	39
		-20	0 1 1	0.2 B/20	38
Clay: Gray, soft, moist, A-7. *(continued)*			0 1 1	0.2 B/20	41
Sandy Loam: Gray, very loose to loose, moist, fine grained, A-2. *Grain Size Analysis performed.*	393.0	-25	2 3 3	NC	28
Silty Clay: Gray, medium stiff, moist, A-6.	390.5		2 5 7	NC	--
Sand: Gray, medium dense, moist, fine to coarse grained, A-3.	389.0	-30	5 5 5	NC	--
Gray and brown.		-35	6 4 5	NC	--
Gray.		-40	13 12 15	NC	--

The Unconfined Compressive Strength (UCS) Failure Mode is indicated by (B-Bulge, S-Shear, P-Penetrometer)
AASHTO Classifications are based on visual classifications unless otherwise noted BBS, form 137 (Rev. 8-99)

Illinois Department of Transportation
Division of Highways
sci engineering inc

SOIL BORING LOG

Page 2 of 2

Date 11/5-6/2020

ROUTE FAI 270 DESCRIPTION I-270 over the Mississippi River LOGGED BY SCI

SECTION 60B-1 LOCATION Pier 18, SEC. 25, TWP. 4N, RNG. 10W
Lat 38.76292731 Long -90.16776551

COUNTY Madison DRILLING METHOD CFA, Mud Rotary HAMMER TYPE Automatic

STRUCT. NO. 060-0350 (EB)
Station 806+89.23

BORING NO. BB-44
Station 1816+98.12
Offset 36.5 ft R (EB)
Ground Surface Elev. 416.0 ft

Surface Water Elev. ft
Stream Bed Elev. ft

Groundwater Elev.:
First Encounter None. ft
Upon Completion ft
After Hrs. ft

Description	Elev.	DEPTH (ft)	BLOWS (/6")	UCS Qu (tsf)	MOIST (%)
Sand: Gray, medium dense, moist, fine to coarse grained, A-3. *(continued)*					
Trace organics.		-45	10 10 10	NC	--
		-50	1 1 2	NC	--
With wood.	356.0	-60	7 7 7	NC	--
Sand: Gray, dense, moist, trace organics, A-1.		-65	22 18 23	NC	--
Medium dense, trace limestone gravel.		-70	13 8 7	NC	--
Weathered Limestone.	345.0				
Borehole continued with rock coring.	343.0	-75	19 23 22	NC	--

The Unconfined Compressive Strength (UCS) Failure Mode is indicated by (B-Bulge, S-Shear, P-Penetrometer)
AASHTO Classifications are based on visual classifications unless otherwise noted BBS, form 137 (Rev. 8-99)

Illinois Department of Transportation
Division of Highways
sci engineering inc

ROCK CORE LOG

Page 1 of 2

Date 11/5-6/2020

ROUTE FAI 270 DESCRIPTION I-270 over the Mississippi River LOGGED BY SCI

SECTION 60B-1 LOCATION Pier 18, SEC. 25, TWP. 4N, RNG. 10W
Lat 38.76292731 Long -90.16776551

COUNTY Madison CORING METHOD Conventional

STRUCT. NO. 060-0350 (EB)
Station 806+89.23

CORING BARREL TYPE & SIZE Solid Barrel NX
Core Diameter 2.06 in
Top of Rock Elev. 345.0 ft
Begin Core Elev. 343.0 ft

BORING NO. BB-44
Station 1816+98.12
Offset 36.5 ft R (EB)
Ground Surface Elev. 416.0 ft

Description	Elev.	DEPTH (ft)	CORE (#)	RECOVERY (%)	R.Q.D. (%)	CORE TIME (min/ft)	STRENGTH (tsf)	MOISTURE (%)
Shaley Limestone: Gray, hard to very hard, aphanitic to very finely crystalline, banded to thinly bedded, moderately weathered, dense, with clay seams.	343.0		1	92	35	4.5		
Depth 74.6 feet. Dry Density: 166.6 pcf.		-75					976.0	0.3
Depth 78.0 feet. Dry Density: 167.3 pcf.		-80					1358.0	0.1
Thinly bedded. *Depth 83.6 feet. Dry Density: 166.0 pcf.*		-85	2	96	58	4.9	1292.3	0.2
Depth 88.4 feet. Dry Density: 167.3 pcf.		-90					687.4	0.1
Depth 91.2 feet. Dry Density: 167.0 pcf.			3	86	48	2.3	844.3	0.1

Color pictures of the cores Yes
Cores will be stored for examination until completion
The "Strength" column represents the uniaxial compressive strength of the core sample (ASTM D-2938)
BBS, form 138 (Rev. 8-99)

Illinois Department of Transportation
Division of Highways
sci engineering inc

ROCK CORE LOG

Date 11/5-6/2020

ROUTE FAI 270 DESCRIPTION I-270 over the Mississippi River LOGGED BY SCI

SECTION 60B-1 LOCATION Pier 18, SEC. 25, TWP. 4N, RNG. 10W
Lat 38.76292731 Long -90.167765 51

COUNTY Madison CORING METHOD Conventional

STRUCT. NO. 060-0350 (EB) CORING BARREL TYPE & SIZE Solid Barrel NX
Station 806+89.23

Core Diameter 2.06 in
Top of Rock Elev. 345.0 ft
Begin Core Elev. 343.0 ft

BORING NO. BB-44
Station 1816+98.12
Offset 36.5 ft R (EB)
Ground Surface Elev. 416.0 ft

	DEPTH (ft)	CORE (#)	RECOVERY (%)	R.Q.D. (%)	CORE TIME (min/ft)	STRENGTH (tsf)	MOISTURE (%)
Shaley Limestone: Gray, hard to very hard, aphanitic to very finely crystalline, banded to thinly bedded, moderately weathered, dense, with clay seams. *(continued)*	-95						
Depth 96.3 feet. Dry Density: 168.2 pcf.						1026.9	0.1
	-100						
	314.0						
Boring terminated at 102.0 feet.	-105						
	-110						

Color pictures of the cores Yes
Cores will be stored for examination until completion
The "Strength" column represents the uniaxial compressive strength of the core sample (ASTM D-2938)

BBS, form 138 (Rev. 8-99)

Illinois Department of Transportation
Division of Highways
sci engineering inc

SOIL BORING LOG

Date 9/05-06/2018

ROUTE FAI 270 DESCRIPTION I-270 over the Mississippi River LOGGED BY SCI

SECTION 60B-1 LOCATION Pier 19, SEC. 25, TWP. 4N, RNG. 10W
Lat 38.76274067 Long -90.16689324

COUNTY Madison DRILLING METHOD CFA, Mud Rotary HAMMER TYPE Automatic

STRUCT. NO. 060-0350 (EB)
Station 806+89.23

BORING NO. BB-32
Station 1819+55.69
Offset 24.4 ft R (EB)
Ground Surface Elev. 416.0 ft

Surface Water Elev. ft
Stream Bed Elev. ft

Groundwater Elev.:
First Encounter 400.0 ft ▼
Upon Completion ft
After Hrs. ft

Description	Elev.	DEPTH (ft)	BLOWS (/6")	UCS Qu (tsf)	MOIST (%)
Topsoil.	416.0				
Sand: Light gray, fine grained, very dense, with fine concrete gravel, dry, fill, A-2.			58 50/3"	NC	--
Silty Loam: Brown, very soft, moist to wet, A-4.	413.0	-5	3 2 2	0.5 S/10	21
			0 2 2	0.3 P	27
Silty Clay Loam: Brown, very soft, wet, A-6.	408.0				
Clay: Brown, very soft, moist to wet, A-7.	407.0	-10	0 2 1	0.9 S/15	42
Silty Loam: Gray, soft. very moist to wet, A-4. *Particle Size Analysis Test performed.*	404.5		1 2 2	0.3 P	39
Sand: Brown, fine grained, loose to medium dense, wet, A-2.	401.3	-15	2 1 6	0.3 P	36
			1 4 5	NC	--
		-20	6 11 13	NC	--
Sand: Brown, fine grained, loose to medium dense, wet, A-2. *(continued)*			8 11 10	NC	--
			7 5 7	NC	--
		-25	9 11 10	NC	--
Sandy Loam: Brown, fine to coarse grained, medium dense, A-1-b. *Grain Size Analysis Test performed.*	388.0				
		-30	5 5 6	NC	--
Sand: Gray, fine to coarse grained, medium dense to dense, trace fine gravel, A-2.	384.0				
		-35	15 13 9	NC	--
		-40	17 20 22	NC	--

The Unconfined Compressive Strength (UCS) Failure Mode is indicated by (B-Bulge, S-Shear, P-Penetrometer)
AASHTO Classifications are based on visual classifications unless otherwise noted BBS, form 137 (Rev. 8-99)

Illinois Department of Transportation
Division of Highways
sci engineering inc

SOIL BORING LOG

Date 9/05-06/2018

ROUTE FAI 270 DESCRIPTION I-270 over the Mississippi River LOGGED BY SCI

SECTION 60B-1 LOCATION Pier 19, SEC. 25, TWP. 4N, RNG. 10W
Lat 38.76274067 Long -90.16689324

COUNTY Madison DRILLING METHOD CFA, Mud Rotary HAMMER TYPE Automatic

STRUCT. NO. 060-0350 (EB)
Station 806+89.23

BORING NO. BB-32
Station 1819+55.69
Offset 24.4 ft R (EB)
Ground Surface Elev. 416.0 ft

Surface Water Elev. ft
Stream Bed Elev. ft

Groundwater Elev.:
First Encounter 400.0 ft ▼
Upon Completion ft
After Hrs. ft

Description	Elev.	DEPTH (ft)	BLOWS (/6")	UCS Qu (tsf)	MOIST (%)
Sand: Gray, fine to coarse grained, medium dense to dense, trace fine gravel, A-2. *(continued)*					
Sandy Loam: Gray, fine to coarse grained, medium dense, trace coal, A-1-b. *Grain Size Analysis Test performed.*	374.0				
		-45	5 6 9	NC	--
Sand: Gray, fine to coarse grained, medium dense, A-2.	369.0				
		-50	16 17 9	NC	--
Sand: Gray, fine to coarse grained, medium dense to very dense, trace fine gravel, A-1.	364.0				
		-55	11 12 12	NC	--
	356.3	-60	41 30 23	NC	--
Gravel: fine to coarse grained, very dense, with fine to coarse sand, possible cobbles, A-1. *(continued)*					
Sand: coarse grained, medium dense, possible cobbles and boulders, A-1.	354.0				
Sand: Gray, fine to coarse grained, medium dense, with fine to coarse gravel, A-1.	352.5	-65	55 14 13	NC	--
Sand: Gray, fine to coarse grained, medium dense, trace fine gravel, A-2.	349.0				
		-70	13 13 13	NC	--
Cobble.		-75	50/4.5" 50/0.5"	NC	--
Weathered Limestone: Gray. *No recovery at 76 and 76.5 ft.*	341.0				
End of drilling on 9/4 at 76 feet.	339.5		100/0"	NC	--
Boring terminated at 76.5 feet. Boring grouted to 76.5 feet.		-80	100/0" 100/0"	NC	--

The Unconfined Compressive Strength (UCS) Failure Mode is indicated by (B-Bulge, S-Shear, P-Penetrometer)
AASHTO Classifications are based on visual classifications unless otherwise noted BBS, form 137 (Rev. 8-99)

Illinois Department of Transportation
Division of Highways
sci engineering inc

SOIL BORING LOG

Page 1 of 2

Date 11/9-10/2020

ROUTE FAI 270 DESCRIPTION I-270 over the Mississippi River LOGGED BY SCI

SECTION 60B-1 LOCATION Pier 20, SEC. 25, TWP. 4N, RNG. 10W
Lat 38.7624999 Long -90.16614979

COUNTY Madison DRILLING METHOD CFA, Mud Rotary HAMMER TYPE Automatic

STRUCT. NO. 060-0350 (EB)
Station 806+89.23

BORING NO. BB-46
Station 1821+84.41
Offset 42.4 ft R (EB)
Ground Surface Elev. 414.5 ft

Surface Water Elev. ft
Stream Bed Elev. ft

Groundwater Elev.:
First Encounter 406.0 ft ▼
Upon Completion ft
After Hrs. None ft

Description	Elev.	DEPTH (ft)	BLOWS (/6")	UCS Qu (tsf)	MOIST (%)
Silty Clay: Gray, medium stiff, moist, fill, A-7.			2 8 10	0.8 B/20	11
Sand: Gray, loose, coarse-grained, crushed rock, fill, A-1. *Grain Size Analysis performed.*	410.5	-5	8 18 31	0.8 S/20	20
Clay: Gray, trace brown, soft, A-7. *Atterberg Limits test performed.*	407.5	-10	3 3 3 / 1 1 2	0.3 S/10 / 0.8 S/15	19 / 38
Silty Clay: Gray, soft, moist, A-6.	404.0		1 1 1	0.4 B/20	35
Sandy Loam: Gray, medium dense, moist, A-2.	401.5	-15	5 7 7 / 6 6 7	NC / NC	-- / --
	394.5	-20	3 5 9	NC	--
Sand: Gray, loose to medium dense, moist, fine to coarse grained, A-3. *Grain Size Analysis performed.*		-25	8 10 9 / 4 5 10	NC / NC	-- / --
		-30	7 12 9 / 5 7 11	NC / NC	-- / --
		-35	9 9 10	NC	--
		-40	10 10 9	NC	--

The Unconfined Compressive Strength (UCS) Failure Mode is indicated by (B-Bulge, S-Shear, P-Penetrometer)
AASHTO Classifications are based on visual classifications unless otherwise noted BBS, form 137 (Rev. 8-99)

Illinois Department of Transportation
Division of Highways
sci engineering inc

SOIL BORING LOG

Page 2 of 2

Date 11/9-10/2020

ROUTE FAI 270 DESCRIPTION I-270 over the Mississippi River LOGGED BY SCI

SECTION 60B-1 LOCATION Pier 20, SEC. 25, TWP. 4N, RNG. 10W
Lat 38.7624999 Long -90.16614979

COUNTY Madison DRILLING METHOD CFA, Mud Rotary HAMMER TYPE Automatic

STRUCT. NO. 060-0350 (EB)
Station 806+89.23

BORING NO. BB-46
Station 1821+84.41
Offset 42.4 ft R (EB)
Ground Surface Elev. 414.5 ft

Surface Water Elev. ft
Stream Bed Elev. ft

Groundwater Elev.:
First Encounter 406.0 ft ▼
Upon Completion ft
After Hrs. None ft

Description	Elev.	DEPTH (ft)	BLOWS (/6")	UCS Qu (tsf)	MOIST (%)
Sand: Gray, loose to medium dense, moist, fine to coarse grained, A-3. *(continued)*		-45	6 9 8	NC	--
Sand: Gray, medium dense, moist, fine grained, A-2.	366.5	-50	6 8 11	NC	--
		-55	4 7 9	NC	--
Sandy Loam: Gray, dense, moist, fine-grained, A-3.	357.5	-60	4 10 21	NC	--
Sandy Loam: Gray, dense, moist, fine-grained, A-3. *(continued)*		-65	9 8 10	NC	--
Sand: Gray, medium dense, moist, fine to coarse grained, A-3.	352.5	-70	9 7 7	NC	--
Weathered Limestone.	342.0	-75	50/1"	NC	--
Borehole continued with rock coring.	339.0	-80			

The Unconfined Compressive Strength (UCS) Failure Mode is indicated by (B-Bulge, S-Shear, P-Penetrometer)
AASHTO Classifications are based on visual classifications unless otherwise noted BBS, form 137 (Rev. 8-99)

Illinois Department of Transportation
Division of Highways
sci engineering inc

ROCK CORE LOG

Page 1 of 2

Date 11/9-10/2020

ROUTE FAI 270 DESCRIPTION I-270 over the Mississippi River LOGGED BY SCI

SECTION 60B-1 LOCATION Pier 20, SEC. 25, TWP. 4N, RNG. 10W
Lat 38.7624999 Long -90.16614979

COUNTY Madison CORING METHOD Conventional

STRUCT. NO. 060-0350 (EB)
Station 806+89.23

CORING BARREL TYPE & SIZE Solid Barrel NX
Core Diameter 2.06 in
Top of Rock Elev. 341.0 ft
Begin Core Elev. 339.0 ft

BORING NO. BB-46
Station 1821+84.41
Offset 42.4 ft R (EB)
Ground Surface Elev. 414.5 ft

Description	Elev.	DEPTH (ft)	CORE (#)	RECOVERY (%)	R.Q.D. (%)	CORE TIME (min/ft)	STRENGTH (tsf)	MOISTURE (%)
Shaley Limestone: Gray, aphanitic to very finely crystalline, banded to medium bedding, slightly to moderately weathered, dense.	339.0		1	93	60	5		
Depth 78.2 feet. Dry Density: 167.3 pcf.		-80					1412.8	0.1
Depth 82.2 feet. Dry Density: 174.2 pcf.		-85					1196.6	0.1
Limestone: Gray, hard, aphanitic to very finely crystalline, thinly bedded, slightly weathered, dense.	329.0		2	100	53	3.9		
Depth 89.6 feet. Dry Density: 166.6 pcf.		-90					1208.3	0.1
Depth 91.7 feet. Dry Density: 175.4 pcf.		-95					874.7	0.1
	319.0							

Color pictures of the cores Yes
Cores will be stored for examination until completion
The "Strength" column represents the uniaxial compressive strength of the core sample (ASTM D-2938)
BBS, form 138 (Rev. 8-99)

Illinois Department of Transportation
Division of Highways
sci engineering inc

ROCK CORE LOG

Date 11/9-10/2020

ROUTE FAI 270 DESCRIPTION I-270 over the Mississippi River LOGGED BY SCI

SECTION 60B-1 LOCATION Pier 20, SEC. 25, TWP. 4N, RNG. 10W
Lat 38.7624999 Long -90.16614979

COUNTY Madison CORING METHOD Conventional

STRUCT. NO. 060-0350 (EB)
Station 806+89.23

CORING BARREL TYPE & SIZE Solid Barrel NX

Core Diameter 2.06 in
Top of Rock Elev. 341.0 ft
Begin Core Elev. 339.0 ft

BORING NO. BB-46
Station 1821+84.41
Offset 42.4 ft R (EB)
Ground Surface Elev. 414.5 ft

	DEPTH (ft)	CORE (#)	RECOVERY (%)	R.Q.D. (%)	CORE TIME (min/ft)	STRENGTH (tsf)	MOISTURE (%)
Shaley Limestone: Gray, hard, aphanitic to very finely crystalline, banded to medium bedded, slightly weathered, dense. *(continued)*		3	98	44	3.3		
Depth 97.5 feet. Dry Density: 173.7 pcf.						1186.4	0.1
	-100						
Depth 102.5 feet. Dry Density: 168.7 pcf.						555.2	0.2
	-105						
	309.0						
Boring terminated at 105.5 feet.							
	-110						
	-115						

Color pictures of the cores Yes
Cores will be stored for examination until completion
The "Strength" column represents the uniaxial compressive strength of the core sample (ASTM D-2938)

BBS, form 138 (Rev. 8-99)

Illinois Department of Transportation
Division of Highways
sci engineering inc

SOIL BORING LOG

Page 1 of 2

Date 10/28/20

ROUTE FAI 270 DESCRIPTION I-270 over the Mississippi River LOGGED BY SCI

SECTION 60B-1 LOCATION Pier 21, SEC. 25, TWP. 4N, RNG. 10W
Lat 38.76231612 Long -90.16539652

COUNTY Madison DRILLING METHOD CFA, Mud Rotary HAMMER TYPE Automatic

STRUCT. NO. 060-0350 (EB)
Station 806+89.23

BORING NO. BB-52
Station 1824+09.39
Offset 39.8 ft R (EB)
Ground Surface Elev. 415.2 ft

Surface Water Elev. ft
Stream Bed Elev. ft

Groundwater Elev.:
First Encounter 406.7 ft ▼
Upon Completion ft
After Hrs. 406.7 ft ▽

Description	Elev.	DEPTH (ft)	BLOWS (/6")	UCS Qu (tsf)	MOIST (%)
Silty Clay: Brown and gray, moist, trace crushed rock, fill, A-7.			5 10 8	1.8 S/10	12
Atterberg Limits test performed.			5 5 7	0.9 S/5	26
Silty Clay: Gray and light gray, soft, moist, A-7	410.2	-5	2 2 1	0.2 B/20	26
Silt: Gray, trace brown, soft, moist, trace organics A-6 ▼ *Grain Size Analysis performed.*	407.7		1 1 1	NC	36
Clay: Gray, very soft, moist, A-7.	405.2	-10	2 1 0	0.3 P	--
Silty Clay Loam: Gray, trace brown, soft, moist, A-6. *Grain Size Analysis performed.*	403.2		0 0 3	<0.25 P	--
Sand: Gray, medium dense, moist, fine to coarse grained, A-2.	400.2	-15	6 6 6	NC	--
	395.2	-20	8 9 8	NC	--
Sand: Gray, medium dense to dense, moist, A-3.			7 10 9	NC	--
		-25	5 6 8	NC	--
			5 5 10	NC	--
		-30	13 14 11	NC	--
		-35	9 12 10	NC	--
		-40	4 7 10	NC	--

The Unconfined Compressive Strength (UCS) Failure Mode is indicated by (B-Bulge, S-Shear, P-Penetrometer)
AASHTO Classifications are based on visual classifications unless otherwise noted BBS, form 137 (Rev. 8-99)

Illinois Department of Transportation
Division of Highways
sci engineering inc

SOIL BORING LOG

Page 2 of 2

Date 10/28/20

ROUTE FAI 270 DESCRIPTION I-270 over the Mississippi River LOGGED BY SCI

SECTION 60B-1 LOCATION Pier 21, SEC. 25, TWP. 4N, RNG. 10W
Lat 38.76231612 Long -90.16539652

COUNTY Madison DRILLING METHOD CFA, Mud Rotary HAMMER TYPE Automatic

STRUCT. NO. 060-0350 (EB)
Station 806+89.23

BORING NO. BB-52
Station 1824+09.39
Offset 39.8 ft R (EB)
Ground Surface Elev. 415.2 ft

Surface Water Elev. ft
Stream Bed Elev. ft

Groundwater Elev.:
First Encounter 406.7 ft ▼
Upon Completion ft
After Hrs. 406.7 ft ▽

Description	Elev.	DEPTH (ft)	BLOWS (/6")	UCS Qu (tsf)	MOIST (%)
Sand: Gray, medium dense to dense, moist, A-3. *(continued)*			8 8 8	NC	--
Loose.		-45	5 5 3	NC	--
		-50	4 4 4	NC	--
		-55	3 5 4	NC	--
Sand: Gray, medium dense, moist, A-1.			8 8 7	NC	--
Sand: Gray, medium dense, moist, A-3.	350.2	-65	4 6 5	NC	--
Weathered Limestone.	342.2	-70	36 45 21	NC	--
Borehole continued with rock coring.	337.2	-75			
		-80			

The Unconfined Compressive Strength (UCS) Failure Mode is indicated by (B-Bulge, S-Shear, P-Penetrometer)
AASHTO Classifications are based on visual classifications unless otherwise noted BBS, form 137 (Rev. 8-99)

Illinois Department of Transportation
Division of Highways
sci engineering inc

ROCK CORE LOG

Page 1 of 2

Date 10/28/20

ROUTE FAI 270 DESCRIPTION I-270 over the Mississippi River LOGGED BY SCI

SECTION 60B-1 LOCATION Pier 21, SEC. 25, TWP. 4N, RNG. 10W
Lat 38.76231612 Long -90.16539652

COUNTY Madison CORING METHOD Conventional

CORING BARREL TYPE & SIZE Solid Barrel NX
Core Diameter 2.06 in
Top of Rock Elev. 338.7 ft
Begin Core Elev. 337.2 ft

STRUCT. NO. 060-0350 (EB)
Station 806+89.23

BORING NO. BB-52
Station 1824+09.39
Offset 39.8 ft R (EB)
Ground Surface Elev. 415.2 ft

Description	Elev.	DEPTH (ft)	CORE (#)	RECOVERY (%)	R.Q.D. (%)	CORE TIME (min/ft)	STRENGTH (tsf)	MOISTURE (%)
Limestone: Gray, hard, very finely crystalline, thinly bedded, moderately weathered, dense. *Depth 78.3 feet. Dry Density: 166.8 pcf.*	337.2		1	100	61	5	827.6	0.1
Soft, highly weathered. Hard, slightly to moderately weathered. *Depth 84.9 feet. Dry Density: 166.1 pcf.*		-80					669.3	0.3
Depth 88.4 feet. Dry Density: 167.6 pcf.		-85	2	100	41	2.5	1062.2	0.1
Depth 94.9 feet. Dry Density: 167.6 pcf.		-90					1197.3	0.1
	317.2	-95						

Color pictures of the cores Yes
Cores will be stored for examination until completion
The "Strength" column represents the uniaxial compressive strength of the core sample (ASTM D-2938)
BBS, form 138 (Rev. 8-99)

MODEL: Default
FILE NAME: C:\ICS4PDF\9297\45087_593\060-0350-D876J90-cda-30aBOR.dgn

CDI CIVIL DESIGN, INC.

USER NAME =	DESIGNED -	REVISED -	
	CHECKED -	REVISED -	
PLOT SCALE =	DRAWN - JGS	REVISED -	
PLOT DATE =	CHECKED -	REVISED -	

STATE OF ILLINOIS
DEPARTMENT OF TRANSPORTATION

BORING LOGS – PIER 21
STRUCTURE NO. 060–0350 (EB)
SHEET 278 OF 292 SHEETS

F.A.I RTE.	SECTION	COUNTY	TOTAL SHEETS	SHEET NO.
270	60B-1	MADISON	860	478
		CONTRACT NO. 76J90		
		ILLINOIS FED. AID PROJECT		

9/13/2021 8:23:57 PM

Illinois Department of Transportation
Division of Highways
sci engineering inc

ROCK CORE LOG

Date 10/28/20

ROUTE FAI 270 DESCRIPTION I-270 over the Mississippi River LOGGED BY SCI

SECTION 60B-1 LOCATION Pier 21, SEC. 25, TWP. 4N, RNG. 10W
Lat 38.76231612 Long -90.16539652

COUNTY Madison CORING METHOD Conventional

STRUCT. NO. 060-0350 (EB) CORING BARREL TYPE & SIZE Solid Barrel NX
Station 806+89.23

Core Diameter 2.06 in
Top of Rock Elev. 338.7 ft
Begin Core Elev. 337.2 ft

BORING NO. BB-52
Station 1824+09.39
Offset 39.8 ft R (EB)
Ground Surface Elev. 415.2 ft

	DEPTH (ft)	CORE (#)	RECOVERY (%)	R.Q.D. (%)	CORE TIME (min/ft)	STRENGTH (tsf)	MOISTURE (%)
Limestone: Gray, hard, very finely crystalline, thin to medium bedded, moderately weathered, dense.		3	100	70	3.2		
	-100						
Depth 101.3 feet. Dry Density: 167.0 pcf.						630.1	0.1
	-105						
Depth 107.2 feet. Dry Density: 156.0 pcf.						416.0	0.1
Boring terminated at 108.0 feet.							
	-110						
	-115						

Color pictures of the cores Yes
Cores will be stored for examination until completion
The "Strength" column represents the uniaxial compressive strength of the core sample (ASTM D-2938)

BBS, form 138 (Rev. 8-99)

Illinois Department of Transportation
Division of Highways
sci engineering inc

SOIL BORING LOG

Date 10/20,27-28/2020

ROUTE FAI 270 DESCRIPTION I-270 over the Mississippi River LOGGED BY SCI

SECTION 60B-1 LOCATION Pier 22, SEC. 36, TWP. 4N, RNG. 10W
Lat 38.76211524 Long -90.16461049

COUNTY Madison DRILLING METHOD CFA, Mud Rotary HAMMER TYPE Automatic

STRUCT. NO. 060-0350 (EB)
Station 806+89.23

BORING NO. BB-54
Station 1826+45.17
Offset 40.2 ft R (EB)
Ground Surface Elev. 413.7 ft

Surface Water Elev. ft
Stream Bed Elev. ft

Groundwater Elev.:
First Encounter 405.2 ft ▼
Upon Completion ft
After Hrs. ft

Description	Elev.	DEPTH (ft)	BLOWS (/6")	UCS Qu (tsf)	MOIST (%)
Silty Loam: Brown, stiff, moist, with wood and crushed concrete, fill, A-6.			7 6 6	3.9 S/10	13
No crushed concrete or wood.		-5	5 5 6	3.1 S/20	19
Grain Size Analysis performed.			3 2 3	0.8 S/20	20
	405.2 ▼				
Sand: Brown, fine to coarse grained, loose, moist, A-3.		-10	2 3 4	NC	
	403.2				
Clay: Dark gray, soft to medium stiff, moist, A-6.			5 2 2	NC	42
	401.7				
Silty Clay Loam: Gray, very soft to soft, moist, A-6.					
Grain Size Analysis performed.		-15	1 1 0	NC	34
			2 1 1	NC	37
Dense.		-20	2 2 0	NC	33
	393.7				

Description	Elev.	DEPTH (ft)	BLOWS (/6")	UCS Qu (tsf)	MOIST (%)
Sand: Gray, medium dense, wet, A-3.			5 7 9	NC	--
		-25	6 8 5	NC	--
			6 5 9	NC	--
		-30	6 8 11	NC	--
		-35	7 8 6	NC	--
		-40	10 13 14	NC	--
	373.7				

The Unconfined Compressive Strength (UCS) Failure Mode is indicated by (B-Bulge, S-Shear, P-Penetrometer)
AASHTO Classifications are based on visual classifications unless otherwise noted BBS, form 137 (Rev. 8-99)

Illinois Department of Transportation
Division of Highways
sci engineering inc

SOIL BORING LOG

Date 10/20,27-28/2020

ROUTE FAI 270 DESCRIPTION I-270 over the Mississippi River LOGGED BY SCI

SECTION 60B-1 LOCATION Pier 22, SEC. 36, TWP. 4N, RNG. 10W
Lat 38.76211524 Long -90.16461049

COUNTY Madison DRILLING METHOD CFA, Mud Rotary HAMMER TYPE Automatic

STRUCT. NO. 060-0350 (EB)
Station 806+89.23

BORING NO. BB-54
Station 1826+45.17
Offset 40.2 ft R (EB)
Ground Surface Elev. 413.7 ft

Surface Water Elev. ft
Stream Bed Elev. ft

Groundwater Elev.:
First Encounter 405.2 ft ▼
Upon Completion ft
After Hrs. ft

Description	Elev.	DEPTH (ft)	BLOWS (/6")	UCS Qu (tsf)	MOIST (%)
Sand: Gray, dense, wet, A-3.			3 6 11	NC	--
		-45			
		-50	6 6 6	NC	--
		-55	6 6 6	NC	--
		-60	6 7 6	NC	--
	353.7				

Description	Elev.	DEPTH (ft)	BLOWS (/6")	UCS Qu (tsf)	MOIST (%)
Sand: Gray, dense, wet, A-3.			13 9 7	NC	--
		-65			
		-70	6 9 14	NC	--
		-75	6 9 12	NC	--
	336.7				
Borehole continued with rock coring.		-80			

The Unconfined Compressive Strength (UCS) Failure Mode is indicated by (B-Bulge, S-Shear, P-Penetrometer)
AASHTO Classifications are based on visual classifications unless otherwise noted BBS, form 137 (Rev. 8-99)

Illinois Department of Transportation
Division of Highways
sci engineering inc

ROCK CORE LOG

Date 10/20,27-28/2020

ROUTE FAI 270 DESCRIPTION I-270 over the Mississippi River LOGGED BY SCI

SECTION 60B-1 LOCATION Pier 22, SEC. 36, TWP. 4N, RNG. 10W
Lat 38.76211524 Long -90.16461049

COUNTY Madison CORING METHOD Conventional

STRUCT. NO. 060-0350 (EB)
Station 806+89.23

CORING BARREL TYPE & SIZE Solid Barrel NX
Core Diameter 2.06 in
Top of Rock Elev. 336.7 ft
Begin Core Elev. 335.2 ft

BORING NO. BB-54
Station 1826+45.17
Offset 40.2 ft R (EB)
Ground Surface Elev. 413.7 ft

Description	Elev.	DEPTH (ft)	CORE (#)	RECOVERY (%)	R.Q.D. (%)	CORE TIME (min/ft)	STRENGTH (tsf)	MOISTURE (%)
Limestone: Light gray, hard, very finely crystalline, thin to medium bedded, slightly to moderately weathered, dense, with shale partings. *Depth 78.7 feet. Dry Density: 167.5 pcf.*	335.2		1	98	85	2.4	877.0	0.1
		-80						
		-85						
Depth 87.3 feet. Dry Density: 167.5 pcf.							614.0	0.1
Depth 89.1 feet. Dry Density: 167.4 pcf.			2	100	67	1.7	874.8	0.1
		-90						
		-95						
Gray. *Depth 95.4 feet. Dry Density: 152.2 pcf.*							689.4	3.2
12 inch vertical fracture.	315.2							

Color pictures of the cores Yes
Cores will be stored for examination until completion
The "Strength" column represents the uniaxial compressive strength of the core sample (ASTM D-2938)
BBS, form 138 (Rev. 8-99)

Illinois Department of Transportation
Division of Highways
sci engineering inc

ROCK CORE LOG

Date 10/20,27-28/2020

ROUTE FAI 270 DESCRIPTION I-270 over the Mississippi River LOGGED BY SCI

SECTION 60B-1 LOCATION Pier 22, SEC. 36, TWP. 4N, RNG. 10W
Lat 38.76211524 Long -90.16461049

COUNTY Madison CORING METHOD Conventional

STRUCT. NO. 060-0350 (EB) CORING BARREL TYPE & SIZE Solid Barrel NX
Station 806+89.23

Core Diameter 2.06 in
Top of Rock Elev. 336.7 ft
Begin Core Elev. 335.2 ft

BORING NO. BB-54
Station 1826+45.17
Offset 40.2 ft R (EB)
Ground Surface Elev. 413.7 ft

	DEPTH (ft)	CORE (#)	RECOVERY (%)	R.Q.D. (%)	CORE TIME (min/ft)	STRENGTH (tsf)	MOISTURE (%)
Limestone: Gray, hard, very finely crystalline, thin to medium bedded, slightly to moderately weathered, dense.		3	100	92	3.4		
6 inch vertical fracture.	-100						
Depth 101.3 feet. Dry Density: 159.3 pcf.						785.9	0.2
4 inch vertical fracture.							
	-105						
Depth 107.7 feet. Dry Density: 168.7 pcf.						931.1	0.2
	305.2						
Boring terminated at 108.5 feet.							
	-110						
	-115						

Color pictures of the cores Yes
Cores will be stored for examination until completion
The "Strength" column represents the uniaxial compressive strength of the core sample (ASTM D-2938)

BBS, form 138 (Rev. 8-99)

Illinois Department of Transportation
Division of Highways
sci engineering inc

SOIL BORING LOG

Date 9/19-20/2018

ROUTE FAI 270 DESCRIPTION I-270 over the Mississippi River LOGGED BY SCI

SECTION 60B-1 LOCATION SEC. 36, TWP. 4N, RNG. 10W
Lat 38.76194319 Long -90.16417755

COUNTY Madison DRILLING METHOD HSA, Mud Rotary HAMMER TYPE Automatic

STRUCT. NO. 060-0350 (EB)
Station 806+89.23

BORING NO. BB-43
Station 1828+02.07
Offset 42.4 ft R (EB)
Ground Surface Elev. 408.8 ft

Surface Water Elev. ft
Stream Bed Elev. ft

Groundwater Elev.:
First Encounter 397.8 ft ▼
Upon Completion ft
After Hrs. ft

Description	Elev.	DEPTH (ft)	BLOWS (/6")	UCS Qu (tsf)	MOIST (%)
Clay Loam: Brown, very stiff, with gravel, fill, A-7.	405.8		8 18 9	4.5 P	19
Silty Clay Loam: Brown and gray, stiff, trace organics, moist, fill, A-6. *Particle Size Analysis Test performed.*	403.3	-5	3 4 5	1.9 B/20	26
Silty Clay: Gray, very soft to soft, with thin silt deposits and clay deposits, very moist, A-6.	398.3	-10	1 1 2	0.3 P	48
			0 0 0	0.1 B/20	37
Silty Loam: Gray, very soft, very moist, A-4. ▼	397.1		1 1 1	0.3 P	32
Sand: Gray, fine grained, very loose, very moist, A-2.	395.8				
Clay: Gray, medium stiff, very moist, A-7. *Particle Size Analysis Test performed.*		-15	2 2 3	1.4 B/20	40
Dark gray.			3 3 3	0.5 B/20	49
With silty clay deposits.		-20	0 0 0	0.2 B/20	44
Clay: Gray, medium stiff, very moist, A-7. *(continued)*			1 1 2	0.4 B/20	36
Sand: Gray, fine grained, medium dense, A-3. *Grain Size Analysis Test performed.*	385.8	-25	4 6 10	NC	--
Silty Loam: Gray, stiff, very moist, A-4.	383.3		5		
Sand: Gray, fine grained, medium dense, A-2.	382.3		6 4	NC	--
Silty Loam: Gray, medium stiff, wet, A-4. *Grain Size Analysis Test performed.*	380.8	-30	4 4 4	NC	--
Sand: Gray, fine grained, medium dense to dense, A-2.	376.8	-35	6 10 10	NC	--
		-40	4 5 5	NC	--

The Unconfined Compressive Strength (UCS) Failure Mode is indicated by (B-Bulge, S-Shear, P-Penetrometer)
AASHTO Classifications are based on visual classifications unless otherwise noted BBS, form 137 (Rev. 8-99)

Illinois Department of Transportation
Division of Highways
sci engineering inc

SOIL BORING LOG

Date 9/19-20/2018

ROUTE FAI 270 DESCRIPTION I-270 over the Mississippi River LOGGED BY SCI

SECTION 60B-1 LOCATION SEC. 36, TWP. 4N, RNG. 10W
Lat 38.76194319 Long -90.16417755

COUNTY Madison DRILLING METHOD HSA, Mud Rotary HAMMER TYPE Automatic

STRUCT. NO. 060-0350 (EB)
Station 806+89.23

BORING NO. BB-43
Station 1828+02.07
Offset 42.4 ft R (EB)
Ground Surface Elev. 408.8 ft

Surface Water Elev. ft
Stream Bed Elev. ft

Groundwater Elev.:
First Encounter 397.8 ft ▼
Upon Completion ft
After Hrs. ft

Description	Elev.	DEPTH (ft)	BLOWS (/6")	UCS Qu (tsf)	MOIST (%)
Sand: Gray, fine grained, medium dense to dense, A-2. *(continued)*		-45	16 16 16	NC	--
End of drilling and sampling at 45 feet on 9/19/18.					
Sand: Gray, fine to coarse grained, medium dense, A-2.	361.8	-50	9 9 10	NC	--
Sand: Gray, fine to coarse grained, loose, trace fine gravel, A-1.	356.8	-55	3 3 5	NC	--
Wood: Very dark brown (14 inches recovered).	350.3	-60	40 66 20	NC	--
Sand: Gray, fine to coarse grained, medium dense to dense, trace fine gravel, A-1.		-65	8 8 8	NC	--
Sand: Gray, fine to coarse grained, dense, trace fine gravel, A-1.	341.8	-70	10 15 16	NC	--
		-75	11 15 20	NC	--
Weathered Limestone: Gray.	330.3	-80	100/5.75"	NC	--

The Unconfined Compressive Strength (UCS) Failure Mode is indicated by (B-Bulge, S-Shear, P-Penetrometer)
AASHTO Classifications are based on visual classifications unless otherwise noted BBS, form 137 (Rev. 8-99)

Illinois Department of Transportation
Division of Highways
sci engineering inc

SOIL BORING LOG

Date 9/19-20/2018

ROUTE FAI 270 DESCRIPTION I-270 over the Mississippi River LOGGED BY SCI

SECTION 60B-1 LOCATION SEC. 36, TWP. 4N, RNG. 10W
Lat 38.76194319 Long -90.16417755

COUNTY Madison DRILLING METHOD HSA, Mud Rotary HAMMER TYPE Automatic

STRUCT. NO. 060-0350 (EB)
Station 806+89.23

BORING NO. BB-43
Station 1828+02.07
Offset 42.4 ft R (EB)
Ground Surface Elev. 408.8 ft

Surface Water Elev. ft
Stream Bed Elev. ft

Groundwater Elev.:
First Encounter 397.8 ft ▼
Upon Completion ft
After Hrs. ft

Description	Elev.	DEPTH (ft)	BLOWS (/6")	UCS Qu (tsf)	MOIST (%)
Weathered Limestone: Gray. *(continued)*	327.2		100/0.5"	NC	--
Boring terminated at 81.6 feet. Boring grouted to 81.6 feet.		-85			
		-90			
		-95			
		-100			

The Unconfined Compressive Strength (UCS) Failure Mode is indicated by (B-Bulge, S-Shear, P-Penetrometer)
AASHTO Classifications are based on visual classifications unless otherwise noted BBS, form 137 (Rev. 8-99)

MODEL: Default
FILE NAME: C:\ICS4PDF\9297\45087_594\060-0350-D876J90-cda-34aBOR.dgn

CDI CIVIL DESIGN, INC.	USER NAME =	DESIGNED -	REVISED -
		CHECKED -	REVISED -
	PLOT SCALE =	DRAWN - JGS	REVISED -
	PLOT DATE =	CHECKED -	REVISED -

STATE OF ILLINOIS
DEPARTMENT OF TRANSPORTATION

BORING LOGS – PIER 23
STRUCTURE NO. 060–0350 (EB)

SHEET 282 OF 292 SHEETS

F.A.I RTE.	SECTION	COUNTY	TOTAL SHEETS	SHEET NO.
270	60B-1	MADISON	860	482
		CONTRACT NO. 76J90		
		ILLINOIS FED. AID PROJECT		

9/13/2021 8:25:37 PM

Illinois Department of Transportation
Division of Highways
sci engineering inc

SOIL BORING LOG

Page 1 of 2

Date 10/16/20

ROUTE FAI 270 DESCRIPTION I-270 over the Mississippi River LOGGED BY SCI

SECTION 60B-1 LOCATION Pier 23, SEC. 36, TWP. 4N, RNG. 10W
Lat 38.76192505 Long -90.16381082

COUNTY Madison DRILLING METHOD CFA, Mud Rotary HAMMER TYPE Automatic

STRUCT. NO. 060-0350 (EB)
Station 806+89.23

BORING NO. BB-56
Station 1828+83.45
Offset 35.8 ft R (EB)
Ground Surface Elev. 414.0 ft

Surface Water Elev. ft
Stream Bed Elev. ft

Groundwater Elev.:
First Encounter None. ft
Upon Completion ft
After Hrs. ft

Description	Elev.	Depth (ft)	Blows (/6")	UCS Qu (tsf)	Moist (%)
Silty Clay Loam: Brown, medium stiff, moist, A-6. *Grain Size Analysis performed.*	410.5		4 4 5	0.2 B/20	15
Clay Loam: Brown, medium stiff, moist, A-6.	405.0	-5	5 4 3	2.5 P	16
			2 2 2	0.1 S/15	25
Sand: Brown, fine to coarse grained, loose, moist, A-1.	403.5	-10	1 4 5	0.2 S/10	34 19
Silty Loam: Brown, medium stiff to stiff, moist, A-4. *Grain Size Analysis performed.*	398.0	-15	6 5 6	NC	--
			1 2 4	NC	--
Sand: Brown and gray, fine to coarse grained, medium dense, moist, A-1.	394.0	-20	4 6 6	NC	--
			8 7 6	NC	--
Clay: Brownish gray, medium stiff, moist, A-7.	391.0		2 2 6	0.2 B/20	--
Sandy Loam: Brown and gray, fine to coarse grained, loose to medium stiff, moist, A-2.	382.0	-25	5 3 3	NC	--
			2 5 5	NC	--
		-30	3 3 3	NC	--
Sand: Brown and gray, fine to coarse grained, loose to medium stiff, moist, A-1.	374.0	-35	8 9 11	NC	--
		-40	15 16 21	NC	--

The Unconfined Compressive Strength (UCS) Failure Mode is indicated by (B-Bulge, S-Shear, P-Penetrometer)
AASHTO Classifications are based on visual classifications unless otherwise noted BBS, form 137 (Rev. 8-99)

Illinois Department of Transportation
Division of Highways
sci engineering inc

SOIL BORING LOG

Page 2 of 2

Date 10/16/20

ROUTE FAI 270 DESCRIPTION I-270 over the Mississippi River LOGGED BY SCI

SECTION 60B-1 LOCATION Pier 23, SEC. 36, TWP. 4N, RNG. 10W
Lat 38.76192505 Long -90.16381082

COUNTY Madison DRILLING METHOD CFA, Mud Rotary HAMMER TYPE Automatic

STRUCT. NO. 060-0350 (EB)
Station 806+89.23

BORING NO. BB-56
Station 1828+83.45
Offset 35.8 ft R (EB)
Ground Surface Elev. 414.0 ft

Surface Water Elev. ft
Stream Bed Elev. ft

Groundwater Elev.:
First Encounter None. ft
Upon Completion ft
After Hrs. ft

Description	Elev.	Depth (ft)	Blows (/6")	UCS Qu (tsf)	Moist (%)
Sand: Brown and gray, fine to coarse grained, loose to medium stiff, moist, A-1.		-45	7 9 9	NC	--
		-50	5 5 5	NC	--
		-55	7 9 9	NC	--
		-60	10 11 10	NC	--
Sand: Brown and gray, fine to coarse grained, loose to medium stiff, moist, A-1. *(continued)*		-65	6 7 6	NC	--
		-70	10 10 11	NC	--
		-75	10 9 15	NC	--
Weathered Limestone.	335.4	-80	50/1"	NC	--

The Unconfined Compressive Strength (UCS) Failure Mode is indicated by (B-Bulge, S-Shear, P-Penetrometer)
AASHTO Classifications are based on visual classifications unless otherwise noted BBS, form 137 (Rev. 8-99)

Illinois Department of Transportation
Division of Highways
sci engineering inc

SOIL BORING LOG

Page 3 of 2

Date 10/16/20

ROUTE FAI 270 DESCRIPTION I-270 over the Mississippi River LOGGED BY SCI

SECTION 60B-1 LOCATION Pier 23, SEC. 36, TWP. 4N, RNG. 10W
Lat 38.76192505 Long -90.16381082

COUNTY Madison DRILLING METHOD CFA, Mud Rotary HAMMER TYPE Automatic

STRUCT. NO. 060-0350 (EB)
Station 806+89.23

BORING NO. BB-56
Station 1828+83.45
Offset 35.8 ft R (EB)
Ground Surface Elev. 414.0 ft

Surface Water Elev. ft
Stream Bed Elev. ft

Groundwater Elev.:
First Encounter None. ft
Upon Completion ft
After Hrs. ft

Description	Elev.	Depth (ft)	Blows (/6")	UCS Qu (tsf)	Moist (%)
Weathered Limestone. *(continued)*	333.5				
Borehole continued with rock coring.		-85			
		-90			
		-95			
		-100			

The Unconfined Compressive Strength (UCS) Failure Mode is indicated by (B-Bulge, S-Shear, P-Penetrometer)
AASHTO Classifications are based on visual classifications unless otherwise noted BBS, form 137 (Rev. 8-99)

Illinois Department of Transportation
Division of Highways
sci engineering inc

ROCK CORE LOG

Page 1 of 2

Date 10/16/20

ROUTE FAI 270 DESCRIPTION I-270 over the Mississippi River LOGGED BY SCI

SECTION 60B-1 LOCATION Pier 23, SEC. 36, TWP. 4N, RNG. 10W
Lat 38.76192505 Long -90.16381082

COUNTY Madison CORING METHOD Conventional

STRUCT. NO. 060-0350 (EB) CORING BARREL TYPE & SIZE Solid Barrel NX
Station 806+89.23

Core Diameter 2.06 in
Top of Rock Elev. 335.5 ft
Begin Core Elev. 333.5 ft

BORING NO. BB-56
Station 1828+83.45
Offset 35.8 ft R (EB)
Ground Surface Elev. 414.0 ft

	DEPTH (ft)	CORE (#)	RECOVERY (%)	R.Q.D. (%)	CORE TIME (min/ft)	STRENGTH (tsf)	MOISTURE (%)
Limestone: Gray, moderately hard, aphanitic to very finely crystalline, banded to medium bedding, slightly to moderately weathered, dense. 333.5		1	100		4		
Depth 83.2 feet. Dry Density: 166.9 pcf.						1037.0	0.1
	-85						
Depth 89.8 feet. Dry Density: 166.9 pcf.	-90					1136.6	0.1
Thin to medium bedded.		2	100	83	3		
Depth 93.1 feet. Dry Density: 164.4 pcf.						504.4	0.1
	-95						
Depth 97.3 feet. Dry Density: 162.5 pcf.						811.5	0.1
313.5	-100						

Color pictures of the cores Yes
Cores will be stored for examination until completion
The "Strength" column represents the uniaxial compressive strength of the core sample (ASTM D-2938)

BBS, form 138 (Rev. 8-99)

Illinois Department of Transportation
Division of Highways
sci engineering inc

ROCK CORE LOG

Page 2 of 2

Date 10/16/20

ROUTE FAI 270 DESCRIPTION I-270 over the Mississippi River LOGGED BY SCI

SECTION 60B-1 LOCATION Pier 23, SEC. 36, TWP. 4N, RNG. 10W
Lat 38.76192505 Long -90.16381082

COUNTY Madison CORING METHOD Conventional

STRUCT. NO. 060-0350 (EB) CORING BARREL TYPE & SIZE Solid Barrel NX
Station 806+89.23

Core Diameter 2.06 in
Top of Rock Elev. 335.5 ft
Begin Core Elev. 333.5 ft

BORING NO. BB-56
Station 1828+83.45
Offset 35.8 ft R (EB)
Ground Surface Elev. 414.0 ft

	DEPTH (ft)	CORE (#)	RECOVERY (%)	R.Q.D. (%)	CORE TIME (min/ft)	STRENGTH (tsf)	MOISTURE (%)
Limestone: Gray, moderately hard, aphanitic to very finely crystalline, banded to medium bedding, moderately weathered, dense, cherty.		3	100	78	3.7		
Depth 103.9 feet. Dry Density: 151.9 pcf.						543.0	0.1
309.2	-105						
Boring terminated at 104.8 feet.							
	-110						
	-115						
	-120						

Color pictures of the cores Yes
Cores will be stored for examination until completion
The "Strength" column represents the uniaxial compressive strength of the core sample (ASTM D-2938)

BBS, form 138 (Rev. 8-99)

Illinois Department of Transportation
Division of Highways
sci engineering inc

SOIL BORING LOG

Page 1 of 1

Date 12/05/18

ROUTE FAI 270 DESCRIPTION I-270 over the Mississippi River LOGGED BY SCI

SECTION 60B-1 LOCATION SEC. 36, TWP. 4N, RNG. 10W
Lat 38.76177512 Long -90.16290325

COUNTY Madison DRILLING METHOD CFA, Mud Rotary HAMMER TYPE Automatic

STRUCT. NO. 060-0350 (EB)
Station 806+89.23

BORING NO. BB-48
Station 1831+46.47
Offset 7.9 ft R (EB)
Ground Surface Elev. 414.3 ft

Surface Water Elev. ft
Stream Bed Elev. ft

Groundwater Elev.:
First Encounter 406.8 ft ▼
Upon Completion ft
After Hrs. ft

Description	Elev.	DEPTH (ft)	BLOWS (/6")	UCS Qu (tsf)	MOIST (%)
Clay: Brown, medium stiff, A-7.					
Particle Size Analysis Test performed.			2 3 5	1.4 S/15	36
	409.8	-5	2 3 3	1.5 P	--
Sandy Loam: Brown, fine grained, medium dense, A-2.					
			2 3 4	NC	--
Grain Size Analysis Test performed.		-10	1 3 3	NC	--
	403.8				
Sand: Brown, fine grained, medium dense, A-3.			4 4 7	NC	--
		-15	6 7 7	NC	--
			3 4 8	NC	--
3.7% Passing the No. 200 Sieve.	394.3	-20	4 5 6	NC	--
Sand: Brown, fine grained, medium dense, A-3. *(continued)*			6 10 10	NC	--
		-25	7 11 11	NC	--
			13 17 15	NC	--
		-30	8 10 15	NC	--
		-35	8 10 13	NC	--
	377.3				
Sandy Loam: Gray, fine to coarse grained, medium dense, trace fine gravel, A-1. *Grain Size Analysis Test performed.*		-40	7 10 12	NC	--

The Unconfined Compressive Strength (UCS) Failure Mode is indicated by (B-Bulge, S-Shear, P-Penetrometer)
AASHTO Classifications are based on visual classifications unless otherwise noted BBS, form 137 (Rev. 8-99)

Illinois Department of Transportation
Division of Highways
sci engineering inc

SOIL BORING LOG

Page 2 of 1

Date 12/05/18

ROUTE FAI 270 DESCRIPTION I-270 over the Mississippi River LOGGED BY SCI

SECTION 60B-1 LOCATION SEC. 36, TWP. 4N, RNG. 10W
Lat 38.76177512 Long -90.16290325

COUNTY Madison DRILLING METHOD CFA, Mud Rotary HAMMER TYPE Automatic

STRUCT. NO. 060-0350 (EB)
Station 806+89.23

BORING NO. BB-48
Station 1831+46.47
Offset 7.9 ft R (EB)
Ground Surface Elev. 414.3 ft

Surface Water Elev. ft
Stream Bed Elev. ft

Groundwater Elev.:
First Encounter 406.8 ft ▼
Upon Completion ft
After Hrs. ft

Description	Elev.	DEPTH (ft)	BLOWS (/6")	UCS Qu (tsf)	MOIST (%)
Sandy Loam: Gray, fine to coarse grained, medium dense, trace fine gravel, A-1. *(continued)*					
	372.3				
Sand: Gray, fine grained, dense, A-2.					
		-45	14 16 17	NC	--
	367.3				
Sand: Gray, fine to coarse grained, medium dense, A-1. *2.6% Passing the No. 200 Sieve.*		-50	6 7 6	NC	--
		-55	9 11 13	NC	--
		-60	7 10 6	NC	--
Sand: Gray, fine to coarse grained, medium dense, A-1. *(continued)*					
		-65	18 10 9	NC	--
		-70	12 12 13	NC	--
	342.3				
Sand: Gray, fine grained, dense, A-2.					
	340.0	-75	15 15 41	NC	--
Gravel: Fine grained, dense, fine to coarse, A-1.	339.8				
Weathered Limestone: Gray.					
	337.3				
Sand: Gray, coarse grained, trace fine gravel, A-1.		-80	32 13 11	NC	--
			14 15 100/5"	NC	--
Borehole continued with rock coring.					

The Unconfined Compressive Strength (UCS) Failure Mode is indicated by (B-Bulge, S-Shear, P-Penetrometer)
AASHTO Classifications are based on visual classifications unless otherwise noted BBS, form 137 (Rev. 8-99)

Illinois Department of Transportation
Division of Highways
sci engineering inc

ROCK CORE LOG

Page 1 of 1

Date 12/05/18

ROUTE FAI 270 DESCRIPTION I-270 over the Mississippi River LOGGED BY SCI

SECTION 60B-1 LOCATION SEC. 36, TWP. 4N, RNG. 10W
Lat 38.76177512 Long -90.16290325

COUNTY Madison CORING METHOD Conventional

STRUCT. NO. 060-0350 (EB)
Station 806+89.23

CORING BARREL TYPE & SIZE Solid Barrel NX
Core Diameter 2.06 in
Top of Rock Elev. 333.8 ft
Begin Core Elev. 333.8 ft

BORING NO. BB-48
Station 1831+46.47
Offset 7.9 ft R (EB)
Ground Surface Elev. 414.3 ft

Description	Elev.	DEPTH (ft)	CORE (#)	RECOVERY (%)	R.Q.D. (%)	CORE TIME (min/ft)	STRENGTH (tsf)	MOISTURE (%)
Limestone: Gray, hard to very hard, very finely crystalline, banded to thinly bedded, slightly weathered, dense.	333.8		1	96	26	2.1		
		-85						
Thinly to medium bedded.								
3.5" Open vertical fracture.								
2" Open vertical fracture.		-90						
Depth 90.15', Dry Density: 167.5 pcf.	323.8						745.4	0.1
No recovery.			2	0	0	3.8		
		-95						
	318.8							
Boring terminated at 95.5 feet. Boring grouted to 95.5 feet.		-100						

Color pictures of the cores Yes
Cores will be stored for examination until completion
The "Strength" column represents the uniaxial compressive strength of the core sample (ASTM D-2938)
BBS, form 138 (Rev. 8-99)

Illinois Department of Transportation
Division of Highways
sci engineering inc

SOIL BORING LOG

Page 1 of 2

Date 10/14-15/2020

ROUTE FAI 270 DESCRIPTION I-270 over the Mississippi River LOGGED BY SCI

SECTION 60B-1 LOCATION Pier 24, SEC. 36, TWP. 4N, RNG. 10W
Lat 38.76176476 Long -90.16320494

COUNTY Madison DRILLING METHOD CFA, Mud Rotary HAMMER TYPE Automatic

STRUCT. NO. 060-0350 (EB)
Station 806+89.23

BORING NO. BB-58
Station 1830+65.81
Offset 38.0 ft R (EB)
Ground Surface Elev. 413.2 ft

Surface Water Elev. ft
Stream Bed Elev. ft

Groundwater Elev.:
First Encounter None. ft
Upon Completion ft
After Hrs. ft

Description	Elev.	DEPTH (ft)	BLOWS (/6")	UCS Qu (tsf)	MOIST (%)
Clay: Brown, soft, moist, with crushed limestone, fill, A-7.			2 3 4	1.7 B/20	37
Sand: Brown and gray, with clay, fine grained, loose, moist, fill, A-3.	409.2	-5	2 3 4	1.0 P	27
			3 4 4	0.5 P	26
Sand: Brown and gray, fine grained, medium dense, moist, A-3. *Grain Size Analysis performed.*	404.2	-10	4 5 8	NC	--
Sand: Gray, trace brown, medium dense, moist, A-1.	402.7		6 7 8	NC	--
		-15	6 7 6	NC	--
			3 4 6	NC	--
		-20	5 5 7	NC	--
Sand: Gray, trace brown, medium dense, moist, A-1. *(continued)* *Grain Size Analysis performed.*			4 6 10	NC	--
		-25	5 5 9	NC	--
			8 12 14	NC	--
		-30	4 6 10	NC	--
		-35	7 13 20	NC	--
Dense.		-40	6 9 16	NC	--
Medium dense.	373.2				

The Unconfined Compressive Strength (UCS) Failure Mode is indicated by (B-Bulge, S-Shear, P-Penetrometer)
AASHTO Classifications are based on visual classifications unless otherwise noted BBS, form 137 (Rev. 8-99)

Illinois Department of Transportation
Division of Highways
sci engineering inc

SOIL BORING LOG

Page 2 of 2

Date 10/14-15/2020

ROUTE FAI 270 DESCRIPTION I-270 over the Mississippi River LOGGED BY SCI

SECTION 60B-1 LOCATION Pier 24, SEC. 36, TWP. 4N, RNG. 10W
Lat 38.76176476 Long -90.16320494

COUNTY Madison DRILLING METHOD CFA, Mud Rotary HAMMER TYPE Automatic

STRUCT. NO. 060-0350 (EB)
Station 806+89.23

BORING NO. BB-58
Station 1830+65.81
Offset 38.0 ft R (EB)
Ground Surface Elev. 413.2 ft

Surface Water Elev. ft
Stream Bed Elev. ft

Groundwater Elev.:
First Encounter None. ft
Upon Completion ft
After Hrs. ft

Description	Elev.	DEPTH (ft)	BLOWS (/6")	UCS Qu (tsf)	MOIST (%)
Sand: Gray, trace brown, medium dense to dense, moist, A-1.			6 8 7	NC	--
		-45	7 5 10	NC	--
		-50	10 14 20	NC	--
		-55	6 10 14	NC	--
Sand: Gray, trace brown, medium dense to dense, moist, A-1. *(continued)*			25 33 16	NC	--
		-65	11 11 12	NC	--
		-70	16 8 9	NC	--
		-75			
Weathered Limestone.	334.7	-80			

The Unconfined Compressive Strength (UCS) Failure Mode is indicated by (B-Bulge, S-Shear, P-Penetrometer)
AASHTO Classifications are based on visual classifications unless otherwise noted BBS, form 137 (Rev. 8-99)

Illinois Department of Transportation
Division of Highways
sci engineering inc

SOIL BORING LOG

Page 3 of 2

Date 10/14-15/2020

ROUTE FAI 270 DESCRIPTION I-270 over the Mississippi River LOGGED BY SCI

SECTION 60B-1 LOCATION Pier 24, SEC. 36, TWP. 4N, RNG. 10W
Lat 38.76176476 Long -90.16320494

COUNTY Madison DRILLING METHOD CFA, Mud Rotary HAMMER TYPE Automatic

STRUCT. NO. 060-0350 (EB)
Station 806+89.23

BORING NO. BB-58
Station 1830+65.81
Offset 38.0 ft R (EB)
Ground Surface Elev. 413.2 ft

Surface Water Elev. ft
Stream Bed Elev. ft

Groundwater Elev.:
First Encounter None. ft
Upon Completion ft
After Hrs. ft

Description	Elev.	DEPTH (ft)	BLOWS (/6")	UCS Qu (tsf)	MOIST (%)
Weathered Limestone. *(continued)*	332.2				
Borehole continued with rock coring.		-85			
		-90			
		-95			
		-100			

The Unconfined Compressive Strength (UCS) Failure Mode is indicated by (B-Bulge, S-Shear, P-Penetrometer)
AASHTO Classifications are based on visual classifications unless otherwise noted BBS, form 137 (Rev. 8-99)

Illinois Department of Transportation
Division of Highways
sci engineering inc

ROCK CORE LOG

Date 10/14-15/2020

ROUTE FAI 270 **DESCRIPTION** I-270 over the Mississippi River **LOGGED BY** SCI

SECTION 60B-1 **LOCATION** Pier 24, **SEC.** 36, **TWP.** 4N, **RNG.** 10W
Lat 38.76176476 **Long** -90.16320494

COUNTY Madison **CORING METHOD** Conventional

STRUCT. NO. 060-0350 (EB)
Station 806+89.23

CORING BARREL TYPE & SIZE Solid Barrel NX

Core Diameter 2.06 in
Top of Rock Elev. 334.7 ft
Begin Core Elev. 332.2 ft

BORING NO. BB-58
Station 1830+65.81
Offset 38.0 ft R (EB)
Ground Surface Elev. 413.2 ft

	DEPTH (ft)	CORE (#)	RECOVERY (%)	R.Q.D. (%)	CORE TIME (min/ft)	STRENGTH (tsf)	MOISTURE (%)
Limestone: Gray, hard, aphanitic to very finely crystalline, thin bedding, slightly to moderately weathered, dense. 332.2		1	100	37	2.6		
Depth 82.2 feet. Dry Density: 167.6 pcf.						674.5	0.1
	-85						
Depth 89.4 feet. Dry Density: 167.4 pcf.	-90					768.3	0.1
Banded to thinly bedded, very finely crystalline to finely crystalline.		2	100	95	2.6		
Depth 93.6 feet. Dry Density: 160.2 pcf.	-95					508.8	0.2
Depth 97.7 feet. Dry Density: 167.0 pcf.	-100					856.6	0.1
312.2							

Color pictures of the cores Yes
Cores will be stored for examination until completion
The "Strength" column represents the uniaxial compressive strength of the core sample (ASTM D-2938)

BBS, form 138 (Rev. 8-99)

Illinois Department of Transportation
Division of Highways
sci engineering inc

ROCK CORE LOG

Date 10/14-15/2020

ROUTE FAI 270 **DESCRIPTION** I-270 over the Mississippi River **LOGGED BY** SCI

SECTION 60B-1 **LOCATION** Pier 24, **SEC.** 36, **TWP.** 4N, **RNG.** 10W
Lat 38.76176476 **Long** -90.16320494

COUNTY Madison **CORING METHOD** Conventional

STRUCT. NO. 060-0350 (EB)
Station 806+89.23

CORING BARREL TYPE & SIZE Solid Barrel NX

Core Diameter 2.06 in
Top of Rock Elev. 334.7 ft
Begin Core Elev. 332.2 ft

BORING NO. BB-58
Station 1830+65.81
Offset 38.0 ft R (EB)
Ground Surface Elev. 413.2 ft

	DEPTH (ft)	CORE (#)	RECOVERY (%)	R.Q.D. (%)	CORE TIME (min/ft)	STRENGTH (tsf)	MOISTURE (%)
Limestone: Gray, hard, aphanitic to very finely crystalline, thin bedding, slightly weathered, dense.		3	100	75	3		
Depth 101.6 feet. Dry Density: 167.5 pcf.						1166.2	0.1
	-105						
Depth 109.5 feet. Dry Density: 165.3 pcf.	-110					982.3	0.1
302.2							
Boring terminated at 111.0 feet.							
	-115						
	-120						

Color pictures of the cores Yes
Cores will be stored for examination until completion
The "Strength" column represents the uniaxial compressive strength of the core sample (ASTM D-2938)

BBS, form 138 (Rev. 8-99)

Illinois Department of Transportation
Division of Highways
sci engineering inc

SOIL BORING LOG

Page 1 of 3

Date 9/17-18/2018

ROUTE FAI 270 DESCRIPTION I-270 over the Mississippi River LOGGED BY SCI

SECTION 60B-1 LOCATION East Abutment SEC. 36 TWP. 4N RNG. 10W
Lat 38.76139275 Long -90.16235709

COUNTY Madison DRILLING METHOD HSA, Mud Rotary HAMMER TYPE Automatic

STRUCT. NO. 060-0350 (EB)
Station 806+89.23

BORING NO. BB-50
Station 1833+37.59
Offset 92.3 ft R (EB)
Ground Surface Elev. 426.6 ft

Surface Water Elev. ft
Stream Bed Elev. ft

Groundwater Elev.:
First Encounter 405.6 ft ▼
Upon Completion ft
After Hrs. ft

Description	Elev.	Depth (ft)	Blows (/6")	UCS Qu (tsf)	Moist (%)
Clay: Brown, stiff, moist, fill, A-7.			6 7 8	4.5 P	21
	423.6				
Silty Clay Loam: Brown and gray, medium stiff, moist, fill, A-6.		-5	5 7 7	4.5 P	15
	420.1				
Clay: Brown, medium stiff, moist, fill, A-7.	419.6		3 3 3	1.6 S/15	32
Silty Loam: Brown, medium stiff to stiff, moist, fill, A-4.		-10	3 4 5	NC	18
	415.1				
Silty Loam: Brown, medium stiff, very moist, A-4.			4 3 2	0.4 S/10	27
	413.6				
Clay: Brown, medium stiff, moist, A-7.		-15	3 2 4	1.4 B/20	36
	411.1				
Sand: Brown, fine grained, very loose, moist, A-2.			3 2 1	0.5 P	--
	409.6				
Silt: Brown, soft, moist, A-4.					
	407.9				
Sand: Brown, fine to coarse grained, medium dense to dense, A-2.		-20	4 7 7	NC	--
Sand: Brown, fine to coarse grained, medium dense to dense, A-2. *(continued)* Fine grained.			6 8 10	NC	--
		-25	6 9 10	NC	--
			9 8 8	NC	--
	398.6				
Sandy Loam: Brown, fine grained, medium dense to dense, A-2.		-30	5 9 11	NC	--
20.7% Finer than the No. 200 Sieve.		-35	6 4 5	NC	--
	389.6				
Sand: Brown, fine grained, medium dense to dense, A-2.		-40	10 11 12	NC	--
	386.6				

The Unconfined Compressive Strength (UCS) Failure Mode is indicated by (B-Bulge, S-Shear, P-Penetrometer)
AASHTO Classifications are based on visual classifications unless otherwise noted BBS, form 137 (Rev. 8-99)

Illinois Department of Transportation
Division of Highways
sci engineering inc

SOIL BORING LOG

Page 2 of 3

Date 9/17-18/2018

ROUTE FAI 270 DESCRIPTION I-270 over the Mississippi River LOGGED BY SCI

SECTION 60B-1 LOCATION East Abutment SEC. 36 TWP. 4N RNG. 10W
Lat 38.76139275 Long -90.16235709

COUNTY Madison DRILLING METHOD HSA, Mud Rotary HAMMER TYPE Automatic

STRUCT. NO. 060-0350 (EB)
Station 806+89.23

BORING NO. BB-50
Station 1833+37.59
Offset 92.3 ft R (EB)
Ground Surface Elev. 426.6 ft

Surface Water Elev. ft
Stream Bed Elev. ft

Groundwater Elev.:
First Encounter 405.6 ft ▼
Upon Completion ft
After Hrs. ft

Description	Elev.	Depth (ft)	Blows (/6")	UCS Qu (tsf)	Moist (%)
Sand: Brown, fine grained, medium dense to dense, A-2. *(Continued)*					
Trace coal.		-45	9 11 12	NC	--
Fine to coarse grained.		-50	13 20 17	NC	--
		-55	8 6 9	NC	--
	366.6	-60	11 12 13	NC	--
Sand: Brown, fine to coarse grained, dense, A-2. (Continued) Gray, dense.					
Fine grained.		-65	11 21 18	NC	--
		-70	8 22 18	NC	--
	354.6				
Sand: Gray, fine to coarse grained, medium dense, trace fine gravel, A-1.		-75	5 3 10	NC	--
	349.6				
Sand: Gray, fine to coarse grained, very dense, A-2.		-80	12 18 32	NC	--

The Unconfined Compressive Strength (UCS) Failure Mode is indicated by (B-Bulge, S-Shear, P-Penetrometer)
AASHTO Classifications are based on visual classifications unless otherwise noted BBS, form 137 (Rev. 8-99)

Illinois Department of Transportation
Division of Highways
sci engineering inc

SOIL BORING LOG

Page 3 of 3

Date 9/17-18/2018

ROUTE FAI 270 DESCRIPTION I-270 over the Mississippi River LOGGED BY SCI

SECTION 60B-1 LOCATION East Abutment SEC. 36 TWP. 4N RNG. 10W
Lat 38.76139275 Long -90.16235709

COUNTY Madison DRILLING METHOD HSA, Mud Rotary HAMMER TYPE Automatic

STRUCT. NO. 060-0350 (EB)
Station 806+89.23

BORING NO. BB-50
Station 1833+37.59
Offset 92.3 ft R (EB)
Ground Surface Elev. 426.6 ft

Surface Water Elev. ft
Stream Bed Elev. ft

Groundwater Elev.:
First Encounter 405.6 ft ▼
Upon Completion ft
After Hrs. ft

Description	Elev.	Depth (ft)	Blows (/6")	UCS Qu (tsf)	Moist (%)
Sand: Gray, fine to coarse grained, dense to very dense, with fine gravel, A-1. *End of drilling at 80 feet on 9/17.*					
		-85	35 23 24	NC	--
Trace fine gravel.		-90	18 21 24	NC	--
		-95	20 21 29	NC	--
	331.3				
Weathered Limestone: Gray.	330.6				
Boring terminated at 96.0 feet. Boring grouted to 96 feet.		-100	100/1"	NC	--

The Unconfined Compressive Strength (UCS) Failure Mode is indicated by (B-Bulge, S-Shear, P-Penetrometer)
AASHTO Classifications are based on visual classifications unless otherwise noted BBS, form 137 (Rev. 8-99)

Illinois Department of Transportation
Division of Highways
sci engineering inc

SOIL BORING LOG

Date 10/13-14/2020

ROUTE FAI 270 DESCRIPTION I-270 over the Mississippi River LOGGED BY SCI

SECTION 60B-1 LOCATION Pier 25, SEC. 36, TWP. 4N, RNG. 10W
Lat 38.76159593 Long -90.16259632

COUNTY Madison DRILLING METHOD CFA, Mud Rotary HAMMER TYPE Automatic

STRUCT. NO. 060-0350 (EB)
Station 806+89.23

BORING NO. BB-59
Station 1832+49.87
Offset 42.9 ft R (EB)
Ground Surface Elev. 412.3 ft

Surface Water Elev. ft
Stream Bed Elev. ft

Groundwater Elev.:
First Encounter None. ft
Upon Completion ft
After Hrs. ft

Description	Elev.	DEPTH (ft)	BLOWS (/6")	UCS Qu (tsf)	MOIST (%)
Clay: Dark brown, medium stiff to stiff, moist, fill, A-7.			2 3 5	1.8 B/20	19
	409.3				
Sandy Loam: Brown, medium stiff to stiff, moist, A-4. *Grain Size Analysis performed.*		-5	2 3 5	NC	--
	406.8				
Sand: Brown, fine-grained, medium dense to dense, moist, A-3.			3 5 7	NC	--
		-10	5 6 9	NC	--
			5 6 8	NC	--
		-15	6 7 7	NC	--
			4 6 7	NC	--
		-20	4 5 6	NC	--
Sand: Brown, fine-grained, medium dense to dense, moist, A-3. *(continued)*			6 7 9	NC	--
		-25	6 7 7	NC	--
			8 16 11	NC	--
		-30	7 10 11	NC	--
		-35	7 15 18	NC	--
Gray.		-40	12 12 9	NC	--
	372.3				

The Unconfined Compressive Strength (UCS) Failure Mode is indicated by (B-Bulge, S-Shear, P-Penetrometer)
AASHTO Classifications are based on visual classifications unless otherwise noted BBS, form 137 (Rev. 8-99)

Illinois Department of Transportation
Division of Highways
sci engineering inc

SOIL BORING LOG

Date 10/13-14/2020

ROUTE FAI 270 DESCRIPTION I-270 over the Mississippi River LOGGED BY SCI

SECTION 60B-1 LOCATION Pier 25, SEC. 36, TWP. 4N, RNG. 10W
Lat 38.76159593 Long -90.16259632

COUNTY Madison DRILLING METHOD CFA, Mud Rotary HAMMER TYPE Automatic

STRUCT. NO. 060-0350 (EB)
Station 806+89.23

BORING NO. BB-59
Station 1832+49.87
Offset 42.9 ft R (EB)
Ground Surface Elev. 412.3 ft

Surface Water Elev. ft
Stream Bed Elev. ft

Groundwater Elev.:
First Encounter None. ft
Upon Completion ft
After Hrs. ft

Description	Elev.	DEPTH (ft)	BLOWS (/6")	UCS Qu (tsf)	MOIST (%)
Sand: Gray, fine-grained, medium dense to dense, moist, A-3.			9 16 9	NC	--
		-45			
		-50	9 5 6	NC	--
		-55	7 12 13	NC	--
		-60	5 6 12	NC	---
Sand: Gray, fine-grained, medium dense to dense, moist, A-3. *(continued)*			12 14 33	NC	--
		-65			
		-70	6 17 50/4"	NC	--
		-75	12 14 18	NC	--
Weathered Limestone	333.8		50/3"	NC	--
	332.3	-80			

Borehole continued with rock coring.

The Unconfined Compressive Strength (UCS) Failure Mode is indicated by (B-Bulge, S-Shear, P-Penetrometer)
AASHTO Classifications are based on visual classifications unless otherwise noted BBS, form 137 (Rev. 8-99)

Illinois Department of Transportation
Division of Highways
sci engineering inc

ROCK CORE LOG

Date 10/13-14/2020

ROUTE FAI 270 DESCRIPTION I-270 over the Mississippi River LOGGED BY SCI

SECTION 60B-1 LOCATION Pier 25, SEC. 36, TWP. 4N, RNG. 10W
Lat 38.76159593 Long -90.16259632

COUNTY Madison CORING METHOD Conventional

CORING BARREL TYPE & SIZE Solid Barrel NX
Core Diameter 2.06 in
Top of Rock Elev. 333.8 ft
Begin Core Elev. 332.3 ft

STRUCT. NO. 060-0350 (EB)
Station 806+89.23

BORING NO. BB-59
Station 1832+49.87
Offset 42.9 ft R (EB)
Ground Surface Elev. 412.3 ft

Description	Elev.	DEPTH (ft)	CORE (#)	RECOVERY (%)	R.Q.D. (%)	CORE TIME (min/ft)	STRENGTH (tsf)	MOISTURE (%)
Limestone: Gray, hard, very finely crystalline, thin to medium bedding, slightly weathered, dense.	332.3		1	83	75	1.9		
Depth 84.2 feet. Dry Density: 170.3 pcf.		-85					621.3	0.1
Depth 86.7 feet. Dry Density: 172.8 pcf.		-90					817.9	0.1
			2	18	11	0.7		
Depth 91.2 feet. Dry Density: 167.3 pcf.							1099.5	0.1
	318.3							
Void.		-95						
	315.3							
Limestone: Gray, hard, very finely crystalline, thin to medium bedding, slightly weathered, dense.		-100						
	312.3							

Color pictures of the cores Yes
Cores will be stored for examination until completion
The "Strength" column represents the uniaxial compressive strength of the core sample (ASTM D-2938)
BBS, form 138 (Rev. 8-99)

Illinois Department of Transportation
Division of Highways
sci engineering inc

ROCK CORE LOG

Date 10/13-14/2020

ROUTE FAI 270 DESCRIPTION I-270 over the Mississippi River LOGGED BY SCI

SECTION 60B-1 LOCATION Pier 25, SEC. 36, TWP. 4N, RNG. 10W
Lat 38.76159593 Long -90.16259632

COUNTY Madison CORING METHOD Conventional

STRUCT. NO. 060-0350 (EB) CORING BARREL TYPE & SIZE Solid Barrel NX
Station 806+89.23

Core Diameter 2.06 in
Top of Rock Elev. 333.8 ft
Begin Core Elev. 332.3 ft

BORING NO. BB-59
Station 1832+49.87
Offset 42.9 ft R (EB)
Ground Surface Elev. 412.3 ft

	DEPTH (ft)	CORE (#)	RECOVERY (%)	R.Q.D. (%)	CORE TIME (min/ft)	STRENGTH (tsf)	MOISTURE (%)
Limestone: Gray, hard, very finely crystalline, thin to medium bedding, slightly weathered, dense.		3	100	82	2.5		
Depth 102.4 feet. Dry Density: 167.4 pcf.						207.7	0.1
	-105						
Depth 107.0 feet. Dry Density: 169.4 pcf.						978.7	0.2
	302.3 -110						
Boring terminated at 110.0 feet.							
	-115						
	-120						

Color pictures of the cores Yes
Cores will be stored for examination until completion
The "Strength" column represents the uniaxial compressive strength of the core sample (ASTM D-2938)

BBS, form 138 (Rev. 8-99)

Illinois Department of Transportation
Division of Highways
sci engineering inc

SOIL BORING LOG

Page 1 of 2

Date 09/18/18

ROUTE FAI 270 DESCRIPTION I-270 over the Mississippi River LOGGED BY SCI

SECTION 60B-1 LOCATION East Approach, SEC. 36, TWP. 4N, RNG. 10W
Lat 38.7612376 Long -90.16193083

COUNTY Madison DRILLING METHOD HSA HAMMER TYPE Automatic

STRUCT. NO. 060-0350 (EB)
Station 806+89.23

BORING NO. B-111
Station 1834+70.65
Offset 108.5 ft R (EB)
Ground Surface Elev. 419.1 ft

Surface Water Elev. ft
Stream Bed Elev. ft

Groundwater Elev.:
First Encounter 405.6 ft ▼
Upon Completion ft
After Hrs. ft

Description	Elev.	DEPTH (ft)	BLOWS (/6")	UCS Qu (tsf)	MOIST (%)
Silty Clay Loam: Brown, very stiff, moist, fill, A-6.	417.6		5 7 9	2.5 P	--
Sand: Brown, fine grained, medium dense, moist, fill, A-2.	416.1				
Sandy Loam: Gray and brown, stiff, moist, fill, A-2.	413.6	-5	6 6 9	1.4 S/15	--
Silty Loam: Brown, medium stiff, very moist, A-4.	412.4		2 2 4	0.5 P	32
Clay: Brown, medium stiff to stiff, moist, A-7.		-10	3 4 6	1.3 S/15	38
Silty Loam: Brown and gray, medium stiff, very moist, A-4.	408.6		2 2 4	0.5 P	31
Sand: Brown, fine grained, medium dense, wet, A-2.	406.1	-15	4 5 10	NC	--
			6 11 10	NC	--
		-20	7 10 14	NC	--
Sand: Brown, fine grained, medium dense, wet, A-2. *(continued)*			9 9 12	NC	--
		-25	6 9 12	NC	--
			7 8 9	NC	--
		-30	9 10 11	NC	--
		-35	6 7 9	NC	--
		-40	9 13 14	NC	--

The Unconfined Compressive Strength (UCS) Failure Mode is indicated by (B-Bulge, S-Shear, P-Penetrometer)
AASHTO Classifications are based on visual classifications unless otherwise noted BBS, form 137 (Rev. 8-99)

Illinois Department of Transportation
Division of Highways
sci engineering inc

SOIL BORING LOG

Page 2 of 2

Date 09/18/18

ROUTE FAI 270 DESCRIPTION I-270 over the Mississippi River LOGGED BY SCI

SECTION 60B-1 LOCATION East Approach, SEC. 36, TWP. 4N, RNG. 10W
Lat 38.7612376 Long -90.16193083

COUNTY Madison DRILLING METHOD HSA HAMMER TYPE Automatic

STRUCT. NO. 060-0350 (EB)
Station 806+89.23

BORING NO. B-111
Station 1834+70.65
Offset 108.5 ft R (EB)
Ground Surface Elev. 419.1 ft

Surface Water Elev. ft
Stream Bed Elev. ft

Groundwater Elev.:
First Encounter 405.6 ft ▼
Upon Completion ft
After Hrs. ft

Description	Elev.	DEPTH (ft)	BLOWS (/6")	UCS Qu (tsf)	MOIST (%)
Sand: Brown, fine grained, medium dense, wet, A-2. *(continued)*	377.1				
Sand: Brown, fine to coarse grained, medium dense, trace fine gravel, wet, A-1.		-45	5 8 10	NC	--
Gray.	369.1	-50	5 9 8	NC	--
Boring terminated at 50.0 feet. Boring grouted to 50 feet.		-55			
		-60			

The Unconfined Compressive Strength (UCS) Failure Mode is indicated by (B-Bulge, S-Shear, P-Penetrometer)
AASHTO Classifications are based on visual classifications unless otherwise noted BBS, form 137 (Rev. 8-99)

Illinois Department of Transportation
Division of Highways
sci engineering inc

SOIL BORING LOG

Page 1 of 1

Date 09/19/18

ROUTE FAI 270 DESCRIPTION I-270 over the Mississippi River LOGGED BY SCI

SECTION 60B-1 LOCATION East Approach, SEC. 36, TWP. 4N, RNG. 10W
Lat 38.76092513 Long -90.16052451

COUNTY Madison DRILLING METHOD HSA HAMMER TYPE Automatic

STRUCT. NO. 060-0350 (EB)
Station 806+89.23

BORING NO. B-113
Station 1838+81.05
Offset 100.2 ft R (EB)
Ground Surface Elev. 416.5 ft

Surface Water Elev. ft
Stream Bed Elev. ft

Groundwater Elev.:
First Encounter 404.0 ft ▼
Upon Completion ft
After Hrs. ft

Description	Elev.	DEPTH (ft)	BLOWS (/6")	UCS Qu (tsf)	MOIST (%)
Silty Clay Loam: Brown, stiff, moist, fill, A-6.	413.5		3 4 8	2.5 P	21
Clay: Gray and brown, stiff, moist, A-7.	411.0	-5	5 5 7	2.2 S/10	33
Sand: Brown, fine grained, medium dense, moist, A-2.	406.0		4 5 5	NC	--
		-10	4 5 5	NC	--
Silty Clay: Gray brown, soft, moist, A-6.	404.0 ▼		2 1 3	0.4 B/20	35
Sand: Brown, fine grained, loose, wet, A-2. *15.4% Passing the No. 200 Sieve.*	401.5	-15	ST	NC	--
Sandy Loam: Gray and brown, fine grained, loose, wet A-4.	398.5		2 3 3	NC	--
Sand: Brown, fine grained, loose, wet, A-2.		-20	3 3 6	NC	--
Sand: Brown, fine grained, loose, wet, A-2. *(continued)* Gray.			3 3 4	NC	--
		-25	4 3 4	NC	--
Boring terminated at 25.0 feet. Boring grouted to 25 feet.		-30			
		-35			
		-40			

The Unconfined Compressive Strength (UCS) Failure Mode is indicated by (B-Bulge, S-Shear, P-Penetrometer)
AASHTO Classifications are based on visual classifications unless otherwise noted BBS, form 137 (Rev. 8-99)

Illinois Department of Transportation
Division of Highways
sci engineering inc

SOIL BORING LOG

Page 1 of 1

Date 09/19/18

ROUTE FAI 270 DESCRIPTION I-270 over the Mississippi River LOGGED BY SCI

SECTION 60B-1 LOCATION East Approach, SEC. 36, TWP. 4N, RNG. 10W
Lat 38.76118844 Long -90.16113571

COUNTY Madison DRILLING METHOD HSA HAMMER TYPE Automatic

STRUCT. NO. 060-0350 (EB)
Station 806+89.23

BORING NO. B-118
Station 1836+91.35
Offset 55.8 ft R (EB)
Ground Surface Elev. 425.4 ft

Surface Water Elev. ft
Stream Bed Elev. ft

Groundwater Elev.:
First Encounter 413.9 ft ▼
Upon Completion ft
After Hrs. ft

Description	Elev.	DEPTH (ft)	BLOWS (/6")	UCS Qu (tsf)	MOIST (%)
Silty Clay: Brown, medium stiff to stiff, moist, fill, A-6.	424.4				
Sand: Brown, fine grained, medium dense, moist, fill, A-2.	423.4		3 4 8	1.5 P	--
Silty Loam: Dark gray, medium stiff to stiff, trace slag, moist, fill, A-4.	422.4				
Silty Clay: Brown, medium stiff, moist, A-6.	420.9	-5	2 2 3	0.3 P	17
Clay: Brown, medium stiff, moist, A-7. *One-Dimensional Consolidation and Atterberg Limits Tests performed.*	417.4		ST	1.0 P	39
Sand: Brown, fine grained, loose to medium dense, moist to wet, A-2.		-10	4 3 5	NC	--
		▼	4 5 6	NC	--
		-15	4 5 6	NC	--
			4 7 11	NC	--
		-20	8 7 9	NC	--
Sand: Brown, fine grained, loose to medium dense, moist to wet, A-2. *(continued)*			3 4 5	NC	--
			7 3 8	NC	--
	400.4	-25			
Boring terminated at 25.0 feet. Boring grouted to 25 feet.		-30			
		-35			
		-40			

The Unconfined Compressive Strength (UCS) Failure Mode is indicated by (B-Bulge, S-Shear, P-Penetrometer)
AASHTO Classifications are based on visual classifications unless otherwise noted BBS, form 137 (Rev. 8-99)