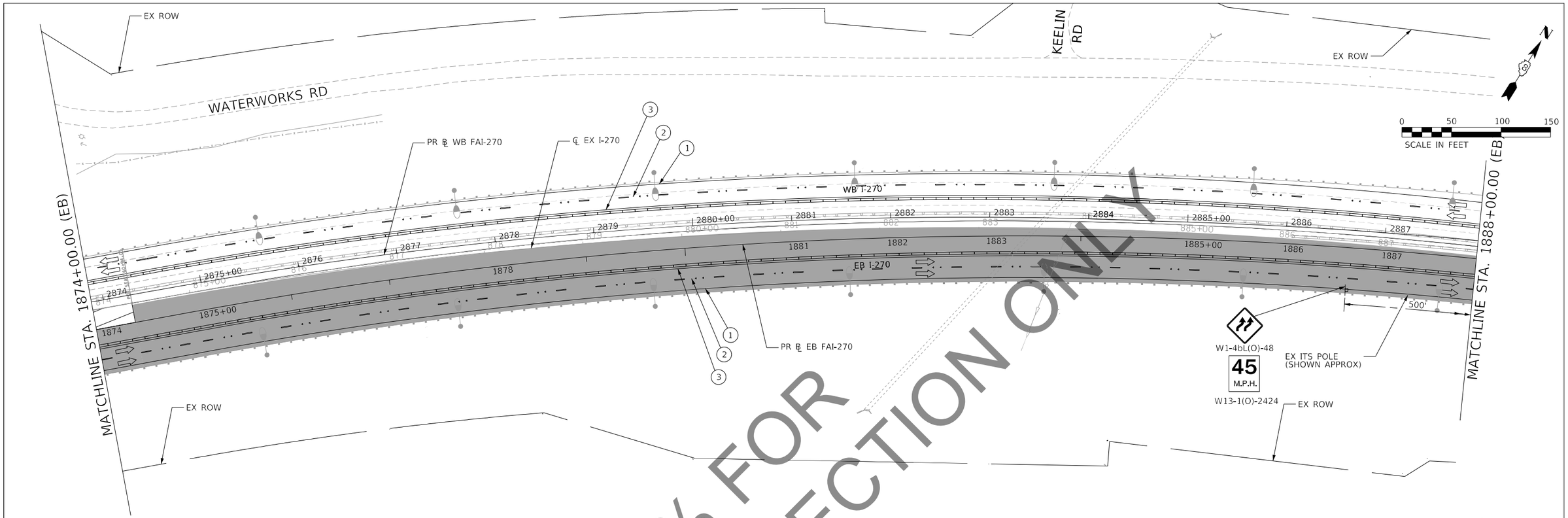

WB-3
PC STA. = 134+29.03
PT STA. = 165+17.88
PI STA. = 153+46.70
Δ = 29°48'11.10"(RT)
D = 1°14'34.29"
R = 4,610.00'
T = 1,226.76'
L = 2,397.95'
E =
e = ____
T.R. = ____
S.E. RUN = ____

EB-2
PC STA. = 170+21.91
PT STA. = 193+89.94
PI STA. = 182+37.85
Δ = °'"(RT)
D = °'"
R = '
T = '
L = '
E =
e = ____
T.R. = ____
S.E. RUN = ____

MAINTENANCE OF TRAFFIC LEGEND

- COMPLETED CONSTRUCTION
- WORK ZONE
- TEMPORARY PAVEMENT
- TEMPORARY PAVEMENT PLACED IN PREVIOUS STAGE
- TRAFFIC FLOW
- EXISTING/PROPOSED SIGN
- TYPE II BARRICADES OR DRUMS WITH BI-DIRECTIONAL STEADY BURN LIGHT AT 50' C-C (TYP.) 25' C-C IN CURVES AND RADII, AND 20' C-C IN TAPERS
- TYPE III BARRICADE
- TEMPORARY CONCRETE BARRIER
- TEMPORARY SHEET PILING
- IMPACT ATTENUATOR TL-3
- EXISTING/PROPOSED LIGHT POLE

MODEL: Default
FILE NAME: C:\CS4PDF\99390\45086_130\D876\90-sht-mot-PH1D-08.dgn

HORNER & SHIFRIN
Teaming with: PARSONS

USER NAME = PWICS$	DESIGNED - RO	REVISED -	
	DRAWN - SQ	REVISED -	
PLOT SCALE = 50.0000 ' / in.	CHECKED - JB	REVISED -	
PLOT DATE = 11/12/2021	DATE - 2021/07/27	REVISED -	

STATE OF ILLINOIS
DEPARTMENT OF TRANSPORTATION

FAI 270 TRAFFIC CONTROL PLAN
PHASE 1D

SCALE: 1" = 50' | SHEET 8 OF 9 SHEETS | STA. 874+00.00 TO STA. 901+50.00

F.A. RTE.	SECTION	COUNTY	TOTAL SHEETS	SHEET NO.
270	60B-1	MADISON	860	10/13
		CONTRACT NO. 76J90		
	ILLINOIS	FED. AID PROJECT		

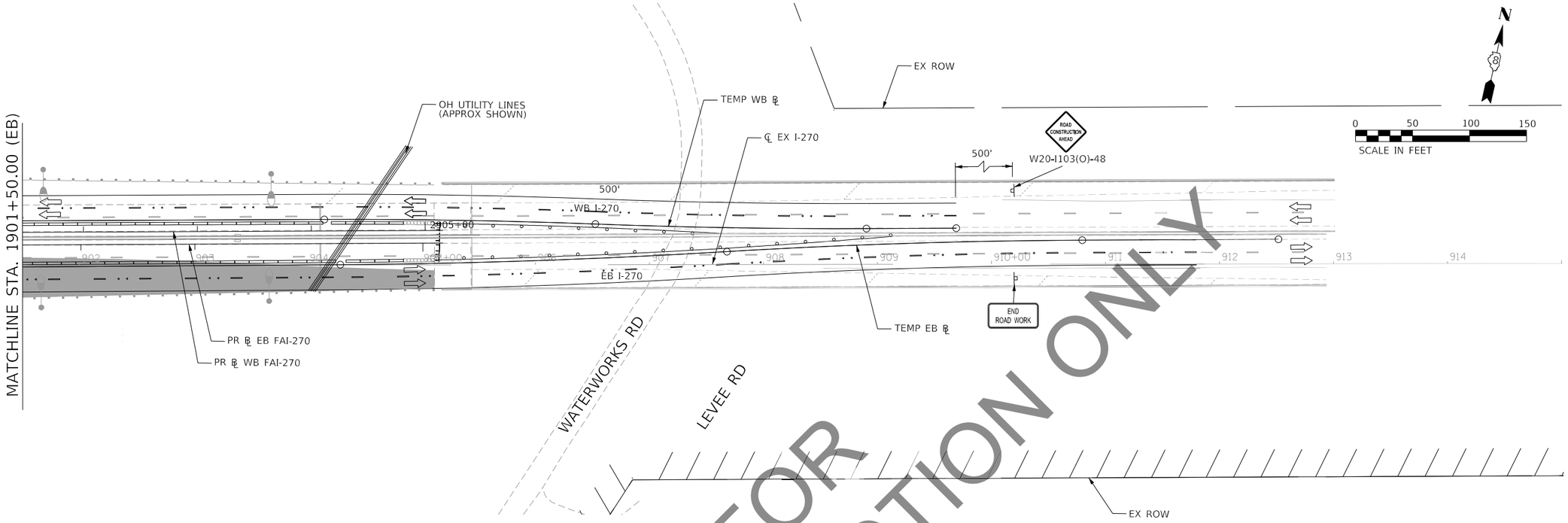

EB-3
PC STA. = 199+35.02
PRC STA. = 202+74.44
PI STA. =201+04.77
Δ = 3°02'19.23"(LT)
D = 0°53'42.89"
R = 6,400'
T = 169.75'
L = 339.42'
E =
e = ____
T.R. = ____
S.E. RUN = ____

EB-4
PRC STA. = 202+74.44
PT STA. = 205+86.36
PI STA. = 204+30.44
Δ = 3°11'28.98"(RT)
D = 1°01'23.30"
R = 5,600'
T = 156.00'
L = 311.92'
E =
e = ____
T.R. = ____
S.E. RUN = ____

WB-4
PC STA. = 170+89.05
PRC STA. = 173+26.89
PI STA. = 172+07.99
Δ = 2°26'00.41"(RT)
D = 1°01'23.30"
R = 5,600'
T = 118.94'
L = 237.84'
E =
e = ____
T.R. = ____
S.E. RUN = ____

WB-5
PRC STA. = 173+26.89
PT STA. = 175+64.73
PI STA. = 174+45.83
Δ = 2°26'00.41"(LT)
D = 1°01'23.30"
R = 5,600'
T = 118.94'
L = 237.84'
E =
e = ____
T.R. = ____
S.E. RUN = ____

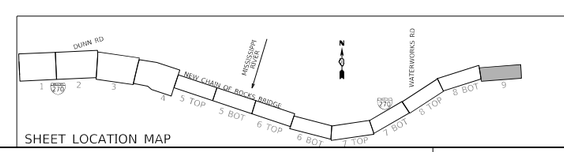

SHEET LOCATION MAP

MAINTENANCE OF TRAFFIC LEGEND

- COMPLETED CONSTRUCTION
- WORK ZONE
- TEMPORARY PAVEMENT
- TEMPORARY PAVEMENT PLACED IN PREVIOUS STAGE
- TRAFFIC FLOW
- EXISTING/PROPOSED SIGN
- TYPE II BARRICADES OR DRUMS WITH BI-DIRECTIONAL STEADY BURN LIGHT AT 50' C-C (TYP.) 25' C-C IN CURVES AND RADII, AND 20' C-C IN TAPERS
- TYPE III BARRICADE
- TEMPORARY CONCRETE BARRIER
- TEMPORARY SHEET PILING
- IMPACT ATTENUATOR TL-3
- EXISTING/PROPOSED LIGHT POLE

MODEL: Default
FILE NAME: C:\CS4PDF\9939\45086_1310D76\90-ch-mot-PH1D-09.dgn

HORNER & SHIFRIN
Teaming with: PARSONS

USER NAME = PWICS$	DESIGNED - RO	REVISED -	
	DRAWN - SQ	REVISED -	
PLOT SCALE = 50.0000 ' / in.	CHECKED - JB	REVISED -	
PLOT DATE = 11/12/2021	DATE - 2021/07/27	REVISED -	

STATE OF ILLINOIS
DEPARTMENT OF TRANSPORTATION

FAI 270 TRAFFIC CONTROL PLAN
PHASE 1D

SCALE: 1" = 50' | SHEET 9 OF 9 SHEETS | STA. 1901+50.00 TO STA.

F.A. RTE.	SECTION	COUNTY	TOTAL SHEETS	SHEET NO.
270	60B-1	MADISON	860	102

CONTRACT NO. 76J90
ILLINOIS | FED. AID PROJECT

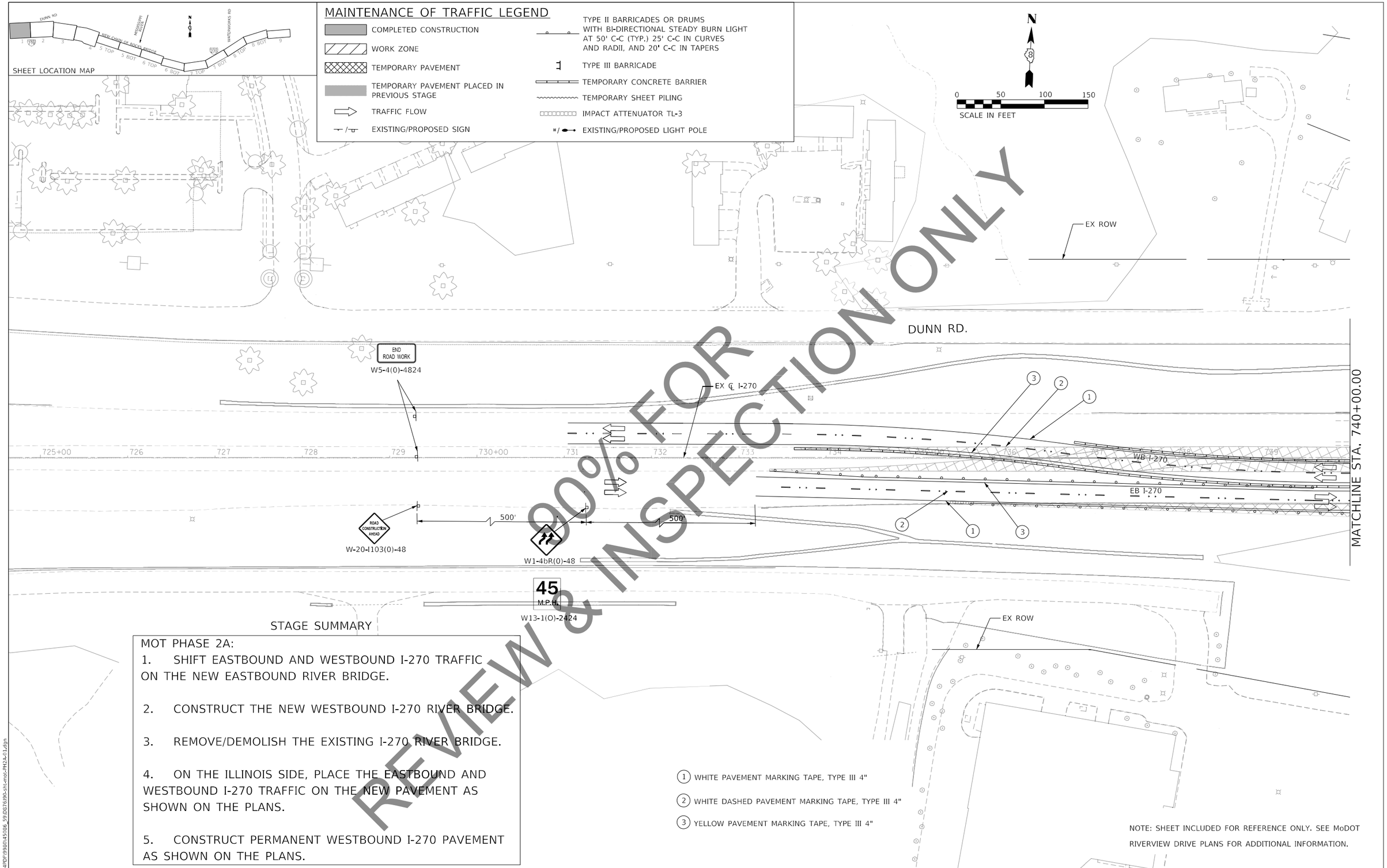

STAGE SUMMARY

MOT PHASE 2A:

1. SHIFT EASTBOUND AND WESTBOUND I-270 TRAFFIC ON THE NEW EASTBOUND RIVER BRIDGE.

2. CONSTRUCT THE NEW WESTBOUND I-270 RIVER BRIDGE.

3. REMOVE/DEMOLISH THE EXISTING I-270 RIVER BRIDGE.

4. ON THE ILLINOIS SIDE, PLACE THE EASTBOUND AND WESTBOUND I-270 TRAFFIC ON THE NEW PAVEMENT AS SHOWN ON THE PLANS.

5. CONSTRUCT PERMANENT WESTBOUND I-270 PAVEMENT AS SHOWN ON THE PLANS.

(1) WHITE PAVEMENT MARKING TAPE, TYPE III 4"

(2) WHITE DASHED PAVEMENT MARKING TAPE, TYPE III 4"

(3) YELLOW PAVEMENT MARKING TAPE, TYPE III 4"

NOTE: SHEET INCLUDED FOR REFERENCE ONLY. SEE MoDOT RIVERVIEW DRIVE PLANS FOR ADDITIONAL INFORMATION.

MODEL: Default
FILE NAME: C:\JCS4PDF\9960\45086_59D876\9B-sht-smpl-PH2A-01.dgn

HORNER & SHIFRIN / PARSONS (Teaming with:)	USER NAME = PWICS$	DESIGNED - RO	REVISED -
		DRAWN - SQ	REVISED -
	PLOT SCALE = 50.0000 ' / in.	CHECKED - JB	REVISED -
	PLOT DATE = 11/17/2021	DATE - 2021/07/27	REVISED -

STATE OF ILLINOIS
DEPARTMENT OF TRANSPORTATION

FAI 270 TRAFFIC CONTROL PLAN
PHASE 2A

SCALE: 1" = 50' | SHEET 1 OF 9 SHEETS | STA. TO STA. 740+00.00

F.A. RTE.	SECTION	COUNTY	TOTAL SHEETS	SHEET NO.
270	60B-1	MADISON	860	1006

CONTRACT NO. 76J90

ILLINOIS | FED. AID PROJECT

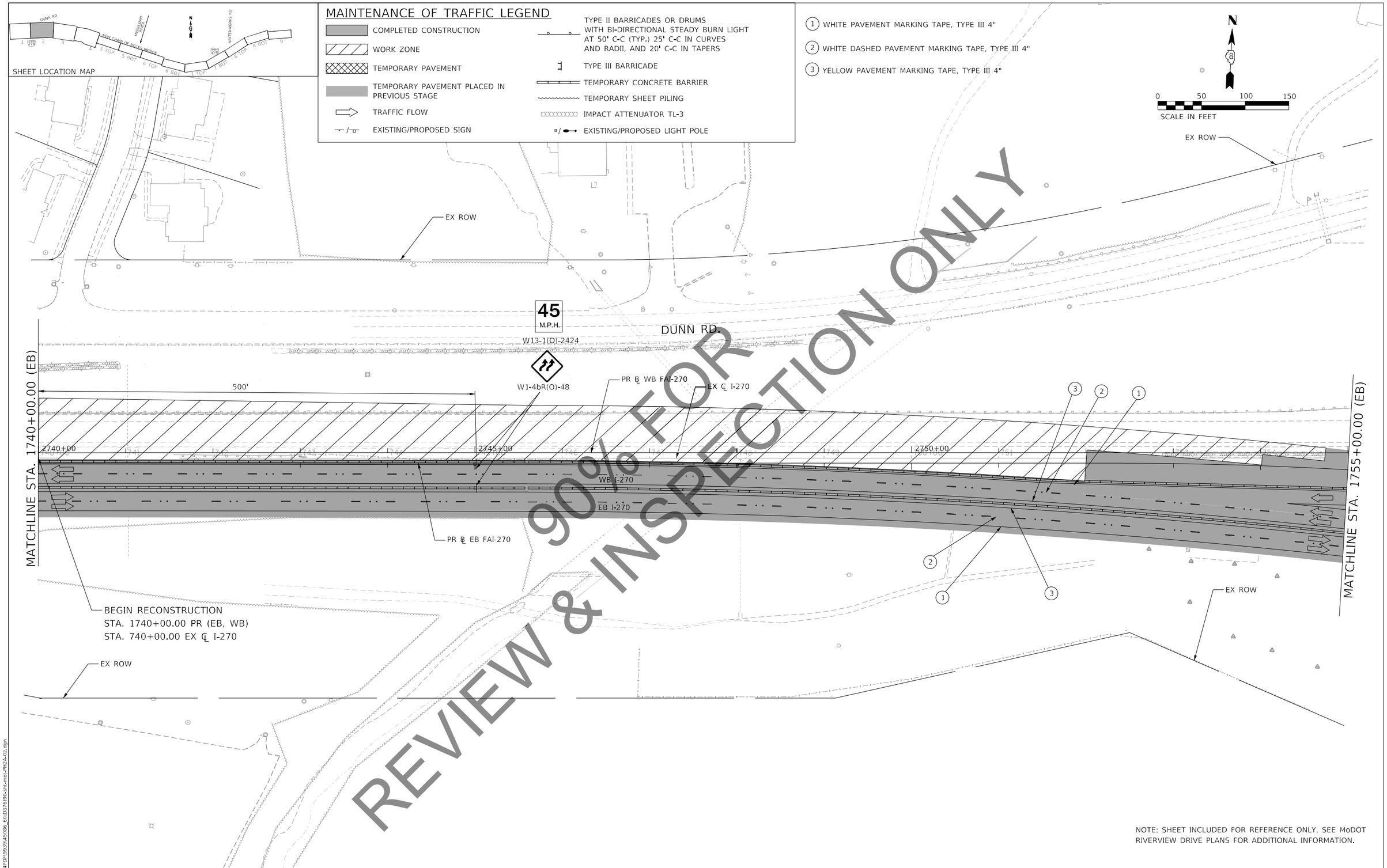

NOTE: SHEET INCLUDED FOR REFERENCE ONLY. SEE MoDOT RIVERVIEW DRIVE PLANS FOR ADDITIONAL INFORMATION.

MODEL: Default
FILE NAME: C:\CS4PDF\99391450B6_6\D3761\90-sht-mot-PH2A-02.dgn

HORNER & SHIFRIN Teaming with: PARSONS	USER NAME = PWICS$	DESIGNED - RO	REVISED -	STATE OF ILLINOIS DEPARTMENT OF TRANSPORTATION	FAI 270 TRAFFIC CONTROL PLAN PHASE 2A	F.A. RTE.	SECTION	COUNTY	TOTAL SHEETS	SHEET NO.
		DRAWN - SQ	REVISED -			270	60B-1	MADISON	860	104
	PLOT SCALE = 50.0000 ' / in.	CHECKED - JB	REVISED -					CONTRACT NO. 76J90		
	PLOT DATE = 11/12/2021	DATE - 2021/07/27	REVISED -		SCALE: 1" = 50' SHEET 2 OF 9 SHEETS STA. 1740+00.00 TO STA. 1755+00.00		ILLINOIS	FED. AID PROJECT		

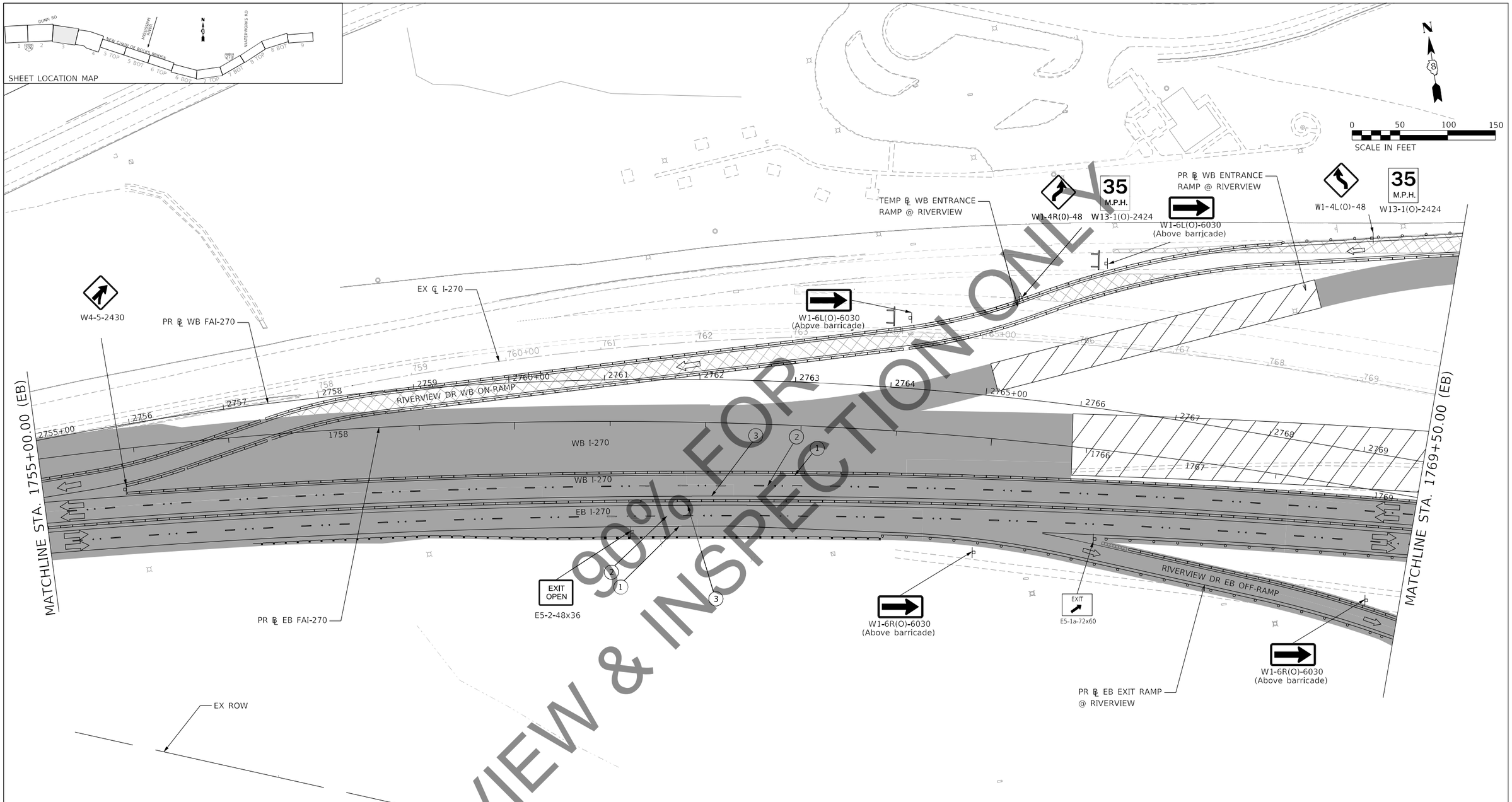

MAINTENANCE OF TRAFFIC LEGEND

- COMPLETED CONSTRUCTION
- WORK ZONE
- TEMPORARY PAVEMENT
- TEMPORARY PAVEMENT PLACED IN PREVIOUS STAGE
- TRAFFIC FLOW
- EXISTING/PROPOSED SIGN
- TYPE II BARRICADES OR DRUMS WITH BI-DIRECTIONAL STEADY BURN LIGHT AT 50' C-C (TYP.) 25' C-C IN CURVES AND RADII, AND 20' C-C IN TAPERS
- TYPE III BARRICADE
- TEMPORARY CONCRETE BARRIER
- TEMPORARY SHEET PILING
- IMPACT ATTENUATOR TL-3
- EXISTING/PROPOSED LIGHT POLE

1. WHITE PAVEMENT MARKING TAPE, TYPE III 4"
2. WHITE DASHED PAVEMENT MARKING TAPE, TYPE III 4"
3. YELLOW PAVEMENT MARKING TAPE, TYPE III 4"

NOTE: SHEET INCLUDED FOR REFERENCE ONLY. SEE MoDOT RIVERVIEW DRIVE PLANS FOR ADDITIONAL INFORMATION.

MODEL: Default
FILE NAME: C:\JCS4PDF\99394506_61D876\9h-sht-mot-PH2a-03.dgn

HORNER & SHIFRIN
Teaming with: PARSONS

USER NAME = PWICS$	DESIGNED - RO	REVISED -	
	DRAWN - SQ	REVISED -	
PLOT SCALE = 50.0000 ' / in.	CHECKED - JB	REVISED -	
PLOT DATE = 11/12/2021	DATE - 2021/07/27	REVISED -	

STATE OF ILLINOIS
DEPARTMENT OF TRANSPORTATION

FAI 270 TRAFFIC CONTROL PLAN
PHASE 2A

SCALE: 1" = 50' | SHEET 3 OF 9 SHEETS | STA. 1755+00.00 TO STA. 1769+50.00

F.A. RTE.	SECTION	COUNTY	TOTAL SHEETS	SHEET NO.
270	60B-1	MADISON	860	105

CONTRACT NO. 76J90

ILLINOIS | FED. AID PROJECT

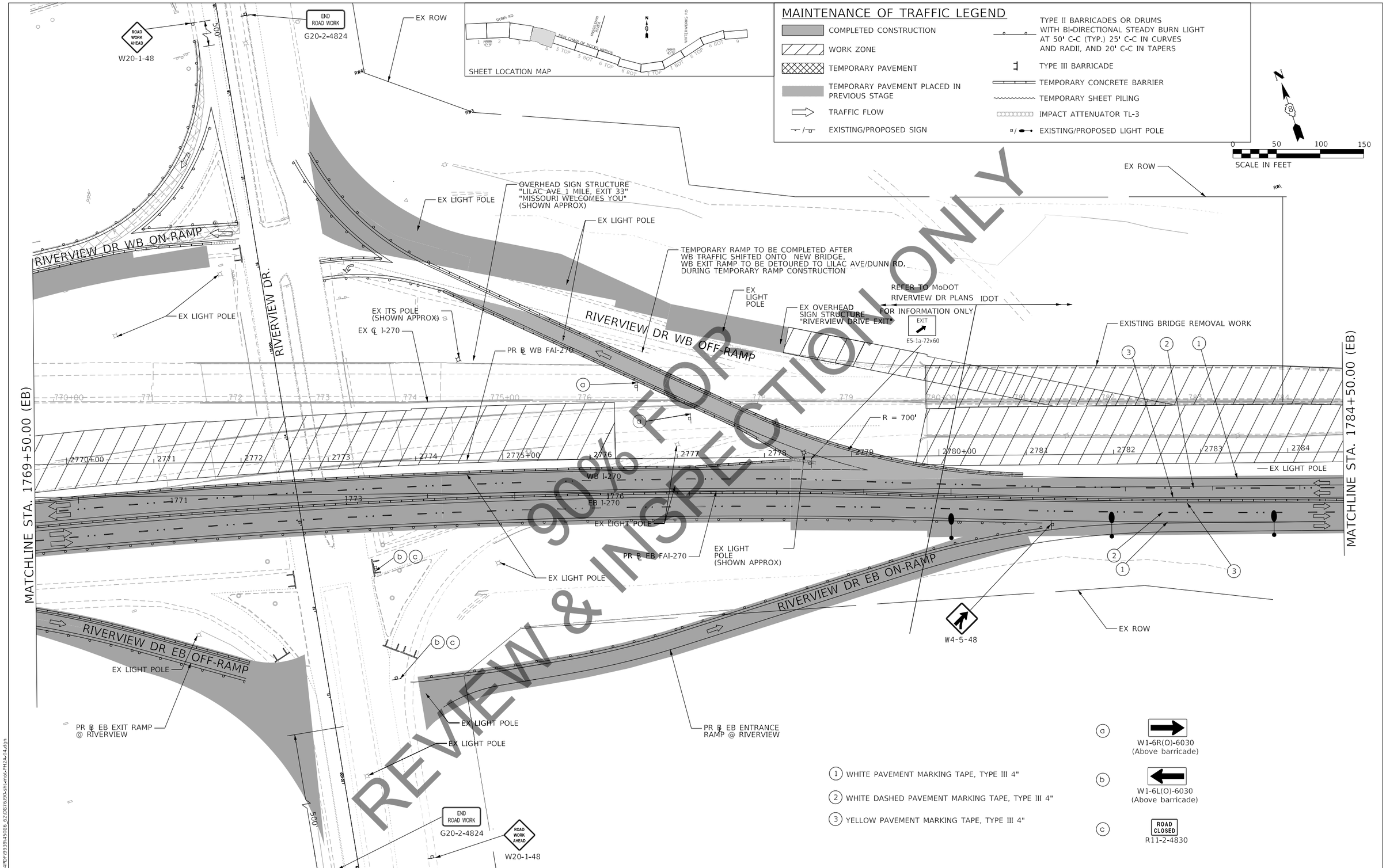

MODEL: Default
FILE NAME: C:\ICS4PDF\99394506\62D876\PH-sht-mot-PH2a-014.dgn

HORNER & SHIFRIN
Teaming with: PARSONS

USER NAME = PWICS$	DESIGNED - RO	REVISED -	
	DRAWN - SQ	REVISED -	
PLOT SCALE = 50.0000 ' / in.	CHECKED - JB	REVISED -	
PLOT DATE = 11/12/2021	DATE - 2021/07/27	REVISED -	

STATE OF ILLINOIS
DEPARTMENT OF TRANSPORTATION

FAI 270 TRAFFIC CONTROL PLAN
PHASE 2A

SCALE: 1" = 50' | SHEET 4 OF 9 SHEETS | STA. 1769+50.00 TO STA. 1784+50.00

F.A. RTE.	SECTION	COUNTY	TOTAL SHEETS	SHEET NO.
270	60B-1	MADISON	860	106
		CONTRACT NO. 76J90		
		ILLINOIS	FED. AID PROJECT	

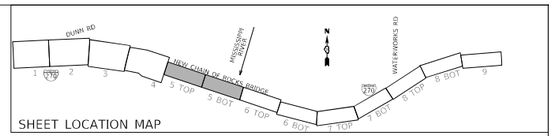

SHEET LOCATION MAP

MAINTENANCE OF TRAFFIC LEGEND

- COMPLETED CONSTRUCTION
- WORK ZONE
- TEMPORARY PAVEMENT
- TEMPORARY PAVEMENT PLACED IN PREVIOUS STAGE
- TRAFFIC FLOW
- EXISTING/PROPOSED SIGN
- TYPE II BARRICADES OR DRUMS WITH BI-DIRECTIONAL STEADY BURN LIGHT AT 50' C-C (TYP.) 25' C-C IN CURVES AND RADII, AND 20' C-C IN TAPERS
- TYPE III BARRICADE
- TEMPORARY CONCRETE BARRIER
- TEMPORARY SHEET PILING
- IMPACT ATTENUATOR TL-3
- EXISTING/PROPOSED LIGHT POLE

N

0 50 100 150
SCALE IN FEET

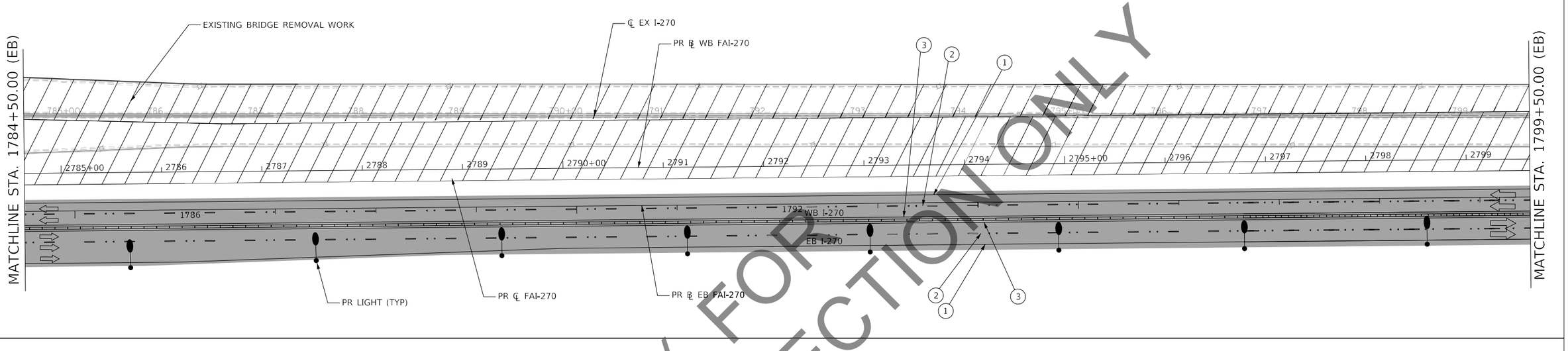

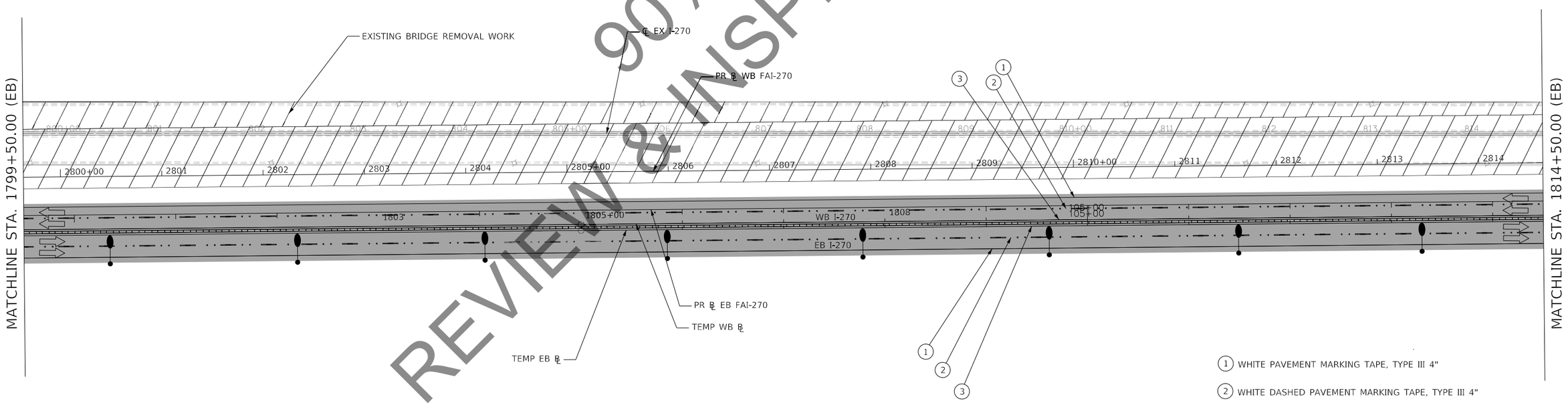

1. WHITE PAVEMENT MARKING TAPE, TYPE III 4"
2. WHITE DASHED PAVEMENT MARKING TAPE, TYPE III 4"
3. YELLOW PAVEMENT MARKING TAPE, TYPE III 4"

MODEL: Default
FILE NAME: C:\CS4PDF\9939\45086_63\D676J9h-sht-mot-PH2A-05.dgn

HORNER & SHIFRIN / Teaming with: PARSONS	USER NAME = PWICS$	DESIGNED - RO	REVISED -
		DRAWN - SQ	REVISED -
	PLOT SCALE = 50.0000 ' / in.	CHECKED - JB	REVISED -
	PLOT DATE = 11/12/2021	DATE - 2021/07/27	REVISED -

STATE OF ILLINOIS
DEPARTMENT OF TRANSPORTATION

FAI 270 TRAFFIC CONTROL PLAN
PHASE 2A

SCALE: 1" = 50' | SHEET 5 OF 9 SHEETS | STA. 1784+50.00 TO STA. 1814+50.00

F.A. RTE.	SECTION	COUNTY	TOTAL SHEETS	SHEET NO.
270	60B-1	MADISON	860	1070

CONTRACT NO. 76J90

ILLINOIS | FED. AID PROJECT

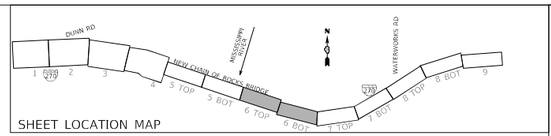

MAINTENANCE OF TRAFFIC LEGEND

- COMPLETED CONSTRUCTION
- WORK ZONE
- TEMPORARY PAVEMENT
- TEMPORARY PAVEMENT PLACED IN PREVIOUS STAGE
- TRAFFIC FLOW
- EXISTING/PROPOSED SIGN
- TYPE II BARRICADES OR DRUMS WITH BI-DIRECTIONAL STEADY BURN LIGHT AT 50' C-C (TYP.) 25' C-C IN CURVES AND RADII, AND 20' C-C IN TAPERS
- TYPE III BARRICADE
- TEMPORARY CONCRETE BARRIER
- TEMPORARY SHEET PILING
- IMPACT ATTENUATOR TL-3
- EXISTING/PROPOSED LIGHT POLE

1. WHITE PAVEMENT MARKING TAPE, TYPE III 4"
2. WHITE DASHED PAVEMENT MARKING TAPE, TYPE III 4"
3. YELLOW PAVEMENT MARKING TAPE, TYPE III 4"

0 50 100 150
SCALE IN FEET

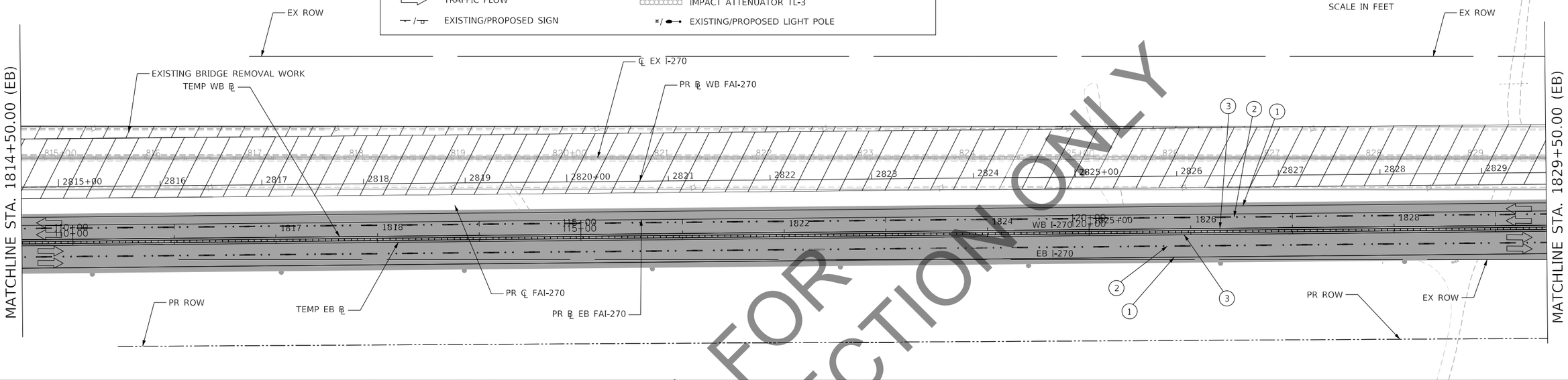

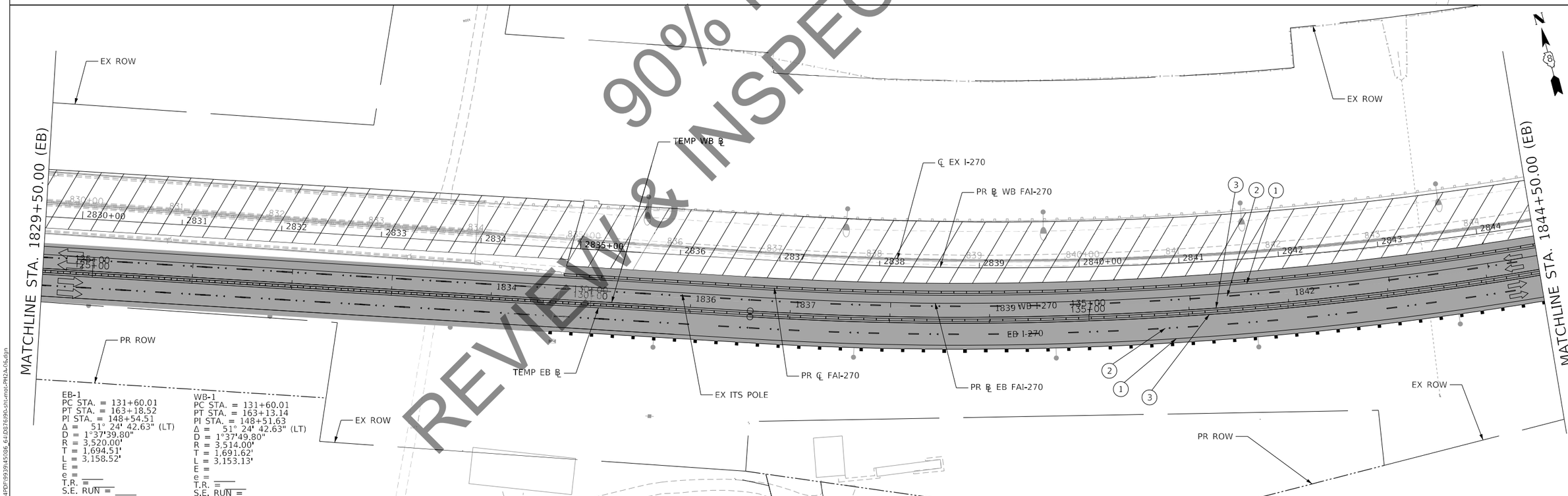

EB-1
PC STA. = 131+60.01
PT STA. = 163+18.52
PI STA. = 148+54.51
Δ = 51° 24' 42.63" (LT)
D = 1°37'39.80"
R = 3,520.00'
T = 1,694.51'
L = 3,158.52'
E = ____
e = ____
T.R. = ____
S.E. RUN = ____

WB-1
PC STA. = 131+60.01
PT STA. = 163+13.14
PI STA. = 148+51.63
Δ = 51° 24' 42.63" (LT)
D = 1°37'49.80"
R = 3,514.00'
T = 1,691.62'
L = 3,153.13'
E = ____
e = ____
T.R. = ____
S.E. RUN = ____

MODEL: Default
FILE NAME: C:\ICS4PDF\9939\45086_61\D676J90-sht-mot-PH2A-016.dgn

HORNER & SHIFRIN
Teaming with: PARSONS

USER NAME = PWICS$	DESIGNED - RO	REVISED -	
	DRAWN - SQ	REVISED -	
PLOT SCALE = 50.0000 ' / in.	CHECKED - JB	REVISED -	
PLOT DATE = 11/12/2021	DATE - 2021/07/27	REVISED -	

STATE OF ILLINOIS
DEPARTMENT OF TRANSPORTATION

FAI 270 TRAFFIC CONTROL PLAN
PHASE 2A

SCALE: 1" = 50' | SHEET 6 OF 9 SHEETS | STA. 1814+50.00 TO STA. 1844+50.00

F.A. RTE.	SECTION	COUNTY	TOTAL SHEETS	SHEET NO.
270	60B-1	MADISON	860	108
		CONTRACT NO. 76J90		
		ILLINOIS	FED. AID PROJECT	

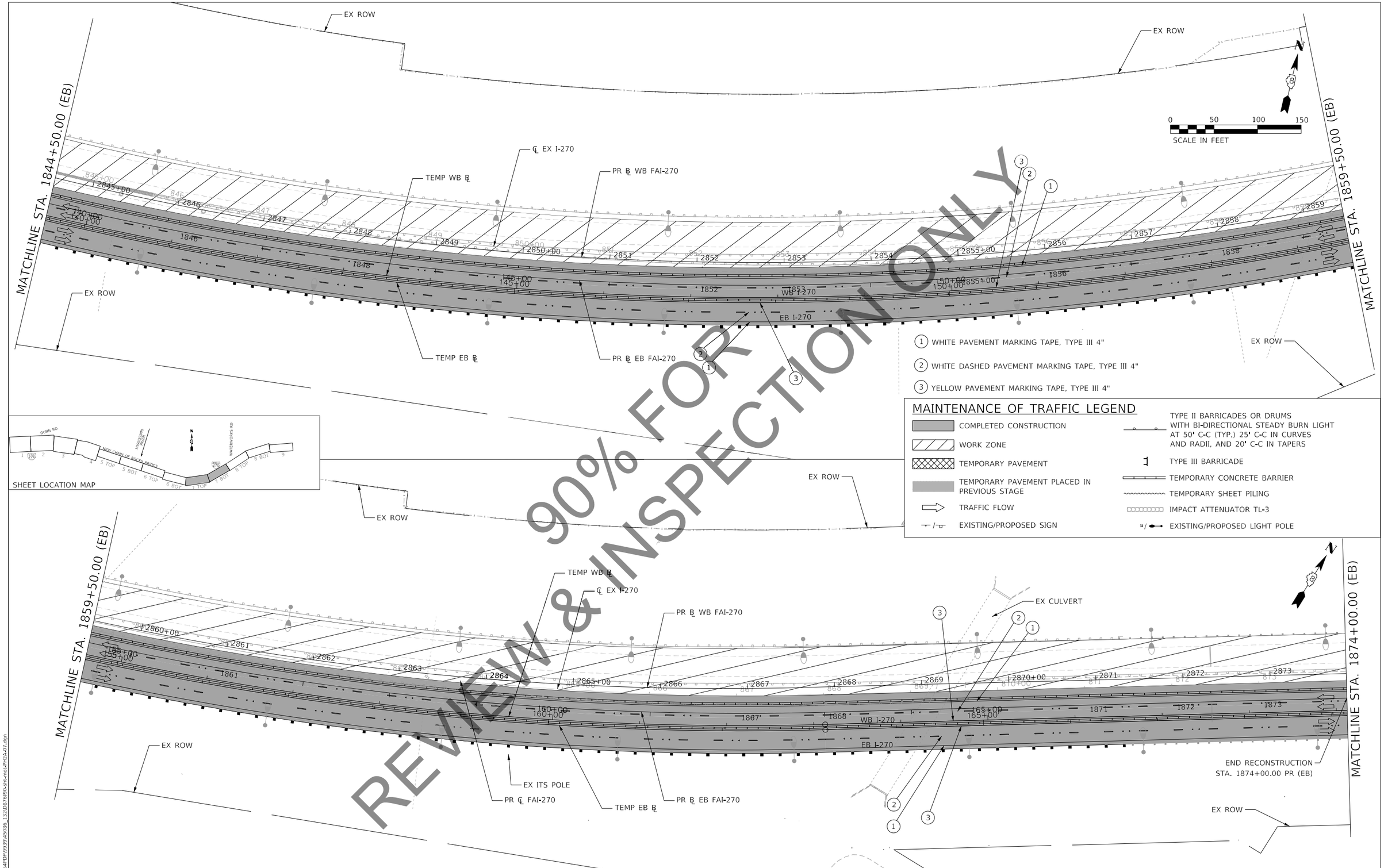

HORNER & SHIFRIN Teaming with: PARSONS	USER NAME = PWICS$	DESIGNED - RO	REVISED -	STATE OF ILLINOIS DEPARTMENT OF TRANSPORTATION	FAI 270 TRAFFIC CONTROL PLAN PHASE 2A
		DRAWN - SQ	REVISED -		
	PLOT SCALE = 50.0000 ' / in.	CHECKED - JB	REVISED -		
	PLOT DATE = 11/12/2021	DATE - 2021/07/27	REVISED -		SCALE: 1" = 50' SHEET 7 OF 9 SHEETS STA. 1844+50.00 TO STA. 1874+00.00

F.A. RTE.	SECTION	COUNTY	TOTAL SHEETS	SHEET NO.
270	60B-1	MADISON	860	102
		CONTRACT NO. 76J90		
		ILLINOIS	FED. AID PROJECT	

MODEL: Default
FILE NAME: C:\ICS4PDF\9939\45086_1320\D276J90-sht-mot-PH2A-07.dgn

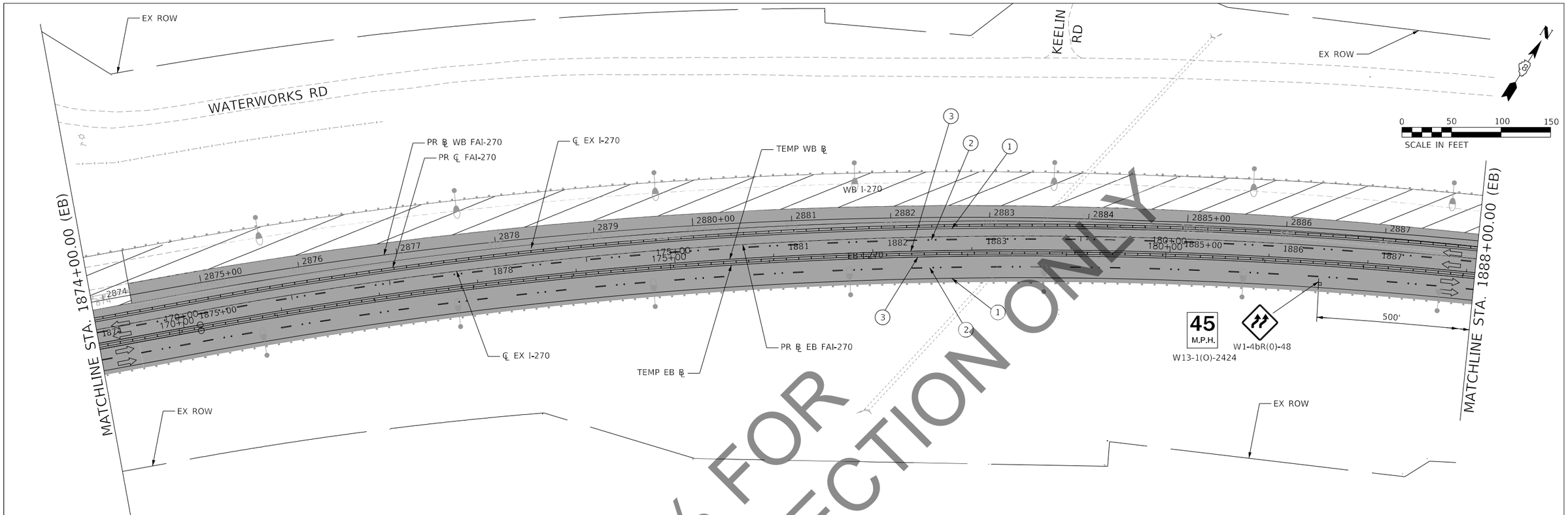

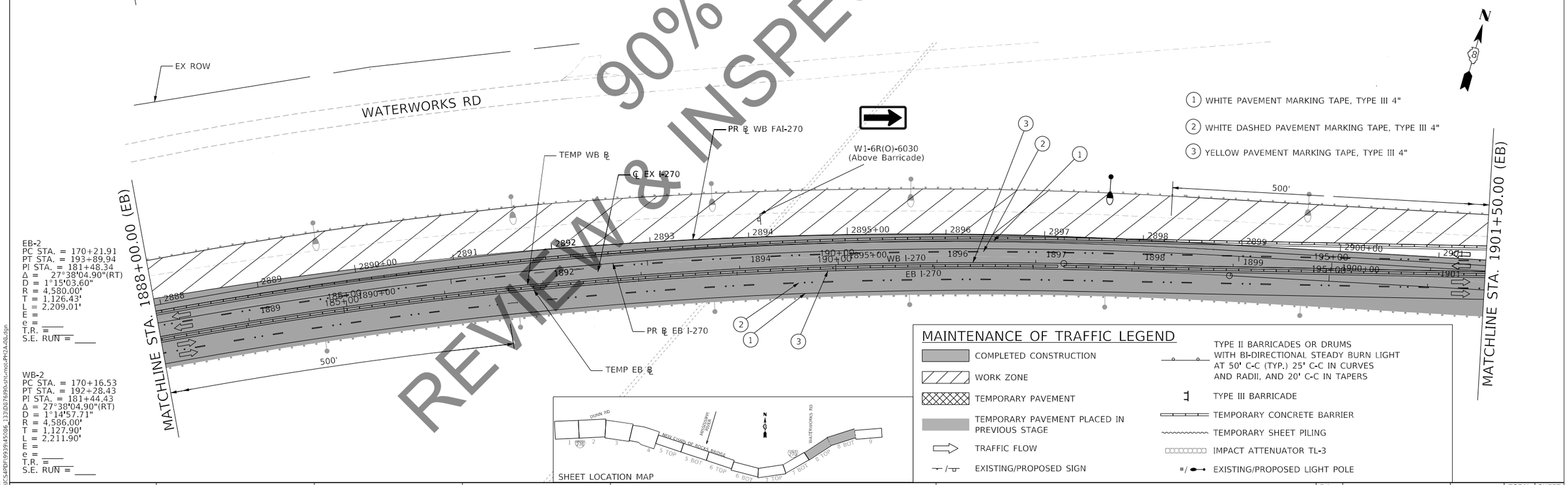

EB-2
PC STA. = 170+21.91
PT STA. = 193+89.94
PI STA. = 181+48.34
Δ = 27°38'04.90"(RT)
D = 1°15'03.60"
R = 4,580.00'
T = 1,126.43'
L = 2,209.01'
E =
e = ____
T.R. =
S.E. RUN = ____

WB-2
PC STA. = 170+16.53
PT STA. = 192+28.43
PI STA. = 181+44.43
Δ = 27°38'04.90"(RT)
D = 1°14'57.71"
R = 4,586.00'
T = 1,127.90'
L = 2,211.90'
E =
e = ____
T.R. =
S.E. RUN = ____

SHEET LOCATION MAP

MAINTENANCE OF TRAFFIC LEGEND

- COMPLETED CONSTRUCTION
- WORK ZONE
- TEMPORARY PAVEMENT
- TEMPORARY PAVEMENT PLACED IN PREVIOUS STAGE
- TRAFFIC FLOW
- EXISTING/PROPOSED SIGN
- TYPE II BARRICADES OR DRUMS WITH BI-DIRECTIONAL STEADY BURN LIGHT AT 50' C-C (TYP.) 25' C-C IN CURVES AND RADII, AND 20' C-C IN TAPERS
- TYPE III BARRICADE
- TEMPORARY CONCRETE BARRIER
- TEMPORARY SHEET PILING
- IMPACT ATTENUATOR TL-3
- EXISTING/PROPOSED LIGHT POLE

MODEL: Default
FILE NAME: C:\ICS4PDF\9939\45086_133\D076193-sht-mgt-PH2A-08.dgn

HORNER & SHIFRIN
Teaming with: PARSONS

USER NAME = PWICS$	DESIGNED - RO	REVISED -	
	DRAWN - SQ	REVISED -	
PLOT SCALE = 50.0000 ' / in.	CHECKED - JB	REVISED -	
PLOT DATE = 11/12/2021	DATE - 2021/07/27	REVISED -	

STATE OF ILLINOIS
DEPARTMENT OF TRANSPORTATION

FAI 270 TRAFFIC CONTROL PLAN
PHASE 2A

SCALE: 1" = 50' | SHEET 8 OF 9 SHEETS | STA. 1874+00.00 TO STA. 1901+50.00

F.A. RTE.	SECTION	COUNTY	TOTAL SHEETS	SHEET NO.
270	60B-1	MADISON	860	110
		CONTRACT NO. 76J90		
		ILLINOIS	FED. AID PROJECT	

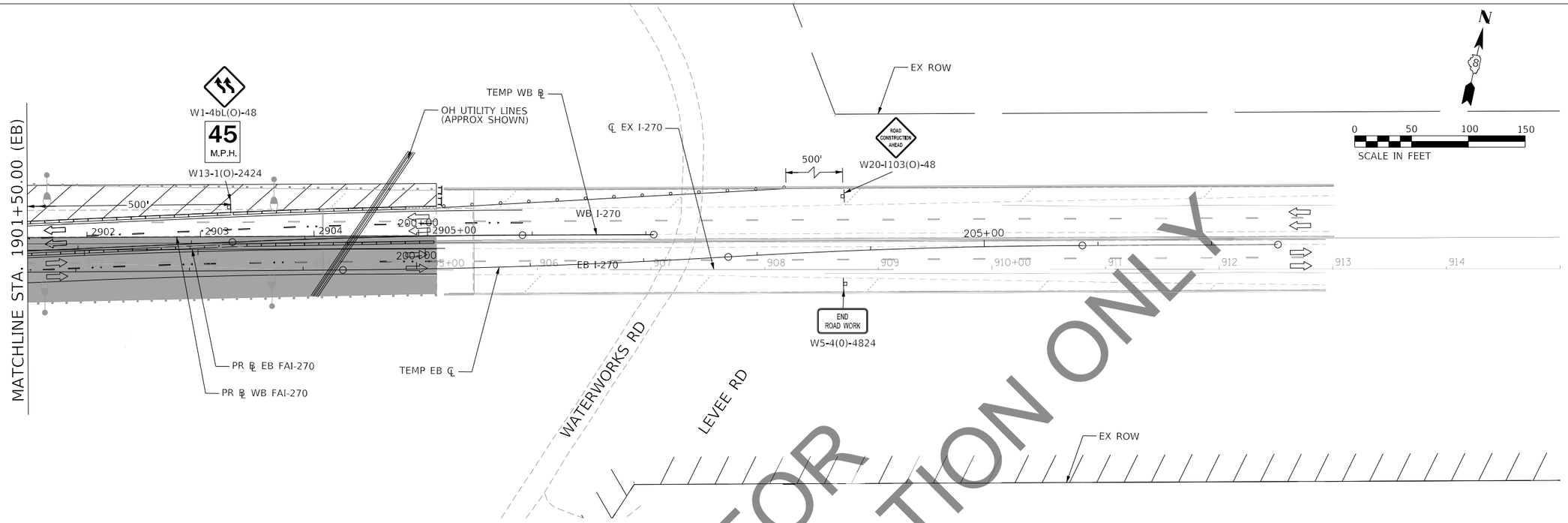

EB-3
PC STA. = 199+35.02
PRC STA. 202+74.44
PI STA. = 198+21.25
Δ = 2°17'10.18"(RT)
D = 0°53'31.85"
R = 6,422.00'
T = 128.14'
L = 256.24'
E =
e = ____
T.R. = ____
S.E. RUN = ____

WB-3
PC STA. = 198+36.10
PT STA. = 200+91.46
PI STA. = 199+63.80
Δ = 2°17'10.18"(RT)
D = 0°53'42.89"
R = 6,400.00'
T = 127.70'
L = 255.37'
E =
e = ____
T.R. = ____
S.E. RUN = ____

EB-4
PRC STA. = 202+74.44
PT STA. = 205+86.36
PI STA. =
Δ =
D =
R =
T =
L =
E =
e = ____
T.R. = ____
S.E. RUN = ____

MAINTENANCE OF TRAFFIC LEGEND

- COMPLETED CONSTRUCTION
- WORK ZONE
- TEMPORARY PAVEMENT
- TEMPORARY PAVEMENT PLACED IN PREVIOUS STAGE
- TRAFFIC FLOW
- EXISTING/PROPOSED SIGN
- TYPE II BARRICADES OR DRUMS WITH BI-DIRECTIONAL STEADY BURN LIGHT AT 50' C-C (TYP.) 25' C-C IN CURVES AND RADII, AND 20' C-C IN TAPERS
- TYPE III BARRICADE
- TEMPORARY CONCRETE BARRIER
- TEMPORARY SHEET PILING
- IMPACT ATTENUATOR TL-3
- EXISTING/PROPOSED LIGHT POLE

SHEET LOCATION MAP

MODEL: Default
FILE NAME: C:\CS4PDF\99394\5086_134D876\90-sht-mot-PH2A-09.dgn

HORNER & SHIFRIN
Teaming with: PARSONS

USER NAME = PWICS$	DESIGNED - RO	REVISED -	
	DRAWN - SQ	REVISED -	
PLOT SCALE = 50.0000 ' / in.	CHECKED - JB	REVISED -	
PLOT DATE = 11/12/2021	DATE - 2021/07/27	REVISED -	

STATE OF ILLINOIS
DEPARTMENT OF TRANSPORTATION

FAI 270 TRAFFIC CONTROL PLAN
PHASE 2A

SCALE: 1" = 50' | SHEET 9 OF 9 SHEETS | STA. 1901+50.00 TO STA.

F.A. RTE.	SECTION	COUNTY	TOTAL SHEETS	SHEET NO.
270	60B-1	MADISON	860	1134

CONTRACT NO. 76J90

ILLINOIS | FED. AID PROJECT

SHEET LOCATION MAP

MAINTENANCE OF TRAFFIC LEGEND

- COMPLETED CONSTRUCTION
- WORK ZONE
- TEMPORARY PAVEMENT
- TEMPORARY PAVEMENT PLACED IN PREVIOUS STAGE
- TRAFFIC FLOW
- EXISTING/PROPOSED SIGN
- TYPE II BARRICADES OR DRUMS WITH BI-DIRECTIONAL STEADY BURN LIGHT AT 50' C-C (TYP.) 25' C-C IN CURVES AND RADII, AND 20' C-C IN TAPERS
- TYPE III BARRICADE
- TEMPORARY CONCRETE BARRIER
- TEMPORARY SHEET PILING
- IMPACT ATTENUATOR TL-3
- EXISTING/PROPOSED LIGHT POLE

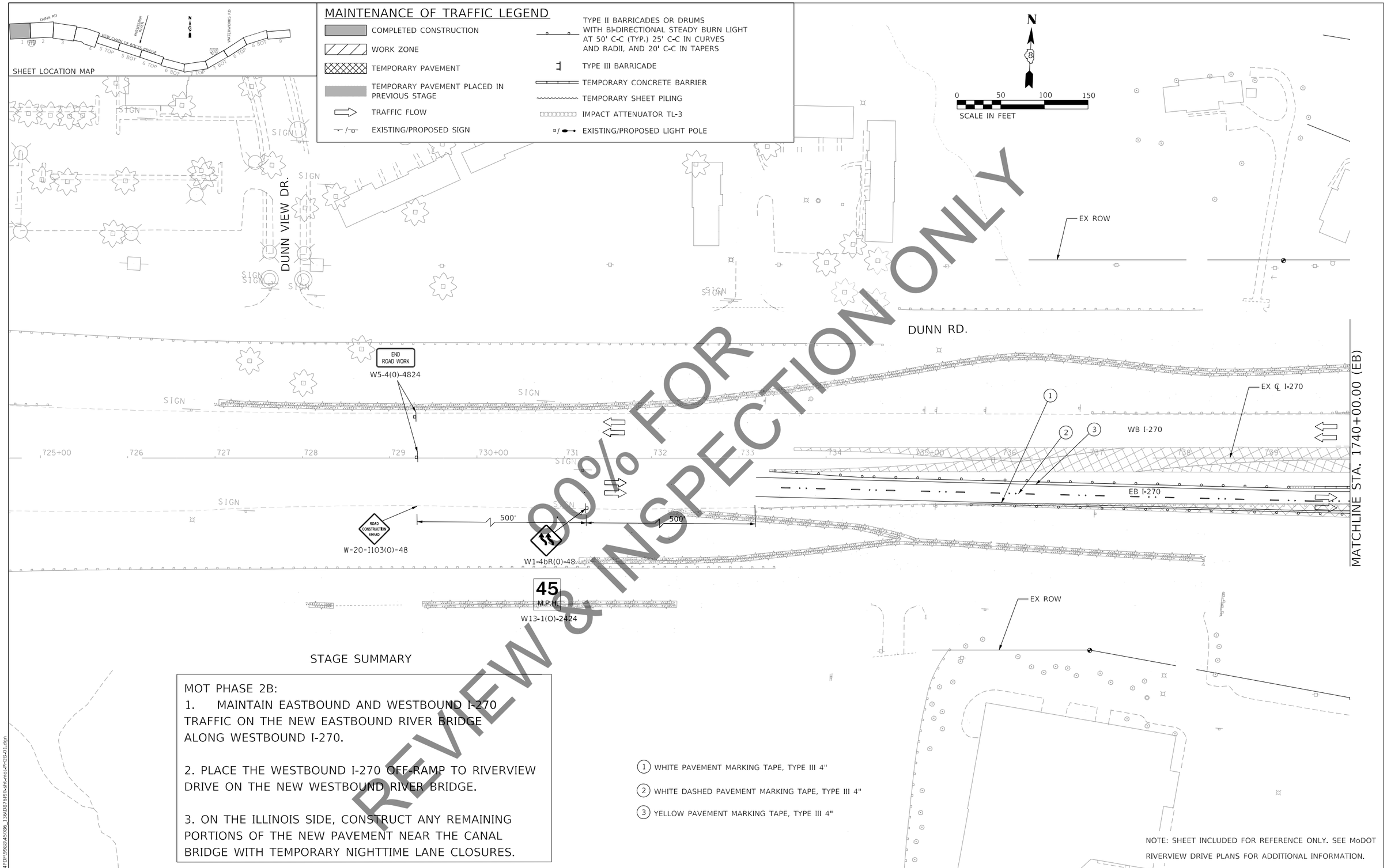

STAGE SUMMARY

MOT PHASE 2B:

1. MAINTAIN EASTBOUND AND WESTBOUND I-270 TRAFFIC ON THE NEW EASTBOUND RIVER BRIDGE ALONG WESTBOUND I-270.

2. PLACE THE WESTBOUND I-270 OFF-RAMP TO RIVERVIEW DRIVE ON THE NEW WESTBOUND RIVER BRIDGE.

3. ON THE ILLINOIS SIDE, CONSTRUCT ANY REMAINING PORTIONS OF THE NEW PAVEMENT NEAR THE CANAL BRIDGE WITH TEMPORARY NIGHTTIME LANE CLOSURES.

(1) WHITE PAVEMENT MARKING TAPE, TYPE III 4"

(2) WHITE DASHED PAVEMENT MARKING TAPE, TYPE III 4"

(3) YELLOW PAVEMENT MARKING TAPE, TYPE III 4"

NOTE: SHEET INCLUDED FOR REFERENCE ONLY. SEE MoDOT RIVERVIEW DRIVE PLANS FOR ADDITIONAL INFORMATION.

MODEL: Default
FILE NAME: C:\CS4PDF\99689145086_136\D76J90-sht-mot-PH2B-01.dgn

HORNER & SHIFRIN / PARSONS (Teaming with:)	USER NAME = PWICS$	DESIGNED - RO	REVISED -
		DRAWN - SQ	REVISED -
	PLOT SCALE = 50.0000 ' / in.	CHECKED - JB	REVISED -
	PLOT DATE = 11/17/2021	DATE - 2021/07/27	REVISED -

STATE OF ILLINOIS
DEPARTMENT OF TRANSPORTATION

FAI 270 TRAFFIC CONTROL PLAN
PHASE 2B

SCALE: 1" = 50' | SHEET 1 OF 9 SHEETS | STA. TO STA. 740+00.00

F.A. RTE.	SECTION	COUNTY	TOTAL SHEETS	SHEET NO.
270	60B-1	MADISON	860	112

CONTRACT NO. 76J90

ILLINOIS | FED. AID PROJECT

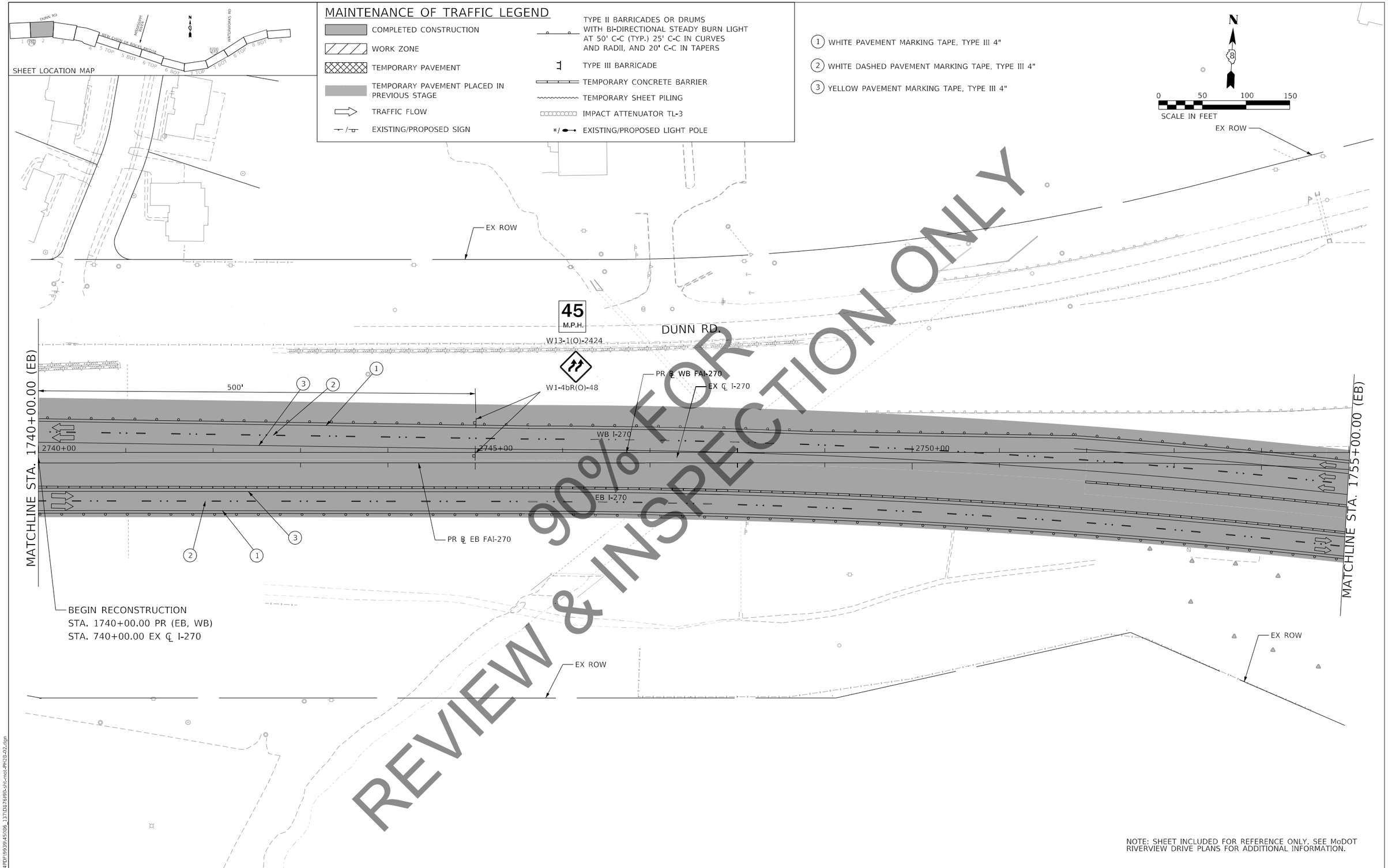

NOTE: SHEET INCLUDED FOR REFERENCE ONLY. SEE MoDOT RIVERVIEW DRIVE PLANS FOR ADDITIONAL INFORMATION.

MODEL: Default
FILE NAME: C:\ICS4PDF\9939\45986_1371D876\9-sht-mot-PH2B-02.dgn

HORNER & SHIFRIN
Teaming with: PARSONS

USER NAME = PWICS$	DESIGNED - RO	REVISED -	
	DRAWN - SQ	REVISED -	
PLOT SCALE = 50.0000 ' / in.	CHECKED - JB	REVISED -	
PLOT DATE = 11/12/2021	DATE - 2021/07/27	REVISED -	

STATE OF ILLINOIS
DEPARTMENT OF TRANSPORTATION

FAI 270 TRAFFIC CONTROL PLAN
PHASE 2B

SCALE: 1" = 50' | SHEET 2 OF 9 SHEETS | STA. 1740+00.00 TO STA. 1755+00.00

F.A. RTE.	SECTION	COUNTY	TOTAL SHEETS	SHEET NO.
270	60B-1	MADISON	860	113
		CONTRACT NO. 76J90		
	ILLINOIS	FED. AID PROJECT		

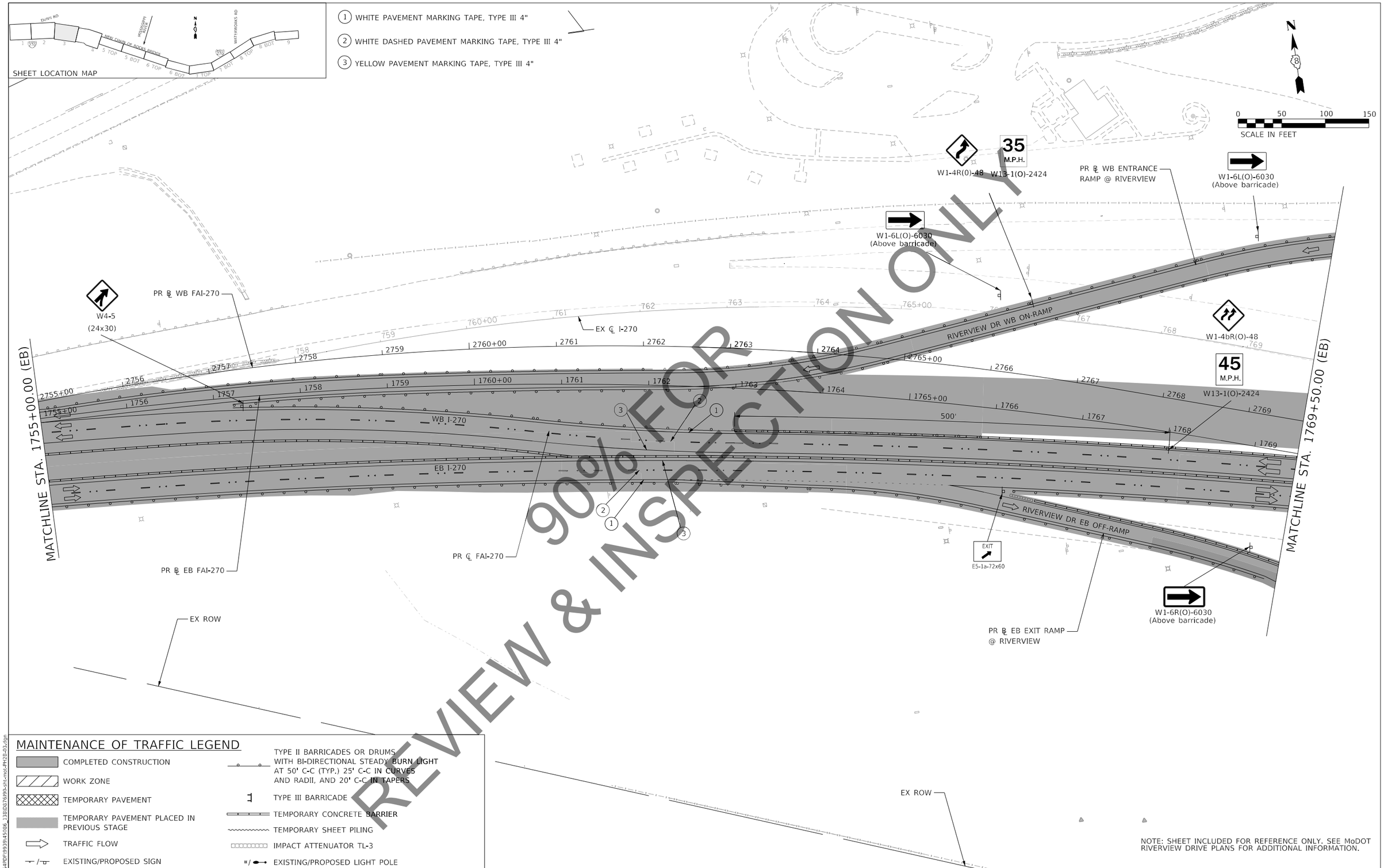

MAINTENANCE OF TRAFFIC LEGEND

- COMPLETED CONSTRUCTION
- WORK ZONE
- TEMPORARY PAVEMENT
- TEMPORARY PAVEMENT PLACED IN PREVIOUS STAGE
- TRAFFIC FLOW
- EXISTING/PROPOSED SIGN
- TYPE II BARRICADES OR DRUMS WITH BI-DIRECTIONAL STEADY BURN LIGHT AT 50' C-C (TYP.) 25' C-C IN CURVES AND RADII, AND 20' C-C IN TAPERS
- TYPE III BARRICADE
- TEMPORARY CONCRETE BARRIER
- TEMPORARY SHEET PILING
- IMPACT ATTENUATOR TL-3
- EXISTING/PROPOSED LIGHT POLE

NOTE: SHEET INCLUDED FOR REFERENCE ONLY. SEE MoDOT RIVERVIEW DRIVE PLANS FOR ADDITIONAL INFORMATION.

MODEL: Default
FILE NAME: C:\PCS4PDF\9939\45086_1380\D676\90-cnt-mod-PH2B-03.dgn

HORNER & SHIFRIN
Teaming with: PARSONS

USER NAME = PWICS$	DESIGNED - RO	REVISED -	
	DRAWN - SQ	REVISED -	
PLOT SCALE = 50.0000 ' / in.	CHECKED - JB	REVISED -	
PLOT DATE = 11/12/2021	DATE - 2021/07/27	REVISED -	

STATE OF ILLINOIS
DEPARTMENT OF TRANSPORTATION

FAI 270 TRAFFIC CONTROL PLAN
PHASE 2B

SCALE: 1" = 50' | SHEET 3 OF 9 SHEETS | STA. 1755+00.00 TO STA. 1769+50.00

F.A. RTE.	SECTION	COUNTY	TOTAL SHEETS	SHEET NO.
270	60B-1	MADISON	860	148

CONTRACT NO. 76J90

ILLINOIS | FED. AID PROJECT

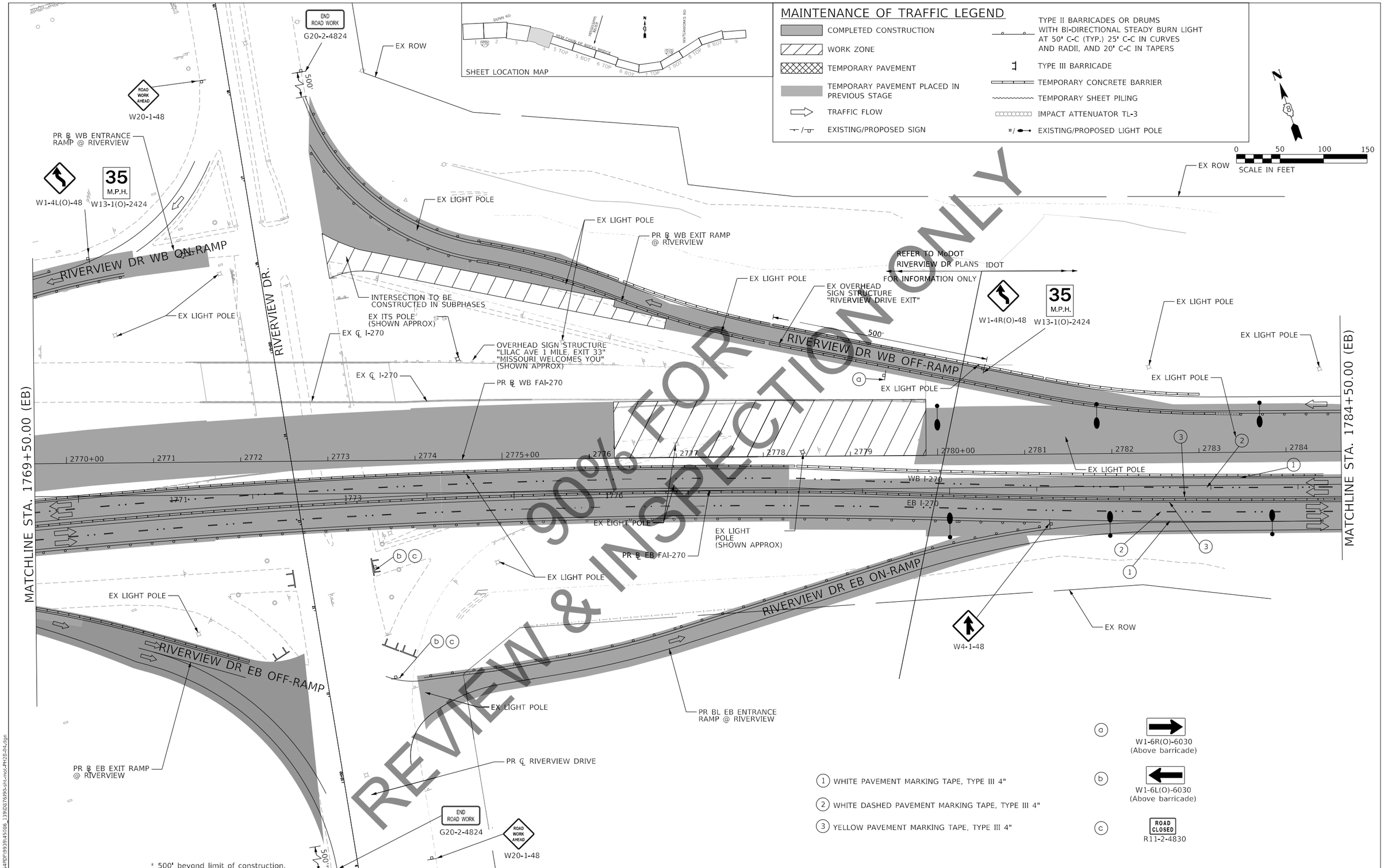

MODEL: Default
FILE NAME: C:\ICS4PDF\09394506_139\D6769\h-pn-not-PH2B-04.dgn

HORNER & SHIFRIN / Teaming with: PARSONS	USER NAME = PWICS$	DESIGNED - RO	REVISED -
		DRAWN - SQ	REVISED -
	PLOT SCALE = 50.0000 ' / in.	CHECKED - JB	REVISED -
	PLOT DATE = 11/12/2021	DATE - 2021/07/27	REVISED -

STATE OF ILLINOIS
DEPARTMENT OF TRANSPORTATION

FAI 270 TRAFFIC CONTROL PLAN
PHASE 2B

SCALE: 1" = 50' | SHEET 4 OF 9 SHEETS | STA. 1769+50.00 TO STA. 1784+50.00

F.A. RTE.	SECTION	COUNTY	TOTAL SHEETS	SHEET NO.
270	60B-1	MADISON	860	115
		CONTRACT NO. 76J90		
		ILLINOIS	FED. AID PROJECT	

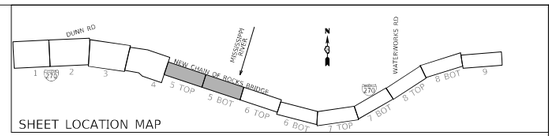

MAINTENANCE OF TRAFFIC LEGEND

- COMPLETED CONSTRUCTION
- WORK ZONE
- TEMPORARY PAVEMENT
- TEMPORARY PAVEMENT PLACED IN PREVIOUS STAGE
- TRAFFIC FLOW
- EXISTING/PROPOSED SIGN
- TYPE II BARRICADES OR DRUMS WITH BI-DIRECTIONAL STEADY BURN LIGHT AT 50' C-C (TYP.) 25' C-C IN CURVES AND RADII, AND 20' C-C IN TAPERS
- TYPE III BARRICADE
- TEMPORARY CONCRETE BARRIER
- TEMPORARY SHEET PILING
- IMPACT ATTENUATOR TL-3
- EXISTING/PROPOSED LIGHT POLE

(1) WHITE PAVEMENT MARKING TAPE, TYPE III 4"

(2) WHITE DASHED PAVEMENT MARKING TAPE, TYPE III 4"

(3) YELLOW PAVEMENT MARKING TAPE, TYPE III 4"

N

0 50 100 150

SCALE IN FEET

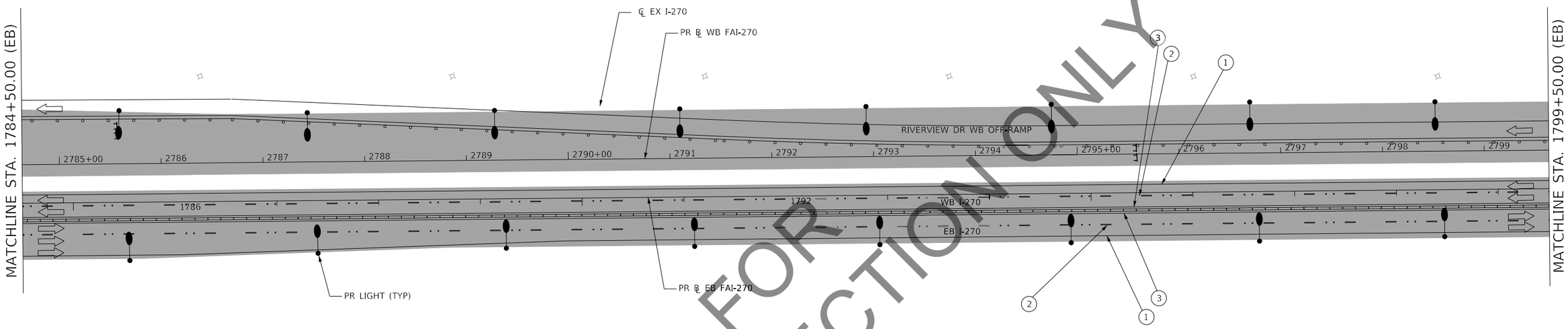

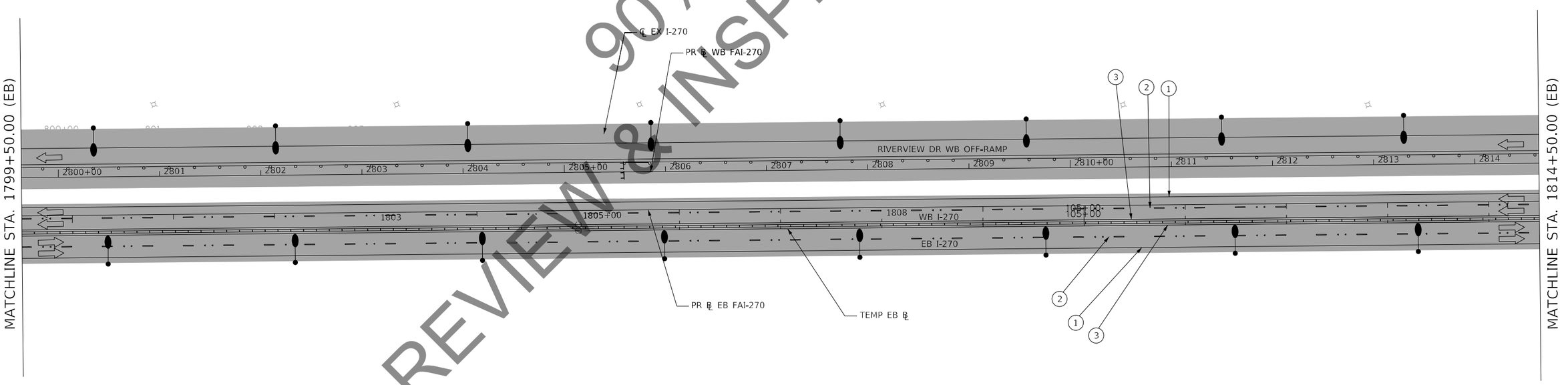

MODEL: Default
FILE NAME: C:\ICS4PDF\9939\45086_140\D76199-sht-cmgc-PH2B-05.dgn

HORNER & SHIFRIN Teaming with: PARSONS	USER NAME = PWICS$	DESIGNED - RO	REVISED -	STATE OF ILLINOIS DEPARTMENT OF TRANSPORTATION	FAI 270 TRAFFIC CONTROL PLAN PHASE 2B
		DRAWN - SQ	REVISED -		
	PLOT SCALE = 50.0000 ' / in.	CHECKED - JB	REVISED -		
	PLOT DATE = 11/12/2021	DATE - 2021/07/27	REVISED -		SCALE: 1" = 50' SHEET 5 OF 9 SHEETS STA. 1784+50.00 TO STA. 1814+50.00

F.A. RTE.	SECTION	COUNTY	TOTAL SHEETS	SHEET NO.
270	60B-1	MADISON	860	116
		CONTRACT NO. 76J90		
		ILLINOIS	FED. AID PROJECT	

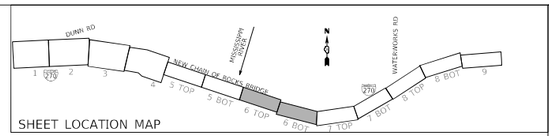

SHEET LOCATION MAP

MAINTENANCE OF TRAFFIC LEGEND

- COMPLETED CONSTRUCTION
- WORK ZONE
- TEMPORARY PAVEMENT
- TEMPORARY PAVEMENT PLACED IN PREVIOUS STAGE
- TRAFFIC FLOW
- EXISTING/PROPOSED SIGN
- TYPE II BARRICADES OR DRUMS WITH BI-DIRECTIONAL STEADY BURN LIGHT AT 50' C-C (TYP.) 25' C-C IN CURVES AND RADII, AND 20' C-C IN TAPERS
- TYPE III BARRICADE
- TEMPORARY CONCRETE BARRIER
- TEMPORARY SHEET PILING
- IMPACT ATTENUATOR TL-3
- EXISTING/PROPOSED LIGHT POLE

1. WHITE PAVEMENT MARKING TAPE, TYPE III 4"
2. WHITE DASHED PAVEMENT MARKING TAPE, TYPE III 4"
3. YELLOW PAVEMENT MARKING TAPE, TYPE III 4"

N

0 50 100 150
SCALE IN FEET

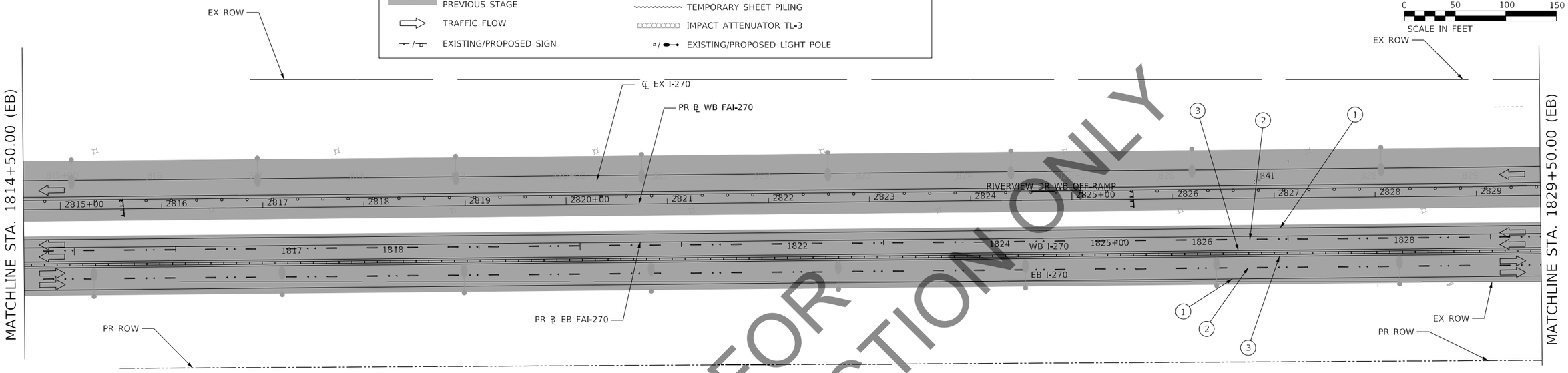

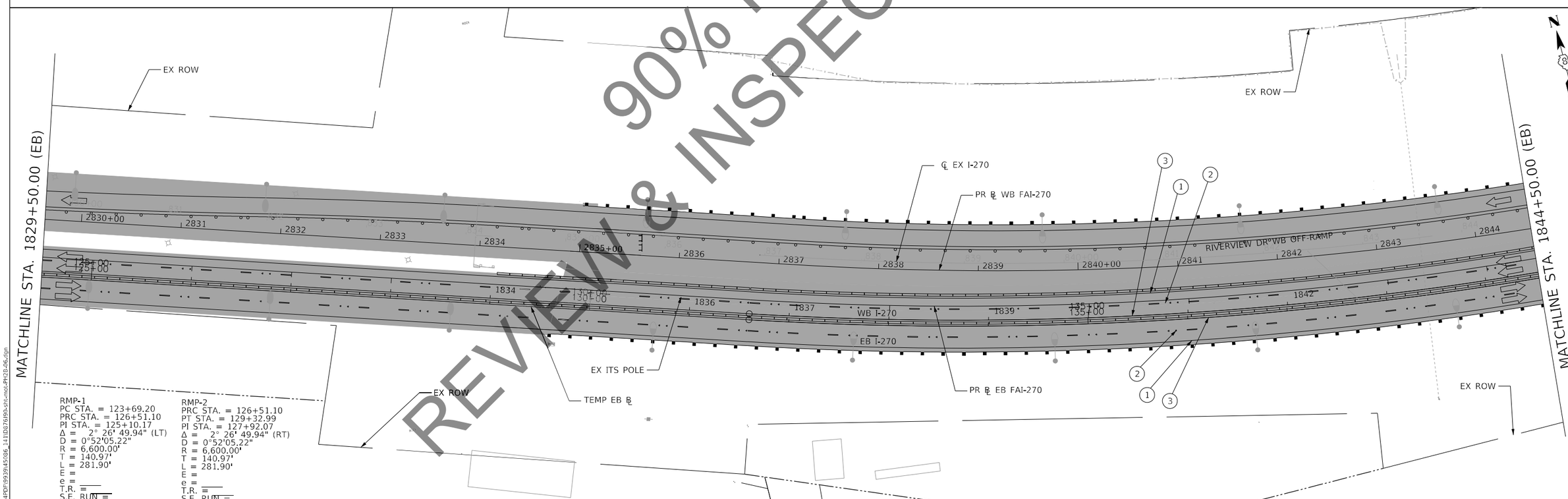

RMP-1
PC STA. = 123+69.20
PRC STA. = 126+51.10
PI STA. = 125+10.17
Δ = 2° 26' 49.94" (LT)
D = 0°52'05.22"
R = 6,600.00'
T = 140.97'
L = 281.90'
E =
e = ____
T.R. = ____
S.E. RUN = ____

RMP-2
PRC STA. = 126+51.10
PT STA. = 129+32.99
PI STA. = 127+92.07
Δ = 2° 26' 49.94" (RT)
D = 0°52'05.22"
R = 6,600.00'
T = 140.97'
L = 281.90'
E =
e = ____
T.R. = ____
S.E. RUN = ____

MODEL: Default
FILE NAME: C:\CS4PDF\9939\45086_141D876\01-ctrl-mod-PH2B-06.dgn

HORNER & SHIFRIN
Teaming with: PARSONS

USER NAME = PWICS$	DESIGNED - RO	REVISED -	
	DRAWN - SQ	REVISED -	
PLOT SCALE = 50.0000 ' / in.	CHECKED - JB	REVISED -	
PLOT DATE = 11/12/2021	DATE - 2021/07/27	REVISED -	

STATE OF ILLINOIS
DEPARTMENT OF TRANSPORTATION

FAI 270 TRAFFIC CONTROL PLAN
PHASE 2B

SCALE: 1" = 50' | SHEET 6 OF 9 SHEETS | STA. 1814+50.00 TO STA. 1844+50.00

F.A. RTE.	SECTION	COUNTY	TOTAL SHEETS	SHEET NO.
270	60B-1	MADISON	860	117
		CONTRACT NO. 76J90		
		ILLINOIS	FED. AID PROJECT	

EB-1
PC STA. = 131+60.01
PT STA. = 163+18.52

PI STA. = 148+54.51
Δ = 51° 24' 42.63" (LT)
D = 1°37'39.80"
R = 3,520.00'
T = 1,694.51'
L = 3,158.52'
E =
e = ____
T.R. = ____
S.E. RUN = ____

WB-1
PC STA. =
PT STA. =
PI STA. = 148+51.63
Δ = 51° 24' 42" (LT)
D = 1°37'49.80"(LT)
R = 3,514.00'
T = 1,691.62'
L = 3,153.13'
E =
e = ____
T.R. = ____
S.E. RUN = ____

RMP-3
PC STA. = 132+00.65
PT STA. = 162+25.46
PI STA. = 148+23.07
Δ = 51° 20' 08.08" (LT)
D = 1°41'49.74"
R = 3,376.00'
T = 1,622.42'
L = 3,024.81'
E =
e = ____
T.R. = ____
S.E. RUN = ____

1. WHITE PAVEMENT MARKING TAPE, TYPE III 4"
2. WHITE DASHED PAVEMENT MARKING TAPE, TYPE III 4"
3. YELLOW PAVEMENT MARKING TAPE, TYPE III 4"

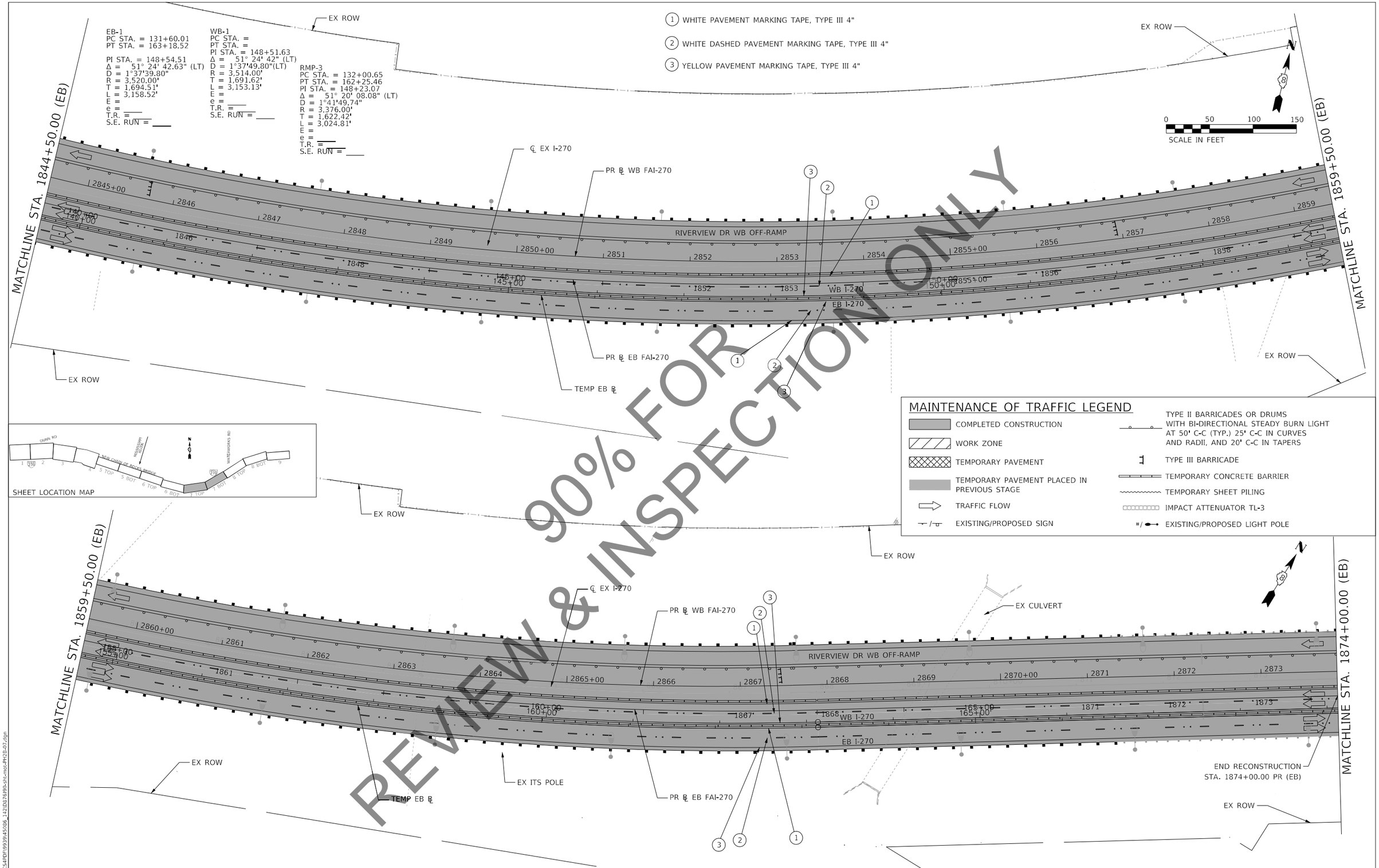

MAINTENANCE OF TRAFFIC LEGEND

- COMPLETED CONSTRUCTION
- WORK ZONE
- TEMPORARY PAVEMENT
- TEMPORARY PAVEMENT PLACED IN PREVIOUS STAGE
- TRAFFIC FLOW
- EXISTING/PROPOSED SIGN
- TYPE II BARRICADES OR DRUMS WITH BI-DIRECTIONAL STEADY BURN LIGHT AT 50' C-C (TYP.) 25' C-C IN CURVES AND RADII, AND 20' C-C IN TAPERS
- TYPE III BARRICADE
- TEMPORARY CONCRETE BARRIER
- TEMPORARY SHEET PILING
- IMPACT ATTENUATOR TL-3
- EXISTING/PROPOSED LIGHT POLE

MODEL: Default
FILE NAME: C:\ICS4PDF\9939\45086_1420\D76J90-sht-mot-PH2B-07.dgn

HORNER & SHIFRIN
Teaming with: PARSONS

USER NAME = PWICS$	DESIGNED - RO	REVISED -	
	DRAWN - SQ	REVISED -	
PLOT SCALE = 50.0000 ' / in.	CHECKED - JB	REVISED -	
PLOT DATE = 11/12/2021	DATE - 2021/07/27	REVISED -	

STATE OF ILLINOIS
DEPARTMENT OF TRANSPORTATION

FAI 270 TRAFFIC CONTROL PLAN
PHASE 2B

SCALE: 1" = 50' | SHEET 7 OF 9 SHEETS | STA. 1844+50.00 TO STA. 1874+00.00

F.A. RTE.	SECTION	COUNTY	TOTAL SHEETS	SHEET NO.
270	60B-1	MADISON	860	112

CONTRACT NO. 76J90
ILLINOIS | FED. AID PROJECT

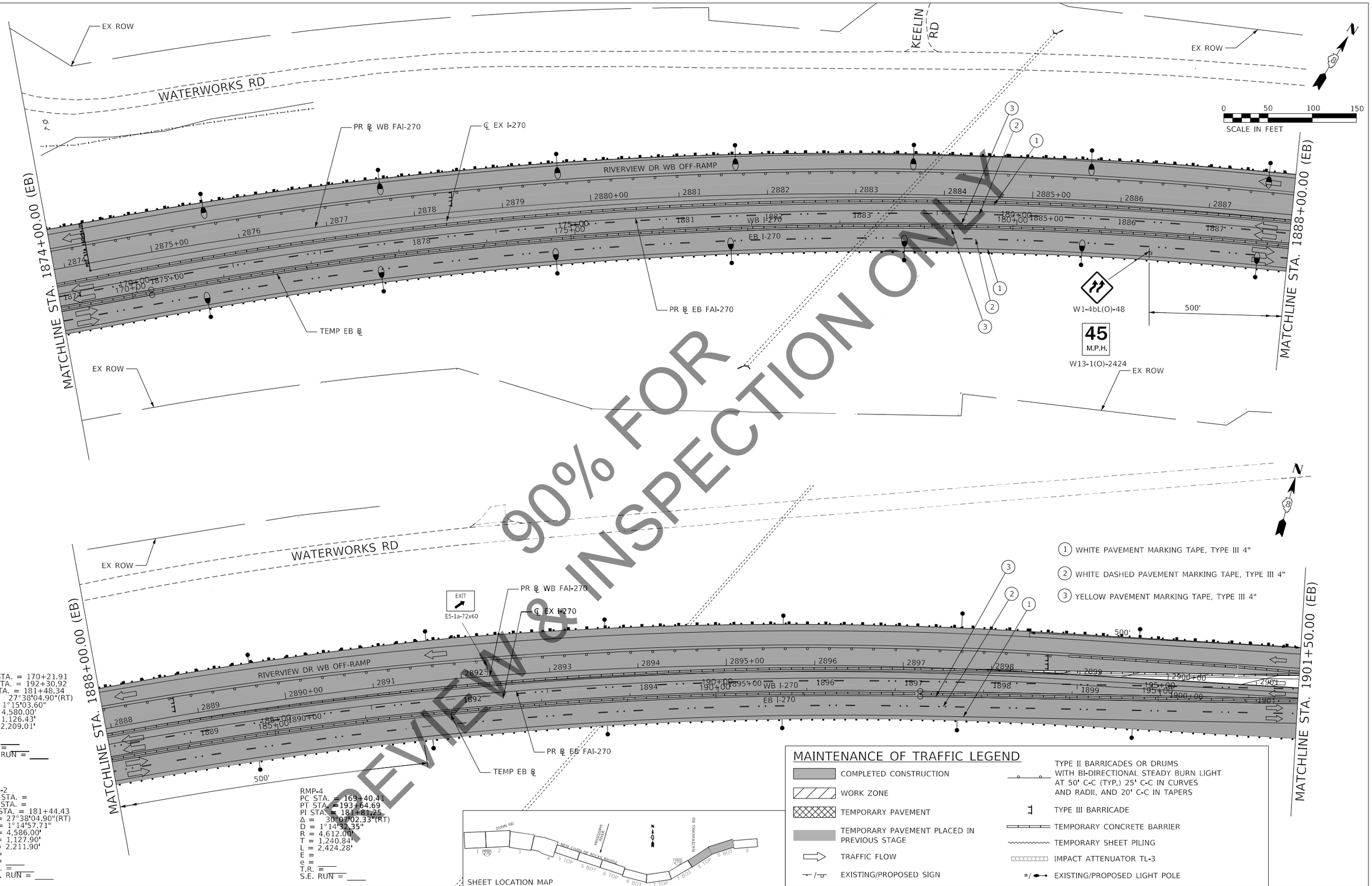

MODEL: Default
FILE NAME: C:\PCS4PDF\9939\45086_1430\D6726\90-sht-mot-PH2B-08.dgn

HORNER & SHIFRIN
Teaming with: PARSONS

USER NAME = PWICS$	DESIGNED - RO	REVISED -	
	DRAWN - SQ	REVISED -	
PLOT SCALE = 50.0000 ' / in.	CHECKED - JB	REVISED -	
PLOT DATE = 11/12/2021	DATE - 2021/07/27	REVISED -	

STATE OF ILLINOIS
DEPARTMENT OF TRANSPORTATION

FAI 270 TRAFFIC CONTROL PLAN
PHASE 2B

SCALE: 1" = 50' | SHEET 8 OF 9 SHEETS | STA. 1874+00.00 TO STA. 1901+50.00

F.A. RTE.	SECTION	COUNTY	TOTAL SHEETS	SHEET NO.
270	60B-1	MADISON	860	113

CONTRACT NO. 76J90
ILLINOIS | FED. AID PROJECT

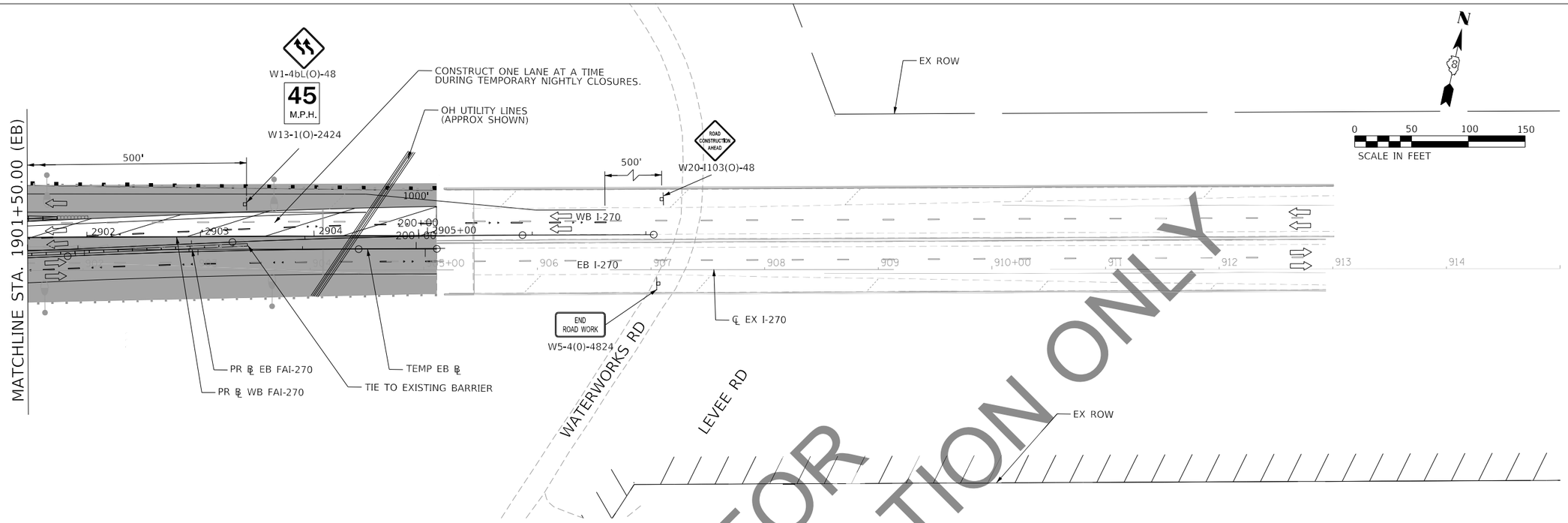

EB-3
PC STA. = 196+93.11
PT STA. = 199+49.36
PI STA. = 198+21.25
Δ = 2°17'10.18"(RT)
D = 0°53'31.85"
R = 6,422.00'
T = 128.14'
L = 256.24'
E =
e = ____
T.R. = ____
S.E. RUN = ____

WB-3
PC STA. =
PT STA. =
PI STA. = 199+63.80
Δ = 2°17'10.18"(RT)
D = 0°53'42.89"
R = 6,400.00'
T = 127.70'
L = 255.37'
E =
e = ____
T.R. = ____
S.E. RUN = ____

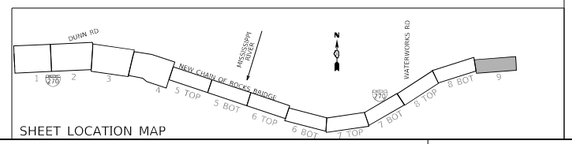

SHEET LOCATION MAP

MAINTENANCE OF TRAFFIC LEGEND

- COMPLETED CONSTRUCTION
- WORK ZONE
- TEMPORARY PAVEMENT
- TEMPORARY PAVEMENT PLACED IN PREVIOUS STAGE
- TRAFFIC FLOW
- EXISTING/PROPOSED SIGN
- TYPE II BARRICADES OR DRUMS WITH BI-DIRECTIONAL STEADY BURN LIGHT AT 50' C-C (TYP.) 25' C-C IN CURVES AND RADII, AND 20' C-C IN TAPERS
- TYPE III BARRICADE
- TEMPORARY CONCRETE BARRIER
- TEMPORARY SHEET PILING
- IMPACT ATTENUATOR TL-3
- EXISTING/PROPOSED LIGHT POLE

MODEL: Default
FILE NAME: C:\CS4PDF\99394\5086_1441D676\90-sht-mot-PH2B-09.dgn

HORNER & SHIFRIN
Teaming with: PARSONS

USER NAME = PWICS$	DESIGNED - RO	REVISED -	
	DRAWN - SQ	REVISED -	
PLOT SCALE = 50.0000 ' / in.	CHECKED - JB	REVISED -	
PLOT DATE = 11/12/2021	DATE - 2021/07/27	REVISED -	

STATE OF ILLINOIS
DEPARTMENT OF TRANSPORTATION

FAI 270 TRAFFIC CONTROL PLAN
PHASE 2B

SCALE: 1" = 50' | SHEET 9 OF 9 SHEETS | STA. 1901+50.00 TO STA.

F.A. RTE.	SECTION	COUNTY	TOTAL SHEETS	SHEET NO.
270	60B-1	MADISON	860	120

CONTRACT NO. 76J90

ILLINOIS | FED. AID PROJECT

SHEET LOCATION MAP

MAINTENANCE OF TRAFFIC LEGEND

- COMPLETED CONSTRUCTION
- WORK ZONE
- TEMPORARY PAVEMENT
- TEMPORARY PAVEMENT PLACED IN PREVIOUS STAGE
- TRAFFIC FLOW
- EXISTING/PROPOSED SIGN
- TYPE II BARRICADES OR DRUMS WITH BI-DIRECTIONAL STEADY BURN LIGHT AT 50' C-C (TYP.) 25' C-C IN CURVES AND RADII, AND 20' C-C IN TAPERS
- TYPE III BARRICADE
- TEMPORARY CONCRETE BARRIER
- TEMPORARY SHEET PILING
- IMPACT ATTENUATOR TL-3
- EXISTING/PROPOSED LIGHT POLE

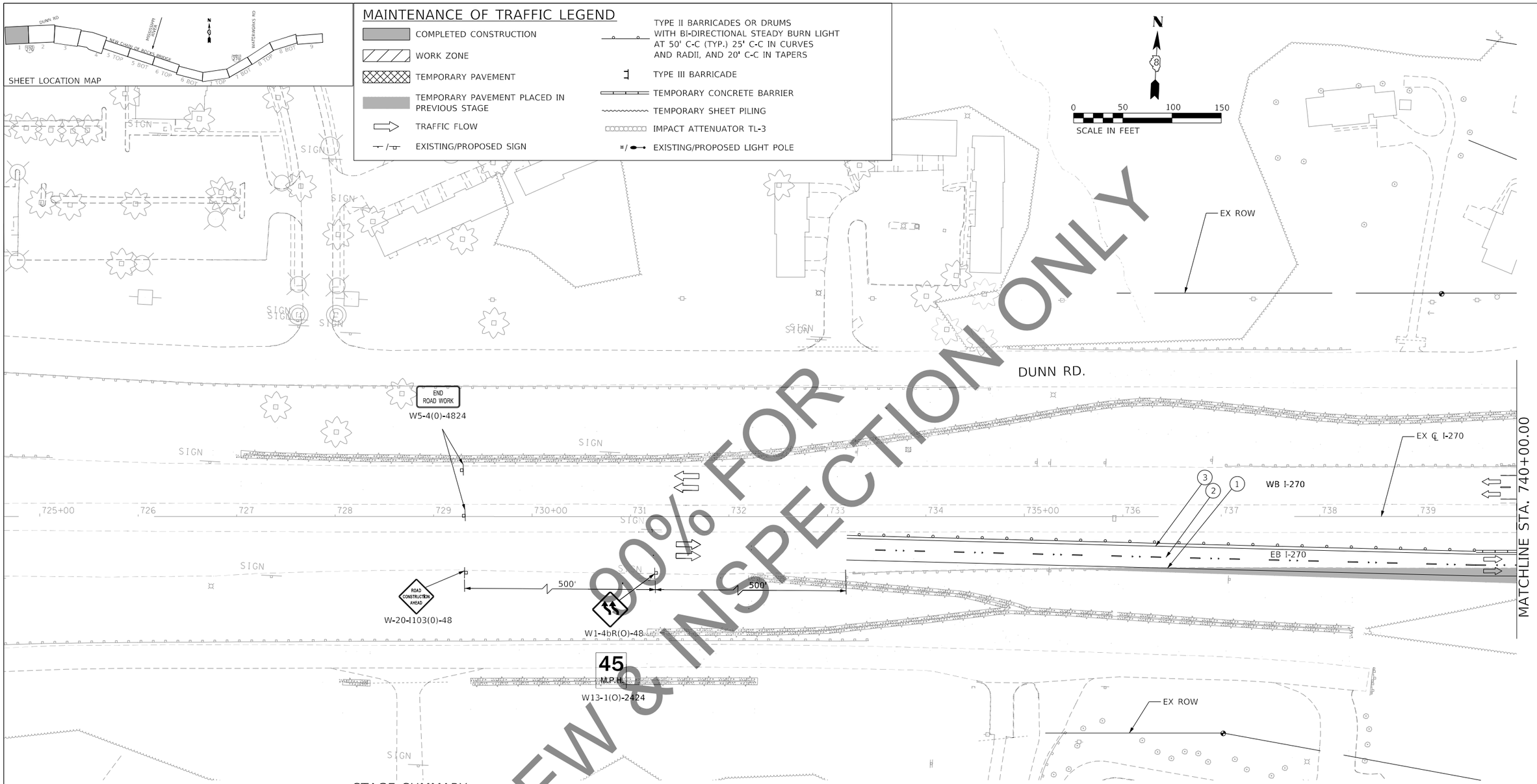

STAGE SUMMARY

MOT PHASE 2C:

1. SHIFT EASTBOUND AND WESTBOUND ON THE NEW EB/WB RIVER BRIDGES.

2. ON THE ILLINOIS SIDE, MAINTAIN EASTBOUND AND WESTBOUND I-270 TRAFFIC TO THE OUTSIDE ON THE NEW PAVEMENT.

3. CONSTRUCT THE NEW MEDIAN BARRIER AND ADJACENT SHOULDERS AS SHOWN ON THE PLANS.

(1) WHITE PAVEMENT MARKING TAPE, TYPE III 4"

(2) WHITE DASHED PAVEMENT MARKING TAPE, TYPE III 4"

(3) YELLOW PAVEMENT MARKING TAPE, TYPE III 4"

NOTE: SHEET INCLUDED FOR REFERENCE ONLY. SEE MoDOT RIVERVIEW DRIVE PLANS FOR ADDITIONAL INFORMATION.

MODEL: Default
FILE NAME: C:\CS4PDF\998145086_146\D76190-sht-mot-PH2C-01.dgn

HORNER & SHIFRIN
Teaming with: PARSONS

USER NAME = PWICS$	DESIGNED - RO	REVISED -	
	DRAWN - SQ	REVISED -	
PLOT SCALE = 50.0000 ' / in.	CHECKED - JB	REVISED -	
PLOT DATE = 11/17/2021	DATE - 2021/07/27	REVISED -	

STATE OF ILLINOIS
DEPARTMENT OF TRANSPORTATION

FAI 270 TRAFFIC CONTROL PLAN
PHASE 2C

SCALE: 1" = 50' | SHEET 1 OF 9 SHEETS | STA. TO STA. 740+00.00

F.A. RTE.	SECTION	COUNTY	TOTAL SHEETS	SHEET NO.
270	60B-1	MADISON	860	1236
		CONTRACT NO. 76J90		
		ILLINOIS	FED. AID PROJECT	

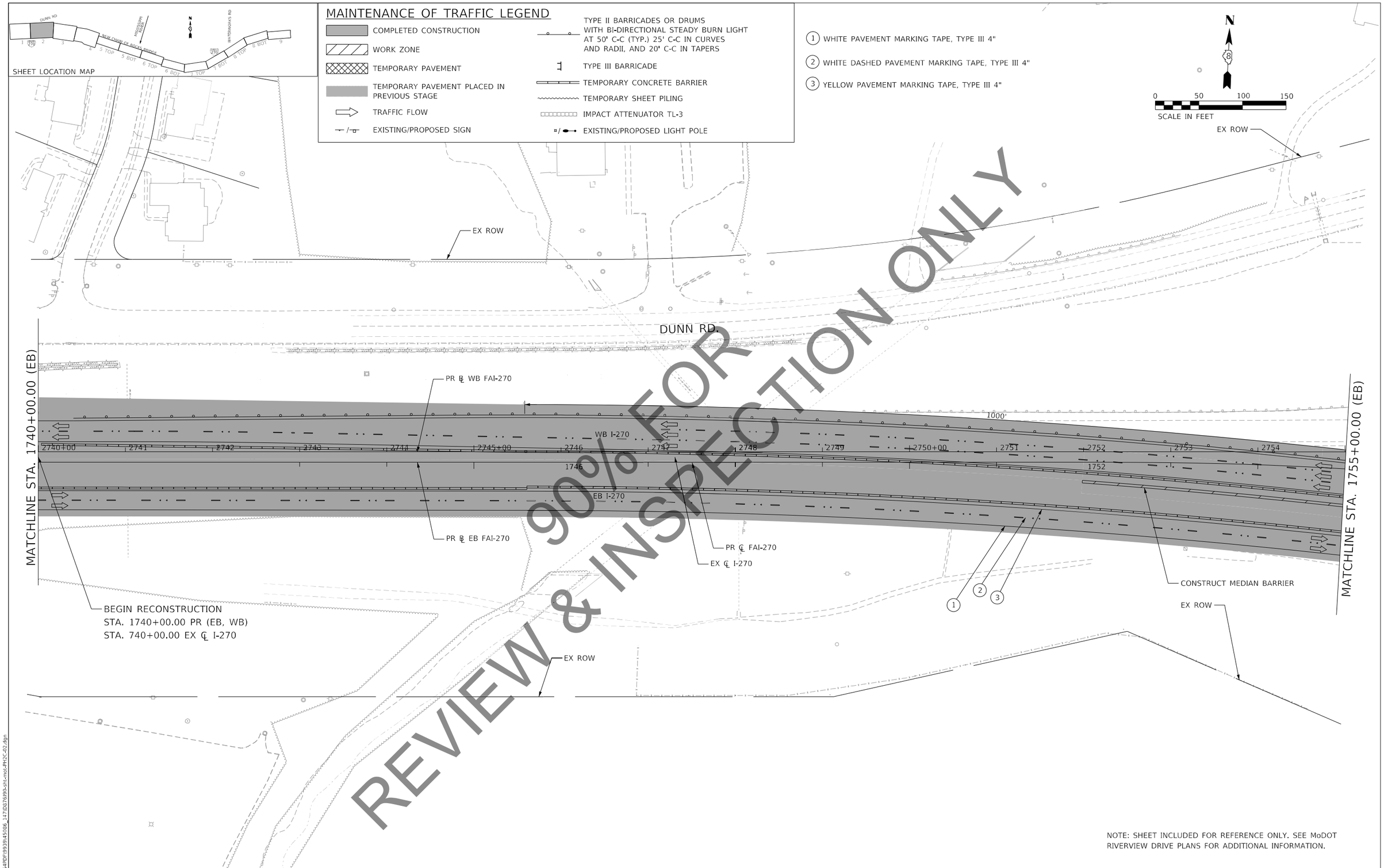

NOTE: SHEET INCLUDED FOR REFERENCE ONLY. SEE MoDOT RIVERVIEW DRIVE PLANS FOR ADDITIONAL INFORMATION.

MODEL: Default
FILE NAME: C:\ICS4PDF\9939\45086_1471D76J90-sht-mst-PH2C-02.dgn

HORNER & SHIFRIN
Teaming with: PARSONS

USER NAME = PWICS$	DESIGNED - RO	REVISED -	
	DRAWN - SQ	REVISED -	
PLOT SCALE = 50.0000 ' / in.	CHECKED - JB	REVISED -	
PLOT DATE = 11/12/2021	DATE - 2021/07/27	REVISED -	

STATE OF ILLINOIS
DEPARTMENT OF TRANSPORTATION

FAI 270 TRAFFIC CONTROL PLAN
PHASE 2C

SCALE: 1" = 50' | SHEET 2 OF 9 SHEETS | STA. 1740+00.00 TO STA. 1755+00.00

F.A. RTE.	SECTION	COUNTY	TOTAL SHEETS	SHEET NO.
270	60B-1	MADISON	860	122

CONTRACT NO. 76J90

ILLINOIS | FED. AID PROJECT

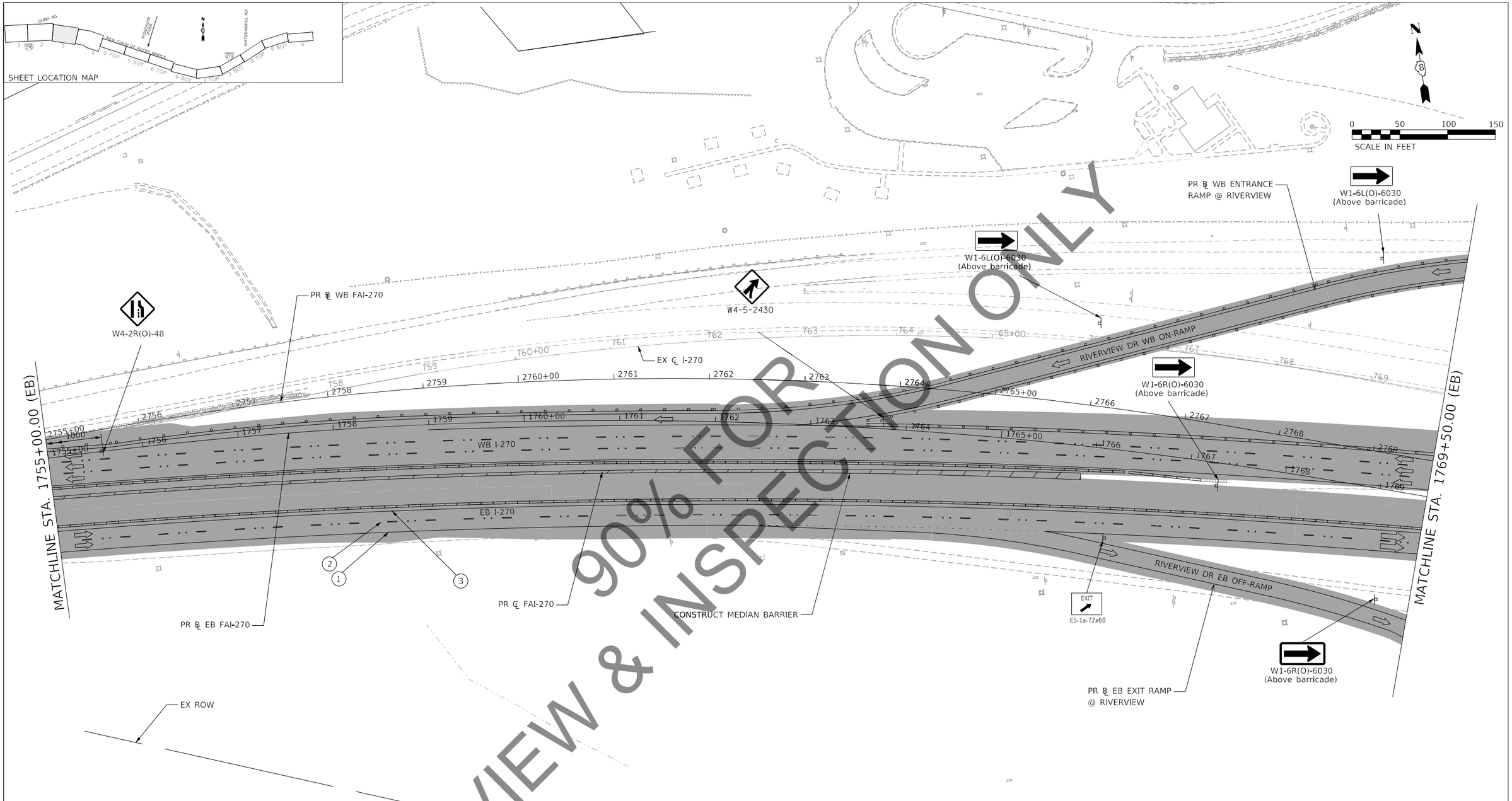

MAINTENANCE OF TRAFFIC LEGEND

- COMPLETED CONSTRUCTION
- WORK ZONE
- TEMPORARY PAVEMENT
- TEMPORARY PAVEMENT PLACED IN PREVIOUS STAGE
- TRAFFIC FLOW
- EXISTING/PROPOSED SIGN
- TYPE II BARRICADES OR DRUMS WITH BI-DIRECTIONAL STEADY BURN LIGHT AT 50' C-C (TYP.) 25' C-C IN CURVES AND RADII, AND 20' C-C IN TAPERS
- TYPE III BARRICADE
- TEMPORARY CONCRETE BARRIER
- TEMPORARY SHEET PILING
- IMPACT ATTENUATOR TL-3
- EXISTING/PROPOSED LIGHT POLE

1. WHITE PAVEMENT MARKING TAPE, TYPE III 4"
2. WHITE DASHED PAVEMENT MARKING TAPE, TYPE III 4"
3. YELLOW PAVEMENT MARKING TAPE, TYPE III 4"

NOTE: SHEET INCLUDED FOR REFERENCE ONLY. SEE MoDOT RIVERVIEW DRIVE PLANS FOR ADDITIONAL INFORMATION.

MODEL: Default
FILE NAME: C:\ICS4PDF\09339\45086_148\D676190-pn-mot-PH2C-03.dgn

HORNER & SHIFRIN
Teaming with: PARSONS

USER NAME = PWICS$	DESIGNED - RO	REVISED -	
	DRAWN - SQ	REVISED -	
PLOT SCALE = 50.0000 ' / in.	CHECKED - JB	REVISED -	
PLOT DATE = 11/12/2021	DATE - 2021/07/27	REVISED -	

STATE OF ILLINOIS
DEPARTMENT OF TRANSPORTATION

FAI 270 TRAFFIC CONTROL PLAN
PHASE 2C

SCALE: 1" = 50' | SHEET 3 OF 9 SHEETS | STA. 1755+00.00 TO STA. 1769+50.00

F.A. RTE.	SECTION	COUNTY	TOTAL SHEETS	SHEET NO.
270	60B-1	MADISON	860	1238
		CONTRACT NO. 76J90		
		ILLINOIS	FED. AID PROJECT	

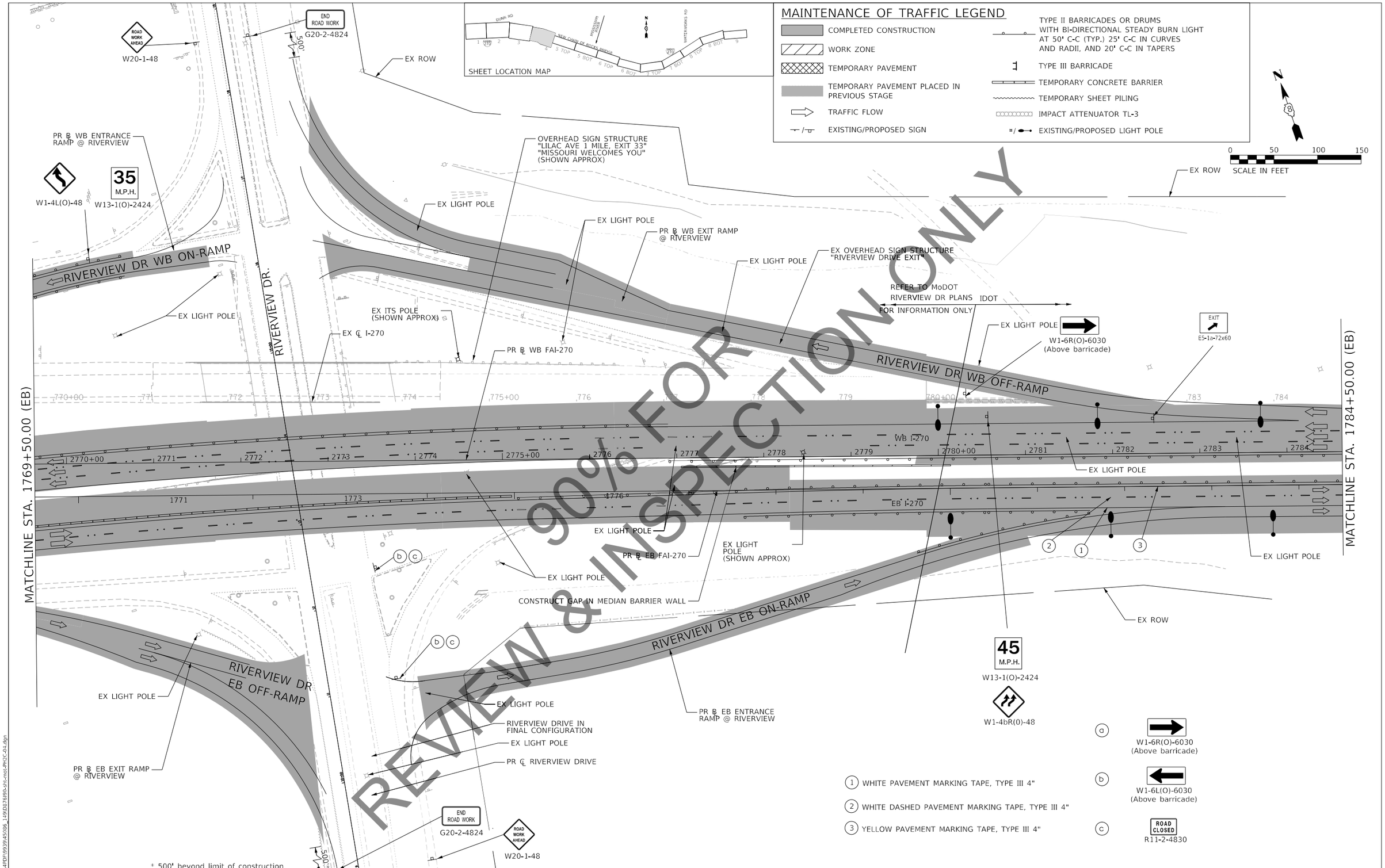

MODEL: Default
FILE NAME: C:\ICS4PDF\9939\45086_749D876\99-sht-cmpl-PH2C-dta.dgn

HORNER & SHIFRIN / Teaming with: PARSONS	USER NAME = PWICS$	DESIGNED - RO	REVISED -
		DRAWN - SQ	REVISED -
	PLOT SCALE = 50.0000 ' / in.	CHECKED - JB	REVISED -
	PLOT DATE = 11/12/2021	DATE - 2021/07/27	REVISED -

STATE OF ILLINOIS
DEPARTMENT OF TRANSPORTATION

FAI 270 TRAFFIC CONTROL PLAN
PHASE 2C

SCALE: 1" = 50' | SHEET 4 OF 9 SHEETS | STA. 1769+50.00 TO STA. 1784+50.00

F.A. RTE.	SECTION	COUNTY	TOTAL SHEETS	SHEET NO.
270	60B-1	MADISON	860	124
		CONTRACT NO. 76J90		
		ILLINOIS	FED. AID PROJECT	

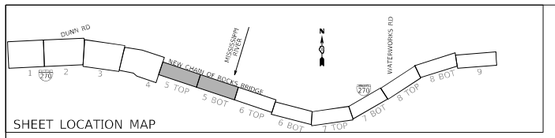

SHEET LOCATION MAP

MAINTENANCE OF TRAFFIC LEGEND

- COMPLETED CONSTRUCTION
- WORK ZONE
- TEMPORARY PAVEMENT
- TEMPORARY PAVEMENT PLACED IN PREVIOUS STAGE
- TRAFFIC FLOW
- EXISTING/PROPOSED SIGN
- TYPE II BARRICADES OR DRUMS WITH BI-DIRECTIONAL STEADY BURN LIGHT AT 50' C-C (TYP.) 25' C-C IN CURVES AND RADII, AND 20' C-C IN TAPERS
- TYPE III BARRICADE
- TEMPORARY CONCRETE BARRIER
- TEMPORARY SHEET PILING
- IMPACT ATTENUATOR TL-3
- EXISTING/PROPOSED LIGHT POLE

N

0 50 100 150

SCALE IN FEET

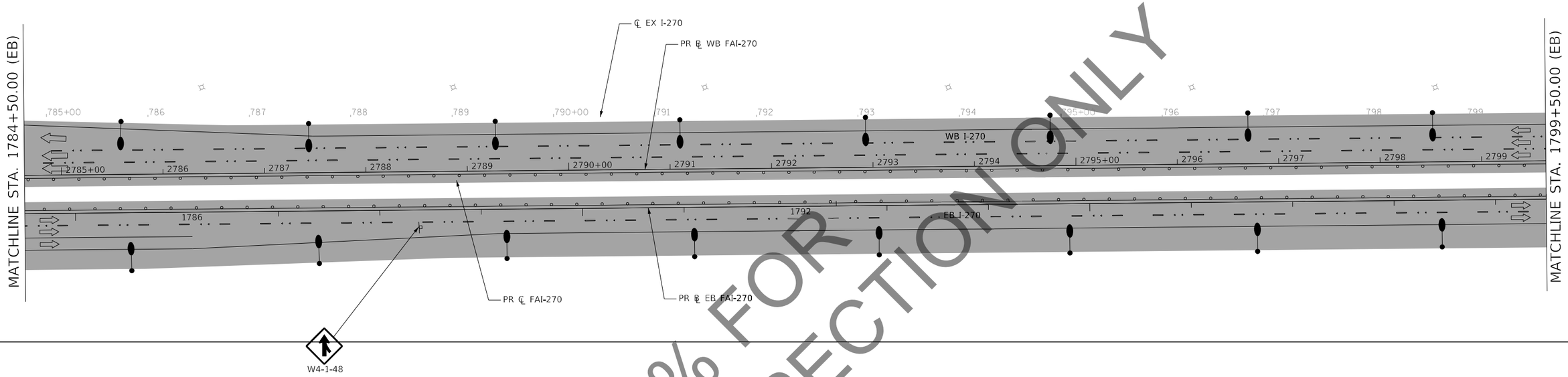

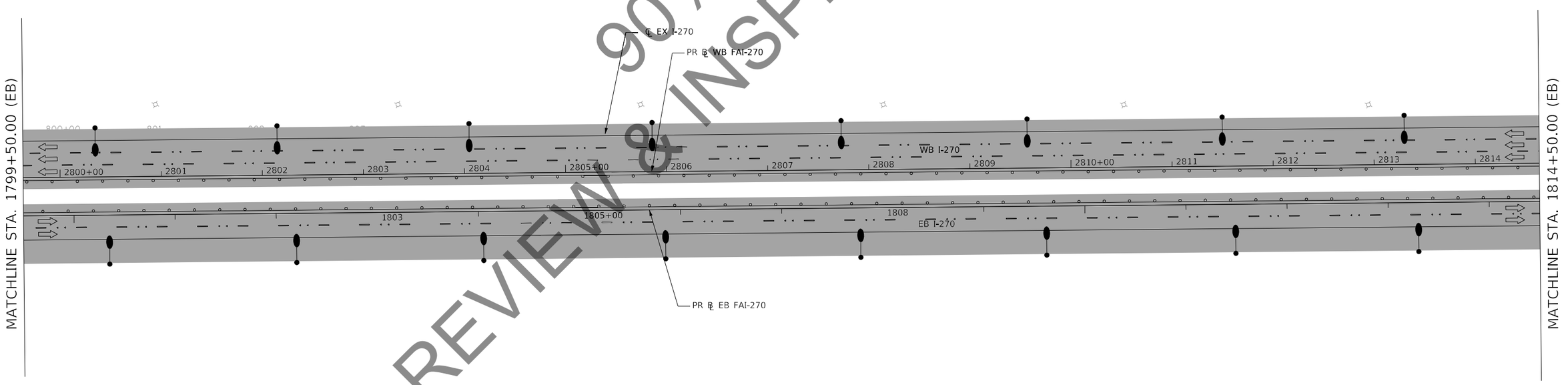

MODEL: Default
FILE NAME: C:\CS4PDF\9939\45086_1500D876J90-sht-mod-PH2C-05.dgn

HORNER & SHIFRIN — Teaming with: PARSONS	USER NAME = PWICS$	DESIGNED - RO	REVISED -
		DRAWN - SQ	REVISED -
	PLOT SCALE = 50.0000 ' / in.	CHECKED - JB	REVISED -
	PLOT DATE = 11/12/2021	DATE - 2021/07/27	REVISED -

STATE OF ILLINOIS
DEPARTMENT OF TRANSPORTATION

FAI 270 TRAFFIC CONTROL PLAN
PHASE 2C

SCALE: 1" = 50' | SHEET 5 OF 9 SHEETS | STA. 1784+50.00 TO STA. 1814+50.00

F.A. RTE.	SECTION	COUNTY	TOTAL SHEETS	SHEET NO.
270	60B-1	MADISON	860	125

CONTRACT NO. 76J90

ILLINOIS | FED. AID PROJECT

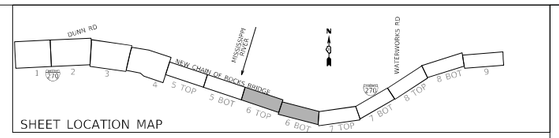

MAINTENANCE OF TRAFFIC LEGEND

- COMPLETED CONSTRUCTION
- WORK ZONE
- TEMPORARY PAVEMENT
- TEMPORARY PAVEMENT PLACED IN PREVIOUS STAGE
- TRAFFIC FLOW
- EXISTING/PROPOSED SIGN
- TYPE II BARRICADES OR DRUMS WITH BI-DIRECTIONAL STEADY BURN LIGHT AT 50' C-C (TYP.) 25' C-C IN CURVES AND RADII, AND 20' C-C IN TAPERS
- TYPE III BARRICADE
- TEMPORARY CONCRETE BARRIER
- TEMPORARY SHEET PILING
- IMPACT ATTENUATOR TL-3
- EXISTING/PROPOSED LIGHT POLE

1. WHITE PAVEMENT MARKING TAPE, TYPE III 4"
2. WHITE DASHED PAVEMENT MARKING TAPE, TYPE III 4"
3. YELLOW PAVEMENT MARKING TAPE, TYPE III 4"

N

0 50 100 150
SCALE IN FEET

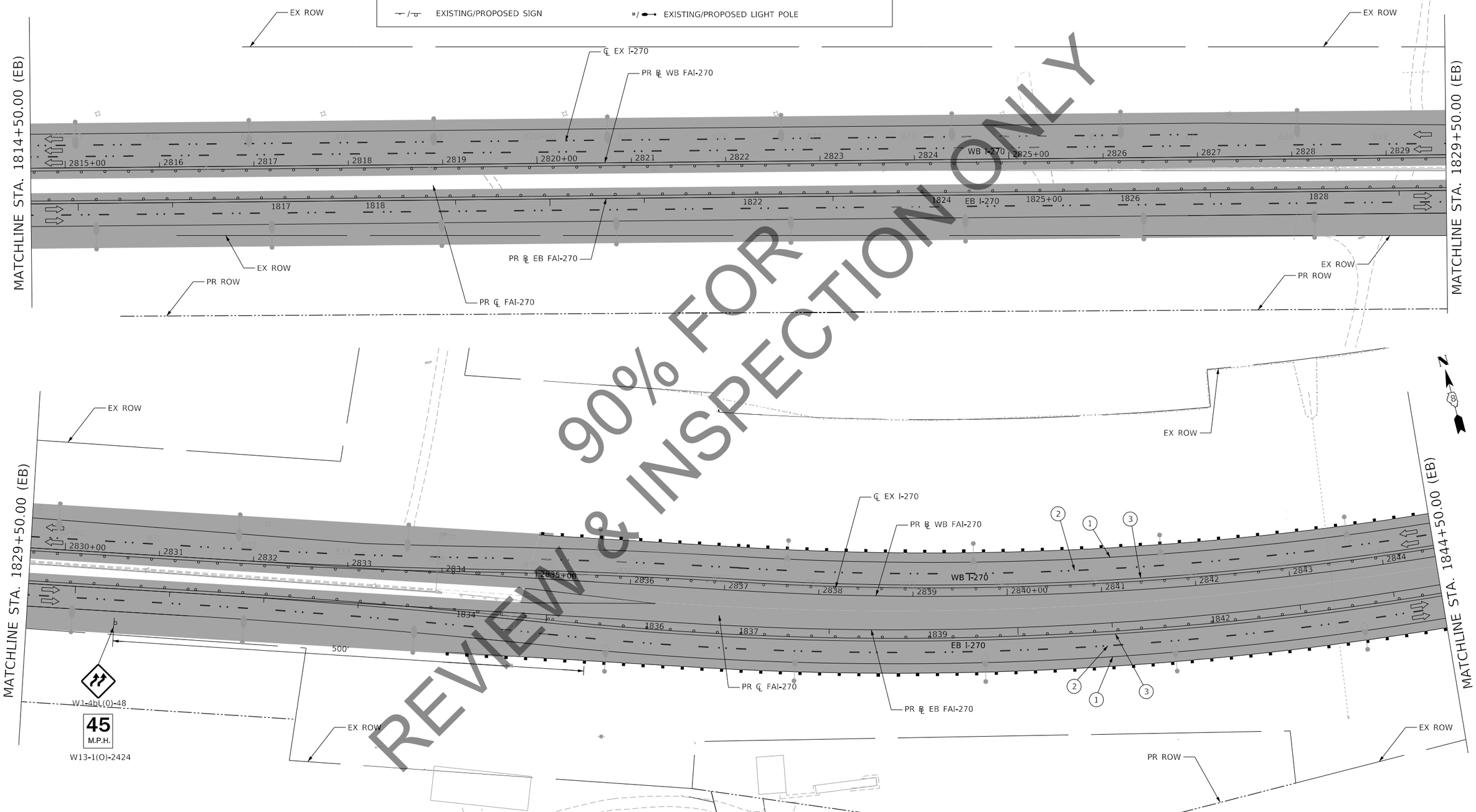

MODEL: Default
FILE NAME: C:\CS4PDF\9939\45086_1510D76H0-sht-mot-PH2C-06.dgn

HORNER & SHIFRIN	USER NAME = PWICS$	DESIGNED - RO	REVISED -
		DRAWN - SQ	REVISED -
Teaming with: PARSONS	PLOT SCALE = 50.0000 ' / in.	CHECKED - JB	REVISED -
	PLOT DATE = 11/12/2021	DATE - 2021/07/27	REVISED -

STATE OF ILLINOIS
DEPARTMENT OF TRANSPORTATION

FAI 270 TRAFFIC CONTROL PLAN
PHASE 2C

SCALE: 1" = 50' | SHEET 6 OF 9 SHEETS | STA. 1814+50.00 TO STA. 1844+50.00

F.A. RTE.	SECTION	COUNTY	TOTAL SHEETS	SHEET NO.
270	60B-1	MADISON	860	126

CONTRACT NO. 76J90

ILLINOIS | FED. AID PROJECT

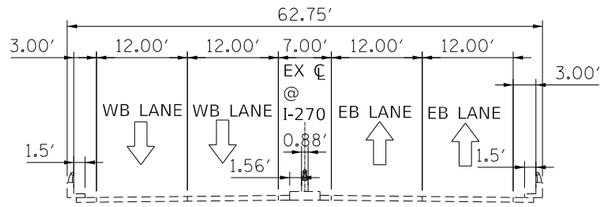

EXISTING F.A.I. ROUTE 270 TYPICAL SECTION
BRIDGE OVER MISSISSIPPI

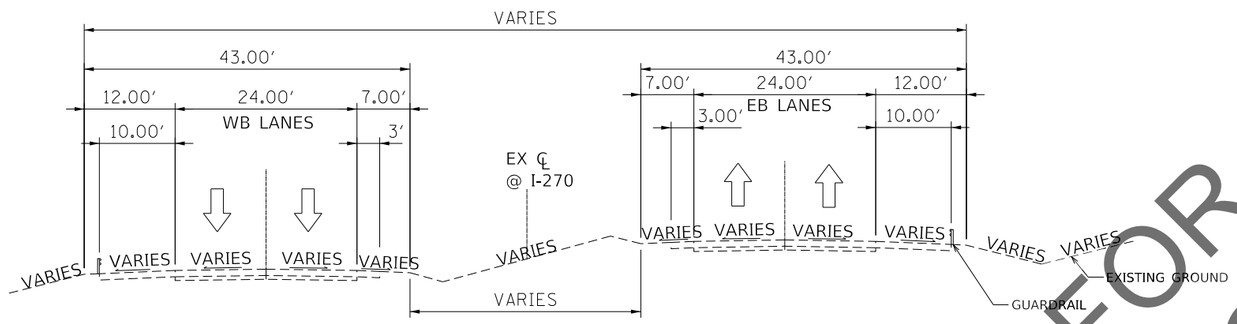

EXISTING F.A.I. ROUTE 270 TYPICAL SECTION
MISSOURI SIDE

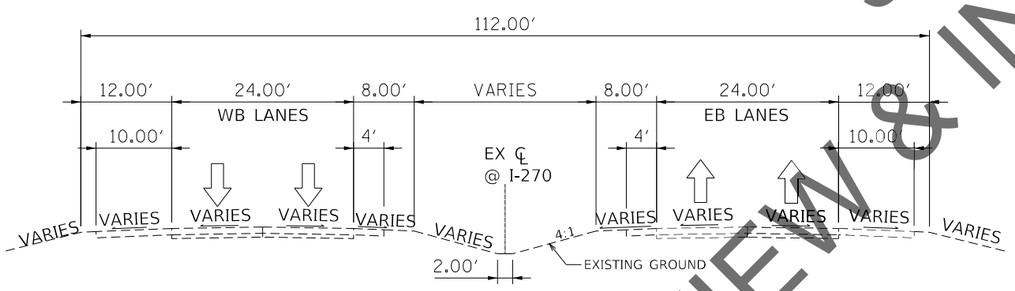

EXISTING F.A.I. ROUTE 270 TYPICAL SECTION
ILLINOIS SIDE

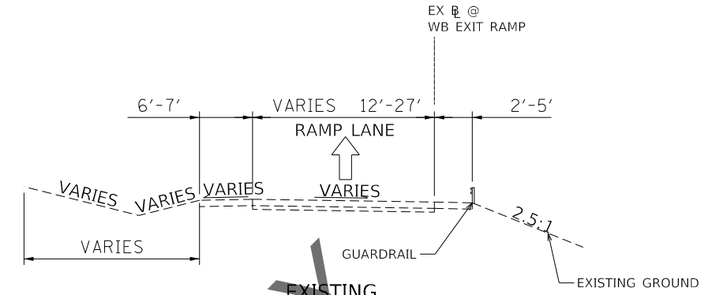

EXISTING
WB EXIT RAMP

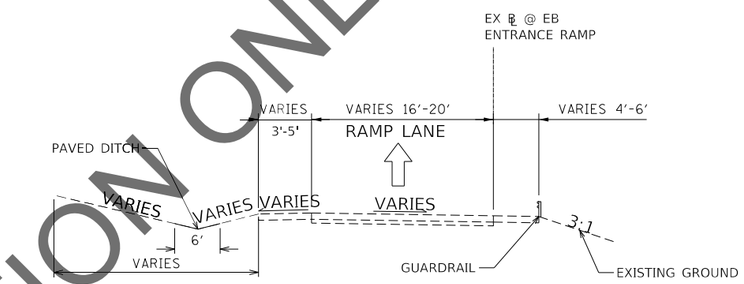

EXISTING
EB ENTRANCE RAMP

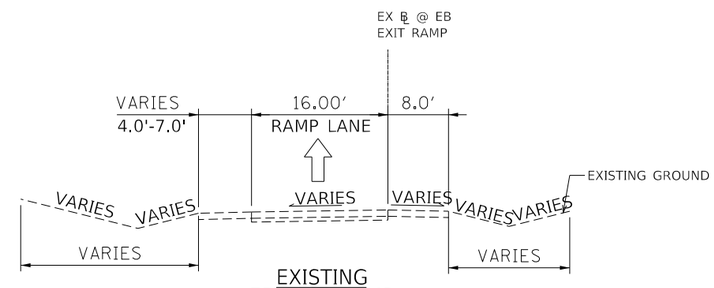

EXISTING
EB EXIT RAMP

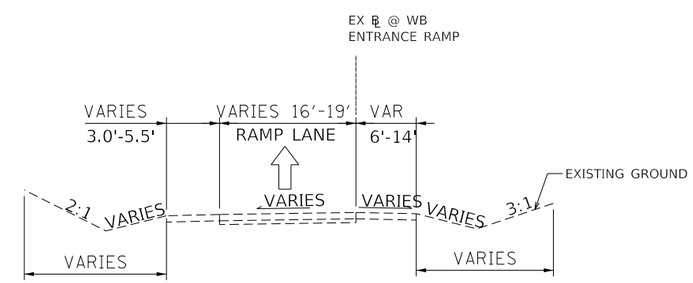

EXISTING
WB ENTRANCE RAMP

MODEL: Default
FILE NAME: C:\ICS4PDF\99394508_91\D6769\0-sht-mot-typical 01.dgn

HORNER & SHIFRIN Teaming with: PARSONS	USER NAME = PWICS$	DESIGNED -	REVISED -	STATE OF ILLINOIS DEPARTMENT OF TRANSPORTATION	FAI 270 TRAFFIC CONTROL PLAN TYPICAL SECTIONS – EXISTING	F.A. RTE.	SECTION	COUNTY	TOTAL SHEETS / SHEET NO.
		DRAWN -	REVISED -						860 / 127
	PLOT SCALE = 7.5000 ' / in.	CHECKED -	REVISED -			CONTRACT NO.			
	PLOT DATE = 11/12/2021	DATE -	REVISED -		SCALE: / SHEET 1 OF 5 SHEETS / STA. / TO STA.	ILLINOIS	FED. AID PROJECT		

TEMPORARY PAVEMENT SECTIONS:

1. PORTLAND CEMENT CONCRETE SHOULDERS 12"
2. SUBBASE GRANULAR MATERIAL, TYPE A 12"

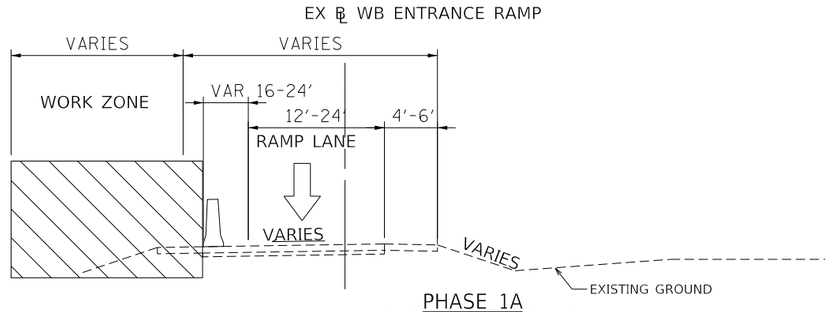

PHASE 1A
WB ENTRANCE RAMP

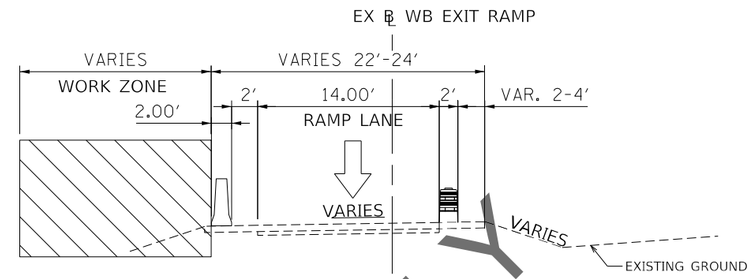

PHASE 1A, 1C & 1D
WB EXIT RAMP

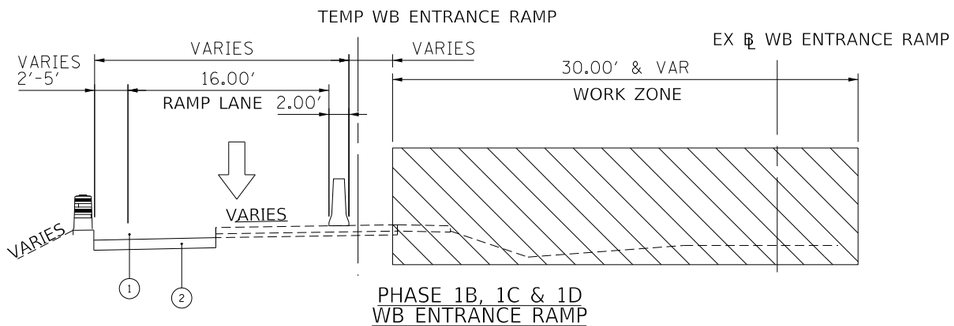

PHASE 1B, 1C & 1D
WB ENTRANCE RAMP

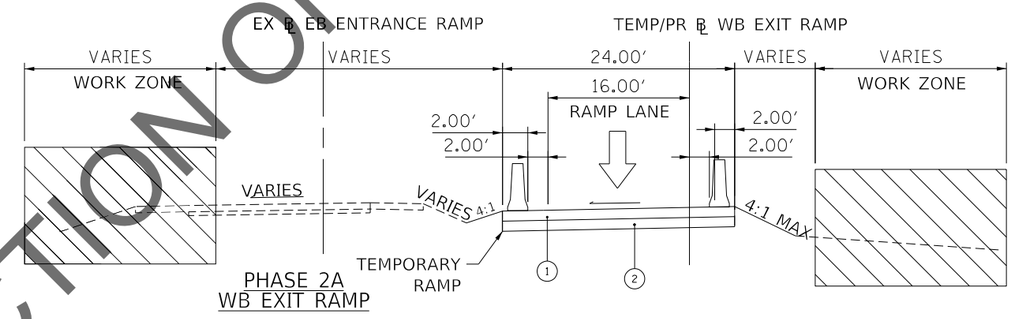

PHASE 2A
WB EXIT RAMP

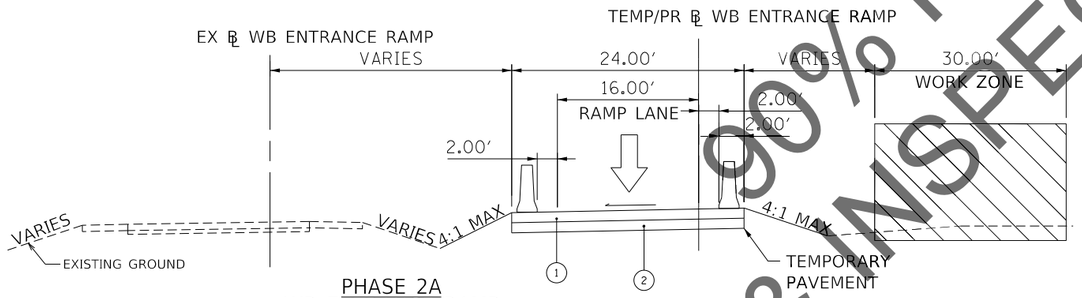

PHASE 2A
WB ENTRANCE RAMP

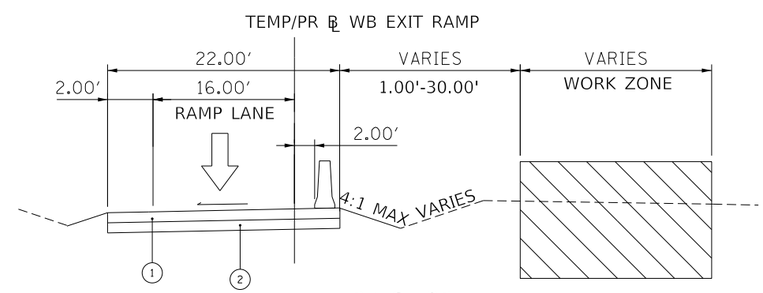

PHASE 2B
WB EXIT RAMP

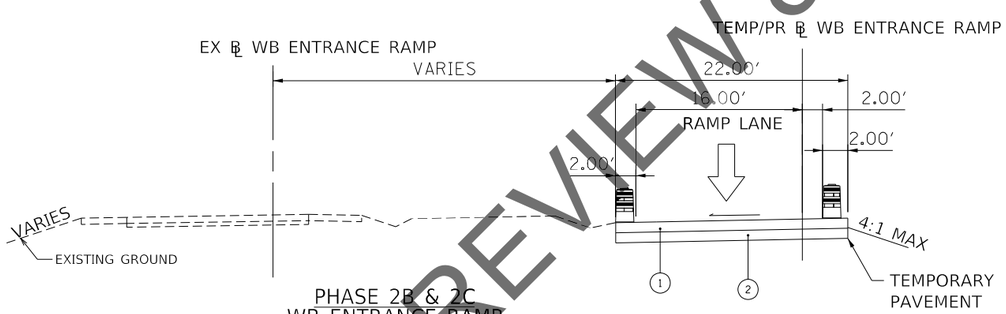

PHASE 2B & 2C
WB ENTRANCE RAMP

MODEL: Default
FILE NAME: C:\CS4PDF\9939\45086_92\D876J90-sht-mot-typical 02.dgn

HORNER & SHIFRIN / Teaming with: PARSONS	USER NAME = PWICS$	DESIGNED -	REVISED -	STATE OF ILLINOIS DEPARTMENT OF TRANSPORTATION	FAI 270 TRAFFIC CONTROL PLAN TYPICAL SECTIONS – WB RAMPS	F.A. RTE.	SECTION	COUNTY	TOTAL SHEETS / SHEET NO.
		DRAWN -	REVISED -						860 / 128
	PLOT SCALE = 7.5000 ' / in.	CHECKED -	REVISED -					CONTRACT NO.	
	PLOT DATE = 11/12/2021	DATE -	REVISED -		SCALE: / SHEET 2 OF 5 SHEETS / STA. / TO STA.		ILLINOIS	FED. AID PROJECT	

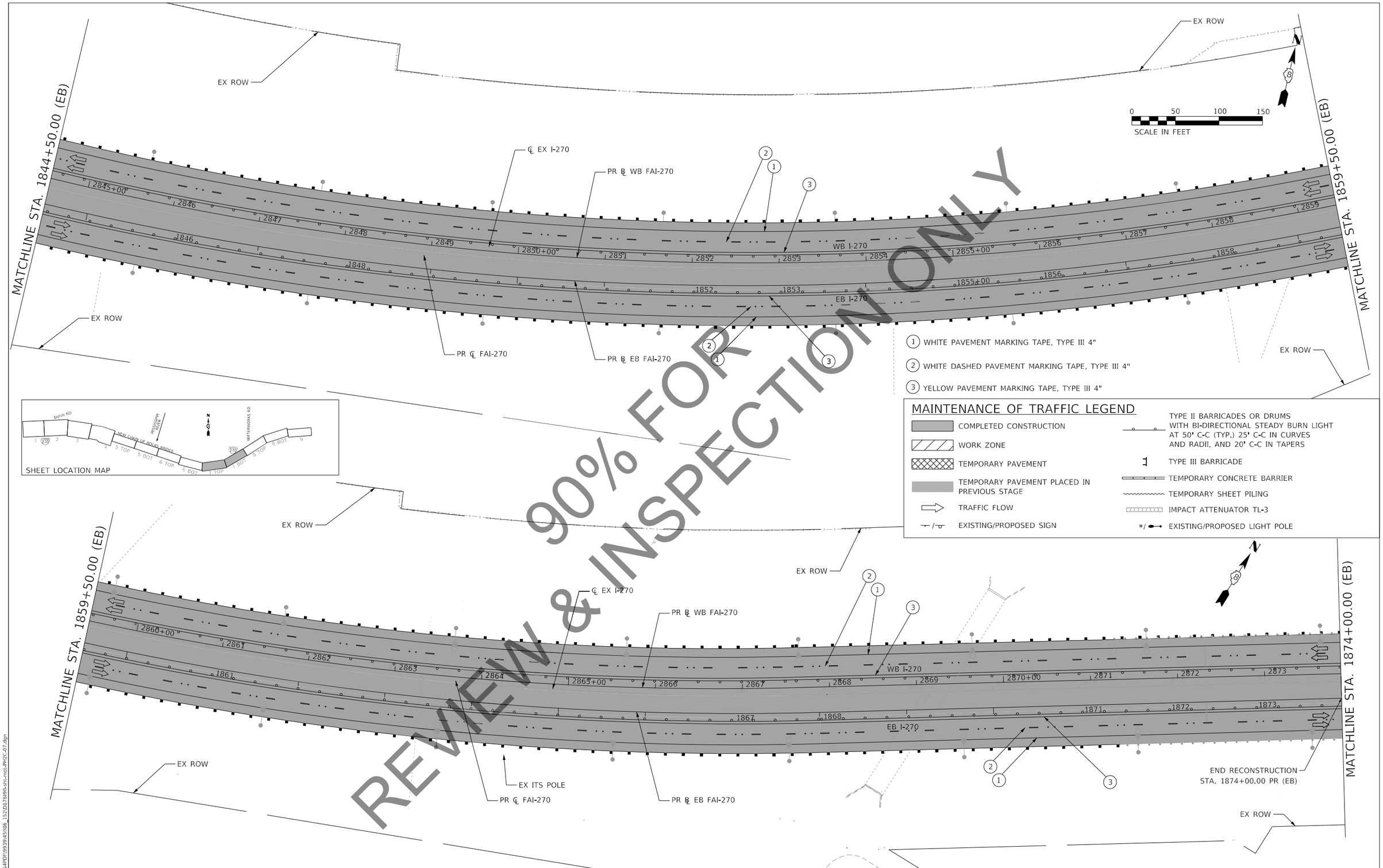

MODEL: Default
FILE NAME: C:\CS4PDF\9939\45086_1520\76J90-sht-mot-PH2C-07.dgn

HORNER & SHIFRIN
Teaming with: PARSONS

USER NAME = PWICS$	DESIGNED - RO	REVISED -	
	DRAWN - SQ	REVISED -	
PLOT SCALE = 50.0000 ' / in.	CHECKED - JB	REVISED -	
PLOT DATE = 11/12/2021	DATE - 2021/07/27	REVISED -	

STATE OF ILLINOIS
DEPARTMENT OF TRANSPORTATION

FAI 270 TRAFFIC CONTROL PLAN
PHASE 2C

SCALE: 1" = 50' | SHEET 7 OF 9 SHEETS | STA. 1844+50.00 TO STA. 1874+00.00

F.A. RTE.	SECTION	COUNTY	TOTAL SHEETS	SHEET NO.
270	60B-1	MADISON	860	129

CONTRACT NO. 76J90
ILLINOIS | FED. AID PROJECT

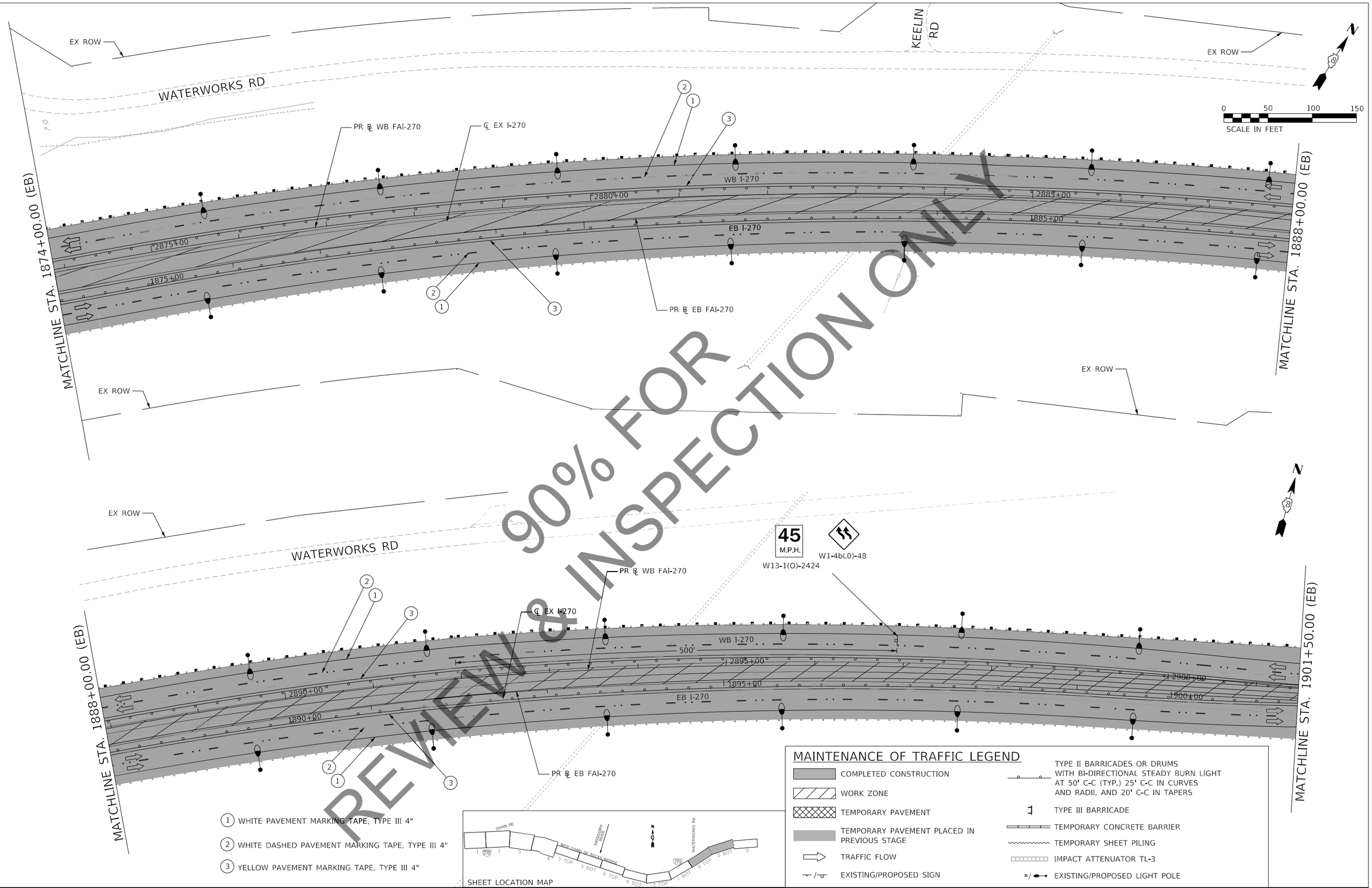

MODEL: Default
FILE NAME: C:\PCS4PDF\9939\45086_153\D6726\90-cnt-mot-PH2C-08.dgn

HORNER & SHIFRIN
Teaming with: PARSONS

USER NAME = PWICS$	DESIGNED - RO	REVISED -	
	DRAWN - SQ	REVISED -	
PLOT SCALE = 50.0000 ' / in.	CHECKED - JB	REVISED -	
PLOT DATE = 11/12/2021	DATE - 2021/07/27	REVISED -	

STATE OF ILLINOIS
DEPARTMENT OF TRANSPORTATION

FAI 270 TRAFFIC CONTROL PLAN
PHASE 2C

SCALE: 1" = 50' | SHEET 8 OF 9 SHEETS | STA. 1874+00.00 TO STA. 1901+50.00

F.A. RTE.	SECTION	COUNTY	TOTAL SHEETS	SHEET NO.
270	60B-1	MADISON	860	1308

CONTRACT NO. 76J90
ILLINOIS | FED. AID PROJECT

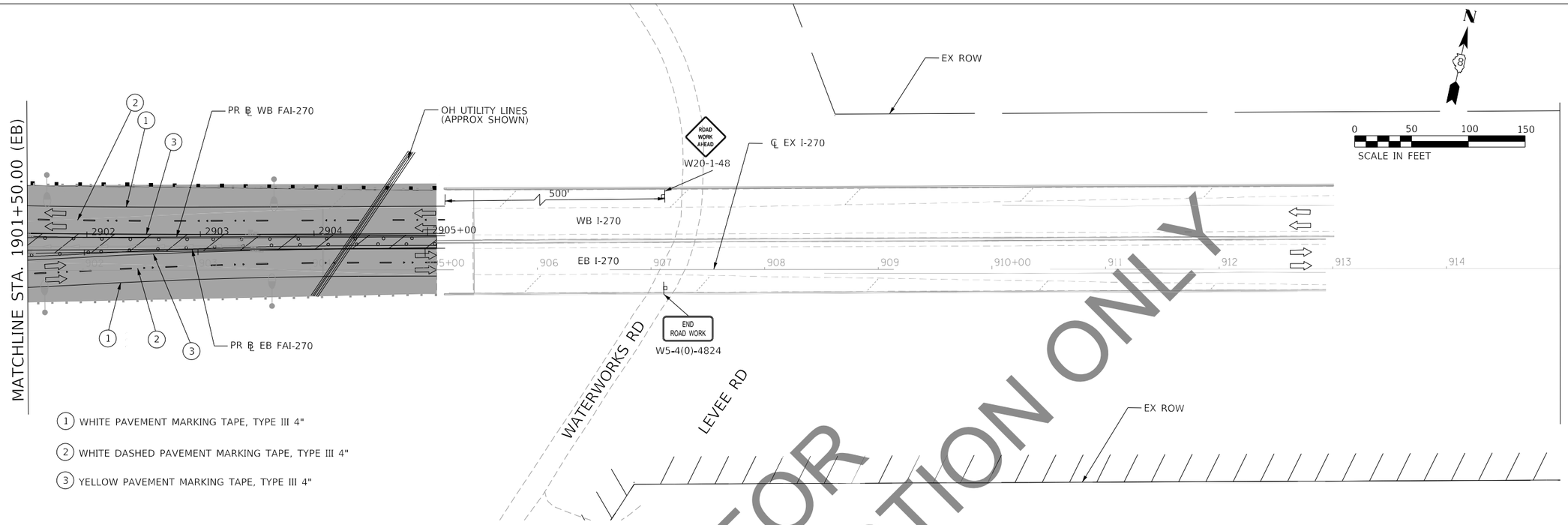

1. WHITE PAVEMENT MARKING TAPE, TYPE III 4"
2. WHITE DASHED PAVEMENT MARKING TAPE, TYPE III 4"
3. YELLOW PAVEMENT MARKING TAPE, TYPE III 4"

SHEET LOCATION MAP

MAINTENANCE OF TRAFFIC LEGEND

- COMPLETED CONSTRUCTION
- WORK ZONE
- TEMPORARY PAVEMENT
- TEMPORARY PAVEMENT PLACED IN PREVIOUS STAGE
- TRAFFIC FLOW
- EXISTING/PROPOSED SIGN
- TYPE II BARRICADES OR DRUMS WITH BI-DIRECTIONAL STEADY BURN LIGHT AT 50' C-C (TYP.) 25' C-C IN CURVES AND RADII, AND 20' C-C IN TAPERS
- TYPE III BARRICADE
- TEMPORARY CONCRETE BARRIER
- TEMPORARY SHEET PILING
- IMPACT ATTENUATOR TL-3
- EXISTING/PROPOSED LIGHT POLE

MODEL: Default
FILE NAME: C:\CS4PDF\99394\5086_1541D676\01-ch1-mot-PH2C-09.dgn

HORNER SHIFRIN
Teaming with: PARSONS

USER NAME = PWICS$	DESIGNED - RO	REVISED -	
	DRAWN - SQ	REVISED -	
PLOT SCALE = 50.0000 ' / in.	CHECKED - JB	REVISED -	
PLOT DATE = 11/12/2021	DATE - 2021/07/27	REVISED -	

STATE OF ILLINOIS
DEPARTMENT OF TRANSPORTATION

FAI 270 TRAFFIC CONTROL PLAN
PHASE 2C

SCALE: 1" = 50' | SHEET 9 OF 9 SHEETS | STA. 1901+50.00 TO STA.

F.A. RTE.	SECTION	COUNTY	TOTAL SHEETS	SHEET NO.
270	60B-1	MADISON	860	13/14

CONTRACT NO. 76J90

ILLINOIS | FED. AID PROJECT

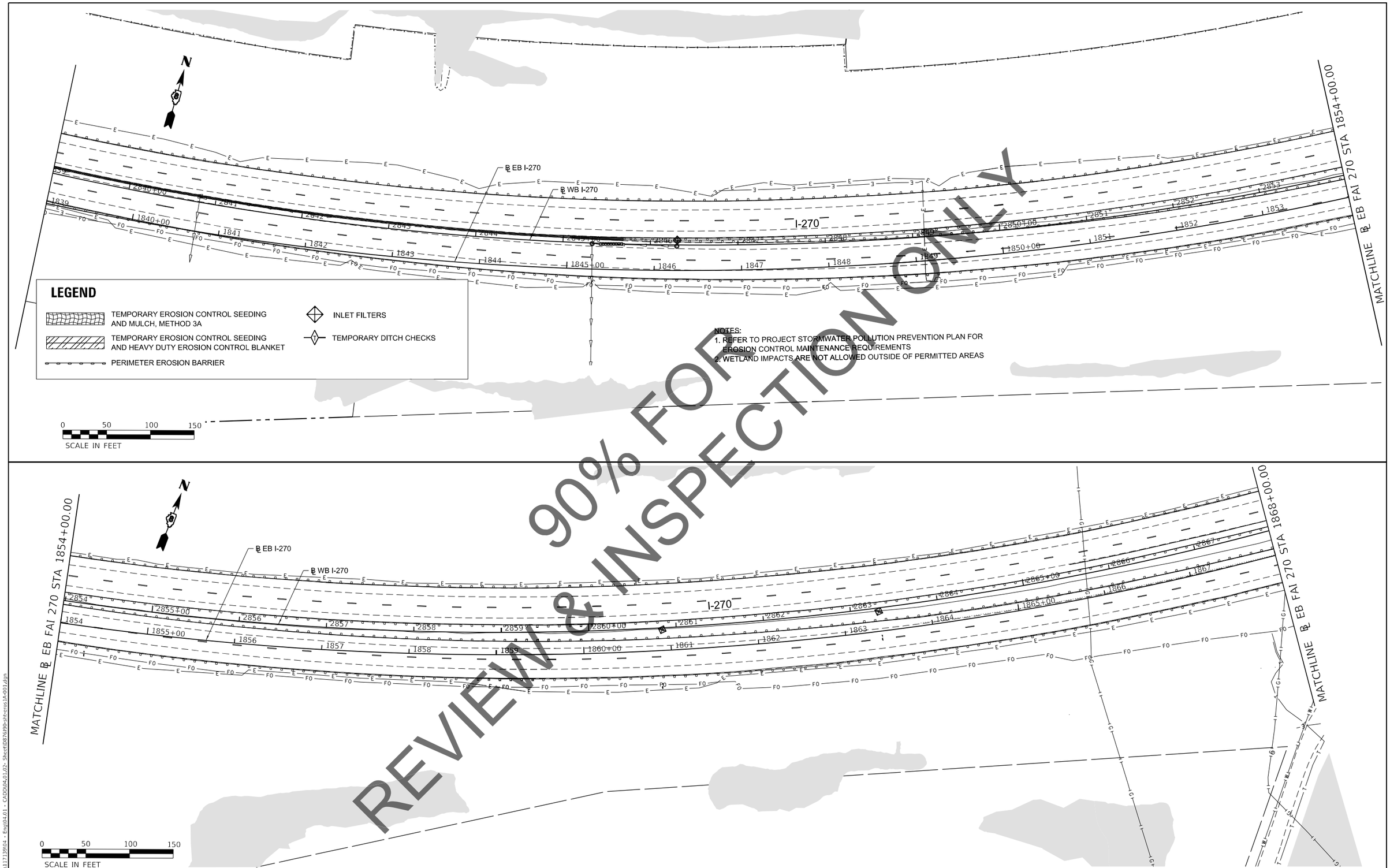

MODEL: Default
FILE NAME: I:\2020\117139\04 - Eng\04.01 - CADD\04.01\02- Sheet\D876J90-sht-cross1A-001.dgn

AMERICAN SURVEYING & ENGINEERING, P.C. SURVEYORS•ENGINEERS GEODESISTS•MAPPING SCIENTISTS	USER NAME = colwellj	DESIGNED - JB	REVISED -	STATE OF ILLINOIS DEPARTMENT OF TRANSPORTATION	FAI–270 EROSION CONTROL – STAGE 1A
		DRAWN - JB	REVISED -		
	PLOT SCALE = 50.0000 ' / in.	CHECKED - JC	REVISED -		
	PLOT DATE = 11/18/2021	DATE - 11/18/2021	REVISED -		SCALE: 1" = 50' SHEET 1 OF 2 SHEETS STA. 1839+00.00 TO STA. 1868+00.00

F.A.I. RTE.	SECTION	COUNTY	TOTAL SHEETS	SHEET NO.
270	60(B)-1	MADISON	860	132
		CONTRACT NO. 76J90		
	ILLINOIS	FED. AID PROJECT		

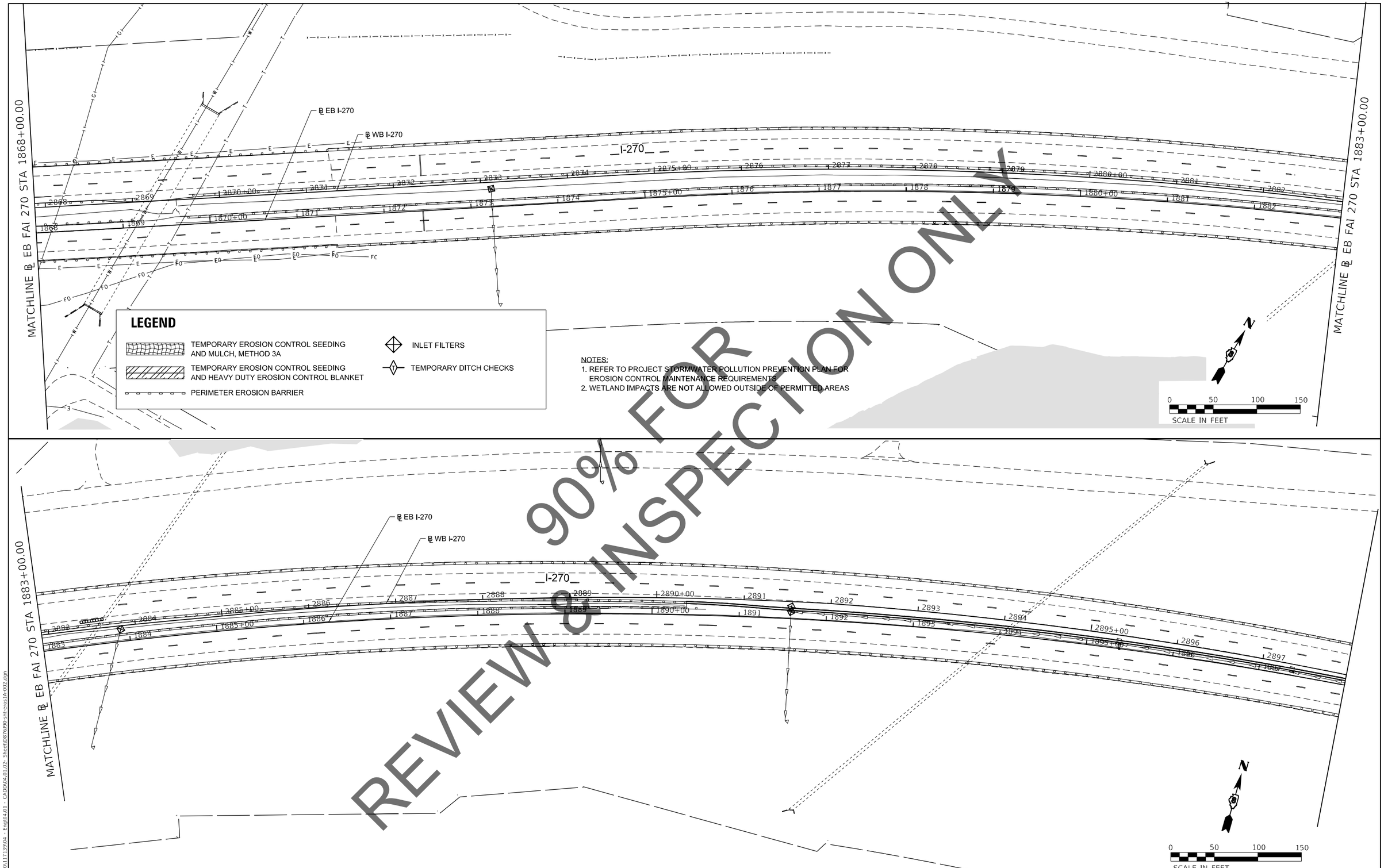

MODEL: Default
FILE NAME: I:\2020\1173904 - Engl04.01 - CADD\04.01.02- Sheet\0876J90-sht-eros1A-002.dgn

AMERICAN
SURVEYING & ENGINEERING, P.C.
SURVEYORS•ENGINEERS
GEODESISTS•MAPPING SCIENTISTS

USER NAME = colwellj	DESIGNED - JB	REVISED -
	DRAWN - JB	REVISED -
PLOT SCALE = 50.0000 ' / in.	CHECKED - JC	REVISED -
PLOT DATE = 11/18/2021	DATE - 11/18/2021	REVISED -

STATE OF ILLINOIS
DEPARTMENT OF TRANSPORTATION

FAI–270
EROSION CONTROL – STAGE 1A

SCALE: 1" = 50' | SHEET 2 OF 2 SHEETS | STA. 1868+00.00 TO STA. 1898+00.00

F.A.I. RTE.	SECTION	COUNTY	TOTAL SHEETS	SHEET NO.
270	60(B)-1	MADISON	860	133
		CONTRACT NO. 76J90		
		ILLINOIS	FED. AID PROJECT	

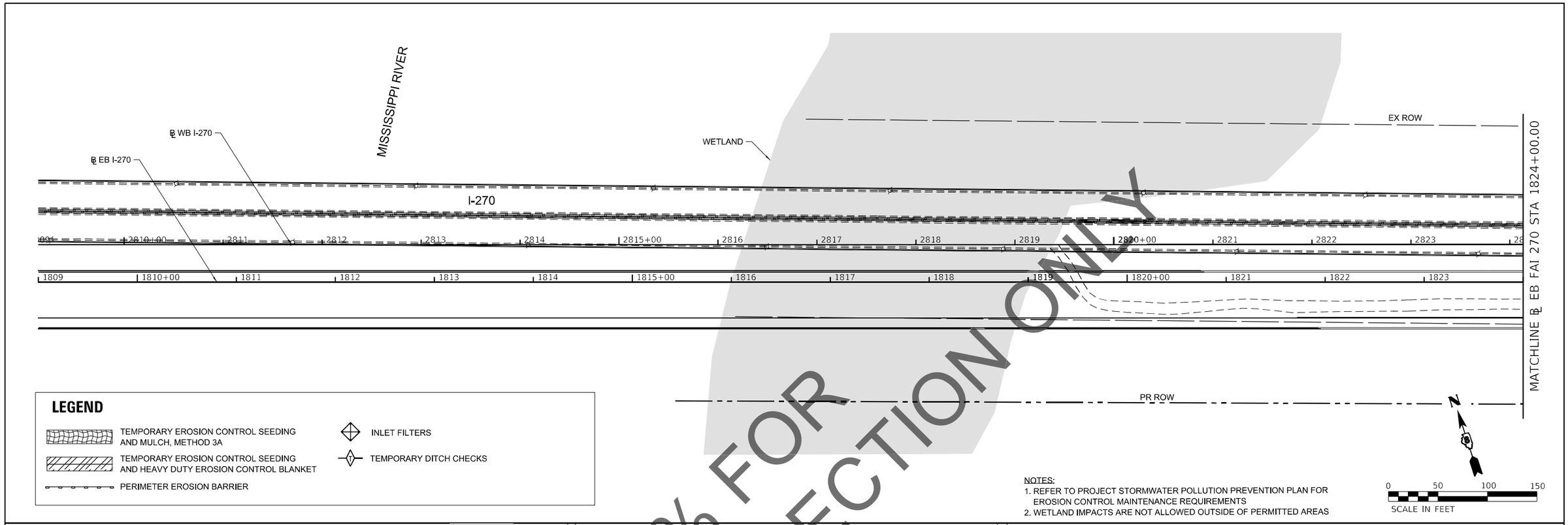

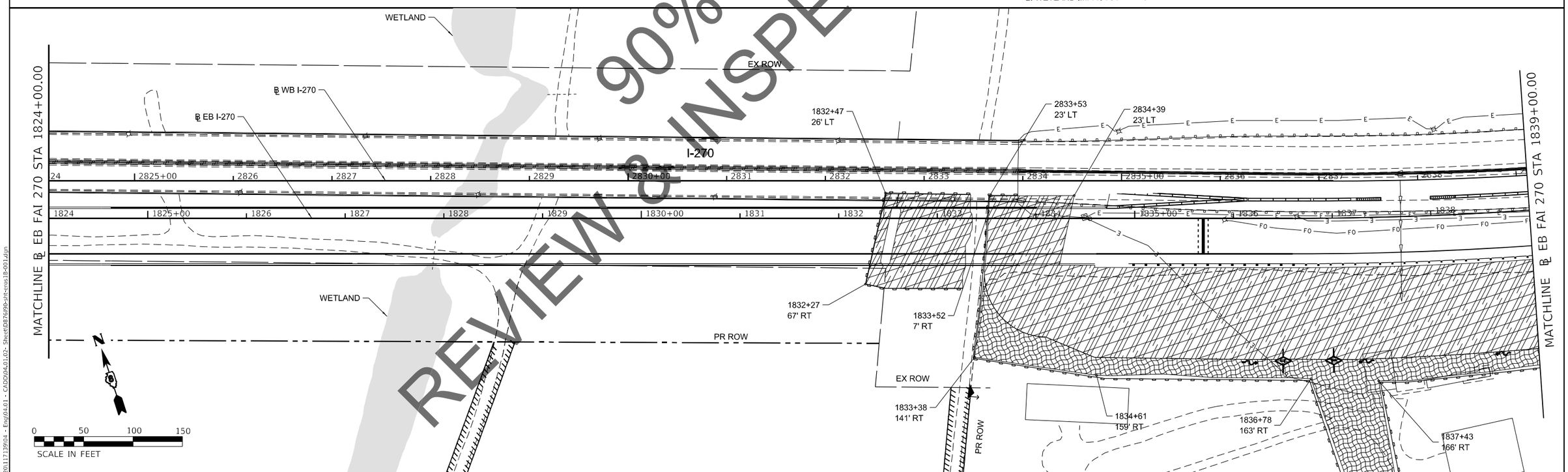

AMERICAN
SURVEYING & ENGINEERING, P.C.
SURVEYORS•ENGINEERS
GEODESISTS•MAPPING SCIENTISTS

USER NAME = colwellj	DESIGNED - JB	REVISED -	
	DRAWN - JB	REVISED -	
PLOT SCALE = 50.0000 ' / in.	CHECKED - JC	REVISED -	
PLOT DATE = 11/18/2021	DATE - 11/18/2021	REVISED -	

STATE OF ILLINOIS
DEPARTMENT OF TRANSPORTATION

FAI–270
EROSION CONTROL – STAGE 1B

SCALE: 1" = 50' | SHEET 1 OF 4 SHEETS | STA. 1809+00.00 TO STA. 1839+00.00

F.A.I. RTE.	SECTION	COUNTY	TOTAL SHEETS	SHEET NO.
270	60(B)-1	MADISON	860	134
		CONTRACT NO. 76J90		
		ILLINOIS	FED. AID PROJECT	

MODEL: Default
FILE NAME: h:\2020\11713904 - Eng\04.01 - CADD\04.01.02- Sheet\D876J90-sht-eros18-001.dgn

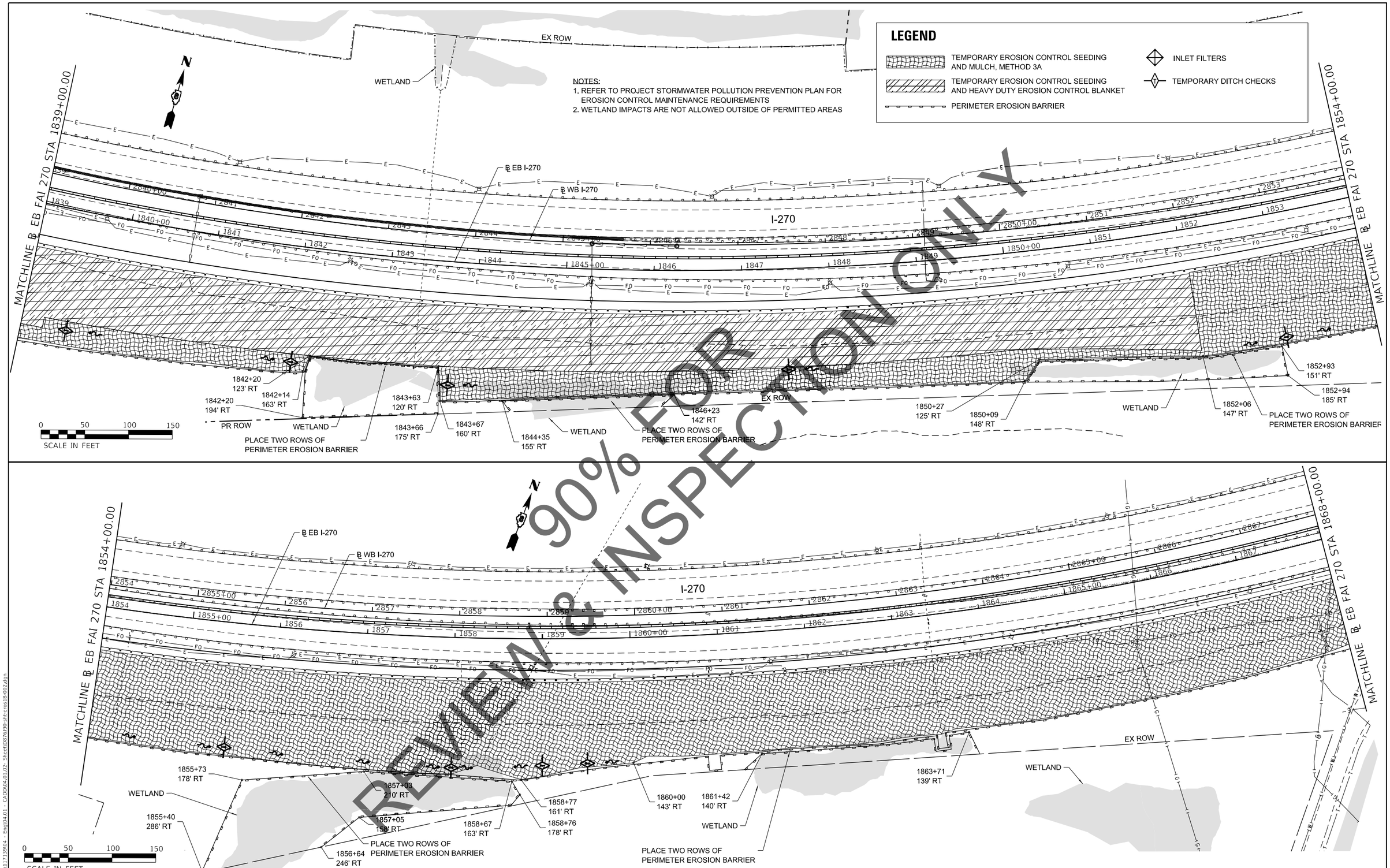

MODEL: Default
FILE NAME: H:\2020\117139\04 - Eng\04.01 - CADD\04.01.02- Sheet\D876190-sht-cross1B-002.dgn

AMERICAN SURVEYING & ENGINEERING, P.C. SURVEYORS•ENGINEERS GEODESISTS•MAPPING SCIENTISTS	USER NAME = colwellj	DESIGNED JC	REVISED -	STATE OF ILLINOIS DEPARTMENT OF TRANSPORTATION	FAI–270 EROSION CONTROL – STAGE 1B	F.A.I. RTE.	SECTION	COUNTY	TOTAL SHEETS / SHEET NO.
		DRAWN JB	REVISED -			270	60(B)-1	MADISON	860 / 135
	PLOT SCALE = 50.0000 ' / in.	CHECKED JC	REVISED -					CONTRACT NO. 76J90	
	PLOT DATE = 11/18/2021	DATE 11/18/21	REVISED -		SCALE: 1" = 50' SHEET 2 OF 4 SHEETS STA. 1839+00.00 TO STA. 1868+00.00			ILLINOIS FED. AID PROJECT	

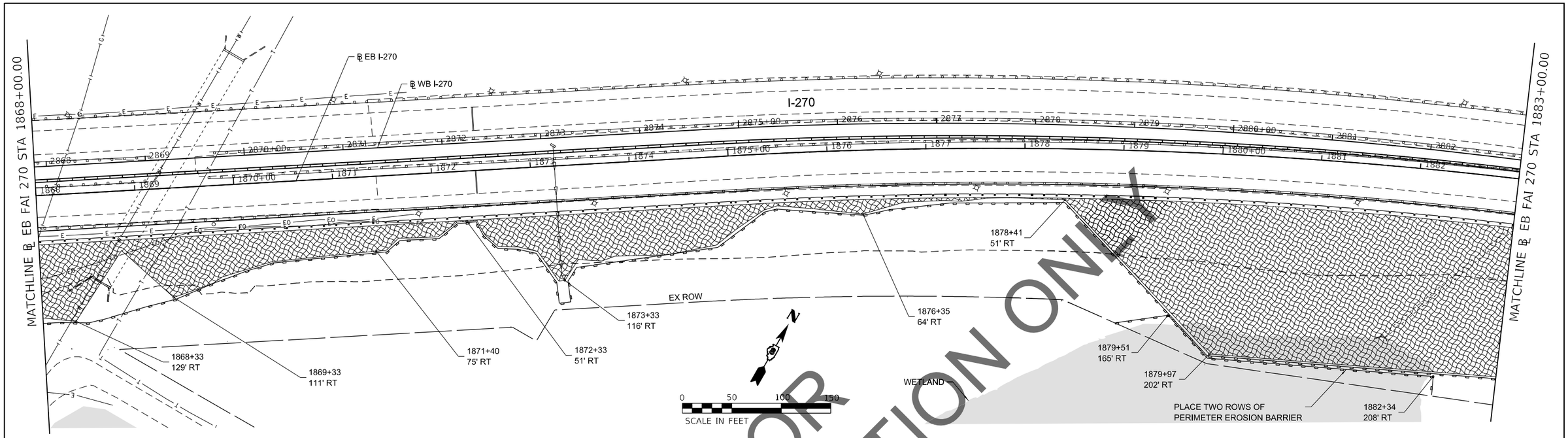

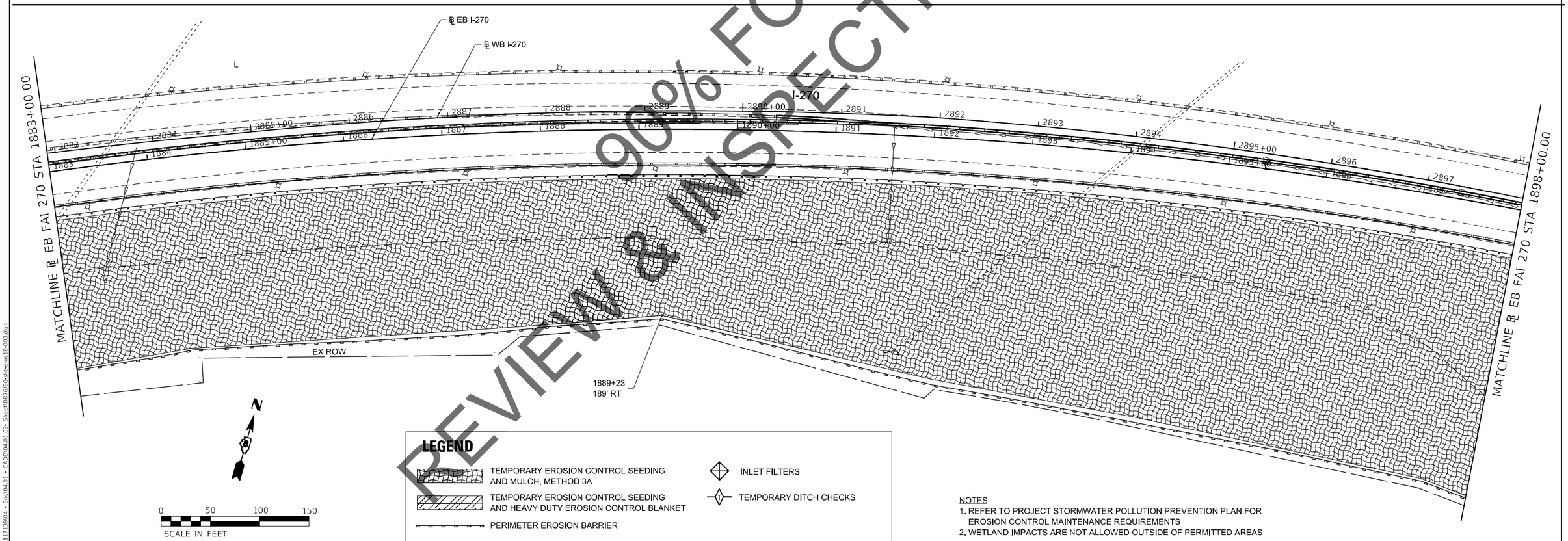

LEGEND

- TEMPORARY EROSION CONTROL SEEDING AND MULCH, METHOD 3A
- TEMPORARY EROSION CONTROL SEEDING AND HEAVY DUTY EROSION CONTROL BLANKET
- PERIMETER EROSION BARRIER
- INLET FILTERS
- TEMPORARY DITCH CHECKS

NOTES
1. REFER TO PROJECT STORMWATER POLLUTION PREVENTION PLAN FOR EROSION CONTROL MAINTENANCE REQUIREMENTS
2. WETLAND IMPACTS ARE NOT ALLOWED OUTSIDE OF PERMITTED AREAS

MODEL: Default
FILE NAME: I:\2020\1713904 - Eng\04.01 - CADD\04.01.02- Sheet\0876J90-sht-eros.18-003.dgn

AMERICAN SURVEYING & ENGINEERING, P.C. SURVEYORS•ENGINEERS GEODESISTS•MAPPING SCIENTISTS

USER NAME = colwellj	DESIGNED JB	REVISED -
	DRAWN JB	REVISED -
PLOT SCALE = 50.0000 ' / in.	CHECKED JC	REVISED -
PLOT DATE = 11/18/2021	DATE 11/18/21	REVISED -

STATE OF ILLINOIS
DEPARTMENT OF TRANSPORTATION

FAI–270
EROSION CONTROL – STAGE 1B

SCALE: 1" = 50' | SHEET 3 OF 4 SHEETS | STA. 1868+00.00 TO STA. 1898+00.00

F.A.I. RTE.	SECTION	COUNTY	TOTAL SHEETS	SHEET NO.
270	60(B)-1	MADISON	860	136
		CONTRACT NO. 76J90		
		ILLINOIS	FED. AID PROJECT	

LEGEND

- TEMPORARY EROSION CONTROL SEEDING AND MULCH, METHOD 3A
- TEMPORARY EROSION CONTROL SEEDING AND HEAVY DUTY EROSION CONTROL BLANKET
- PERIMETER EROSION BARRIER
- INLET FILTERS
- TEMPORARY DITCH CHECKS

NOTES:
1. REFER TO PROJECT STORMWATER POLLUTION PREVENTION PLAN FOR EROSION CONTROL MAINTENANCE REQUIREMENTS
2. WETLAND IMPACTS ARE NOT ALLOWED OUTSIDE OF PERMITTED AREAS

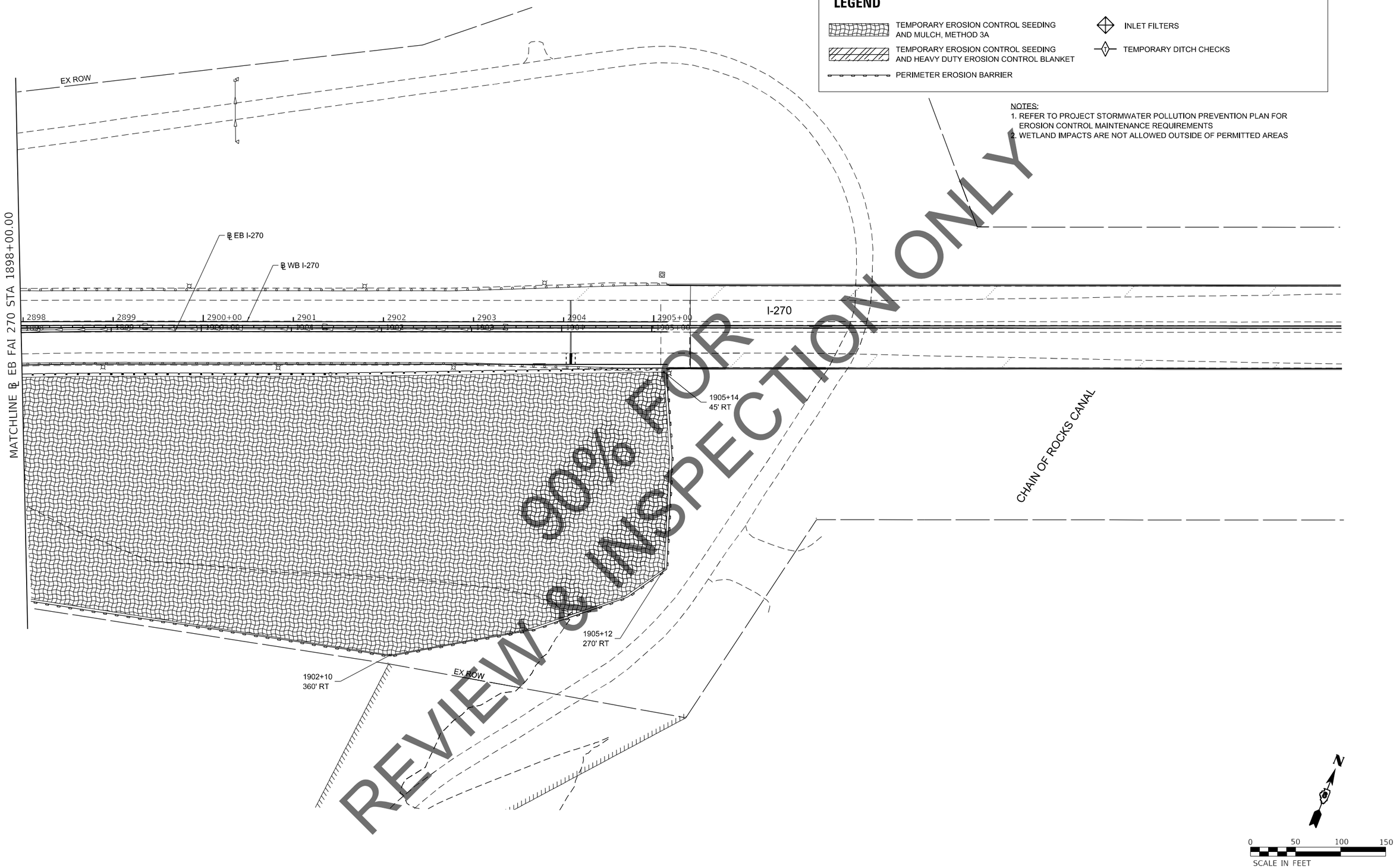

MODEL: Default
FILE NAME: I:\2020\1713903\4 - Eng\04.01 - CADD\04.01.02- Sheet\0876J90-sht-eros.1B-004.dgn

AMERICAN SURVEYING & ENGINEERING, P.C. SURVEYORS•ENGINEERS GEODESISTS•MAPPING SCIENTISTS	USER NAME = colwellj	DESIGNED - JB	REVISED -	STATE OF ILLINOIS DEPARTMENT OF TRANSPORTATION	FAI–270 EROSION CONTROL – STAGE 1B	F.A.I. RTE.	SECTION	COUNTY	TOTAL SHEETS / SHEET NO.
		DRAWN - JB	REVISED -			270	60(B)-1	MADISON	860 / 137
	PLOT SCALE = 50.0000 ' / in.	CHECKED - JC	REVISED -					CONTRACT NO. 76J90	
	PLOT DATE = 11/18/2021	DATE - 11/18/2021	REVISED -		SCALE: 1" = 50' SHEET 4 OF 4 SHEETS STA. 1898+00.00 TO STA. 1913+00.00		ILLINOIS	FED. AID PROJECT	

NOTES:
1. REFER TO PROJECT STORMWATER POLLUTION PREVENTION PLAN FOR EROSION CONTROL MAINTENANCE REQUIREMENTS
2. WETLAND IMPACTS ARE NOT ALLOWED OUTSIDE OF PERMITTED AREAS

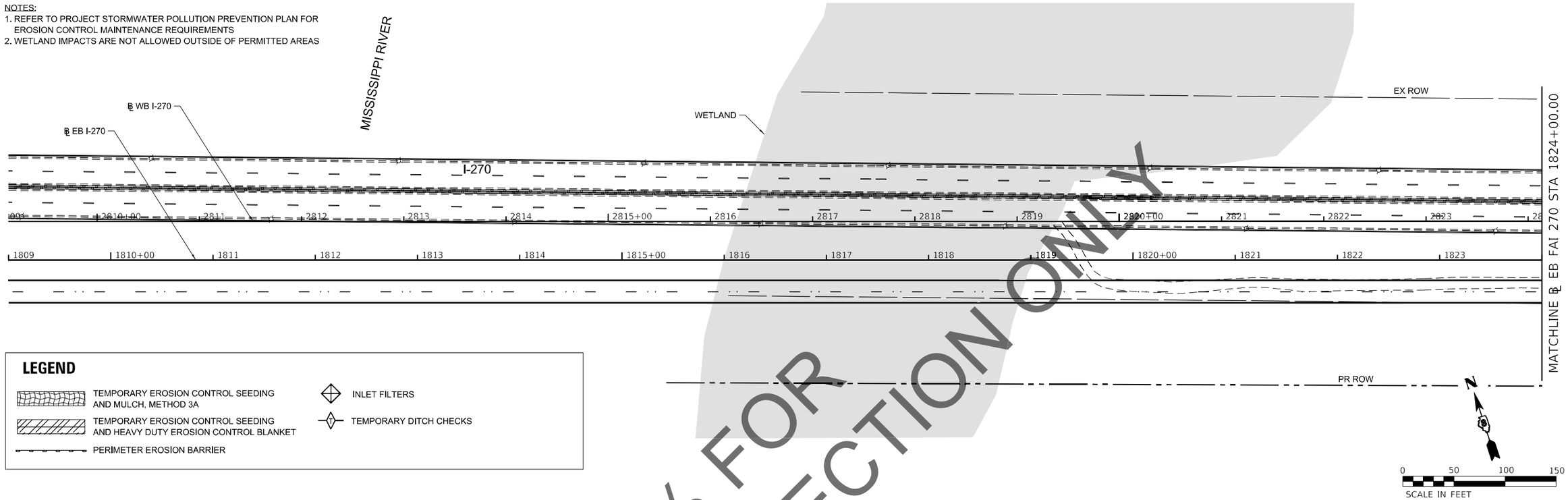

LEGEND

- TEMPORARY EROSION CONTROL SEEDING AND MULCH, METHOD 3A
- TEMPORARY EROSION CONTROL SEEDING AND HEAVY DUTY EROSION CONTROL BLANKET
- PERIMETER EROSION BARRIER
- INLET FILTERS
- TEMPORARY DITCH CHECKS

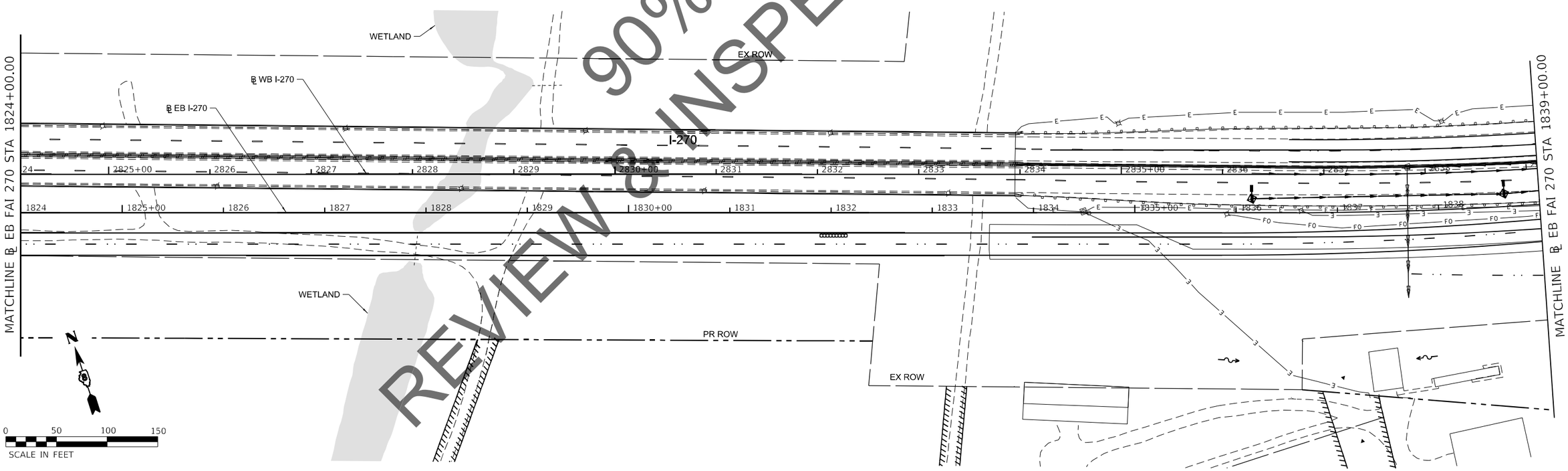

MODEL: Default
FILE NAME: I:\2020\117139\04 - Eng\04.01 - CADD\04.01.02- Sheet\D876J90-plt-cross1D-001.dgn

AMERICAN SURVEYING & ENGINEERING, P.C. SURVEYORS•ENGINEERS GEODESISTS•MAPPING SCIENTISTS

USER NAME = colwellj	DESIGNED - JM	REVISED -	
	DRAWN - JM	REVISED -	
PLOT SCALE = 50.0000 ' / in.	CHECKED - JC	REVISED -	
PLOT DATE = 11/18/2021	DATE - 11/18/21	REVISED -	

STATE OF ILLINOIS
DEPARTMENT OF TRANSPORTATION

FAI–270
EROSION CONTROL – STAGE 1D

SCALE: 1" = 50' | SHEET 1 OF 3 SHEETS | STA. 1809+00.00 TO STA. 1839+00.00

F.A.I. RTE.	SECTION	COUNTY	TOTAL SHEETS	SHEET NO.
270	60(B)-1	MADISON	860	138
		CONTRACT NO. 76J90		
	ILLINOIS	FED. AID PROJECT		

MODEL: Default
FILE NAME: h:\2020\117139\04 - Eng\04.01 - CADD\04.01.02- Sheet\0876J90-int-cross1D-002.dgn

AMERICAN SURVEYING & ENGINEERING, P.C. SURVEYORS•ENGINEERS GEODESISTS•MAPPING SCIENTISTS	USER NAME = colwellj	DESIGNED - JM	REVISED -	STATE OF ILLINOIS DEPARTMENT OF TRANSPORTATION
		DRAWN - JM	REVISED -	
	PLOT SCALE = 50.0000 ' / in.	CHECKED - JC	REVISED -	
	PLOT DATE = 11/18/2021	DATE - 11/18/21	REVISED -	

FAI–270
EROSION CONTROL – STAGE 1D

SCALE: 1" = 50' | SHEET 2 OF 3 SHEETS | STA. 1839+00.00 TO STA. 1868+00.00

F.A.I. RTE.	SECTION	COUNTY	TOTAL SHEETS	SHEET NO.
270	60(B)-1	MADISON	860	139

CONTRACT NO. 76J90

ILLINOIS | FED. AID PROJECT

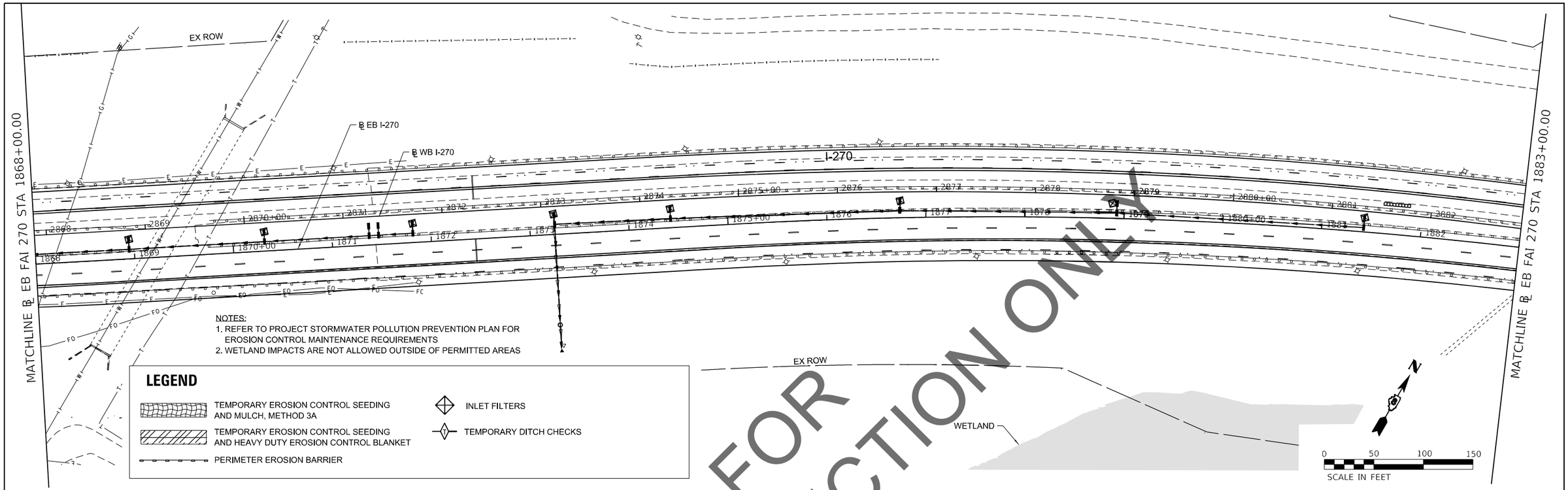

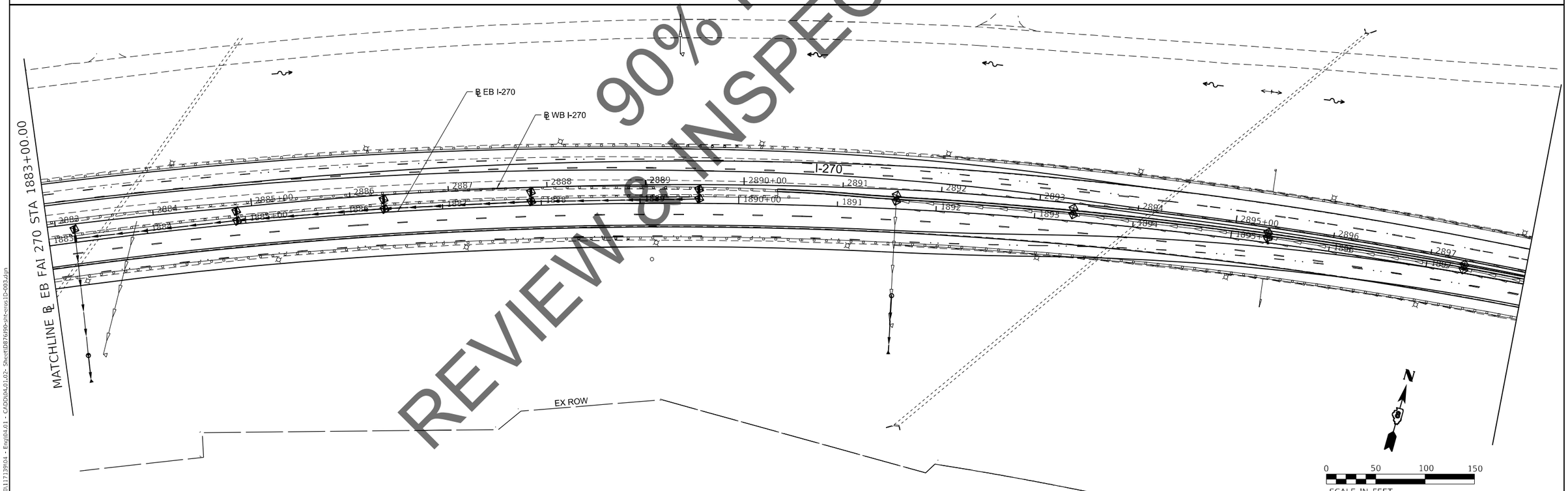

MODEL: Default
FILE NAME: I:\2020\1173904 - Engl04.01 - CADD\04.01.02- Sheet\0876J90-sht-eros1D-003.dgn

AMERICAN SURVEYING & ENGINEERING, P.C. SURVEYORS•ENGINEERS GEODESISTS•MAPPING SCIENTISTS

USER NAME = colwellj	DESIGNED - JM	REVISED -	
	DRAWN - JM	REVISED -	
PLOT SCALE = 50.0000 ' / in.	CHECKED - JC	REVISED -	
PLOT DATE = 11/18/2021	DATE - 11/18/21	REVISED -	

STATE OF ILLINOIS
DEPARTMENT OF TRANSPORTATION

FAI–270
EROSION CONTROL – STAGE 1D

SCALE: 1" = 50' | SHEET 3 OF 3 SHEETS | STA. 1868+00.00 TO STA. 1898+00.00

F.A.I. RTE.	SECTION	COUNTY	TOTAL SHEETS	SHEET NO.
270	60(B)-1	MADISON	860	140
		CONTRACT NO. 76J90		
		ILLINOIS	FED. AID PROJECT	

LEGEND

- TEMPORARY EROSION CONTROL SEEDING AND MULCH, METHOD 3A
- TEMPORARY EROSION CONTROL SEEDING AND HEAVY DUTY EROSION CONTROL BLANKET
- PERIMETER EROSION BARRIER
- INLET FILTERS
- TEMPORARY DITCH CHECKS

NOTES:
1. REFER TO PROJECT STORMWATER POLLUTION PREVENTION PLAN FOR EROSION CONTROL MAINTENANCE REQUIREMENTS
2. WETLAND IMPACTS ARE NOT ALLOWED OUTSIDE OF PERMITTED AREAS

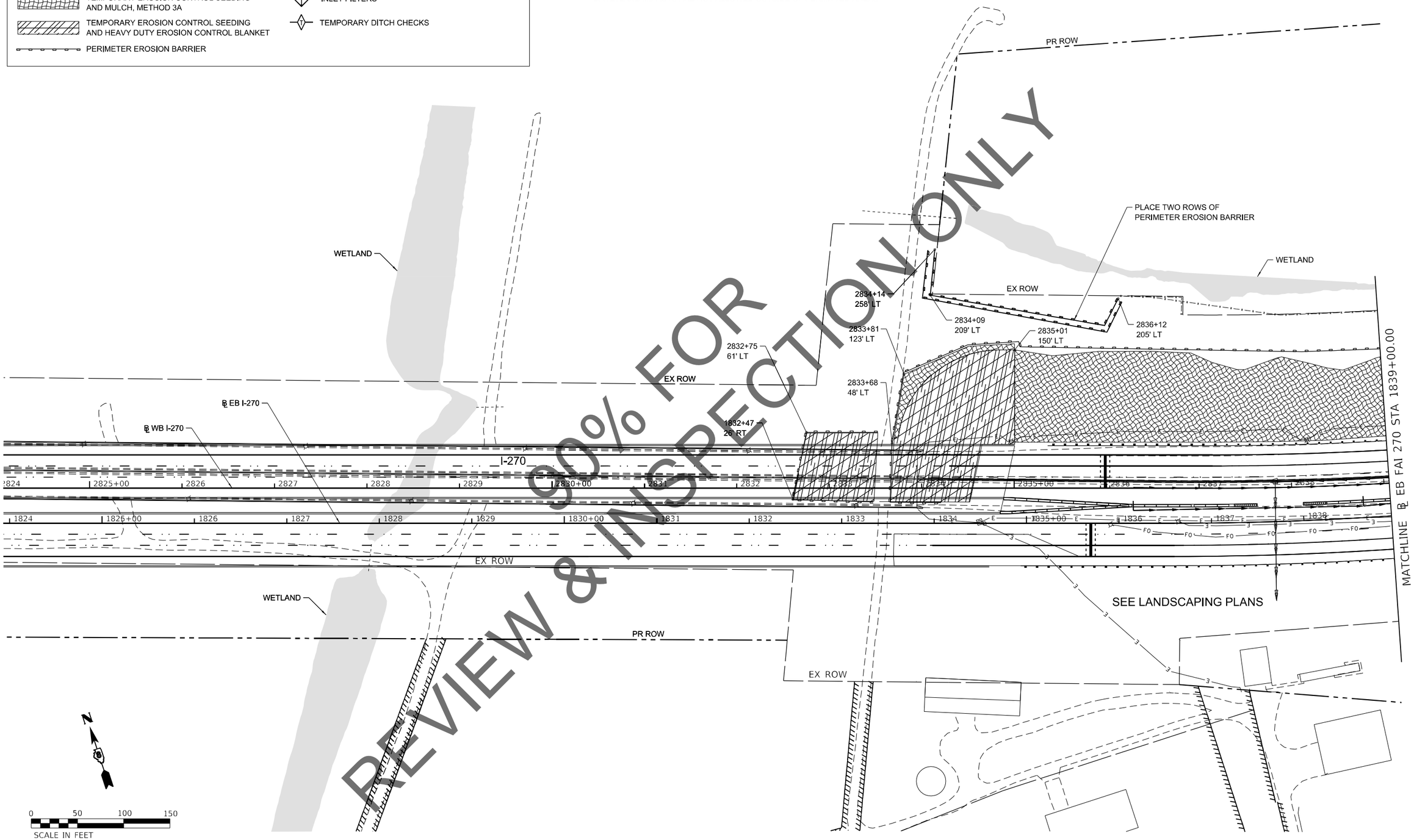

MODEL: Default
FILE NAME: h:\2020\11739\04 - Eng\04.01 - CADD\04.01.02- Sheet\D876\90-site-eros2A-001.dgn

AMERICAN SURVEYING & ENGINEERING, P.C. SURVEYORS•ENGINEERS GEODESISTS•MAPPING SCIENTISTS	USER NAME = colwellj	DESIGNED - JM	REVISED -	STATE OF ILLINOIS DEPARTMENT OF TRANSPORTATION	FAI–270 EROSION CONTROL – STAGE 2A	F.A.I. RTE.	SECTION	COUNTY	TOTAL SHEETS / SHEET NO.
		DRAWN - JM	REVISED -			270	60(B)-1	MADISON	860 / 141
	PLOT SCALE = 50.0000 ' / in.	CHECKED - JC	REVISED -					CONTRACT NO. 76J90	
	PLOT DATE = 11/18/2021	DATE - 11/18/21	REVISED -		SCALE: 1" = 50' SHEET 1 OF 5 SHEETS STA. 1824+00.00 TO STA. 1839+00.00			ILLINOIS FED. AID PROJECT	

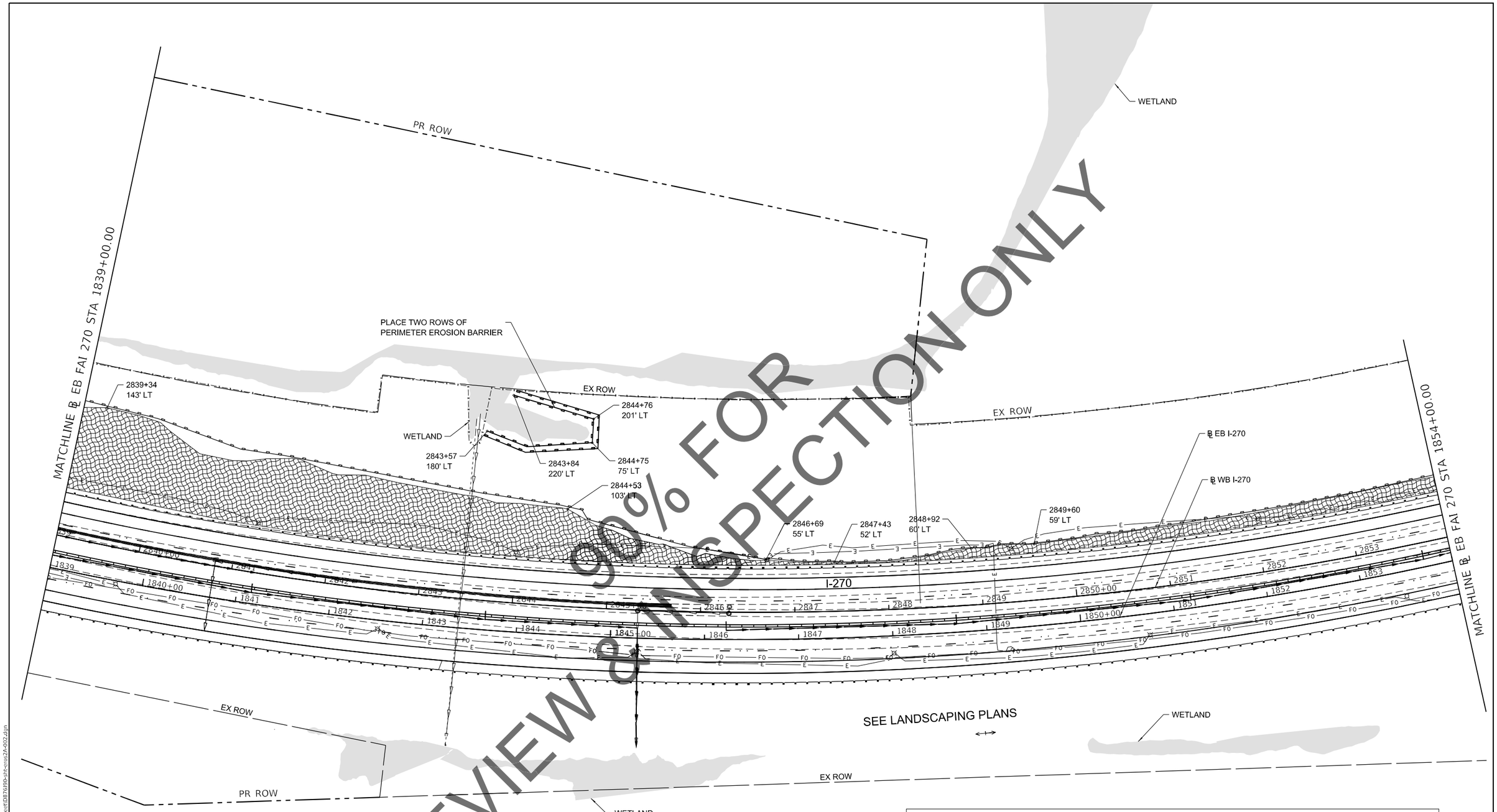

NOTES:
1. REFER TO PROJECT STORMWATER POLLUTION PREVENTION PLAN FOR EROSION CONTROL MAINTENANCE REQUIREMENTS
2. WETLAND IMPACTS ARE NOT ALLOWED OUTSIDE OF PERMITTED AREAS

LEGEND

- TEMPORARY EROSION CONTROL SEEDING AND MULCH, METHOD 3A
- TEMPORARY EROSION CONTROL SEEDING AND HEAVY DUTY EROSION CONTROL BLANKET
- PERIMETER EROSION BARRIER
- INLET FILTERS
- TEMPORARY DITCH CHECKS

MODEL: Default
FILE NAME: I:\2020\1171390\4 - Eng\04.01 - CADD\04.01.02- Sheet\D876199-sht-eros2A-002.dgn

AMERICAN SURVEYING & ENGINEERING, P.C.
SURVEYORS•ENGINEERS
GEODESISTS•MAPPING SCIENTISTS

USER NAME = colwellj	DESIGNED - JM	REVISED -	
	DRAWN - JM	REVISED -	
PLOT SCALE = 50.0000 ' / in.	CHECKED - JC	REVISED -	
PLOT DATE = 11/18/2021	DATE - 11/18/21	REVISED -	

STATE OF ILLINOIS
DEPARTMENT OF TRANSPORTATION

FAI–270
EROSION CONTROL – STAGE 2A

SCALE: 1" = 50' | SHEET 2 OF 5 SHEETS | STA. 1839+00.00 TO STA. 1854+00.00

F.A.I. RTE.	SECTION	COUNTY	TOTAL SHEETS	SHEET NO.
270	60(B)-1	MADISON	860	142
		CONTRACT NO. 76J90		
		ILLINOIS FED. AID PROJECT		

LEGEND

- TEMPORARY EROSION CONTROL SEEDING AND MULCH, METHOD 3A
- TEMPORARY EROSION CONTROL SEEDING AND HEAVY DUTY EROSION CONTROL BLANKET
- PERIMETER EROSION BARRIER
- INLET FILTERS
- TEMPORARY DITCH CHECKS

NOTES:
1. REFER TO PROJECT STORMWATER POLLUTION PREVENTION PLAN FOR EROSION CONTROL MAINTENANCE REQUIREMENTS
2. WETLAND IMPACTS ARE NOT ALLOWED OUTSIDE OF PERMITTED AREAS

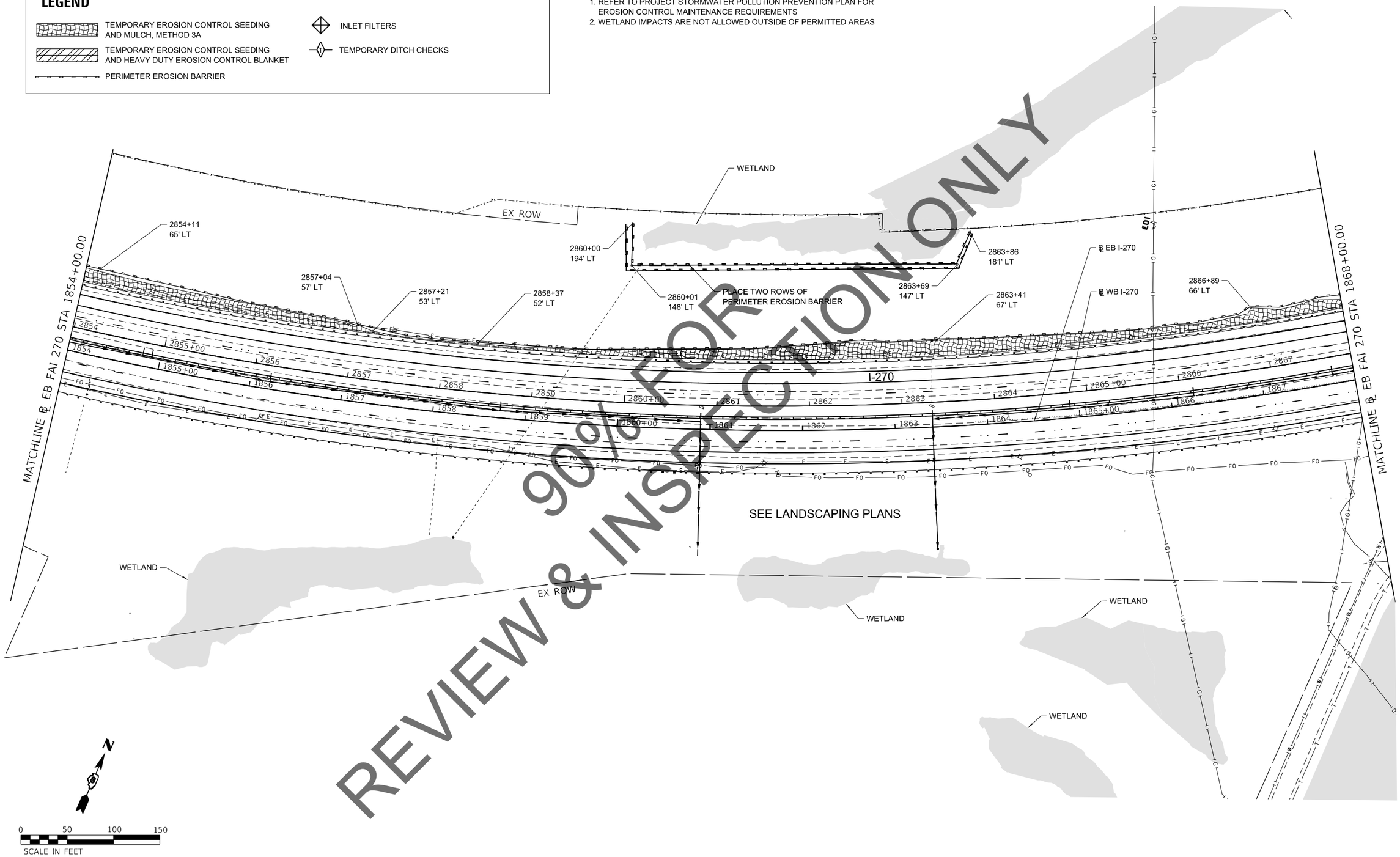

MODEL: Default
FILE NAME: h:\2020\117139\04 - Eng\04.01 - CADD\04.01.02- Sheet\D876\9b-sht-erosz2A-003.dgn

AMERICAN SURVEYING & ENGINEERING, P.C. SURVEYORS•ENGINEERS GEODESISTS•MAPPING SCIENTISTS

USER NAME = colwellj	DESIGNED - JM	REVISED -	
	DRAWN - JM	REVISED -	
PLOT SCALE = 50.0000 ' / in.	CHECKED - JC	REVISED -	
PLOT DATE = 11/18/2021	DATE - 11/18/21	REVISED -	

STATE OF ILLINOIS
DEPARTMENT OF TRANSPORTATION

FAI–270
EROSION CONTROL – STAGE 2A

SCALE: 1" = 50' | SHEET 3 OF 5 SHEETS | STA. 1854+00.00 TO STA. 1868+00.00

F.A.I. RTE.	SECTION	COUNTY	TOTAL SHEETS	SHEET NO.
270	60(B)-1	MADISON	860	143

CONTRACT NO. 76J90

ILLINOIS | FED. AID PROJECT

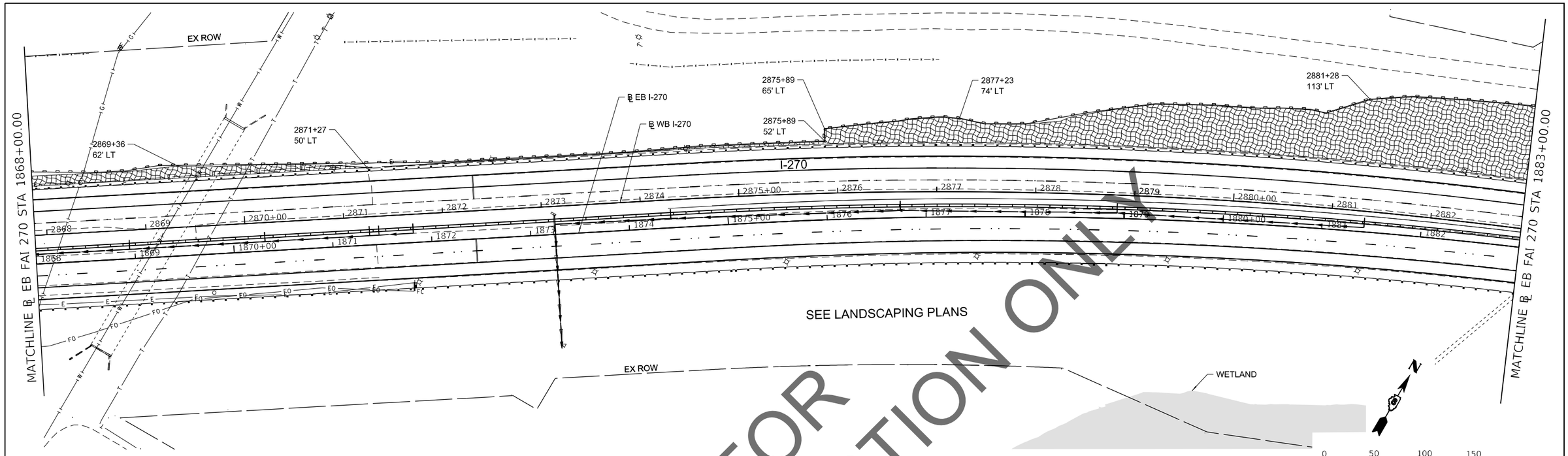

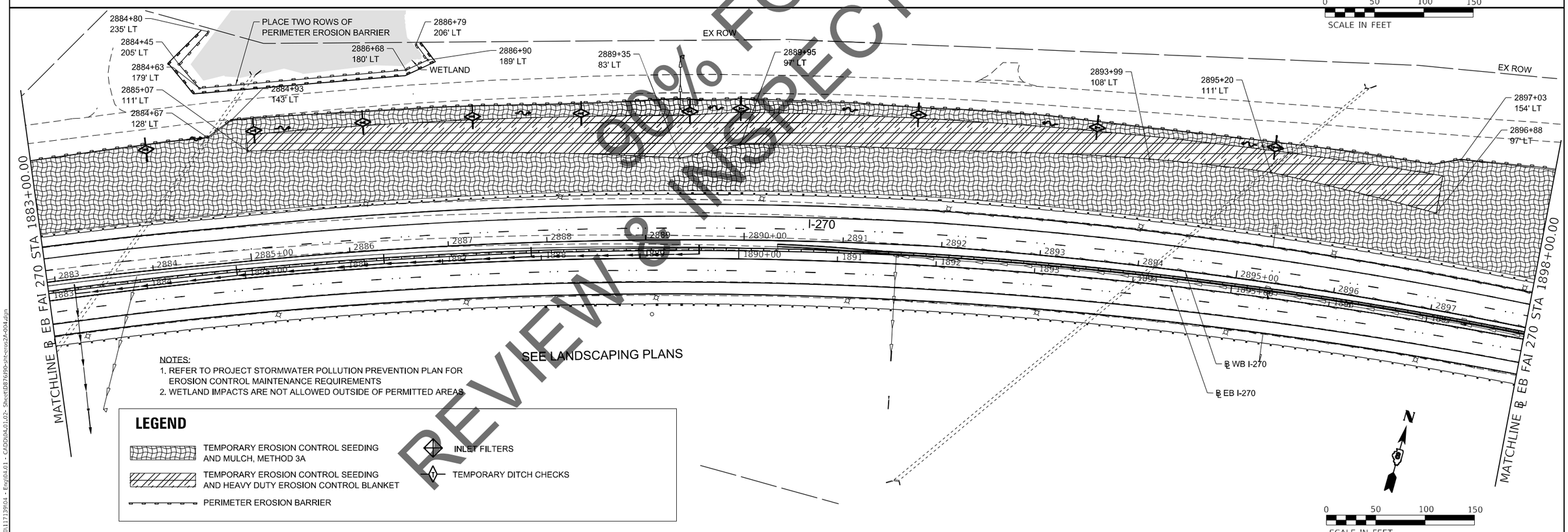

NOTES:
1. REFER TO PROJECT STORMWATER POLLUTION PREVENTION PLAN FOR EROSION CONTROL MAINTENANCE REQUIREMENTS
2. WETLAND IMPACTS ARE NOT ALLOWED OUTSIDE OF PERMITTED AREAS

LEGEND

- TEMPORARY EROSION CONTROL SEEDING AND MULCH, METHOD 3A
- TEMPORARY EROSION CONTROL SEEDING AND HEAVY DUTY EROSION CONTROL BLANKET
- PERIMETER EROSION BARRIER
- INLET FILTERS
- TEMPORARY DITCH CHECKS

MODEL: Default
FILE NAME: I:\2020\1171390\4 - Eng\04-01 - CADD\04.01-02- Sheet\D876J90-sht-erosion2A-004.dgn

AMERICAN
SURVEYING & ENGINEERING, P.C.
SURVEYORS•ENGINEERS
GEODESISTS•MAPPING SCIENTISTS

USER NAME = colwellj	DESIGNED - JM	REVISED -
	DRAWN - JM	REVISED -
PLOT SCALE = 50.0000 ' / in.	CHECKED - JC	REVISED -
PLOT DATE = 11/18/2021	DATE - 11/18/21	REVISED -

STATE OF ILLINOIS
DEPARTMENT OF TRANSPORTATION

FAI–270
EROSION CONTROL – STAGE 2A

SCALE: 1" = 50' | SHEET 4 OF 5 SHEETS | STA. 1868+00.00 TO STA. 1898+00.00

F.A.I. RTE.	SECTION	COUNTY	TOTAL SHEETS	SHEET NO.
270	60(B)-1	MADISON	860	144
		CONTRACT NO. 76J90		
	ILLINOIS	FED. AID PROJECT		

NOTES:
1. REFER TO PROJECT STORMWATER POLLUTION PREVENTION PLAN FOR EROSION CONTROL MAINTENANCE REQUIREMENTS
2. WETLAND IMPACTS ARE NOT ALLOWED OUTSIDE OF PERMITTED AREAS

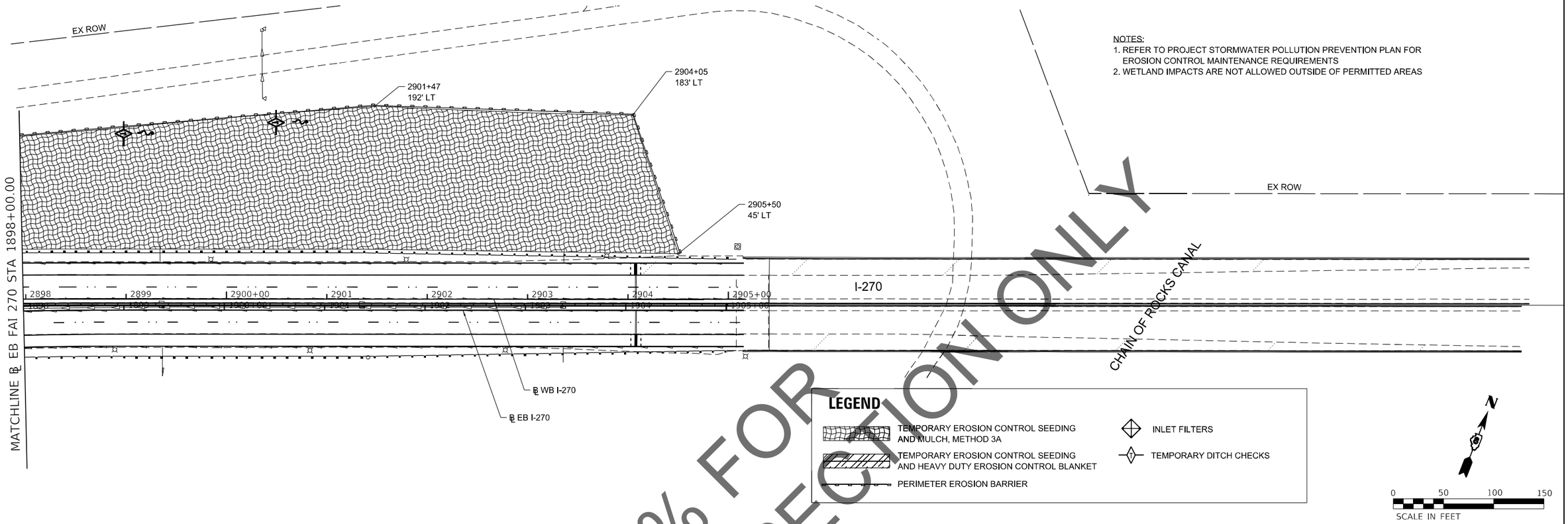

MODEL: Default
FILE NAME: I:\2020\1171390\4 - Eng\04.01 - CADD\04.01.02- Sheet\D876J90-sht-eros2A-005.dgn

AMERICAN SURVEYING & ENGINEERING, P.C. SURVEYORS•ENGINEERS GEODESISTS•MAPPING SCIENTISTS	USER NAME = colwellj	DESIGNED - JM	REVISED -	STATE OF ILLINOIS DEPARTMENT OF TRANSPORTATION	FAI–270 EROSION CONTROL – STAGE 2A	F.A.I. RTE.	SECTION	COUNTY	TOTAL SHEETS	SHEET NO.
		DRAWN - JM	REVISED -			270	60(B)-1	MADISON	860	145
	PLOT SCALE = 50.0000 ' / in.	CHECKED - JC	REVISED -					CONTRACT NO. 76J90		
	PLOT DATE = 11/18/2021	DATE - 11/18/21	REVISED -		SCALE: 1" = 50' SHEET 5 OF 5 SHEETS STA. 1898+00.00 TO STA. 1913+00.00		ILLINOIS	FED. AID PROJECT		

STRUCTURE SCHEDULE								
STR. NO.	EB STATION	OFFSET		TYPE	F&G	WB RIM EL.	EB RIM EL.	INV.
203	1843+65.73	11.1	LT	DRAIN STRUCTURES TY 4 WITH 2	TY 20	446.97	447.45	442.45
204	1841+15.34	11.8	LT	DRAIN STRUCTURES TY 4 WITH 2	TY 20	448.22	448.70	443.70
205	1838+65.45	12.6	LT	DRAIN STRUCTURES TY 4 WITH 2	TY 20	449.47	449.95	445.45
206	1836+15.53	13.8	LT	DRAIN STRUCTURES TY 4 WITH 2	TY 20	451.03	451.20	446.95
100	1843+35.24	124.4	RT	END SECTION (3'x3' BOX)				408.92
800	1837+20.28	223.6	RT	18" FES			411.82	410.32
801	1837+04.49	165.5	RT	18" FES			412.00	410.50

PIPE SCHEDULE									
PIPE NO.	FROM STRUCTURE	U/S INV.	TO STRUCTURE	D/S INV.	CLASS/TYPE	SIZE (IN.)	LENGTH (L.F.)	SLOPE (%)	TRENCH BACKFILL (C.Y.)
P203	203	442.45	202	440.90	CLASS A, TYPE 2	24	162	0.10	90.2
P204	204	443.70	203	442.45	CLASS A, TYPE 2	24	250	0.50	129.4
P205	205	445.45	204	443.70	CLASS A, TYPE 2	18	250	0.70	131.8
P206	206	446.95	205	445.45	CLASS A, TYPE 2	15	250	0.60	131.5
P801	801	410.50	800	410.32	CLASS A, TYPE 1	18	61	0.30	32.2

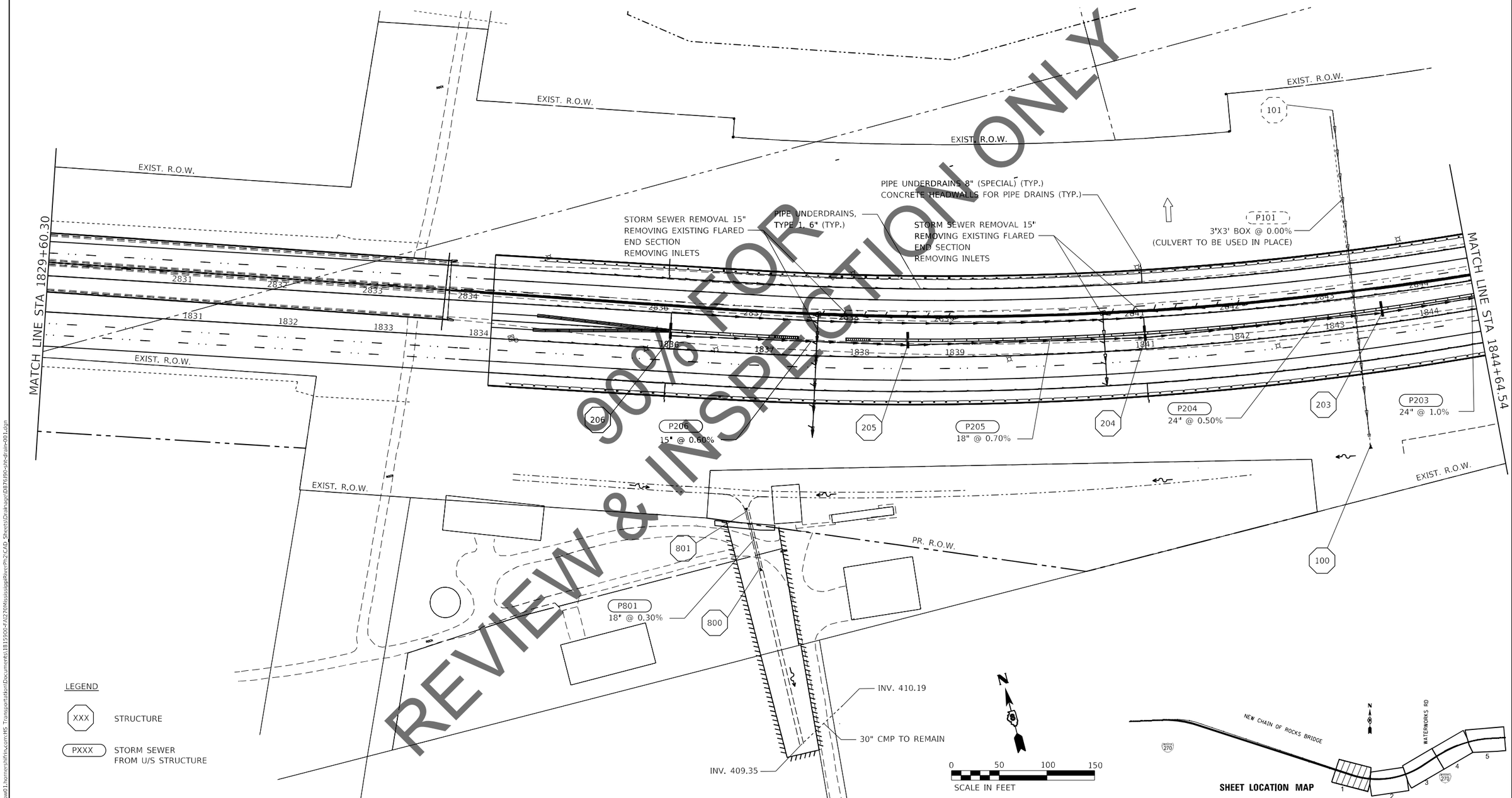

MODEL: Default
FILE NAME: pw:\\pw01.hamesshffnx.com:HS Transportation\Documents\1815900-FA1270MississippiRiverPh2\CAD Sheets\Drainage\D876190-sht-drain-001.dgn

MILLENNIA PROFESSIONAL SERVICES
www.millennia.pro

USER NAME = dbuescher	DESIGNED - ERO	REVISED -	
	DRAWN - DDB	REVISED -	
PLOT SCALE = 50.0000 ' / in.	CHECKED - MJR	REVISED -	
PLOT DATE = 11/15/2021	DATE - 2021.11.15	REVISED -	

STATE OF ILLINOIS
DEPARTMENT OF TRANSPORTATION

PROPOSED DRAINAGE PLAN
I-270 OVER MISSISSIPPI

SCALE: 1" = 50' | SHEET OF SHEETS | STA. 829+50 TO STA. 844+50

F.A. RTE.	SECTION	COUNTY	TOTAL SHEETS	SHEET NO.
270	60B1	MADISON	860	146
		CONTRACT NO.		
	ILLINOIS	FED. AID PROJECT		

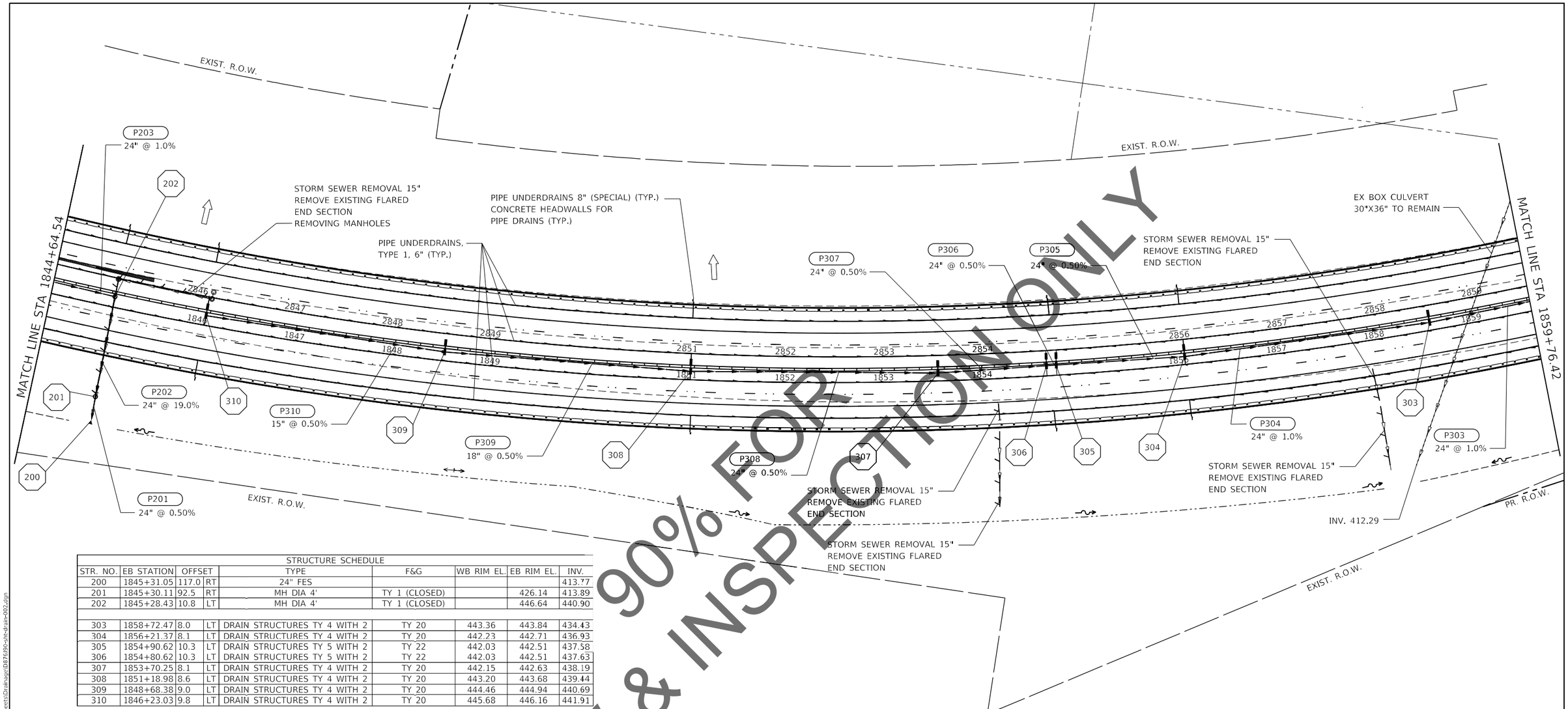

STRUCTURE SCHEDULE								
STR. NO.	EB STATION	OFFSET		TYPE	F&G	WB RIM EL.	EB RIM EL.	INV.
200	1845+31.05	117.0	RT	24" FES				413.77
201	1845+30.11	92.5	RT	MH DIA 4'	TY 1 (CLOSED)		426.14	413.89
202	1845+28.43	10.8	LT	MH DIA 4'	TY 1 (CLOSED)		446.64	440.90
303	1858+72.47	8.0	LT	DRAIN STRUCTURES TY 4 WITH 2	TY 20	443.36	443.84	434.43
304	1856+21.37	8.1	LT	DRAIN STRUCTURES TY 4 WITH 2	TY 20	442.23	442.71	436.93
305	1854+90.62	10.3	LT	DRAIN STRUCTURES TY 5 WITH 2	TY 22	442.03	442.51	437.58
306	1854+80.62	10.3	LT	DRAIN STRUCTURES TY 5 WITH 2	TY 22	442.03	442.51	437.63
307	1853+70.25	8.1	LT	DRAIN STRUCTURES TY 4 WITH 2	TY 20	442.15	442.63	438.19
308	1851+18.98	8.6	LT	DRAIN STRUCTURES TY 4 WITH 2	TY 20	443.20	443.68	439.44
309	1848+68.38	9.0	LT	DRAIN STRUCTURES TY 4 WITH 2	TY 20	444.46	444.94	440.69
310	1846+23.03	9.8	LT	DRAIN STRUCTURES TY 4 WITH 2	TY 20	445.68	446.16	441.91

PIPE SCHEDULE									
PIPE NO.	FROM STRUCTURE	U/S INV.	TO STRUCTURE	D/S INV.	CLASS/TYPE	SIZE (IN.)	LENGTH (L.F.)	SLOPE (%)	TRENCH BACKFILL (C.Y.)
P201	201	413.89	200	413.77	CLASS A, TYPE 2	24	25	0.50	14.4
P202	202	440.90	201	421.14	CLASS A, TYPE 2	24	104	19.00	57.9
P203	203	442.45	202	440.90	CLASS A, TYPE 2	24	162	0.10	90.2
P303	303	434.43	302	432.26	CLASS A, TYPE 2	24	217	1.00	120.8
P304	304	436.93	303	434.43	CLASS A, TYPE 2	24	250	1.00	129.4
P305	305	437.58	304	436.93	CLASS A, TYPE 2	24	131	0.50	67.8
P306	306	437.63	305	437.58	CLASS A, TYPE 2	24	10	0.50	5.2
P307	307	438.19	306	437.63	CLASS A, TYPE 2	24	111	0.50	57.5
P308	308	439.44	307	438.19	CLASS A, TYPE 2	24	250	0.50	129.4
P309	309	440.69	308	439.44	CLASS A, TYPE 2	18	250	0.50	131.8
P310	310	441.91	309	440.69	CLASS A, TYPE 2	15	250	0.50	131.5

LEGEND

XXX — STRUCTURE

PXXX — STORM SEWER FROM U/S STRUCTURE

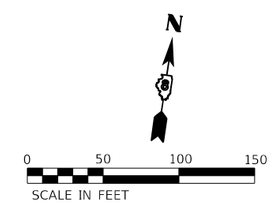

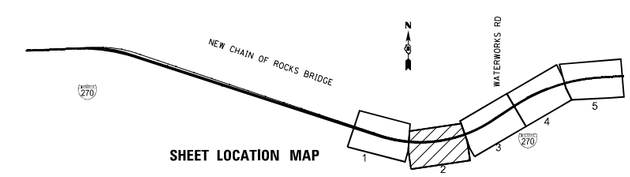

SHEET LOCATION MAP

MODEL: Default
FILE NAME: pw:\\pw01.hurmershifrinx.com:HS Transportation\Documents\1815900-FA270MississippiRiverPh2\CAD Sheets\Drainage\0876190-sht-drain-002.dgn

MILLENNIA PROFESSIONAL SERVICES
www.millennia.pro

USER NAME = dbuescher	DESIGNED - ERO	REVISED -	
	DRAWN - DDB	REVISED -	
PLOT SCALE = 50.0000 ' / in.	CHECKED - MJR	REVISED -	
PLOT DATE = 11/18/2021	DATE - 2021.11.15	REVISED -	

STATE OF ILLINOIS
DEPARTMENT OF TRANSPORTATION

PROPOSED DRAINAGE PLAN
I-270 OVER MISSISSIPPI

SCALE: 1" = 50' | SHEET OF SHEETS | STA. 844+50 TO STA. 859+50

F.A. RTE.	SECTION	COUNTY	TOTAL SHEETS	SHEET NO.
270	60B1	MADISON	860	147
		CONTRACT NO.		
		ILLINOIS FED. AID PROJECT		

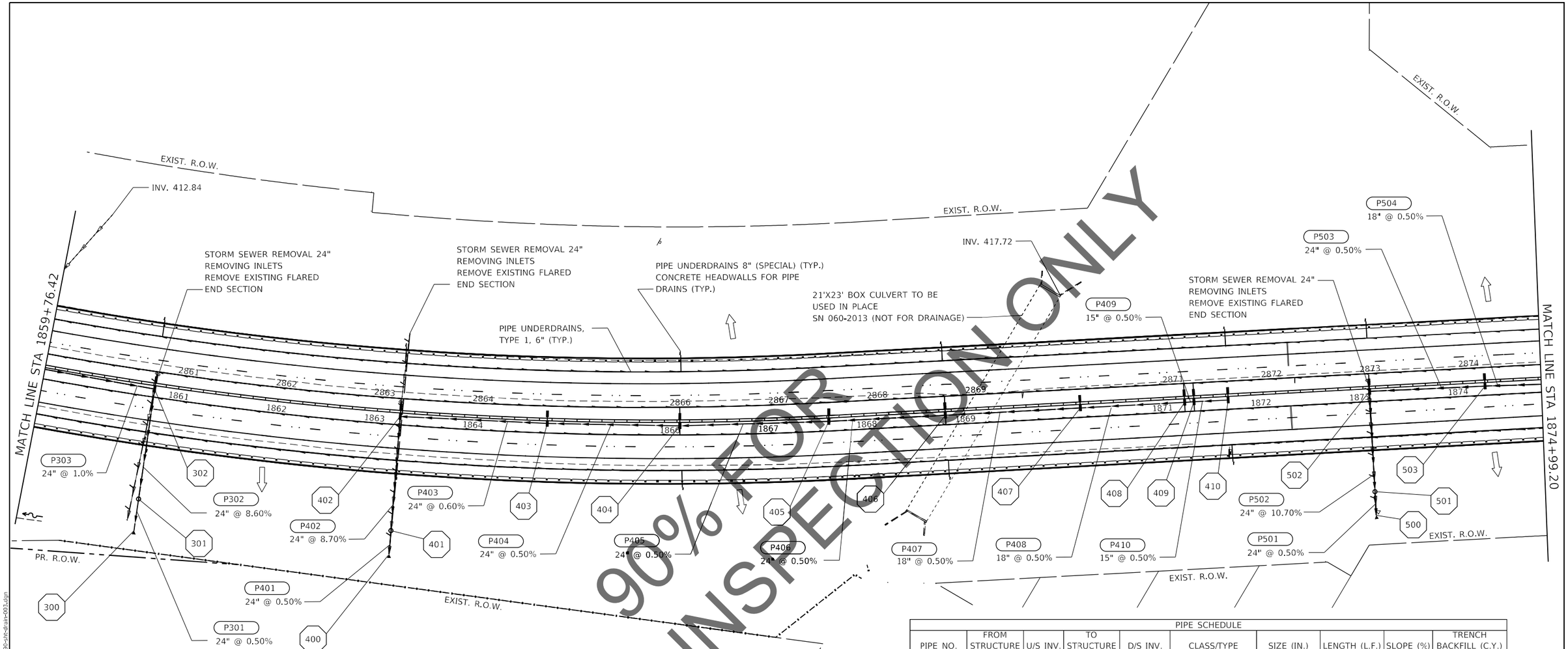

STRUCTURE SCHEDULE							
STR. NO.	EB STATION	OFFSET		TYPE	F&G	WB RIM EL.	EB RIM EL.	INV.
300	1860+90.21	136.8	RT	24" FES				416.76
301	1860+90.08	104.4	RT	MH DIA 4'	TY 1 (CLOSED)		427.57	416.93
302	1860+89.74	8.2	LT	DRAIN STRUCTURES TY 4 WITH 2	TY 20	444.42	444.90	432.06
400	1863+40.17	131.6	RT	24" FES			420.02	418.02
401	1863+40.28	107.6	RT	MH DIA 4'	TY 1 (CLOSED)		426.86	418.14
402	1863+40.81	8.6	LT	DRAIN STRUCTURES TY 4 WITH 2	TY 20	444.77	445.25	431.11
403	1865+00.38	5.5	LT	DRAIN STRUCTURES TY 4 WITH 2	TY 20	444.39	444.69	434.56
404	1866+24.85	9.2	LT	DRAIN STRUCTURES TY 4 WITH 2	TY 20	443.74	444.22	435.03
405	1867+76.44	9.8	LT	DRAIN STRUCTURES TY 4 WITH 2	TY 20	443.14	443.46	435.79
406	1868+94.79	9.6	LT	DRAIN STRUCTURES TY 4 WITH 2	TY 20	442.83	442.87	436.38
407	1870+31.76	9.5	LT	DRAIN STRUCTURES TY 4 WITH 2	TY 20	442.57	442.18	437.07
408	1871+37.60	9.5	LT	DRAIN STRUCTURES TY 5 WITH 2	TY 22	442.32	442.07	437.60
409	1871+47.10	9.5	LT	DRAIN STRUCTURES TY 5 WITH 2	TY 22	442.30	442.07	437.65
410	1871+81.79	9.4	LT	DRAIN STRUCTURES TY 4 WITH 2	TY 20	442.22	442.08	437.83
500	1873+25.14	115.5	RT	24" FES				420.00
501	1873+25.16	91.5	RT	MH DIA 4'	TY 1 (CLOSED)		427.59	420.12
502	1873+25.25	10.2	LT	DRAIN STRUCTURES TY 4 WITH 2	TY 20	442.28	442.22	433.95
503	1874+42.38	9.2	LT	DRAIN STRUCTURES TY 4 WITH 2	TY 20	442.67	442.59	437.04

PIPE SCHEDULE									
PIPE NO.	FROM STRUCTURE	U/S INV.	TO STRUCTURE	D/S INV.	CLASS/TYPE	SIZE (IN.)	LENGTH (L.F.)	SLOPE (%)	TRENCH BACKFILL (C.Y.)
P301	301	416.93	300	416.76	CLASS A, TYPE 2	24	33	0.50	19.0
P302	302	432.26	301	422.54	CLASS A, TYPE 2	24	113	8.60	65.2
P401	401	418.14	400	418.02	CLASS A, TYPE 2	24	24	0.50	13.8
P402	402	431.11	401	421.02	CLASS A, TYPE 2	24	116	8.70	66.9
P403	403	434.56	402	431.11	CLASS A, TYPE 2	24	149	0.50	82.9
P404	404	435.03	403	434.56	CLASS A, TYPE 2	24	134	0.50	69.4
P405	405	435.79	404	435.03	CLASS A, TYPE 2	24	151	0.50	78.2
P406	406	436.38	405	435.79	CLASS A, TYPE 2	24	118	0.50	61.1
P407	407	437.07	406	436.38	CLASS A, TYPE 2	18	137	0.50	72.2
P408	408	437.60	407	437.07	CLASS A, TYPE 2	18	106	0.50	55.9
P409	409	437.65	408	437.60	CLASS A, TYPE 2	15	10	0.50	5.3
P410	410	437.83	409	437.65	CLASS A, TYPE 2	15	35	0.50	18.4
P501	501	420.12	500	420.00	CLASS A, TYPE 2	24	24	0.50	13.8
P502	502	433.95	501	423.00	CLASS A, TYPE 2	24	102	10.70	58.9
P503	503	437.04	502	436.45	CLASS A, TYPE 2	24	117	0.50	65.1

LEGEND

XXX — STRUCTURE

PXXX — STORM SEWER FROM U/S STRUCTURE

0 50 100 150
SCALE IN FEET

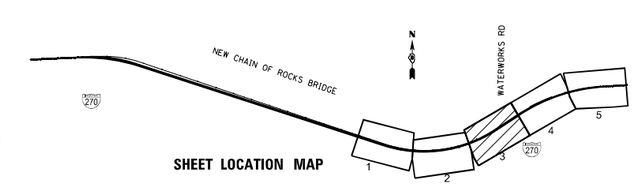

SHEET LOCATION MAP

MODEL: Default
FILE NAME: pw:\\pw01.hormershifrin.com:HS_Transportation\Documents\1815900-FA1270MississippiRiver\Ph2\CAD Sheets\Drainage\D876190-sht-drain-003.dgn

MILLENNIA PROFESSIONAL SERVICES
www.millennia.pro

USER NAME = dbuescher	DESIGNED - ERO	REVISED -
	DRAWN - DDB	REVISED -
PLOT SCALE = 50.0000 ' / in.	CHECKED - MJR	REVISED -
PLOT DATE = 11/18/2021	DATE - 2021.11.15	REVISED -

STATE OF ILLINOIS
DEPARTMENT OF TRANSPORTATION

PROPOSED DRAINAGE PLAN
I-270 OVER MISSISSIPPI

SCALE: 1" = 50' | SHEET OF SHEETS | STA. 859+50 TO STA. 875+50

F.A. RTE.	SECTION	COUNTY	TOTAL SHEETS	SHEET NO.
270	60B1	MADISON	860	148
		CONTRACT NO.		
		ILLINOIS	FED. AID PROJECT	

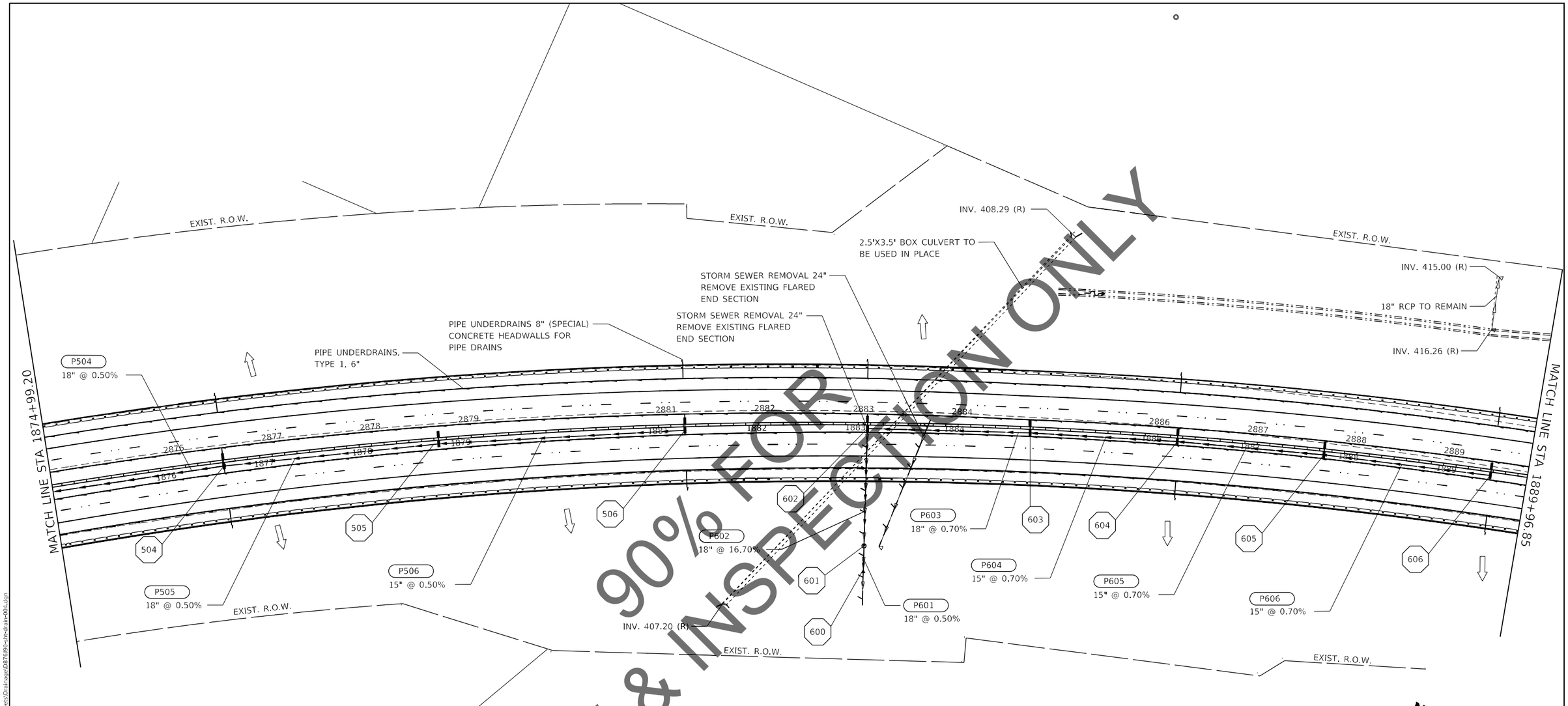

STRUCTURE SCHEDULE								
STR. NO.	EB STATION	OFFSET		TYPE	F&G	WB RIM EL.	EB RIM EL.	INV.
504	1876+74.03	7.4	LT	DRAIN STRUCTURES TY 4 WITH 2	TY 20	443.93	443.32	438.20
505	1878+92.60	5.6	LT	DRAIN STRUCTURES TY 4 WITH 2	TY 20	444.13	443.99	439.29
506	1881+42.2	4.4	LT	DRAIN STRUCTURES TY 4 WITH 2	TY 20	444.90	444.79	440.54
600	1883+23.38	152.1	RT	18" FES				413.13
601	1883+23.92	128.3	RT	MH DIA 4'	TY 1 (CLOSED)		417.51	413.24
602	1883+26.83	3.8	LT	DRAIN STRUCTURES TY 4 WITH 2	TY 20	445.46	445.37	436.18
603	1884+91.68	3.6	LT	DRAIN STRUCTURES TY 4 WITH 2	TY 20	445.97	445.89	439.84
604	1886+40.95	3.6	LT	DRAIN STRUCTURES TY 4 WITH 2	TY 20	446.53	446.36	440.89
605	1887+89.91	3.9	LT	DRAIN STRUCTURES TY 4 WITH 2	TY 20	447.08	446.83	441.93
606	1889+59.77	4.4	LT	DRAIN STRUCTURES TY 4 WITH 2	TY 20	447.66	447.37	443.12

PIPE SCHEDULE									
PIPE NO.	FROM STRUCTURE	U/S INV.	TO STRUCTURE	D/S INV.	CLASS/TYPE	SIZE (IN.)	LENGTH (L.F.)	SLOPE (%)	TRENCH BACKFILL (C.Y.)
P504	504	438.20	503	437.04	CLASS A, TYPE 2	18	232	0.50	122.3
P505	505	439.29	504	438.20	CLASS A, TYPE 2	18	219	0.50	115.5
P506	506	440.54	505	439.29	CLASS A, TYPE 2	15	250	0.50	131.5
P601	601	413.24	600	413.12	CLASS A, TYPE 2	18	24	0.50	13.9
P602	602	436.18	601	416.62	CLASS A, TYPE 2	18	119	16.40	69.1
P603	603	439.84	602	438.68	CLASS A, TYPE 2	18	165	0.70	92.8
P604	604	440.89	603	439.84	CLASS A, TYPE 2	15	150	0.70	78.9
P605	605	441.93	604	440.89	CLASS A, TYPE 2	15	149	0.70	78.4
P606	606	443.12	605	441.93	CLASS A, TYPE 2	15	170	0.70	89.4

N

0 50 100 150

SCALE IN FEET

LEGEND

XXX STRUCTURE

PXXX STORM SEWER FROM U/S STRUCTURE

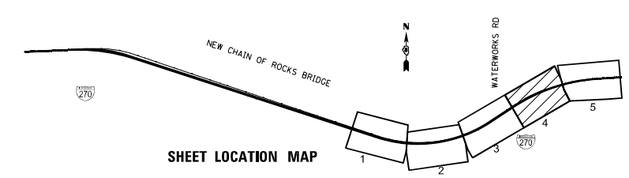

SHEET LOCATION MAP

MODEL: Default
FILE NAME: pw:\\pw01.hanner-inc.com:HS_Transportation\Documents\1815900-FA\270\MississippiRiverPh2\CAD_Sheets\Drainage\0876190-ldr-drain-004.dgn

MILLENNIA PROFESSIONAL SERVICES
www.millennia.pro

USER NAME = dbuescher	DESIGNED - ERO	REVISED -	
	DRAWN - DDB	REVISED -	
PLOT SCALE = 50.0000 ' / in.	CHECKED - MJR	REVISED -	
PLOT DATE = 11/15/2021	DATE - 2021.11.15	REVISED -	

STATE OF ILLINOIS
DEPARTMENT OF TRANSPORTATION

PROPOSED DRAINAGE PLAN
I-270 OVER MISSISSIPPI

SCALE: 1" = 50' | SHEET OF SHEETS | STA. STA 875+0 TO STA. 890+00

F.A. RTE.	SECTION	COUNTY	TOTAL SHEETS	SHEET NO.
270	60B1	MADISON	860	149
		CONTRACT NO.		
	ILLINOIS	FED. AID PROJECT		

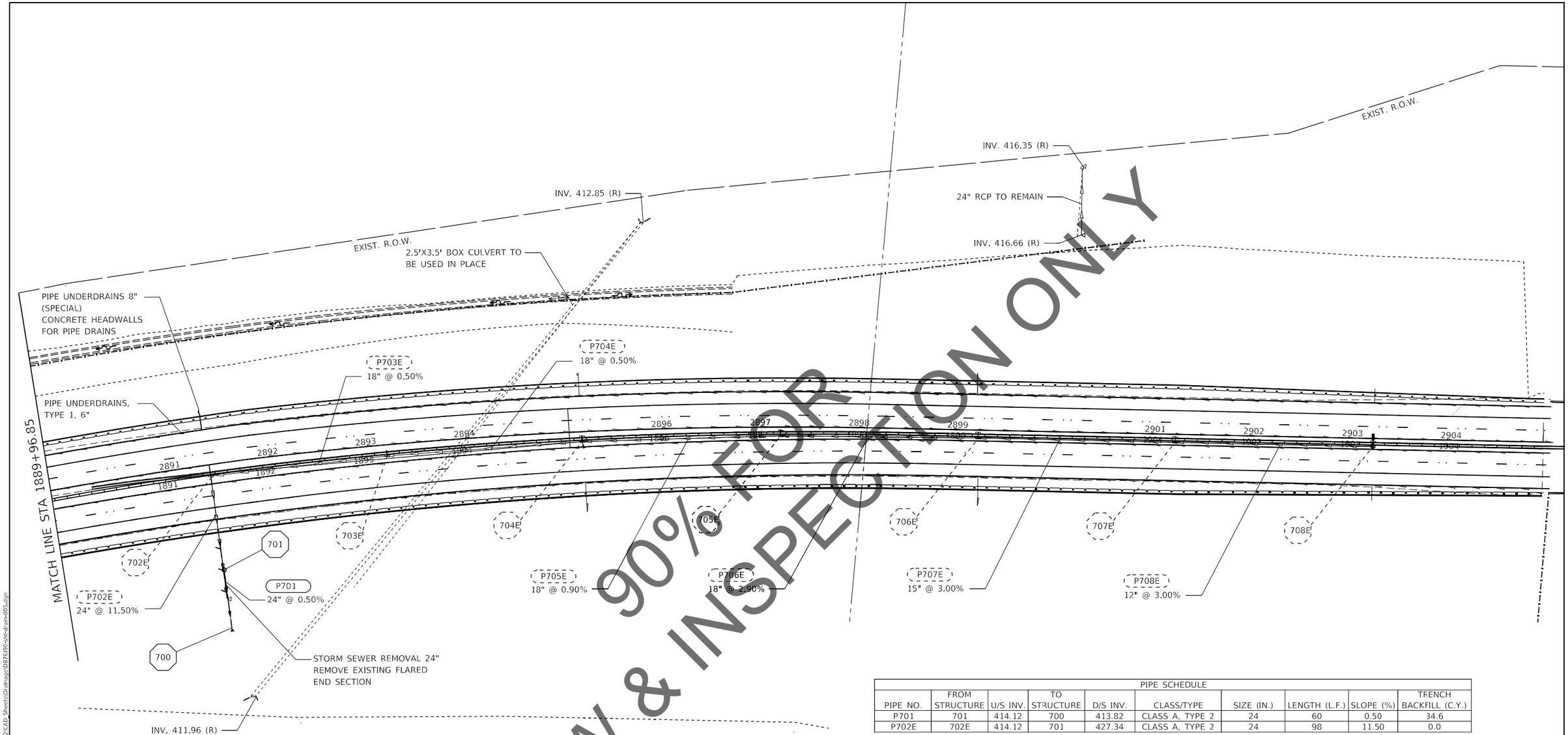

PIPE SCHEDULE									
PIPE NO.	FROM STRUCTURE	U/S INV.	TO STRUCTURE	D/S INV.	CLASS/TYPE	SIZE (IN.)	LENGTH (L.F.)	SLOPE (%)	TRENCH BACKFILL (C.Y.)
P701	701	414.12	700	413.82	CLASS A, TYPE 2	24	60	0.50	34.6
P702E	702E	414.12	701	427.34	CLASS A, TYPE 2	24	98	11.50	0.0

STRUCTURE SCHEDULE							
STR. NO.	EB STATION	OFFSET		TYPE	FS/G	WB RIM EL.	EB RIM EL.	INV.
700	1891+58.87	147.2	RT	24" FES				413.82
701	1891+59.33	87.9	RT	MH DIA 4'	TY 1 (CLOSED)		434.00	414.12
702E	1891+59.29	8.1	LT	DRAIN STRUCTURES TY 4 WITH 1	TY 20		447.67	435.16

LEGEND

XXX STRUCTURE

PXXX STORM SEWER FROM U/S STRUCTURE

N

0 50 100 150

SCALE IN FEET

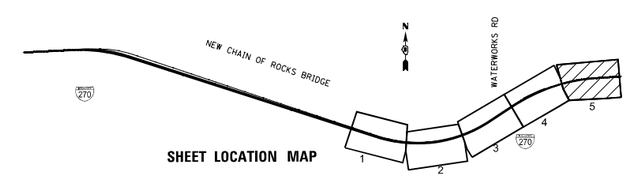

SHEET LOCATION MAP

MODEL: Default
FILE NAME: pw:\\pw01.hornershifflinx.com:HS Transportation\Documents\1815900-FA1270MississippiRiver\Ph2\CAD Sheets\Drainage\D876190-sht-drain-005.dgn

MILLENNIA PROFESSIONAL SERVICES
www.millennia.pro

USER NAME = dbuescher	DESIGNED - ERO	REVISED -	
	DRAWN - DDB	REVISED -	
PLOT SCALE = 50.0000 ' / in.	CHECKED - MJR	REVISED -	
PLOT DATE = 11/18/2021	DATE - 2021.11.15	REVISED -	

STATE OF ILLINOIS
DEPARTMENT OF TRANSPORTATION

PROPOSED DRAINAGE PLAN
I-270 OVER MISSISSIPPI

SCALE: 1" = 50' | SHEET OF SHEETS | STA. 890+00 TO STA.

F.A. RTE.	SECTION	COUNTY	TOTAL SHEETS	SHEET NO.
270	60B1	MADISON	860	150

CONTRACT NO.

ILLINOIS | FED. AID PROJECT

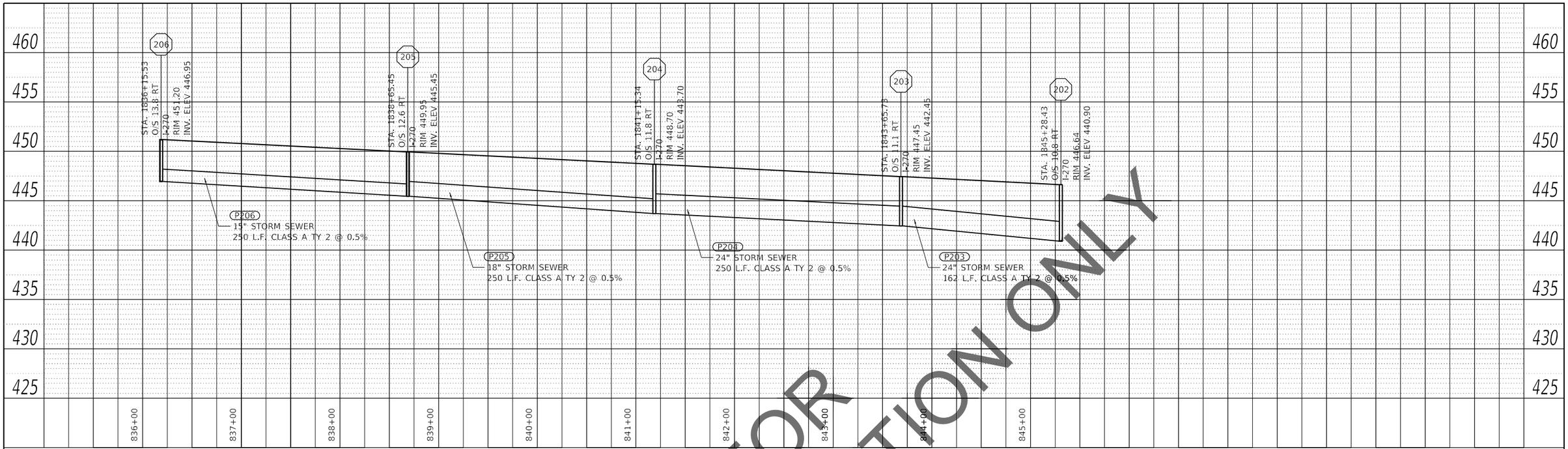

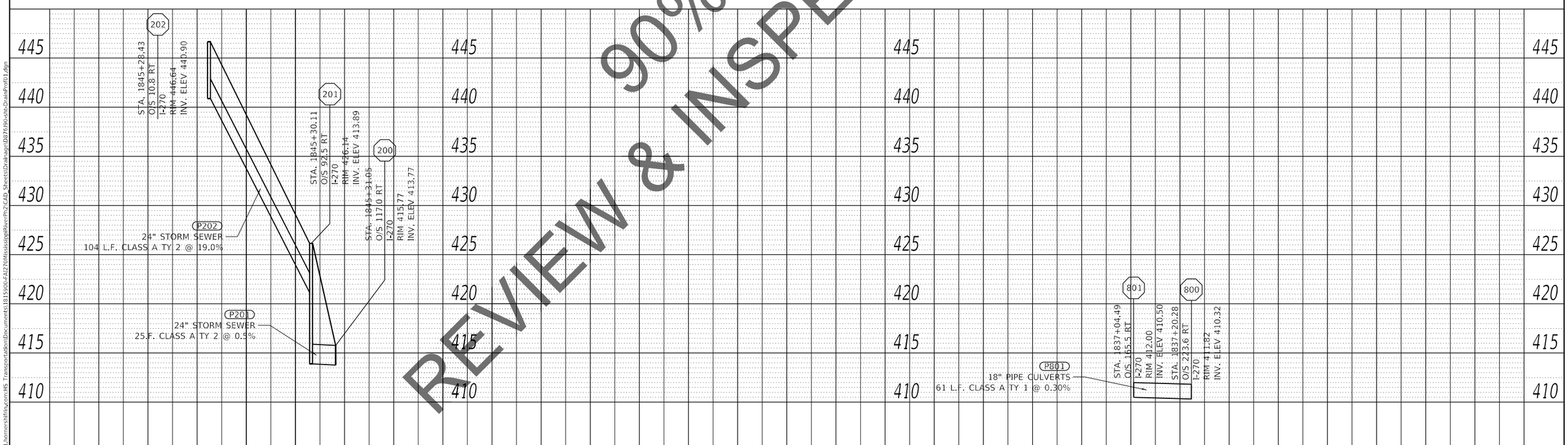

PLAN	BY	DATE
SURVEYED		
PLOTTED		
ALIGNMENT CHECKED		
RT. OF WAY CHECKED		
CADD FILE NAME		
NOTE BOOK NO.		

PROFILE	BY	DATE
SURVEYED		
PLOTTED		
GRADES CHECKED		
R.A. NOTED		
STRUCTURE NOTATNS CHKD		
NOTE BOOK NO.		

MODEL: Default
FILE NAME: pw:\\pw01.hornersilfirn.com:HS_Transportation\Documents\1815900-FA270MississippiRiverPh2\CAD_Sheets\Drainage\D876590-sht-DrainProf01.dgn

MILLENNIA PROFESSIONAL SERVICES
www.millennia.pro

USER NAME = dbuescher	DESIGNED - ERO	REVISED -	
	DRAWN - DDB	REVISED -	
PLOT SCALE = 50.00 ' / in.	CHECKED - MJR	REVISED -	
PLOT DATE = 11/18/2021	DATE - 2021.11.15	REVISED -	

STATE OF ILLINOIS
DEPARTMENT OF TRANSPORTATION

PROPOSED DRAINAGE PROFILE
I-270 OVER MISSISSIPPI

SCALE: 1" = 50' | SHEET OF SHEETS | STA. TO STA.

F.A. RTE.	SECTION	COUNTY	TOTAL SHEETS	SHEET NO.
270	6081	MADISON	860	151
		CONTRACT NO.		
	ILLINOIS	FED. AID PROJECT		

PLAN

NOTE BOOK NO.

SURVEYED
PLOTTED
ALIGNMENT CHECKED
RT. OF WAY CHECKED
CADD FILE NAME

BY | DATE

PROFILE

NOTE BOOK NO.

SURVEYED
PLOTTED
GRADES CHECKED
R.A. NOTED
STRUCTURE NOTATNS CHKD

BY | DATE

MODEL: Default
FILE NAME: pw:\\pwd1.hormersfirm.com:HS Transportation\Documents\1815900-FA270MississippiRiverPh2\CAD_Sheets\Drainage\D876590-sht-DrainProf02.dgn

MILLENNIA PROFESSIONAL SERVICES
www.millennia.pro

USER NAME = dbuescher	DESIGNED - ERO	REVISED -
	DRAWN - DDB	REVISED -
PLOT SCALE = 50.00 ' / in.	CHECKED - MJR	REVISED -
PLOT DATE = 11/18/2021	DATE - 2021.11.15	REVISED -

STATE OF ILLINOIS
DEPARTMENT OF TRANSPORTATION

PROPOSED DRAINAGE PROFILE
I-270 OVER MISSISSIPPI

SCALE: 1" = 50' | SHEET OF SHEETS | STA. TO STA.

F.A. RTE.	SECTION	COUNTY	TOTAL SHEETS	SHEET NO.
270	6081	MADISON	860	152

CONTRACT NO.

ILLINOIS | FED. AID PROJECT

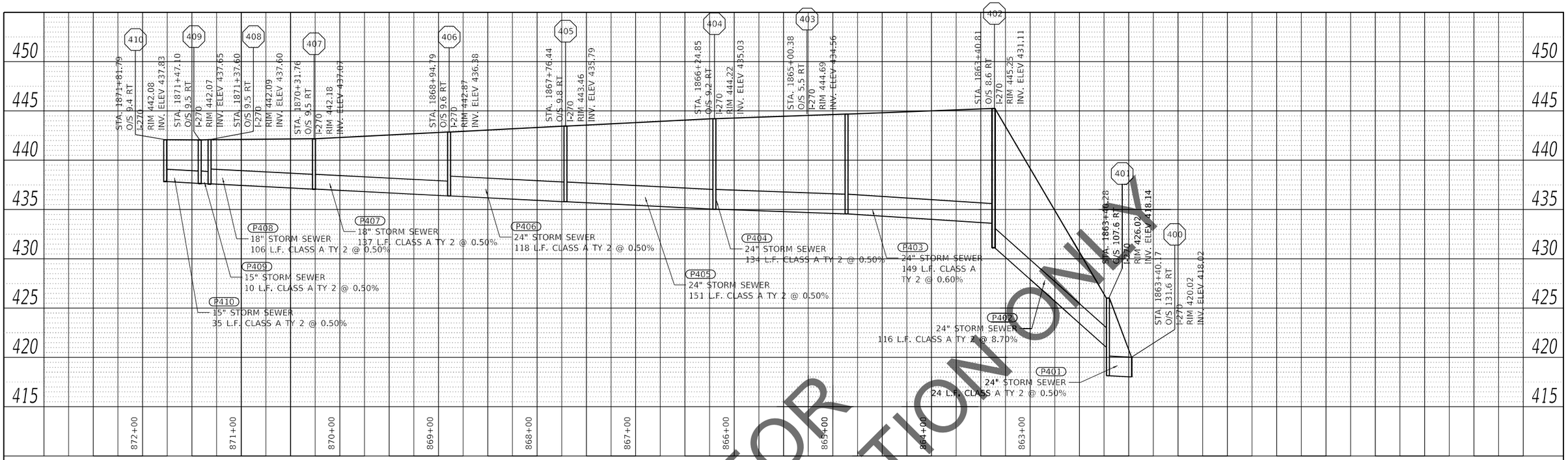

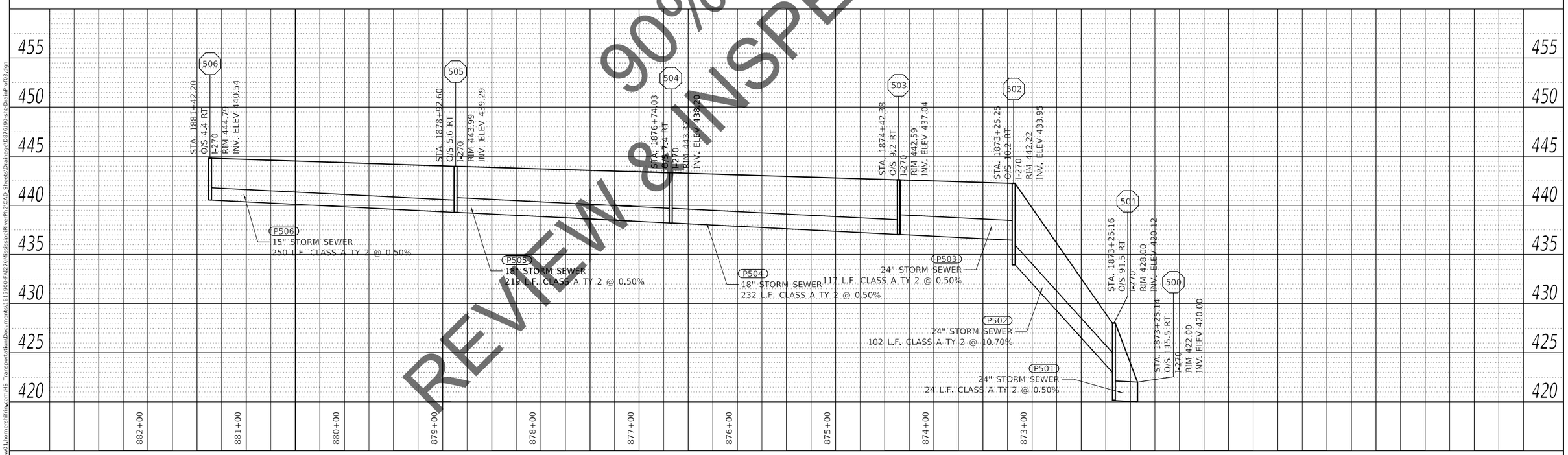

PLAN
NOTE BOOK NO.
SURVEYED
PLOTTED
ALIGNMENT CHECKED
RT. OF WAY CHECKED
CADD FILE NAME
BY
DATE

PROFILE
NOTE BOOK NO.
SURVEYED
PLOTTED
ALIGNMENT CHECKED
R.R. NOTED
STRUCTURE NOTATNS CHKD
BY
DATE

MODEL: Default
FILE NAME: pw:\\pwd01.hornersliffin.com:HS Transportation\Documents\1815900-FA270MississippiRiverPh2\CAD Sheets\Drainage\D876590-sht-DrainProf03.dgn

MILLENNIA PROFESSIONAL SERVICES
www.millennia.pro

USER NAME = dbuescher	DESIGNED - ERO	REVISED -	
	DRAWN - DDB	REVISED -	
PLOT SCALE = 50.00 ' / in.	CHECKED - MJR	REVISED -	
PLOT DATE = 11/18/2021	DATE - 2021.11.15	REVISED -	

STATE OF ILLINOIS
DEPARTMENT OF TRANSPORTATION

PROPOSED DRAINAGE PROFILE
I-270 OVER MISSISSIPPI

SCALE: 1" = 50' | SHEET OF SHEETS | STA. TO STA.

F.A. RTE.	SECTION	COUNTY	TOTAL SHEETS	SHEET NO.
270	6081	MADISON	860	153

CONTRACT NO.

ILLINOIS | FED. AID PROJECT

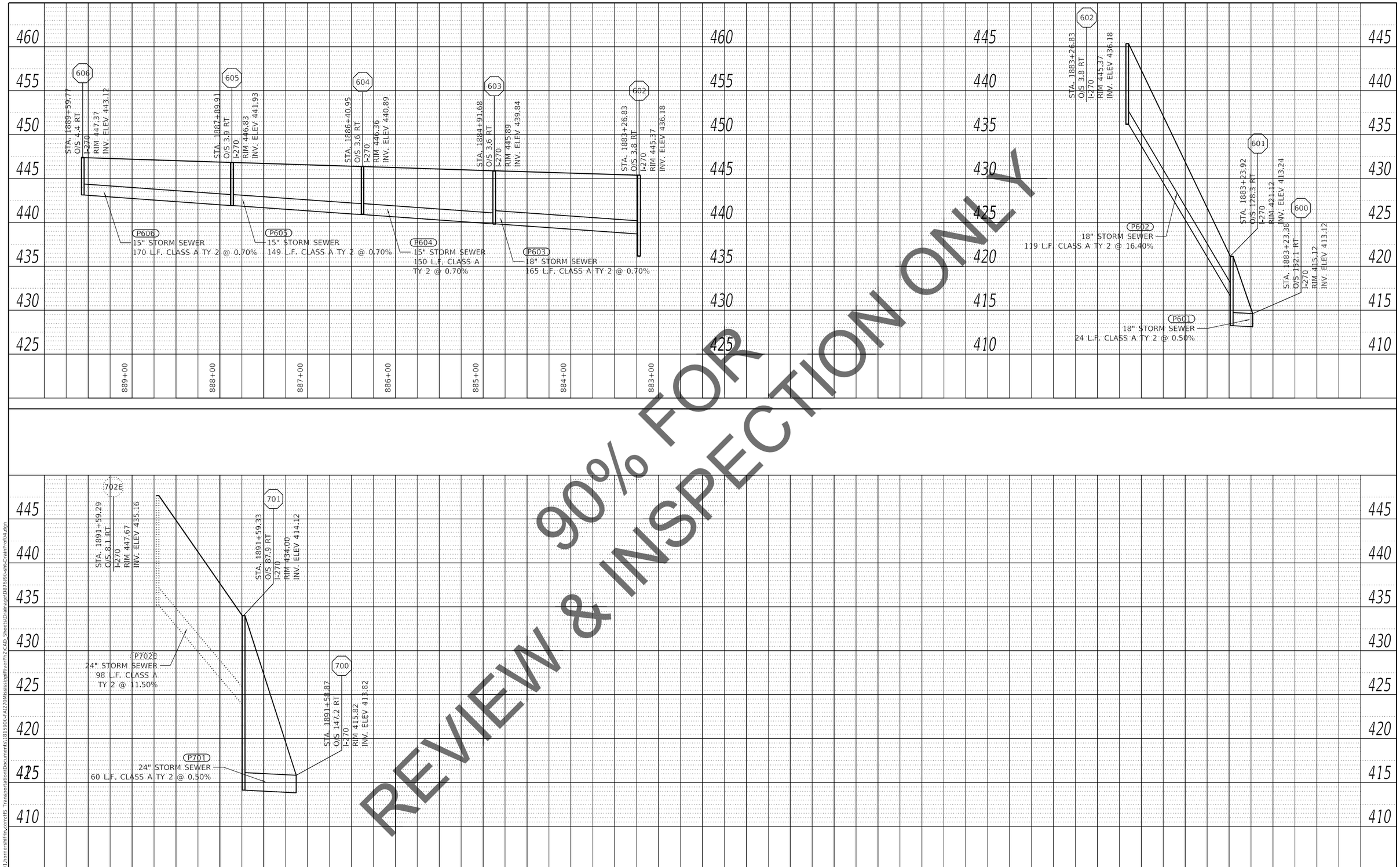

PLAN
NOTE BOOK NO.
SURVEYED
PLOTTED
ALIGNMENT CHECKED
RT. OF WAY CHECKED
CADD FILE NAME
BY
DATE

PROFILE
NOTE BOOK NO.
SURVEYED
PLOTTED
GRADES CHECKED
R.R. NOTED
STRUCTURE NOTATNS CHKD
BY
DATE

MODEL: Default
FILE NAME: pw:\\pw01.hornersilfirn.com:HS_Transportation\Documents\1815900-FA1270MississippiRiverPh2\CAD_Sheets\Drainage\D876190-sht-DrainProf04.dgn

MILLENNIA PROFESSIONAL SERVICES
www.millennia.pro

USER NAME = dbuescher	DESIGNED - ERO	REVISED -	
	DRAWN - DDB	REVISED -	
PLOT SCALE = 50.00 ' / in.	CHECKED - MJR	REVISED -	
PLOT DATE = 11/18/2021	DATE - 2021.11.15	REVISED -	

STATE OF ILLINOIS
DEPARTMENT OF TRANSPORTATION

PROPOSED DRAINAGE PROFILE
I-270 OVER MISSISSIPPI

SCALE: 1" = 50' | SHEET OF SHEETS | STA. TO STA.

F.A. RTE.	SECTION	COUNTY	TOTAL SHEETS	SHEET NO.
270	6081	MADISON	860	154
		CONTRACT NO.		
	ILLINOIS	FED. AID PROJECT		

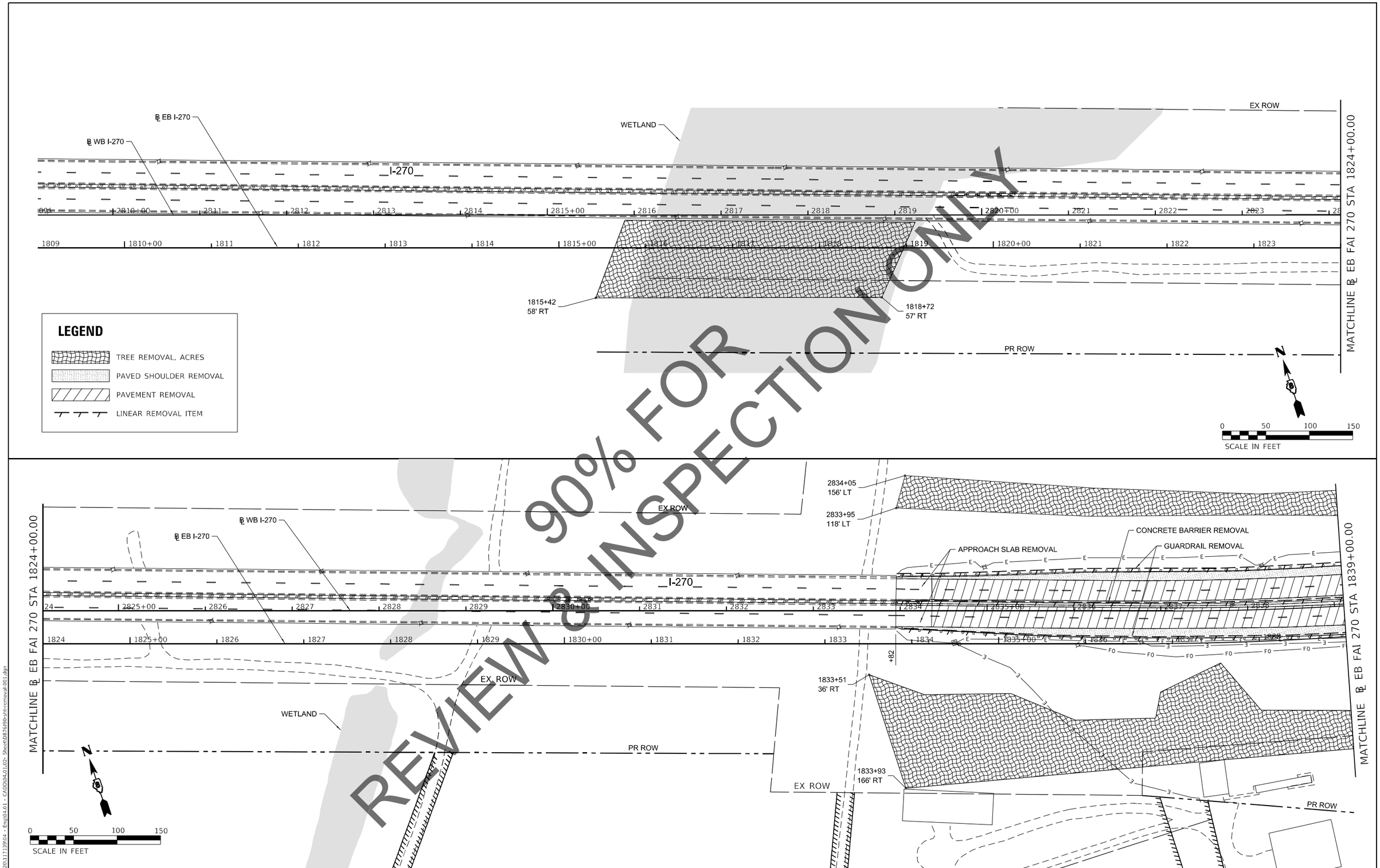

AMERICAN SURVEYING & ENGINEERING, P.C. SURVEYORS•ENGINEERS GEODESISTS•MAPPING SCIENTISTS	USER NAME = colwelij	DESIGNED - JB	REVISED -
		DRAWN - JB	REVISED -
	PLOT SCALE = 50.0000 ' / in.	CHECKED - JC	REVISED -
	PLOT DATE = 11/9/2021	DATE - 11/9/2021	REVISED -

STATE OF ILLINOIS
DEPARTMENT OF TRANSPORTATION

FAI–270
REMOVAL PLAN

SCALE: 1" = 50' | SHEET 1 OF 4 SHEETS | STA. 1809+00.00 TO STA. 1839+00.00

F.A.I. RTE.	SECTION	COUNTY	TOTAL SHEETS	SHEET NO.
270	60(B)-1	MADISON	860	155
		CONTRACT NO. 76J90		
		ILLINOIS	FED. AID PROJECT	

MODEL: Default
FILE NAME: I:\2020\117139\04 - Eng\04.01 - CADD\04.01.02- Sheet\D876J90-plt-removal-001.dgn

MODEL: Default
FILE NAME: I:\2020\11713904 - Eng\04.01 - CADD\04.01.02- Sheet\D876J90-sht-removal-002.dgn

AMERICAN
SURVEYING & ENGINEERING, P.C.
SURVEYORS•ENGINEERS
GEODESISTS•MAPPING SCIENTISTS

USER NAME = colwellj	DESIGNED - JB	REVISED -
	DRAWN - JB	REVISED -
PLOT SCALE = 50.0000 ' / in.	CHECKED - JC	REVISED -
PLOT DATE = 11/9/2021	DATE - 11/9/2021	REVISED -

STATE OF ILLINOIS
DEPARTMENT OF TRANSPORTATION

FAI–270
REMOVAL PLAN

SCALE: 1" = 50' | SHEET 2 OF 4 SHEETS | STA. 1839+00.00 TO STA. 1868+00.00

F.A.I. RTE.	SECTION	COUNTY	TOTAL SHEETS	SHEET NO.
270	60(B)-1	MADISON	860	156
		CONTRACT NO. 76J90		
		ILLINOIS	FED. AID PROJECT	

MODEL: Default
FILE NAME: I:\2020\1171390\04 - Eng\04.01 - CADD\04.01.02- Sheet\0876J90-sht-removal-003.dgn

AMERICAN SURVEYING & ENGINEERING, P.C. SURVEYORS•ENGINEERS GEODESISTS•MAPPING SCIENTISTS

USER NAME = colwellj	DESIGNED - JB	REVISED -
	DRAWN - JB	REVISED -
PLOT SCALE = 50.0000 ' / in.	CHECKED - JC	REVISED -
PLOT DATE = 11/9/2021	DATE - 11/9/2021	REVISED -

STATE OF ILLINOIS
DEPARTMENT OF TRANSPORTATION

FAI–270
REMOVAL PLAN

SCALE: 1" = 50' | SHEET 3 OF 4 SHEETS | STA. 1868+00.00 TO STA. 1898+00.00

F.A.I. RTE.	SECTION	COUNTY	TOTAL SHEETS	SHEET NO.
270	60(B)-1	MADISON	860	157
		CONTRACT NO. 76J90		
		ILLINOIS	FED. AID PROJECT	

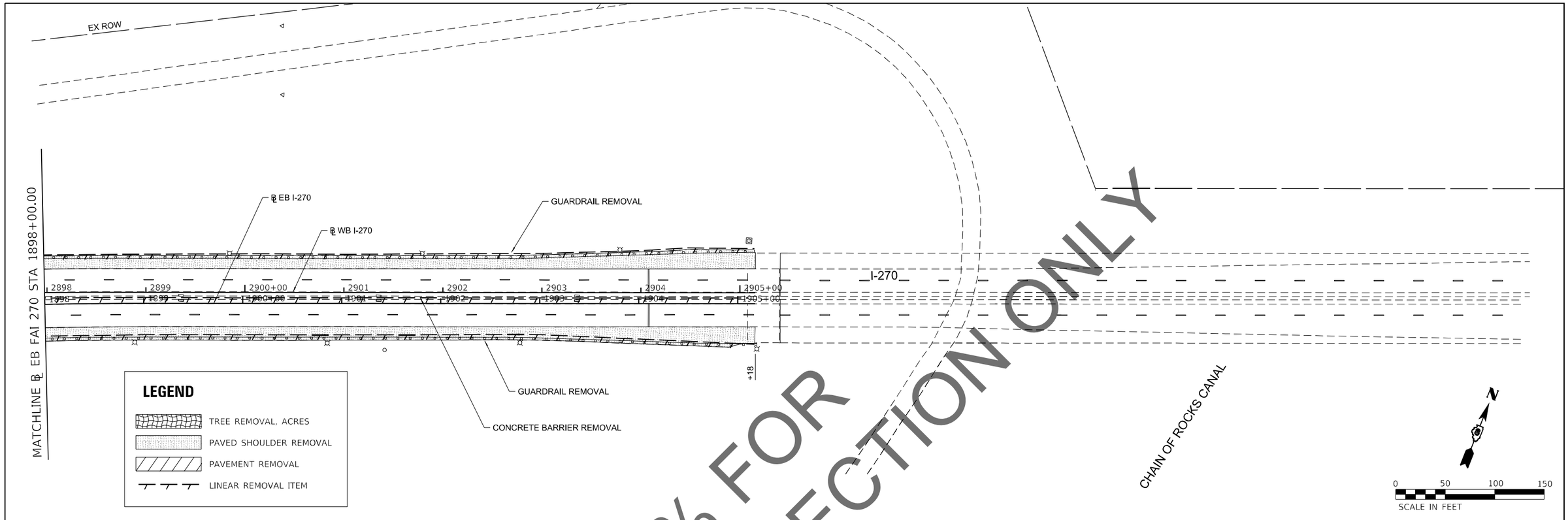

MODEL: Default
FILE NAME: h:\2020\117139\04 - Eng\04.01 - CADD\04.01.02- Sheet\0876\98-jnt-removal-004.dgn

AMERICAN SURVEYING & ENGINEERING, P.C.
SURVEYORS•ENGINEERS
GEODESISTS•MAPPING SCIENTISTS

USER NAME = colwellj	DESIGNED - JB	REVISED -
	DRAWN - JB	REVISED -
PLOT SCALE = 50.0000 ' / in.	CHECKED - JC	REVISED -
PLOT DATE = 11/9/2021	DATE - 11/9/2021	REVISED -

STATE OF ILLINOIS
DEPARTMENT OF TRANSPORTATION

FAI–270
REMOVAL PLAN

SCALE: 1" = 50' | SHEET 4 OF 4 SHEETS | STA. 1898+00.00 TO STA. 1913+00.00

F.A.I. RTE.	SECTION	COUNTY	TOTAL SHEETS	SHEET NO.
270	60(B)-1	MADISON	860	158

CONTRACT NO. 76J90

ILLINOIS | FED. AID PROJECT

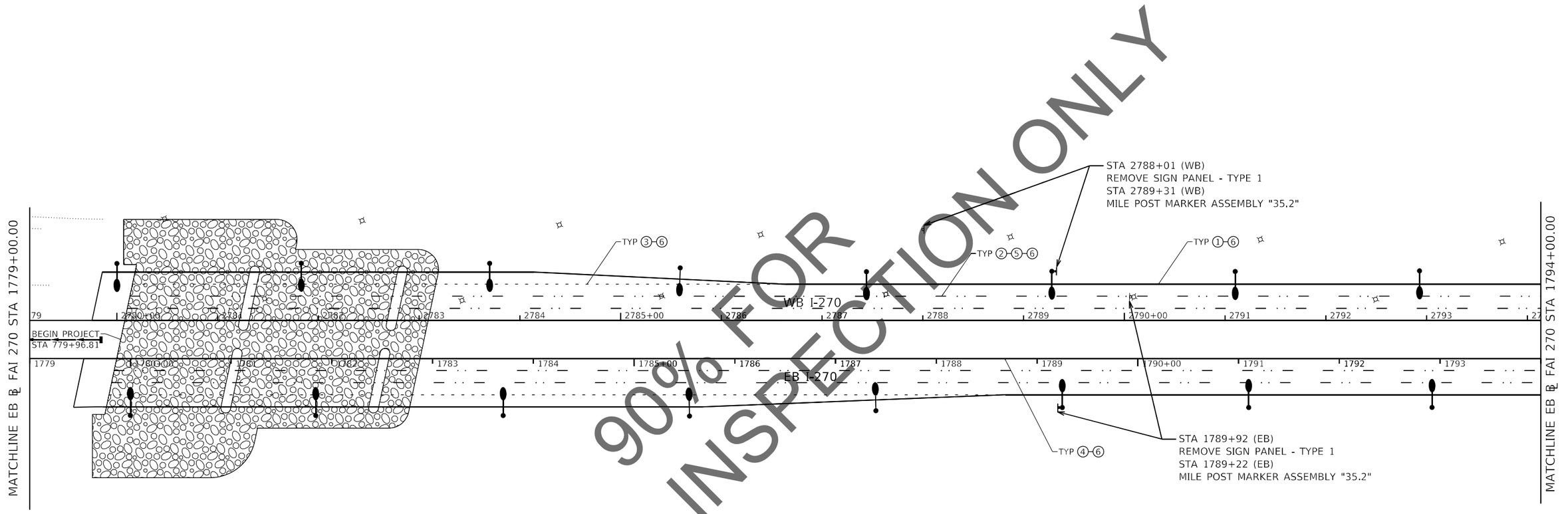

PAVEMENT MARKING LEGEND

1 - PREFORMED PLASTIC PAVEMENT MARKING, TYPE B - LINE 4", SOLID WHITE
2 - PREFORMED PLASTIC PAVEMENT MARKING, TYPE B - LINE 4", SKIP DASH (10'-30') WHITE
3 - PREFORMED PLASTIC PAVEMENT MARKING, TYPE B - LINE 4", SKIP DASH (2'-6') WHITE
4 - PREFORMED PLASTIC PAVEMENT MARKING, TYPE B - LINE 4", SOLID YELLOW
5 - RAISED REFLECTIVE PAVEMENT MARKER - DOUBLE ONE-WAY CRYSTAL @ 80' C-C
6 - GROOVING FOR RECESSED PAVEMENT MARKING 5" & CONTRAST PAVEMENT MARKINGS

PAVEMENT MARKINGS ARE DESIGNED FOR THE ULTIMATE SIX-LANE CONFIGURATION
IN ANTICIPATION OF PROJECT APPROVAL OF CURRENT SIX-LANE STUDY FOR I-270 PRIOR TO PS&E

N

0 50 100 150
SCALE IN FEET

MODEL:
FILE NAME: G:\PE\Idot_2017-1213 PTB 185 ITEM 20 FAI 270 OVER MISSISSIPPI RIVER PH II DB HORNER SMFRIN\CADD\CADD Sheets\D876190-sht-pmk-sign-001.dgn

FUHRMANN ENGINEERING
WWW. FUHRMANN-ENG .COM

USER NAME = untitled	DESIGNED -	REVISED -	
	DRAWN -	REVISED -	
PLOT SCALE = 50.0000 ' / in.	CHECKED -	REVISED -	
PLOT DATE = 11/16/2021	DATE -	REVISED -	

STATE OF ILLINOIS
DEPARTMENT OF TRANSPORTATION

FAI–270
PAVEMENT MARKING & SIGNING

SCALE: 1" = 50' | SHEET 1 OF 9 SHEETS | STA. 1779+00.00 TO STA. 1794+00.00

F.A.I. RTE.	SECTION	COUNTY	TOTAL SHEETS	SHEET NO.
270	60(B)-1	MADISON	860	159

CONTRACT NO. 76J90

ILLINOIS | FED. AID PROJECT

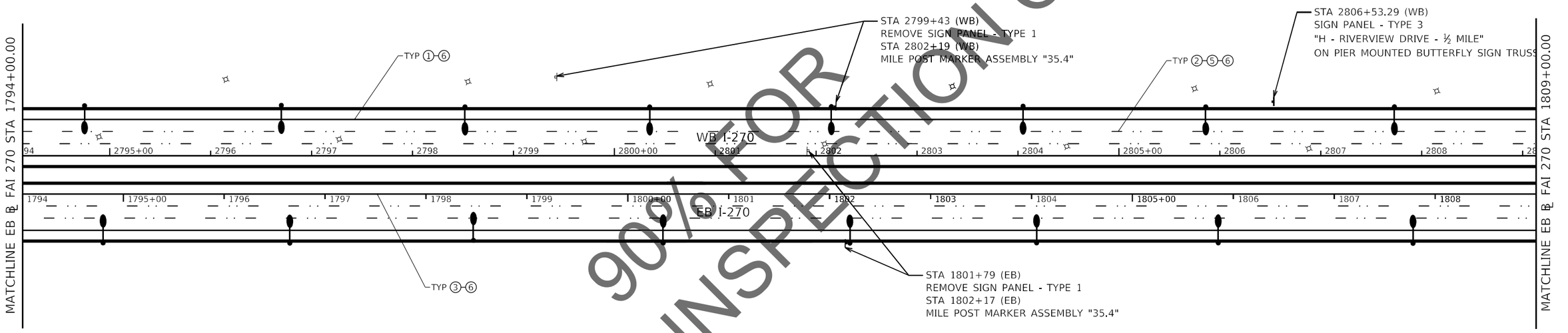

PAVEMENT MARKING LEGEND

1 - PREFORMED PLASTIC PAVEMENT MARKING, TYPE B - LINE 4", SOLID WHITE
2 - PREFORMED PLASTIC PAVEMENT MARKING, TYPE B - LINE 4", SKIP DASH (10'-30') WHITE
3 - PREFORMED PLASTIC PAVEMENT MARKING, TYPE B - LINE 4", SKIP DASH (2'-6') WHITE
4 - PREFORMED PLASTIC PAVEMENT MARKING, TYPE B - LINE 4", SOLID YELLOW
5 - RAISED REFLECTIVE PAVEMENT MARKER - DOUBLE ONE-WAY CRYSTAL @ 80' C-C
6 - GROOVING FOR RECESSED PAVEMENT MARKING 5" & CONTRAST PAVEMENT MARKINGS

PAVEMENT MARKINGS ARE DESIGNED FOR THE ULTIMATE SIX-LANE CONFIGURATION
IN ANTICIPATION OF PROJECT APPROVAL OF CURRENT SIX-LANE STUDY FOR I-270 PRIOR TO PS&E

N

0 50 100 150
SCALE IN FEET

MODEL:
FILE NAME: G:\FEIJobs_2017\17-1213 PTB 185 ITEM 20 FAI 270 OVER MISSISSIPPI RIVER PH II DB HORNER SHIFRIN\CADD\CADD Sheets\D876J90-sht-pmk-sign-002.dgn

FUHRMANN ENGINEERING
WWW. FUHRMANN-ENG .COM

USER NAME = untitled	DESIGNED -	REVISED -	
	DRAWN -	REVISED -	
PLOT SCALE = 50.0000 ' / in.	CHECKED -	REVISED -	
PLOT DATE = 11/16/2021	DATE -	REVISED -	

STATE OF ILLINOIS
DEPARTMENT OF TRANSPORTATION

FAI–270
PAVEMENT MARKING & SIGNING

SCALE: 1" = 50' | SHEET 2 OF 9 SHEETS | STA. 1794+00.00 TO STA. 1809+00.00

F.A.I. RTE.	SECTION	COUNTY	TOTAL SHEETS	SHEET NO.
270	60(B)-1	MADISON	860	160

CONTRACT NO. 76J90

ILLINOIS | FED. AID PROJECT

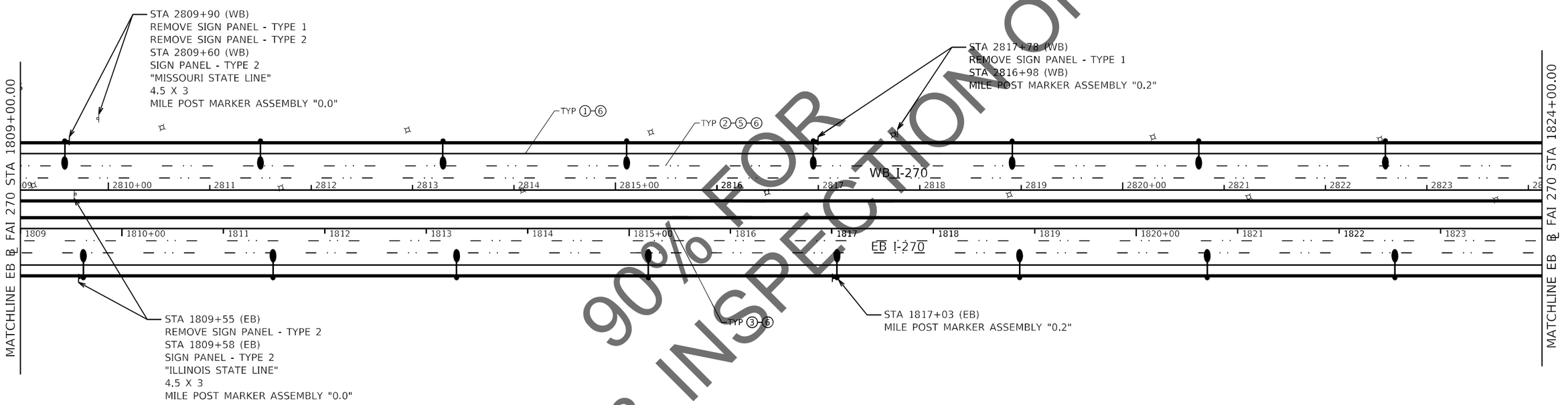

PAVEMENT MARKING LEGEND

1 - PREFORMED PLASTIC PAVEMENT MARKING, TYPE B - LINE 4", SOLID WHITE
2 - PREFORMED PLASTIC PAVEMENT MARKING, TYPE B - LINE 4", SKIP DASH (10'-30') WHITE
3 - PREFORMED PLASTIC PAVEMENT MARKING, TYPE B - LINE 4", SKIP DASH (2'-6') WHITE
4 - PREFORMED PLASTIC PAVEMENT MARKING, TYPE B - LINE 4", SOLID YELLOW
5 - RAISED REFLECTIVE PAVEMENT MARKER - DOUBLE ONE-WAY CRYSTAL @ 80' C-C
6 - GROOVING FOR RECESSED PAVEMENT MARKING 5" & CONTRAST PAVEMENT MARKINGS

PAVEMENT MARKINGS ARE DESIGNED FOR THE ULTIMATE SIX-LANE CONFIGURATION
IN ANTICIPATION OF PROJECT APPROVAL OF CURRENT SIX-LANE STUDY FOR I-270 PRIOR TO PS&E

N

0 50 100 150
SCALE IN FEET

MODEL:
FILE NAME: G:\FEE\Jobs\ 2017\17-1213 PTB 185 ITEM 20 FAI 270 OVER MISSISSIPPI RIVER PH II DB HORNER SHFRIN\CADD\CADD Sheets\D876090-sht-sgnk-sgn-003.dgn

FUHRMANN ENGINEERING
WWW. FUHRMANN-ENG .COM

USER NAME = untitled	DESIGNED -	REVISED -
	DRAWN -	REVISED -
PLOT SCALE = 50.0000 ' / in.	CHECKED -	REVISED -
PLOT DATE = 11/16/2021	DATE -	REVISED -

STATE OF ILLINOIS
DEPARTMENT OF TRANSPORTATION

FAI–270
PAVEMENT MARKING & SIGNING

SCALE: 1" = 50' | SHEET 3 OF 9 SHEETS | STA. 1809+00.00 TO STA. 1824+00.00

F.A.I. RTE.	SECTION	COUNTY	TOTAL SHEETS	SHEET NO.
270	60(B)-1	MADISON	860	161

CONTRACT NO. 76J90

ILLINOIS | FED. AID PROJECT

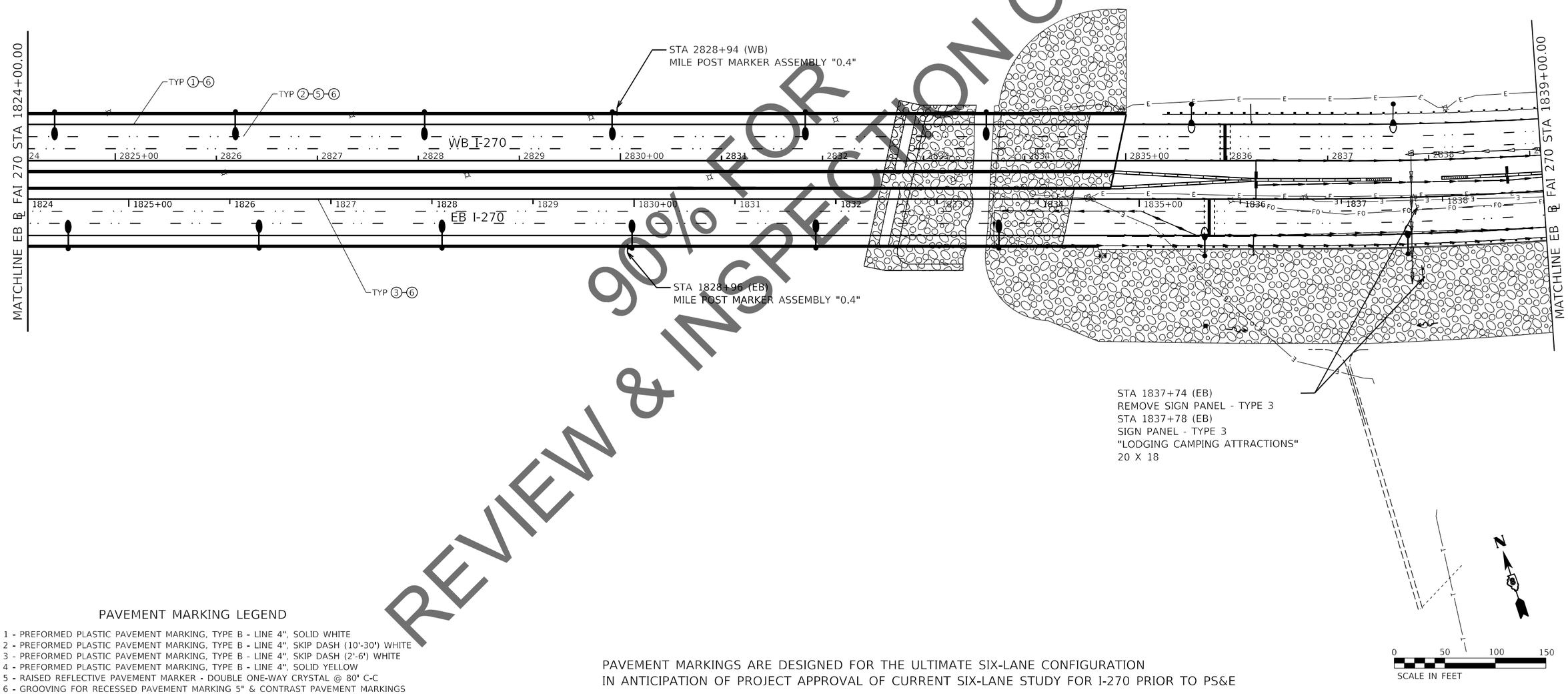

PAVEMENT MARKING LEGEND

1 - PREFORMED PLASTIC PAVEMENT MARKING, TYPE B - LINE 4", SOLID WHITE
2 - PREFORMED PLASTIC PAVEMENT MARKING, TYPE B - LINE 4", SKIP DASH (10'-30') WHITE
3 - PREFORMED PLASTIC PAVEMENT MARKING, TYPE B - LINE 4", SKIP DASH (2'-6') WHITE
4 - PREFORMED PLASTIC PAVEMENT MARKING, TYPE B - LINE 4", SOLID YELLOW
5 - RAISED REFLECTIVE PAVEMENT MARKER - DOUBLE ONE-WAY CRYSTAL @ 80' C-C
6 - GROOVING FOR RECESSED PAVEMENT MARKING 5" & CONTRAST PAVEMENT MARKINGS

PAVEMENT MARKINGS ARE DESIGNED FOR THE ULTIMATE SIX-LANE CONFIGURATION
IN ANTICIPATION OF PROJECT APPROVAL OF CURRENT SIX-LANE STUDY FOR I-270 PRIOR TO PS&E

FUHRMANN ENGINEERING
WWW. FUHRMANN-ENG .COM

USER NAME = untitled	DESIGNED -	REVISED -
	DRAWN -	REVISED -
PLOT SCALE = 50.0000 ' / in.	CHECKED -	REVISED -
PLOT DATE = 11/16/2021	DATE -	REVISED -

STATE OF ILLINOIS
DEPARTMENT OF TRANSPORTATION

FAI–270
PAVEMENT MARKING & SIGNING

SCALE: 1" = 50' | SHEET 4 OF 9 SHEETS | STA. 1824+00.00 TO STA. 1839+00.00

F.A.I. RTE.	SECTION	COUNTY	TOTAL SHEETS	SHEET NO.
270	60(B)-1	MADISON	860	162

CONTRACT NO. 76J90

ILLINOIS | FED. AID PROJECT

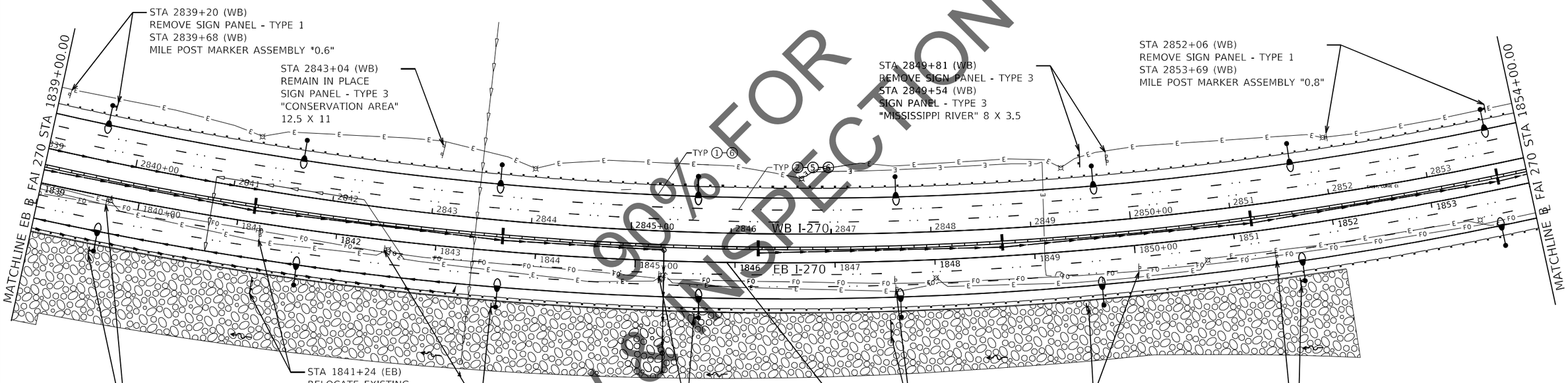

N

0 50 100 150
SCALE IN FEET

PAVEMENT MARKING LEGEND

1 - PREFORMED PLASTIC PAVEMENT MARKING, TYPE B - LINE 4", SOLID WHITE
2 - PREFORMED PLASTIC PAVEMENT MARKING, TYPE B - LINE 4", SKIP DASH (10'-30') WHITE
3 - PREFORMED PLASTIC PAVEMENT MARKING, TYPE B - LINE 4", SKIP DASH (2'-6') WHITE
4 - PREFORMED PLASTIC PAVEMENT MARKING, TYPE B - LINE 4", SOLID YELLOW
5 - RAISED REFLECTIVE PAVEMENT MARKER - DOUBLE ONE-WAY CRYSTAL @ 80' C-C
6 - GROOVING FOR RECESSED PAVEMENT MARKING 5" & CONTRAST PAVEMENT MARKINGS

PAVEMENT MARKINGS ARE DESIGNED FOR THE ULTIMATE SIX-LANE CONFIGURATION
IN ANTICIPATION OF PROJECT APPROVAL OF CURRENT SIX-LANE STUDY FOR I-270 PRIOR TO PS&E

MODEL:
FILE NAME: G:\FEJobs\2017\17-1213 PTB 185 ITEM 20 FAI 270 OVER MISSISSIPPI RIVER PH II 08 HORNER SHIFRIN\CADD\CADD Sheets\D876J90-sht-pmk-sign-005.dgn

FUHRMANN ENGINEERING
WWW. FUHRMANN-ENG .COM

USER NAME = untitled	DESIGNED -	REVISED -
	DRAWN -	REVISED -
PLOT SCALE = 50.0000 ' / in.	CHECKED -	REVISED -
PLOT DATE = 11/16/2021	DATE -	REVISED -

STATE OF ILLINOIS
DEPARTMENT OF TRANSPORTATION

FAI–270
PAVEMENT MARKING & SIGNING

SCALE: 1" = 50' | SHEET 5 OF 9 SHEETS | STA. 1839+00.00 TO STA. 1854+00.00

F.A.I. RTE.	SECTION	COUNTY	TOTAL SHEETS	SHEET NO.
270	60(B)-1	MADISON	860	163
		CONTRACT NO. 76J90		
		ILLINOIS	FED. AID PROJECT	

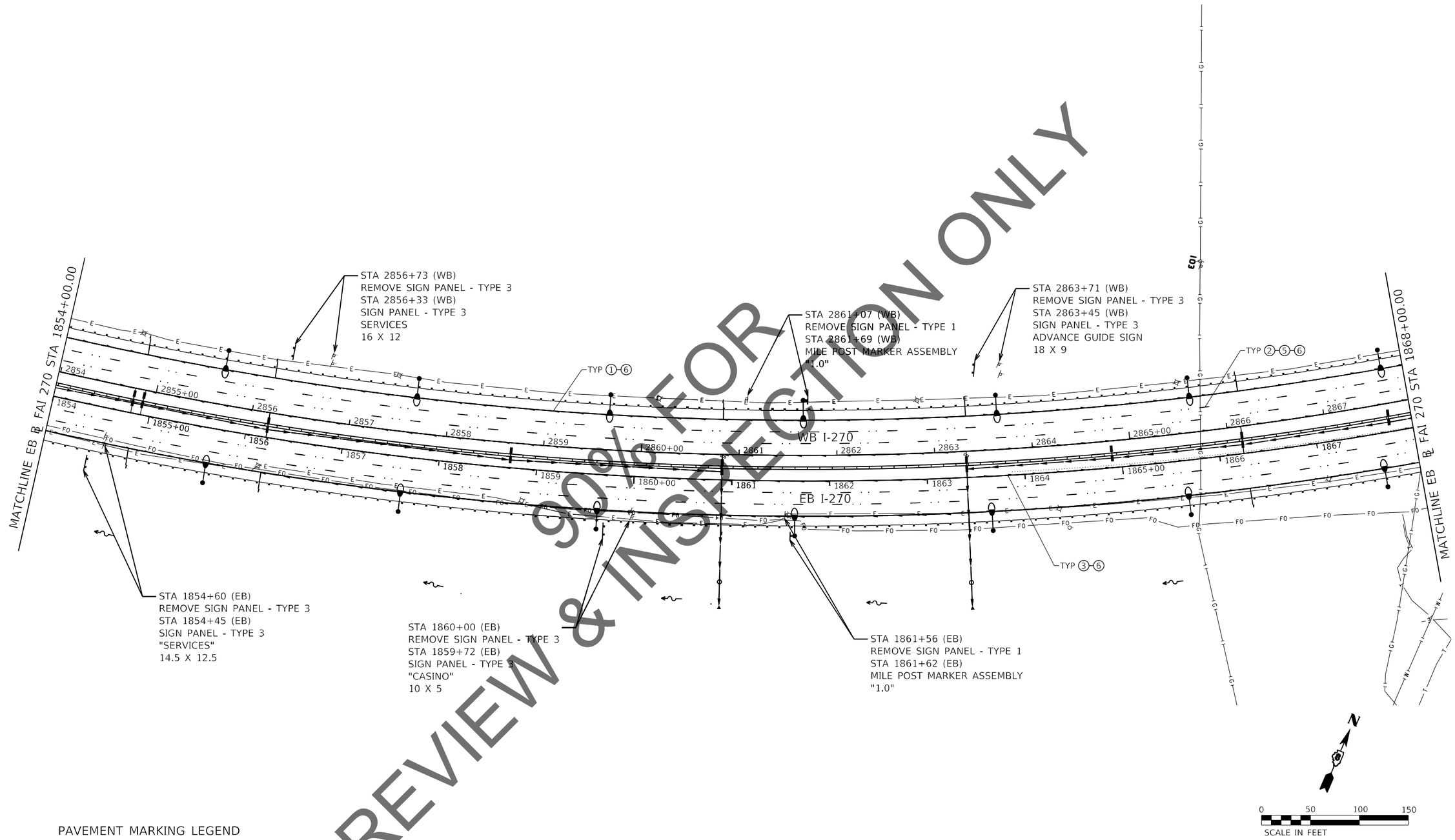

PAVEMENT MARKING LEGEND

1 - PREFORMED PLASTIC PAVEMENT MARKING, TYPE B - LINE 4", SOLID WHITE
2 - PREFORMED PLASTIC PAVEMENT MARKING, TYPE B - LINE 4", SKIP DASH (10'-30') WHITE
3 - PREFORMED PLASTIC PAVEMENT MARKING, TYPE B - LINE 4", SKIP DASH (2'-6') WHITE
4 - PREFORMED PLASTIC PAVEMENT MARKING, TYPE B - LINE 4", SOLID YELLOW
5 - RAISED REFLECTIVE PAVEMENT MARKER - DOUBLE ONE-WAY CRYSTAL @ 80' C-C
6 - GROOVING FOR RECESSED PAVEMENT MARKING 5" & CONTRAST PAVEMENT MARKINGS

PAVEMENT MARKINGS ARE DESIGNED FOR THE ULTIMATE SIX-LANE CONFIGURATION
IN ANTICIPATION OF PROJECT APPROVAL OF CURRENT SIX-LANE STUDY FOR I-270 PRIOR TO PS&E

MODEL:
FILE NAME: G:\FEIjobs_2017\17-1213 PTB 185 ITEM 20 FAI 270 OVER MISSISSIPPI RIVER PH II D8 HORNER SHIFRIN\CADD\CADD Sheets\D876J90-sht-pmk-sign-006.dgn

FUHRMANN ENGINEERING
WWW. FUHRMANN-ENG .COM

USER NAME = untitled	DESIGNED -	REVISED -
	DRAWN -	REVISED -
PLOT SCALE = 50.0000 ' / in.	CHECKED -	REVISED -
PLOT DATE = 11/16/2021	DATE -	REVISED -

STATE OF ILLINOIS
DEPARTMENT OF TRANSPORTATION

FAI–270
PAVEMENT MARKING & SIGNING

SCALE: 1" = 50' | SHEET 6 OF 9 SHEETS | STA. 1854+00.00 TO STA. 1868+00.00

F.A.I. RTE.	SECTION	COUNTY	TOTAL SHEETS	SHEET NO.
270	60(B)-1	MADISON	860	164

CONTRACT NO. 76J90

ILLINOIS | FED. AID PROJECT

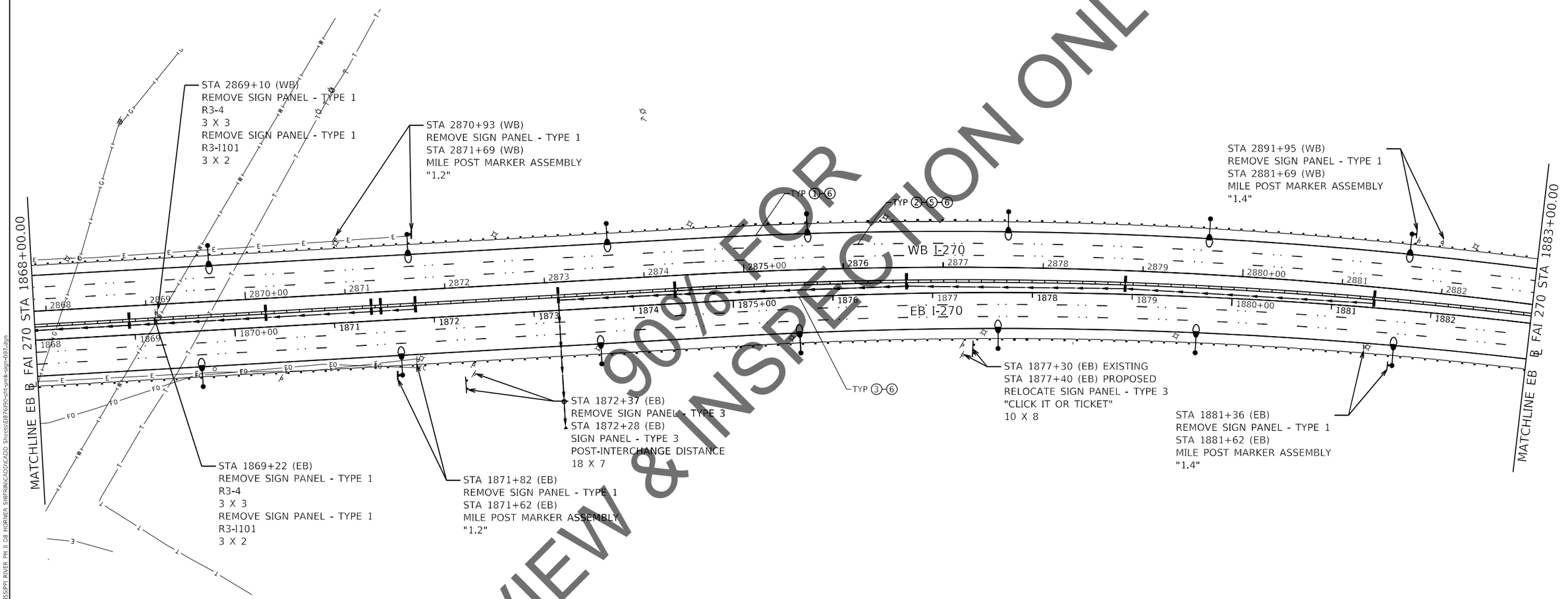

N

0 50 100 150
SCALE IN FEET

PAVEMENT MARKING LEGEND

1 - PREFORMED PLASTIC PAVEMENT MARKING, TYPE B - LINE 4", SOLID WHITE
2 - PREFORMED PLASTIC PAVEMENT MARKING, TYPE B - LINE 4", SKIP DASH (10'-30') WHITE
3 - PREFORMED PLASTIC PAVEMENT MARKING, TYPE B - LINE 4", SKIP DASH (2'-6') WHITE
4 - PREFORMED PLASTIC PAVEMENT MARKING, TYPE B - LINE 4", SOLID YELLOW
5 - RAISED REFLECTIVE PAVEMENT MARKER - DOUBLE ONE-WAY CRYSTAL @ 80' C-C
6 - GROOVING FOR RECESSED PAVEMENT MARKING 5" & CONTRAST PAVEMENT MARKINGS

PAVEMENT MARKINGS ARE DESIGNED FOR THE ULTIMATE SIX-LANE CONFIGURATION
IN ANTICIPATION OF PROJECT APPROVAL OF CURRENT SIX-LANE STUDY FOR I-270 PRIOR TO PS&E

MODEL:
FILE NAME: G:\FE\jobs\ 2017\17-1213 PTB 185 ITEM 20 FAI 270 OVER MISSISSIPPI RIVER PH II D8 HORNER SHIFRIN\CADD\CADD Sheets\0876J90-sht-smk-sign-4097.dgn

FUHRMANN ENGINEERING
WWW. FUHRMANN-ENG .COM

USER NAME = untitled	DESIGNED -	REVISED -
	DRAWN -	REVISED -
PLOT SCALE = 50.0000 ' / in.	CHECKED -	REVISED -
PLOT DATE = 11/16/2021	DATE -	REVISED -

STATE OF ILLINOIS
DEPARTMENT OF TRANSPORTATION

FAI–270
PAVEMENT MARKING & SIGNING

SCALE: 1" = 50' | SHEET 7 OF 9 SHEETS | STA. 1868+00.00 TO STA. 1883+00.00

F.A.I. RTE.	SECTION	COUNTY	TOTAL SHEETS	SHEET NO.
270	60(B)-1	MADISON	860	165

CONTRACT NO. 76J90
ILLINOIS | FED. AID PROJECT

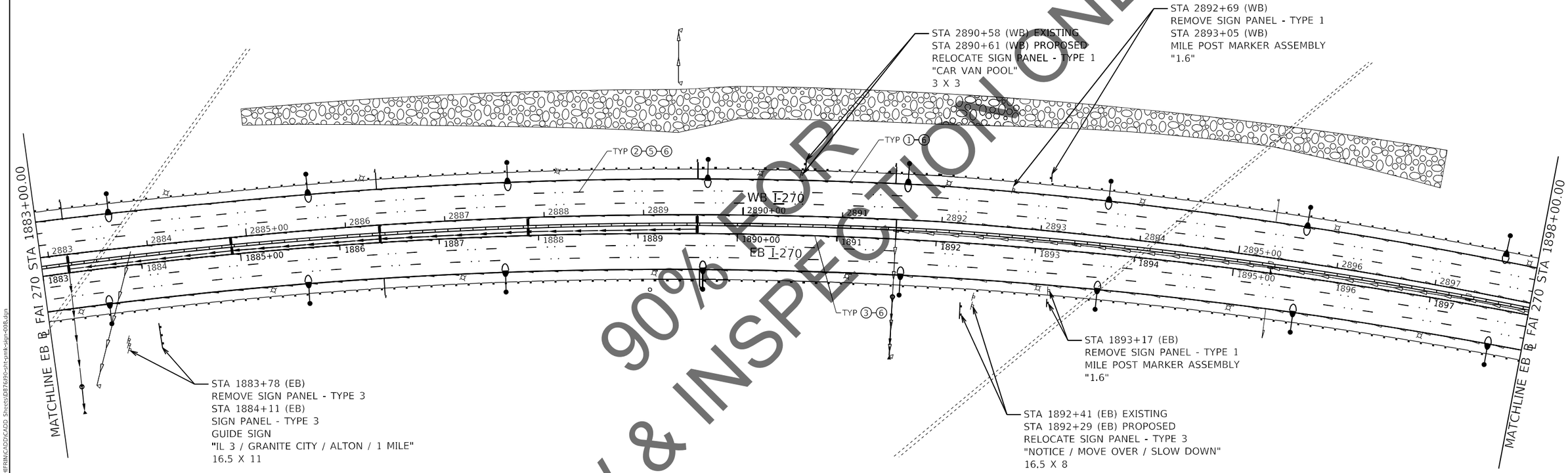

PAVEMENT MARKING LEGEND

1 - PREFORMED PLASTIC PAVEMENT MARKING, TYPE B - LINE 4", SOLID WHITE
2 - PREFORMED PLASTIC PAVEMENT MARKING, TYPE B - LINE 4", SKIP DASH (10'-30') WHITE
3 - PREFORMED PLASTIC PAVEMENT MARKING, TYPE B - LINE 4", SKIP DASH (2'-6') WHITE
4 - PREFORMED PLASTIC PAVEMENT MARKING, TYPE B - LINE 4", SOLID YELLOW
5 - RAISED REFLECTIVE PAVEMENT MARKER - DOUBLE ONE-WAY CRYSTAL @ 80' C-C
6 - GROOVING FOR RECESSED PAVEMENT MARKING 5" & CONTRAST PAVEMENT MARKINGS

PAVEMENT MARKINGS ARE DESIGNED FOR THE ULTIMATE SIX-LANE CONFIGURATION
IN ANTICIPATION OF PROJECT APPROVAL OF CURRENT SIX-LANE STUDY FOR I-270 PRIOR TO PS&E

N

0 50 100 150
SCALE IN FEET

MODEL:
FILE NAME: G:\FEIjobs\2017\17-1213 PTB 185 ITEM 20 FAI 270 OVER MISSISSIPPI RIVER PH II D8 HORNER SHIFRIN\CADD\CADD Sheets\D876J90-sht-pmk-sign-008.dgn

FUHRMANN ENGINEERING
WWW. FUHRMANN-ENG .COM

USER NAME = untitled	DESIGNED -	REVISED -
	DRAWN -	REVISED -
PLOT SCALE = 50.0000 ' / in.	CHECKED -	REVISED -
PLOT DATE = 11/16/2021	DATE -	REVISED -

STATE OF ILLINOIS
DEPARTMENT OF TRANSPORTATION

FAI–270
PAVEMENT MARKING & SIGNING

SCALE: 1" = 50' | SHEET 8 OF 9 SHEETS | STA. 1883+00.00 TO STA. 1898+00.00

F.A.I. RTE.	SECTION	COUNTY	TOTAL SHEETS	SHEET NO.
270	60(B)-1	MADISON	860	166

CONTRACT NO. 76J90
ILLINOIS | FED. AID PROJECT

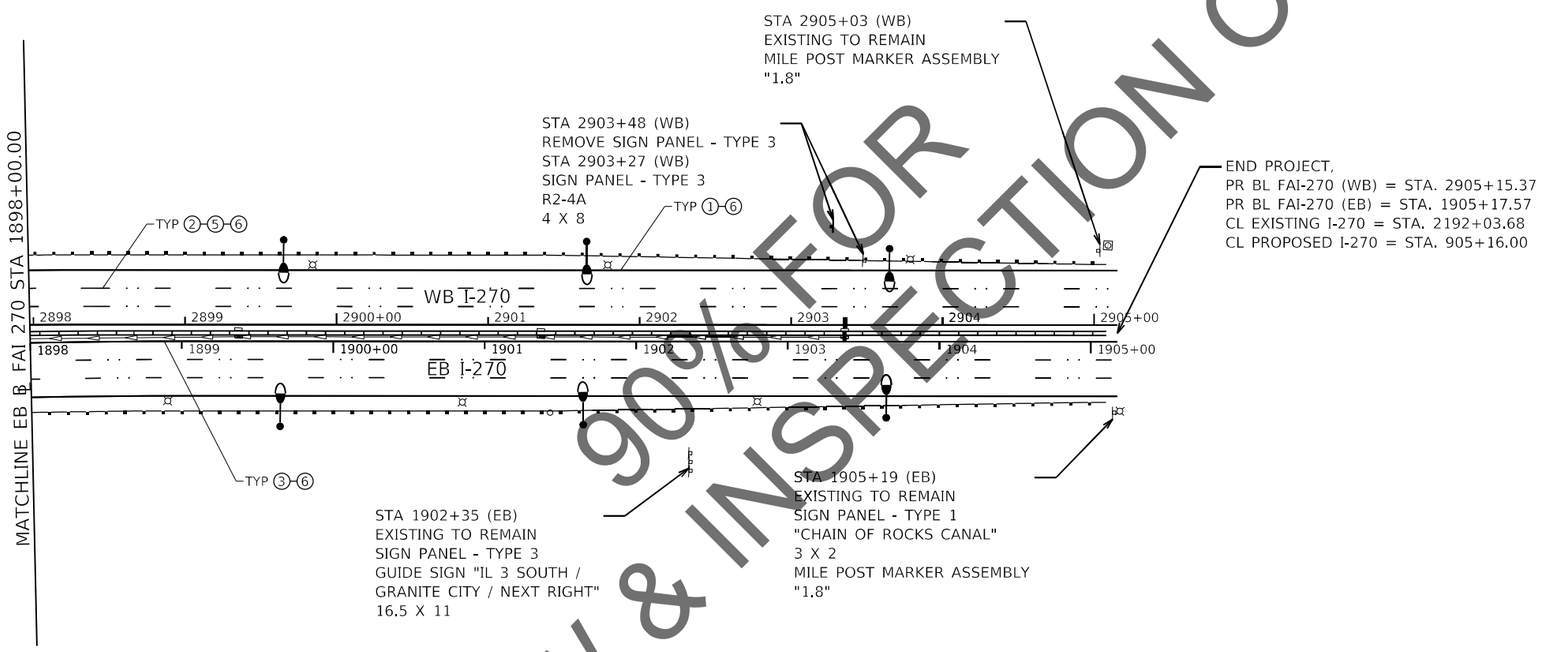

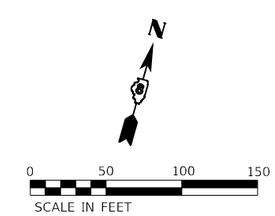

PAVEMENT MARKING LEGEND

1 - PREFORMED PLASTIC PAVEMENT MARKING, TYPE B - LINE 4", SOLID WHITE
2 - PREFORMED PLASTIC PAVEMENT MARKING, TYPE B - LINE 4", SKIP DASH (10'-30') WHITE
3 - PREFORMED PLASTIC PAVEMENT MARKING, TYPE B - LINE 4", SKIP DASH (2'-6') WHITE
4 - PREFORMED PLASTIC PAVEMENT MARKING, TYPE B - LINE 4", SOLID YELLOW
5 - RAISED REFLECTIVE PAVEMENT MARKER - DOUBLE ONE-WAY CRYSTAL @ 80' C-C
6 - GROOVING FOR RECESSED PAVEMENT MARKING 5" & CONTRAST PAVEMENT MARKINGS

PAVEMENT MARKINGS ARE DESIGNED FOR THE ULTIMATE SIX-LANE CONFIGURATION
IN ANTICIPATION OF PROJECT APPROVAL OF CURRENT SIX-LANE STUDY FOR I-270 PRIOR TO PS&E

MODEL:
FILE NAME: G:\FEIjobs\ 2017\17-1213 PTB 185 ITEM 20 FAI 270 OVER MISSISSIPPI RIVER PH II D8 HORNER SHIFRIN\CADD\CADD Sheets\D876J90-pht-pmk-sign-009.dgn

FUHRMANN ENGINEERING
WWW. FUHRMANN-ENG .COM

USER NAME = untitled	DESIGNED -	REVISED -
	DRAWN -	REVISED -
PLOT SCALE = 50.0000 ' / in.	CHECKED -	REVISED -
PLOT DATE = 11/16/2021	DATE -	REVISED -

STATE OF ILLINOIS
DEPARTMENT OF TRANSPORTATION

FAI–270
PAVEMENT MARKING & SIGNING

SCALE: 1" = 50' | SHEET 9 OF 9 SHEETS | STA. 1898+00.00 TO STA. 1905+18.68

F.A.I. RTE.	SECTION	COUNTY	TOTAL SHEETS	SHEET NO.
270	60(B)-1	MADISON	860	167
		CONTRACT NO. 76J90		
		ILLINOIS	FED. AID PROJECT	

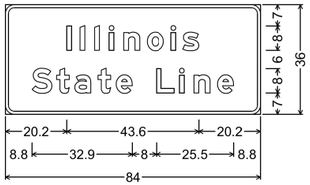

3.0" Radius, 1.0" Border, White on Green;
"Illinois", E Mod 2K;
"State Line", E Mod 2K;
Table of widths and spaces

20.2	I 1.6	2.7	I 1.6	3.2	I 1.6	3.2	I 1.6	3.2	n 5.3	2.5	o 5.4	2.5	I 1.6	2.3	s 5.3	20.2			
8.8	S 6.4	1.6	t 4.2	1.8	a 5.3	2.3	t 4.2	1.8	e 5.3										
		8.0	L 5.9	1.8	i 1.6	3.2	n 5.3	2.5	e 5.2	8.8									

EASTBOUND
EB STA 1809+75
ILLINOIS STATE LINE

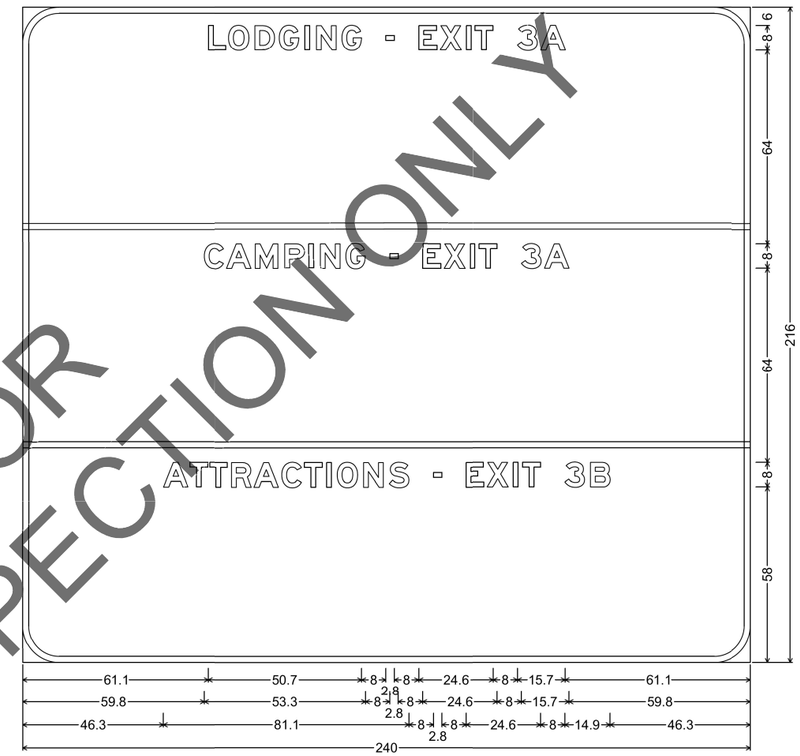

12.0" Radius, 2.0" Border, White on Blue;
"LODGING - EXIT 3A", E Mod 2K; "CAMPING - EXIT 3A", E Mod 2K; "ATTRACTIONS - EXIT 3B", E Mod 2K;
Table of widths and spaces

61.1	L 5.9	1.0	O 6.7	1.9	D 6.5	1.6	G 6.5	1.9	I 1.6	2.2	N 6.5	1.9	G 6.5	8.0	- 2.8	8.0	E 5.9	1.1	X 7.0	1.7	I 1.6	1.4	T 5.9	8.0	3 6.5	1.1	A 8.1	61.1							
59.8	C 6.5	0.9	A 8.1	1.5	M 7.4	2.2	P 6.5	1.5	I 1.6	2.2	N 6.5	1.9	G 6.5	8.0	- 2.8	8.0	E 5.9	1.1	X 7.0	1.7	I 1.6	1.4	T 5.9	8.0	3 6.5	1.1	A 8.1	59.8							
46.3	A 8.1	0.6	T 5.9	0.7	T 5.9	1.4	R 6.5	0.9	A 8.1	1.1	C 6.5	0.9	T 5.9	1.5	I 1.6	1.9	O 6.7	1.9	N 6.5	2.0	S 6.5	8.0	- 2.8												
		8.0	E 5.9	1.1	X 7.0	1.7	I 1.6	1.4	T 5.9	8.0	3 6.5	1.9	B 6.5	46.3																					

EASTBOUND
EB STA 1837+78
SERVICES

FUHRMANN ENGINEERING
WWW. FUHRMANN-ENG .COM

USER NAME = untitled	DESIGNED -	REVISED -
	DRAWN -	REVISED -
PLOT SCALE = 0.0833 ' / in.	CHECKED -	REVISED -
PLOT DATE = 11/12/2021	DATE -	REVISED -

STATE OF ILLINOIS
DEPARTMENT OF TRANSPORTATION

SIGN DETAILS

SCALE: NTS | SHEET 1 OF 7 SHEETS | STA. TO STA.

F.A.I. RTE.	SECTION	COUNTY	TOTAL SHEETS	SHEET NO.
270	60(B)-1	MADISON	860	168
		CONTRACT NO. 76J90		
		ILLINOIS	FED. AID PROJECT	

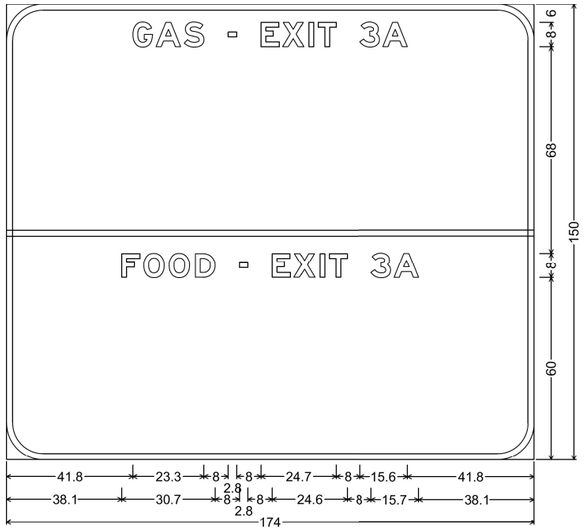

12.0" Radius, 2.0" Border, White on Blue;
"GAS - EXIT 3A", E Mod 2K; "FOOD - EXIT 3A", E Mod 2K;
Table of widths and spaces

41.8	G 6.4	1.2	A 8.0	1.2	S 6.5	8.0	- 2.8	8.0	E 5.9	1.2	X 6.9	1.7	I 1.6	1.4	T 6.0	8.0	3 6.4	1.2	A 8.0	41.8				
38.1	F 5.9	1.4	O 6.7	1.6	O 6.7	1.9	D 6.5	8.0	- 2.8	8.0	E 5.9	1.1	X 7.0	1.7	I 1.6	1.4	T 5.9							
	8.0	3 6.5	1.1	A 8.1	38.1																			

EASTBOUND
EB STA 1854+45
SERVICES

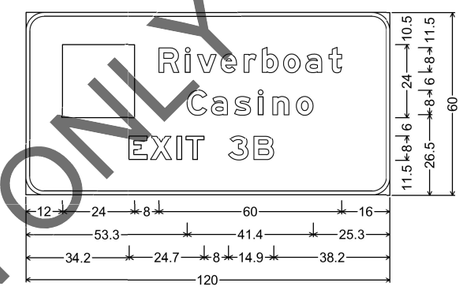

6.0" Radius, 1.3" Border, White on Brown;
"Riverboat", E Mod 2K; "Casino", E Mod 2K;
"EXIT 3B", E Mod 2K;
Table of widths and spaces

12.0	□ 24.0																							
	8.0	R 6.5	2.1	i 1.6	2.4	v 6.1	1.6	e 5.3	2.5	r 4.0	1.9	b 5.3	1.7	o 5.5	1.7	a 5.3	2.3	t 4.2	16.0					
53.3	C 6.5	1.5	a 5.3	2.3	s 5.3	2.5	i 1.6	3.2	n 5.3	2.4	o 5.5	25.3												
34.2	E 6.0	1.1	X 6.9	1.7	I 1.6	1.5	T 5.9	8.0	3 6.5	1.9	B 6.5	38.2												

EASTBOUND
EB STA 1859+72
CASINO

FUHRMANN ENGINEERING
WWW. FUHRMANN-ENG .COM

USER NAME = untitled	DESIGNED -	REVISED -
	DRAWN -	REVISED -
PLOT SCALE = 0.0833 ' / in.	CHECKED -	REVISED -
PLOT DATE = 11/12/2021	DATE -	REVISED -

STATE OF ILLINOIS
DEPARTMENT OF TRANSPORTATION

SIGN DETAILS

SCALE: NTS | SHEET 2 OF 7 SHEETS | STA. TO STA.

F.A.I. RTE.	SECTION	COUNTY	TOTAL SHEETS	SHEET NO.
270	60(B)-1	MADISON	860	169
		CONTRACT NO. 76J90		
		ILLINOIS	FED. AID PROJECT	

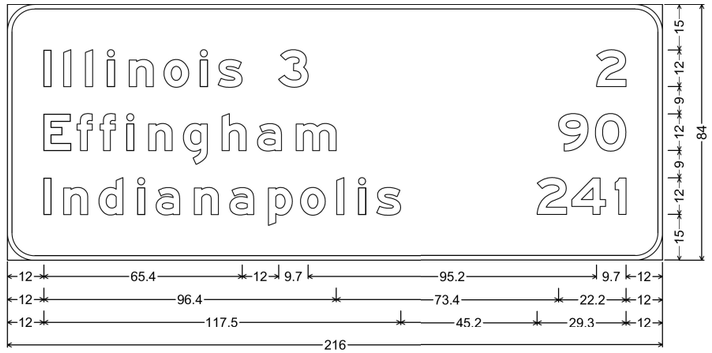

9.0" Radius, 1.5" Border, White on Green;
"Illinois 3", E Mod 2K; "Effingham", E Mod 2K; "Indianapolis", E Mod 2K; "2", E Mod 2K;
"90", E Mod 2K; "241", E Mod 2K;
Table of widths and spaces

12.0	I 2.4	4.1	I 2.4	4.8	I 2.4	4.8	I 2.4	4.8	n 7.9	3.7	o 8.2	3.7	I 2.4	3.5	s 7.9	12.0	3 9.7	95.2	2 9.7	12.0		
12.0	E 8.9	2.0	f 5.1	2.5	f 5.0	3.7	l 2.4	4.8	n 8.0	3.7	g 7.9	4.8	h 7.9	3.7	a 8.0	4.8	m 13.2	73.4	9 9.7	2.4	0 10.1	12.0
12.0	I 2.4	4.1	n 7.9	3.7	d 7.9	4.8	I 2.4	3.8	e 7.9	4.8	n 7.9	3.7	a 7.9	4.8	p 8.0	2.6	o 8.2	3.7	I 2.4	4.8	I 2.4	3.5	s 7.9
45.2	2 9.7	1.7	4 11.2	3.1	1 3.6	12.0																

EASTBOUND
EB STA 1872+28
DISTANCE

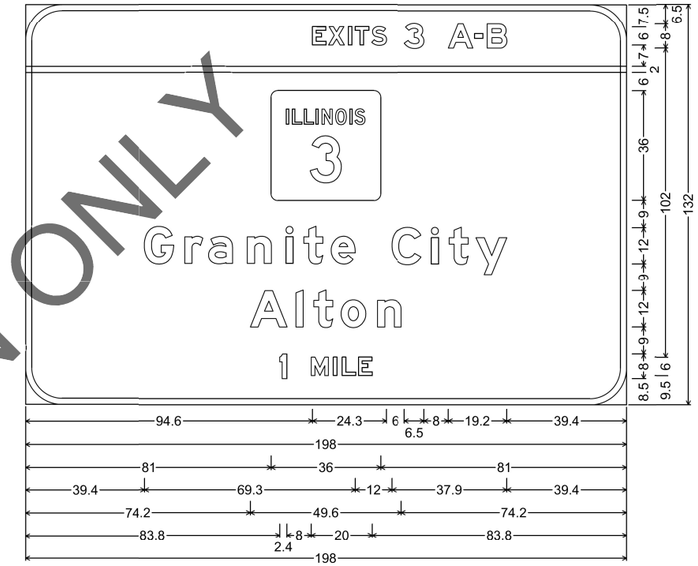

12.0" Radius, 2.0" Border, White on Green;
"EXITS 3 A-B", E Mod 2K; "Granite City", E Mod 2K; "Alton", E Mod 2K;
"1 MILE", E Mod 2K;
Table of widths and spaces

94.6	E 4.5	0.8	X 5.2	1.3	I 1.2	1.1	T 4.4	0.9	S 4.9	6.0	3 6.5	8.0	A 8.0	0.6	- 2.8	1.4	B 6.4	39.4				
0.0	— 198.0	0.0																				
81.0	1 36.0	81.0																				
39.4	G 9.7	3.6	r 6.0	1.8	a 7.9	4.8	n 7.9	4.8	i 2.4	3.5	t 6.2	2.8	e 7.9	12.0	C 9.7	3.4	i 2.4	3.5	t 6.2	2.5	y 10.2	39.4
74.2	A 12.1	2.9	l 2.4	3.4	t 6.3	2.7	o 8.2	3.7	n 7.9	74.2												
83.8	1 2.4	8.0	M 5.6	1.7	I 1.2	1.6	L 4.5	1.0	E 4.4	83.8												

EASTBOUND
EB STA 1884+11
GUIDE

FUHRMANN ENGINEERING WWW. FUHRMANN-ENG .COM	USER NAME = untitled	DESIGNED -	REVISED -	STATE OF ILLINOIS DEPARTMENT OF TRANSPORTATION	SIGN DETAILS	F.A.I. RTE. 270	SECTION 60(B)-1
		DRAWN -	REVISED -			COUNTY MADISON	TOTAL SHEETS 860 / SHEET NO. 170
	PLOT SCALE = 0.0833 ' / in.	CHECKED -	REVISED -			CONTRACT NO. 76J90	
	PLOT DATE = 11/12/2021	DATE -	REVISED -		SCALE: NTS / SHEET 3 OF 7 SHEETS / STA. TO STA.	ILLINOIS	FED. AID PROJECT

6.0" Radius, 1.3" Border, White on Green,
"Mississippi", E Mod 2K; "River", E Mod 2K;
Table of widths and spaces

13.4	M 7.4	2.8	i 1.6	2.3	s 5.3	1.6	s 5.2	2.5	i 1.6	2.3	s 5.3	1.6	s 5.3	2.5	i 1.6	3.2	p 5.3	2.4	p 5.3	2.5	i 1.6	13.4

32.0	R 6.4	2.2	i 1.6	2.3	v 6.2	1.6	e 5.3	2.4	r 4.0	32.0

WESTBOUND
WB STA 2849+53
MISSISSIPPI RIVER

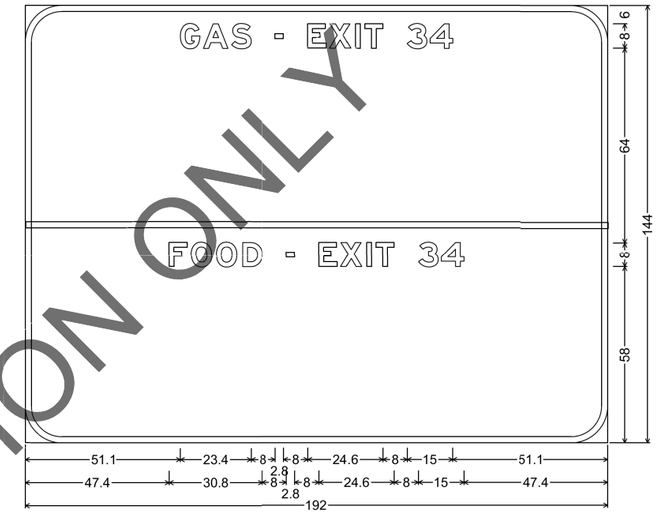

12.0" Radius, 2.0" Border, White on Blue;
"GAS - EXIT 34", E Mod 2K; "FOOD - EXIT 34", E Mod 2K;
Table of widths and spaces

51.1	G 6.5	1.1	A 8.1	1.2	S 6.5	8.0	- 2.8	8.0	E 5.9	1.1	X 7.0	1.7	I 1.6	1.4	T 5.9	8.0	3 6.5	1.0	4 7.5	51.1

47.4	F 6.0	1.3	O 6.7	1.6	O 6.8	1.9	D 6.5	8.0	- 2.8	8.0	E 5.9	1.1	X 7.0	1.6	I 1.6	1.5	T 5.9	8.0	3 6.5	1.0	4 7.5	47.4

WESTBOUND
WB STA 2856+33
SERVICES

MODEL:
FILE NAME: G:\FEIdata_2017\17-1213 PTB 185 ITEM 20 FAI 270 OVER MISSISSIPPI RIVER PH II DB HORNER SHIFRIN\CADD\CADD Sheets\D876J90-Int-SignDetails.dgn

FUHRMANN ENGINEERING
WWW. FUHRMANN-ENG .COM

USER NAME = untitled	DESIGNED -	REVISED -	
	DRAWN -	REVISED -	
PLOT SCALE = 0.0833 ' / in.	CHECKED -	REVISED -	
PLOT DATE = 11/12/2021	DATE -	REVISED -	

STATE OF ILLINOIS
DEPARTMENT OF TRANSPORTATION

SIGN DETAILS

SCALE: NTS | SHEET 6 OF 7 SHEETS | STA. TO STA.

F.A.I. RTE.	SECTION	COUNTY	TOTAL SHEETS	SHEET NO.
270	60(B)-1	MADISON	860	171

CONTRACT NO. 76J90

ILLINOIS | FED. AID PROJECT

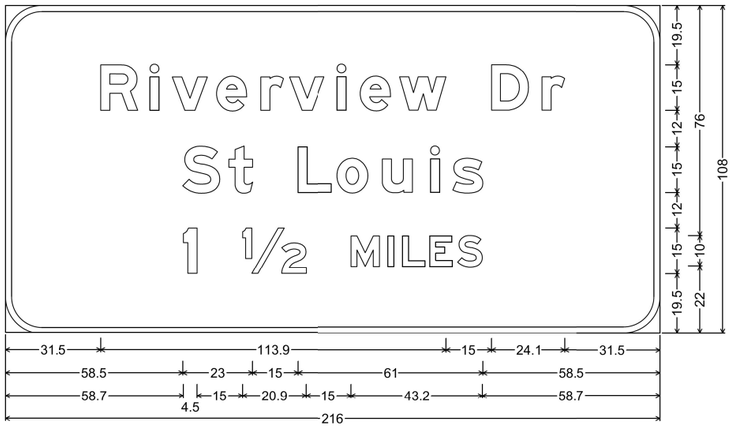

12.0" Radius, 2.0" Border, White on Green;
"Riverview Dr", E Mod 2K; "St Louis", E Mod 2K; "1 ½ MILES", E Mod 2K;
Table of widths and spaces

31.5	R 12.1	4.1	I 3.0	4.3	V 11.6	3.0	G 9.9	4.7	F 7.5	1.9	V 11.6	4.3	I 3.0	4.7	G 9.9	3.0	W 15.3	15.0	D 12.1	4.5	F 7.5	31.5		
58.5	S 12.2	3.0	t 7.8	15.0	L 11.1	1.9	O 10.2	4.7	U 9.9	5.9	I 3.0	4.4	S 9.9	58.5										
58.7	1 4.5	15.0	½ 20.9	15.0	M 9.3	2.8	I 2.0	2.8	L 7.4	1.6	E 7.4	1.8	S 8.1	58.7										

WESTBOUND
WB STA 2863+45
ADVANCE GUIDE

MODEL:
FILE NAME: G:\FEIlidos\ 2017\17-1213 PTB 185 ITEM 20 FAI 270 OVER MISSISSIPPI RIVER PH II 08 HORNER SHIFRIN\CADD\CADD Sheets\D876J90-sht-SignDetails.dgn

FUHRMANN ENGINEERING
WWW. FUHRMANN-ENG .COM

USER NAME = untitled	DESIGNED -	REVISED -
	DRAWN -	REVISED -
PLOT SCALE = 0.0833 ' / in.	CHECKED -	REVISED -
PLOT DATE = 11/12/2021	DATE -	REVISED -

STATE OF ILLINOIS
DEPARTMENT OF TRANSPORTATION

SIGN DETAILS

SCALE: NTS | SHEET 7 OF 7 SHEETS | STA. | TO STA.

F.A.I. RTE.	SECTION	COUNTY	TOTAL SHEETS	SHEET NO.
270	60(B)-1	MADISON	860	172
		CONTRACT NO. 76J90		
		ILLINOIS FED. AID PROJECT		

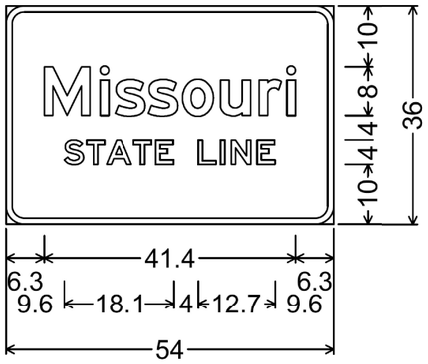

3.0" Radius, 1.0" Border, White on Green;
"Missouri", E 2K;
"STATE LINE", E 2K;
Table of widths and spaces

	M		i		s		s		o		u		r		i		
6.3	7.5	1.8	1.4	1.0	4.9	0.6	4.9	0.7	5.1	1.1	5.0	1.4	3.7	0.9	1.4	6.3	

	S		T		A		T		E
9.6	3.2	0.5	3.0	0.3	4.1	0.3	3.0	0.7	3.0

	L		I		N		E		
4.0	3.0	0.7	0.7	1.0	3.3	1.0	3.0	9.6	

WESTBOUND
EB STA 2809+60
MISSOURI STATE LINE

FUHRMANN ENGINEERING
WWW. FUHRMANN-ENG .COM

USER NAME = untitled	DESIGNED -	REVISED -	
	DRAWN -	REVISED -	
PLOT SCALE = 0.0833 ' / in.	CHECKED -	REVISED -	
PLOT DATE = 11/12/2021	DATE -	REVISED -	

STATE OF ILLINOIS
DEPARTMENT OF TRANSPORTATION

SIGN DETAILS

SCALE: NTS | SHEET 5 OF 7 SHEETS | STA. TO STA.

F.A.I. RTE.	SECTION	COUNTY	TOTAL SHEETS	SHEET NO.
270	60(B)-1	MADISON	860	173
		CONTRACT NO. 76J90		
	ILLINOIS	FED. AID PROJECT		

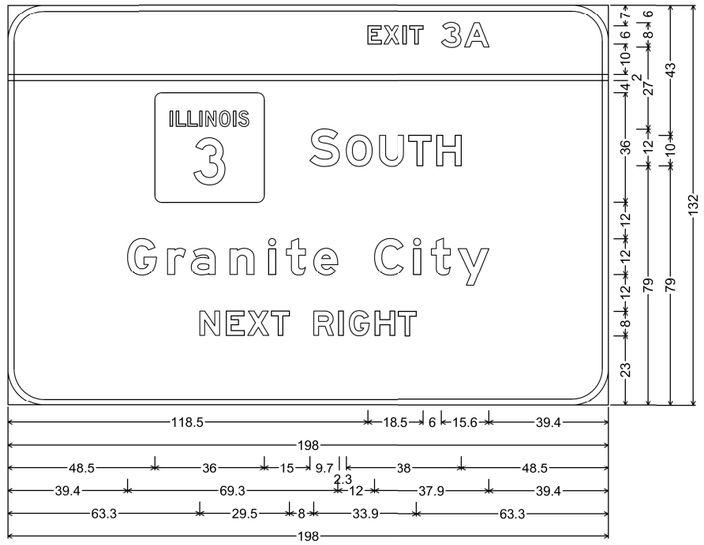

12.0" Radius, 2.0" Border, White on Green;
"EXIT 3A", E Mod 2K; "SOUTH", E Mod 2K; "Granite City", E Mod 2K;
"NEXT RIGHT", E Mod 2K;
Table of widths and spaces

	E		X		I		T		3		A	
118.5	4.4	0.9	5.2	1.2	1.2	1.1	4.5	6.0	6.4	1.2	8.0	39.4

	—	
0.0	198.0	0.0

	3		S		O		U		T		H	
48.5	36.0	15.0	9.7	2.3	8.4	2.4	8.1	1.8	7.4	1.8	8.1	48.5

	G		r		a		n		i		t		e		C		i		t		y	
39.4	9.7	3.6	6.0	1.8	7.9	4.8	7.9	4.8	2.4	3.5	6.2	2.8	7.9	12.0	9.7	3.4	2.4	3.5	6.2	2.5	10.2	39.4

	N		E		X		T		R		I		G		H		T	
63.3	6.5	2.2	5.9	1.1	7.0	0.9	5.9	8.0	6.5	1.7	1.6	1.9	6.5	1.9	6.5	1.4	5.9	63.3

EASTBOUND
EB STA 1900+88
GUIDE

MODEL:
FILE NAME: G:\FEIjobs_2017\17-1213 PTB 185 ITEM 20 FAI 270 OVER MISSISSIPPI RIVER PH II D8 HORNER SHIFRIN\CADD\CADD Sheets\D876J90-sht-SignDetails.dgn

FUHRMANN ENGINEERING
WWW. FUHRMANN-ENG .COM

USER NAME = untitled
PLOT SCALE = 0.0833 ' / in.
PLOT DATE = 11/12/2021

DESIGNED -
DRAWN -
CHECKED -
DATE -

REVISED -
REVISED -
REVISED -
REVISED -

STATE OF ILLINOIS
DEPARTMENT OF TRANSPORTATION

SIGN DETAILS

SCALE: NTS SHEET 4 OF 7 SHEETS STA. TO STA.

F.A.I. RTE.	SECTION	COUNTY	TOTAL SHEETS	SHEET NO.
270	60(B)-1	MADISON	860	174

CONTRACT NO. 76J90
ILLINOIS FED. AID PROJECT

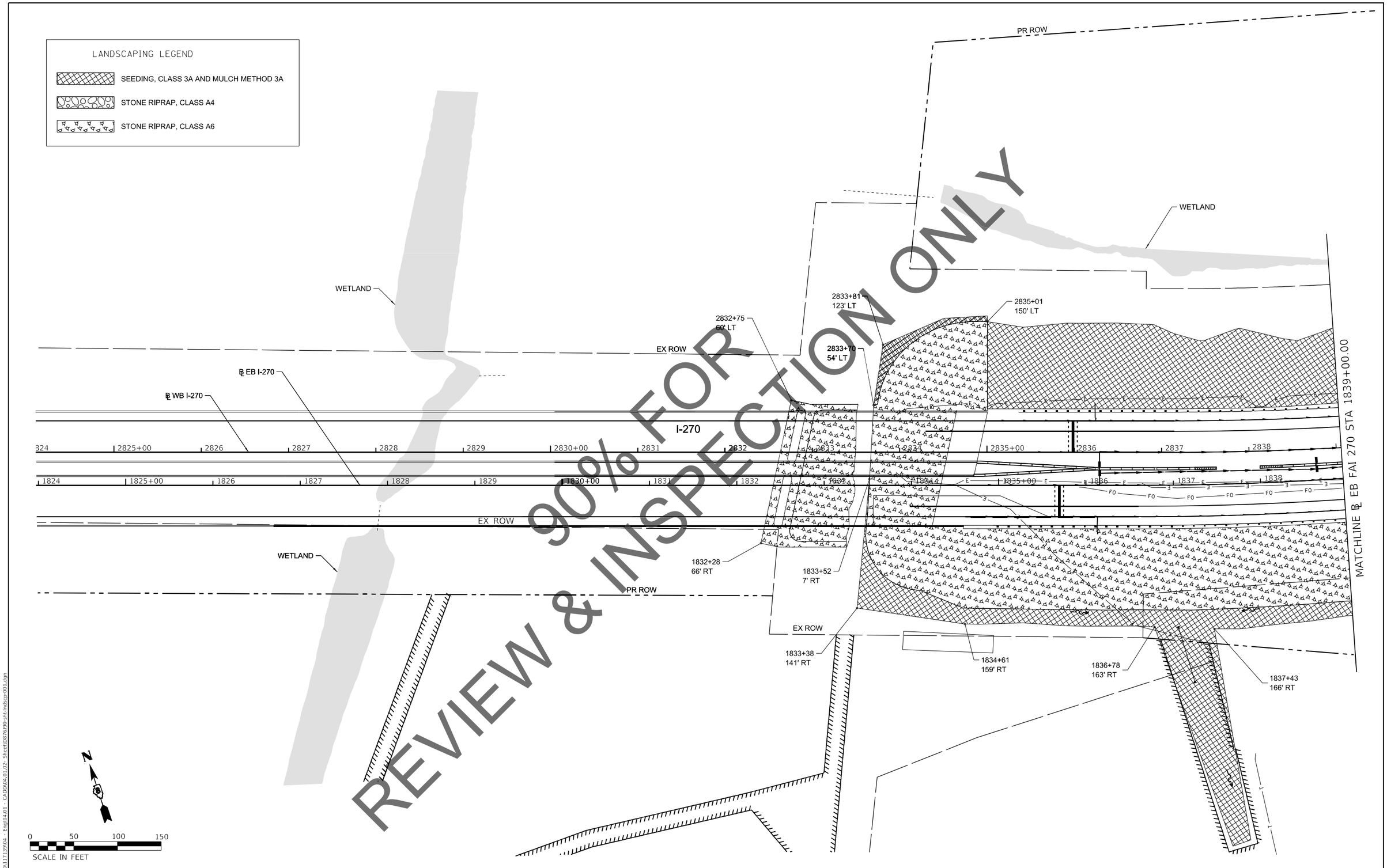

MODEL: Default
FILE NAME: h:\2026\1713904 - Eng\04.01 - CADD\04.01\02- Sheet\D876\09-sht-lndscp-001.dgn

AMERICAN SURVEYING & ENGINEERING, P.C. SURVEYORS•ENGINEERS GEODESISTS•MAPPING SCIENTISTS	USER NAME = colwellj	DESIGNED - JM	REVISED -	STATE OF ILLINOIS DEPARTMENT OF TRANSPORTATION	FAI–270 LANDSCAPING	F.A.I. RTE.	SECTION	COUNTY	TOTAL SHEETS	SHEET NO.
		DRAWN - JM	REVISED -			270	60(B)-1	MADISON	860	175
	PLOT SCALE = 50.0000 ' / in.	CHECKED - JC	REVISED -					CONTRACT NO. 76J90		
	PLOT DATE = 11/18/2021	DATE - 11/18/21	REVISED -		SCALE: 1" = 50' SHEET 1 OF 6 SHEETS STA. 1824+00.00 TO STA. 1839+00.00			ILLINOIS FED. AID PROJECT		

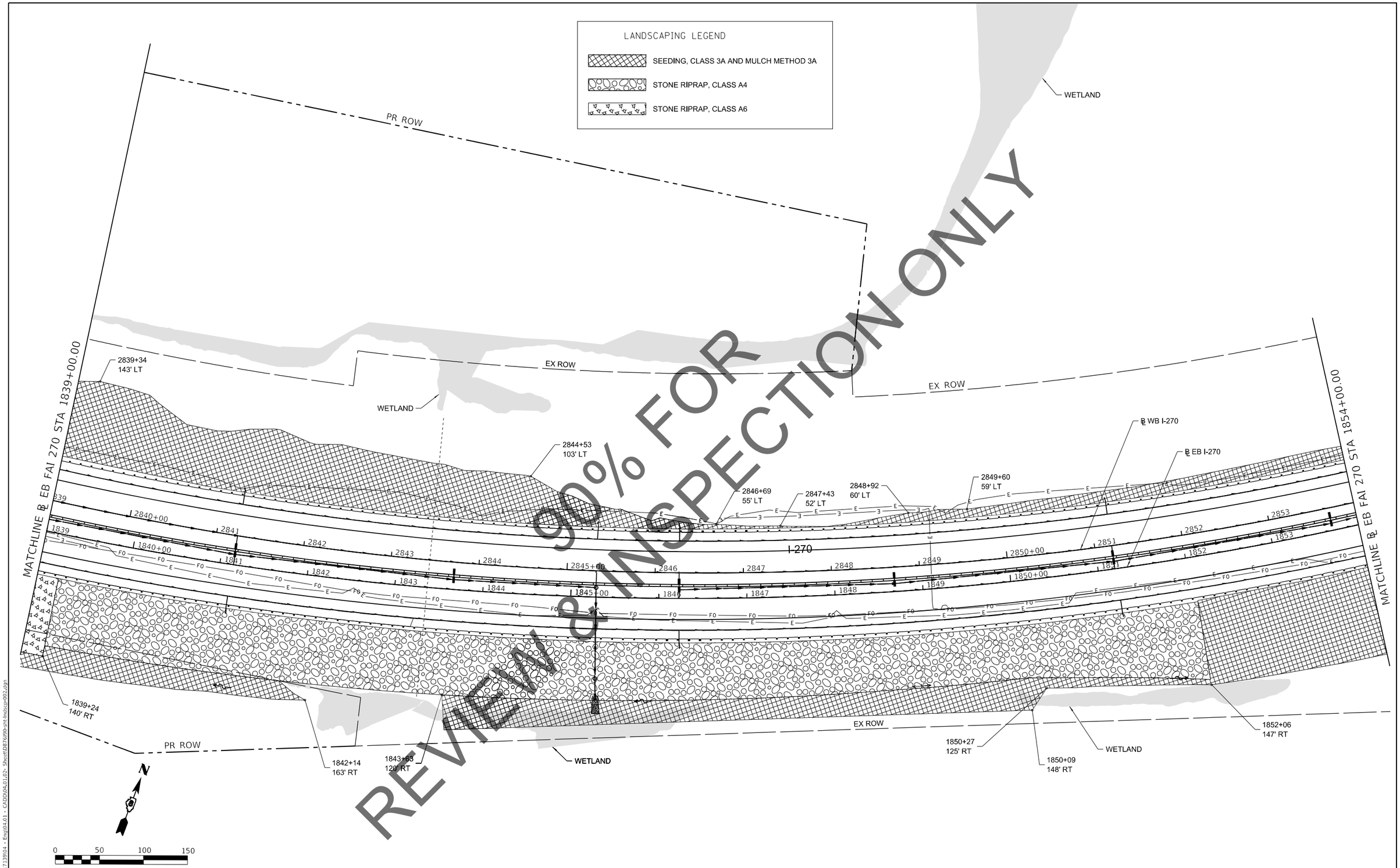

MODEL: Default
FILE NAME: h:\2020\1171390\4 - Eng\04.01 - CADD\04.01.02- Sheet\D876\99-sht-lndscp-002.dgn

AMERICAN SURVEYING & ENGINEERING, P.C. SURVEYORS•ENGINEERS GEODESISTS•MAPPING SCIENTISTS

USER NAME = colwellj	DESIGNED - JM	REVISED -	
	DRAWN - JM	REVISED -	
PLOT SCALE = 50.0000 ' / in.	CHECKED - JC	REVISED -	
PLOT DATE = 11/18/2021	DATE - 11/18/21	REVISED -	

STATE OF ILLINOIS
DEPARTMENT OF TRANSPORTATION

FAI–270
LANDSCAPING

SCALE: 1" = 50' | SHEET 2 OF 6 SHEETS | STA. 1839+00.00 TO STA. 1854+00.00

F.A.I. RTE.	SECTION	COUNTY	TOTAL SHEETS	SHEET NO.
270	60(B)-1	MADISON	860	176
		CONTRACT NO. 76J90		
		ILLINOIS	FED. AID PROJECT	

LANDSCAPING LEGEND

- SEEDING, CLASS 3A AND MULCH METHOD 3A
- STONE RIPRAP, CLASS A4
- STONE RIPRAP, CLASS A6

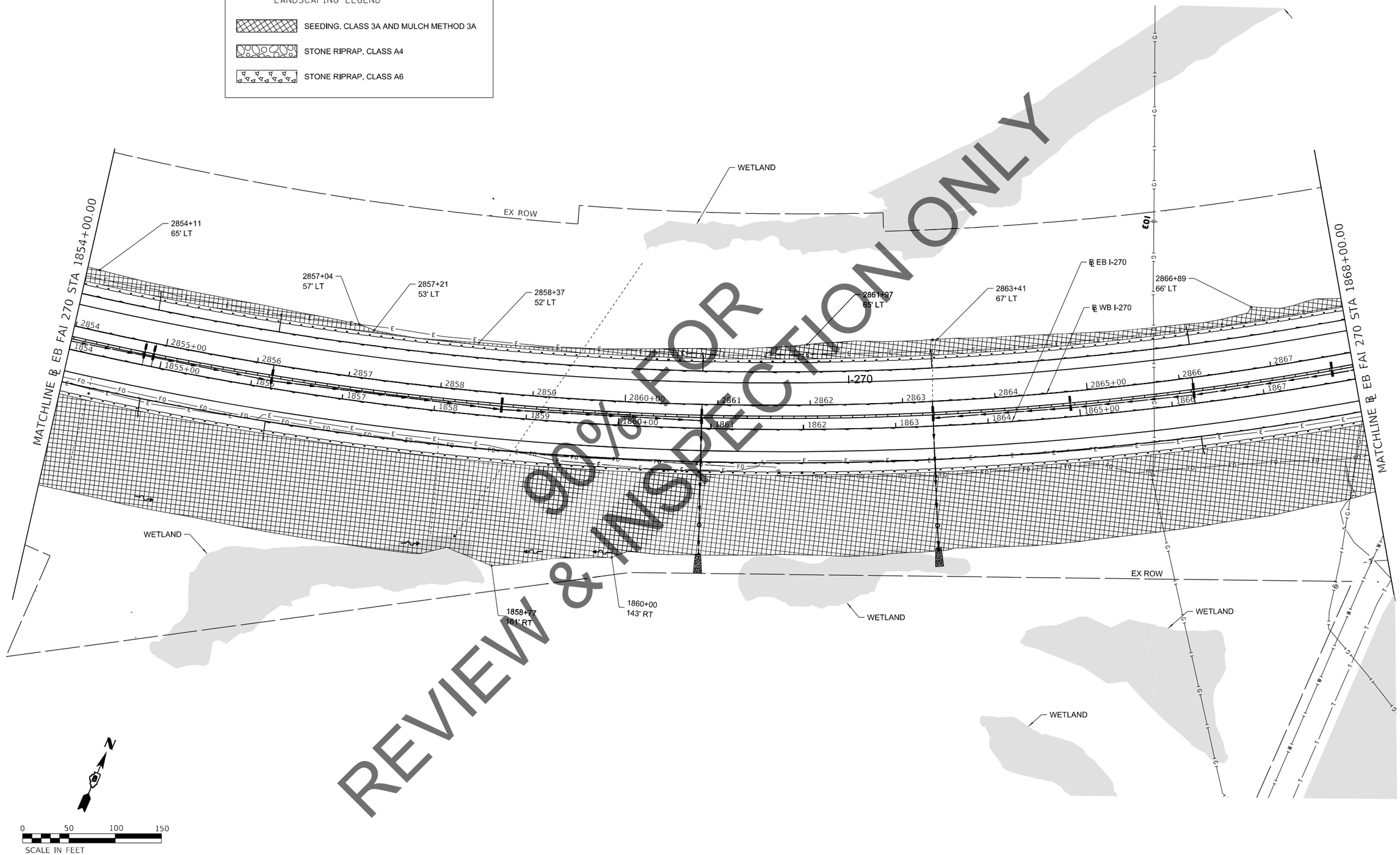

MODEL: Default
FILE NAME: H:\2020\1171390\4 - Eng\04.01 - CADD\04.01.02- Sheet\D876J99-sht-Indlscp-003.dgn

AMERICAN
SURVEYING & ENGINEERING, P.C.
SURVEYORS•ENGINEERS
GEODESISTS•MAPPING SCIENTISTS

USER NAME = colwellj	DESIGNED - JM	REVISED -	
	DRAWN - JM	REVISED -	
PLOT SCALE = 50.0000 ' / in.	CHECKED - JC	REVISED -	
PLOT DATE = 11/18/2021	DATE - 11/18/21	REVISED -	

STATE OF ILLINOIS
DEPARTMENT OF TRANSPORTATION

FAI–270
LANDSCAPING

SCALE: 1" = 50' | SHEET 3 OF 6 SHEETS | STA. 1854+00.00 TO STA. 1868+00.00

F.A.I. RTE.	SECTION	COUNTY	TOTAL SHEETS	SHEET NO.
270	60(B)-1	MADISON	860	177

CONTRACT NO. 76J90

ILLINOIS | FED. AID PROJECT

LANDSCAPING LEGEND

- SEEDING, CLASS 3A AND MULCH METHOD 3A
- STONE RIPRAP, CLASS A4
- STONE RIPRAP, CLASS A6

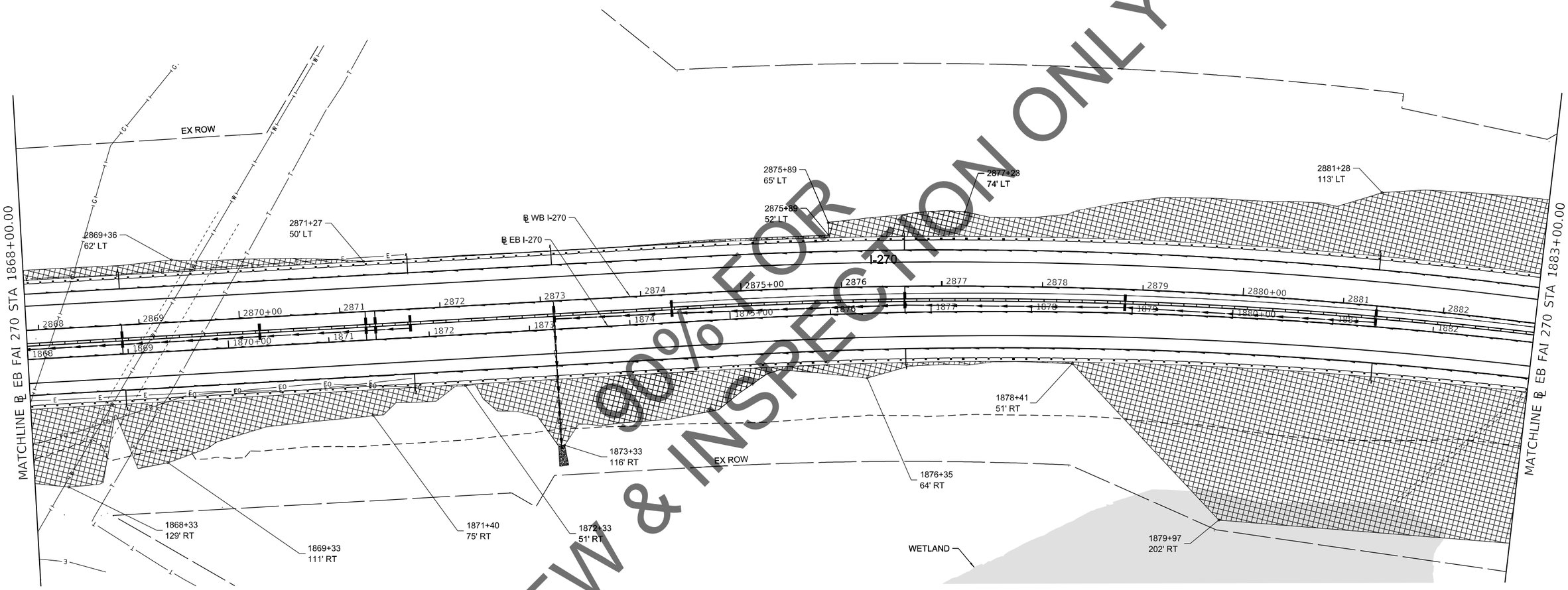

N

0 50 100 150
SCALE IN FEET

MODEL: Default
FILE NAME: h:\2020\1171390\4 - Eng\04.01 - CADD\04.01.02- Sheet\D876199-sht-lndscp-004.dgn

AMERICAN
SURVEYING & ENGINEERING, P.C.
SURVEYORS•ENGINEERS
GEODESISTS•MAPPING SCIENTISTS

USER NAME = colwellj	DESIGNED - JM	REVISED -	
	DRAWN - JM	REVISED -	
PLOT SCALE = 50.0000 ' / in.	CHECKED - JC	REVISED -	
PLOT DATE = 11/18/2021	DATE - 11/18/21	REVISED -	

STATE OF ILLINOIS
DEPARTMENT OF TRANSPORTATION

FAI–270
LANDSCAPING

SCALE: 1" = 50' | SHEET 4 OF 6 SHEETS | STA. 1868+00.00 TO STA. 1883+00.00

F.A.I. RTE.	SECTION	COUNTY	TOTAL SHEETS	SHEET NO.
270	60(B)-1	MADISON	860	178
		CONTRACT NO. 76J90		
		ILLINOIS	FED. AID PROJECT	

LANDSCAPING LEGEND

- SEEDING, CLASS 3A AND MULCH METHOD 3A
- STONE RIPRAP, CLASS A4
- STONE RIPRAP, CLASS A6

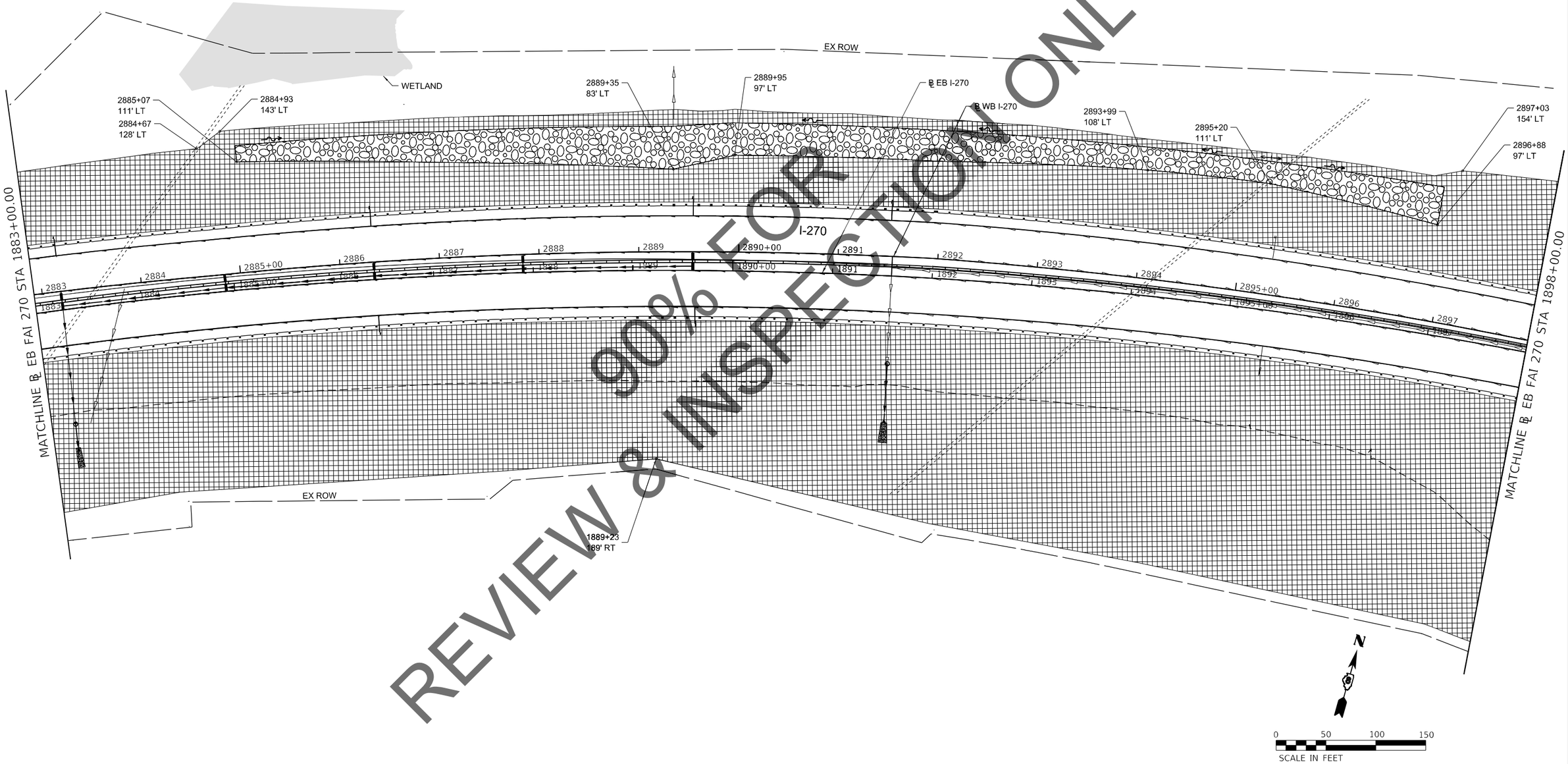

MODEL: Default
FILE NAME: h:\2020\1173904 - Eng\04.01 - CADD\04.01.02- Sheet\D876J90-sht-lndscp-005.dgn

AMERICAN SURVEYING & ENGINEERING, P.C. SURVEYORS•ENGINEERS GEODESISTS•MAPPING SCIENTISTS	USER NAME = colwellj	DESIGNED - JM	REVISED -	STATE OF ILLINOIS DEPARTMENT OF TRANSPORTATION	FAI–270 LANDSCAPING
		DRAWN - JM	REVISED -		
	PLOT SCALE = 50.0000 ' / in.	CHECKED - JC	REVISED -		
	PLOT DATE = 11/18/2021	DATE - 11/18/21	REVISED -		SCALE: 1" = 50' SHEET 5 OF 6 SHEETS STA. 1883+00.00 TO STA. 1898+00.00

F.A.I. RTE.	SECTION	COUNTY	TOTAL SHEETS	SHEET NO.
270	60(B)-1	MADISON	860	179
		CONTRACT NO. 76J90		
		ILLINOIS	FED. AID PROJECT	

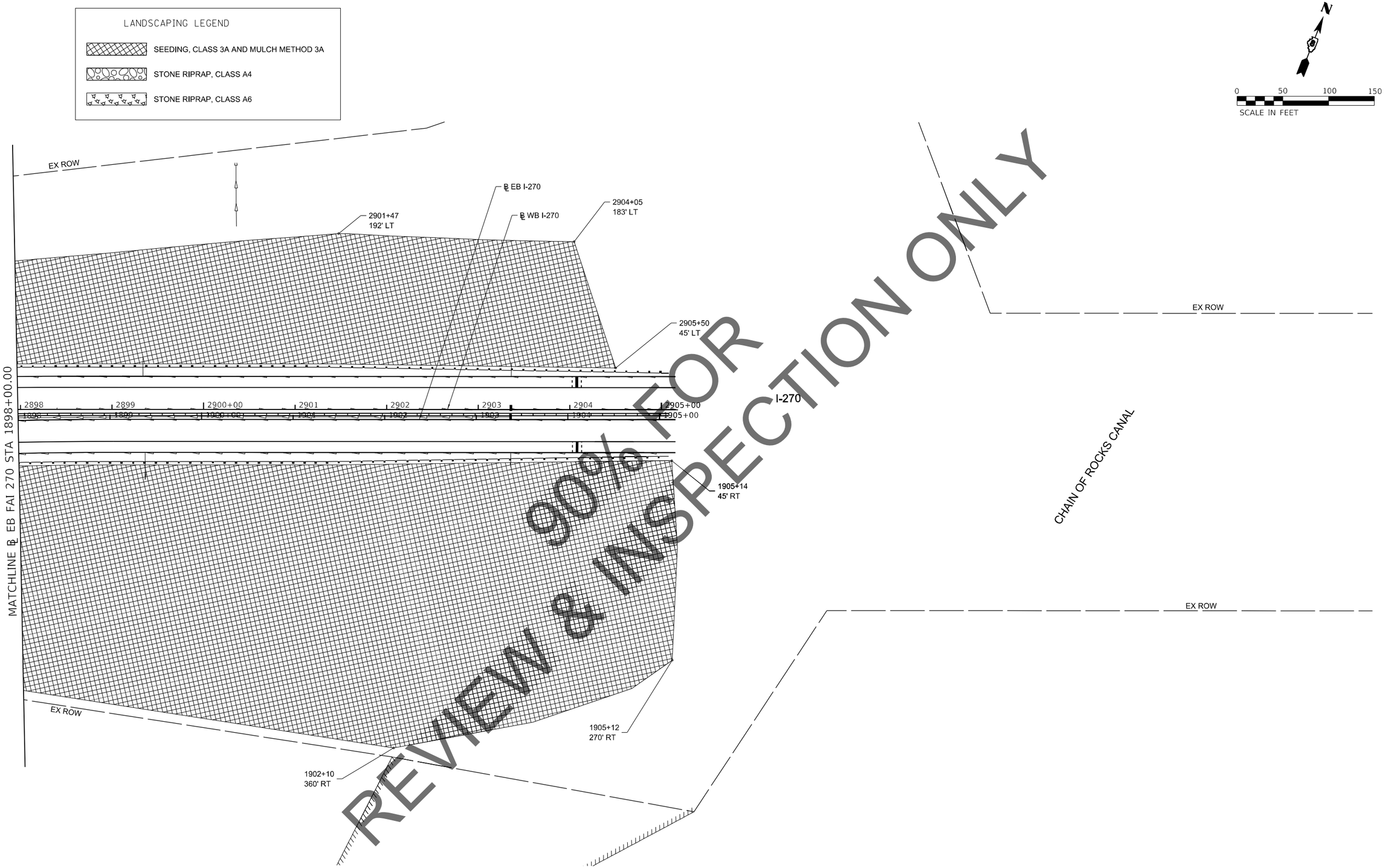

MODEL: Default
FILE NAME: H:\2020\1171390\4 - Eng\04.01 - CADD\04.01\02- Sheet\D876J90-sht-hsl\sc-p06.dgn

AMERICAN
SURVEYING & ENGINEERING, P.C.
SURVEYORS•ENGINEERS
GEODESISTS•MAPPING SCIENTISTS

USER NAME = colwellj	DESIGNED - JM	REVISED -
	DRAWN - JM	REVISED -
PLOT SCALE = 50.0000 ' / in.	CHECKED - JC	REVISED -
PLOT DATE = 11/18/2021	DATE - 11/18/21	REVISED -

STATE OF ILLINOIS
DEPARTMENT OF TRANSPORTATION

FAI–270
LANDSCAPING

SCALE: 1" = 50' | SHEET 6 OF 6 SHEETS | STA. 1898+00.00 TO STA. 1913+00.00

F.A.I. RTE.	SECTION	COUNTY	TOTAL SHEETS	SHEET NO.
270	60(B)-1	MADISON	860	180

CONTRACT NO. 76J90

ILLINOIS | FED. AID PROJECT

LIGHTING NOTES:

1. THE CONTRACTOR SHALL VERIFY ALL OF THE INFORMATION SHOWN IN THE CONTRACT DRAWINGS WHICH AFFECT THE WORK UNDER THIS CONTRACT.

2. IT IS THE RESPONSIBILITY OF THE CONTRACTOR TO ASCERTAIN EXISTING FIELD CONDITIONS BEFORE BIDDING ON THE PROJECT.

3. ALL NEW CONDUITS, UNIT DUCTS, DIRECT BURIAL CABLES. AND APPURTENANCES ARE INDICATED DIAGRAMMATICALLY ON THE DRAWINGS. THE ACTUAL LOCATIONS IN THE FIELD SHALL MEET THE APPROVAL OF THE ENGINEER.

4. THE ELECTRICAL WORK SHALL BE PERFORMED IN ACCORDANCE WITH THE IDOT STANDARD SPECIFICATIONS FOR ROAD AND BRIDGE CONSTRUCTION AND ASSOCIATED SUPPLEMENTAL SPECIFICATIONS AND RECURRING SPECIAL PROVISIONS (LATEST EDITION).

5. ALL LUMINAIRES SHALL BE ORIENTED WITH THE OPTICS PERPENDICULAR TO THE ROADWAY UNLESS OTHERWISE INDICATED OR DIRECTED BY THE ENGINEER. THIS WORK SHALL BE CONSIDERED INCLUDED IN THE APPLICABLE PAY ITEMS. SEPARATE PAYMENT WILL NOT BE MADE.

6. CONDUIT DUCTS SHALL BE INSTALLED AT A MINIMUM 30" DEPTH BELOW GRADE AND POSITIONED IN THE FIELD TO AVOID CONFLICT WITH ROADWAY UNDERDRAINS AND OTHER EXISTING AND PROPOSED UTILITIES. THE CONTRACTOR SHALL INCREASE DEPTH OF UNIT DUCT AND CONDUIT AS REQUIRED AT NO ADDITIONAL COST. THE CONTRACTOR SHALL COORDINATE RACEWAY DEPTH WITH THE ELECTRICAL DETAILS AND THE ENGINEER.

7. WHERE THE CONTRACTOR'S EXCAVATION MEETS AN OBSTRUCTION, THE CONTRACTOR SHALL NOTIFY THE ENGINEER FOR DIRECTION IN WRITING PRIOR TO EXCAVATION. IF DAMAGE OCCURS, THE CONTRACTOR SHALL RESTORE THE DAMAGE TO EXISTING SYSTEMS OR UTILITIES AND REMOVE EXISTING OBSTRUCTIONS AND FOUNDATIONS TO THE SATISFACTION OF THE ENGINEER. THIS WORK SHALL BE CONSIDERED INCLUDED IN THE COST OF THE APPROPRIATE PAY ITEM.

8. ALL THE FOUNDATIONS SHALL INCLUDE A GROUND ROD PER STANDARD DETAIL BE-300 AND STANDARD SPECIFICATION SECTION 806. GROUND ROD SHALL BE INCLUDED IN THE COST OF THE POLE FOUNDATION PAY ITEM.

<u>LIGHTING SEQUENCE FOR MOT PHASES</u>

PHASE 0:

1. NO LIGHTING WORK.

PHASE 1A:

1. NO LIGHTING WORK.

PHASE 1B:

1. INSTALL NEW LIGHTING ON NEW EASTBOUND I-270 BRIDGE.

PHASE 1C:

1. INSTALL NEW LIGHTING ALONG EASTBOUND I-270.
2. REMOVE EXISTING LIGHTING ALONG EAST BOUND I-270 WHEN NEW LIGHTING IS OPERATIVE.

PHASE 1D:

1. NO LIGHTING WORK.

PHASE 2A:

1. REMOVE EXISTING LIGHTING ON OLD I-270 BRIDGE.
2. INSTALL NEW LIGHTING ON NEW WESTBOUND I-270 BRIDGE.
3. INSTALL NEW LIGHTING ALONG WEST BOUND I-270.
4. REMOVE EXISTING LIGHTING ALONG WEST BOUND I-270 WHEN NEW LIGHTING IS OPERATIVE.

PHASE 2B:

1. NO LIGHTING WORK.

PHASE 2C:

1. NO LIGHTING WORK

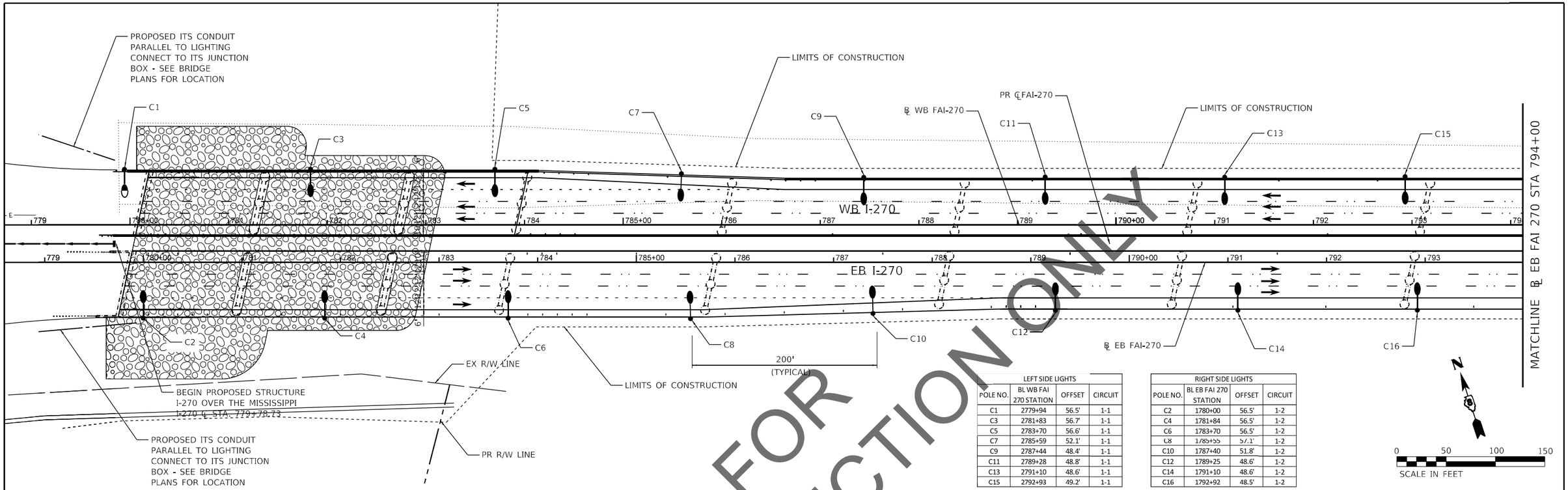

LEFT SIDE LIGHTS			
POLE NO.	BL WB FAI 270 STATION	OFFSET	CIRCUIT
C1	2779+94	56.5'	1-1
C3	2781+83	56.7'	1-1
C5	2783+70	56.6'	1-1
C7	2785+59	52.1'	1-1
C9	2787+44	48.4'	1-1
C11	2789+28	48.8'	1-1
C13	2791+10	48.6'	1-1
C15	2792+93	49.2'	1-1

RIGHT SIDE LIGHTS			
POLE NO.	BL EB FAI 270 STATION	OFFSET	CIRCUIT
C2	1780+00	56.5'	1-2
C4	1781+84	56.5'	1-2
C6	1783+70	56.5'	1-2
C8	1785+55	57.1'	1-2
C10	1787+40	51.8'	1-2
C12	1789+25	48.6'	1-2
C14	1791+10	48.6'	1-2
C16	1792+92	48.5'	1-2

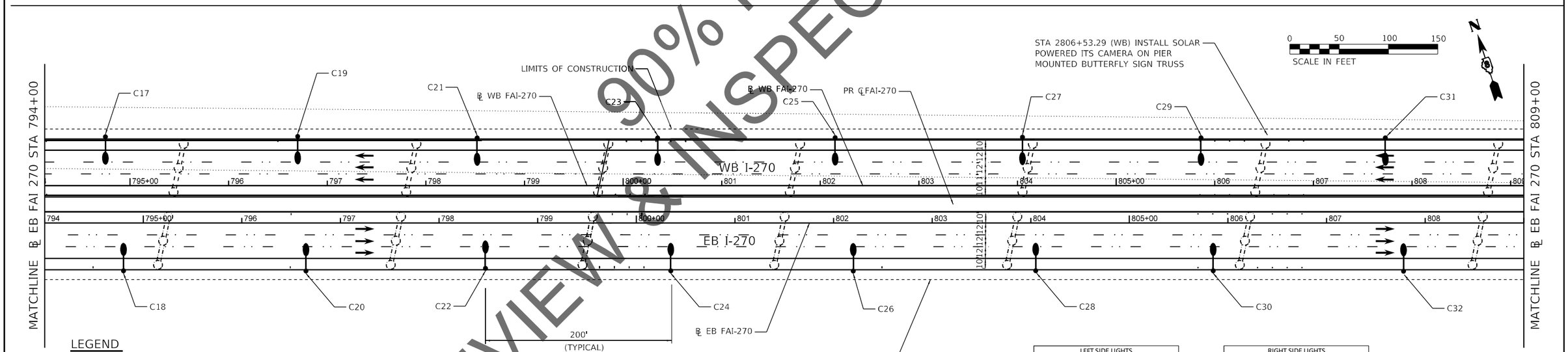

LEGEND

- EXISTING ELECTRIC SERVICE INSTALLATION, 240/480V, 1 PHASE
- EXISTING LIGHTING CONTROLLER, 100 AMP, 240/480V, 1 PHASE
- PROPOSED HANDHOLE
- PROPOSED LIGHTING UNIT, 45' MOUNTING HEIGHT, LUMINAIRE LED, MOUNTED ON 15/ DAVIT ARM ATTACHED TO BRIDGE PARAPET
- PROPOSED LIGHTING UNIT, 50' MOUNTING HEIGHT, LUMINAIRE LED, ROADWAY ON 15' DAVIT ARM, 15" BOLT CIRCLE, AND 24" FOUNDATION

LEFT SIDE LIGHTS			
POLE NO.	BL WB FAI 270 STATION	OFFSET	CIRCUIT
C17	2794+75	49.6'	1-1
C19	2796+70	49.9'	1-1
C21	2798+52	48.5'	1-1
C23	2800+35	48.4'	1-1
C25	2802+15	48.7'	1-1
C27	2804+05	49.2'	1-1
C29	2805+86	48.5'	1-1
C31	2807+73	48.6'	1-1

RIGHT SIDE LIGHTS			
POLE NO.	BL EB FAI 270 STATION	OFFSET	CIRCUIT
C18	1794+80	48.5'	1-2
C20	1796+65	48.7'	1-2
C22	1798+47	46.0'	1-2
C24	1800+35	48.5'	1-2
C26	1802+20	48.7'	1-2
C28	1804+05	48.4'	1-2
C30	1805+85	48.5'	1-2
C32	1807+78	48.9'	1-2

MODEL: Default
FILE NAME: I:\2017\6057\Cadd\Design\D876J90-sht-light-001.dgn

ABNA

USER NAME = mconroy	DESIGNED - FPE	REVISED -	
	DRAWN - MJC	REVISED -	
PLOT SCALE = 50.0000 ' / in.	CHECKED - JMO	REVISED -	
PLOT DATE = 11/17/2021	DATE - 10/29/2021	REVISED -	

STATE OF ILLINOIS
DEPARTMENT OF TRANSPORTATION

FAI–270
PROPOSED ITS AND LIGHTING

SCALE: 1" = 50' | SHEET 1 OF 5 SHEETS | STA. 779+00.00 TO STA. 809+00.00

F.A.I. RTE.	SECTION	COUNTY	TOTAL SHEETS	SHEET NO.
270	60(B)-1	MADISON	860	182

CONTRACT NO. 76J90

ILLINOIS | FED. AID PROJECT

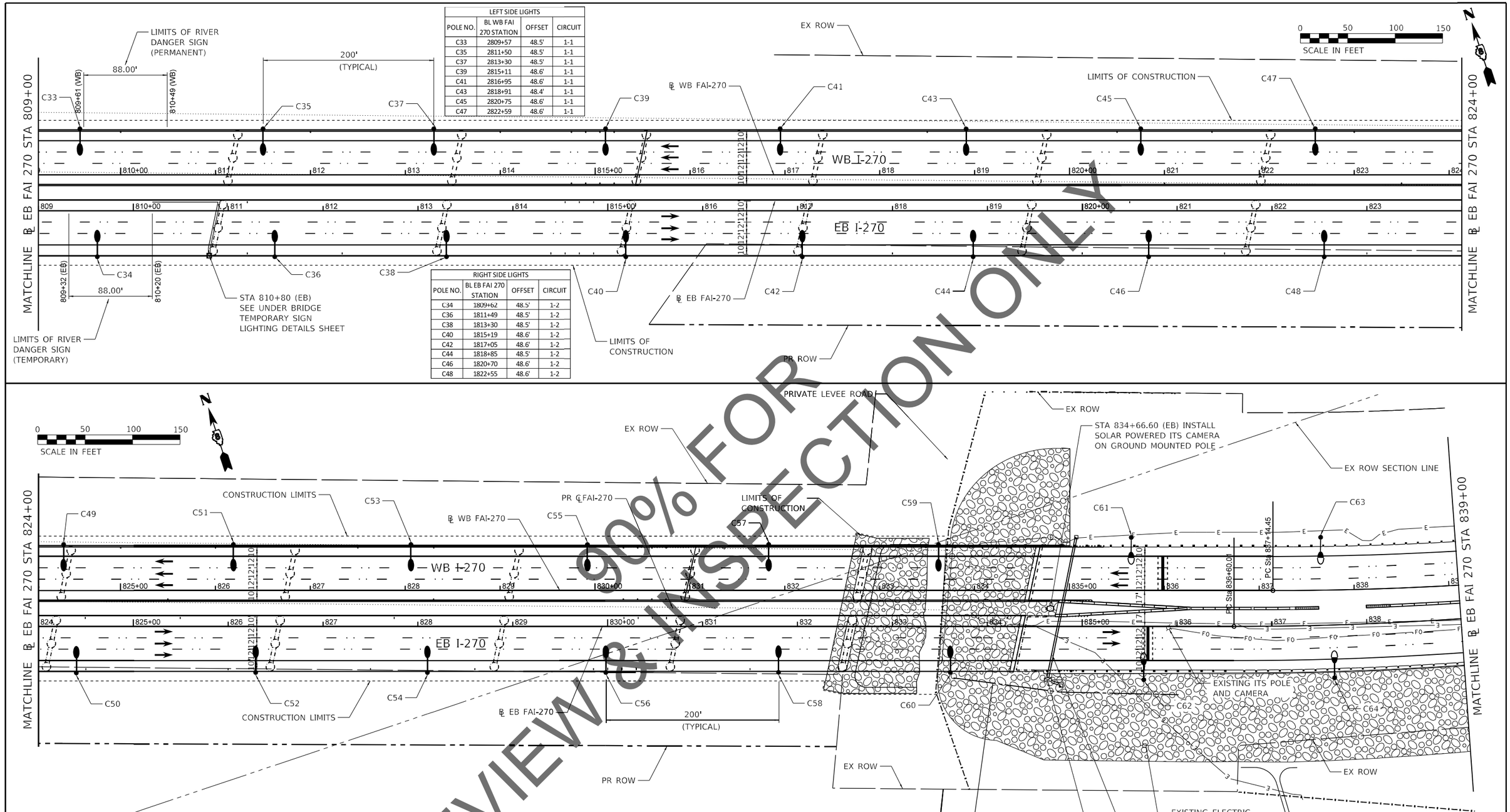

LEFT SIDE LIGHTS			
POLE NO.	BL WB FAI 270 STATION	OFFSET	CIRCUIT
C33	2809+57	48.5'	1-1
C35	2811+50	48.5'	1-1
C37	2813+30	48.5'	1-1
C39	2815+11	48.6'	1-1
C41	2816+95	48.6'	1-1
C43	2818+91	48.4'	1-1
C45	2820+75	48.6'	1-1
C47	2822+59	48.6'	1-1

RIGHT SIDE LIGHTS			
POLE NO.	BL EB FAI 270 STATION	OFFSET	CIRCUIT
C34	1809+62	48.5'	1-2
C36	1811+49	48.5'	1-2
C38	1813+30	48.5'	1-2
C40	1815+19	48.6'	1-2
C42	1817+05	48.6'	1-2
C44	1818+85	48.5'	1-2
C46	1820+70	48.6'	1-2
C48	1822+55	48.6'	1-2

LEGEND

- EXISTING ELECTRIC SERVICE INSTALLATION, 240/480V, 1 PHASE
- EXISTING LIGHTING CONTROLLER, 100 AMP, 240/480V, 1 PHASE
- PROPOSED HANDHOLE
- PROPOSED LIGHTING UNIT, 45' MOUNTING HEIGHT, LUMINAIRE LED, MOUNTED ON 15/ DAVIT ARM ATTACHED TO BRIDGE PARAPET
- PROPOSED LIGHTING UNIT, 50' MOUNTING HEIGHT, LUMINAIRE LED, ROADWAY ON 15' DAVIT ARM, 15" BOLT CIRCLE, AND 24" FOUNDATION

LEFT SIDE LIGHTS			
POLE NO.	BL WB FAI 270 STATION	OFFSET	CIRCUIT
C49	2824+40	48.5'	1-1
C51	2826+19	48.6'	1-1
C53	2828+06	48.5'	1-1
C55	2829+92	48.5'	1-1
C57	2831+83	48.5'	1-1
C59	2833+62	48.4'	1-1
C61	2835+65	56.0'	1-3
C63	2837+66	55.8'	1-3

RIGHT SIDE LIGHTS			
POLE NO.	BL EB FAI 270 STATION	OFFSET	CIRCUIT
C50	1824+40	49.0'	1-2
C52	1826+29	48.5'	1-2
C54	1828+10	48.5'	1-2
C56	1829+98	48.5'	1-2
C58	1831+80	48.5'	1-2
C60	1833+61	48.5'	1-2
C62	1835+65	56.2'	1-4
C64	1837+64	55.7'	1-4

MODEL: Default
FILE NAME: I:\2017\6057\Cadd\Design\D876J90-sht-light-s02.dgn

ABNA

USER NAME = mconroy	DESIGNED - FPE	REVISED -	
	DRAWN - MJC	REVISED -	
PLOT SCALE = 50.0000 ' / in.	CHECKED - JMO	REVISED -	
PLOT DATE = 11/17/2021	DATE - 10/29/2021	REVISED -	

STATE OF ILLINOIS
DEPARTMENT OF TRANSPORTATION

FAI–270
PROPOSED ITS AND LIGHTING

SCALE: 1" = 50' | SHEET 2 OF 5 SHEETS | STA. 809+00.00 TO STA. 839+00.00

F.A.I. RTE.	SECTION	COUNTY	TOTAL SHEETS	SHEET NO.
270	60(B)-1	MADISON	860	183

CONTRACT NO. 76J90
ILLINOIS | FED. AID PROJECT

LEFT SIDE LIGHTS			
POLE NO.	BL WB FAI 270 STATION	OFFSET	CIRCUIT
C65	2839+65	55.7'	1-3
C67	2841+66	56.2'	1-3
C69	2843+66	55.4'	1-3
C71	2845+66	56.0'	1-3
C73	2847+66	56.3'	1-3
C75	2849+66	56.1'	1-3
C77	2851+66	56.0'	1-3
C79	2853+66	56.2'	1-3

RIGHT SIDE LIGHTS			
POLE NO.	BL EB FAI 270 STATION	OFFSET	CIRCUIT
C66	1839+65	56.1'	1-4
C68	1841+65	56.2'	1-4
C70	1843+65	56.0'	1-4
C72	1845+65	55.8'	1-4
C74	1847+65	56.1'	1-4
C76	1849+64	56.6'	1-4
C78	1851+64	56.1'	1-4
C80	853+65	56.3'	1-4

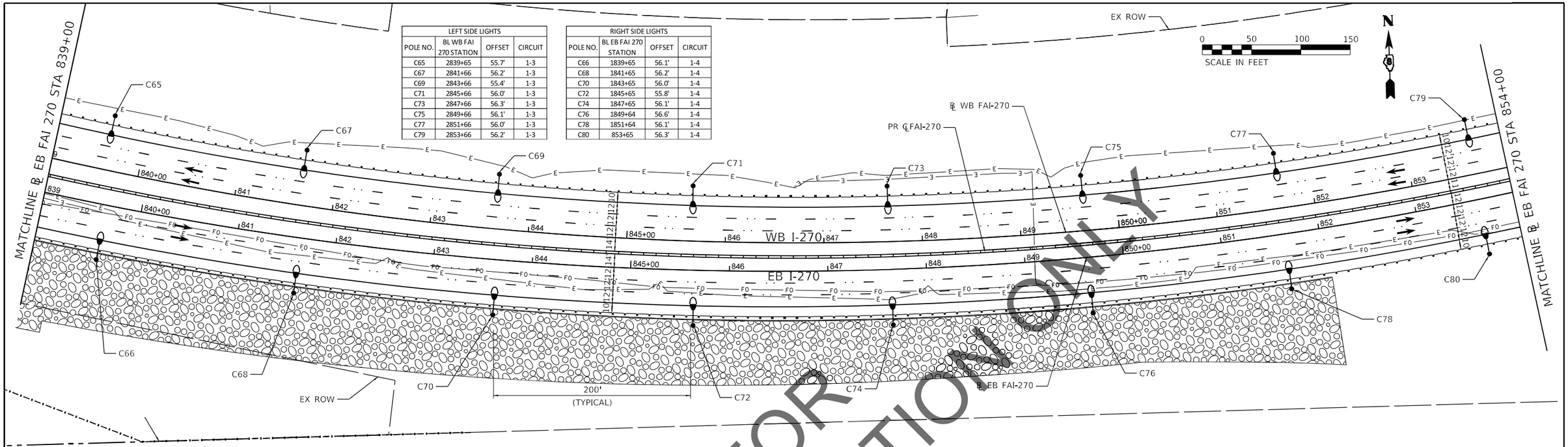

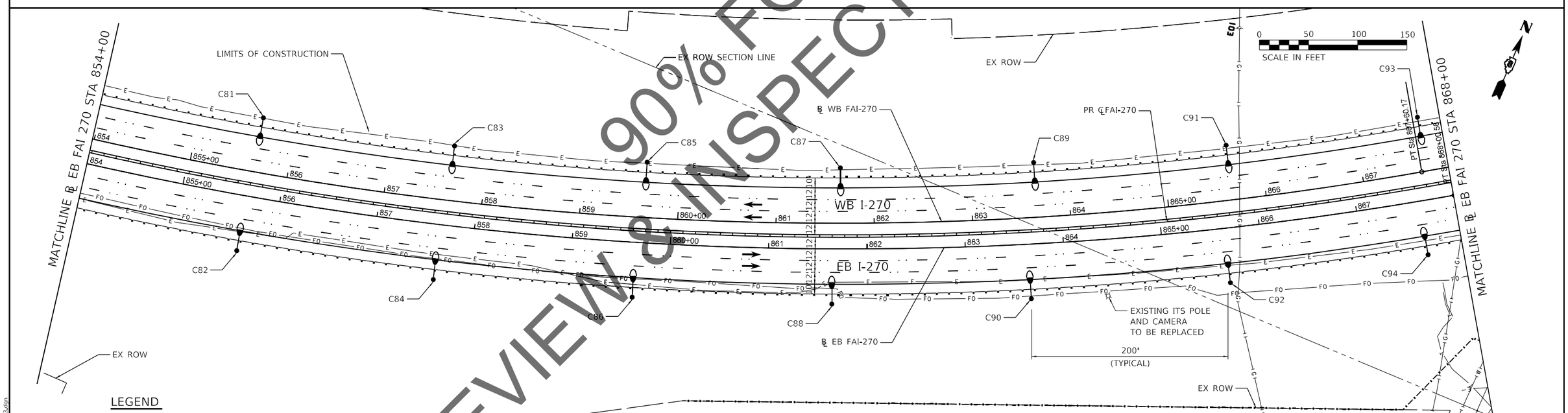

LEGEND

- EXISTING ELECTRIC SERVICE INSTALLATION, 240/480V, 1 PHASE
- EXISTING LIGHTING CONTROLLER, 100 AMP, 240/480V, 1 PHASE
- PROPOSED HANDHOLE
- PROPOSED LIGHTING UNIT, 45' MOUNTING HEIGHT, LUMINAIRE LED, MOUNTED ON 15/ DAVIT ARM ATTACHED TO BRIDGE PARAPET
- PROPOSED LIGHTING UNIT, 50' MOUNTING HEIGHT, LUMINAIRE LED, ROADWAY ON 15' DAVIT ARM, 15" BOLT CIRCLE, AND 24" FOUNDATION

LEFT SIDE LIGHTS			
POLE NO.	BL WB FAI 270 STATION	OFFSET	CIRCUIT
C81	2855+65	55.7'	1-3
C83	2857+66	55.8'	1-3
C85	2859+66	56.5'	1-3
C87	2861+66	56.3'	1-3
C89	2863+66	55.9'	1-3
C91	2865+66	56.0'	1-3
C93	2867+65	55.6'	1-3

RIGHT SIDE LIGHTS			
POLE NO.	BL EB FAI 270 STATION	OFFSET	CIRCUIT
C82	1855+66	56.6'	1-4
C84	1857+65	56.3'	1-4
C86	1859+65	56.0'	1-4
C88	1861+65	56.2'	1-4
C90	1863+65	55.6'	1-4
C92	1865+65	55.7'	1-4
C94	1867+65	55.2'	1-4

MODEL: Default
FILE NAME: I:\2017\6057\Cadd\Design\D876\90-sht-light-t03.dgn

ABNA

USER NAME = mconroy	DESIGNED - FPE	REVISED -	
	DRAWN - MJC	REVISED -	
PLOT SCALE = 50.0004 ' / in.	CHECKED - JMO	REVISED -	
PLOT DATE = 11/17/2021	DATE - 10/29/2021	REVISED -	

STATE OF ILLINOIS
DEPARTMENT OF TRANSPORTATION

FAI–270
PROPOSED ITS AND LIGHTING

SCALE: 1" = 50' | SHEET 3 OF 5 SHEETS | STA. 839+00.00 TO STA. 868+00.00

F.A.I. RTE.	SECTION	COUNTY	TOTAL SHEETS	SHEET NO.
270	60(B)-1	MADISON	860	184

CONTRACT NO. 76J90

ILLINOIS | FED. AID PROJECT

LEFT SIDE LIGHTS			
POLE NO.	BL WB FAI 270 STATION	OFFSET	CIRCUIT
C95	2869+65	56.1'	1-3
C97	2871+65	56.0'	2-1
C99	2873+65	55.9'	2-1
C101	2875+65	55.8'	2-1
C103	2877+65	56.0'	2-1
C105	2879+65	55.8'	2-1
C107	2881+65	56.3'	2-1

RIGHT SIDE LIGHTS			
POLE NO.	BL EB FAI 270 STATION	OFFSET	CIRCUIT
C96	1869+65	55.9'	1-4
C98	1871+65	55.7'	2-2
C100	1873+65	56.0'	2-1
C102	1875+65	56.1'	2-2
C104	1877+66	56.0'	2-2
C106	1879+65	56.1'	2-2
C108	1881+65	56.1'	2-2

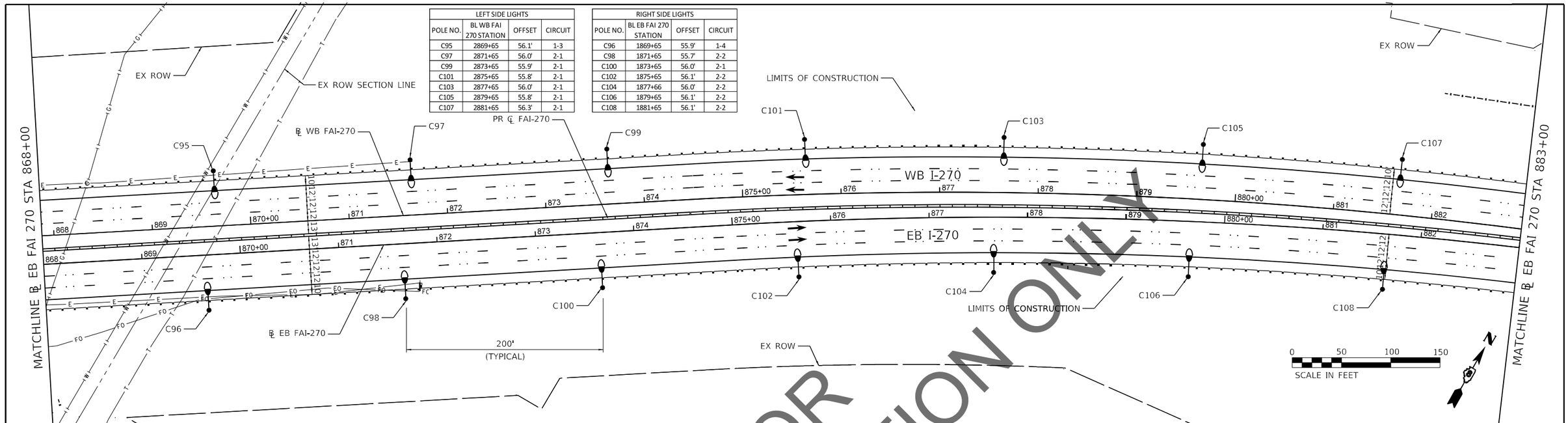

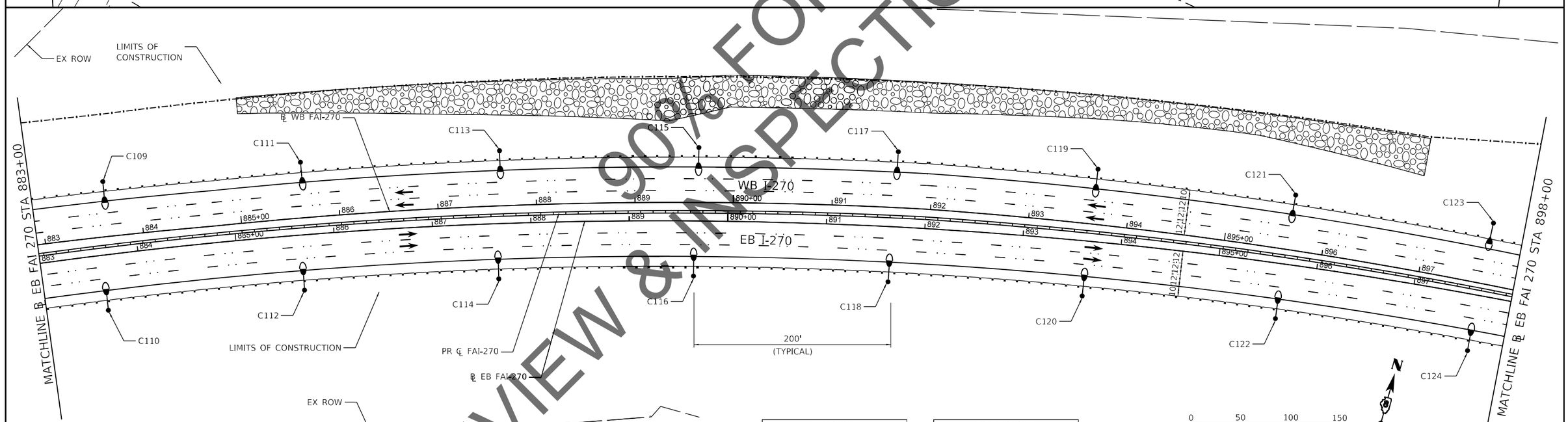

LEFT SIDE LIGHTS			
POLE NO.	BL WB FAI 270 STATION	OFFSET	CIRCUIT
C109	2883+65	56.0'	2-1
C111	2885+65	56.5'	2-1
C113	2887+65	56.0'	2-1
C115	2889+65	55.7'	2-1
C117	2891+65	56.7'	2-1
C119	2893+65	56.0'	2-1
C121	2895+65	55.9'	2-1
C123	2897+65	62.5'	2-1

RIGHT SIDE LIGHTS			
POLE NO.	BL EB FAI 270 STATION	OFFSET	CIRCUIT
C110	1883+63	56.1'	2-2
C112	1885+65	56.1'	2-2
C114	1887+65	56.0'	2-2
C116	1889+66	55.9'	2-2
C118	1891+65	56.0'	2-2
C120	1893+65	56.0'	2-2
C122	1895+65	56.1'	2-2
C124	1897+65	57.1'	2-2

LEGEND

- EXISTING ELECTRIC SERVICE INSTALLATION, 240/480V, 1 PHASE
- EXISTING LIGHTING CONTROLLER, 100 AMP, 240/480V, 1 PHASE
- PROPOSED HANDHOLE
- PROPOSED LIGHTING UNIT, 45' MOUNTING HEIGHT, LUMINAIRE LED, MOUNTED ON 15/ DAVIT ARM ATTACHED TO BRIDGE PARAPET
- PROPOSED LIGHTING UNIT, 50' MOUNTING HEIGHT, LUMINAIRE LED, ROADWAY ON 15' DAVIT ARM, 15" BOLT CIRCLE, AND 24" FOUNDATION

MODEL: Default
FILE NAME: I:\2017\6057\Cadd\Design\D876J90-sht-light-d04.dgn

ABNA

USER NAME = mconroy	DESIGNED - FPE	REVISED -	
	DRAWN - MJC	REVISED -	
PLOT SCALE = 50.0000 ' / in.	CHECKED - JMO	REVISED -	
PLOT DATE = 11/17/2021	DATE - 10/29/2021	REVISED -	

STATE OF ILLINOIS
DEPARTMENT OF TRANSPORTATION

FAI–270
PROPOSED ITS AND LIGHTING

SCALE: 1" = 50' | SHEET 4 OF 5 SHEETS | STA. 868+00.00 TO STA. 898+00.00

F.A.I. RTE.	SECTION	COUNTY	TOTAL SHEETS	SHEET NO.
270	60(B)-1	MADISON	860	185
		CONTRACT NO. 76J90		
		ILLINOIS FED. AID PROJECT		

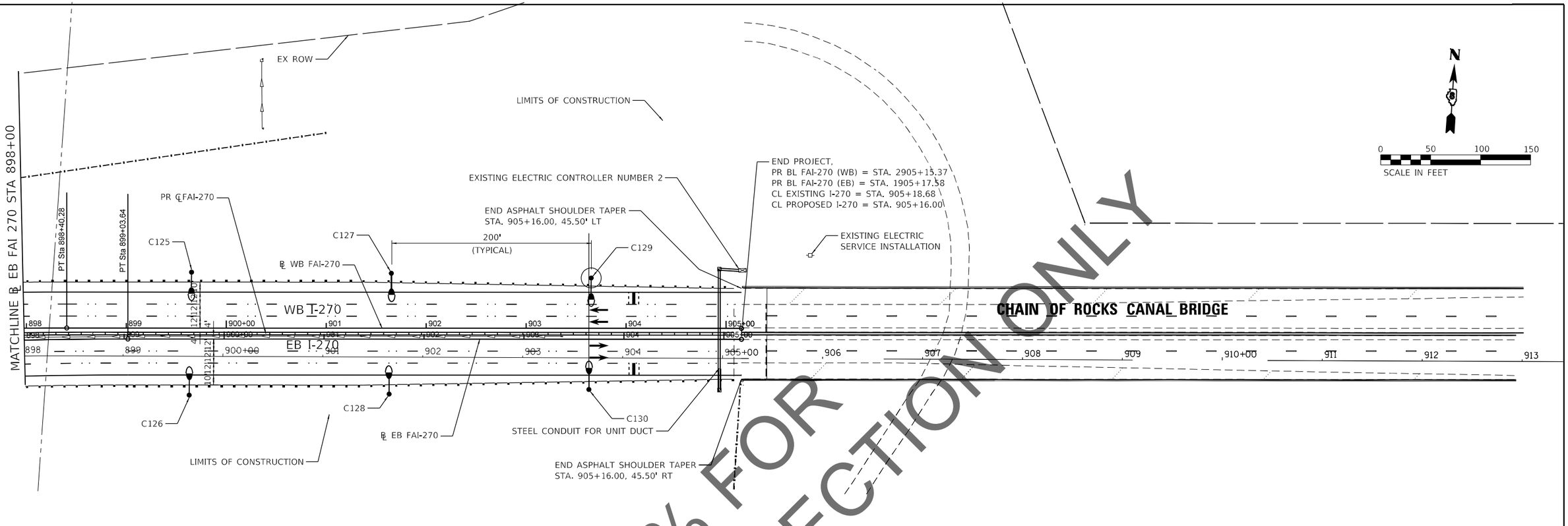

LEFT SIDE LIGHTS			
POLE NO.	BL WB FAI 270 STATION	OFFSET	CIRCUIT
C125	2899+65	56.0'	2-1
C127	2901+65	55.0'	2-1
C129	2903+65	50.3'	2-1

RIGHT SIDE LIGHTS			
POLE NO.	BL EB FAI 270 STATION	OFFSET	CIRCUIT
C126	1899+65	56.1'	2-1
C128	1901+65	55.0'	2-1
C130	1903+65	50.3'	2-1

LEGEND

- EXISTING ELECTRIC SERVICE INSTALLATION, 240/480V, 1 PHASE
- EXISTING LIGHTING CONTROLLER, 100 AMP, 240/480V, 1 PHASE
- PROPOSED HANDHOLE
- PROPOSED LIGHTING UNIT, 45' MOUNTING HEIGHT, LUMINAIRE LED, MOUNTED ON 15/ DAVIT ARM ATTACHED TO BRIDGE PARAPET
- PROPOSED LIGHTING UNIT, 50' MOUNTING HEIGHT, LUMINAIRE LED, ROADWAY ON 15' DAVIT ARM, 15" BOLT CIRCLE, AND 24" FOUNDATION

MODEL: Default
FILE NAME: I:\2017160\57\Cadd\Design\D876190-sht-light-405.dgn

ABNA

USER NAME = mconroy	DESIGNED - FPE	REVISED -	
	DRAWN - MJC	REVISED -	
PLOT SCALE = 50.0000 ' / in.	CHECKED - JMO	REVISED -	
PLOT DATE = 11/17/2021	DATE - 10/29/2021	REVISED -	

STATE OF ILLINOIS
DEPARTMENT OF TRANSPORTATION

FAI–270
PROPOSED ITS AND LIGHTING

SCALE: 1" = 50' | SHEET 5 OF 5 SHEETS | STA. 898+00.00 TO STA. 905+17.52

F.A.I. RTE.	SECTION	COUNTY	TOTAL SHEETS	SHEET NO.
270	60(B)-1	MADISON	860	186

CONTRACT NO. 76J90

ILLINOIS | FED. AID PROJECT

Illinois Department of Transportation

Luminaire Performance Table

Print Form | Reset Form

Project

Date	Contract Number	Section Number	County
01/04/21	76J90	60(B)-1	Madison

Marked Route Number	Municipality
I-270	

Roadway

Lane Width	# of Lanes	Median Width	I.E.S. Surface Classification	Q-Zero Value
12	3	15	R3	0.07

Structure

Mounting Height	Arm Length	Set-Back	Number of Luminaires (Highmast & Sign Lighting Only)
45	15	10	N/A

Luminaire

Description	I.E.S. Lateral Distribution	I.E.S. Vertical Distribution
Roadway, Output Designation G	Type III	Medium

Total Light Loss Factor (LLF)	B-U-G Rating	Shields	Dimming Protocol
0.7	U = 0	N/A	0-10V

Layout

Spacing (to Nearest 5 ft)	Configuration (Opposite, Staggered, 1 Sided, or Median)
200	Opposite

Performance

Average Illuminance, E_{AVE} (fc)	Uniformity Ratio, E_{AVE}/E_{MIN}
EB: 0.9 / WB: 0.9	EB: 3.0 / WB: 2.3

Average Luminance, L_{AVE} (cd/m²)	Uniformity Ratio, L_{AVE}/L_{MIN}	Uniformity Ratio, L_{MAX}/L_{MIN}	Veiling Luminance Ratio, L_V/L_{AVE}
EB: 0.6 / WB: 0.6	EB: 1.5 / WB: 1.5	EB: 2.5 / WB: 2.5	EB: 0.2 / WB: 0.2

Light Tresspass

Distance to ROW (behind pole)	Max. Horizontal Illuminance at ROW, E_H	Max. Vertical Illuminance at ROW, E_V
N/A	N/A	N/A

Notes

1. Set-Back is from Edge of Pavement (white line) except for sign luminaires when it is vertical and horizontal distance from the sign to the luminaire.
2. Lighting calculations shall be performed with all luminaires oriented toward and perpendicular to the roadway.
3. Total Light Loss Factor (LLF) = the product of "Lumen Maintenance" (LLD) = 0.9, "Dirt Depreciation" (LDD) = 0.8, and "Equipment Factors" (EF) = 0.95.
4. Performance requirements shall be the minimum acceptable standards of photometric performance for the luminaire, based on the given conditions listed above.

Calculation shall be performed with three lanes and shoulders in one direction.

Compliance with performance criteria shall be held to one significant digit.

Initial lumens of proposed luminaire may vary from the values specified in the table given in Article 1067.06 of the BDE Special Provision for Luminaire, LED.

Printed 01/05/21 BDE 5630 (04/10/19)

AEL (BRIDGE)

Illinois Department of Transportation

Luminaire Performance Table

Print Form | Reset Form

Project

Date	Contract Number	Section Number	County
01/04/21	76J90	60(B)-1	Madison

Marked Route Number	Municipality
270	

Roadway

Lane Width	# of Lanes	Median Width	I.E.S. Surface Classification	Q-Zero Value
12	3	15	R3	0.07

Structure

Mounting Height	Arm Length	Set-Back	Number of Luminaires (Highmast & Sign Lighting Only)
50	15	7	N/A

Luminaire

Description	I.E.S. Lateral Distribution	I.E.S. Vertical Distribution
Roadway, Output Designation G	Type III	Medium

Total Light Loss Factor (LLF)	B-U-G Rating	Shields	Dimming Protocol
0.7	U = 0	N/A	0-10V

Layout

Spacing (to Nearest 5 ft)	Configuration (Opposite, Staggered, 1 Sided, or Median)
200	Opposite

Performance

Average Illuminance, E_{AVE} (fc)	Uniformity Ratio, E_{AVE}/E_{MIN}
0.9	3.0

Average Luminance, L_{AVE} (cd/m²)	Uniformity Ratio, L_{AVE}/L_{MIN}	Uniformity Ratio, L_{MAX}/L_{MIN}	Veiling Luminance Ratio, L_V/L_{AVE}
0.6	3.5	6.0	0.3

Light Tresspass

Distance to ROW (behind pole)	Max. Horizontal Illuminance at ROW, E_H	Max. Vertical Illuminance at ROW, E_V
N/A	N/A	N/A

Notes

1. Set-Back is from Edge of Pavement (white line) except for sign luminaires when it is vertical and horizontal distance from the sign to the luminaire.
2. Lighting calculations shall be performed with all luminaires oriented toward and perpendicular to the roadway.
3. Total Light Loss Factor (LLF) = the product of "Lumen Maintenance" (LLD) = 0.9, "Dirt Depreciation" (LDD) = 0.8, and "Equipment Factors" (EF) = 0.95.
4. Performance requirements shall be the minimum acceptable standards of photometric performance for the luminaire, based on the given conditions listed above.

Calculation shall be performed with three lanes and shoulders in one direction.

Compliance with performance criteria shall be held to one significant digit.

Initial lumens of proposed luminaire may vary from the values specified in the table given in Article 1067.06 of the BDE Special Provision for Luminaire, LED.

Printed 01/05/21 BDE 5630 (04/10/19)

AEL (ROADWAY)

Illinois Department of Transportation

Luminaire Performance Table

Print Form | Reset Form

Project

Date	Contract Number	Section Number	County
01/04/21	76J90	60(B)-1	Madison

Marked Route Number	Municipality
I-270	

Roadway

Lane Width	# of Lanes	Median Width	I.E.S. Surface Classification	Q-Zero Value
12	3	15	R3	0.07

Structure

Mounting Height	Arm Length	Set-Back	Number of Luminaires (Highmast & Sign Lighting Only)
45	15	10	N/A

Luminaire

Description	I.E.S. Lateral Distribution	I.E.S. Vertical Distribution
Roadway, Output Designation G	Type III	Medium

Total Light Loss Factor (LLF)	B-U-G Rating	Shields	Dimming Protocol
0.7	U = 0	N/A	0-10V

Layout

Spacing (to Nearest 5 ft)	Configuration (Opposite, Staggered, 1 Sided, or Median)
200	Opposite

Performance

Average Illuminance, E_{AVE} (fc)	Uniformity Ratio, E_{AVE}/E_{MIN}
EB: 0.9 / WB: 0.9	EB: 2.0 / WB: 2.0

Average Luminance, L_{AVE} (cd/m²)	Uniformity Ratio, L_{AVE}/L_{MIN}	Uniformity Ratio, L_{MAX}/L_{MIN}	Veiling Luminance Ratio, L_V/L_{AVE}
EB: 0.8 / WB: 0.8	EB: 2.0 / WB: 2.0	EB: 3.0 / WB: 3.0	EB: 0.3 / WB: 0.3

Light Tresspass

Distance to ROW (behind pole)	Max. Horizontal Illuminance at ROW, E_H	Max. Vertical Illuminance at ROW, E_V
N/A	N/A	N/A

Notes

1. Set-Back is from Edge of Pavement (white line) except for sign luminaires when it is vertical and horizontal distance from the sign to the luminaire.
2. Lighting calculations shall be performed with all luminaires oriented toward and perpendicular to the roadway.
3. Total Light Loss Factor (LLF) = the product of "Lumen Maintenance" (LLD) = 0.9, "Dirt Depreciation" (LDD) = 0.8, and "Equipment Factors" (EF) = 0.95.
4. Performance requirements shall be the minimum acceptable standards of photometric performance for the luminaire, based on the given conditions listed above.

Calculation shall be performed with three lanes and shoulders in one direction.

Compliance with performance criteria shall be held to one significant digit.

Initial lumens of proposed luminaire may vary from the values specified in the table given in Article 1067.06 of the BDE Special Provision for Luminaire, LED.

Printed 01/05/21 BDE 5630 (04/10/19)

GE (BRIDGE)

Illinois Department of Transportation

Luminaire Performance Table

Print Form | Reset Form

Project

Date	Contract Number	Section Number	County
01/04/21	76J90	60(B)-1	Madison

Marked Route Number	Municipality
270	

Roadway

Lane Width	# of Lanes	Median Width	I.E.S. Surface Classification	Q-Zero Value
12	3	15	R3	0.07

Structure

Mounting Height	Arm Length	Set-Back	Number of Luminaires (Highmast & Sign Lighting Only)
50	15	7	N/A

Luminaire

Description	I.E.S. Lateral Distribution	I.E.S. Vertical Distribution
Roadway, Output Designation G	Type III	Medium

Total Light Loss Factor (LLF)	B-U-G Rating	Shields	Dimming Protocol
0.7	U = 0	N/A	0-10V

Layout

Spacing (to Nearest 5 ft)	Configuration (Opposite, Staggered, 1 Sided, or Median)
200	Opposite

Performance

Average Illuminance, E_{AVE} (fc)	Uniformity Ratio, E_{AVE}/E_{MIN}
0.9	3.0

Average Luminance, L_{AVE} (cd/m²)	Uniformity Ratio, L_{AVE}/L_{MIN}	Uniformity Ratio, L_{MAX}/L_{MIN}	Veiling Luminance Ratio, L_V/L_{AVE}
0.6	3.5	6.0	0.3

Light Tresspass

Distance to ROW (behind pole)	Max. Horizontal Illuminance at ROW, E_H	Max. Vertical Illuminance at ROW, E_V
N/A	N/A	N/A

Notes

1. Set-Back is from Edge of Pavement (white line) except for sign luminaires when it is vertical and horizontal distance from the sign to the luminaire.
2. Lighting calculations shall be performed with all luminaires oriented toward and perpendicular to the roadway.
3. Total Light Loss Factor (LLF) = the product of "Lumen Maintenance" (LLD) = 0.9, "Dirt Depreciation" (LDD) = 0.8, and "Equipment Factors" (EF) = 0.95.
4. Performance requirements shall be the minimum acceptable standards of photometric performance for the luminaire, based on the given conditions listed above.

Calculation shall be performed with three lanes and shoulders in one direction.

Compliance with performance criteria shall be held to one significant digit.

Initial lumens of proposed luminaire may vary from the values specified in the table given in Article 1067.06 of the BDE Special Provision for Luminaire, LED.

Printed 01/05/21 BDE 5630 (04/10/19)

GE (ROADWAY)

Illinois Department of Transportation

Luminaire Performance Table

Print Form | Reset Form

Project

Date	Contract Number	Section Number	County
01/04/21	76J90	60(B)-1	Madison

Marked Route Number	Municipality
I-270	

Roadway

Lane Width	# of Lanes	Median Width	I.E.S. Surface Classification	Q-Zero Value
12	3	15	R3	0.07

Structure

Mounting Height	Arm Length	Set-Back	Number of Luminaires (Highmast & Sign Lighting Only)
45	15	10	N/A

Luminaire

Description	I.E.S. Lateral Distribution	I.E.S. Vertical Distribution
Roadway, Output Designation G	Type III	Medium

Total Light Loss Factor (LLF)	B-U-G Rating	Shields	Dimming Protocol
0.7	U = 0	N/A	0-10V

Layout

Spacing (to Nearest 5 ft)	Configuration (Opposite, Staggered, 1 Sided, or Median)
200	Opposite

Performance

Average Illuminance, E_{AVE} (fc)	Uniformity Ratio, E_{AVE}/E_{MIN}
EB: 1.0 / WB: 1.0	EB: 3.0 / WB: 3.0

Average Luminance, L_{AVE} (cd/m²)	Uniformity Ratio, L_{AVE}/L_{MIN}	Uniformity Ratio, L_{MAX}/L_{MIN}	Veiling Luminance Ratio, L_V/L_{AVE}
EB: 0.7 / WB: 0.7	EB: 1.0 / WB: 1.0	EB: 2.0 / WB: 2.0	EB: 0.1 / WB: 0.1

Light Tresspass

Distance to ROW (behind pole)	Max. Horizontal Illuminance at ROW, E_H	Max. Vertical Illuminance at ROW, E_V
N/A	N/A	N/A

Notes

1. Set-Back is from Edge of Pavement (white line) except for sign luminaires when it is vertical and horizontal distance from the sign to the luminaire.
2. Lighting calculations shall be performed with all luminaires oriented toward and perpendicular to the roadway.
3. Total Light Loss Factor (LLF) = the product of "Lumen Maintenance" (LLD) = 0.9, "Dirt Depreciation" (LDD) = 0.8, and "Equipment Factors" (EF) = 0.95.
4. Performance requirements shall be the minimum acceptable standards of photometric performance for the luminaire, based on the given conditions listed above.

Calculation shall be performed with three lanes and shoulders in one direction.

Compliance with performance criteria shall be held to one significant digit.

Initial lumens of proposed luminaire may vary from the values specified in the table given in Article 1067.06 of the BDE Special Provision for Luminaire, LED.

Printed 01/05/21 BDE 5630 (04/10/19)

PHILIPS (BRIDGE)

Illinois Department of Transportation

Luminaire Performance Table

Print Form | Reset Form

Project

Date	Contract Number	Section Number	County
01/04/21	76J90	60(B)-1	Madison

Marked Route Number	Municipality
270	

Roadway

Lane Width	# of Lanes	Median Width	I.E.S. Surface Classification	Q-Zero Value
12	3	15	R3	0.07

Structure

Mounting Height	Arm Length	Set-Back	Number of Luminaires (Highmast & Sign Lighting Only)
50	15	7	N/A

Luminaire

Description	I.E.S. Lateral Distribution	I.E.S. Vertical Distribution
Roadway, Output Designation G	Type III	Medium

Total Light Loss Factor (LLF)	B-U-G Rating	Shields	Dimming Protocol
0.7	U = 0	N/A	0-10V

Layout

Spacing (to Nearest 5 ft)	Configuration (Opposite, Staggered, 1 Sided, or Median)
200	Opposite

Performance

Average Illuminance, E_{AVE} (fc)	Uniformity Ratio, E_{AVE}/E_{MIN}
0.9	3.0

Average Luminance, L_{AVE} (cd/m²)	Uniformity Ratio, L_{AVE}/L_{MIN}	Uniformity Ratio, L_{MAX}/L_{MIN}	Veiling Luminance Ratio, L_V/L_{AVE}
0.6	3.5	6.0	0.3

Light Tresspass

Distance to ROW (behind pole)	Max. Horizontal Illuminance at ROW, E_H	Max. Vertical Illuminance at ROW, E_V
N/A	N/A	N/A

Notes

1. Set-Back is from Edge of Pavement (white line) except for sign luminaires when it is vertical and horizontal distance from the sign to the luminaire.
2. Lighting calculations shall be performed with all luminaires oriented toward and perpendicular to the roadway.
3. Total Light Loss Factor (LLF) = the product of "Lumen Maintenance" (LLD) = 0.9, "Dirt Depreciation" (LDD) = 0.8, and "Equipment Factors" (EF) = 0.95.
4. Performance requirements shall be the minimum acceptable standards of photometric performance for the luminaire, based on the given conditions listed above.

Calculation shall be performed with three lanes and shoulders in one direction.

Compliance with performance criteria shall be held to one significant digit.

Initial lumens of proposed luminaire may vary from the values specified in the table given in Article 1067.06 of the BDE Special Provision for Luminaire, LED.

Printed 01/05/21 BDE 5630 (04/10/19)

PHILIPS (ROADWAY)

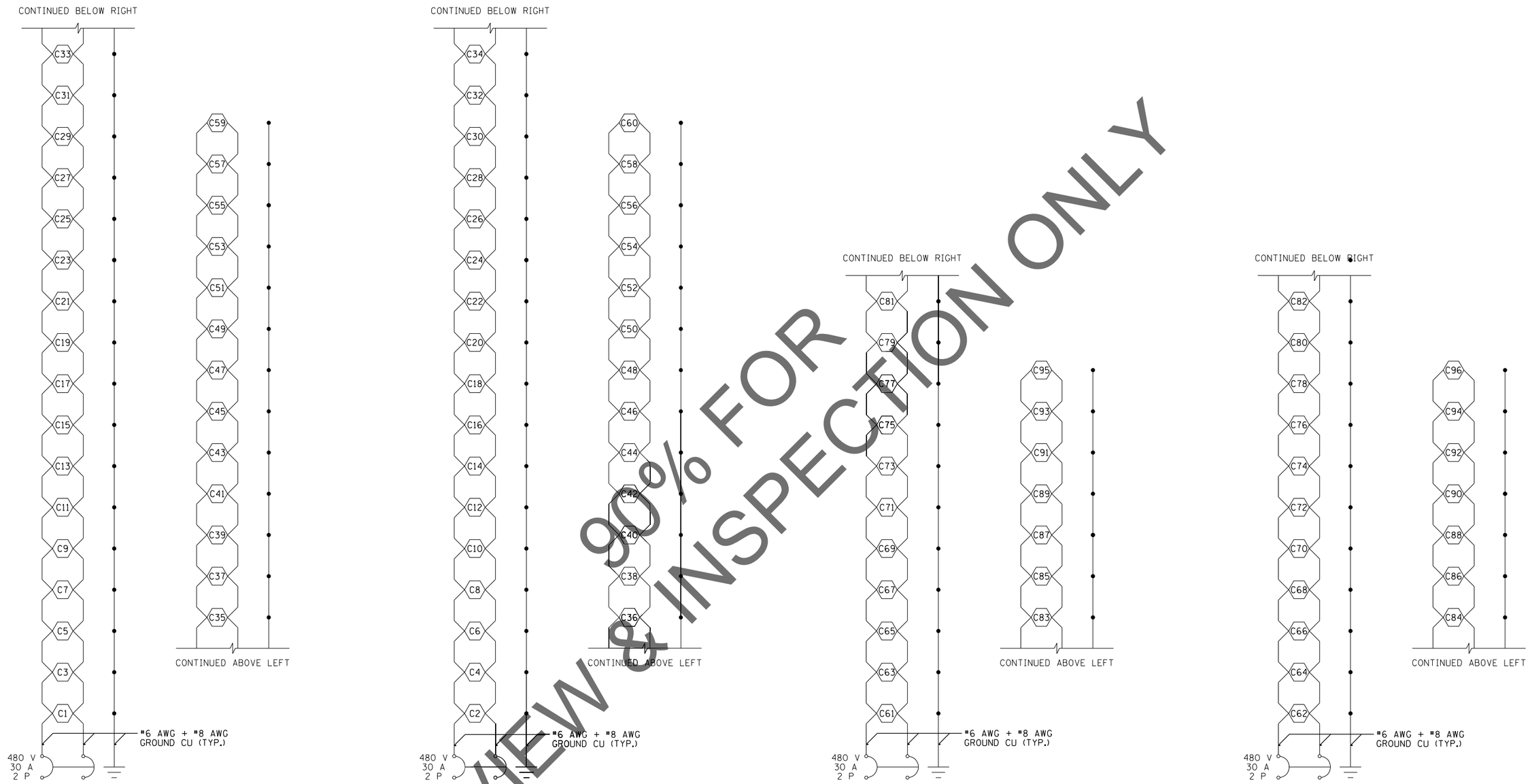

CONTROLLER 1 CIRCUIT 1

CONTROLLER 1 CIRCUIT 2

CONTROLLER 1 CIRCUIT 3

CONTROLLER 1 CIRCUIT 4

CONTROLLER 1 AT MISSISSIPPI BRIDGE WIRING DIAGRAM

ABNA

USER NAME = mconroy	DESIGNED - FPE	REVISED -	
	DRAWN - MJC	REVISED -	
PLOT SCALE = 50.0000 ' / in.	CHECKED - JMO	REVISED -	
PLOT DATE = 11/17/2021	DATE - 10/29/2021	REVISED -	

STATE OF ILLINOIS
DEPARTMENT OF TRANSPORTATION

FAI–270
CONTROLLER 1 WIRING DIAGRAM

SCALE: | SHEET 1 OF 2 SHEETS | STA. | TO STA.

F.A. RTE.	SECTION	COUNTY	TOTAL SHEETS	SHEET NO.
270	60(B)-1	MADISON	860	189

CONTRACT NO. 76J90

ILLINOIS | FED. AID PROJECT

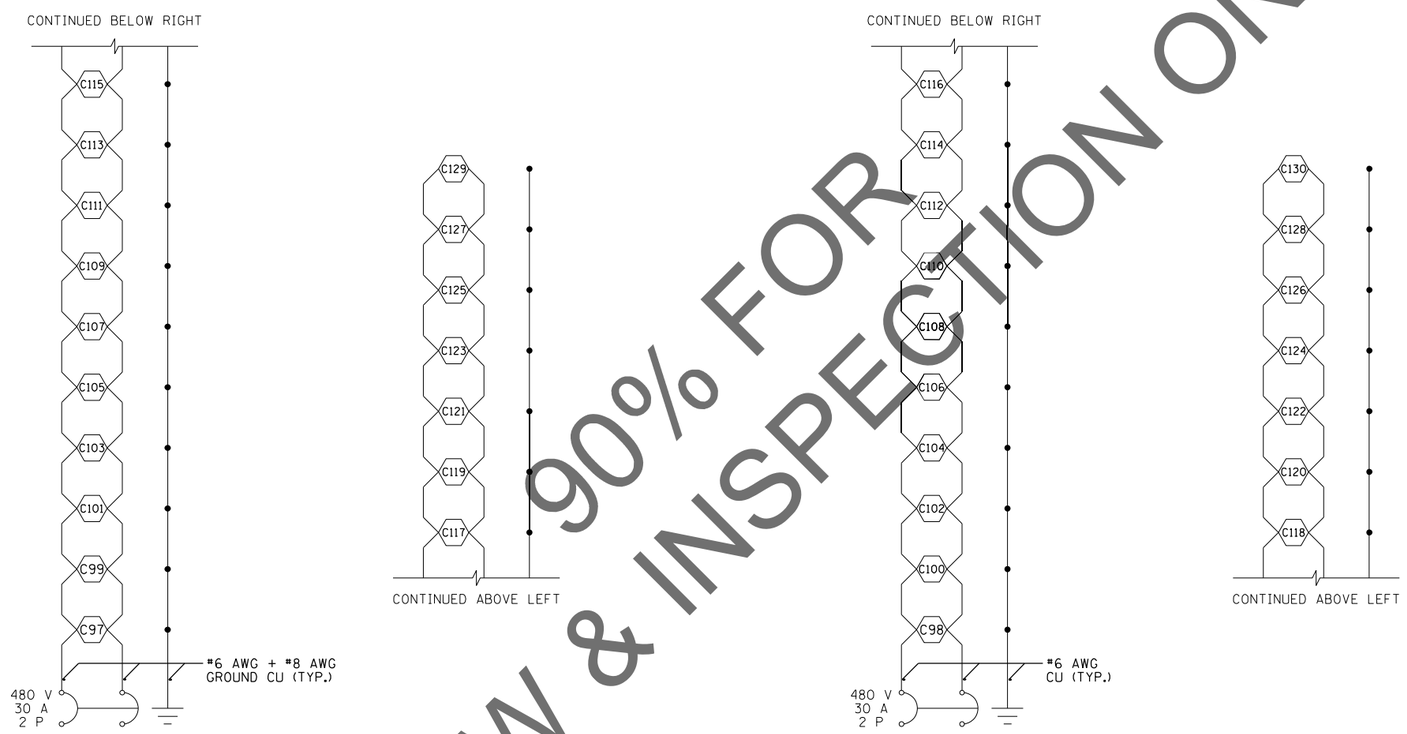

CONTROLLER 2 CIRCUIT 1

CONTROLLER 2 CIRCUIT 2

CONTROLLER 2 AT CANAL BRIDGE WIRING DIAGRAM

MODEL: Default
FILE NAME: I:\2017\6057\Cadd\Design\D876190-sht-light-d00x.dgn

ABNA	USER NAME = mconroy	DESIGNED - FPE	REVISED -	STATE OF ILLINOIS DEPARTMENT OF TRANSPORTATION	FAI–270 CONTROLLER 2 WIRING DIAGRAM
		DRAWN - MJC	REVISED -		
	PLOT SCALE = 50.0000 ' / in.	CHECKED - JMO	REVISED -		
	PLOT DATE = 11/17/2021	DATE - 10/29/2021	REVISED -		SCALE: SHEET 2 OF 2 SHEETS STA. TO STA.

F.A. RTE.	SECTION	COUNTY	TOTAL SHEETS	SHEET NO.
270	60(B)-1	MADISON	860	190
		CONTRACT NO. 76J90		
	ILLINOIS	FED. AID PROJECT		

SHEET UNDER DEVELOPMENT

ABNA

USER NAME = mconroy	DESIGNED - FPE	REVISED -	
	DRAWN - MJC	REVISED -	
PLOT SCALE = 50.0000 ' / in.	CHECKED - JMO	REVISED -	
PLOT DATE = 11/17/2021	DATE - 10/29/2021	REVISED -	

STATE OF ILLINOIS
DEPARTMENT OF TRANSPORTATION

FAI–270
UNDER BRIDGE TEMPORARY SIGN LIGHTING DETAILS

SCALE: | SHEET OF SHEETS | STA. TO STA.

F.A. RTE.	SECTION	COUNTY	TOTAL SHEETS	SHEET NO.
270	60(B)-1	MADISON	860	191
		CONTRACT NO. 76J90		
	ILLINOIS	FED. AID PROJECT		

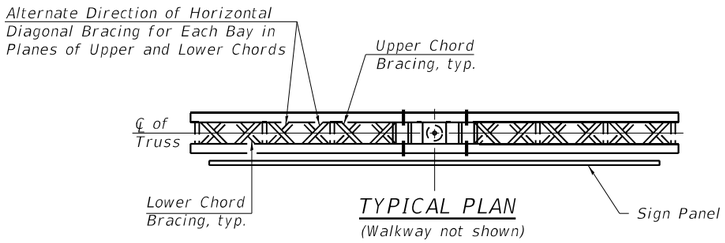

TYPICAL PLAN

(Walkway not shown)

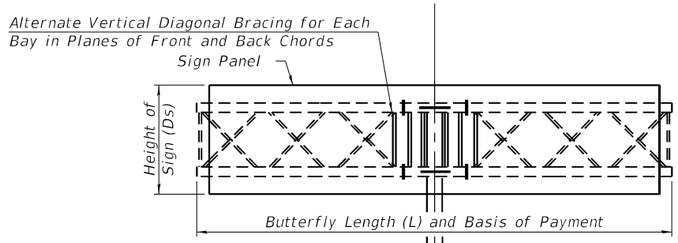

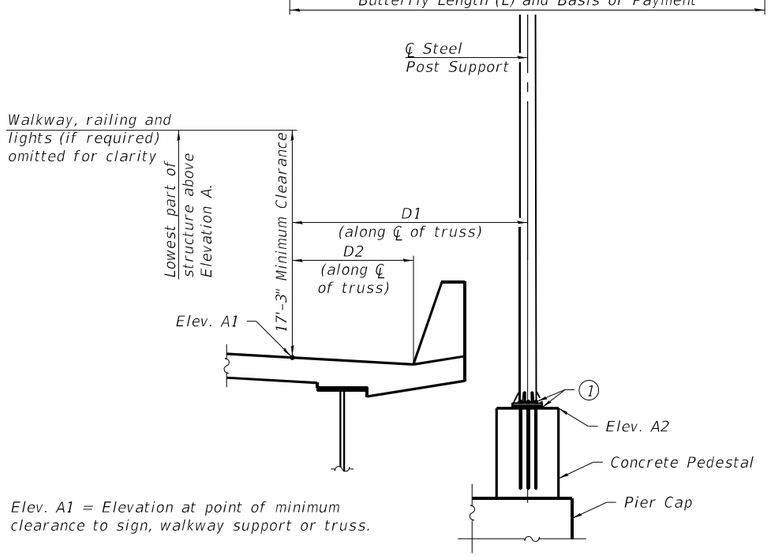

Elev. A1 = Elevation at point of minimum clearance to sign, walkway support or truss.

TYPICAL ELEVATION

Looking in Direction of Traffic

Sign support structures may be subject to damaging vibrations and oscillations when sign panels are not in place during erection or maintenance of the structure. To avoid these vibrations and oscillations, consideration should be given to attaching temporary blank sign panels to the structure.

Structure Number	Station	Design Truss Type	Total Butterfly Length (L)	Elev. A1	Elev. A2	Dim. D1	Dim. D2	Ds	Total Sign Area
8F060I270L35.5	2806+53.29	II-F-A	20'-6"	465.62	462.74	10'-3"	7'-3"	10'-6"	173.5 Sq. Ft.

TRUSS TYPE	MAXIMUM SIGN AREA	MAXIMUM LENGTH EACH WING
II-F-A	190 Sq. Ft.	30 Ft.

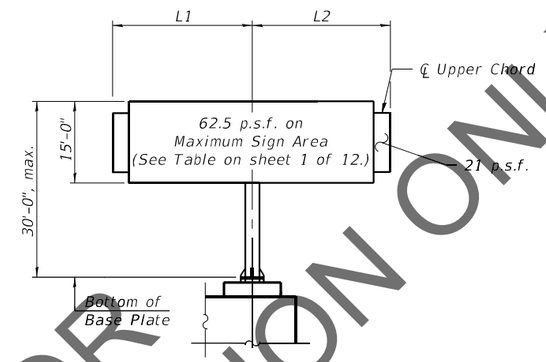

DESIGN WIND LOADING DIAGRAM

Parameters shown are basis for I.D.O.T. Standards Installations not within dimensional limits shown require special analysis for all components.

Note:
Trusses shall be shipped individually with adequate provision to prevent detrimental motion during transport. This may require ropes between horizontals and diagonals or energy dissipating (elastic) ties to the vehicle. The contractor is responsible for maintaining the configuration and protection of the trusses.

(1) After adjustments to level truss and insure adequate vertical clearance, all top and bottom leveling nuts shall be tightened against the base plate with a minimum torque of 200 lb.-ft. Stainless steel mesh shall then be placed around the perimeter of the base plate. Secure to base plate with stainless steel banding.

* If M270 Gr. 50W (M222) steel is proposed, chemistry for plate to be used shall first be approved by the Engineer as suitable for galvanizing and welding.

TOTAL BILL OF MATERIAL

ITEM	UNIT	TOTAL
OVERHEAD SIGN STRUCTURE BUTTERFLY TYPE II-F-A	Foot	20.5
OVERHEAD SIGN STRUCTURE WALKWAY, TYPE A	Foot	20.5

GENERAL NOTES

DESIGN: AASHTO Standard Specifications for Structural Supports for Highway Signs, Luminaires and Traffic Signals. ("AASHTO Specifications")

CONSTRUCTION: Current (at time of letting) Illinois Department of Transportation Standard Specifications for Road and Bridge Construction, Supplemental Specifications and Special Provisions. ("Standard Specifications")

LOADING: 125 M.P.H. WIND VELOCITY

WALKWAY LOADING: Dead load plus 500 lbs. concentrated live load.

DESIGN STRESSES
FIELD UNITS
f'c = 3,500 p.s.i.
fy = 60,000 p.s.i. (reinforcement)

WELDING: All welds to be continuous unless otherwise shown. All welding to be done in accordance with current AWS D1.1 and D1.2 Structural Welding Codes (Steel and Aluminum) and the Standard Specifications.

MATERIALS: Aluminum Alloys as shown throughout plans. All Structural Steel Pipe shall be ASTM A53 Grade B or A500 Grade B or C. If A500 pipe is substituted for A53, then the outside diameter shall be as detailed and wall thickness greater than or equal to A53.
All Structural Steel Plates and Shapes shall conform to AASHTO M270 Gr. 36, Gr. 50 or Gr. 50W* (M183, M223 Gr. 50, or M222). Stainless steel for shims, sleeves and handhole covers shall be ASTM A240, Type 302 or 304, or another alloy suitable for exterior exposure and acceptable to the Engineer.
The steel pipe and stiffening ribs at the base plate for the column shall have a minimum longitudinal Charpy V-Notch (CVN) energy of 15 lb.-ft. at 40° F. (Zone 2) before galvanizing.

FASTENERS FOR ALUMINUM TRUSSES: All bolts noted as "high strength" must satisfy the requirements of AASHTO M164 (ASTM A325), or approved alternate, and must have matching lock nuts. Threaded studs for splices (if Members interfere) must satisfy the requirements of ASTM A449, ASTM A193, Grade B7, or approved alternate, and must have matching lock nuts. Bolts and lock nuts not required to be high strength must satisfy the requirements of ASTM A307. All bolts and lock nuts must be hot dip galvanized per AASHTO M232. The lock nuts must have nylon or steel inserts. A stainless steel flat washer conforming to ASTM A240 Type 302 or 304, is required under both head and nut or under both nuts where threaded studs are used. High strength bolt installation shall conform to Article 505.04 (f) (2)d of the IDOT Standard Specifications for Road and Bridge Construction. Rotational capacity ("ROCAP") testing of bolts will not be required.

U-BOLTS AND EYEBOLTS: U-Bolts and Eyebolts must be produced from ASTM A276 Type 304, 304L, 316 or 316L, Condition A, cold finished stainless steel, or an equivalent material acceptable to the Engineer. All nuts for U-Bolts and Eyebolts must be lock nuts equivalent to ASTM A307 with nylon or steel inserts and hot dip galvanized per AASHTO M232. A stainless steel flat washer conforming to ASTM A240, Type 302 or 304, is required under each U-Bolt and Eyebolt lock nut.

GALVANIZING: All Steel Grating, Plates, Shapes and Pipe shall be Hot Dip Galvanized after fabrication in accordance with AASHTO M111. Painting is not permitted.

ANCHOR RODS: Shall conform to ASTM F1554 Gr. 105.

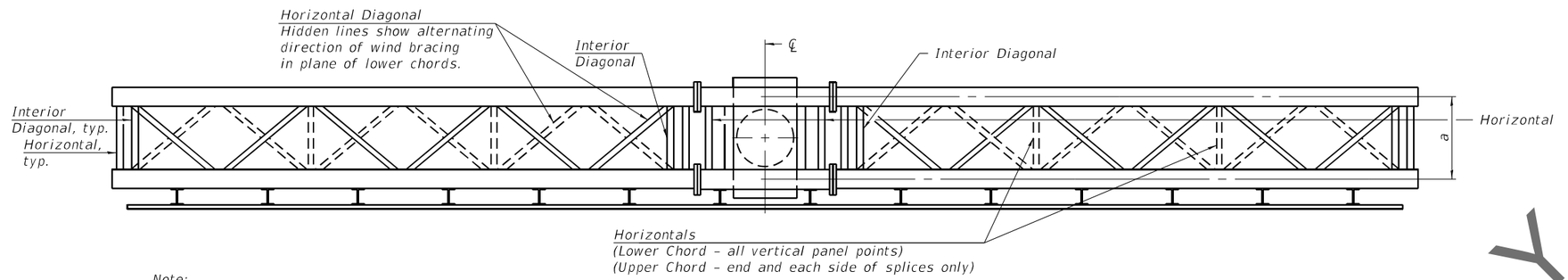

Note:
There are twice as many horizontal diagonals as there are vertical diagonals.

PLAN
(Walkway not shown)

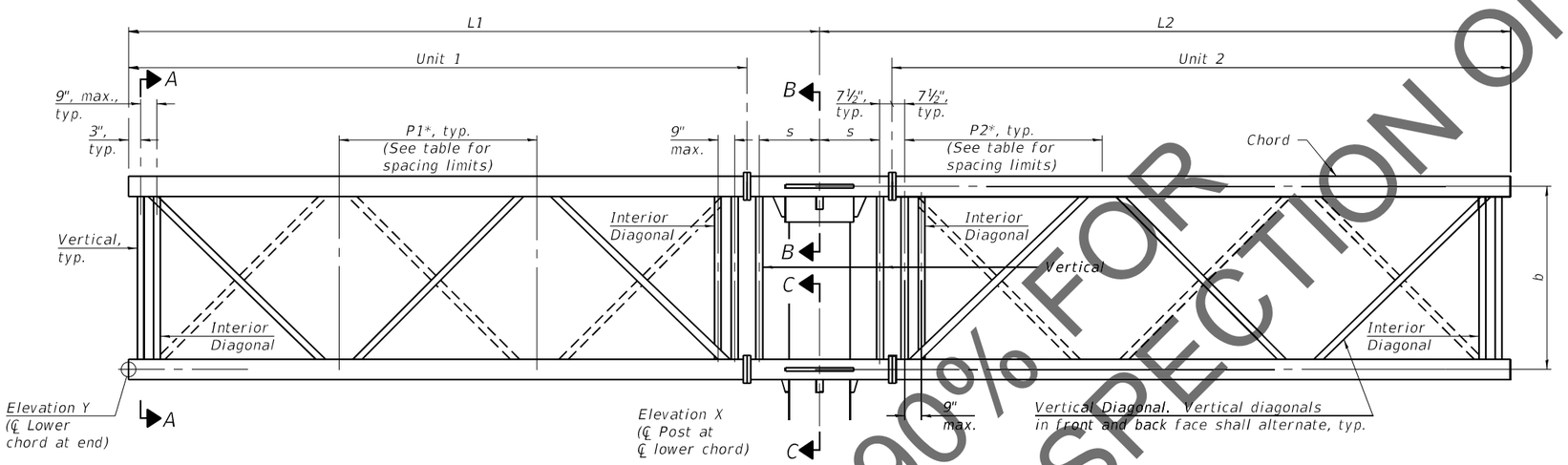

ELEVATION
(Sign and walkway omitted for clarity)

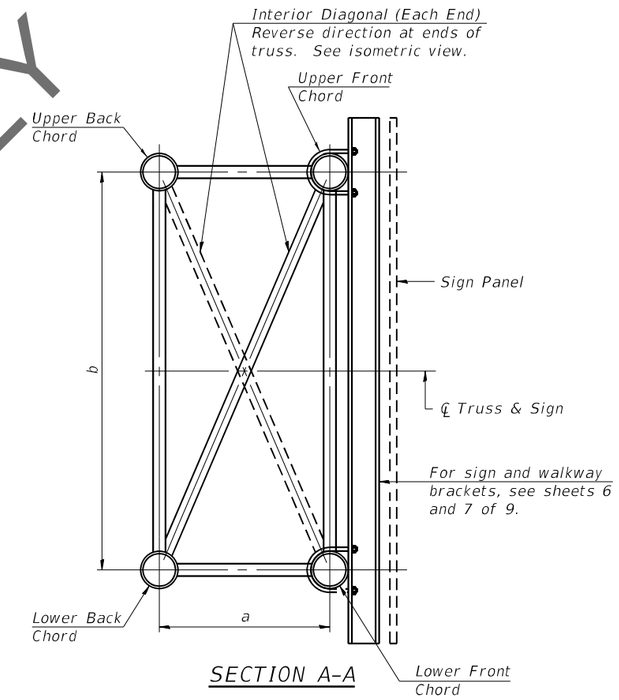

SECTION A-A

TYPICAL TRUSS UNIT

For Section B-B and Section C-C, see Base Sheet 0SF-A-3.

TRUSS UNIT TABLE

Truss Type	Dimension "a"	Dimension "b"	Dimension "s"	Limits for Panel Spacing (P)*	Up. & Low. Chord O.D.	Up. & Low. Chord Wall	Verticals; Horizontals; Vertical Horizontals; and Interior Diagonals	
II-F-A	36"	66"	21"	42" min. to 54" max.	6½"	5/16"	3¼"	5/16"

$$*P = \frac{L - s - 1'-6''}{\#\ Panels}$$

Structure Number	Station	Truss Type	L1	L2	Number of Panels Unit 1	Panel Length (P1)*	Number of Panels Unit 2	Panel Length (P2)*
8F060I270L35.5	2806+53.29	II-F-A	10'-3"	10'-3"	2	3'-6"	2	3'-6"

SHOP CAMBER TABLE

Unit Length L1 or L2	Shop Camber at End
15'	1½"
16'-17'	1¾"
18'-20'	2"
21'-22'	2¼"
23'-25'	2½"
26'-27'	2¾"
28'-30'	3"
31'-32'	3¼"
33'-35'	3½"

Truss Type	Bolts	Weld Sizes		A	B
	Dia.	W	W1		
I-F-A	⅞"	5/16"	¼"	8¾"	11¾"
II-F-A	1"	⅜"	¼"	11"	14½"
III-F-A	1¼"	9/16"	5/16"	11½"	15"

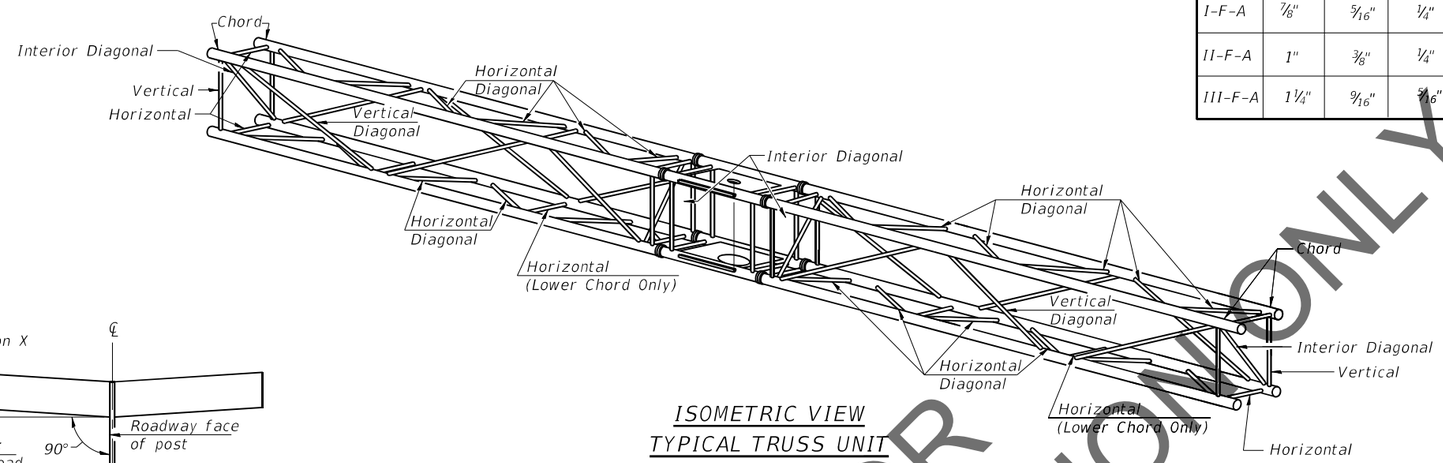

ISOMETRIC VIEW
TYPICAL TRUSS UNIT

ASTM B221 Alloy 6061 Temper T6

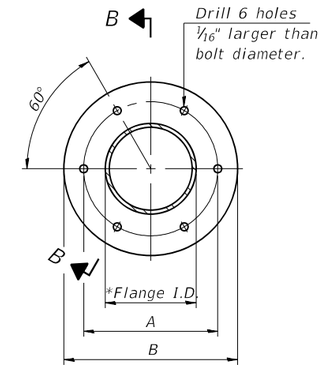

SPLICING FLANGE

ASTM b221, Alloy 6061-T6
or ASTM B209, Alloy 6061-T651

* To fit O.D. of Chord with maximum gap of 1/16".

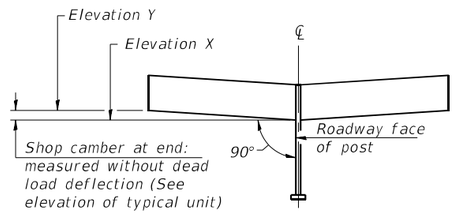

CAMBER DIAGRAM

(For Fabrication Only)

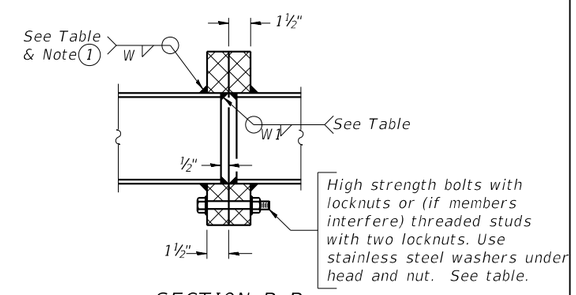

SECTION B-B

1 Splicing Flanges shall be attached to each truss unit with the truss shop assembled to camber shown. Truss units shall be in proper alignment and flange surfaces shall be shop bolted into full contact before welding. Sufficient external welds or tacks shall be made to secure flanges until remaining welds are made after disassembly. Adjacent flanges shall be "match marked" to insure proper field assembly.

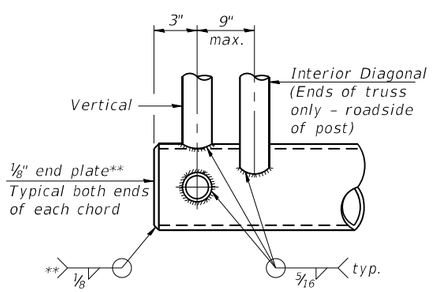

BUTTERFLY END JOINT DETAIL

** Contractor may alternatively use standard aluminum drive-fit cap to close ends. ½" Ø Drain hole in end plate / drive-fit cap.

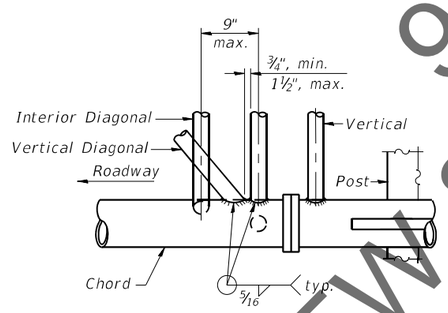

POST END JOINT DETAIL

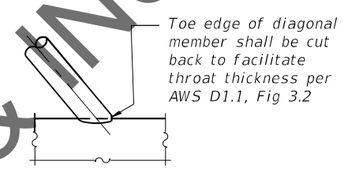

DETAIL A

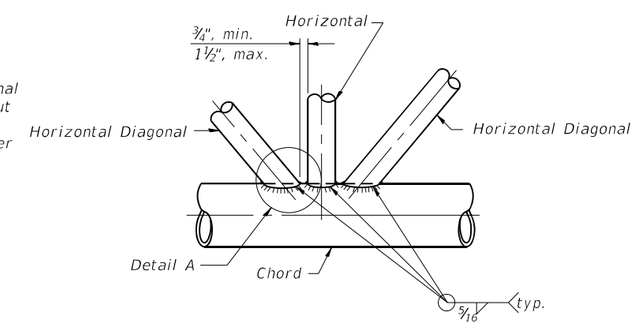

TRUSS INTERIOR JOINT DETAIL

OSF-A-2A

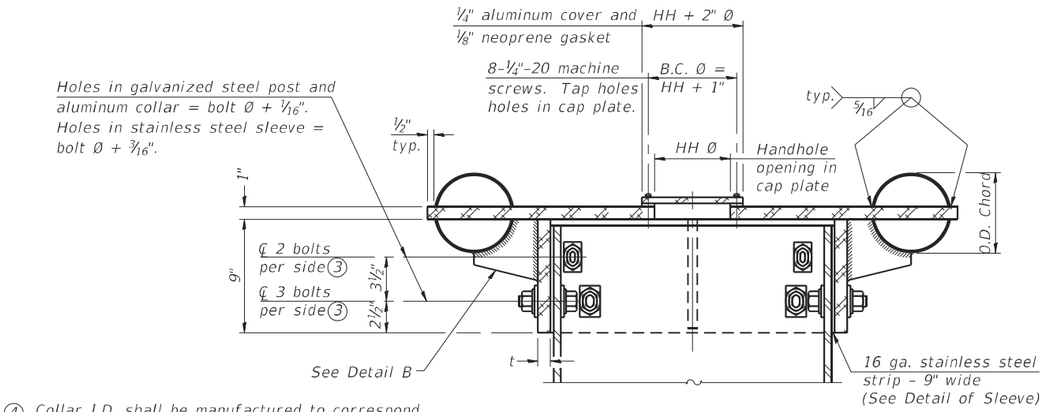

SECTION B-B

Bolts, washers (including contoured washers), and locknuts shall be stainless steel.

④ Collar I.D. shall be manufactured to correspond to O.D. of actual galvanized post and stainless steel sleeve plus ⅛" (±1/16"). Maximum gap between post and collar at any location equals ⅛" before tightening bolts.

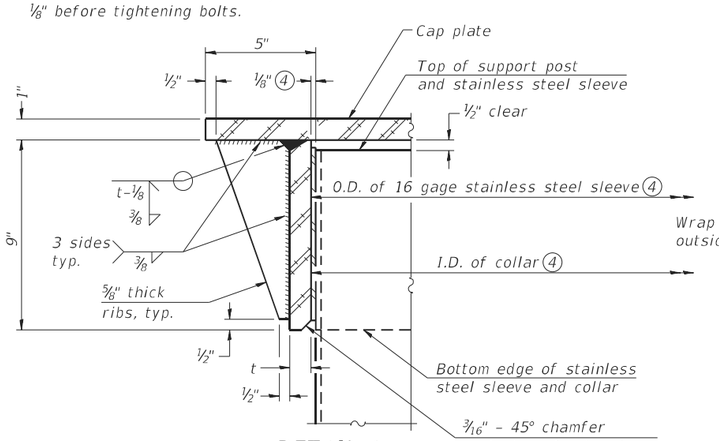

DETAIL A

(Two locations)

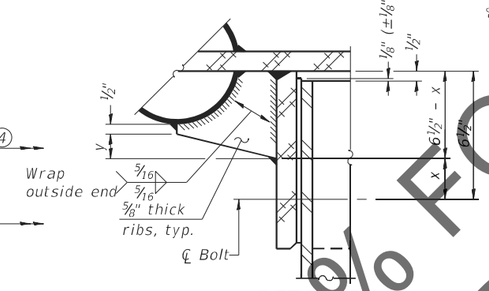

DETAIL B

Two locations

(For details not shown, see Detail C)

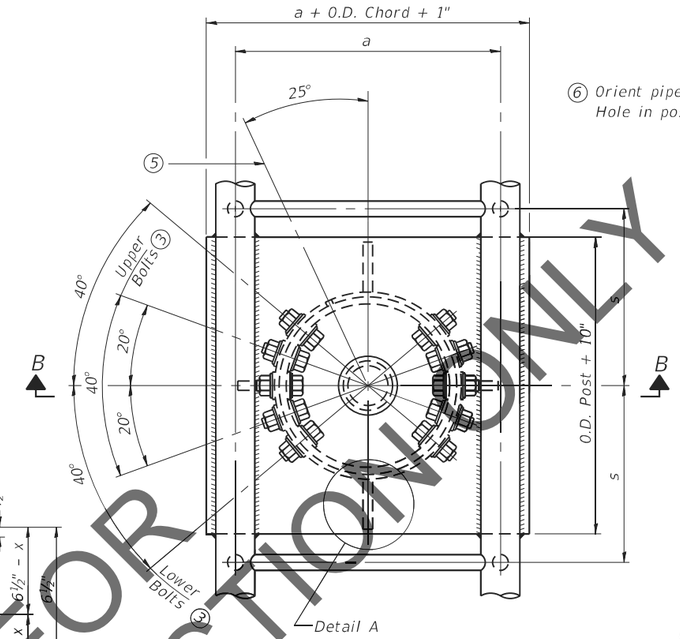

PLAN VIEW - TOP OF COLUMN

⑤ Optional full penetration weld in collar.

(Two locations maximum...(180° apart)....X-ray or UT 100%)

⑥ Orient pipe toward walkway side. Hole in post = O.D. pipe + ⅛".

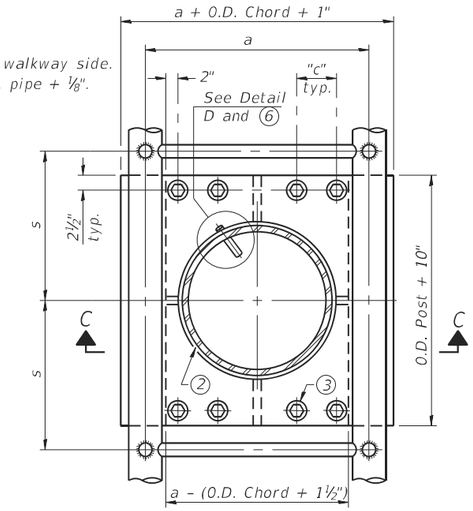

SECTION THRU POST ABOVE LOWER CHORDS

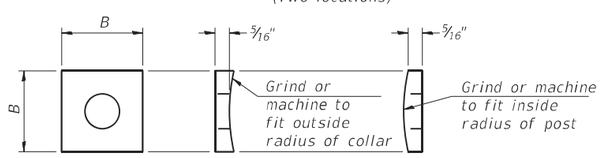

CONTOURED WASHERS

Bolt Size	Contoured Washers	
	Hole Dia.	B
⅞"	1"	2½"
1"	1⅛"	3"
1¼"	1⅜"	3¼"

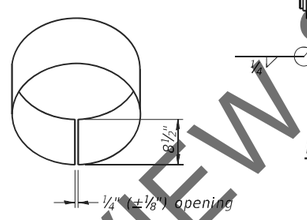

DETAIL OF STAINLESS STEEL SLEEVE

Weld to post after galvanizing. (Prepare post surface to insure tight, uniform fit and allow welding.) Welds to be 1½" long at 6" cts. along top edge and at ¼" opening.

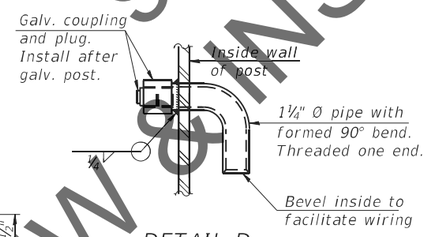

DETAIL D

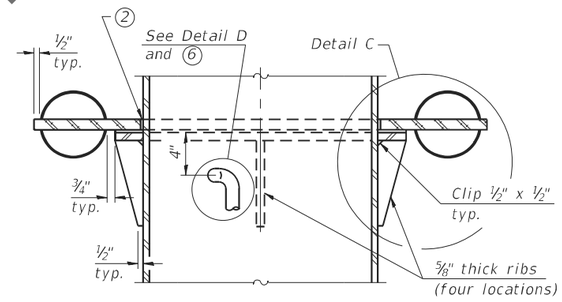

SECTION C-C

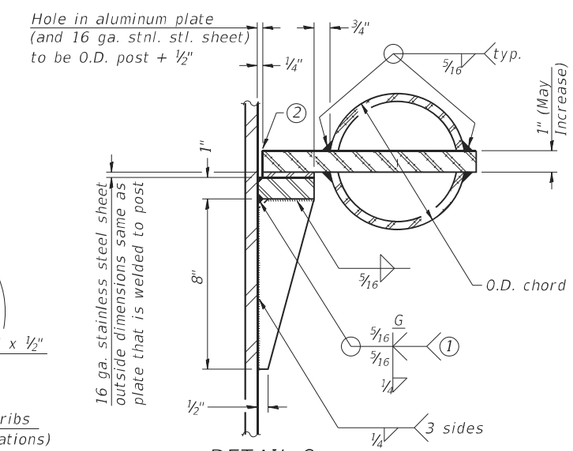

DETAIL C

① Grind top if required to fully seat aluminum plate and stainless steel sheet.

② After tightening lower connection bolts, fill gap with non-hardening, silicone caulk suitable for exterior exposure and acceptable to the Engineer. Cost is included in Overhead Sign Structure Butterfly.

Truss Type	Post Size	Upper & Lower Connection Bolt Diameter ③	Lower Juncture Bolt Spacing Dimension "c" ③	Opening in Cap Plate "HH"	Collar Thickness (t)	Side Ribs	
						x	y
I-F-A	16" Ø (83#/')	⅞"	3¼"	8"	⅝"	1¾"	2¼"
II-F-A	24" Ø (125#/')	1"	3½"	12"	⅞"	2"	1¼"
III-F-A	24" Ø (125#/')	1¼"	3½"	12"	⅞"	2"	1"

③ Upper and lower connection bolts in collar and bolts at lower chord connection must be high strength with matching locknuts. Connection bolts shall have two stainless steel flat washers each.

OSF-A-3

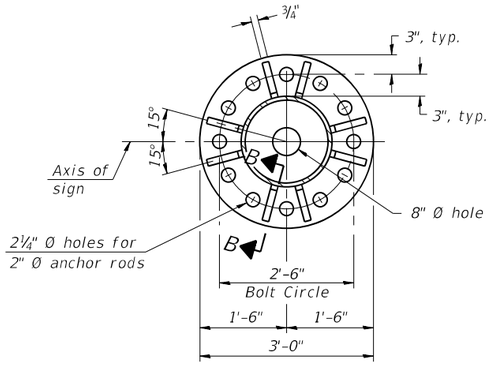

SECTION A-A

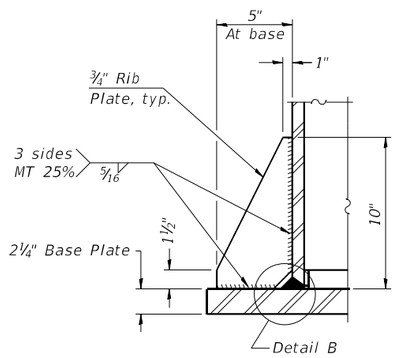

SECTION B-B

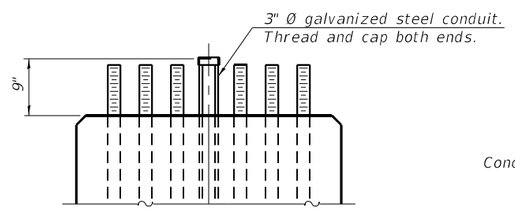

ELEVATION

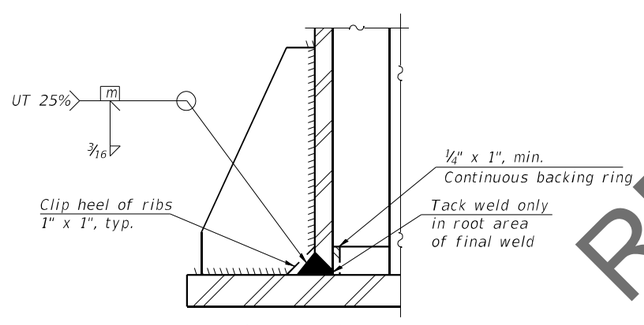

DETAIL B

(Typical rib)

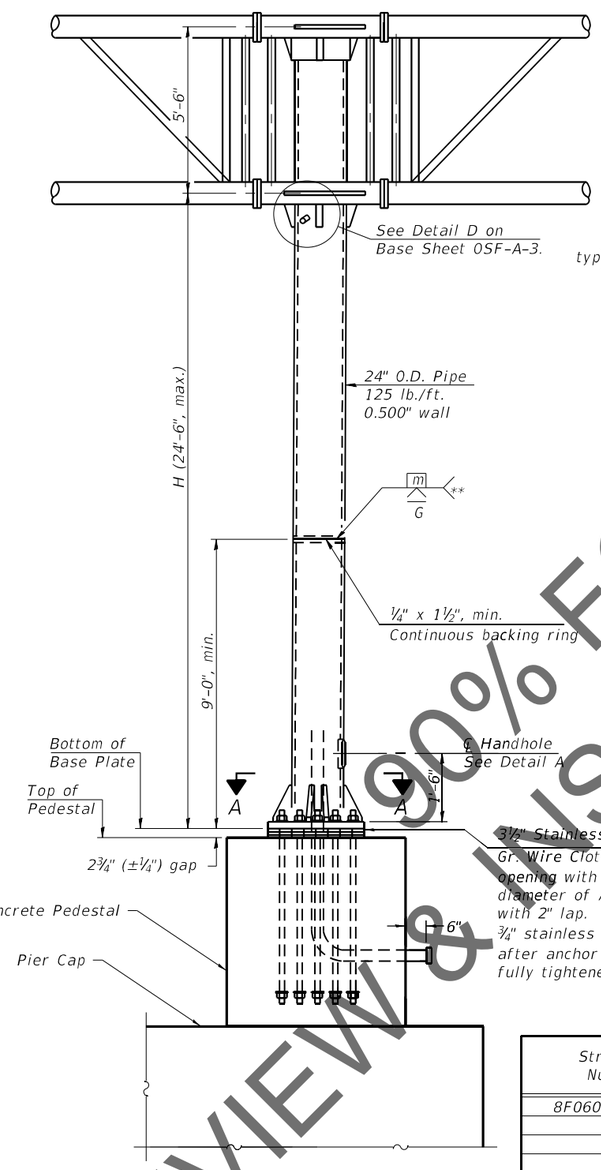

FRONT ELEVATION

(Sign not shown for clarity)

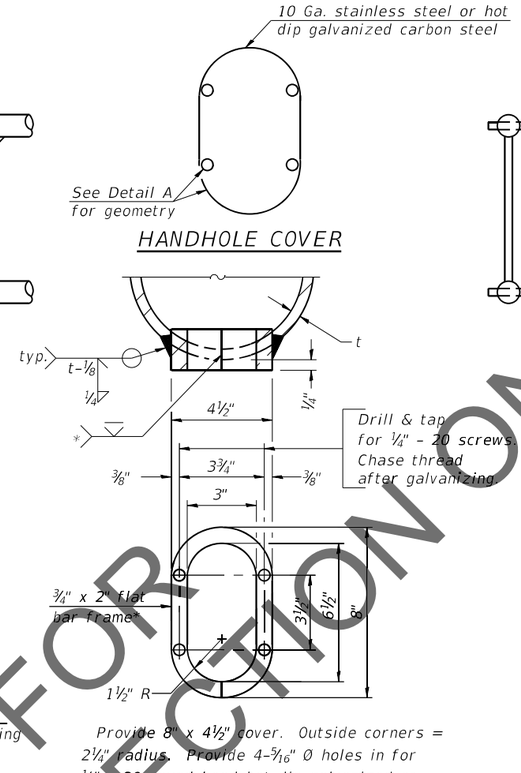

SIDE ELEVATION

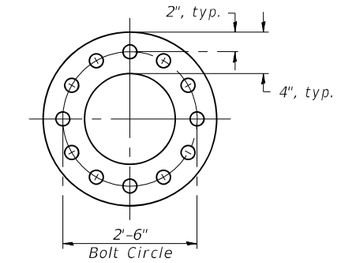

SUGGESTED POSITIONING PLATE

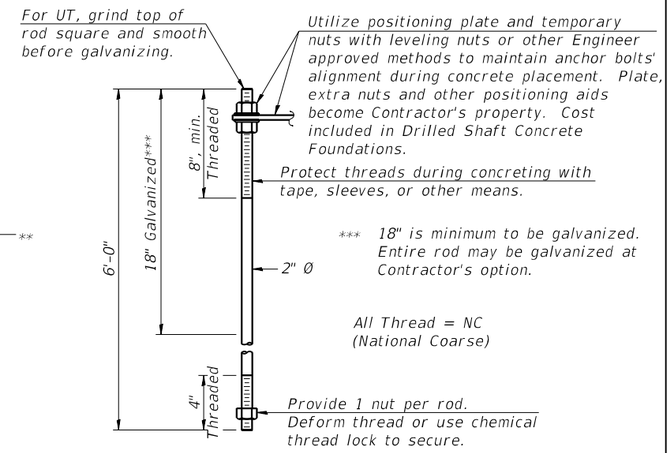

ANCHOR ROD DETAIL

Anchor rods shall conform to ASTM F1554 Grade 105. Galvanize the upper 18" (minimum***) and associated AASHTO M291, Grade A, C or DH heavy hex nuts and hardened washers per AASHTO M232. No welding shall be permitted on rods. Provide a nut at bottom, a hexagon locknut and washer above base plate and a leveling nut and washer below base plate. Nuts shall each be tightened with 200 lb.-ft. minimum torque against base plate. Before or after threading, but before galvanizing, each anchor rod shall be ultrasonically tested (UT) by a Level II or III inspector, qualified in accord with ANSI guidelines, to insure no rejectable flaws exist in the upper 18" (tension criteria). Cost of testing included in Drilled Shaft Concrete Foundations.

Structure Number	Station	H
8F060I270L35.5	2806+53.29	24'-6"

Note: "H" based on 15'-0" or actual sign height, whichever is greater.

* Bent bars may be butt welded top and bottom or bottom only. In lieu of fabricated handhole frame as shown, may cut from 2" plate (rolling direction vertical). All cut faces to be ground to ANSI Roughness of 500µ in or less.

** Butt welded joint in post is only allowed for post heights (H) over 20 ft. in length. If used, weld procedure must be preapproved by Engineer and joint shall receive 100% RT or UT (tension criteria) at Contractor's expense.

Notes:
For Anchor Details between Pier Cap and Concrete Pedestal and grounding to AnchorRods, see Bridge Contract Plans.
Grind Anchor Rod to bright finish at ground clamp location before installing clamp.

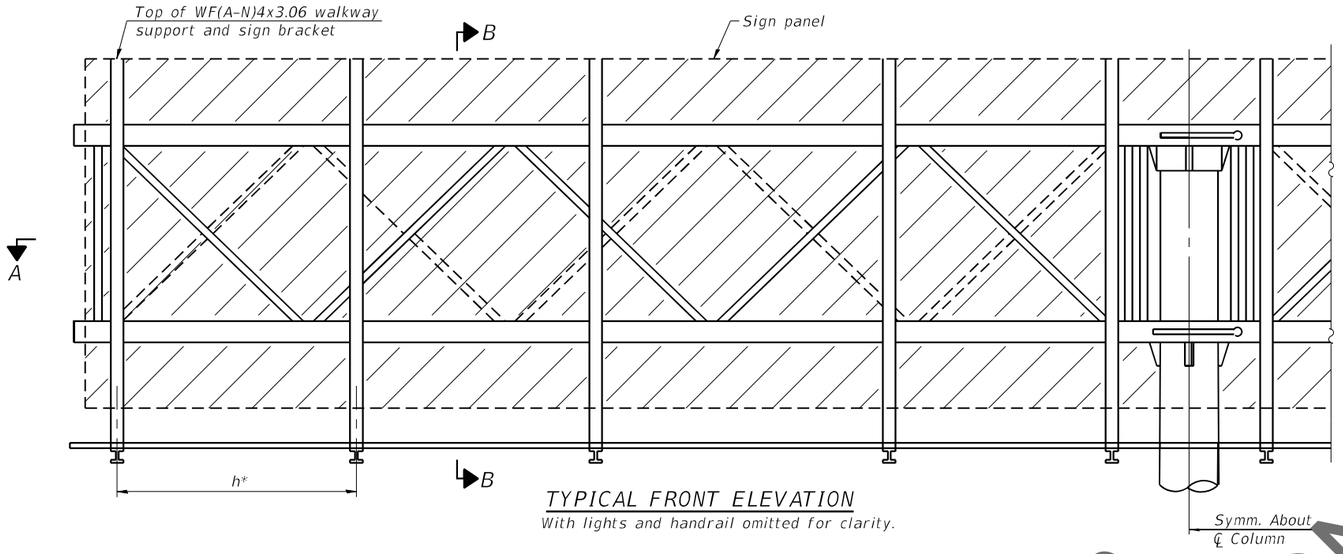

TYPICAL FRONT ELEVATION

With lights and handrail omitted for clarity.

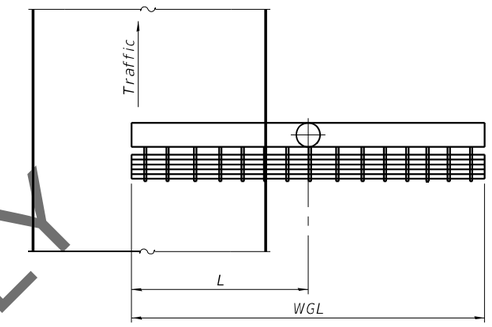

PLAN
WALKWAY AND HANDRAIL SKETCH

(Road plan beneath truss varies)

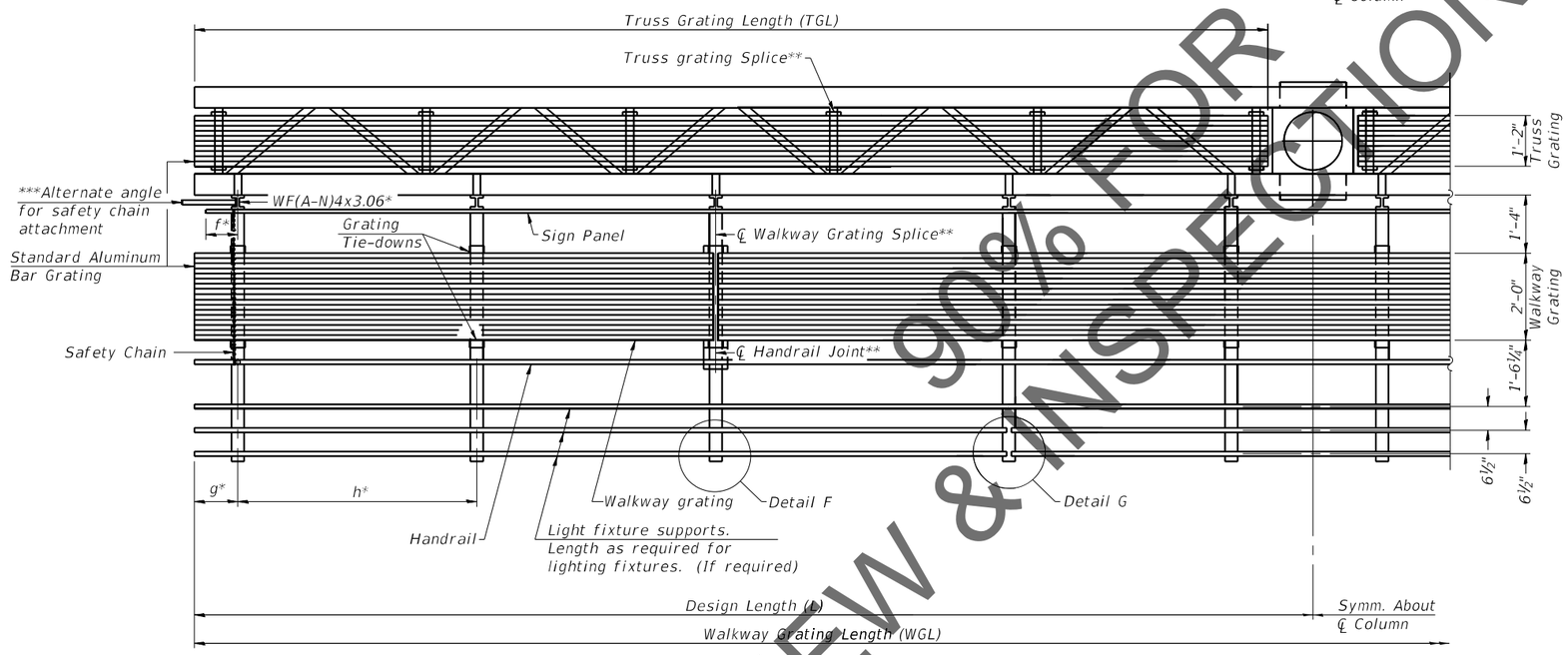

SECTION A-A

Handrail and walkway grating shall span a minimum of three brackets between splices.
**Use and location of handrail joint or grating splices are optional, based on lengths needed and material availability.

$$TGL = 2*[L - (\frac{Post\ O.D.}{2} + 6")]$$

Truss grating to facilitate inspection shall run full length of cantilevers. Cost of truss grating is included in "Overhead Sign Structure Butterfly".

Structure Number	Station	L	WGL	TGL
8F0601270L35.5	2806+53.29	10'-3"	20'-6"	17'-6"

Notes:

* Space sign and walkway support brackets WF(A-N)4x3.06. for efficiency and within limits shown:

f = 12" maximum, 4" minimum (End of sign to ℄ of nearest bracket)
g = 12" maximum, 4" minimum (End of walkway to ℄ of nearest bracket)
h = 6'-0" maximum (℄ to ℄ sign and walkway support brackets, WF(A-N)4x3.06)

*** If walkway bracket at safety chain location is behind sign, add angle to bracket. See alternate safety chain attachment on base sheet OSF-A-8.

For details of sign placement, sign/walkway brackets, truss and walkway gratings, grating splices and Section B-B, see sheet 7 of 9.
For details of handrail, handrail joint, safety chain and Details F and G, see Base Sheet OSF-A-8.

BRACKET TABLE

WF(A-N)4x1.79 or WF(A-N)4x3.06 ASTM B308, Alloy 6061-T6		
Sign Width		Number Brackets Required
Greater Than	Less Than or Equal To	
	8'-0"	2
8'-0"	14'-0"	3
14'-0"	20'-0"	4
20'-0"	26'-0"	5
26'-0"	32'-0"	6

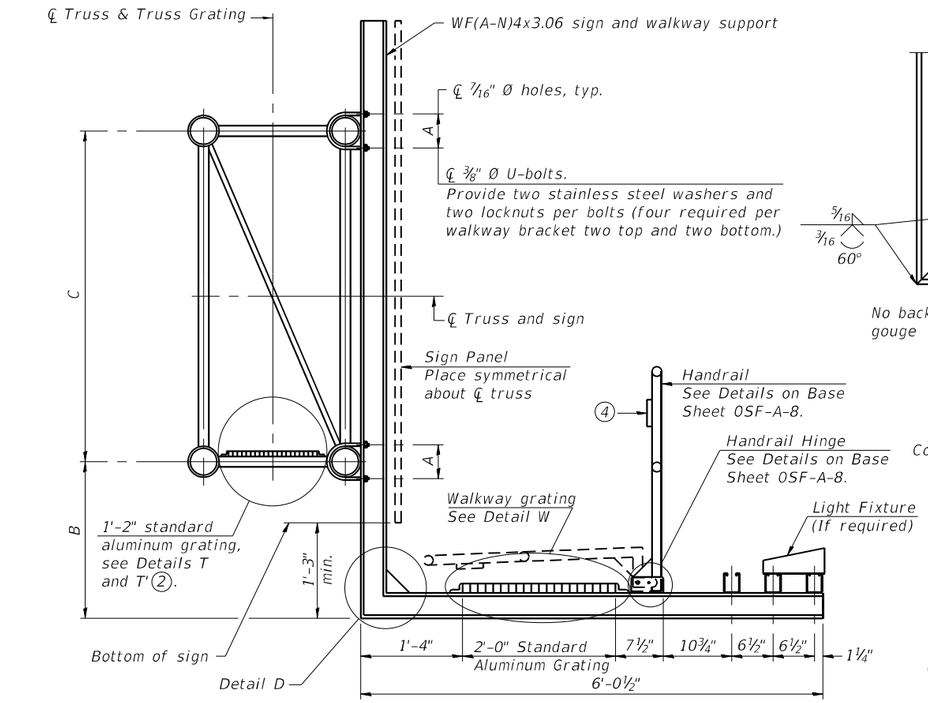

SECTION B-B

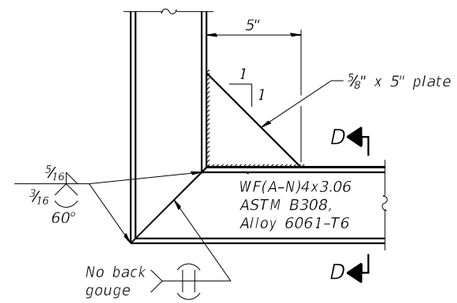

DETAIL D

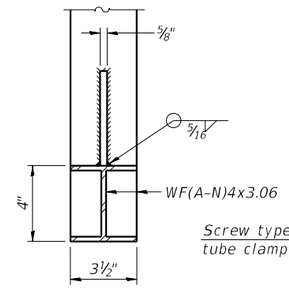

SECTION D-D

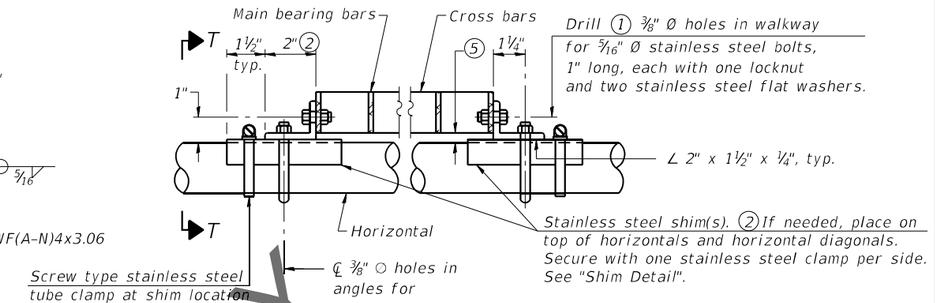

DETAIL T

(Truss grating at horizontal)

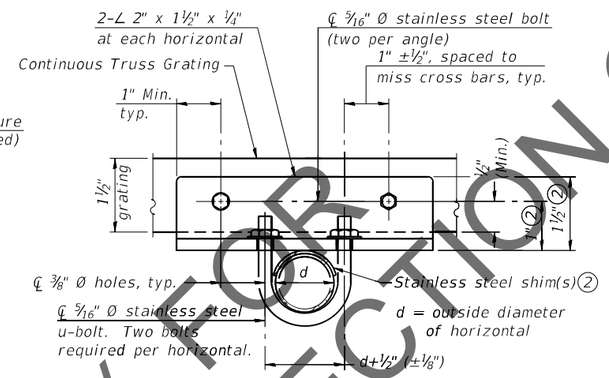

SECTION T-T

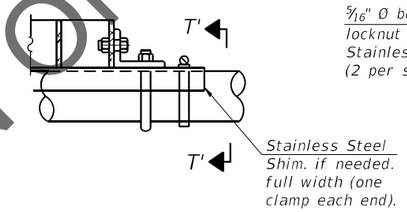

DETAIL T'

(Truss grating splice)

Details not shown same as Detail T. Alternate materials may be used subject to the Engineer's review and approval.

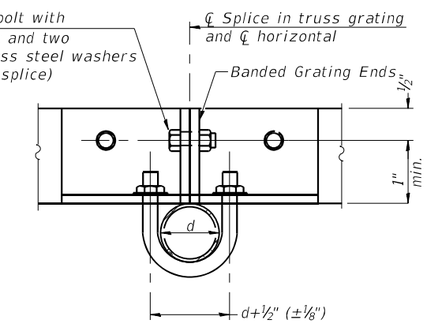

SECTION T'-T'

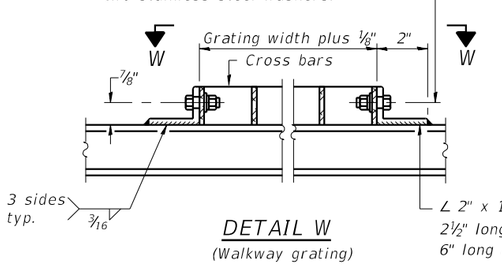

DETAIL W

(Walkway grating)

Sign shall be even with the top of the bracket, but it may extend to no more than 6" above the top of the bracket for field adjustments.

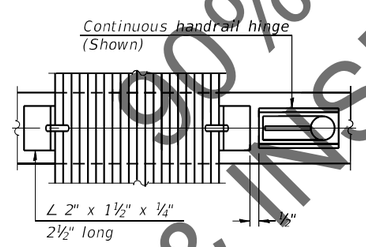

(CONTINUOUS WALKWAY GRATING)

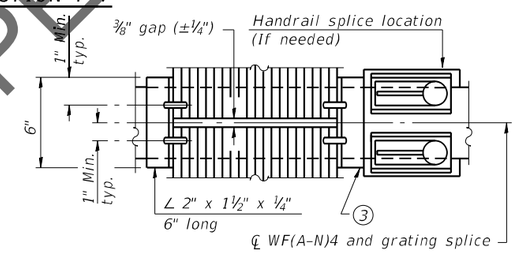

(AT WALKWAY GRATING SPLICE)

SECTION W-W

1. Drilling holes in grating may be done in shop or field, based on Contractor's preference and subject to accurate alignment.
2. Stainless steel shims shall be placed as shown in Detail T if needed to compensate for alignment variations between horizontal and diagonal pipes beyond adjustment provided by angles. Thicker shims may be used subject to shims performing properly.
3. If Handrail Joint present, weld angle to WF(A-N)4 and ¼" extension bars. (See Base Sheet OSF-A-8)
4. PL ⅛" x ½" x 2" welded to handrail posts to protect locations that contact grating.
5. Tube to grating gap may very from 0 to ½" max. to align walkway, allow for camber, etc.
6. Based on actual sign height, Ds, given on sheet 1 of 9.

Structure Number	Station	A	B	6 C
8F060I270L35.5	2806+53.29	3¾"	3'-9"	5'-6"

SPECIFICATIONS FOR STANDARD ALUMINUM GRATING

Main Bearing Bars (MBB) shall be 3/16" x 1½" on 1 3/16" centers and conform to ASTM B211 Alloy 6061-T6.

Cross bars (CB) shall be 3/16" x 1½" on 4" centers and conform to ASTM B221 Alloy 6063-T5 or 6061-T6.

OR

Aluminum Grating with modified "t" sections for main bearing bars shall meet the following requirements:

Main bars shall conform to ASTM B221 Alloy 6061-T6 and have a minimum section modulus equal to 0.0705 in.³ per bar, a depth of 1½", spaced on 1 3/16" centers.

Cross bars shall conform to ASTM B221 Alloy 6063-T5 or T-42 and spaced on 4" centers.

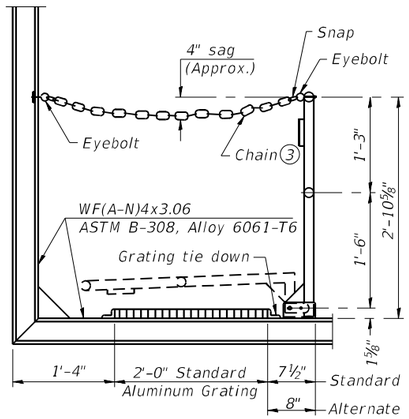

SIDE ELEVATION

(Showing Safety Chain W/O Sign)

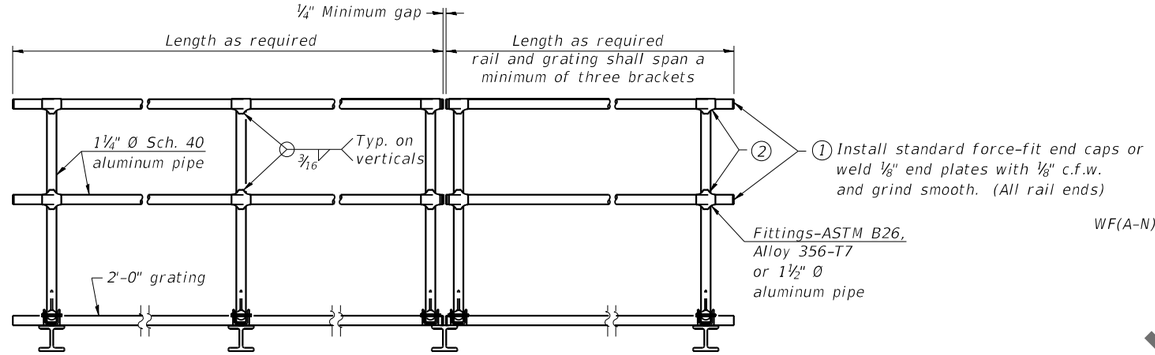

FRONT ELEVATION

(2) Horizontal handrail member shall be continuous thru fitting. Provide 7/16" Ø hole in fitting for ⅜" Ø bolt. Field drill 7/16" Ø hole in horizontal rail member. Provide locknut and two stainless steel washers for bolt. (Use 5/16" eyebolts in 7/16" Ø holes on top rail at ends only.)

HANDRAIL DETAILS

Handrail pipe shall be ASTM B241 or B429, Alloy 6063-T6 or Alloy 6061-T6.

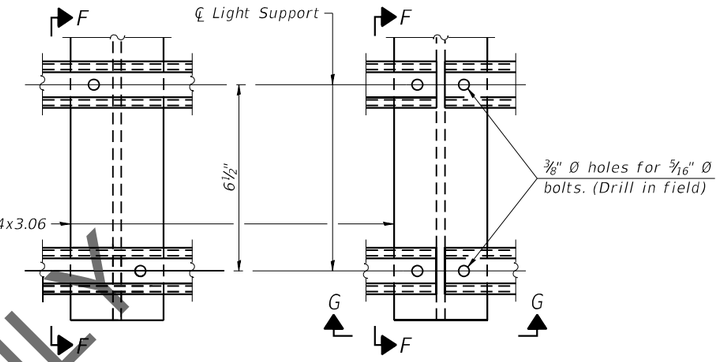

DETAIL F

DETAIL G

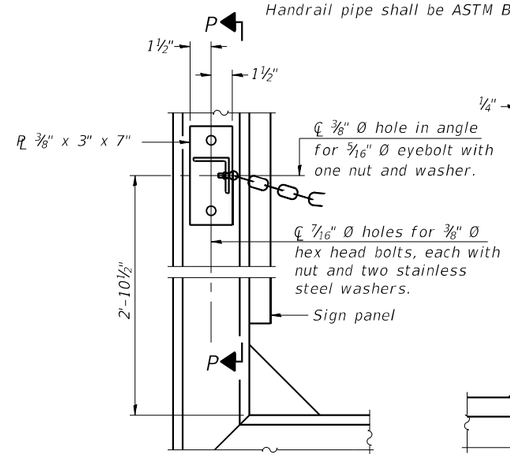

ALTERNATE SAFETY CHAIN ATTACHMENT

(With Sign Present)

Items not shown same as "Side Elevation" of "Handrail Details"

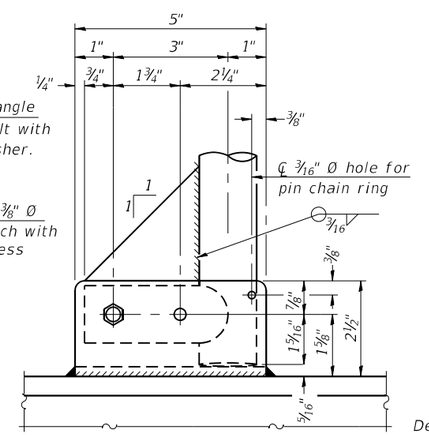

SIDE ELEVATION

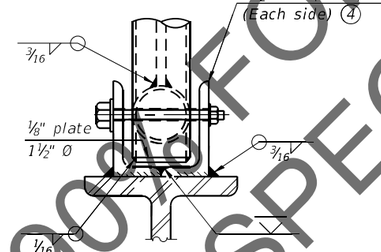

FRONT ELEVATION

Details not shown same as "ELEVATION" at right.

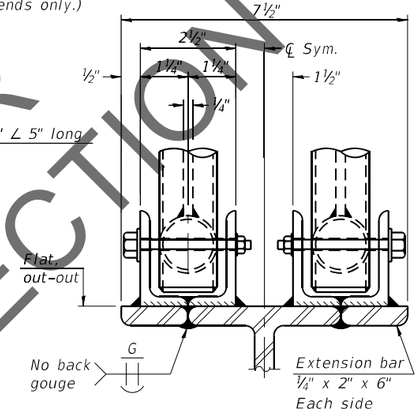

ELEVATION AT HANDRAIL JOINT (4)

Details not shown same as "FRONT ELEVATION"

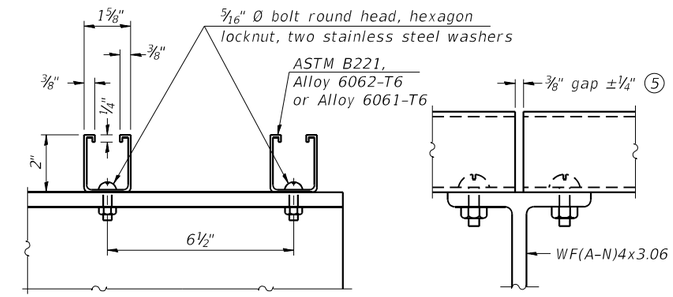

SECTION F-F

SECTION G-G

LIGHTING FIXTURE MOUNTS (IF REQUIRED)

(5) Field cut ends of light support channels shall be free of burrs or hazardous projections and coated with zinc-rich primer or equivalent.

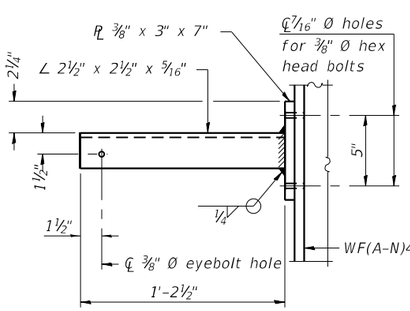

SECTION P-P

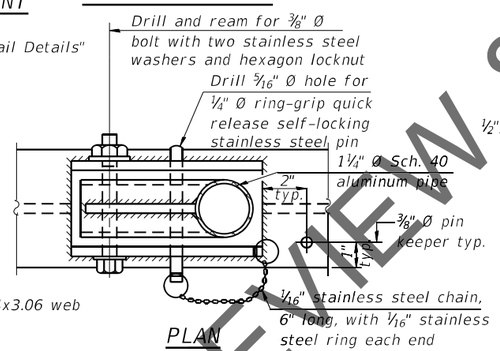

PLAN

DETAIL E HANDRAIL HINGE

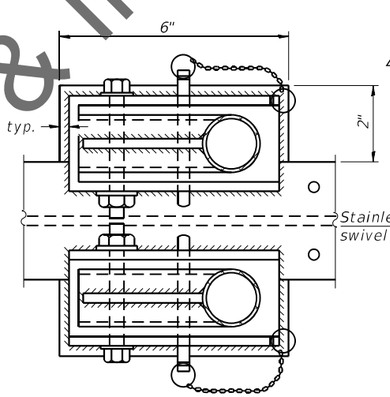

PLAN AT HANDRAIL JOINT

Details not shown same as "PLAN"

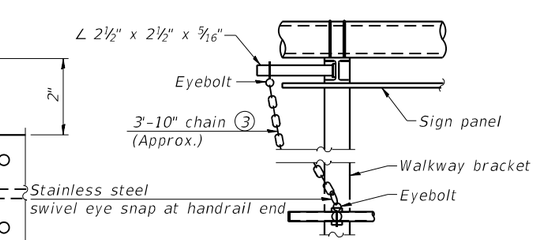

ALTERNATE SAFETY CHAIN ATTACHMENT

Details not shown similar to "Safety Chain" Details

(Walkway omitted for clarity)

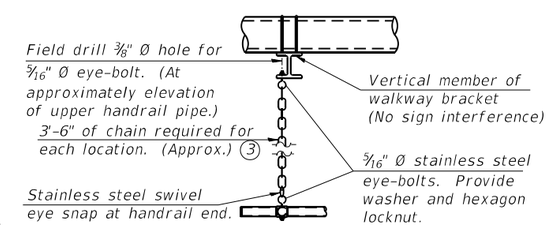

SAFETY CHAIN

One required for each end of each walkway.

(3) 3/16" type 304L stainless steel chain, approximately 12 links per foot.

(4) Extrusions may be used in lieu of the details shown, with approval of the Engineer.

0SF-A-8

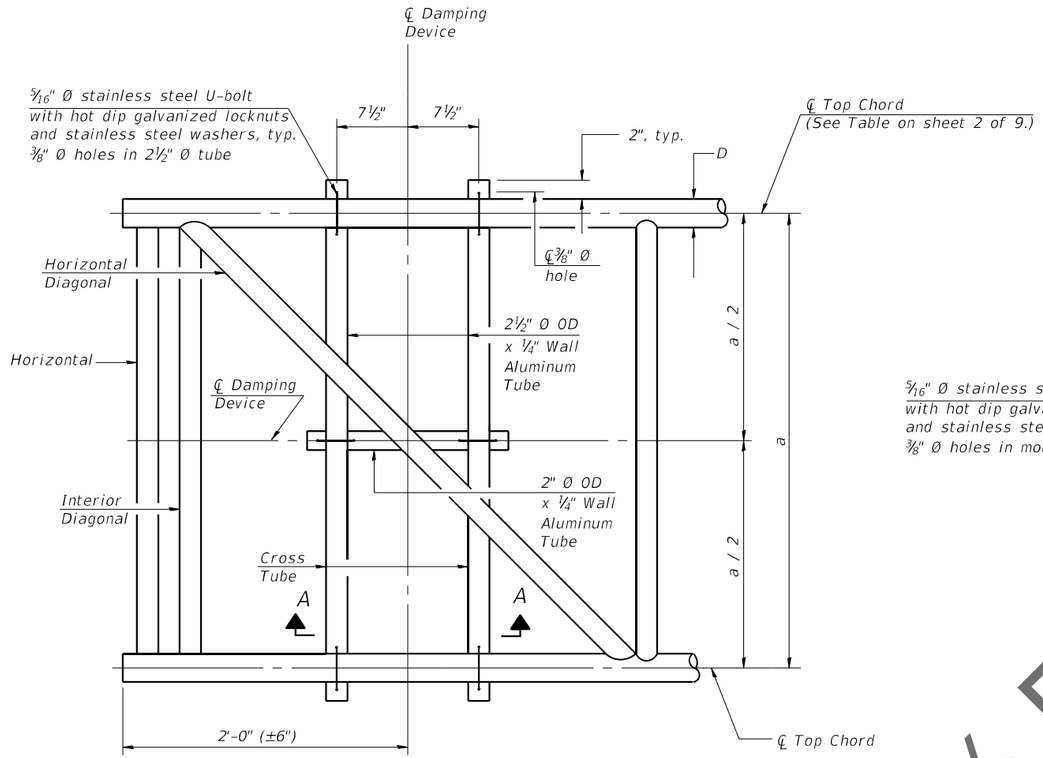

PLAN DETAIL

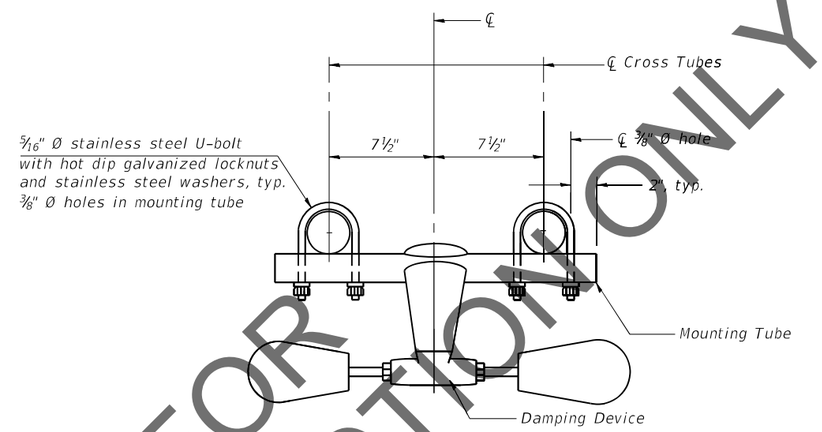

TRUSS DAMPING DEVICE CONNECTION DETAIL

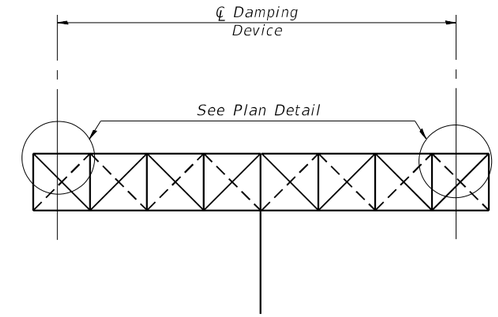

ELEVATION

Aluminum Butterfly Sign Structure

GENERAL NOTES

Damper: One damper per truss. (31 lbs. Stockbridge-Type Aluminum-29" minimum between ends of weights)

Materials: Aluminum tubes shall be ASTM B221 alloy 6061 temper T6

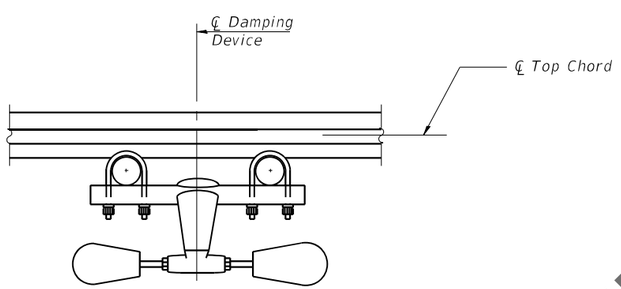

SECTION A-A

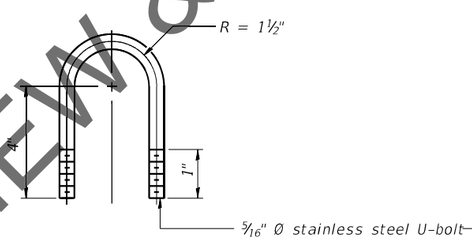

DAMPING DEVICE MOUNTING TUBE U-BOLT DETAIL

(Typical)

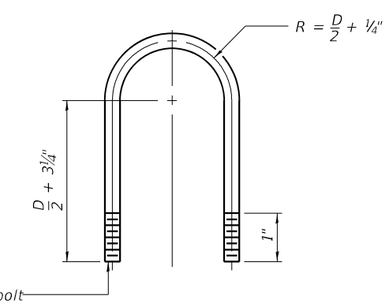

TOP CHORD TO CROSS TUBE U-BOLT DETAIL

(Typical)

OSF-A-D