F.A.I. RTE.	SECTION	COUNTY	TOTAL SHEETS	SHEET NO.
270	60(B)-1	MADISON	860	1
	ILLINOIS	CONTRACT NO. 76J90		

06-17-2022 LETTING ITEM 01X

FOR REVIEW & INSPECTION ONLY

STATE OF ILLINOIS
DEPARTMENT OF TRANSPORTATION

PROPOSED HIGHWAY PLANS

FAI ROUTE 270 (I–270)
SECTION 60B–1
PROJECT NHPP–CRP1(462)
REPLACEMENT OF S.N. 060–0035
MADISON COUNTY

C–98–284–18

D-98-001-18

LOCATION OF SECTION INDICATED THUS: –

INDEX OF SHEETS

1	COVER SHEET
2	GENERAL NOTES, STANDARDS, AND COMMITMENTS
3	SHEET LAYOUT
4-16	SUMMARY OF QUANTITIES
17-24	TYPICAL SECTIONS
25-30	SCHEDULE OF QUANTITIES
31-34	ALIGNMENT, TIES, AND BENCHMARKS
35-42	PLAT OF HIGHWAYS
43-51	PLAN & PROFILE SHEETS
52-131	SUGGESTED MAINTENANCE OF TRAFFIC CONTROL
132-145	EROSION CONTROL PLANS
146-150	DRAINAGE PLANS
151-154	DRAINAGE PROFILES
155-158	REMOVAL PLANS
159-167	PAVEMENT MARKING & SIGNING PLAN
168-174	SIGN DETAILS
175-180	LANDSCAPE PLANS
181-191	LIGHTING AND ITS PLANS
192-200	SIGN STRUCTURE PLANS
201-492	BRIDGE PLANS SN-060-0350
493-780	BRIDGE PLANS SN-060-0351
781-784	MISCELLANEOUS DETAILS
785-860	CROSS SECTIONS

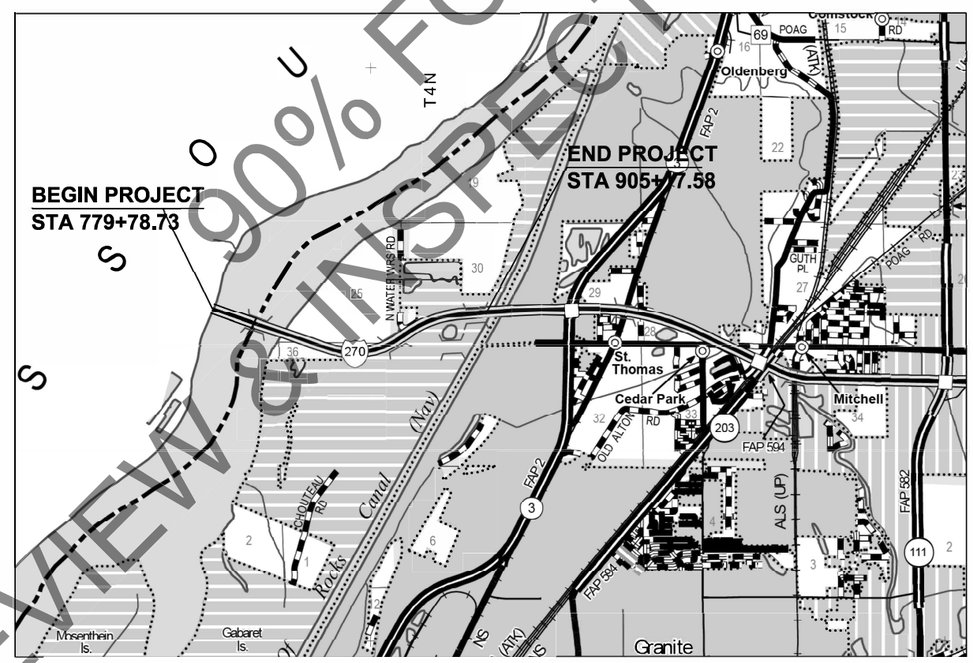

LOCATION MAP

NOT TO SCALE

FUNCTIONAL CLASSIFICATION
FAI 270 = INTERSTATE
ADT = 51,000 (2016); 56,900 (2030)
P.V. = 79.8% S.U. = 2.5% M.U. = 17.7%

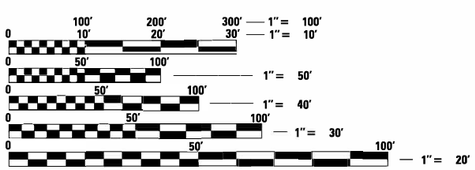

FULL SIZE PLANS HAVE BEEN PREPARED USING STANDARD ENGINEERING SCALES. REDUCED SIZED PLANS WILL NOT CONFORM TO STANDARD SCALES. IN MAKING MEASUREMENTS ON REDUCED PLANS, THE ABOVE SCALES MAY BE USED.

J.U.L.I.E.
JOINT UTILITY LOCATION INFORMATION FOR EXCAVATION
1–800–892–0123
OR 811

GROSS LENGTH = 12,538.85 FT. = 2.375 MILE
NET LENGTH = 12,538.85 FT. = 2.375 MILE

STATE OF ILLINOIS
DEPARTMENT OF TRANSPORTATION

SUBMITTED _____ 20 _____

_____
REGIONAL ENGINEER

_____ 20 _____

_____
ENGINEER OF DESIGN AND ENVIRONMENT

_____ 20 _____

_____
DIRECTOR OF HIGHWAYS PROJECT IMPLEMENTATION

PROJECT ENGINEER: TIFFANY BRASE
PROJECT MANAGER: BILLIE OWEN

CONTRACT NO. 76J90

PRINTED BY THE AUTHORITY OF THE STATE OF ILLINOIS

REVIEW & INSPECTION ONLY 90% FOR

GENERAL NOTES

1. ILLNOIS STATE LAW REQUIRES A 48-HOUR NOTICE BE GIVEN TO ALL UTILITIES BEFORE DIGGING. FIELD MARKING OF UTILITIES MAY BE OBTAINED BY CONTACTING J.U.L.I.E. FOR NON MEMBERS, CONTACT THE UTILITY COMPANY DIRECTLY

   AGENCIES KNOWN TO HAVE FACILITIES WITHIN THE PROJECT AREA:
   * AMEREN ILLINOIS ELECTRIC
   *SPIRE GAS
   IDOT UNDERGROUND ELECTRIC
   * ENABLE - MISSISSIPPI RIVER TRANSMISSION
   * AT&T
   IDOT FIBEROPTIC

   MEMBERS OF J.U.L.I.E. (800) 892-0123 OR 811 INDICATED BY A *.
   NON-MEMBERS MUST BE NOTIFIED INDIVIDUALLY.

2. IF THE CONTRACTOR, FOR HIS CONSTRUCTION ACTIVITY, REMOVES TREES WITHIN THE RIGHT-OF-WAY LIMITS WHICH ARE NOT DESIGNATED ON THE PLANS FOR REMOVAL, I.E. IN ORDER TO GAIN ACCESS TO THE PROJECT SITE; IT WILL BE HIS RESPONSIBILITY TO REPLACE THE TREES AT A 1:1 RATIO. THE TREES WILL BE REPLACED WITH A 1 GALLON NATIVE ILLINOIS TREE SPECIES AND SHALL BE APPROVED BY THE ENGINEER. THE TREE REMOVAL AND TREE REPLACEMENT WILL BE AT THE CONTRACTOR'S EXPENSE, AND NO ADDITIONAL COMPENSATION WILL BE ALLOWED.

3. THE RESIDENT ENGINEER SHALL VERIFY THE EXISTENCE OF HIGHWAY LIGHTING AND/OR INTELLIGENT TRANSPORTATION SYSTEMS (I.T.S.) UTILITIES WITHIN THE PROJECT LIMITS. IF HIGHWAY LIGHTING AND/OR I.T.S. EXISTS WITHIN THE PROJECT LIMITS, AND IF THESE ITEMS REQUIRE LOCATING, THE CONTRACTOR SHALL BE DIRECTED TO DO SO ACCORDING TO SECTION 803 OF THE STANDARD SPECIFICATIONS. THIS WORK SHALL BE PAID FOR ACCORDING TO ARTICLE 109.04 OF THE STANDARD SPECIFICATIONS.

4. COORDINATION WITH THE DEPARTMENT'S BUREAU OF OPERATIONS IS REQUIRED BEFORE ANY TRENCHING SHALL BE DONE TO LOCATE HIGHWAY LIGHTING/PUMP STATION/ INTELLIGENT TRANSPORTATION SYSTEM FACILITIES AND TO COORDINATE OTHER FIELD ACTIVITIES.
   CONTACT JEFFREY ABEL, P.E. AT (618) 346-3283.

5. THE DEPARTMENT STRONGLY ENCOURAGES THE PRIME CONTRACTOR AND THEIR APPROVED SUB-CONTRACTORS TO HIRE MINORITY, WOMEN AND DISADVANTAGED INDIVIDUALS FROM ITS FEDERALLY FUNDED HIGHWAY CONSTRUCTION CAREERS TRAINING PROGRAM (HCCTP) TO HELP MEET WORKFORCE AND TRAINEE GOALS. THIS PROGRAM IS TRAINING MINORITIES, WOMEN AND DISADVANTAGED INDIVIDUALS IN HIGHWAY CONSTRUCTION-RELATED SKILLS, E.G., MATH FOR THE TRADES, JOB READINESS, TECHNICAL SKILLS COURSEWORK (CARPENTRY, CONCRETE FLATWORK, BLUEPRINT READING, SITE PLANS, SITE WORK, TOOLS USE, ETC.) AND OSHA 10 HOUR CERTIFICATION, TO PREPARE THEM FOR A CAREER IN THE HIGHWAY CONSTRUCTION TRADES. GRADUATES ARE WELL-TRAINED AND READY TO BECOME PRODUCTIVE ENTRY-LEVEL CONSTRUCTION WORKERS. CONTACT THE DISTRICT 8 EEO OFFICE AT 618-346-3360 AND/OR THE HCCTP COORDINATOR AT 618-874-6528 TO LEARN MORE ABOUT THE PROGRAM AND FOR ASSISTANCE IN MEETING WORKFORCE AND TRAINEE GOALS.

6. ALL ELEVATIONS REFER TO THE NAVD 88 DATUM.

7 ONLY SHORT TERM PAVEMENT MARKING REMOVAL FROM THE FINAL SURFACE SHALL BE PAID FOR AS "SHORT TERM PAVEMENT MARKING REMOVAL."

8. THE CONTRACTOR SHALL PROVIDE LABOR AND MATERIALS REQUIRED TO IMPRINT PAVEMENT STATION NUMBERS IN THE FINISHED SURFACE OF THE PAVEMENT AND/OR OVERLAY, THE NUMBERS SHALL BE APPROXIMATELY 3/4 INCHES WIDE, 5 INCHES HIGHT, AND 5/8 INCHES DEEP.

   THE PAVEMENT STATION NUMBERS SHALL BE INSTALLED AS SPECIFIED HEREIN:

   INTERVAL 250 FEET

   BOTTOM OF NUMBERS 6 INCHES FROM THE INSIDE EDGE OF THE PAVEMENT MARKING

   LOCATION:
   -2,3,& 5 LANE PAVEMENT RIGHT EDGE OF PAVEMENT IN DIRECTION OF INCREASING STATIONS
   -MULTI-LANE DIVIDED ROADWAYS OUTSIDE EDGE OF PAVEMENT IN BOTH DIRECTIONS
   -RAMPS ALONG BASELINE EDGE OF PAVEMENT

   POSITION STATIONS SHALL BE PLACED SO THEY CAN BE READ FROM THE ADJACENT SHOULDER

   FORMAT "XX+XX", WHERE X REPRESENTS THE PAVEMENT STATION

   THIS WORK WILL NOT BE PAID FOR SEPARATELY, BUT WILL BE CONSIDERED INCLUDED IN THE COST OF THE ASSOCIATED PAVEMENT PAY ITEMS.

9. FACTORS FOR ESTIMATING PLAN QUANTITIES ARE AS FOLLOWS AND SHALL NOT BE USED FOR THE BASIS OF FINAL QUANTITIES:

HOT-MIX ASPHALT	0.056 TON/SQ YD/IN
AGGREGATE (SURFACE, BASE, & BACKFILL)	2.05 TON/CU YD
BITUMINOUS MATERIALS:	
TACK COAT FOR BITUMINOUS CONCRETE:	
-ON PAVEMENT	0.05 LB/SQ FT
-PRIME COAT ON AGGREGATE	0.25 LB/SQ FT
-ON COLD MILLED SURFACE	0.05 LB/SQ FT
-FOG COAT ON NEW BINDER	0.025 LB/SQ FT
AGGREGATE (PRIME COAT)	
-ON EXISTING PAVEMENT	3 LB/SQ YD
-ON COLD MILLED SURFACE	3 LB/SQ YD
-FOG COAT ON NEW BINDER	2 LB/SQ YD
RIP RAP	1.5 TON/CU YD
SEEDING, CLASS 2A, 4A	200 LB/ACRE
TEMPORARY EROSION CONTROL SEEDING	100 LB/ACRE
NITROGEN FERTILIZER NUTRIENT	90 LB/ACRE
PHOSPHORUS FERTILIZER NUTRIENT	90 LB/ACRE
POTASSIUM FERTILIZER NUTRIENT	90 LB/ACRE
MULCH	2 TON/ACRE

10. ALL REMOVED GUARDRAIL COMPONENTS ARE THE PROPERTY OF THE CONTRACTOR AND THE SALVAGE VALUE OF SAID COMPONENTS SHALL BE REFLECTED IN THE CONTRACTOR'S BID.

COMMITMENTS

1. TO PROTECT THE STATE AND FEDERALLY LISTED PALLID STURGEON DURING THE SPAWNING SEASON:

   1. THE USE OF EXPLOSIVES IS PROHIBITED ON THIS CONSTRUCTION CONTRACT AS A METHOD OF DEMOLITION OR CONSTRUCTION.
   2. DURING DEMOLITION, THE SUPERSTRUCTURE SHALL NOT BE DROPPED INTO THE RIVER.
   3. THE USE OF A CUTTERHEAD SHALL BE PROHIBITED AS A DREDGING METHOD. ALL DREDGING ACTIVITIES SHALL UTILIZE EITHER MECHANICAL EXCAVATION OR A DUST BIN.

2. FOR ANY TREE REMOVAL CONDUCTED IN ILLINOIS: TREES THREE (3) INCHES OR GREATER IN DIAMETER AT BREAST HEIGHT SHALL NOT BE CLEARED FROM APRIL 1 THROUGH SEPTEMBER 30 OF ANY GIVEN YEAR.

3. FOR ANY TREE CLEARING CONDUCTED IN MISSOURI: ALL TREES SHALL BE REMOVED BETWEEN THE DATES OF NOVEMBER 1 AND MARCH 31 OF ANY GIVEN YEAR.

4. THE OSAGE NATION HISTORIC PRESERVATION OFFICE HAS REQUESTED A COPY OF THE PLANNED CULTURAL RECONNAISSANCE SURVEY REPORT, IF ONE IS DEEMED NECESSARY.

5. WETLANDS ADJACENT TO THE WORK AREA AND NOT IMPACTED BY THIS PROJECT SHALL BE MARKED BY A FENCE NOT ALLOWING EQUIPMENT ACCESS DURING CONSTRUCTION.

IDOT STANDARDS

000001-08	STANDARD SYMBOLS, ABBREVIATIONS AND PATTERNS
001001-02	AREAS OF REINFORCEMENT BARS
001006	DECIMAL OF AN INCH AND OF A FOOT
280001-07	TEMPORARY EROSION CONTROL SYSTEMS
421001-03	BAR REINFORCEMENT FOR CRC PAVEMENT
421106-10	36' (10.8 m) CRC PAVEMENT (WITH WIDE FLANGE BEAM TERMINAL JOINT)
483001-06	PCC SHOULDER
515001-04	NAME PLATE FOR BRIDGES
542301-03	PRECAST REINFORCED CONCRETE FLARED END SECTION
601001-05	PIPE UNDERDRAINS
601101-02	CONCRETE HEADWALL FOR PIPE UNDERDRAIN
602106-03	DRAINAGE STRUCTURES, TYPES 4 & 5
602401-07	PRECAST MANHOLE TYPE A 4' (1.22 m) DIAMETER
602701-02	MANHOLE STEPS
604001-05	FRAME AND LIDS TYPE 1
604071-07	FRAME AND GRATE TYPE 20
604081-06	FRAME AND GRATES TYPE 22
606001-08	CONCRETE CURB TYPE B AND COMBINATION CONCRETE CURB AND GUTTER
630001-12	STEEL PLATE BEAM GUARDRAIL
631026-06	TRAFFIC BARRIER TERMINAL, TYPE 5
631031-17	TRAFFIC BARRIER TERMINAL, TYPE 6
635001-02	DELINEATORS
637006-05	CONCRETE BARRIER DOUBLE FACE, 44 IN. (1120 mm) HEIGHT
642001-03	SHOULDER RUMBLE STRIPS, 16 IN.
664001-02	CHAIN LINK FENCE
665001-02	WOVEN WIRE FENCE
666001-01	RIGHT-OF-WAY MARKERS
667001-01	DRAINAGE MARKERS
667101-02	PERMANENT SURVEY MARKERS
701101-05	OFF-RD OPERATIONS, MULTILANE,15'(4.5 m)TO 24" (600 mm) FROM PAVEMENT EDGE
701106-02	OFF-RD OPERATIONS, MULTILANE, MORE THAN 15' (4.5 m) AWAY
701331-05	LANE CLOSURE, 2L, 2W, WITH RUN-AROUND, FOR SPEEDS > 45 MPH
701400-11	APPROACH TO LANE CLOSURE, FREEWAY/EXPRESSWAY
701401-13	LANE CLOSURE, FREEWAY/EXPRESSWAY
701402-12	LANE CLOSURE, FREEWAY/EXPRESSWAY, WITH BARRIER
701406-13	LANE CLOSURE, FREEWAY/EXPRESSWAY, DAY OPERATIONS ONLY
701411-09	LANE CLOSURE, MULTILANE, AT ENTRANCE OR EXIT RAMP, FOR SPEEDS > 45 MPH
701431-13	LANE CLOSURE, MULTILANE, UNDIVIDED WITH CROSSOVER, FOR SPEEDS > 45 MPH TO 55 MPH
701451-05	RAMP CLOSURE, FREEWAY/EXPRESSWAY
701456-05	PARTIAL EXIT RAMP CLOSURE, FREEWAY/EXPRESSWAY
701901-08	TRAFFIC CONTROL DEVICES
704001-08	TEMPORARY CONCRETE BARRIER
720001-01	SIGN PANEL MOUNTING DETAILS
720006-04	SIGN PANEL ERECTION DETAILS
720011-01	METAL POSTS FOR SIGNS, MARKERS AND DELINEATORS
720021-03	SIGN PANELS, EXTRUDED ALUMINUM TYPE
729001-01	APPLICATIONS OF TYPES A AND B METAL POSTS (FOR SIGNS & MARKERS)
780001-05	TYPICAL PAVEMENT MARKINGS
781001-04	TYPICAL APPLICATIONS RAISED REFLECTIVE PAVEMENT MARKERS
782006-01	GUARDRAIL AND BARRIER WALL REFLECTOR MOUNTING DETAILS

MIXTURE DESIGNS

MIX DESIGNS	
MIXTURE USES(S):	HOT-MIX ASPHALT STABILIZED SUBBASE
AC/PG:	PG 64-22
RAP% (MAX):	SEE SPEC PROVISIONS
DESIGN AIR VOIDS:	4.0% @ Ndes = 30
MIXTURE COMPOSITION: (GRADATION MIXTURE)	IL 19.0L

REVIEW & INSPECTION ONLY
90% FOR

REV. - MS

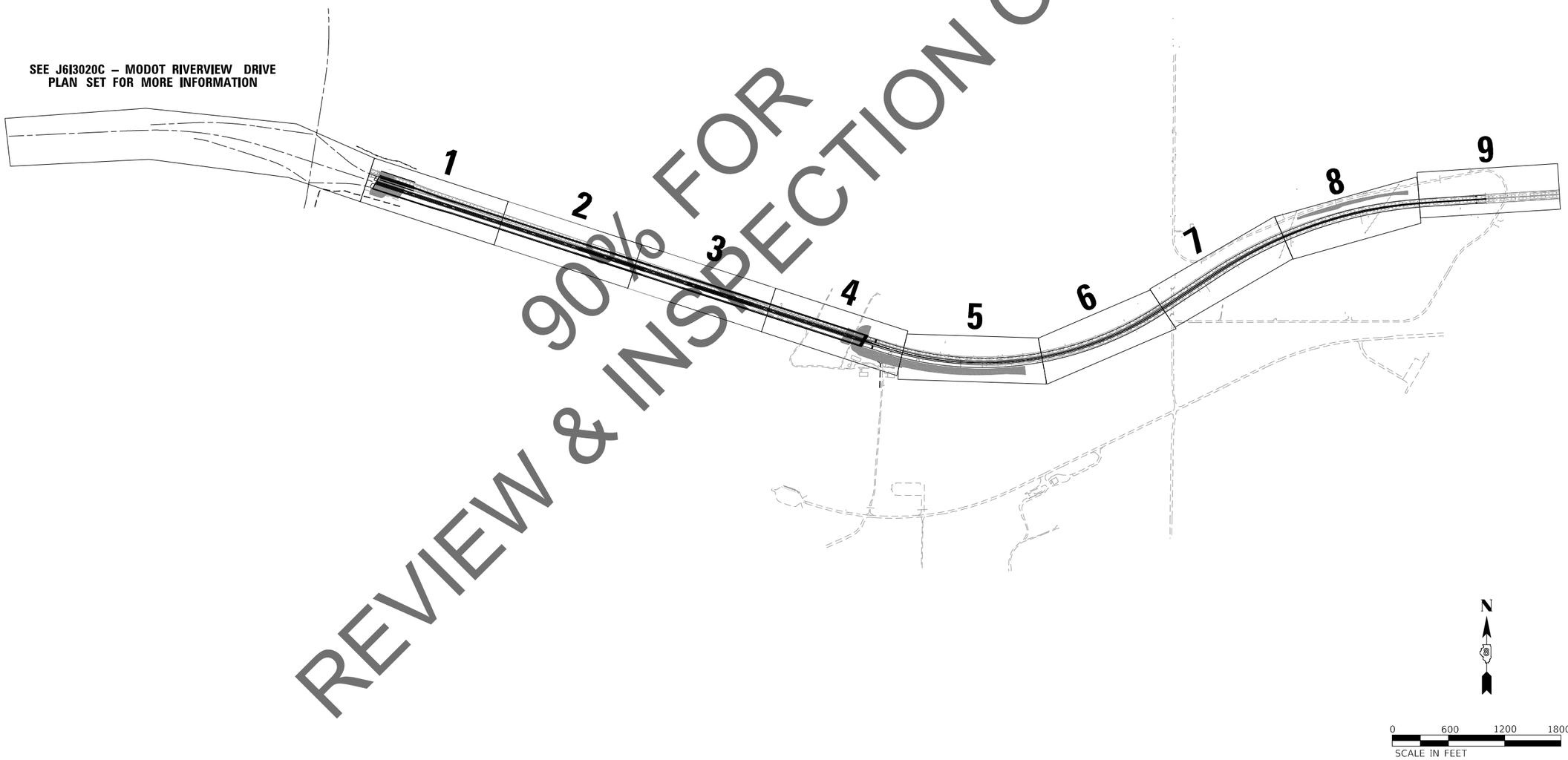

90% FOR
REVIEW & INSPECTION ONLY

MODEL: Default
FILE NAME: C:\CS4PDF\1996145086_26D876190-sht-layout.dgn

HORNER & SHIFRIN
Teaming with: PARSONS

USER NAME = PWICS$	DESIGNED -	REVISED -	
	DRAWN - JEPETTIBONE	REVISED -	
PLOT SCALE = 600.0000 ' / in.	CHECKED -	REVISED -	
PLOT DATE = 11/16/2021	DATE -	REVISED -	

STATE OF ILLINOIS
DEPARTMENT OF TRANSPORTATION

FAI–270
SHEET LAYOUT

SCALE: 1" = 600' | SHEET 1 OF 1 SHEETS | STA. TO STA.

F.A.I. RTE.	SECTION	COUNTY	TOTAL SHEETS	SHEET NO.
270	60(B)-1	MADISON	860	3
		CONTRACT NO. 76J90		
	ILLINOIS	FED. AID PROJECT		

SUMMARY OF QUANTITIES

CODE NO	ITEM	UNIT	TOTAL	CONSTRUCTION CODE		
				ROADWAY 0003 URBAN F.A.I. 270	BRIDGE 0010 URBAN S.N. 060-0350	BRIDGE 0010 URBAN S.N. 060-0351
20100500	TREE REMOVAL, ACRES	ACRE	2.7	2.7		
20200100	EARTH EXCAVATION	CU YD	158295	158295		
20400800	FURNISHED EXCAVATION	CU YD	29630	29630		
20800150	TRENCH BACKFILL	CU YD	2891	2891		
25000305	SEEDING, CLASS 3A	ACRE	25.00	25.00		
25000400	NITROGEN FERTILIZER NUTRIENT	POUND	2221	2221		
25000500	PHOSPHORUS FERTILIZER NUTRIENT	POUND	2221	2221		
25000600	POTASSIUM FERTILIZER NUTRIENT	POUND	2221	2221		
25000700	AGRICULTURAL GROUND LIMESTONE	TON	49.3	49.3		
25100127	MULCH, METHOD 3A	ACRE	49.00	49.00		
25100635	HEAVY DUTY EROSION CONTROL BLANKET	SQ YD	23727	23727		
28000250	TEMPORARY EROSION CONTROL SEEDING	POUND	8935	8935		
28000305	TEMPORARY DITCH CHECKS	FOOT	690	690		
28000400	PERIMETER EROSION BARRIER	FOOT	21905	21905		

90% FOR REVIEW & INSPECTION ONLY

SUMMARY OF QUANTITIES

CODE NO	ITEM	UNIT	TOTAL	CONSTRUCTION CODE		
				ROADWAY 0003 URBAN F.A.I. 270	BRIDGE 0010 URBAN S.N. 060-0350	BRIDGE 0010 URBAN S.N. 060-0351
28000510	INLET FILTERS	EACH	52	52		
28100107	STONE RIPRAP, CLASS A4	SQ YD	10132	10132		
28100111	STONE RIPRAP, CLASS A6	SQ YD	16736		10863	5873
28200200	FILTER FABRIC	SQ YD	19735	19735		
31100910	SUBBASE GRANULAR MATERIAL, TYPE A 12"	SQ YD	71194	71194		
31200100	STABILIZED SUBBASE 4"	SQ YD	71194	71194		
35100700	AGGREGATE BASE COURSE, TYPE A 8"	SQ YD	2275	2275		
42100340	CONTINUOUSLY REINFORCED PORTLAND CEMENT CONCRETE PAVEMENT 12"	SQ YD	39642	39642		
42100615	PAVEMENT REINFORCEMENT	SQ YD	39642	39642		
42101030	WIDE FLANGE BEAM TERMINAL JOINT COMPLETE 36'	EACH	2	2		
42101300	PROTECTIVE COAT	SQ YD	81219	81219		
44000100	PAVEMENT REMOVAL	SQ YD	21801	21801		
44001980	CONCRETE BARRIER REMOVAL	FOOT	2589	2589		
44004250	PAVED SHOULDER REMOVAL	SQ YD	26816	26816		

90% FOR REVIEW & INSPECTION ONLY

SUMMARY OF QUANTITIES

CODE NO	ITEM	UNIT	TOTAL	CONSTRUCTION CODE		
				ROADWAY 0003 URBAN F.A.I. 270	BRIDGE 0010 URBAN S.N. 060-0350	BRIDGE 0010 URBAN S.N. 060-0351
44213200	SAW CUTS	FOOT	7894	7894		
48300700	PORTLAND CEMENT CONCRETE SHOULDERS 12"	SQ YD	33313	33313		
50100100	REMOVAL OF EXISTING STRUCTURES	EACH	1		0.5	0.5
50200100	STRUCTURE EXCAVATION	CU YD	1295		616	679
50300100	FLOOR DRAINS	EACH	24		12	12
50300225	CONCRETE STRUCTURES	CU YD	25458.2		12730.3	12727.9
50300255	CONCRETE SUPERSTRUCTURE	CU YD	21840.2		10948.2	10892
50300280	CONCRETE ENCASEMENT	CU YD	29.4		14.7	14.7
50300300	PROTECTIVE COAT	SQ YD	80565		40392	40173
50301350	CONCRETE SUPERSTRUCTURE (APPROACH SLAB)	CU YD	347		173.5	173.5
50500105	FURNISHING AND ERECTING STRUCTURAL STEEL	L SUM	1		0.502	0.498
50500505	STUD SHEAR CONNECTORS	EACH	195364		98024	97340
50800205	REINFORCEMENT BARS, EPOXY COATED	POUND	22437010		11222680	11214330
50800515	BAR SPLICERS	EACH	248		124	124

90% FOR REVIEW & INSPECTION ONLY

SUMMARY OF QUANTITIES

CODE NO	ITEM	UNIT	TOTAL	CONSTRUCTION CODE		
				ROADWAY 0003 URBAN F.A.I. 270	BRIDGE 0010 URBAN S.N. 060-0350	BRIDGE 0010 URBAN S.N. 060-0351
50800530	MECHANICAL SPLICERS	EACH	14948		7502	7446
51201610	FURNISHING STEEL PILES HP12X63	FOOT	4196		2097	2099
51201710	FURNISHING STEEL PILES HP12X84	FOOT	2260		1140	1120
51202305	DRIVING PILES	FOOT	6456		3237	3219
51203610	TEST PILE STEEL HP12X63	EACH	2		1	1
51203710	TEST PILE STEEL HP12X84	EACH	4		2	2
51204650	PILE SHOES	EACH	84		42	42
51500100	NAME PLATES	EACH	2		1	1
51602000	PERMANENT CASING	FOOT	8854		4405	4449
* 51603000	DRILLED SHAFT IN SOIL	CU YD	20137		10017	10120
* 51604000	DRILLED SHAFT IN ROCK	CU YD	7000		3500	3500
52000110	PREFORMED JOINT STRIP SEAL	FOOT	255		127.5	127.5
52100010	ELASTOMERIC BEARING ASSEMBLY, TYPE I	EACH	52		26	26
52100030	ELASTOMERIC BEARING ASSEMBLY, TYPE III	EACH	74		37	37

* SPECIALTY ITEM

90% FOR REVIEW & INSPECTION ONLY

SUMMARY OF QUANTITIES

CODE NO	ITEM	UNIT	TOTAL	CONSTRUCTION CODE		
				ROADWAY 0003 URBAN F.A.I. 270	BRIDGE 0010 URBAN S.N. 060-0350	BRIDGE 0010 URBAN S.N. 060-0351
52100530	ANCHOR BOLTS, 1 1/4"	EACH	820		410	410
52100540	ANCHOR BOLTS, 1 1/2"	EACH	168		84	84
52100560	ANCHOR BOLTS, 2"	EACH	300		152	148
52200010	TEMPORARY SHEET PILING	SQ FT	945			945
54001001	BOX CULVERT END SECTIONS, CULVERT NO. 1	EACH	1	1		
54213663	PRECAST REINFORCED CONCRETE FLARED END SECTIONS 18"	EACH	3	3		
54213669	PRECAST REINFORCED CONCRETE FLARED END SECTIONS 24"	EACH	5	5		
542A0223	PIPE CULVERTS, CLASS A, TYPE 1 18"	FOOT	61	61		
550A0360	STORM SEWERS, CLASS A, TYPE 2 15"	FOOT	1259	1259		
550A0380	STORM SEWERS, CLASS A, TYPE 2 18"	FOOT	1515	1515		
550A0410	STORM SEWERS, CLASS A, TYPE 2 24"	FOOT	2633	2633		
55100700	STORM SEWER REMOVAL 15"	FOOT	924	924		
55101200	STORM SEWER REMOVAL 24"	FOOT	761	761		
58600101	GRANULAR BACKFILL FOR STRUCTURES	CU YD	675		340	335

90% FOR REVIEW & INSPECTION ONLY

SUMMARY OF QUANTITIES

CODE NO	ITEM	UNIT	TOTAL	CONSTRUCTION CODE		
				ROADWAY 0003 URBAN F.A.I. 270	BRIDGE 0010 URBAN S.N. 060-0350	BRIDGE 0010 URBAN S.N. 060-0351
58700300	CONCRETE SEALER	SQ FT	52618		26225	26393
59100100	GEOCOMPOSITE WALL DRAIN	SQ YD	378		189	189
60100060	CONCRETE HEADWALLS FOR PIPE DRAINS	EACH	34	34		
60108106	PIPE UNDERDRAINS, TYPE 1, 6"	FOOT	22686	22686		
60108300	PIPE UNDERDRAINS 8" (SPECIAL)	FOOT	680	680		
60218400	MANHOLES, TYPE A, 4'-DIAMETER, TYPE 1 FRAME, CLOSED LID	EACH	7	7		
60270050	DRAINAGE STRUCTURES, TYPE 4 WITH TWO TYPE 20 FRAME AND GRATES	EACH	28	28		
60270055	DRAINAGE STRUCTURES, TYPE 5 WITH TWO TYPE 22 FRAME AND GRATES	EACH	4	4		
60500040	REMOVING MANHOLES	EACH	3	3		
60500050	REMOVING CATCH BASINS	EACH	2	2		
60500060	REMOVING INLETS	EACH	5	5		
* 63000001	STEEL PLATE BEAM GUARDRAIL, TYPE A, 6 FOOT POSTS	FOOT	13990	13990		
* 63100070	TRAFFIC BARRIER TERMINAL, TYPE 5	EACH	2	2		
* 63100085	TRAFFIC BARRIER TERMINAL, TYPE 6	EACH	2	2		

* SPECIALTY ITEM

90% FOR REVIEW & INSPECTION ONLY

SUMMARY OF QUANTITIES

	CODE NO	ITEM	UNIT	TOTAL	CONSTRUCTION CODE		
					ROADWAY 0003 URBAN F.A.I. 270	BRIDGE 0010 URBAN S.N. 060-0350	BRIDGE 0010 URBAN S.N. 060-0351
	63200310	GUARDRAIL REMOVAL	FOOT	23147	23147		
*	63500105	DELINEATORS	EACH	58	58		
	63700280	CONCRETE BARRIER, DOUBLE FACE, 44 INCH HEIGHT	FOOT	5837	5837		
	63700380	CONCRETE BARRIER, VARIABLE CROSS SECTION 44 INCH HEIGHT	FOOT	1153	1153		
	63700805	CONCRETE BARRIER TRANSITION	FOOT	46	46		
	63700900	CONCRETE BARRIER BASE	FOOT	7035	7035		
	64200116	SHOULDER RUMBLE STRIPS, 16 INCH	FOOT	24250	24250		
	64300260	IMPACT ATTENUATORS (FULLY REDIRECTIVE, NARROW), TEST LEVEL 3	EACH	2	2		
	66400205	CHAIN LINK FENCE, 5'	FOOT	150	150		
	66406500	CHAIN LINK GATES, 5' X 8' DOUBLE	EACH	1	1		
	66500105	WOVEN WIRE FENCE, 4'	FOOT	4709	4709		
	66501200	WOVEN WIRE GATES, 4' X 8' DOUBLE	EACH	1	1		
	66600105	FURNISHING AND ERECTING RIGHT OF WAY MARKERS	EACH	8	8		
	66700205	PERMANENT SURVEY MARKERS, TYPE I	EACH	14	14		

* SPECIALTY ITEM

90% FOR REVIEW & INSPECTION ONLY

SUMMARY OF QUANTITIES

	CODE NO	ITEM	UNIT	TOTAL	CONSTRUCTION CODE		
					ROADWAY 0003 URBAN F.A.I. 270	BRIDGE 0010 URBAN S.N. 060-0350	BRIDGE 0010 URBAN S.N. 060-0351
	66700705	FURNISHING AND ERECTING DRAINAGE MARKERS	EACH	4	4		
	67000400	ENGINEER'S FIELD OFFICE, TYPE A	CAL MO	60	60		
	67100100	MOBILIZATION	L SUM	1.0	1		
	70200100	NIGHTTIME WORK ZONE LIGHTING	L SUM	440000	440000.0		
	70300100	SHORT TERM PAVEMENT MARKING	FOOT	172063	172063		
	70400100	TEMPORARY CONCRETE BARRIER	FOOT	42240	42240		
	70400200	RELOCATE TEMPORARY CONCRETE BARRIER	FOOT	21270	21270		
	70600250	IMPACT ATTENUATORS, TEMPORARY (NON- REDIRECTIVE), TEST LEVEL 3	EACH	3	3		
	70600350	IMPACT ATTENUATORS, RELOCATE (NON- REDIRECTIVE), TEST LEVEL 3	EACH	8	8		
*	72000200	SIGN PANEL - TYPE 2	SQ FT	59	59		
*	72000300	SIGN PANEL - TYPE 3	SQ FT	2542.25	2542.25		
*	72400310	REMOVE SIGN PANEL - TYPE 1	SQ FT	165	165		
*	72400320	REMOVE SIGN PANEL - TYPE 2	SQ FT	59	59		
*	72400330	REMOVE SIGN PANEL - TYPE 3	SQ FT	1312.75	1312.75		

* SPECIALTY ITEM

90% FOR REVIEW & INSPECTION ONLY

SUMMARY OF QUANTITIES

	CODE NO	ITEM	UNIT	TOTAL	CONSTRUCTION CODE		
					ROADWAY 0003 URBAN F.A.I. 270	BRIDGE 0010 URBAN S.N. 060-0350	BRIDGE 0010 URBAN S.N. 060-0351
*	72400710	RELOCATE SIGN PANEL - TYPE 1	SQ FT	18	18		
*	72400720	RELOCATE SIGN PANEL - TYPE 2	SQ FT	20	20		
*	72400730	RELOCATE SIGN PANEL - TYPE 3	SQ FT	360	360		
*	72600100	MILE POST MARKER ASSEMBLY	EACH	22	22		
*	72700100	STRUCTURAL STEEL SIGN SUPPORT - BREAKAWAY	POUND	9818.5	9818.5		
*	73000100	WOOD SIGN SUPPORT	FOOT	52	52		
*	73301810	OVERHEAD SIGN STRUCTURE WALKWAY, TYPE A	FOOT	20.5	20.5		
*	733XXXXXX	OVERHEAD SIGN STRUCTURE BUTTERFLY TYPE II-F-A	FOOT	20.5	20.5		
*	73400100	CONCRETE FOUNDATIONS	CU YD	24.28	24.28		
	73700200	REMOVE CONCRETE FOUNDATION - GROUND MOUNT	EACH	26	26		
*	78003110	PREFORMED PLASTIC PAVEMENT MARKING, TYPE B - LINE 4"	FOOT	63058	63058		
*	78100100	RAISED REFLECTIVE PAVEMENT MARKER	EACH	1252	1252		
*	78200005	GUARDRAIL REFLECTORS, TYPE A	EACH	40	40		
*	78200010	BARRIER WALL REFLECTORS, TYPE B	EACH	120	120		

* SPECIALTY ITEM

90% FOR REVIEW & INSPECTION ONLY

SUMMARY OF QUANTITIES

	CODE NO	ITEM	UNIT	TOTAL	CONSTRUCTION CODE		
					ROADWAY 0003 URBAN F.A.I. 270	BRIDGE 0010 URBAN S.N. 060-0350	BRIDGE 0010 URBAN S.N. 060-0351
*	78200011	BARRIER WALL REFLECTORS, TYPE C	EACH	370	370		
*	81028240	UNDERGROUND CONDUIT, GALVANIZED STEEL, 4" DIA.	FOOT	320	320		
*	81028350	UNDERGROUND CONDUIT, PVC, 2" DIA.	FOOT	400	400		
*	81200230	CONDUIT EMBEDDED IN STRUCTURE, 2" DIA., PVC	FOOT	21600		10800	10800
*	81400700	HANDHOLE, PORTLAND CEMENT CONCRETE	EACH	4	4		
*	81603112	UNIT DUCT, 600V, 2-1C NO.6, 1/C NO.8 GROUND, (XLP-TYPE USE), 1 1/4" DIA. POLYETHYLENE	FOOT	14125	14125		
*	81702120	ELECTRIC CABLE IN CONDUIT, 600V (XLP-TYPE USE) 1/C NO. 8	FOOT	12050		6025	6025
*	81702130	ELECTRIC CABLE IN CONDUIT, 600V (XLP-TYPE USE) 1/C NO. 6	FOOT	24100		12050	12050
*	82110008	LUMINAIRE, LED, ROADWAY, OUTPUT DESIGNATION H	EACH	145			
*	83060450	LIGHT POLE, GALVANIZED STEEL, 45 FT. M.H., 15 FT. MAST ARM	EACH	59		30	29
*	83060550	LIGHT POLE, GALVANIZED STEEL, 50 FT. M.H., 15 FT. MAST ARM	EACH	71	70		1
*	83600300	LIGHT POLE FOUNDATION, 30" DIAMETER	FOOT	71	70		1
*	81400700	HANDHOLE, PORTLAND CEMENT CONCRETE	EACH	4	4		
*	84200500	REMOVAL OF LIGHTING UNIT, SALVAGE	EACH	90	90		

* SPECIALTY ITEM

90% FOR REVIEW & INSPECTION ONLY

SUMMARY OF QUANTITIES

	CODE NO	ITEM	UNIT	TOTAL	CONSTRUCTION CODE		
					ROADWAY 0003 URBAN F.A.I. 270	BRIDGE 0010 URBAN S.N. 060-0350	BRIDGE 0010 URBAN S.N. 060-0351
	84200600	REMOVAL OF LIGHTING UNIT, NO SALVAGE	EACH	44		22	22
	84200804	REMOVAL OF POLE FOUNDATION	EACH	92	92		
*	X0320023	CLOSED CIRCUIT TELEVISION DOME CAMERA, HD	EACH	7310	7310		
	X0320051	CROSSHOLE SONIC LOGGING ACCESS DUCTS	FOOT	11868		5912	5956
	X0320052	CROSSHOLE SONIC LOGGING TESTING	EACH	150		75	75
	X0322916	PROPOSED STORM SEWER CONNECTION TO EXISTING STORM SEWER	EACH	1	1		
	X0322936	REMOVE EXISTING FLARED END SECTION	EACH	18	18		
*	X0324256	FIBER OPTIC CABLE SPLICE	EACH	1	1		
*	X0327121	CAMERA POLE, 55 FT	EACH	2	2		
	X0327357	CONSTRUCTION VIBRATION MONITORING	L SUM	1		0.5	0.5
	X0900020	THERMAL INTEGRITY PROFILE TESTING	EACH	150		75	75
	X0900044	THERMAL INTEGRITY PROFILE DATA COLLECTION	FOOT	11868		5912	5956
*	X1400006	FIBER OPTIC CABLE IN CONDUIT, 12 FIBERS, SINGLE MODE	FOOT	11170	11170		
	X1400308	REMOVE CCTV CAMERA	EACH	2	2		

* SPECIALTY ITEM

90% FOR REVIEW & INSPECTION ONLY

SUMMARY OF QUANTITIES

CODE NO	ITEM	UNIT	TOTAL	CONSTRUCTION CODE		
				ROADWAY 0003 URBAN F.A.I. 270	BRIDGE 0010 URBAN S.N. 060-0350	BRIDGE 0010 URBAN S.N. 060-0351
X1500006	BITUMINOUS SURFACE TREATMENT, A3	SQ YD	2275	2275		
X2080250	TRENCH BACKFILL, SPECIAL	CU YD	7310	7310		
X4202005	DIAMOND GRINDING AND GROOVING (ROADWAY SECTION)	SQ YD	40740	40740		
X4400110	TEMPORARY PAVEMENT REMOVAL	SQ YD	23544	23544		
X5030250	BRIDGE DECK GROOVING (LONGITUDINAL)	SQ YD	46030		23084	22946
X5210240	HIGH LOAD MULTI-ROTATIONAL BEARINGS, GUIDED EXPANSION, 900K	EACH	26		13	13
X5210345	HIGH LOAD MULTI-ROTATIONAL BEARINGS, FIXED - 550K	EACH	28		14	14
X5210375	HIGH LOAD MULTI-ROTATIONAL BEARINGS, FIXED - 850K	EACH	108		54	54
X5210380	HIGH LOAD MULTI-ROTATIONAL BEARINGS, FIXED - 900K	EACH	49		25	24
X6015000	REMOVE CONCRETE HEADWALLS FOR PIPE DRAINS	EACH	34	34		
X6650202	WOVEN WIRE FENCE REMOVAL	FOOT	4196	4196		
X7010216	TRAFFIC CONTROL AND PROTECTION, (SPECIAL)	L SUM	1	1		
X7030030	WET REFLECTIVE TEMPORARY TAPE TYPE III, 4 INCH	FOOT	59220	59220		
* X7830070	GROOVING FOR RECESSED PAVEMENT MARKING 5"	FOOT	63058	63058		

* SPECIALTY ITEM

90% FOR REVIEW & INSPECTION ONLY

SUMMARY OF QUANTITIES

CODE NO	ITEM	UNIT	TOTAL	CONSTRUCTION CODE		
				ROADWAY 0003 URBAN F.A.I. 270	BRIDGE 0010 URBAN S.N. 060-0350	BRIDGE 0010 URBAN S.N. 060-0351
XXXXXXXX	HIGH LOAD MULTI-ROTATIONAL BEARINGS, GUIDED EXPANSION, 850K	EACH	48		24	24
XXXXXXXX	MODULAR EXPANSION JOINT 27"	FOOT	232		116	116
XXXXXXXX	WIDE FLANGE BEAM TERMINAL JOINT COMPLETE 12'	EACH	2	2		
Z0004552	APPROACH SLAB REMOVAL	SQ YD	224	224		
Z0018002	DRAINAGE SCUPPERS, DS-11	EACH	165		84	81
Z0029090	DIAMOND GRINDING (BRIDGE SECTION)	SQ YD	66537		33363	33174
Z0034396	MODULAR EXPANSION JOINT 12"	FOOT	132		66	66.0
Z0034500	MODULAR EXPANSION JOINT 18"	FOOT	116		58	58
Z0040530	PIPE UNDERDRAIN REMOVAL	FOOT	23366	23366		
Z0046304	PIPE UNDERDRAINS FOR STRUCTURES 4"	FOOT	349		174.0	175.0
Z0062456	TEMPORARY PAVEMENT	SQ YD	23544	23544		
Z0076870	UNDERDRAIN CONNECTION TO STRUCTURE	EACH	40	40		

90% FOR REVIEW & INSPECTION ONLY

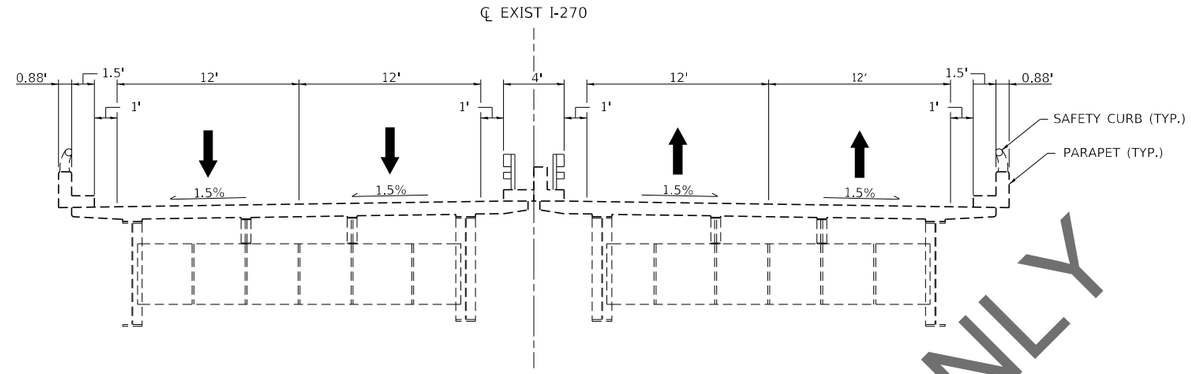

EXISTING F.A.I. ROUTE 270

F.A.I. 270 EX ℄ STA 780+01.28 TO STA 834+09.63

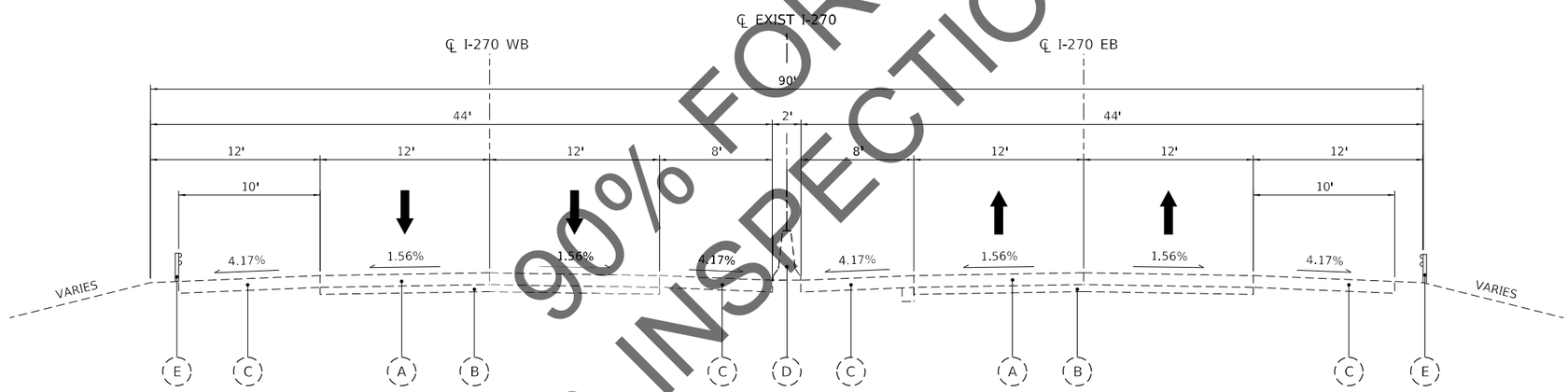

EXISTING F.A.I. ROUTE 270

F.A.I. 270 EX ℄ STA 834+09.63 TO STA 845+81.49

90% FOR REVIEW & INSPECTION ONLY

EXISTING LEGEND

- (A) EXISTING PORTLAND CEMENT CONCRETE PAVEMENT
- (B) EXISTING STABILIZED SUBBASE
- (C) EXISTING SHOULDER
- (D) EXISTING CONCRETE BARRIER DOUBLE FACE 42" HEIGHT
- (E) EXISTING GUARDRAIL

PROPOSED LEGEND

- (1) CONTINUOUSLY REINFORCED PORTLAND CEMENT CONCRETE PAVEMENT 12"
- (2) STABILIZED SUBBASE - (HMA) 4"
- (3) SUBBASE GRANULAR MATERIAL, TYPE A 12"
- (4) PORTLAND CEMENT CONCRETE SHOULDERS 12"
- (5) PIPE UNDER DRAINS, TYPE 1, 6"
- (6) CONCRETE BARRIER, DOUBLE FACE, 44" HEIGHT (WITH MONOLITHIC PCC BASE)
- (7) STEEL PLATE BEAM GUARDRAIL TYPE A 6' POSTS
- (8) GUARDRAIL REFLECTORS, TYPE A
- (9) BARRIER WALL REFLECTORS, TYPE C

MODEL: Default
FILE NAME: C:\CS4PDF\994845086_25\D676J90-sht-typical.dgn

HORNER & SHIFRIN
Teaming with: PARSONS

USER NAME = PWICS$	DESIGNED -	REVISED -	
	DRAWN -	REVISED -	
PLOT SCALE = 5.0000 ' / in.	CHECKED -	REVISED -	
PLOT DATE = 11/16/2021	DATE -	REVISED -	

STATE OF ILLINOIS
DEPARTMENT OF TRANSPORTATION

FAI–270
EXISTING TYPICAL SECTIONS

SCALE: 1"=5' | SHEET 1 OF 8 SHEETS | STA. TO STA.

F.A.I. RTE.	SECTION	COUNTY	TOTAL SHEETS	SHEET NO.
270	60(B)-1	MADISON	860	17

CONTRACT NO. 76J90

ILLINOIS | FED. AID PROJECT

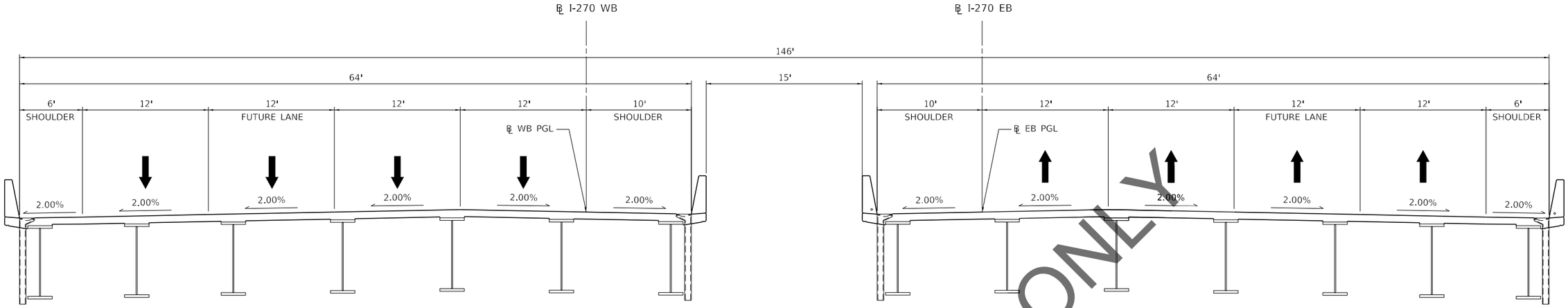

PROPOSED F.A.I. ROUTE 270

EB F.A.I. 270 ℄ STA 1779+78.40 TO STA 1784+08.73

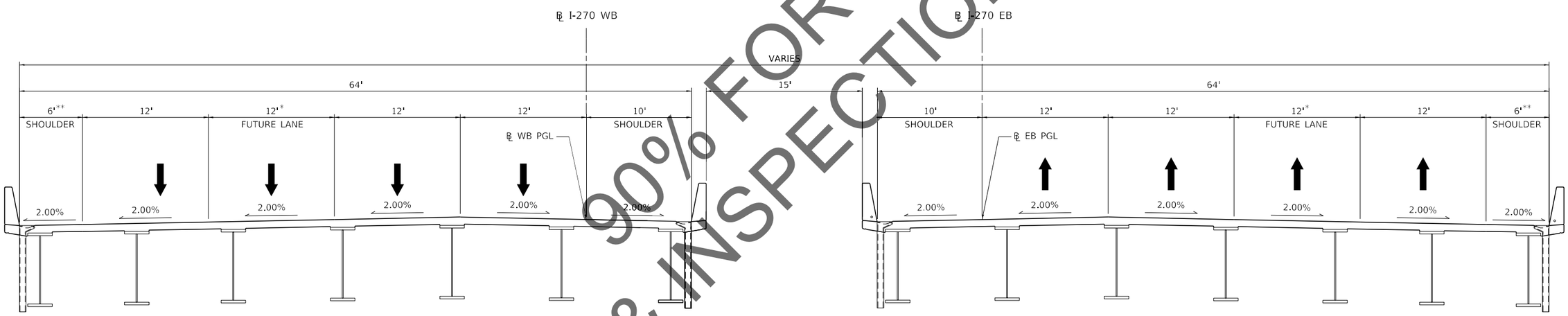

PROPOSED F.A.I. ROUTE 270

EB F.A.I. 270 ℄ STA 1784+08.73 TO STA 1788+74.29
* WB VARIES 12'-0' ℄ STA 2784+08.73 TO STA 2786+56.72
* EB VARIES 12'-0' ℄ STA 1785+74.53 TO STA 1788+74.29
** WB VARIES 6'-10' ℄ STA 2784+08.73 TO STA 2786+56.72
** EB VARIES 6'-10' ℄ STA 1785+74.53 TO STA 1788+74.29

NOTES

FINAL ROADWAY PLANS ARE DESIGNED FOR THE ULTIMATE 6-LANE CONFIGURATION IN ANTICIPATION OF PROJECT APPROVAL OF CURRENT 6-LANE STUDY FOR I-270 PRIOR TO PS&E.

REVIEW & INSPECTION ONLY
90% FOR

EXISTING LEGEND

- (A) EXISTING PORTLAND CEMENT CONCRETE PAVEMENT
- (B) EXISTING STABILIZED SUBBASE
- (C) EXISTING SHOULDER
- (D) EXISTING CONCRETE BARRIER DOUBLE FACE 42" HEIGHT
- (E) EXISTING GUARDRAIL

PROPOSED LEGEND

- (1) CONTINUOUSLY REINFORCED PORTLAND CEMENT CONCRETE PAVEMENT 12"
- (2) STABILIZED SUBBASE - (HMA) 4"
- (3) SUBBASE GRANULAR MATERIAL, TYPE A 12"
- (4) PORTLAND CEMENT CONCRETE SHOULDERS 12"
- (5) PIPE UNDER DRAINS, TYPE 1, 6"
- (6) CONCRETE BARRIER, DOUBLE FACE, 44" HEIGHT (WITH MONOLITHIC PCC BASE)
- (7) STEEL PLATE BEAM GUARDRAIL TYPE A 6' POSTS
- (8) GUARDRAIL REFLECTORS, TYPE A
- (9) BARRIER WALL REFLECTORS, TYPE C

MODEL: Default
FILE NAME: C:\ICS4PDF\994845086_25\D676J90-sht-typical.dgn

HORNER & SHIFRIN
Teaming with: PARSONS

USER NAME = PWICS$	DESIGNED -	REVISED -	
	DRAWN -	REVISED -	
PLOT SCALE = 5.0000 ' / in.	CHECKED -	REVISED -	
PLOT DATE = 11/16/2021	DATE -	REVISED -	

STATE OF ILLINOIS
DEPARTMENT OF TRANSPORTATION

FAI–270
PROPOSED TYPICAL SECTIONS

SCALE: 1"=5' | SHEET 4 OF 8 SHEETS | STA. TO STA.

F.A.I. RTE.	SECTION	COUNTY	TOTAL SHEETS	SHEET NO.
270	60(B)-1	MADISON	860	18
		CONTRACT NO. 76J90		
		ILLINOIS FED. AID PROJECT		

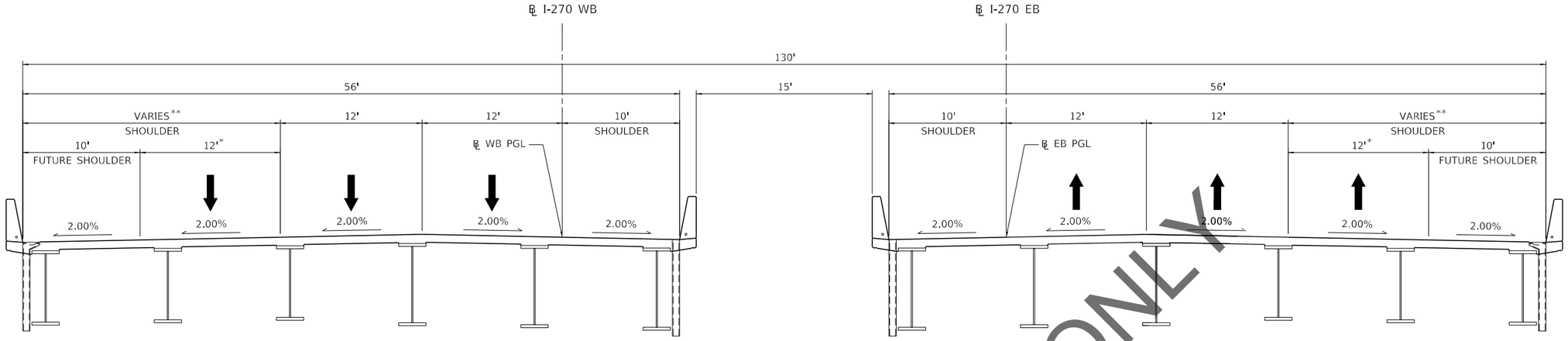

PROPOSED F.A.I. ROUTE 270

EB F.A.I. 270 ℄ STA 1788+74.29 TO STA 1834+13.82
*12' LANE ℄ STA 1788+74.29 TO STA 1826+82.20
*FUTURE LANE VARIES 0'-12' ℄ STA 1826+82.20 TO STA 1834+13.82
**10' ℄ STA 1788+74.29 TO STA 1826+82.20
**VARIES 10'-20' ℄ STA 1826+82.20 TO STA 1834+13.82

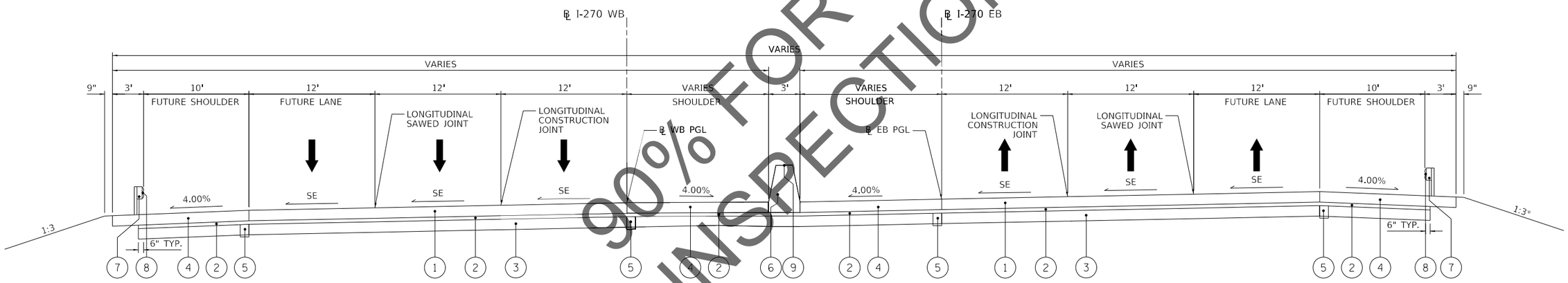

PROPOSED F.A.I. ROUTE 270

EB F.A.I. 270 ℄ STA 1834+13.82 TO STA 1869+73.48
* RIGHT SHOULDER ℄ STA 1839+14.00 TO STA 1842+33.00
* RIGHT SHOULDER ℄ STA 1851+10.00 TO STA 1869+73.48
** RIGHT SHOULDER ℄ STA 1834+13.82 TO STA 1839+14.00
** RIGHT SHOULDER ℄ STA 1842+33.00 TO STA 1851+10.00

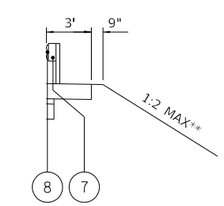

NOTES

FINAL ROADWAY PLANS ARE DESIGNED FOR THE ULTIMATE 6-LANE CONFIGURATION IN ANTICIPATION OF PROJECT APPROVAL OF CURRENT 6-LANE STUDY FOR I-270 PRIOR TO PS&E.

EXISTING LEGEND

- (A) EXISTING PORTLAND CEMENT CONCRETE PAVEMENT
- (B) EXISTING STABILIZED SUBBASE
- (C) EXISTING SHOULDER
- (D) EXISTING CONCRETE BARRIER DOUBLE FACE 42" HEIGHT
- (E) EXISTING GUARDRAIL

PROPOSED LEGEND

- (1) CONTINUOUSLY REINFORCED PORTLAND CEMENT CONCRETE PAVEMENT 12"
- (2) STABILIZED SUBBASE - (HMA) 4"
- (3) SUBBASE GRANULAR MATERIAL, TYPE A 12"
- (4) PORTLAND CEMENT CONCRETE SHOULDERS 12"
- (5) PIPE UNDER DRAINS, TYPE 1, 6"
- (6) CONCRETE BARRIER, DOUBLE FACE, 44" HEIGHT (WITH MONOLITHIC PCC BASE)
- (7) STEEL PLATE BEAM GUARDRAIL TYPE A 6' POSTS
- (8) GUARDRAIL REFLECTORS, TYPE A
- (9) BARRIER WALL REFLECTORS, TYPE C

REVIEW & INSPECTION ONLY
90% FOR

MODEL: Default
FILE NAME: C:\ICS4PDF\994845086_25\D676J90-sht-typical.dgn

HORNER & SHIFRIN
Teaming with: PARSONS

USER NAME = PWICS$	DESIGNED -	REVISED -	
	DRAWN -	REVISED -	
PLOT SCALE = 5.0000 ' / in.	CHECKED -	REVISED -	
PLOT DATE = 11/16/2021	DATE -	REVISED -	

STATE OF ILLINOIS
DEPARTMENT OF TRANSPORTATION

FAI–270
PROPOSED TYPICAL SECTIONS

SCALE: 1"=5' | SHEET 5 OF 8 SHEETS | STA. TO STA.

F.A.I. RTE.	SECTION	COUNTY	TOTAL SHEETS	SHEET NO.
270	60(B)-1	MADISON	860	19
		CONTRACT NO. 76J90		
		ILLINOIS FED. AID PROJECT		

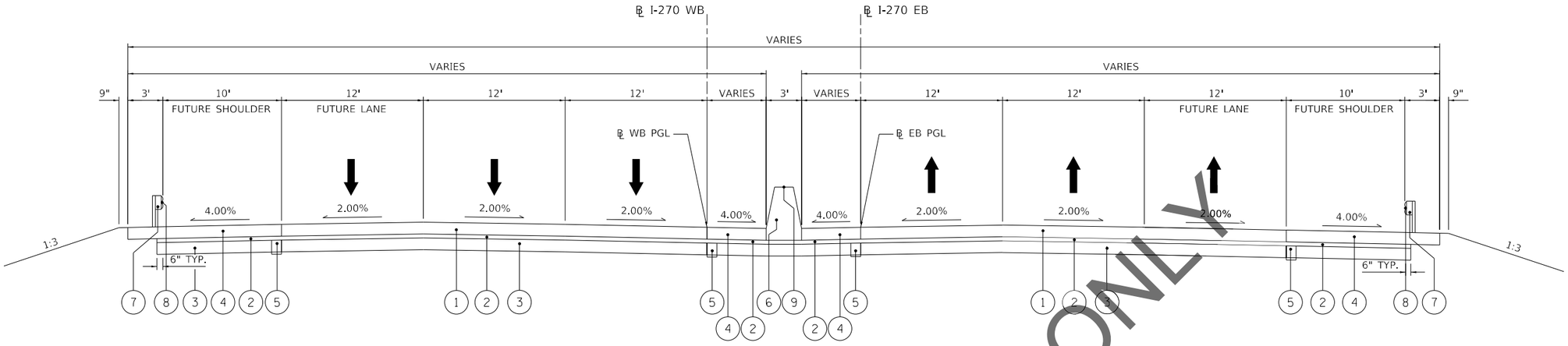

PROPOSED F.A.I. ROUTE 270

EB F.A.I. 270 ℄ STA 1869+73.48 TO STA 1872+50.20

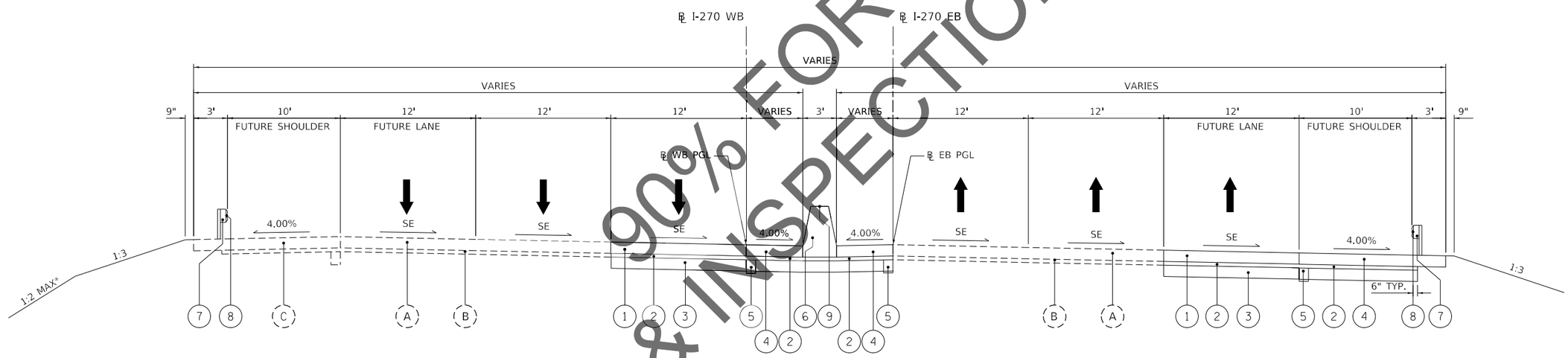

PROPOSED F.A.I. ROUTE 270

EB F.A.I. 270 ℄ STA 1872+50.20 TO STA 1884+79.50
* LEFT SHOULDER STA 1885+00.00 TO STA 1891+96.63

NOTES

FINAL ROADWAY PLANS ARE DESIGNED FOR THE ULTIMATE 6-LANE CONFIGURATION IN ANTICIPATION OF PROJECT APPROVAL OF CURRENT 6-LANE STUDY FOR I-270 PRIOR TO PS&E.

EXISTING LEGEND

- (A) EXISTING PORTLAND CEMENT CONCRETE PAVEMENT
- (B) EXISTING STABILIZED SUBBASE
- (C) EXISTING SHOULDER
- (D) EXISTING CONCRETE BARRIER DOUBLE FACE 42" HEIGHT
- (E) EXISTING GUARDRAIL

PROPOSED LEGEND

- (1) CONTINUOUSLY REINFORCED PORTLAND CEMENT CONCRETE PAVEMENT 12"
- (2) STABILIZED SUBBASE - (HMA) 4"
- (3) SUBBASE GRANULAR MATERIAL, TYPE A 12"
- (4) PORTLAND CEMENT CONCRETE SHOULDERS 12"
- (5) PIPE UNDER DRAINS, TYPE 1, 6"
- (6) CONCRETE BARRIER, DOUBLE FACE, 44" HEIGHT (WITH MONOLITHIC PCC BASE)
- (7) STEEL PLATE BEAM GUARDRAIL TYPE A 6' POSTS
- (8) GUARDRAIL REFLECTORS, TYPE A
- (9) BARRIER WALL REFLECTORS, TYPE C

90% FOR REVIEW & INSPECTION ONLY

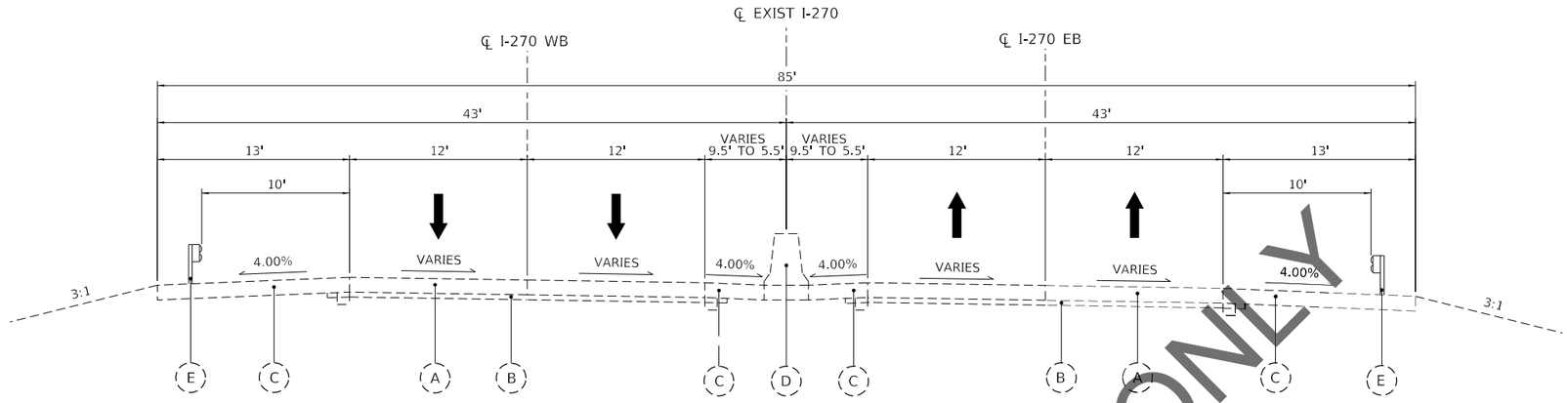

EXISTING F.A.I. ROUTE 270

F.A.I. 270 EX ℄ STA 891+94.85 TO STA 899+38.39

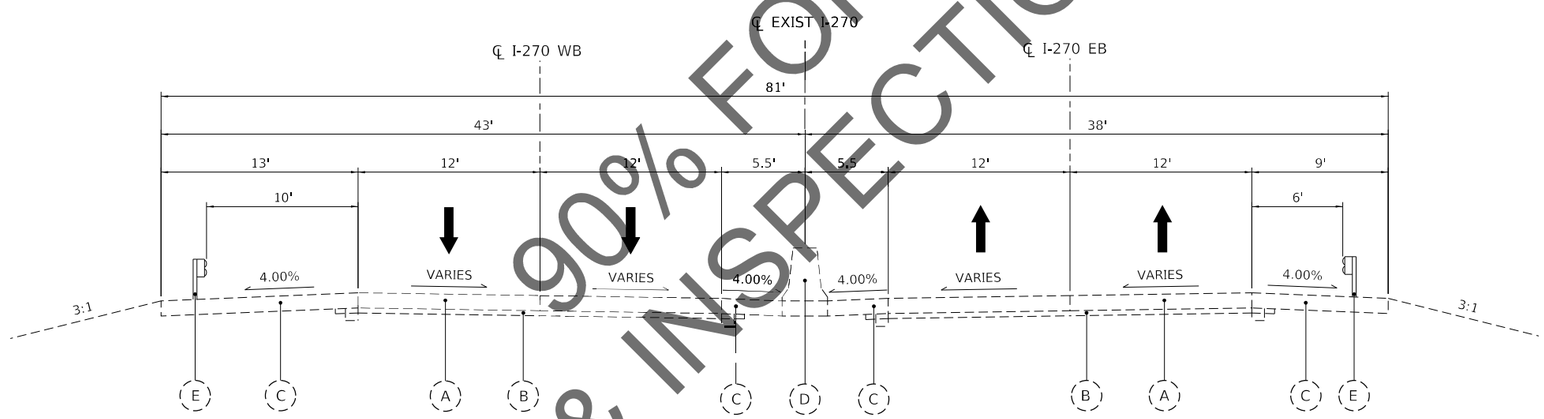

EXISTING F.A.I. ROUTE 270

F.A.I. 270 EX ℄ STA 899+38.39 TO STA 905+17.58

REVIEW & INSPECTION ONLY
90% FOR

EXISTING LEGEND

- (A) EXISTING PORTLAND CEMENT CONCRETE PAVEMENT
- (B) EXISTING STABILIZED SUBBASE
- (C) EXISTING SHOULDER
- (D) EXISTING CONCRETE BARRIER DOUBLE FACE 42" HEIGHT
- (E) EXISTING GUARDRAIL

PROPOSED LEGEND

- (1) CONTINUOUSLY REINFORCED PORTLAND CEMENT CONCRETE PAVEMENT 12"
- (2) STABILIZED SUBBASE - (HMA) 4"
- (3) SUBBASE GRANULAR MATERIAL, TYPE A 12"
- (4) PORTLAND CEMENT CONCRETE SHOULDERS 12"
- (5) PIPE UNDER DRAINS, TYPE 1, 6"
- (6) CONCRETE BARRIER, DOUBLE FACE, 44" HEIGHT (WITH MONOLITHIC PCC BASE)
- (7) STEEL PLATE BEAM GUARDRAIL TYPE A 6' POSTS
- (8) GUARDRAIL REFLECTORS, TYPE A
- (9) BARRIER WALL REFLECTORS, TYPE C

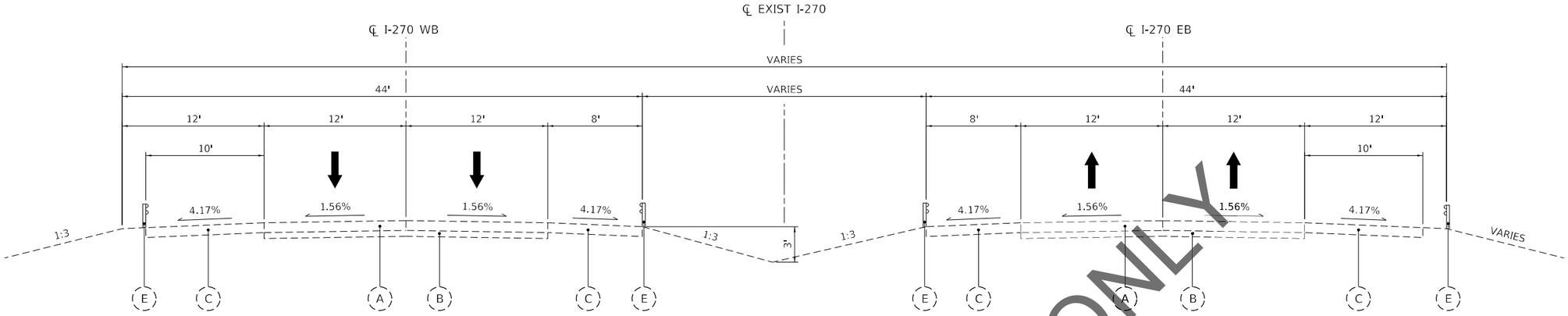

EXISTING F.A.I. ROUTE 270

F.A.I. 270 EX ℄ STA 845+81.49 TO STA 869+43.00

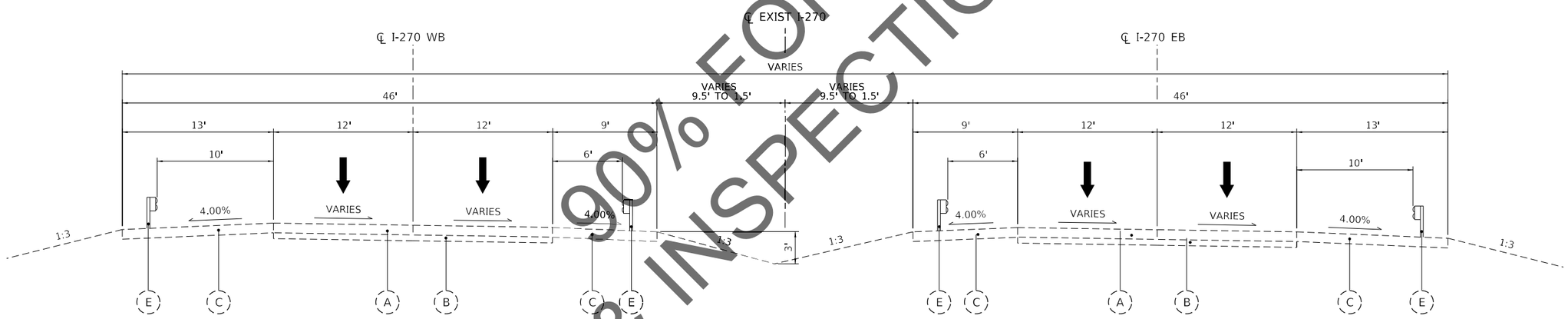

EXISTING F.A.I. ROUTE 270

F.A.I. 270 EX ℄ STA 869+43.00 TO STA 891+94.85

90% FOR REVIEW & INSPECTION ONLY

EXISTING LEGEND

- (A) EXISTING PORTLAND CEMENT CONCRETE PAVEMENT
- (B) EXISTING STABILIZED SUBBASE
- (C) EXISTING SHOULDER
- (D) EXISTING CONCRETE BARRIER DOUBLE FACE 42" HEIGHT
- (E) EXISTING GUARDRAIL

PROPOSED LEGEND

- (1) CONTINUOUSLY REINFORCED PORTLAND CEMENT CONCRETE PAVEMENT 12"
- (2) STABILIZED SUBBASE - (HMA) 4"
- (3) SUBBASE GRANULAR MATERIAL, TYPE A 12"
- (4) PORTLAND CEMENT CONCRETE SHOULDERS 12"
- (5) PIPE UNDER DRAINS, TYPE 1, 6"
- (6) CONCRETE BARRIER, DOUBLE FACE, 44" HEIGHT (WITH MONOLITHIC PCC BASE)
- (7) STEEL PLATE BEAM GUARDRAIL TYPE A 6' POSTS
- (8) GUARDRAIL REFLECTORS, TYPE A
- (9) BARRIER WALL REFLECTORS, TYPE C

MODEL: Default
FILE NAME: C:\PCS4PDF\994845086_25\D876J90-sht-typical.dgn

HORNER & SHIFRIN
Teaming with: PARSONS

USER NAME = PWICS$	DESIGNED -	REVISED -
	DRAWN -	REVISED -
PLOT SCALE = 5.0000 ' / in.	CHECKED -	REVISED -
PLOT DATE = 11/16/2021	DATE -	REVISED -

STATE OF ILLINOIS
DEPARTMENT OF TRANSPORTATION

FAI–270
EXISTING TYPICAL SECTIONS

SCALE: 1"=5' | SHEET 2 OF 8 SHEETS | STA. TO STA.

F.A.I. RTE.	SECTION	COUNTY	TOTAL SHEETS	SHEET NO.
270	60(B)-1	MADISON	860	22

CONTRACT NO. 76J90

ILLINOIS | FED. AID PROJECT

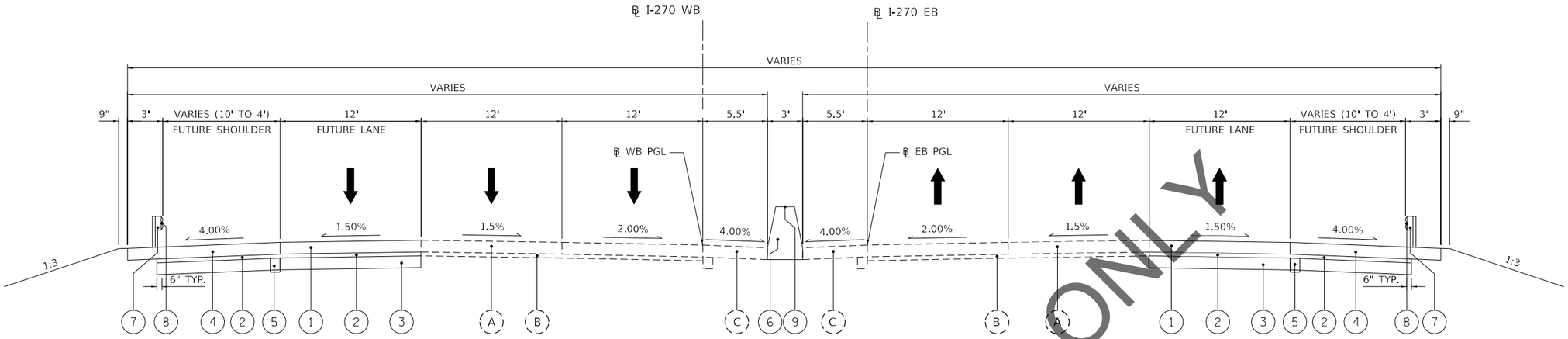

PROPOSED F.A.I. ROUTE 270

EB F.A.I. 270 ℄ STA 1899+38.39 TO STA 1905+17.58

90% FOR REVIEW & INSPECTION ONLY

NOTES

FINAL ROADWAY PLANS ARE DESIGNED FOR THE ULTIMATE 6-LANE CONFIGURATION IN ANTICIPATION OF PROJECT APPROVAL OF CURRENT 6-LANE STUDY FOR I-270 PRIOR TO PS&E.

EXISTING LEGEND

- (A) EXISTING PORTLAND CEMENT CONCRETE PAVEMENT
- (B) EXISTING STABILIZED SUBBASE
- (C) EXISTING SHOULDER
- (D) EXISTING CONCRETE BARRIER DOUBLE FACE 42" HEIGHT
- (E) EXISTING GUARDRAIL

PROPOSED LEGEND

- (1) CONTINUOUSLY REINFORCED PORTLAND CEMENT CONCRETE PAVEMENT 12"
- (2) STABILIZED SUBBASE - (HMA) 4"
- (3) SUBBASE GRANULAR MATERIAL, TYPE A 12"
- (4) PORTLAND CEMENT CONCRETE SHOULDERS 12"
- (5) PIPE UNDER DRAINS, TYPE 1, 6"
- (6) CONCRETE BARRIER, DOUBLE FACE, 44" HEIGHT (WITH MONOLITHIC PCC BASE)
- (7) STEEL PLATE BEAM GUARDRAIL TYPE A 6' POSTS
- (8) GUARDRAIL REFLECTORS, TYPE A
- (9) BARRIER WALL REFLECTORS, TYPE C

MODEL: Default
FILE NAME: C:\PCS4PDF\99484\45086_25\D876J90-sht-typical.dgn

HORNER & SHIFRIN
Teaming with: PARSONS

USER NAME = PWICS$	DESIGNED -	REVISED -
	DRAWN -	REVISED -
PLOT SCALE = 5.0000 ' / in.	CHECKED -	REVISED -
PLOT DATE = 11/16/2021	DATE -	REVISED -

STATE OF ILLINOIS
DEPARTMENT OF TRANSPORTATION

FAI–270
PROPOSED TYPICAL SECTIONS

SCALE: 1"=5' | SHEET 8 OF 8 SHEETS | STA. TO STA.

F.A.I. RTE.	SECTION	COUNTY	TOTAL SHEETS	SHEET NO.
270	60(B)-1	MADISON	860	23
		CONTRACT NO. 76J90		
		ILLINOIS	FED. AID PROJECT	

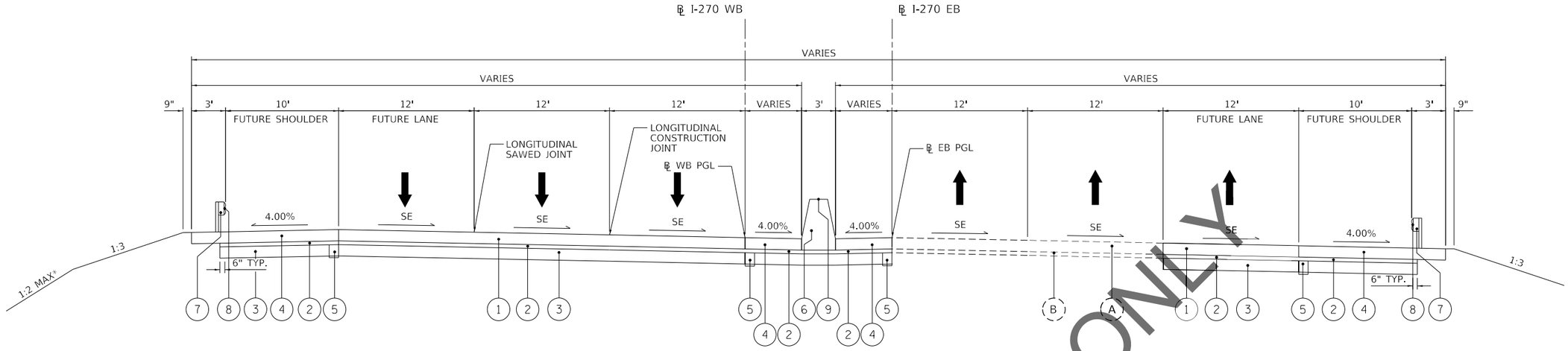

PROPOSED F.A.I. ROUTE 270

EB F.A.I. 270 ℄ STA 1884+79.50 TO STA 1891+99.50
* LEFT SHOULDER STA 1885+00.00 TO STA 1891+96.63

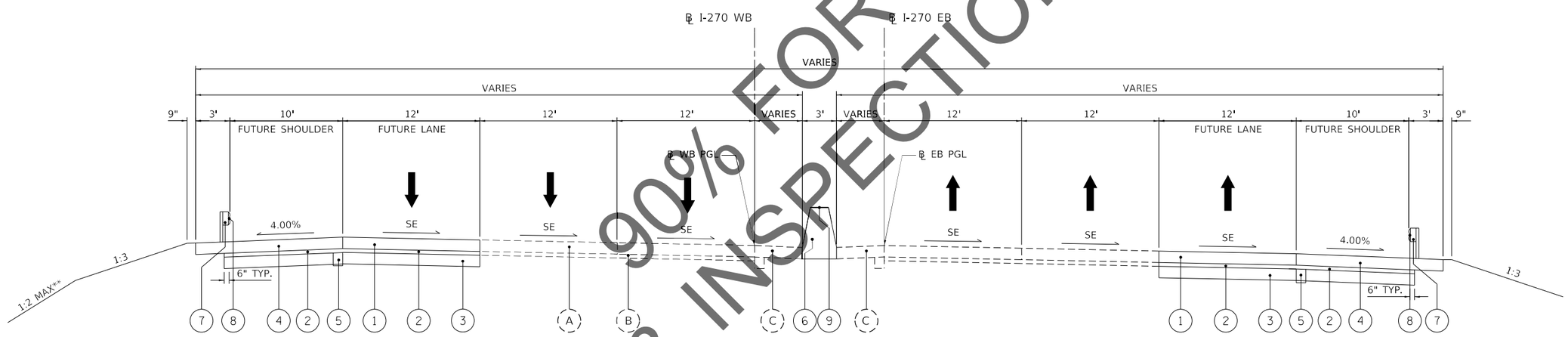

PROPOSED F.A.I. ROUTE 270

EB F.A.I. 270 ℄ STA 1891+99.50 TO STA 1899+38.39
** LEFT SHOULDER STA 1891+86.63 TO STA 1897+00.00

NOTES

FINAL ROADWAY PLANS ARE DESIGNED FOR THE ULTIMATE 6-LANE CONFIGURATION IN ANTICIPATION OF PROJECT APPROVAL OF CURRENT 6-LANE STUDY FOR I-270 PRIOR TO PS&E.

REVIEW & INSPECTION ONLY
90% FOR

EXISTING LEGEND

- (A) EXISTING PORTLAND CEMENT CONCRETE PAVEMENT
- (B) EXISTING STABILIZED SUBBASE
- (C) EXISTING SHOULDER
- (D) EXISTING CONCRETE BARRIER DOUBLE FACE 42" HEIGHT
- (E) EXISTING GUARDRAIL

PROPOSED LEGEND

- (1) CONTINUOUSLY REINFORCED PORTLAND CEMENT CONCRETE PAVEMENT 12"
- (2) STABILIZED SUBBASE - (HMA) 4"
- (3) SUBBASE GRANULAR MATERIAL, TYPE A 12"
- (4) PORTLAND CEMENT CONCRETE SHOULDERS 12"
- (5) PIPE UNDER DRAINS, TYPE 1, 6"
- (6) CONCRETE BARRIER, DOUBLE FACE, 44" HEIGHT (WITH MONOLITHIC PCC BASE)
- (7) STEEL PLATE BEAM GUARDRAIL TYPE A 6' POSTS
- (8) GUARDRAIL REFLECTORS, TYPE A
- (9) BARRIER WALL REFLECTORS, TYPE C

PAVING

LOCATION					CONTINUOUSLY REINFORCED PORTLAND CEMENT CONCRETE PAVEMENT	PAVEMENT REINFORCEMENT	PORTLAND CEMENT CONCRETE SHOULDERS 12"	SHOULDER RUMBLE STRIPS, 16"	SUBBASE GRANULAR MATERIAL, TYPE 12"	STABILIZED SUBBASE 4"	AGGREGATE BASE COURSE, TYPE A 8"	BITUMINOUS SURFACE TREATMENT, A3	DIAMOND GRINDING AND GROOVING (ROADWAY SECTION)	PROTECTIVE COAT
STATION				SIDE	SQ YD	SQ YD	SQ YD	FOOT	SQ YD	SQ YD	SQ YD	SQ YD	SQ YD	SQ YD
FAI - 270 EB	1835+69.33	TO	1872+50.16	RT	14788.7	14,788.7							14,788.7	14,788.7
	1872+50.16	TO	1904+10.13	RT	4188	4,188.0							4,188.0	4,188.0
	1834+61.68	TO	1905+10.12	RT			10,095.2	7,062.3						10,095.2
	1834+69.33	TO	1891+99.45	LT			7,417.9	5,729.6						7,417.9
	1834+61.68	TO	1872+50.16	BOTH					25,357.7	25,357.7				
	1872+50.16	TO	1905+10.14	RT					7,859.3	7,859.3				
	1872+50.16	TO	1891+99.45	LT					2,244.3	2,244.3				
FAI - 270 WB	2835+98.40	TO	2872+37.75	LT	14492.9	14,492.9							14,492.9	14,492.9
	2872+37.75	TO	2884+71.97	LT	1647.2	1,647.2							1,647.2	1,647.2
	2884+71.97	TO	2891+94.85	LT	2902.0	2,902.0							2,902.0	2,902.0
	2891+94.85	TO	2904+07.62	LT	1623.1	1,623.1							1,623.1	1,623.1
	2834+90.75	TO	2891+94.85	RT			7,622.2	5,704.6						7,622.2
	2834+98.41	TO	2872+37.76	LT			5,344.6	3,706.4						5,344.6
	2884+72.54	TO	2905+07.91	LT			2,832.3	2,046.9						2,832.3
	2834+90.75	TO	2872+37.75	BOTH					24,899.1	24,899.1				
	2872+37.75	TO	2884+71.97	RT					3,366.6	3,366.6				
	2884+71.97	TO	2891+94.85	BOTH					4,495.1	4,495.1				
	2891+94.85	TO	2905+07.91	LT					2,971.8	2,971.8				
LEVEE ROAD	1+93.44	TO	22+40.65								2,274.7			
	1+93.44	TO	22+40.65									2,274.7		
				TOTAL	39,642	39,642	33,313	24,250	71,194	71,194	2,275	2,275	39,642	72,955

SAWCUTS

LOCATION					SAW CUTS
STATION				SIDE	FOOT
FAI - 270 EB	1872+50.16	TO	---	RT	24
	1872+50.16	TO	1891+99.45	LT	1,949
	1891+99.45	TO	---	LT	9
	1872+50.16	TO	1905+10.24	RT	3,248
FAI - 270 WB	2872+37.76	TO	---	LT	37
	2872+37.76	TO	2884+71.87	LT	1,237
	2884+71.87	TO	---	LT	37
	5891+94.85	TO	---	LT	37
	5891+94.85	TO	2905+07.91	LT	1,316
				TOTAL	7,894

MARKERS

LOCATION				FURNISHING AND ERECTING RIGHT OF WAY MARKERS	FURNISHING AND ERECTING DRAINAGE MARKERS	PERMANENT SURVEY MARKERS, TYPE I
	STATION	SIDE	OFFSET	EACH	EACH	EACH
FAI - 270 EB	1819+00.00	RT	121.31	1		
	1832+37.15	RT	170.52	1		
	1832+41.05	RT	126.59	1		
	1836+84.24	RT	176.35		1	
	1837+36.71	RT	181.60		1	
	1837+52.77	RT	421.43		1	
	1837+82.51	RT	412.65		1	
	1835+00.00	POT				1
	1836+60.01	PC				1
	1868+00.58	PT				1
	1875+03.97	PC				1
	1899+03.64	PT				1
	1905+00.00	POT				1
FAI - 270 WB	1822+25.00	LT	121.47	1		
	2832+85.73	LT	111.32	1		
	2833+03.80	LT	286.16	1		
	2834+19.29	LT	285.05	1		
	2834+11.55	LT	210.12	1		
	2835+00.00	POT				1
	2837+14.45	PC				1
	2867+06.17	PT				1
	2874+51.08	PC				1
	2884+71.97	PCC				1
	2891+94.85	PCC				1
	2898+40.28	PT				1
	2905+00.00	POT				1
			TOTAL	8	4	14

CONCRETE BARRIER

LOCATION					CONCRETE BARRIER, DOUBLE FACE, 44" HEIGHT	CONCRETE BARRIER TRANSITION	CONCRETE BARRIER, VARRIABLE CROSS SECTION 44" HEIGHT	CONCRETE BARRIER BASE	PROTECTIVE COAT
STATION				SIDE	FOOT	FOOT	FOOT	FOOT	SQ YD
FAI - 270 EB	1834+71.80	TO	1835+78.50	LT	106.8			106.8	107.4
	1835+78.50	TO	1836+14.50	LT		36.0		36.0	44.2
	1836+14.50	TO	1837+25.00	LT	110.5			110.5	111.1
	1838+25.00	TO	1875+00.00	LT	3,662.9			3,662.9	3,683.3
	1875+00.00	TO	1885+50.00	LT			1,152.4	1,152.4	1,244.6
	1886+50.00	TO	1905+00.20	LT	1,852.6			1,852.6	1,862.9
	1905+00.20	TO	1905+10.20	LT		10.0		10.0	9.9
FAI - 270 WB	2834+88.32	TO	2835+91.85	RT	103.7			103.7	104.3
				TOTAL	5,837	46	1,153	7,035	7,168

FENCE

LOCATION					WOVEN WIRE FENCE, 4 FT	WOVEN WIRE GATES, 4' x 8' DOUBLE	WOVEN WIRE FENCE REMOVAL	CHAIN LINK FENCE, 5 FT	CHAIN LINK GATES, 5' X 8' DOUBLE
STATION				SIDE	FOOT	EACH	FOOT	FOOT	EACH
FAI - 270 EB	1833+52.78	TO	1833+80.84	RT	198.3				
	1833+81.74	TO	1833+80.84	RT			111		
	1836+64.89	TO	1843+52.70	RT	735.1		803		
	1860+19.59	TO	1867+94.41	RT	835.2				
	1860+19.59	TO	1867+07.20	RT			821		
	1902+08.25	TO	1905+16.85	RT	550.0		509		
	1867+94.41	TO	1868+07.20	RT		1			
FAI - 270 WB	2835+66.16	TO	2836+17.06	0+00.00	439				
	2882+00.00	TO	2901+00.00	0+00.00	1,951		1,950		
LEVEE ROAD	1+93.70	TO	2+63.52	RT				75	
	1+92.70	TO	2+57.57	LT				75	
	1+93.26								1
				TOTAL	4,709	1	4,196	150	1

WIDE FLANGE BEAMS

LOCATION				WIDE FLANGE BEAMS TERMINAL JOINT COMPLETE 12'	WIDE FLANGE BEAMS TERMINAL JOINT COMPLETE 36'	DIAMOND GRINDING AND GROOVING (ROADWAY SECTION)	PROTECTIVE COAT
STATION				EACH	EACH	SQ YD	SQ YD
FAI - 270 EB	1834+69.30	TO	1835+69.30		1	415.3	415.3
	1904+10.20	TO	1905+10.20	1		133.3	133.3
FAI - 270 WB	2834+98.40	TO	2835+98.40		1	415.4	415.4
	2904+07.80	TO	2905+07.80	1		133.3	133.3
			TOTAL	2	2	1,098	1,098

GUARDRAIL

LOCATION					STEEL PLATE BEAM GUARDRAIL, TYPE A, 6 FOOT POSTS	TRAFFIC BARRIER TERMINAL, TYPE 5	TRAFFIC BARRIER TERMINAL, TYPE 6	IMPACT ATTENUATORS (FULLY REDIRECTIVE, NARROW), TEST LEVEL 3	GUARDRAIL REFLECTORS, TYPE A
STATION				SIDE	FOOT	EACH	EACH	EACH	EACH
FAI - 270 EB	1834+50.57	TO	1834+63.82	RT		1			
	1834+63.82	TO	1904+79.95	RT	7,033.5				20
	1904+79.95	TO	1905+18.85	RT			1		
	1837+25.00	TO	1837+50.00	LT				1	
	1838+00.00	TO	1838+25.00	LT				1	
FAI - 270 WB	2834+89.54	TO	2835+28.44	LT					
	2835+28.44	TO	2905+01.44	LT	6,955.7				20
	2905+01.44	TO	2905+14.63	LT		1			
				TOTAL	13,990	2	2	2	40

FERTILIZER

LOCATION				NITROGEN NUTRIENT FERTILIZER	PHOSPHORUS FERTILIZER NUTRIENT	POTASSIUM FERILIZER NUTRIENT	AGRICULTURAL GROUND LIMESTONE
STATION				POUND	POUND	POUND	TON
FAI - 270 EB	1833+38	TO	1842+14	65	65	65	1.4
	1843+63	TO	7209+67.00	1,490	1,490	1,490	33.1
FAI - 270 WB	28+33+70	TO	2835+01	4	4	4	0.1
	2835+01		2871+27	212	212	212	4.7
	2875+89	TO	2905+50	450	450	450	10.0
			TOTAL	2,221	2,221	2,221	49.3

EARTHWORK

LOCATION					EMBANKMENT VOLUME REQUIRED	EXCAVATION	FURNISHED EXCAVATION
STATION				SIDE	CU YD	CU YD	CU YD
FAI - 270 EB	1835+00.00	TO	1905+00.00	BOTH	148,110	157,790	
LEVEE ROAD	1+93.26	TO	0+00.00	BOTH	239	505	
							29,630
				TOTAL	148,350	158,295	29,630

90% FOR REVIEW & INSPECTION ONLY

DRAINAGE REMOVAL SCHEDULE

STATION			55100700 STORM SEWER REMOVAL 15" FOOT	55101200 STORM SEWER REMOVAL 24" FOOT	60500040 REMOVING MANHOLES EACH	60500050 REMOVING CATCH BASINS EACH	60500060 REMOVING INLETS EACH	X0322936 REMOVE EXISTING FLARED END SECTION EACH	X6015000 REMOVE CONCRETE HEADWALLS FOR PIPE DRAINS EACH	Z0040530 PIPE UNDERDRAIN REMOVAL FOOT
I-270 EB										
1837+67.75, 85.55' RT	TO	1837+70.26, 42.63' LT	128							
1837+70.26, 42.63' LT	TO	1839+16.31, 40.97' LT	144							
1840+72.40, 36.22' RT	TO	1840+72.35, 39.23' LT	75							
1840+72.35, 39.23' LT	TO	1842+23.39, 37.54' LT	149							
1845+30.72, 108.44' RT	TO	1845+28.23, 29.04' LT	137							
1845+28.23, 29.04' LT	TO	1846+25.89, 27.66' LT	97							
1854+29.99, 25.10' RT	TO	1854+30.70, 42.24' RT	17							
1854+29.83, 53.56' RT	TO	1854+26.57, 129.77' RT	76							
1858+07.88, 26.80' RT	TO	1858+09.95, 61.82' RT	33							
1858+10.10, 67.46' RT	TO	1858+10.51, 133.31' RT	66							
1860+90.52, 23.80' LT	TO	1860+82.24, 127.35' RT		151						
1863+44.15, 93.24' LT	TO	1863+40.17, 131.55' RT		225						
1873+25.26, 19.77' LT	TO	1873+25.14, 115.54' RT		135						
1883+27.07, 12.15' LT	TO	1883+22.84, 175.33' RT		191						
1891+58.84, 58.05' RT	TO	1891+59.15, 112.99' RT		59						
1837+70.26, 42.63' LT										
1837+67.75, 85.55' RT								1		
1837+70.26, 42.63' LT							1			
1839+16.31, 40.97' LT								1		
1840+72.40, 36.22' RT								1		
1840+72.35, 39.23' LT							1			
1842+23.39, 37.54' LT								1		
1845+30.72, 108.44' RT								1		
1845+28.23, 29.04' LT					1					
1846+25.89, 27.66' LT										
1846+26.43, 34.70' LT					1					
1854+29.99, 25.10' RT								1		
1854+30.70, 42.24' RT								1		
1854+29.83, 53.56' RT								1		
1854+26.57, 129.77' RT								1		
1858+07.88, 26.80' RT								1		
1858+09.95, 61.82' RT								1		
1858+10.10, 67.46' RT								1		
1858+10.51, 133.31' RT								1		
1860+82.24, 127.35' RT								1		
1860+90.52, 23.80' LT							1			
1863+40.17, 131.55' RT								1		
1863+44.15, 93.24' LT							1			
1873+25.14, 115.54' RT								1		
1873+25.26, 19.77' LT						1				
1883+22.84, 175.33' RT								1		
1883+27.07, 12.15' LT						1				
1891+59.15, 112.99' RT								1		
1834+27.72	TO	1891+59.19							34	23366
TOTAL			924	761	3	2	5	18	34	23366

REVIEW & INSPECTION ONLY
90% FOR

UNDERDRAIN SCHEDULE

STATION			OUTLET TO STRUCTURE	60100060 CONCRETE HEADWALLS FOR PIPE DRAINS EACH	60108106 PIPE UNDERDRAINS, TYPE 1, 6" FOOT	60108200 PIPE UNDERDRAINS 8" (SPECIAL) FOOT	Z0076870 UNDERDRAIN CONNECTION TO STRUCTURE EACH
1-270 EB - OUTLET SHOULDER							
1834+66.85	TO	1838+98.15			146		
1838+98.15	TO	1838+98.15		1		20	
1838+98.15	TO	1841+14.03			506		
1841+14.03	TO	1841+14.04		1		20	
1841+14.03	TO	1846+23.06			514		
1846+23.06	TO	1846+23.03		1		20	
1846+23.06	TO	1851+20.68			503		
1851+20.68	TO	1851+20.74		1		20	
1851+20.68	TO	1854+85.54			369		
1854+85.54	TO	1854+86.41		1		20	
1854+85.54	TO	1856+21.85			138		
1856+21.85	TO	1856+21.93		1		20	
1856+21.85	TO	1860+89.65			473		
1860+89.65	TO	1860+90.55		1		20	
1860+89.65	TO	1863+40.8			254		
1863+40.8	TO	1863+41.23		1		20	
1863+40.8	TO	1866+26.82			289		
1866+26.82	TO	1866+27.32		1		20	
1866+26.82	TO	1868+95.39			270		
1868+95.39	TO	1868.95.39		1		20	
1868+95.39	TO	1871+83.14			288		
1871+83.14	TO	1871+83.14		1		20	
1871+83.14	TO	1876+73.95			489		
1876+73.95	TO	1876+73.83		1		20	
1876+73.95	TO	1881+42.30			465		
1881+42.30	TO	1881+42.30		1		20	
1881+42.30	TO	1886+42.41			496		
1886+42.41	TO	1886+42.43		1		20	
1886+42.41	TO	1889+62.08			317		
1889+62.08	TO	1889+62.43		1		20	
1889+62.08	TO	1891+58.86			195		
1-270 EB - MEDIAN SHOULDER							
1834+69.33	TO	1836+15.53	206		146		1
1836+15.53	TO	1841+15.34	204		500		1
1841+15.34	TO	1845+28.43	202		413		1
1845+28.43	TO	1846+23.03	310		95		1
1846+23.03	TO	1851+18.98	308		496		1
1851+18.98	TO	1854+80.62	306		362		1
1854+80.62	TO	1856+21.37	305		131		1
1856+21.37	TO	1860+89.74	304		468		1
1860+89.74	TO	1863+40.81	302		251		1
1863+40.81	TO	1866+24.85	402				1
1866+24.85	TO	1868.94.79	404		284		1
1866+24.85	TO	1868.94.79	407		270		1
1868.94.79	TO	1871+37.60	409		243		1
1871+47.10	TO	1873+25.25	410		178		1
1873+25.25	TO	1876+74.03	502		349		1
1876+74.03	TO	1881+42.20	504		468		1
1881+42.20	TO	1883+26.83	506		185		1
1883+26.83	TO	1886+40.95	602		314		1
1886+40.95	TO	1889+59.77	604		319		1
1889+59.77	TO	1891+59.19	606		199		1

UNDERDRAIN SCHEDULE (CONT.)

STATION			OUTLET TO STRUCTURE	60100060 CONCRETE HEADWALLS FOR PIPE DRAINS EACH	60108106 PIPE UNDERDRAINS, TYPE 1, 6" FOOT	60108200 PIPE UNDERDRAINS 8" (SPECIAL) FOOT	Z0076870 UNDERDRAIN CONNECTION TO STRUCTURE EACH
1-270 WB - OUTLET SHOULDER							
2834+98.41	TO	2836+23.99			126		
2836+23.99	TO	2836+23.72		1		20	
2836+23.99	TO	2841+24.48			496		
2841+24.48	TO	2841+24.46		1		20	
2841+24.48	TO	2845+33.29			404		
2845+33.29	TO	2845+33.94		1		20	
2845+33.29	TO	2846+27.43			93		
2846+27.43	TO	2846+27.44		1		20	
2846+27.43	TO	2851+19.20			487		
2851+19.20	TO	2851+19.02		1		20	
2851+19.20	TO	2854+84.21			361		
2854+84.21	TO	2854+83.38		1		20	
2854+84.21	TO	2856+17.67			132		
2856+17.67	TO	2856+17.63		1		20	
2856+17.67	TO	2860+83.10			461		
2860+83.10	TO	2860+83.10		1		20	
2860+83.10	TO	2863+33.31			248		
2863+33.31	TO	2863+33.30		1		20	
2863+33.31	TO	2866+15.87			280		
2866+15.87	TO	2866+15.63		1		20	
2866+15.87	TO	2868+82.31			265		
2868+82.31	TO	2868+82.31		1		20	
2868+82.31	TO	2871+69.72			287		
2871+69.72	TO	2871+69.72		1		20	
2871+69.72	TO	2873+13.14			143		
2873+13.14	TO	2873+13.14		1		20	
2873+13.14	TO	2876+63.06			352		
2876+63.06	TO	2876+63.04		1		20	
2876+63.06	TO	2881+32.61			473		
2881+32.61	TO	2881+32.61		1		20	
2881+32.61	TO	2883+18.36			187		
2883+18.36	TO	2883+18.36		1		20	
2883+18.36	TO	2886+33.72			317		
2886+33.72	TO	2886+33.72		1		20	
2886+33.72	TO	2889+54.63			323		
2889+54.63	TO	2889+54.63		1		20	
2889+54.63	TO	2891+51.96			199		
2891+51.96	TO	2891+51.96		1		20	
1-270 WB - MEDIAN SHOULDER							
2834+74.10	TO	2836+28.82	206		146		1
2836+28.82	TO	2841+24.02	204		500		1
2841+24.02	TO	2845+33.67	202		413		1
2845+33.67	TO	2846+27.30	310		95		1
2846+27.30	TO	2851+19.37	308		496		1
2851+19.37	TO	2854+78.63	306		362		1
2854+78.63	TO	2856+18.07	305		131		1
2856+18.07	TO	2860+83.00	304		468		1
2860+83.00	TO	2863+41.28	302		251		1
2863+41.28	TO	2866+14.12	402				1
2866+14.12	TO	2868+82.48	404		284		1
2868+82.48	TO	2871+25.29	407		270		1
2871+25.29	TO	2873+12.98	409		243		1
2871+25.29	TO	2873+12.98	410		178		1
2873+12.98	TO	2876+62.90	502		349		1
2876+62.90	TO	2881+33.48	504		468		1
2881+33.48	TO	2883+18.84	506		185		1
2883+18.84	TO	2886+33.96	602		314		1
2886+33.96	TO	2889+54.09	604		319		1
2889+54.09	TO	2891+54.38	606		199		1
TOTAL			15606	34	22686	680	40

REVIEW & INSPECTION ONLY FOR 90% PLAN

REVIEW 90% FOR INSPECTION ONLY

EXISTING SIGNS

LOCATION	STATION	SIDE	DESCRIPTON	WIDTH	HEIGHT	SIGN PANEL		
						TYPE 1	TYPE 2	TYPE 3
				IN	IN	SQ FT	SQ FT	SQ FT
EB FAI 270	1789+92.00	RT	MM 35.2	18	60	7.50		
EB FAI 270	1801+79.00	RT	MM 35.4	18	60	7.50		
EB FAI 270	1809+55.00	LT	IL STATE LINE	54	36		13.50	
EB FAI 270	1837+74.00	RT	SERVICES	240	216			360.00
EB FAI 270	1839+68.00	RT	MM 0.6	18	60	7.50		
EB FAI 270	1841+24.00	RT	REPORT DRUNK DRIVING	120	60			50.00
EB FAI 270	1843+64.00	RT	CIGARETTE BOOTLEGGING	36	36	9.00		
EB FAI 270	1845+25.00	RT	R2-1	48	60		20.00	
EB FAI 270	1845+25.00	RT	R2-I102	48	36		12.00	
EB FAI 270	1847+55.00	RT	WELCOME TO ILLINOIS	168	84			98.00
EB FAI 270	1849+92.00	RT	.08 ALCOHOL	48	60		20.00	
EB FAI 270	1851+40.00	RT	MM 0.8	18	60	7.50		
EB FAI 270	1854+60.00	RT	SERVICES	174	150			181.25
EB FAI 270	1860+00.00	RT	CASINO	120	60			50.00
EB FAI 270	1861+56.00	RT	MM 1.0	18	60	7.50		
EB FAI 270	1869+22.00	LT	R3-4	36	36	9.00		
EB FAI 270	1869+22.00	LT	R3-I101	36	24	6.00		
EB FAI 270	1871+82.00	RT	MM 1.2	18	60	7.50		
EB FAI 270	1872+37.00	RT	POST-INTERCHANGE DISTANCE	216	84			126.00
EB FAI 270	1877+40.00	RT	CLICK IT OR TICKET	120	96			80.00
EB FAI 270	1881+36.00	RT	MM 1.4	18	60	7.50		
EB FAI 270	1892+29.00	RT	NOTICE / MOVE OVER/ SLOW DOWN	198	96			132.00
EB FAI 270	1883+78.00	RT	GUIDE SIGN	198	132			181.50
EB FAI 270	1893+17.00	RT	MM 1.6	18	60	7.50		
WB FAI 270	2788+01.00	LT	MM 35.2	18	60	7.50		
WB FAI 270	2799+43.00	LT	MM 35.4	18	60	7.50		
WB FAI 270	2809+90.00	LT	MM 0.0	18	60	7.50		
WB FAI 270	2809+90.00	RT	MO STATE LINE	54	36		13.50	
WB FAI 270	2817+78.00	LT	MM 0.2	18	60	7.50		
WB FAI 270	2839+20.00	LT	MM 0.6	18	60	7.50		
WB FAI 270	2849+81.00	LT	MISSISSIPPI RIVER	96	42			28.00
WB FAI 270	2852+06.00	LT	MM 0.8	18	60	7.50		
WB FAI 270	2856+73.00	LT	SERVICES	192	144			192.00
WB FAI 270	2861+07.00	LT	MM 1.0	18	60	7.50		
WB FAI 270	2863+71.00	LT	ADVANCE GUIDE SIGN	216	108			162.00
WB FAI 270	2869+10.00	RT	R3-4	36	36	9.00		
WB FAI 270	2869+10.00	RT	R3-I101	36	24	6.00		
WB FAI 270	2870+93.00	LT	MM 1.2	18	60	7.50		
WB FAI 270	2890+61.00	RT	CAR VAN POOL	36	36	9.00		
WB FAI 270	2891+95.00	LT	MM 1.4	18	60	7.50		
WB FAI 270	2892+69.00	LT	MM 1.6	18	60	7.50		
WB FAI 270	2903+48.00	LT	R2-4A	48	96			32.00

PAVEMENT MARKING

LOCATION	BEGINNING STATION	ENDING STATION	DESCRIPTION	PREFORMED PLASTIC PAVEMENT MARKING, TYPE B - LINE 4"	RAISED REFLECTIVE PAVEMENT MARKER	GROOVING FOR RECESSED PAVEMENT MARKING 5"	CONTRAST PAVEMENT MARKINGS
				FOOT	EACH	FOOT	FOOT
EB FAI 270	1779+86.24	1788+68.37	SKIP - DASH WHITE	221		221	221
EB FAI 270	1779+86.24	1905+17.57	SOLID YELLOW	12531		12531	12531
EB FAI 270	1779+86.24	1905+17.57	SKIP - DASH WHITE	3133	313	3133	3133
EB FAI 270	1779+86.24	1905+17.57	SKIP - DASH WHITE	3133	313	3133	3133
EB FAI 270	1779+86.24	1905+17.57	SOLID WHITE	12531		12531	12531
WB FAI 270	2780+07.76	2789+64.00	SKIP - DASH WHITE	239		239	239
WB FAI 270	2780+07.76	2905+15.37	SOLID YELLOW	12508		12508	12508
WB FAI 270	2780+07.76	2905+15.37	SKIP - DASH WHITE	3127	313	3127	3127
WB FAI 270	2780+07.76	2905+15.37	SKIP - DASH WHITE	3127	313	3127	3127
WB FAI 270	2780+07.76	2905+15.37	SOLID WHITE	12508		12508	12508
			TOTAL	63058	1252	63058	63058

DELINEATORS & REFLECTORS

LOCATION	BEGINNING STATION	ENDING STATION	DESCRIPTION	DELINEATORS	BARRIER WALL REFLECTORS	
					TYPE B	TYPE C
				EACH	EACH	EACH
EB FAI 270	1779+72.00	1828+86.91	LT		13	13
EB FAI 270	1779+72.00	1828+86.91	RT		13	13
EB FAI 270	2828+86.91	1833+94.70	RT		3	3
EB FAI 270	2828+86.91	1836+86.91	LT		3	3
EB FAI 270	1833+93.70	1836+86.91		1		
EB FAI 270	1836+86.91	1867+80.07		18	18	18
EB FAI 270	1867+80.07	1874+51.65		2	3	3
EB FAI 270	1874+51.65	1898+66.31		6	8	8
EB FAI 270	1898+66.31	1905+17.00		2		
WB FAI 270	2779+72.00	2828+86.91	LT		13	13
WB FAI 270	2779+72.00	2828+86.91	RT		13	13
WB FAI 270	2828+86.91	2834+35.00	LT		2	2
WB FAI 270	2828+86.91	2836+86.91	RT		2	2
WB FAI 270	2834+34.67	2836+86.91		1		
WB FAI 270	2836+86.91	2867+80.07		18	18	18
WB FAI 270	2867+80.07	2874+51.65		2	3	3
WB FAI 270	2874+51.65	2898+66.31		6	8	258
WB FAI 270	2898+66.31	2905+17.57		2		
			TOTAL	58	120	370

SIGNING

LOCATION	STATION	SIDE	DESCRIPTON	WIDTH	HEIGHT	SIGN PANEL		REMOVE SIGN PANEL			RELOCATE SIGN PANEL			MILE POST MARKER ASSEMBLY	STRUCTURAL STEEL SIGN SUPPORT - BREAKAWAY	WOOD SIGN SUPPORT	CONCRETE FOUNDATIONS	REMOVE CONCRETE FOUNDATION - GROUND MOUNT
						TYPE 2	TYPE 3	TYPE 1	TYPE 2	TYPE 3	TYPE 1	TYPE 2	TYPE 3					
				IN	IN	SQ FT	SQ FT	SQ FT	SQ FT	SQ FT	SQ FT	SQ FT	SQ FT	EACH	POUND	FOOT	CU YD	EACH
EB FAI 270	SPAN 15	LT	DAM BLOCKS RIVER	1056	72		528.00											
EB FAI 270	1789+22.00		MM 35.2											1				
EB FAI 270	1789+92.00	RT	MM 35.2	18	60			7.50										
EB FAI 270	1801+79.00	RT	MM 35.4	18	60			7.50										
EB FAI 270	1802+17.00		MM 35.4											1				
EB FAI 270	1809+55.00	LT	IL STATE LINE	54	36				13.50									
EB FAI 270	1809+58.00		MM 0.0											1				
EB FAI 270	1809+75.00	RT	IL STATE LINE	54	36	13.50												
EB FAI 270	1817+03.00		MM 0.2											1				
EB FAI 270	1828+96.00		MM 0.4											1				
EB FAI 270	1837+74.00	RT	SERVICES	240	216					360.00								2
EB FAI 270	1837+78.00	RT	SERVICES	240	216		360.00								2565		4.46	
EB FAI 270	1839+62.00		MM 0.6											1				
EB FAI 270	1839+68.00	RT	MM 0.6	18	60			7.50										
EB FAI 270	1841+24.00	RT	REPORT DRUNK DRIVING	120	60								50.00		256.5		1.40	2
EB FAI 270	1843+64.00	RT	CIGARETTE BOOTLEGGING	36	36						9.00							
EB FAI 270	1845+25.00	RT	R2-1	48	60				20.00									
EB FAI 270	1845+25.00	RT	R2-I102	48	36				12.00									
EB FAI 270	1845+60.00	RT	R2-1	48	60	20.00												
EB FAI 270	1845+60.00	RT	R2-I102	48	36	12.00												
EB FAI 270	1847+55.00	RT	WELCOME TO ILLINOIS	168	84								98.00		495.0		1.40	2
EB FAI 270	1849+92.00	RT	.08 ALCOHOL	48	60							20.00				17		1
EB FAI 270	1851+40.00	RT	MM 0.8	18	60			7.50										
EB FAI 270	1851+62.00		MM 0.8											1				
EB FAI 270	1854+45.00	RT	SERVICES	174	150		181.25								1170		2.54	
EB FAI 270	1854+60.00	RT	SERVICES	174	150					181.25								2
EB FAI 270	1859+72.00	RT	CASINO	120	60		50.00								256.5		1.40	
EB FAI 270	1860+00.00	RT	CASINO	120	60					50.00								2
EB FAI 270	1861+62.00		MM 1.0											1				
EB FAI 270	1861+56.00	RT	MM 1.0	18	60			7.50										
EB FAI 270	1869+22.00	LT	R3-4	36	36			9.00										
EB FAI 270	1869+22.00	LT	R3-I101	36	24			6.00										
EB FAI 270	1871+62.00		MM 1.2											1				
EB FAI 270	1871+82.00	RT	MM 1.2	18	60			7.50										
EB FAI 270	1872+28.00	RT	POST-INTERCHANGE DISTANCE	216	84		126.00								495.0		1.40	
EB FAI 270	1872+37.00	RT	POST-INTERCHANGE DISTANCE	216	84					126.00								2
EB FAI 270	1877+40.00	RT	CLICK IT OR TICKET	120	96								80.00		525.0		1.40	2
EB FAI 270	1881+36.00	RT	MM 1.4	18	60			7.50										
EB FAI 270	1881+62.00		MM 1.4											1				
EB FAI 270	1883+78.00	RT	GUIDE SIGN	198	132					181.50								3
EB FAI 270	1884+11.00	RT	GUIDE SIGN	198	132		181.50								1386.0		3.54	
EB FAI 270	1892+29.00	RT	NOTICE / MOVE OVER/ SLOW DOWN	198	96								132.00		630.0		1.40	2
EB FAI 270	1893+17.00	RT	MM 1.6	18	60			7.50						1				
WB FAI 270	SPAN 15	LT	DAM BLOCKS RIVER	1056	72		528.00											
WB FAI 270	2788+01.00	LT	MM 35.2	18	60			7.50										
WB FAI 270	2789+31.00		MM 35.2											1				
WB FAI 270	2799+43.00	LT	MM 35.4	18	60			7.50										
WB FAI 270	2802+19.00		MM 35.4											1				
WB FAI 270	2806+53.29	LT	H - RIVERVIEW DRIVE - 1/2 MILE	234	96		173.50											
			EXIT	84	30													
WB FAI 270	2809+60.00	LT	MO STATE LINE	54	36	13.50												
WB FAI 270	2809+60.00		MM 0.0											1				
WB FAI 270	2809+90.00	LT	MM 0.0	18	60			7.50										
WB FAI 270	2809+90.00	RT	MO STATE LINE	54	36				13.50									
WB FAI 270	2816+98.00		MM 0.2											1				
WB FAI 270	2817+78.00	LT	MM 0.2	18	60			7.50										
WB FAI 270	2828+94.00		MM 0.4											1				
WB FAI 270	2839+20.00	LT	MM 0.6	18	60			7.50										
WB FAI 270	2839+68.00		MM 0.6											1				
WB FAI 270	2849+54.00	LT	MISSISSIPPI RIVER	96	42		28.00								229.5		1.40	
WB FAI 270	2849+81.00	LT	MISSISSIPPI RIVER	96	42					28.00								2
WB FAI 270	2852+06.00	LT	MM 0.8	18	60			7.50										
WB FAI 270	2853+69.00		MM 0.8											1				
WB FAI 270	2856+33.00	LT	SERVICES	192	144		192.00								1144.0		2.54	
WB FAI 270	2856+73.00	LT	SERVICES	192	144					192.00								2
WB FAI 270	2861+07.00	LT	MM 1.0	18	60			7.50										
WB FAI 270	2861+69.00		MM 1.0											1				
WB FAI 270	2863+45.00	LT	ADVANCE GUIDE SIGN	216	108		162.00								666.0		1.40	
WB FAI 270	2863+71.00	LT	ADVANCE GUIDE SIGN	216	108					162.00								2
WB FAI 270	2869+10.00	RT	R3-4	36	36			9.00										
WB FAI 270	2869+10.00	RT	R3-I101	36	24			6.00										
WB FAI 270	2870+93.00	LT	MM 1.2	18	60			7.50										
WB FAI 270	2871+69.00		MM 1.2											1				
WB FAI 270	2881+69.00		MM 1.4											1				
WB FAI 270	2890+61.00	RT	CAR VAN POOL	36	36						9.00					15		
WB FAI 270	2891+95.00	LT	MM 1.4	18	60			7.50										
WB FAI 270	2892+69.00	LT	MM 1.6	18	60			7.50										
WB FAI 270	2893+05.00		MM 1.6											1				
WB FAI 270	2903+27.00	LT	R2-4A	48	96		32.00									20		
WB FAI 270	2903+48.00	LT	R2-4A	48	96					32.00								
				TOTAL		59.00	2542.25	165.00	59.00	1312.75	18.00	20.00	360.00	22	9818.50	52	24.28	26

PAVEMENT MARKINGS ARE DESIGNED FOR THE ULTIMATE SIX-LANE CONFIGURATION
IN ANTICIPATION OF PROJECT APPROVAL OF CURRENT SIX-LANE STUDY FOR I-270 PRIOR TO PS&E

Pavement Removal

LOCATION					PAVEMENT REMOVAL 44000100	PAVED SHOULDER REMOVAL 44004250	APPROACH SLAB REMOVAL Z0004552
	STATION			SIDE	SQ YD	SQ YD	SQ YD
FAI - 270 EB	1834+23	TO	1871+43	RT	9,982		
	1833+82	TO	1905+18	RT		9,445	
	1833+82	TO	1891+97	LT		4,957	
	1833+82	TO	1834+24	RT			112
FAI - 270 WB	2833+95	TO	2871+ 31	LT	9,938		
	2884+72	TO	2891+97	LT	1,881		
	2833+95	TO	1891+97	RT		5,047	
	2833+95	TO	2872+32	LT		4,229	
	2884+72	TO	2905+16	LT		3,138	
	1833+82	TO	1834+24	RT			112
				TOTAL	**21,801**	**26,816**	**224**

BARRIER AND GUARDRAIL REMOVAL

LOCATION					CONCRETE BARRIER REMOVAL 44001980	GUARDRAIL REMOVAL 63200310
	STATION			SIDE	FOOT	FOOT
FAI - 270 EB	1845+24	TO	1869+20	RT		2,396
	1833+82	TO	1845+24	N/A	1,142	
	1869+73	TO	1890+63	RT		2,090
	1890+63	TO	1905+10	N/A	1,447	
	1833+82	TO	1905+18	RT		7,136
FAI - 270 WB	2845+71	TO	2869+05	LT		2,334
	2869+65	TO	2890+35	LT		2,070
	2833+95	TO	2905+16	LT		7,121
				TOTAL	**2,589**	**23,147**

TREE REMOVAL

LOCATION					TREE REMOVAL 20100500
	STATION			SIDE	ACRE
FAI - 270 EB	1833+51	TO	1854+65	RT	1.88
	1856+03	TO	1857+56	RT	0.11
	1858+91	TO	1859+63	RT	0.03
	1860+57	TO	1862+38	RT	0.09
	1865+76	TO	1866+10	RT	0.02
FAI - 270 WB	2833+95	TO	2844+06	LT	0.57
				TOTAL	**2.7**

SEEDING AND MULCH

LOCATION					MULCH, METHOD 3A 25100127	SEEDING CLASS 3A 25000305
	STATION			SIDE	ACRE	ACRE
FAI - 270 EB STAGE 1B	1833+38	TO	1842+14	RT	0.73	0.72
	1843+63	TO	1905+14	RT	16.51	16.55
FAI - 270 WB STAGE 2A	2833+70	TO	2835+01	LT	0.04	0.04
	2835+01	TO	2871+27	LT	2.35	2.35
	2875+89	TO	2905+50	LT	5.00	5.00
FAI - 270 EB FINAL LANDSCAPING	1833+38	TO	1842+14	RT	0.72	
	1843+63	TO	1905+14	RT	16.55	
FAI - 270 WB FINAL LANDSCAPING	2833+70	TO	2835+01	LT	0.04	
	2835+01	TO	2871+27	LT	2.35	
	2875+89	TO	2905+50	LT	5.00	
				TOTAL	**50.00**	**25.00**

TEMPORARY EROSION CONTROL SEEDING

LOCATION					TEMPORARY EROSION CONTROL SEEDING 28000250
	STATION			SIDE	POUND
FAI - 270 EB STAGE 1B	1833+38	TO	1842+14	RT	80
	1843+63	TO	1905+14	RT	1,816
	1832+27	TO	1833+52	RT	21
	1833+38	TO	1852+06	RT	372
FAI - 270 WB STAGE 2A	2833+81	TO	2835+01	LT	4
	2835+01	TO	2871+27	LT	259
	2875+89	TO	2905+50	LT	550
	2832+75	TO	2833+53	LT	15
	2833+77	TO	2835+01	LT	41
	2885+07	TO	2896+88	LT	91
				SUBTOTAL	**3,249**
assume 25% of 1st application is reseeded every month over 7 months					**5,686**
				TOTAL	**8,935**

90% FOR REVIEW & INSPECTION ONLY

STONE RIP RAP AND FILTER FABRIX

LOCATION					STONE RIPRAP, CLASS A4 28100107	STONE RIPRAP, CLASS A6 28100111	FILTER FABRIC 28200200
	STATION			SIDE	SQ YD	SQ YD	SQ YD
FAI - 270 EB	1839+24	TO	1852+06	RT	10,038		10,038
	1832+28	TO	1833+26	N/A		1,494	1,494
	1833+52	TO	1839+24	N/A		8,109	8,109
				TOTAL	**10,039**	**9,603**	**19,641**

INLET FILTERS

LOCATION					INLET FILTERS 28000510
	STATION			SIDE	EACH
FAI - 270 EB	1836+00	TO	1836+00	RT	3
	1836+00	TO	1846+00	RT	3
	1846+00	TO	1846+00	RT & LT	4
	1846+00	TO	1856+00	RT	6
	1851+19	TO	1851+19	LT	6
	1856+00	TO	1866+00	RT	10
	1860+00	TO	1864+00	RT	2
	1862+16	TO	1862+16	LT	16
	1866+00	TO	1876+00	RT	8
	1873+00	TO	1892+00	RT	4
	1876+ 00	TO	1886+00	RT	6
	1884+91	TO	1884+91	RT & LT	16
	1886+00	TO	1896+00	RT	12
	1896+00	TO	1905+00	RT	2
FAI - 270 WB	2846+31	TO	--	LT	1
	2860+84	TO	--	RT	1
	2863+32	TO	--	RT	1
	2873+13	TO	--	RT	1
	2883+83	TO	--	RT	1
	2891+55	TO	--	RT & LT	2
				TOTAL	**99.0**

DITCH CHECKS AND ERROSIN BARRIER REMOVAL

LOCATION					TEMPORARY DITCH CHECKS REMOVAL 28000305	PERIMETER EROSION BARRIER REMOVAL 28000400
	STATION			SIDE	FOOT	FOOT
FAI - 270 EB	1832+27	TO	1833+52	RT		278
	1833+38	TO	1905+14	RT		8,568
	1836+00	TO	1837+00	RT	80	
	1839+00	TO	1842+00	RT	80	
	1843+00	TO	--	RT		438
	1844+00	TO	1844+00	RT	58	
	1847+50	TO	1847+50	RT	45	
	1853+00	TO	1858+00	RT	51	
	1853+00	TO	--	RT		632
	1856+00	TO	--	RT		709
	1859+00	TO	1859+50	RT	24	
	1862+00	TO	--	RT		301
	1881+00	TO	--	RT		371
FAI - 270 WB	2832+75	TO	2833+53	LT		243
	2833+68	TO	2905+15	LT		7,557
	2835+00	TO	--	LT		614
	2844+00	TO	--	LT		568
	2862+00	TO	--	LT		956
	2884+00	TO	2889+50	LT	132	
	2885+00	TO		LT		670
	2890+00	TO	2895+25	LT	140	
	2899+00	TO	2900+50	LT	80	
				TOTAL	**690**	**21,905**

HEAVY DUTY EROSION CONTROL BLANKET

LOCATION					HEAVY DUTY EROSION CONTROL BLANKET
	STATION			SIDE	SQ YD
FAI - 270 EB STAGE 1B	1832+27	TO	1833+52	RT	920
	1833+34	TO	1852+06	RT	16,353
FAI - 270 WB STAGE 2A	2832+75	TO	2833+53	LT	672
	2833+77	TO	2835+01	LT	1,788
	2885+07	TO	2896+88	LT	3,994
				TOTAL	**23,727**

90% FOR REVIEW & INSPECTION ONLY

BENCHMARKS

BM 270-000 SET CUT "□" ON SOUTH CORNER OF CONCRETE PAD FOR A PICNIC TABLE WITH CANOPY AT NORTHWEST PART OF PARKING AREA FOR EAST END OF OLD CHAIN OF ROCKS BRIDGE OVER THE MISSISSIPPI RIVER, +/- 50' NORTHEAST OF EAST END OF BRIDGE
ELEV = 433.789'

BM 270-107 RR SPIKE IN POWER POLE AT WEST SIDE OF AGGREGATE PRIVATE ROAD TO LOU CIONKO PROPERTY FROM WEST END OF OLD CHAIN OF ROCKS CANAL BRIDGE, GO WEST ALONG OLD CHAIN OF ROCKS ROAD FOR 1.1 MILE TO AN AGGREGATE PRIVATE DRIVE TO THE NORTH, THEN GO 0.25 MILES NORTH TO THE LAST POWER POLE ON WEST SIDE OF DRIVE.
ELEV = 416.411'

HR-2 DISC IN CONCRETE AT SOUTHEAST CORNER OF OLD CHAIN OF ROCKS ROAD & ACCESS ROAD TO THE CHAIN OF ROCKS LOW WATER DAM.
ELEV = 432.179'

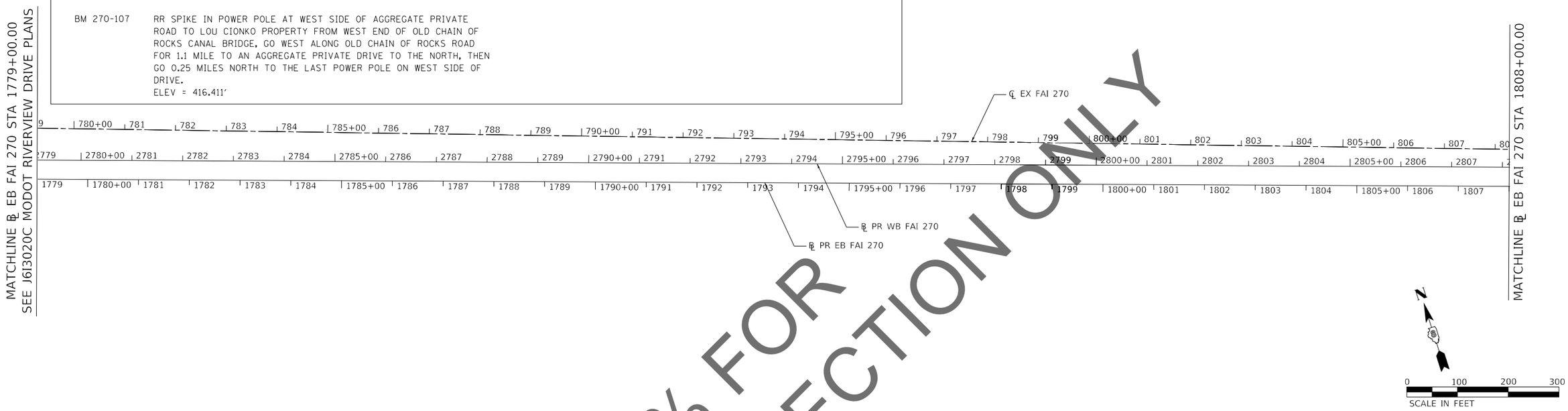

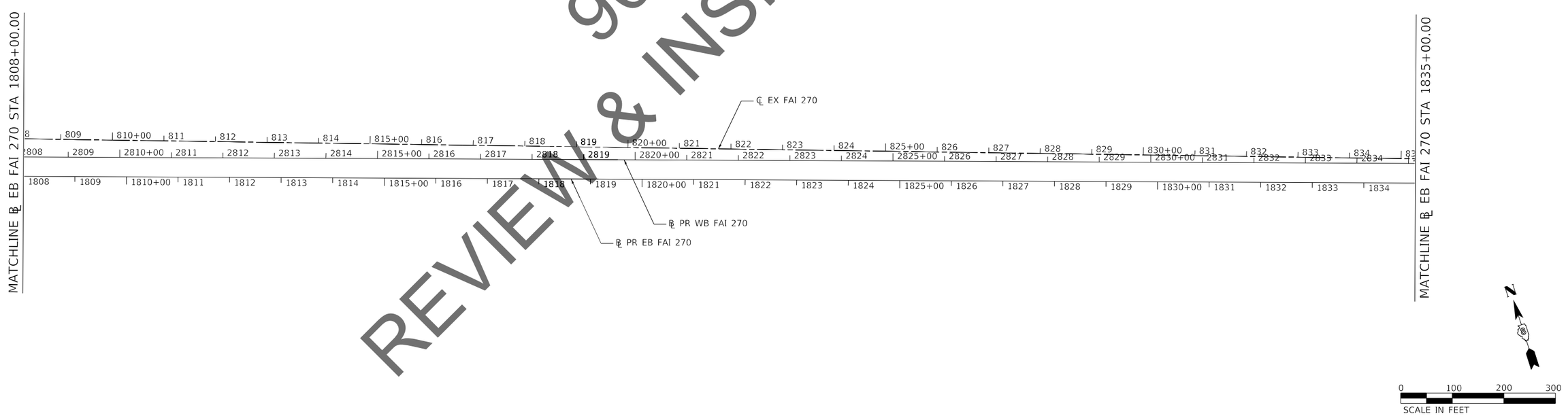

90% FOR REVIEW & INSPECTION ONLY

MODEL: Default
FILE NAME: C:\ICS4PDF\994845086_119\D876\90-alt-alignment-001.dgn

HORNER & SHIFRIN	USER NAME = PWICS$	DESIGNED -	REVISED -	STATE OF ILLINOIS DEPARTMENT OF TRANSPORTATION	FAI–270 ALIGNMENTS, TIES, AND BENCHMARKS	F.A.I. RTE.	SECTION	COUNTY	TOTAL SHEETS / SHEET NO.
		DRAWN -	REVISED -			270	60(B)-1	MADISON	860 / 31
Teaming with: PARSONS	PLOT SCALE = 100.0000 ' / in.	CHECKED -	REVISED -					CONTRACT NO. 76J90	
	PLOT DATE = 11/16/2021	DATE -	REVISED -		SCALE: 1" = 100' SHEET 1 OF 4 SHEETS STA. TO STA.		ILLINOIS	FED. AID PROJECT	

BENCHMARKS

BM 270-109 — CUT "X" ON SW BOLT OF SOUTH LEG FOR SIGN READING "WELCOME CENTER/REST AREA, 1 MILE" @ NORTH SIDE OF I-270, +/- 0.21 MILE EAST OF EAST END OF I-270 BRIDGE OVER MISSISSIPPI RIVER.
ELEV = 440.117'

BM 270-108 — CUT "X" ON SE BOLT OF SOUTH LEG FOR SIGN READING "GAS EXIT 34/FOOD-EXIT 34" @ NORTH SIDE OF I-270, +/- 250' WEST OF MM 1.0
ELEV = 440.920'

BM 270-103 — FOUND RR SPIKE IN POWER POLE @ EAST SIDE OF WATERWORKS ROAD, +/- 0.75 MILES NORTHWEST OF NEW I-270 BRIDGE OVER WATERWORKS ROAD, +/- 40' SOUTH OF FIELD ENTRANCE TO THE EAST.
ELEV = 417.003'

BM 270-107 — CUT " □ " ON NORTH SIDE OF LIGHT POLE FOUNDATION (POLE #7) AT NORTH SIDE OF I-270, +/- 100' EAST OF MM 1.2
ELEV = 441.277

BM 270-102 — FOUND RR SPIKE IN POWER POLE AT NORTH SIDE OF WATERWORKS ROAD, +/- 0.17 MILES NORTH OF OLD CHAIN OF ROCKS ROAD, AND BEND IN ROAD
ELEV = 418.256'

BM 270-101 — FOUND RR SPIKE IN POWER POLE WITH DEADMAN ANCHOR AT SE CORNER OF OLD CHAIN OF ROCKS ROAD & WATERWORKS ROAD.
ELEV = 431.887'

BM 270-106 — CUT " □ " ON NORTH SIDE OF LIGHT POLE FOUNDATION (POE #21) AT NORTH SIDE OF I-270, +/- 0.35' MILES WEST OF WEST END OF I-270 BRIDGE OVER CHAIN OF ROCKS CANAL.
ELEV = 446.265'

BM 270-18 — FOUND CUT " □ " ON SOUTH SIDE OF TRAFFIC SIGNAL FOUNDATION AT NORTH SIDE OF OLD CHAIN OF ROCKS ROAD, +/- 200' WEST OF WEST END OF OLD CHAIN OF ROCKS CANAL BRIDGE.
ELEV = 442.687

N

0 100 200 300
SCALE IN FEET

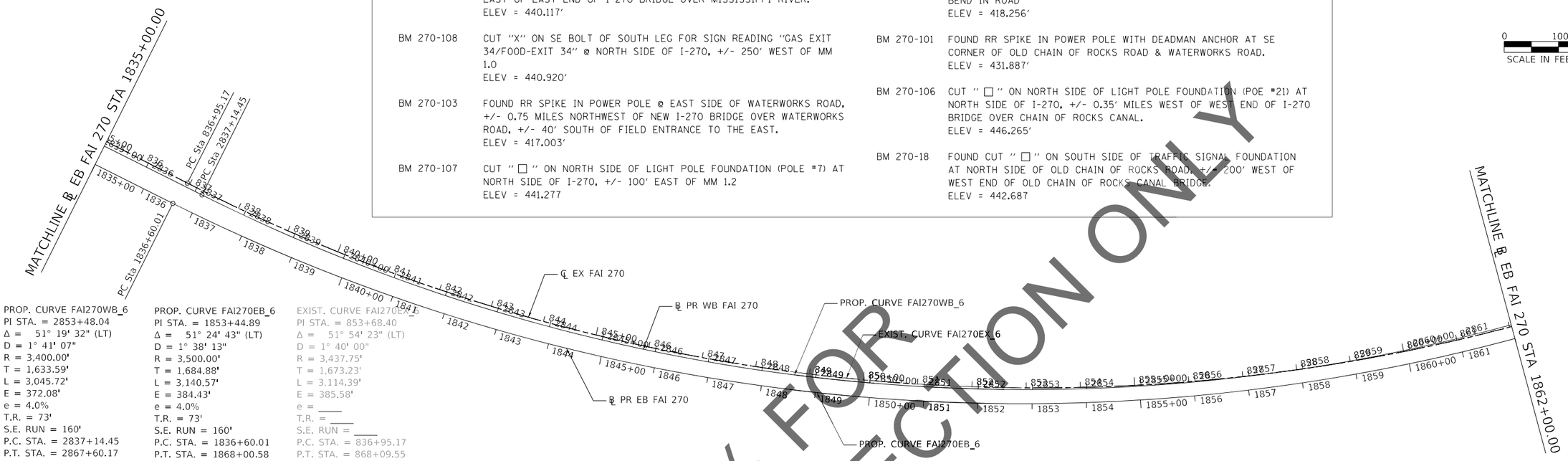

PROP. CURVE FAI270WB_6
PI STA. = 2853+48.04
Δ = 51° 19' 32" (LT)
D = 1° 41' 07"
R = 3,400.00'
T = 1,633.59'
L = 3,045.72'
E = 372.08'
e = 4.0%
T.R. = 73'
S.E. RUN = 160'
P.C. STA. = 2837+14.45
P.T. STA. = 2867+60.17

PROP. CURVE FAI270EB_6
PI STA. = 1853+44.89
Δ = 51° 24' 43" (LT)
D = 1° 38' 13"
R = 3,500.00'
T = 1,684.88'
L = 3,140.57'
E = 384.43'
e = 4.0%
T.R. = 73'
S.E. RUN = 160'
P.C. STA. = 1836+60.01
P.T. STA. = 1868+00.58

EXIST. CURVE FAI270EX_6
PI STA. = 853+68.40
Δ = 51° 54' 23" (LT)
D = 1° 40' 00"
R = 3,437.75'
T = 1,673.23'
L = 3,114.39'
E = 385.58'
e = ____
T.R. = ____
S.E. RUN = ____
P.C. STA. = 836+95.17
P.T. STA. = 868+09.55

90% FOR REVIEW & INSPECTION ONLY

EXIST. CURVE FAI270EX_11
PI STA. = 1173+66.45
Δ = 29° 50' 08" (RT)
D = 1° 14' 44"
R = 4,600.00'
T = 1,225.49'
L = 2,395.35'
E = 160.44'
e = ____
T.R. = ____
S.E. RUN = ____
P.C. STA. = 1161+40.95
P.T. STA. = 1185+36.30

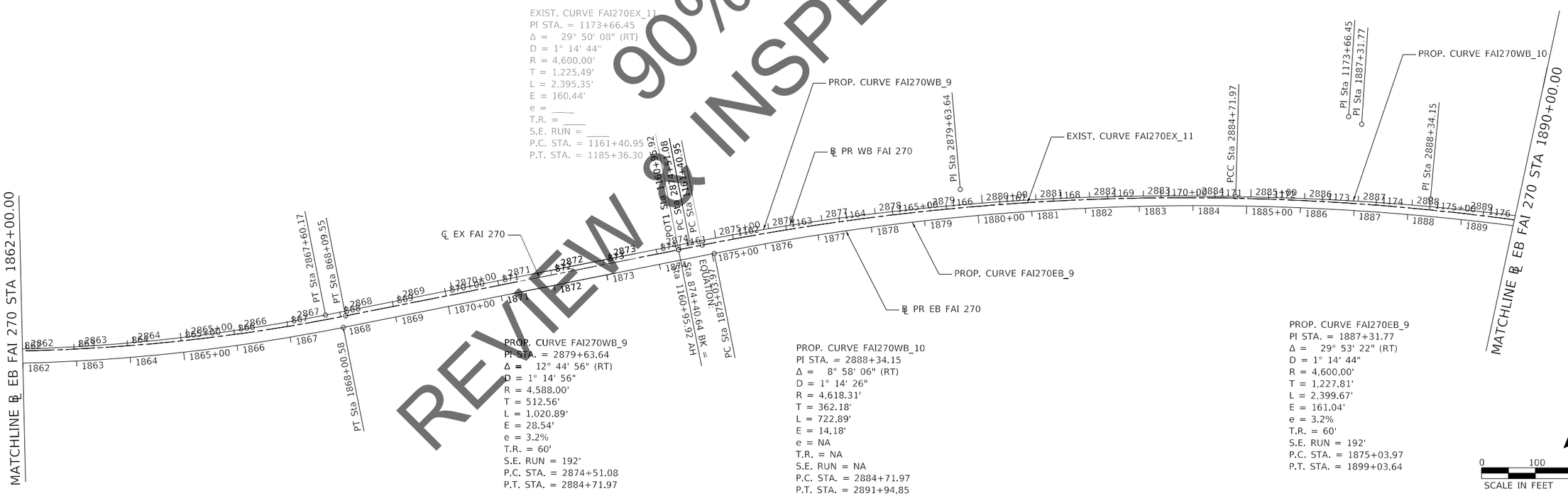

PROP. CURVE FAI270WB_9
PI STA. = 2879+63.64
Δ = 12° 44' 56" (RT)
D = 1° 14' 56"
R = 4,588.00'
T = 512.56'
L = 1,020.89'
E = 28.54'
e = 3.2%
T.R. = 60'
S.E. RUN = 192'
P.C. STA. = 2874+51.08
P.T. STA. = 2884+71.97

PROP. CURVE FAI270WB_10
PI STA. = 2888+34.15
Δ = 8° 58' 06" (RT)
D = 1° 14' 26"
R = 4,618.31'
T = 362.18'
L = 722.89'
E = 14.18'
e = NA
T.R. = NA
S.E. RUN = NA
P.C. STA. = 2884+71.97
P.T. STA. = 2891+94.85

PROP. CURVE FAI270EB_9
PI STA. = 1887+31.77
Δ = 29° 53' 22" (RT)
D = 1° 14' 44"
R = 4,600.00'
T = 1,227.81'
L = 2,399.67'
E = 161.04'
e = 3.2%
T.R. = 60'
S.E. RUN = 192'
P.C. STA. = 1875+03.97
P.T. STA. = 1899+03.64

N

0 100 200 300
SCALE IN FEET

MODEL: Default
FILE NAME: C:\CS4PDF\9948\45086_1200D876\90-alt-alignment-002.dgn

HORNER & SHIFRIN
Teaming with: PARSONS

USER NAME = PWICS$	DESIGNED -	REVISED -	
	DRAWN -	REVISED -	
PLOT SCALE = 100.0000 ' / in.	CHECKED -	REVISED -	
PLOT DATE = 11/16/2021	DATE -	REVISED -	

STATE OF ILLINOIS
DEPARTMENT OF TRANSPORTATION

FAI–270
ALIGNMENTS, TIES, AND BENCHMARKS

SCALE: 1" = 100' | SHEET 2 OF 4 SHEETS | STA. TO STA.

F.A.I. RTE.	SECTION	COUNTY	TOTAL SHEETS	SHEET NO.
270	60(B)-1	MADISON	860	32

CONTRACT NO. 76J90
ILLINOIS | FED. AID PROJECT

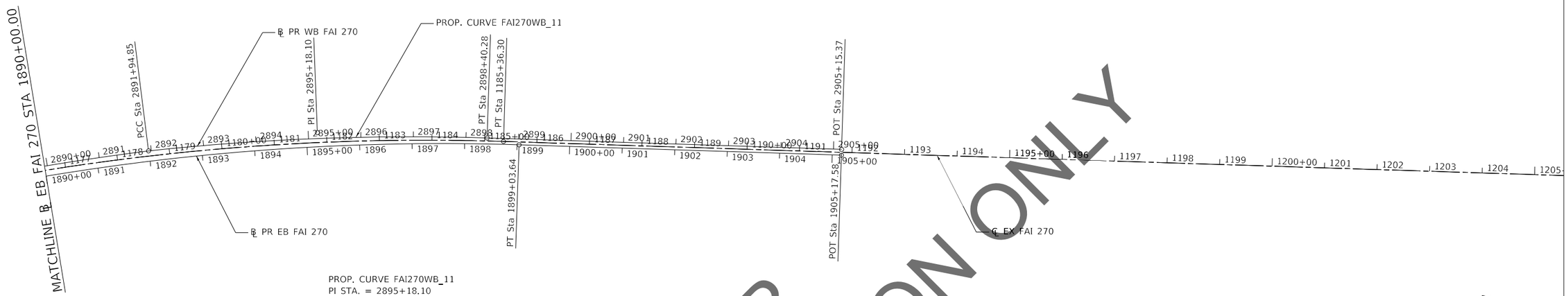

PROP. CURVE FAI270WB_11
PI STA. = 2895+18.10
Δ = 8° 02' 21" (RT)
D = 1° 14' 44"
R = 4,600.00'
T = 323.24'
L = 645.43'
E = 11.34'
e = 3.2%
T.R. = 60'
S.E. RUN = 192'
P.C. STA. = 2891+94.85
P.T. STA. = 2898+40.28

N

0 100 200 300
SCALE IN FEET

BENCHMARKS

BM 270-105 CUT "□" ON SOUTH SIDE OF LIGHT POLE FOUNDATION (POLE#37) AT NORTH SIDE OF I-270, +/- 300' WEST OF WEST END OF I-270 BRIDGE OF CHAIN OF ROCKS CANAL.
ELEV = 466.217'

BM 2316-1 SET RR SPIKE IN NORTH SIDE OF POWER POLE WITH TRANSFORMER & DEADMAN ANCHOR AT SOUTH SIDE OF WATERWORKS ROAD, +/- 0.1 MILE NW OF I-270 OVERPASS.
ELEV = 424.386'

BM 22316-2 SET CUT "□" ON EAST END OF HEADWALL FOR A 2' X 4' BOX CULVERT AT WEST SIDE OF CHOUTEAU PLACE ROAD, DIRECTLY BELOW THE NORTH SIDE OF THE OLD CHAIN OF ROCKS BRIDGE.
ELEV = 416.000'

0 100 200 300
SCALE IN FEET

90% FOR REVIEW & INSPECTION ONLY

MODEL: Default
FILE NAME: C:\CS4PDF\994845086_1210876190-alt-alignment-003.dgn

HORNER & SHIFRIN Teaming with: PARSONS	USER NAME = PWICS$	DESIGNED -	REVISED -	STATE OF ILLINOIS DEPARTMENT OF TRANSPORTATION	FAI–270 ALIGNMENTS, TIES, AND BENCHMARKS	F.A.I. RTE.	SECTION	COUNTY	TOTAL SHEETS	SHEET NO.
		DRAWN -	REVISED -			270	60(B)-1	MADISON	860	33
	PLOT SCALE = 100.0000 ' / in.	CHECKED -	REVISED -					CONTRACT NO. 76J90		
	PLOT DATE = 11/16/2021	DATE -	REVISED -		SCALE: 1" = 100' SHEET 3 OF 4 SHEETS STA. TO STA.		ILLINOIS	FED. AID PROJECT		

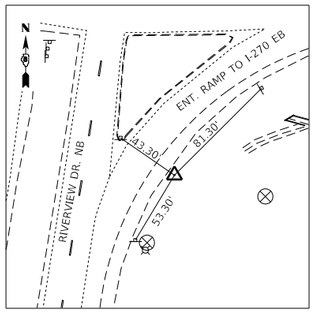

CP 218
5/8"Ø x 30" REBAR WITH IDOT CAP
764,545.2801 N
292,307.1866 E

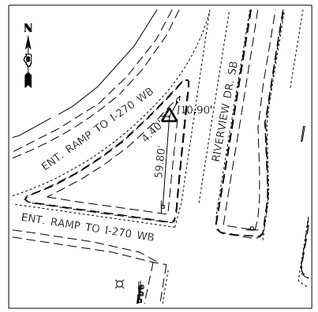

CP 219
5/8"Ø x 30" REBAR WITH IDOT CAP
765,133.8928 N
292,252.7126 E

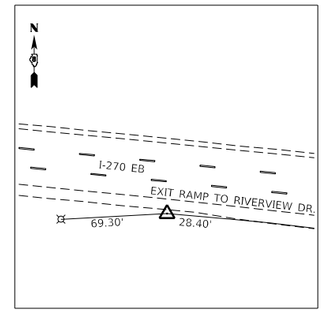

CP 222
5/8"Ø x 30" REBAR WITH IDOT CAP
764,941.4868 N
290,975.1891 E

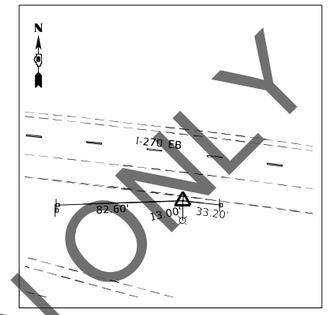

CP 223
5/8"Ø x 30" REBAR WITH IDOT CAP
764,865.3745 N
291,736.8661 E

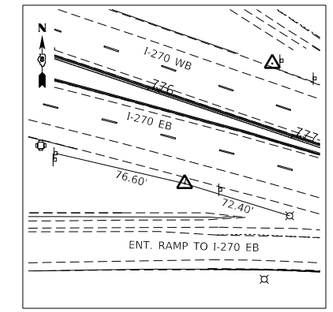

CP 224
5/8"Ø x 30" REBAR WITH IDOT CAP
764,693.1129 N
292,585.7016 E

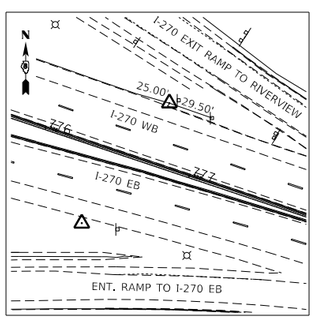

CP 225
5/8"Ø x 30" REBAR WITH IDOT CAP
764,772.3933 N
292,643.5698 E

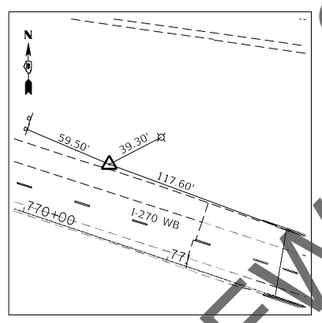

CP 226
5/8"Ø x 30" REBAR WITH IDOT CAP
764,976.7100 N
292,049.4454 E

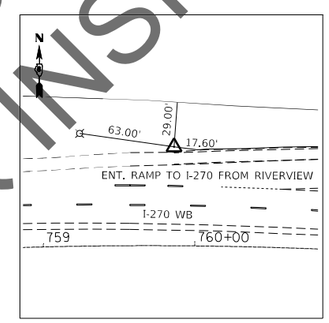

CP 227
5/8"Ø x 30" REBAR WITH IDOT CAP
765,192.3013 N
291,000.2604 E

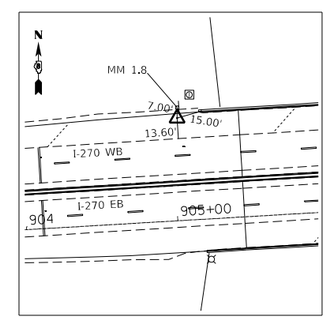

CP 228
CUT "X"
764,412.9292 N
304,760.3627 E

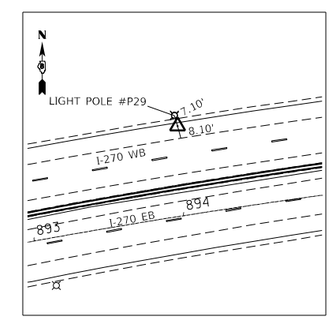

CP 229
CUT "X"
764,317.6317 N
303,660.6301 E

REVIEW & INSPECTION ONLY
90% FOR

MODEL: Default
FILE NAME: C:\CS4PDF\9948\45086_61D876\99-sht-ATb.dgn

HORNER & SHIFRIN
Teaming with: PARSONS

USER NAME = PWICS$	DESIGNED -	REVISED -	
	DRAWN -	REVISED -	
PLOT SCALE = 500.0000 ' / in.	CHECKED -	REVISED -	
PLOT DATE = 11/16/2021	DATE -	REVISED -	

STATE OF ILLINOIS
DEPARTMENT OF TRANSPORTATION

FAI–270
ALIGNMENT, TIES AND BENCHMARKS

SCALE: | SHEET 4 OF 4 SHEETS | STA. TO STA.

F.A.I. RTE.	SECTION	COUNTY	TOTAL SHEETS	SHEET NO.
270	60(B)-1	MADISON	860	34
		CONTRACT NO. 76J90		
	ILLINOIS	FED. AID PROJECT		

SPACE RESERVED FOR RECORDING OFFICER

STATE OF ILLINOIS
DEPARTMENT OF TRANSPORTATION
OFFICE OF HIGHWAYS PROJECT IMPLEMENTATION

PLAT OF HIGHWAYS

FAI ROUTE 270 (I-270)
SECTION 60B-1
MADISON COUNTY
JOB NO. D-98-001-18

SHEET INDEX		
SHEET NO.	STATION to STATION	DESCRIPTION
1		COVER SHEET
2		LEGEND/NOTE SHEET
3	1815+43.51 EB BL to 1844+00.00 EB BL	PAR. 8502001, 8502002, 8502002PE, 8502003, 8502003PE,8502004PE, 8502005PE, 8502006PE
4	1844+00.00 EB BL to 1874+00.00 EB BL	
5	1874+00.00 EB BL to 1905+17.58 EB BL	
6		TOTAL HOLDING
7		TOTAL HOLDING
8		CONTROL & CL TIES SECTION CORNER TIES

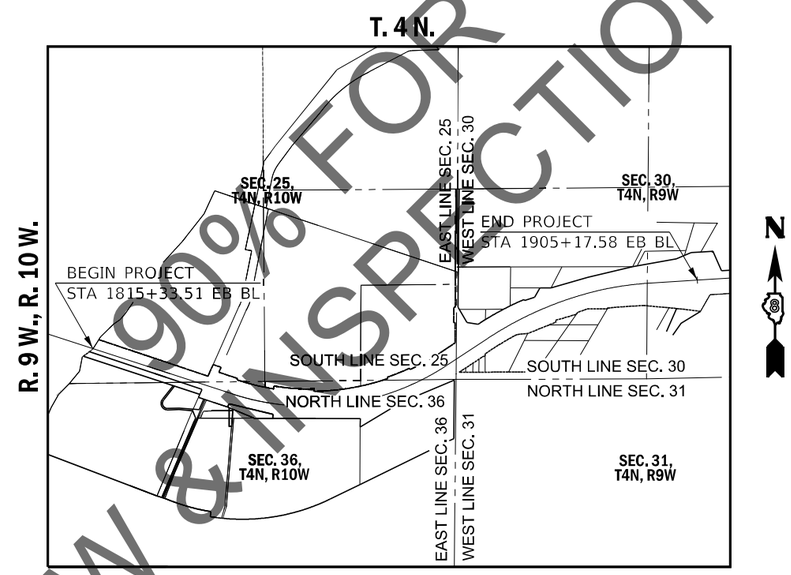

PROJECT LENGTH = 8,966.10 LIN. FT. = 1.6981 MILES

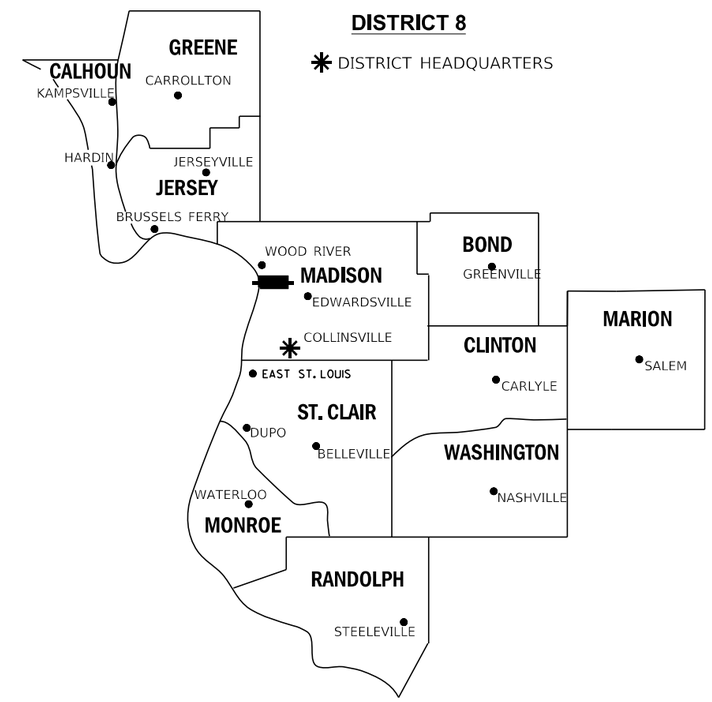

LOCATION OF SECTION INDICATED THUS:

PREPARED BY:

CIVIL DESIGN,INC.
104 N. SECOND ST.
SUITE A
EFFINGHAM, IL 62401

PH. 217-342-2025
IL DESIGN FIRM #184.003222

PROFESSIONAL LAND SURVEYOR
DANIEL J. HOLLAND
035-3907
EFFINGHAM
ILLINOIS
STATE OF ILLINOIS

DANIEL J. HOLLAND, IPLS #3907
EXPIRATION DATE 11/30/2022

REVIEW & INSPECTION ONLY
90% FOR

SHEET 1 OF 8

ILLINOIS DEPARTMENT OF TRANSPORTATION
OFFICE OF HIGHWAYS PROJECT IMPLEMENTATION/REGION 5/DISTRICT 8
1102 EASTPORT PLAZA DRIVE
COLLINSVILLE, ILLINOIS 62234-6198

F.A.I. RTE.	SECTION	COUNTY	TOTAL SHEETS	SHEET NO.
270	60B-1	MADISON	860	35
		CONTRACT NO.		
FED. ROAD DIST. NO.	ILLINOIS	FED. AID PROJECT		

LEGEND FOR EXISTING TOPOGRAPHIC SYMBOLS

- TRAFFIC SIGNAL GULFBOX
- TRAFFIC SIGNAL HANDHOLE
- TRAFFIC SIGNAL SIGNAL POST
- TRAFFIC SIGNAL STEEL MAST ARM
- TRAFFIC SIGNAL PEDESTRIAN PUSH BUTTON
- TRAFFIC SIGNAL WOODEN POLE
- TRAFFIC SIGNAL VEHICLE DETECTION PRIORITY
- TRAFFIC SIGNAL VEHICLE DETECTION MAGNET
- TRAFFIC SIGNAL JUNCTION BOX
- TRAFFIC SIGNAL CONTROLLER
- TRAFFIC SIGNAL HEAVY DUTY HANDHOLE
- RAILROAD CANTILEVER MAST ARM
- RAILROAD CROSSBUCK
- RAILROAD TRACK
- RAILROAD TRACK (ABANDONED)
- RAILROAD CROSSGATE
- RAILROAD CONTROL BOX
- RAILROAD FLASHING SIGNAL
- UTILITY TELEPHONE SPLICE BOX
- UTILITY POWER POLE
- UTILITY TRAFFIC SIGNAL
- UTILITY LIGHT POLE
- UTILITY FIRE HYDRANT
- UTILITY MANHOLE
- UTILITY TELEPHONE POLE
- UTILITY GUY ANCHOR
- UTILITY PIPELINE WARNING SIGN
- UTILITY HANDHOLE
- UTILITY SPLICE BOX
- UTILITY JUNCTION BOX
- UTILITY HEAVY DUTY HANDHOLE
- UTILITY DOUBLE HANDHOLE
- UTILITY CONTROLLER
- UTILITY WATER METER
- DRAINAGE FLOW LINE
- RIP RAP
- HEADWALL
- CULVERT END SECTION
- DRAINAGE MANHOLE
- INLET
- ROADWAY DITCH FLOW
- VEGETATION LINE
- STUMP
- SHRUB
- EVERGREEN TREE
- DECIDUOUS TREE
- WOODS/BUSH LINE
- TRAFFIC SIGN
- GUARDRAIL POST
- GUARDRAIL
- FIELD LINE
- LEVEE/NOISE BARRIER
- FENCE
- MAIL BOX
- ADVERTISING SIGN
- MARSH
- LIGHTING HANDHOLE
- LIGHTING POWER POLE
- LIGHTING JUNCTION BOX
- LIGHTING HEAVYDUTY HANDHOLE
- LIGHTING CONTROLLER
- LIGHTING PULL POINT
- HIGHWAY LIGHTING ELECTRICAL GROUND
- HIGHWAY LIGHTING SINGLE UNIT
- HIGHWAY LIGHTING DOUBLE UNIT
- EXISTING CONCRETE BARRIER
- EXISTING CREEK OR DITCH
- EXISTING EDGE OF PAVEMENT

RIGHT-OF-WAY LEGEND

- SECTION CORNERS
- QUARTER SECTION CORNERS
- EXISTING CENTERLINE
- EXISTING RIGHT-OF-WAY LINE
- FORMER RIGHT-OF-WAY LINE
- EXISTING IDOT EASEMENT LINE
- EXISTING EASEMENT LINE
- BUILDING SETBACK LINE
- EXISTING ACCESS CONTROL LINE
- EXISTING RIGHT-OF-WAY & PROPOSED ACCESS CONTROL LINE
- PROPOSED ACCESS CONTROL LINE
- PROPOSED CENTERLINE
- PROPOSED RIGHT-OF-WAY LINE
- PROPOSED TEMPORARY EASEMENT LINE
- PROPOSED PERMANENT EASEMENT LINE
- SECTION LINE
- QUARTER SECTION LINE
- QUARTER QUARTER SECTION LINE
- PROPERTY LINE (TITLE)
- RECORDED PLAT/DEED LINE
- APPARENT PROPERTY LINE
- SAME OWNERSHIP
- 121.45' MEASURED DIMENSION
- (121.45') RECORDED DIMENSION
- FOUND STONE
- FOUND IRON PIPE OR IRON ROD AT CORNER UNLESS OTHERWISE NOTED
- SET 5/8 INCH IRON ROD WITH PLASTIC CAP IDENTIFIED BY SURVEYORS LICENSE NUMBER AT CORNER UNLESS OTHERWISE NOTED
- PERMANENT SURVEY MONUMENT, I.D.O.T. STD. 667101 (TO BE SET BY OTHERS)
- SET 5/8 INCH IRON ROD AS SURVEY CONTROL UNLESS OTHERWISE NOTED
- FOUND CUT CROSS
- SET CUT CROSS
- STAKING OF PROPOSED RIGHT-OF-WAY AND PERMANENT EASEMENT CORNERS. SET 5/8 INCH METAL ROD WITH DIVISION OF HIGHWAY SURVEY ALUMINUM CAP TO MONUMENT THE POSITION SHOWN. IDENTIFIED BY INSCRIPTION DATA AND SURVEYORS LICENSE NUMBER.
- B STAKING OF PROPOSED RIGHT-OF-WAY AND PERMANENT EASEMENT CORNERS IN CULTIVATED AREA, A MINIMUM OF 20 INCHES BELOW THE GROUND SURFACE. SET 5/8 INCH METAL ROD WITH DIVISION OF HIGHWAY SURVEY ALUMINUM CAP TO MONUMENT THE POSITION SHOWN. IDENTIFIED BY INSCRIPTION DATA AND SURVEYORS LICENSE NUMBER.

LEGEND FOR ABBREVIATIONS

A/C	ACCESS CONTROL
AC	ACRE
AVE	AVENUE
BK	BOOK
BLVD	BOULEVARD
℄	CENTERLINE
CAB	CABINET
CH	COUNTY HIGHWAY
Ch	CHAIN
CP	CONTROL POINT
CPS	COTTON PICKER SPINDLE
DB	DEED BOOK
E	EAST
EX	EXISTING
FA	FEDERAL AID
FAI	FEDERAL AID INTERSTATE
FAP	FEDERAL AID PRIMARY
FAS	FEDERAL AID SECONDARY
FAU	FEDERAL AID URBAN
FND	FOUND
ha	HECTARE
IP	IRON PIPE
IR	IRON ROD
LT	LEFT
m	METER
m^2	SQUARE METERS
N	NORTH
N/F	NOW OR FORMERLY
N & BC	NAIL AND BOTTLE CAP
N & C	NAIL AND CAP
N & W	NAIL AND WASHER
NE	NORTHEAST
NW	NORTHWEST
PB	PLAT BOOK
PG	PAGE
POB	POINT OF BEGINNING
POC	POINT OF COMMENCEMENT
POT	POINT ON TANGENT
⅊	PROPERTY LINE
PR	PROPOSED
R	RANGE
RD	ROAD
REC	RECORD
ROW	RIGHT-OF-WAY
RR	RAILROAD
RRS	RAILROAD SPIKE
RT	RIGHT
RTE	ROUTE
S	SOUTH
SBI	STATE BOND ISSUE
SE	SOUTHEAST
SEC	SECTION
SQ FT	SQUARE FEET
SR	STATE ROUTE
ST	STREET
STA	STATION
SMK	SURVEY MARKER
SW	SOUTHWEST
T	TOWNSHIP
TR	TOWNSHIP ROAD
USGS	U.S. GEOLOGICAL SURVEY
W	WEST

SPACE RESERVED FOR RECORDING OFFICER

PROPOSED PARCEL NUMBER LEGEND

8001001	PROPOSED FEE SIMPLE ACQUISITION
8001001PE	PROPOSED PERMANENT EASEMENT
8001001TE	PROPOSED TEMPORARY EASEMENT
8001001DED	PROPOSED DEDICATION
8001001AC	PROPOSED ACCESS CONTROL LINE

CURVE ABBREVIATIONS

PC	POINT OF CURVATURE
PI	POINT OF INTERSECTION
PT	POINT OF TANGENCY
PRC	POINT OF REVERSE CURVE
PCC	POINT OF COMPOUND CURVE
R	RADIUS OF CURVE
L	LENGTH OF CURVE
CB	CHORD BEARING
C	CHORD LENGTH
D	DEGREE OF CURVE
E	EXTERNAL ORDINATE
Δ	CENTRAL ANGLE

BASIS OF COORDINATE & BEARING STATEMENT

THE COORDINATES AND BEARINGS FOR THIS SURVEY ARE BASED ON THE PROJECT SURVEY CONTROL DATA THAT THE ILLINOIS DEPARTMENT OF TRANSPORTATION (DEPARTMENT) ESTABLISHED AND PROVIDED TO THE SURVEYOR, WHICH IS A "GROUND SURFACE COORDINATE SYSTEM" PREPARED SPECIFICALLY FOR THIS PROJECT.

THE CONTROL POINTS UTILIZED ON THIS PROJECT AND THEIR ASSOCIATED COORDINATES, AS PROVIDED BY THE DEPARTMENT, ARE LISTED IN THE TABLE BELOW.

PROJECT SURVEY CONTROL DATA
GROUND SURFACE COORDINATE SYSTEM

COORDINATES PROVIDED BY THE ILLINOIS DEPARTMENT OF TRANSPORTATION
JOB NO. P-98-001-15 / R-98-002-15

POINT NO.	NORTH (FEET)	EAST (FEET)	DESCRIPTION
1001	764,356.6347	312,111.6856	5/8" X 30" REBAR WITH IDOT CAP
A283	758,344.1501	302,889.5211	SS STEEL ROD / NGS PID: JC1169
CSL23	759,171.5827	289,416.9392	DISK IN CONC / NGS PID: AA8538
CSL24	766,883.0568	292,418.6256	DISK IN CONC. / NGS PID: AA8584
HR-2	760,962.7841	298,188.9532	DISK IN CONC. / LANDFILL MON.
M283	771,610.2217	309,359.3597	SS STEEL ROD / NGS PID: JC1189

IDOT PROVIDED ALIGNMENT PROPOSED FAI ROUTE 270 (I-270)

COORDINATES PROVIDED BY THE ILLINOIS DEPARTMENT OF TRANSPORTATION
JOB NO. P-98-001-15 / R-98-002-15

PNT#/DESC	STATION	OFFSET	NORTH (FEET)	EAST (FEET)
FAI270EB_ST	1740+00.00		765,033.42	289,016.24
FAI270WB_ST	2740+00.00		765,045.41	289,015.68
PC FAI270EB_3	1752+41.60		765,090.61	290,256.51
PT FAI270EB_3	1768+60.23		764,875.90	291,852.06
PC FAI270WB_3	2755+17.16		765,115.29	290,531.24
PT FAI270WB_3	2767+40.13		764,953.06	291,736.76
PC FAI270EB_6	1836+60.01		762,778.14	298,320.16
PT FAI270EB_6	1868+00.58		763,186.90	301,328.78
PC FAI270WB_6	2837+14.45		762,801.46	298,370.89
PT FAI270WB_6	2867+60.17		763,195.72	301,289.28
PC FAI270EB_9	1875+03.97		763,574.54	301,915.72
PT FAI270EB_9	1899+03.64		764,327.29	304,165.69
PC FAI270WB_9	2874+51.08		763,575.62	301,866.37
PT FAI270WB_9	2884+71.97		764,037.85	302,774.26
PC FAI270WB_10	2884+71.97		764,037.26	302,774.26
PT FAI270WB_10	2891+94.85		764,249.48	303,464.70
PC FAI270WB_11	2891+94.85		764,249.48	303,464.70
PT FAI270WB_11	2898+40.28		764,334.48	304,103.97
FAI270EB_END	1905+15.37		764,376.32	304,777.77
FAI270WB_END	2905+17.58		764,365.34	304.778.45

TOPOGRAPHIC STATEMENT

THE TOPOGRAPHY SHOWN HEREON WAS PROVIDED TO THE SURVEYOR BY THE ILLINOIS DEPARTMENT OF TRANSPORTATION. THE SURVEYOR VISUALLY FIELD VERIFIED THE EXISTENCE OF THE TOPOGRAPHY SHOWN HEREON.

TOTAL HOLDING AREA SOURCE TABLE

1	AREA ACCORDING TO THE SURVEY PERFORMED BY THE CONSULTANT.
2	AREA LISTED IN RECORDED DEED.
3	AREA ACCORDING TO A RECORDED SUBDIVISION PLAT.
4	AREA ACCORDING TO A PLAT OF SURVEY.
5	AREA CALCULATED FROM RECORDED DEEDS OR TITLE COMMITMENTS - NOT SURVEYED.
6	AREA ACCORDING TO COUNTY TAX MAPS AND COUNTY ASSESSMENT RECORDS.
7	AREA ACCORDING TO OTHER RECORDS, SEE NOTE ON THE PLAT OF HIGHWAYS.

PREPARED BY:

CIVIL DESIGN,INC.
104 N. SECOND ST.
SUITE A
EFFINGHAM, IL 62401

PH. 217-342-2025
IL DESIGN FIRM #184.003222

PROFESSIONAL LAND SURVEYOR
DANIEL J. HOLLAND
035-3907
EFFINGHAM
ILLINOIS
STATE OF ILLINOIS

DANIEL J. HOLLAND, IPLS #3907
EXPIRATION DATE 11/30/2022

ILLINOIS DEPARTMENT OF TRANSPORTATION
PLAT OF HIGHWAYS
FAI ROUTE 270 (I-270)
SECTION 60B-1
MADISON COUNTY
JOB NO. D-98-001-18
STATION 1815+43.51 EB BL TO STATION 1905+17.58 EB BL

SHEET 2 OF 8

ILLINOIS DEPARTMENT OF TRANSPORTATION
OFFICE OF HIGHWAYS PROJECT IMPLEMENTATION/REGION 5/DISTRICT 8
1102 EASTPORT PLAZA DRIVE
COLLINSVILLE, ILLINOIS 62234-6198

F.A.I. RTE.	SECTION	COUNTY	TOTAL SHEETS	SHEET NO.
270	60B-1	MADISON	860	36
		CONTRACT NO.		
FED. ROAD DIST. NO.	ILLINOIS	FED. AID PROJECT		

REVIEW & INSPECTION ONLY FOR 90% PLAN

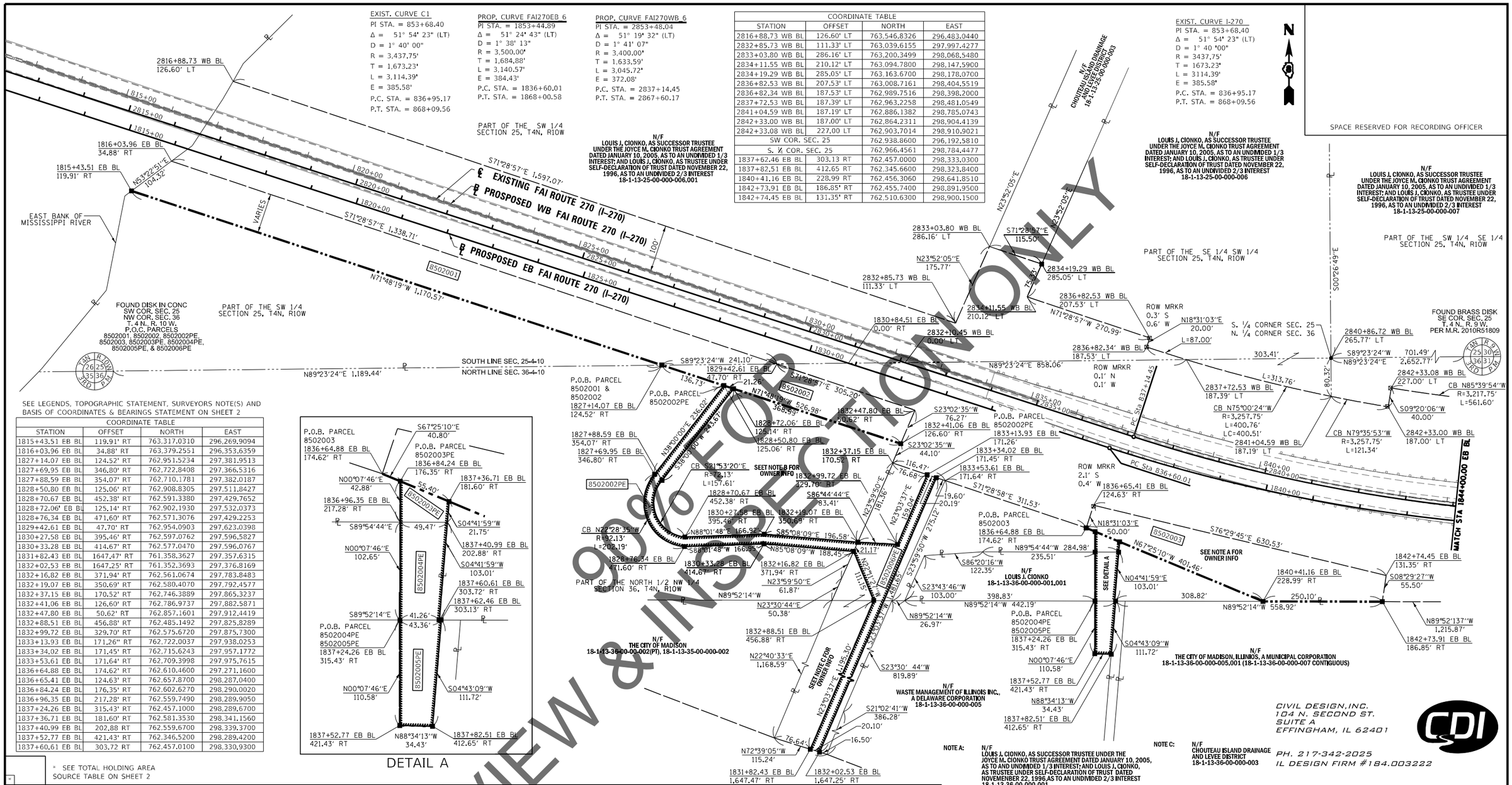

SEE LEGENDS, TOPOGRAPHIC STATEMENT, SURVEYORS NOTE(S) AND BASIS OF COORDINATES & BEARINGS STATEMENT ON SHEET 2

COORDINATE TABLE

STATION	OFFSET	NORTH	EAST
1815+43.51 EB BL	119.91' RT	763,317.0310	296,269.9094
1816+03.96 EB BL	34.88' RT	763,379.2551	296,353.6359
1827+14.07 EB BL	124.52' RT	762,951.5234	297,381.9513
1827+69.95 EB BL	346.80' RT	762,722.8408	297,366.5316
1827+88.59 EB BL	354.07' RT	762,710.1781	297,382.0187
1828+50.80 EB BL	125.06' RT	762,908.8305	297,511.8427
1828+70.67 EB BL	452.38' RT	762,591.3380	297,429.7652
1828+72.06' EB BL	125.14' RT	762,902.1930	297,532.0373
1828+76.34 EB BL	471.60' RT	762,571.3076	297,429.2253
1829+42.61 EB BL	47.70' RT	762,954.0903	297,623.0398
1830+27.58 EB BL	395.46' RT	762,597.0762	297,596.5827
1830+33.28 EB BL	414.67' RT	762,577.0470	297,596.0767
1831+82.43 EB BL	1647.47' RT	761,358.3627	297,357.6315
1832+02.53 EB BL	1647.25' RT	761,352.3693	297,376.8169
1832+16.82 EB BL	371.94' RT	762,561.0674	297,783.8483
1832+19.07 EB BL	350.69' RT	762,580.4070	297,792.4577
1832+37.15 EB BL	170.52' RT	762,746.3889	297,865.3237
1832+41.06 EB BL	126.60' RT	762,786.9737	297,882.5871
1832+47.80 EB BL	50.62' RT	762,857.1601	297,912.4419
1832+88.51 EB BL	456.88' RT	762,485.1492	297,825.8289
1832+99.72 EB BL	329.70' RT	762,575.6720	297,875.7300
1833+13.93 EB BL	171.26" RT	762,722.0037	297,938.0253
1833+34.02 EB BL	171.45' RT	762,715.6243	297,957.1772
1833+53.61 EB BL	171.64' RT	762,709.3998	297,975.7615
1836+64.88 EB BL	174.62' RT	762,610.4600	297,271.1600
1836+65.41 EB BL	124.63' RT	762,657.8700	298,287.0400
1836+84.24 EB BL	176.35' RT	762,602.6270	298,290.0020
1836+96.35 EB BL	217.28' RT	762,559.7490	298,289.9050
1837+24.26 EB BL	315.43' RT	762,457.1000	298,289.6700
1837+36.71 EB BL	181.60' RT	762,581.3530	298,341.1560
1837+40.99 EB BL	202.88 RT	762,559.6700	298,339.3700
1837+52.77 EB BL	421.43' RT	762,346.5200	298,289.4200
1837+60.61 EB BL	303.72 RT	762,457.0100	298,330.9300

COORDINATE TABLE

STATION	OFFSET	NORTH	EAST
2816+88.73 WB BL	126.60' LT	763,546.8326	296,483.0440
2832+85.73 WB BL	111.33' LT	763,039.6155	297,997.4277
2833+03.80 WB BL	286.16' LT	763,200.3499	298,068.5480
2834+11.55 WB BL	210.12' LT	763,094.7800	298,147.5900
2834+19.29 WB BL	285.05' LT	763,163.6700	298,178.0700
2836+82.53 WB BL	207.53' LT	763,008.7161	298,404.5519
2836+82.34 WB BL	187.53' LT	762,989.7516	298,398.2000
2837+72.53 WB BL	187.39' LT	762,963.2258	298,481.0549
2841+04.59 WB BL	187.19' LT	762,886.1382	298,785.0743
2842+33.00 WB BL	187.00' LT	762,864.2311	298,904.4139
2842+33.08 WB BL	227.00 LT	762,903.7014	298,910.9021
SW COR. SEC. 25		762,938.8600	296,192.5810
S. ¼ COR. SEC. 25		762,966.4561	298,784.4477
1837+62.46 EB BL	303.13 RT	762,457.0000	298,333.0300
1837+82.51 EB BL	412.65 RT	762,345.6600	298,323.8400
1840+41.16 EB BL	228.99 RT	762,456.3060	298,641.8510
1842+73.91 EB BL	186.85' RT	762,455.7400	298,891.9500
1842+74.45 EB BL	131.35' RT	762,510.6300	298,900.1500

* SEE TOTAL HOLDING AREA SOURCE TABLE ON SHEET 2

PARCEL NO.	OWNER	TOTAL HOLDING ACRES	FEE SIMPLE ACQUISITION ACRES	FEE SIMPLE ACQUISITION SQ. FT.	REMAINDER ACRES	EASEMENTS PE = PERMANENT ACRES	EASEMENTS PE = PERMANENT SQ FT	EASEMENT PURPOSE	PERMANENT TAX NUMBER AFFECTED	PROPERTY ACQUIRED BY
8502001	LOUIS J. CIONKO, AS SUCCESSOR TRUSTEE UNDER THE JOYCE M. CIONKO TRUST AGREEMENT DATED JANUARY 10, 2005, AS TO AND UNDIVIDED 1/3 INTEREST; AND LOUIS J. CIONKO, AS TRUSTEE UNDER SELF-DECLARATION OF TRUST DATED NOVEMBER 22, 1996, AS TO AN UNDIVIDED 2/3 INTEREST I8-2014MA-4853.3	71.4769 1	2.3595	102,780	69.1174				18-1-13-25-00-000-006.001 (pt)	
8502002 & 8502002PE	LOUIS J. CIONKO, AS SUCCESSOR TRUSTEE UNDER THE JOYCE M. CIONKO TRUST AGREEMENT DATED JANUARY 10, 2005, AS TO AND UNDIVIDED 1/3 INTEREST; AND LOUIS J. CIONKO, AS TRUSTEE UNDER SELF-DECLARATION OF TRUST DATED NOVEMBER 22, 1996, AS TO AN UNDIVIDED 2/3 INTEREST I8-2014MA-4853.2	21.4467 1	0.7365	32,081	20.7102	0.3578	15,584	ACCESS ROAD INGRESS/EGRESS	18-1-13-25-00-000-006.001 (pt) 18-1-13-36-00-000-001.002 18-1-13-35-00-000-001	
8502003 & 8502003PE	LOUIS J. CIONKO, AS SUCCESSOR TRUSTEE UNDER THE JOYCE M. CIONKO TRUST AGREEMENT DATED JANUARY 10, 2005, AS TO AND UNDIVIDED 1/3 INTEREST; AND LOUIS J. CIONKO, AS TRUSTEE UNDER SELF-DECLARATION OF TRUST DATED NOVEMBER 22, 1996, AS TO AN UNDIVIDED 2/3 INTEREST I8-2014MA-4853.4	2.5728 1	1.2063	52,547	1.3665	0.0375	1,634	DRAINAGE	18-1-13-36-00-000-001	
8502004PE	LOUIS J. CIONKO I8-2014MA-4834.0	1				0.1069	4,657	DRAINAGE	18-1-13-36-00-000-001.001	
8502005PE	WASTE MANAGEMENT OF ILLINOIS INC., A DELEWARE CORPORATION I8-2014MA-4857.0	1				0.0991	4,317	DRAINAGE	18-1-13-36-00-000-005	

NOTE A: N/F LOUIS J. CIONKO, AS SUCCESSOR TRUSTEE UNDER THE JOYCE M. CIONKO TRUST AGREEMENT DATED JANUARY 10, 2005, AS TO AND UNDIVIDED 1/3 INTEREST; AND LOUIS J. CIONKO, AS TRUSTEE UNDER SELF-DECLARATION OF TRUST DATED NOVEMBER 22, 1996, AS TO AN UNDIVIDED 2/3 INTEREST 18-1-13-36-00-000-001

NOTE B N/F LOUIS J. CIONKO, AS SUCCESSOR TRUSTEE UNDER THE JOYCE M. CIONKO TRUST AGREEMENT DATED JANUARY 10, 2005, AS TO AND UNDIVIDED 1/3 INTEREST; AND LOUIS J. CIONKO, AS TRUSTEE UNDER SELF-DECLARATION OF TRUST DATED NOVEMBER 22, 1996, AS TO AN UNDIVIDED 2/3 INTEREST 18-1-13-35-00-000-001, 18-1-13-36-00-000-001.002, 18-1-13-25-00-000-006.001(PT)

NOTE C: N/F CHOUTEAU ISLAND DRAINAGE AND LEVEE DISTRICT 18-1-13-36-00-000-003

STATE OF ILLINOIS)
) SS
COUNTY OF EFFINGHAM)

I, DANIEL J. HOLLAND, AN ILLINOIS PROFESSIONAL LAND SURVEYOR, STATE THAT I HAVE SURVEYED THE PLAT OF HIGHWAY SHOWN HEREON AND THAT THIS PROFESSIONAL SERVICE CONFORMS TO THE CURRENT ILLINOIS MINIMUM STANDARDS FOR A BOUNDARY SURVEY FOR THE PROPOSED PARCEL(S) TO BE ACQUIRED BY THE STATE OF ILLINOIS, DEPARTMENT OF TRANSPORTATION, SHOWN HEREON.

DATED _____

DANIEL J. HOLLAND, PLS NO. 3907
LICENSE EXPIRATION DATE: 11/30/2022

PROFESSIONAL LAND SURVEYOR DANIEL J. HOLLAND 035-3907 EFFINGHAM ILLINOIS STATE OF ILLINOIS

COMPLETION DATE OF FIELD WORK PERFORMED	
LAND SURVEY: 10/10/17	ROW STAKING:

ILLINOIS DEPARTMENT OF TRANSPORTATION
PLAT OF HIGHWAYS
FAI 270 (I-270)
SECTION 60B-1
MADISON COUNTY
JOB NO. D-98-001-18

STATION 1815+43.51 EB BL TO STATION 1844+00.00 EB BL

100' 0 100' 200'
SCALE: 1" = 100'

SHEET 3 OF 8

ILLINOIS DEPARTMENT OF TRANSPORTATION
OFFICE OF HIGHWAYS PROJECT IMPLEMENTATION/REGION 5/DISTRICT 8
1102 EASTPORT PLAZA DRIVE
COLLINSVILLE, ILLINOIS 62234-6198

F.A.I. RTE.	SECTION	COUNTY	TOTAL SHEETS	SHEET NO.
270	60B-1	MADISON	860	37

CONTRACT NO.

FED. ROAD DIST. NO. | ILLINOIS | FED. AID PROJECT

SEE LEGENDS, TOPOGRAPHIC STATEMENT, SURVEYORS NOTE(S) AND BASIS OF COORDINATES & BEARINGS STATEMENT ON SHEET 2

COORDINATE TABLE

STATION	OFFSET	NORTH	EAST
2848+34.72 WB BL	225.29' LT	762,861.3057	299,470.1878
2848+34.59 WB BL	195.29' LT	762,831.3077	299,470.5360
2855+18.31 WB BL	191.73' LT	762,902.5372	300,110.3235
2855+37.01 WB BL	267.80' LT	762,980.5775	300,110.7584
2858+54.69 WB BL	189.38 LT	762,983.8397	300,417.1440
2859+36.09 WB BL	188.76 LT	763,008.0014	300,490.1155
2859+36.26 WB BL	208.76 LT	763,026.9120	300,483.6047
2862+86.22 WB BL	205.85' LT	763,149.5103	300,788.3461
2862+86.02 WB BL	185.85' LT	763,131.3594	300,796.7452
2867+96.66 WB BL	181.18' LT	763,367.1189	301,220.1410
2870+37.33 WB BL	182.68' LT	763,500.6973	301,420.3366
1854+27.36 EB BL	222.37' RT	762,452.9935	300,107.8187
1854+06.12 EB BL	339.23' RT	762,333.8954	300,107.1551
1860+19.59 EB BL	158.47' RT	762,684.1829	300,690.5751
1867+60.73 EB BL	215.16' RT	762,984.2479	301,411.9392
1868+75.37 EB BL	159.80' RT	763,094.7684	301,479.2627
1872+73.00 EB BL	160.18' RT	763,313.5931	301,811.2664
1872+96.16 EB BL	175.36' RT	763,313.6910	301,838.9620
1873+16.41 EB BL	145.22' RT	763,350.0017	301,839.2492
SW COR. SEC. 30		762,994.6990	301,437.0690

EXIST. CURVE C1
PI STA. = 853+68.40
Δ = 51° 54' 23" (LT)
D = 1° 40' 00"
R = 3,437.75'
T = 1,673.23'
L = 3,114.39'
E = 385.58'
P.C. STA. = 836+95.17
P.T. STA. = 868+09.56

PROP. CURVE FAI270EB_6
PI STA. = 1853+44.89
Δ = 51° 24' 43" (LT)
D = 1° 38' 13"
R = 3,500.00'
T = 1,684.88'
L = 3,140.57'
E = 384.43'
P.C. STA. = 1836+60.01
P.T. STA. = 1868+00.58

PROP. CURVE FAI270WB_6
PI STA. = 2853+48.04
Δ = 51° 19' 32" (LT)
D = 1° 41' 07"
R = 3,400.00'
T = 1,633.59'
L = 3,045.72'
E = 372.08'
P.C. STA. = 2837+14.45
P.T. STA. = 2867+60.17

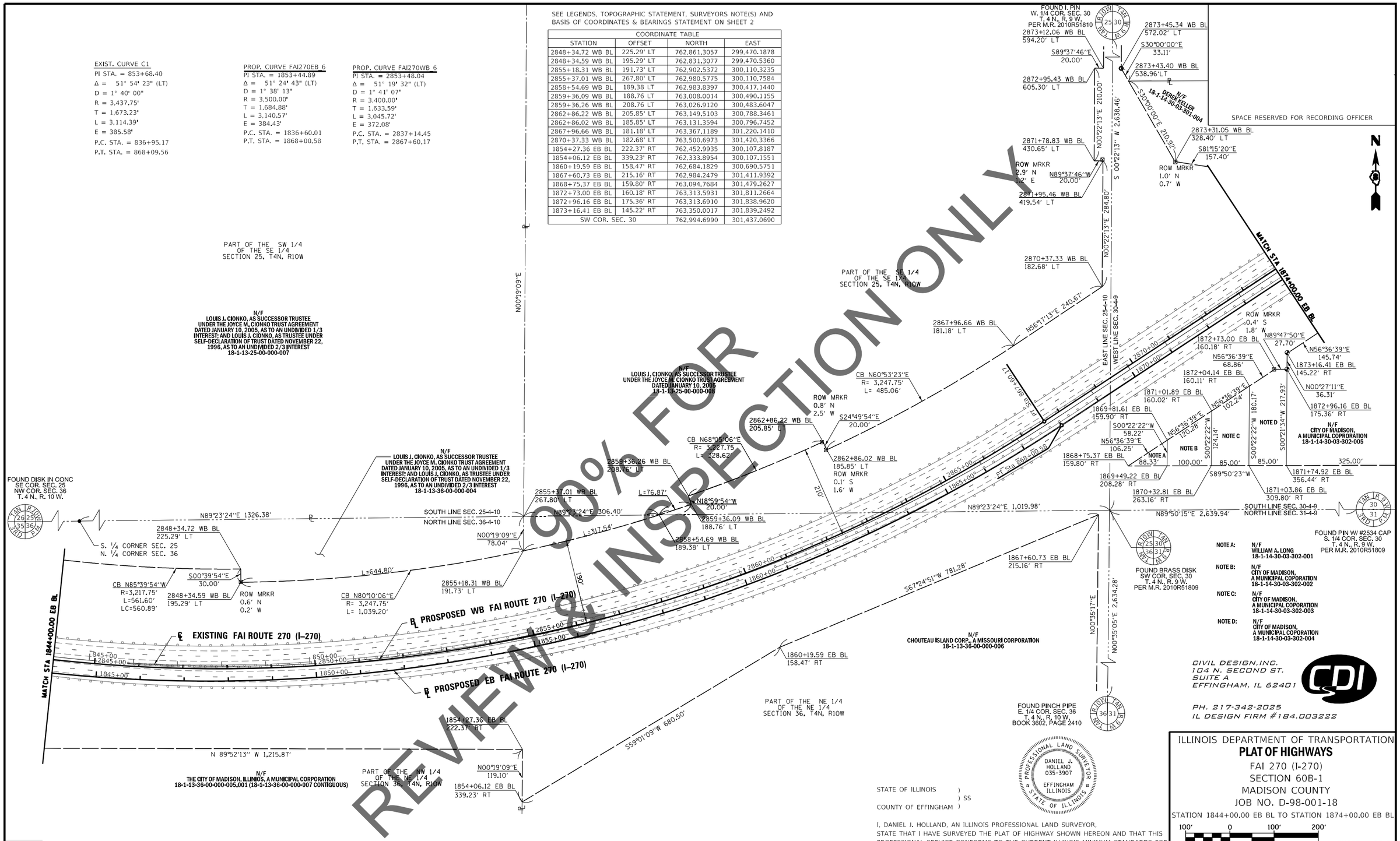

90% FOR REVIEW & INSPECTION ONLY

STATE OF ILLINOIS)
) SS
COUNTY OF EFFINGHAM)

I, DANIEL J. HOLLAND, AN ILLINOIS PROFESSIONAL LAND SURVEYOR, STATE THAT I HAVE SURVEYED THE PLAT OF HIGHWAY SHOWN HEREON AND THAT THIS PROFESSIONAL SERVICE CONFORMS TO THE CURRENT ILLINOIS MINIMUM STANDARDS FOR A BOUNDARY SURVEY FOR THE PROPOSED PARCEL(S) TO BE ACQUIRED BY THE STATE OF ILLINOIS. DEPARTMENT OF TRANSPORTATION, SHOWN HEREON.

DATED _____

DANIEL J. HOLLAND, PLS NO. 3907
LICENSE EXPIRATION DATE: 11/30/2022

ILLINOIS DEPARTMENT OF TRANSPORTATION
PLAT OF HIGHWAYS
FAI 270 (I-270)
SECTION 60B-1
MADISON COUNTY
JOB NO. D-98-001-18

STATION 1844+00.00 EB BL TO STATION 1874+00.00 EB BL

100' 0 100' 200'
SCALE: 1" = 100'

SHEET 4 OF 8

ILLINOIS DEPARTMENT OF TRANSPORTATION
OFFICE OF HIGHWAYS PROJECT IMPLEMENTATION/REGION 5/DISTRICT 8
1102 EASTPORT PLAZA DRIVE
COLLINSVILLE, ILLINOIS 62234-6198

F.A.I. RTE.	SECTION	COUNTY	TOTAL SHEETS	SHEET NO.
270	60B-1	MADISON	860	38

CONTRACT NO.

FED. ROAD DIST. NO. | ILLINOIS | FED. AID PROJECT

COMPLETION DATE OF FIELD WORK PERFORMED
LAND SURVEY: 10/10/18 ROW STAKING:

* SEE TOTAL HOLDING AREA SOURCE TABLE ON SHEET 2

PARCEL NO.	OWNER	TOTAL HOLDING	FEE SIMPLE ACQUISITION		REMAINDER	EASEMENTS PE = PERMANENT		EASEMENT PURPOSE	PERMANENT TAX NUMBER AFFECTED	PROPERTY ACQUIRED BY
		ACRES	ACRES	SQ. FT.	ACRES	ACRES	SQ FT			
8502006PE	CHOUTEAU ISLAND DRAINAGE AND LEVEE DISTRICT I8-2014MA-4853.1	1				0.8151	35,505	ACCESS ROAD INGRESS/EGRESS	18-1-13-36-00-000-003	

EX CURVE HDRFAI270_3
PI STA. = 2173+81.22
Δ = 30° 01' 30" (RT)
D = 1° 14' 44"
R = 4,600.00'
T = 1,233.64'
L = 2,410.56'
E = 162.55'
P.C. STA = 2161+47.58
P.T. STA = 2185+58.14

PROP. CURVE FAI270EB_9
PI STA. = 1887+31.77
Δ = 29° 53' 22" (RT)
D = 1° 14' 44"
R = 4,600.00'
T = 1,227.81'
L = 2,399.67'
P.C. STA. = 1875+03.97
P.T. STA. = 1899+03.64

PROP. CURVE FAI270WB_9
PI STA. = 2879+63.64
Δ = 12° 44' 56" (RT)
D = 1° 14' 56"
R = 4,588.00'
T = 512.56'
L = 1,020.89'
P.C. STA. = 2874+51.08
P.T. STA. = 2884+71.97

PROP. CURVE FAI270WB_10
PI STA. = 2888+34.15
Δ = 8° 58' 06" (RT)
D = 1° 14' 26"
R = 4,618.31'
T = 362.18'
L = 722.89'
P.C. STA. = 2884+71.97
P.T. STA. = 2891+94.85

PROP. CURVE FAI270WB_11
PI STA. = 2895+18.10
Δ = 8° 02' 21" (RT)
D = 1° 14' 44"
R = 4,600.00'
T = 323.24'
L = 645.43'
P.C. STA. = 2891+94.85
P.T. STA. = 2898+40.28

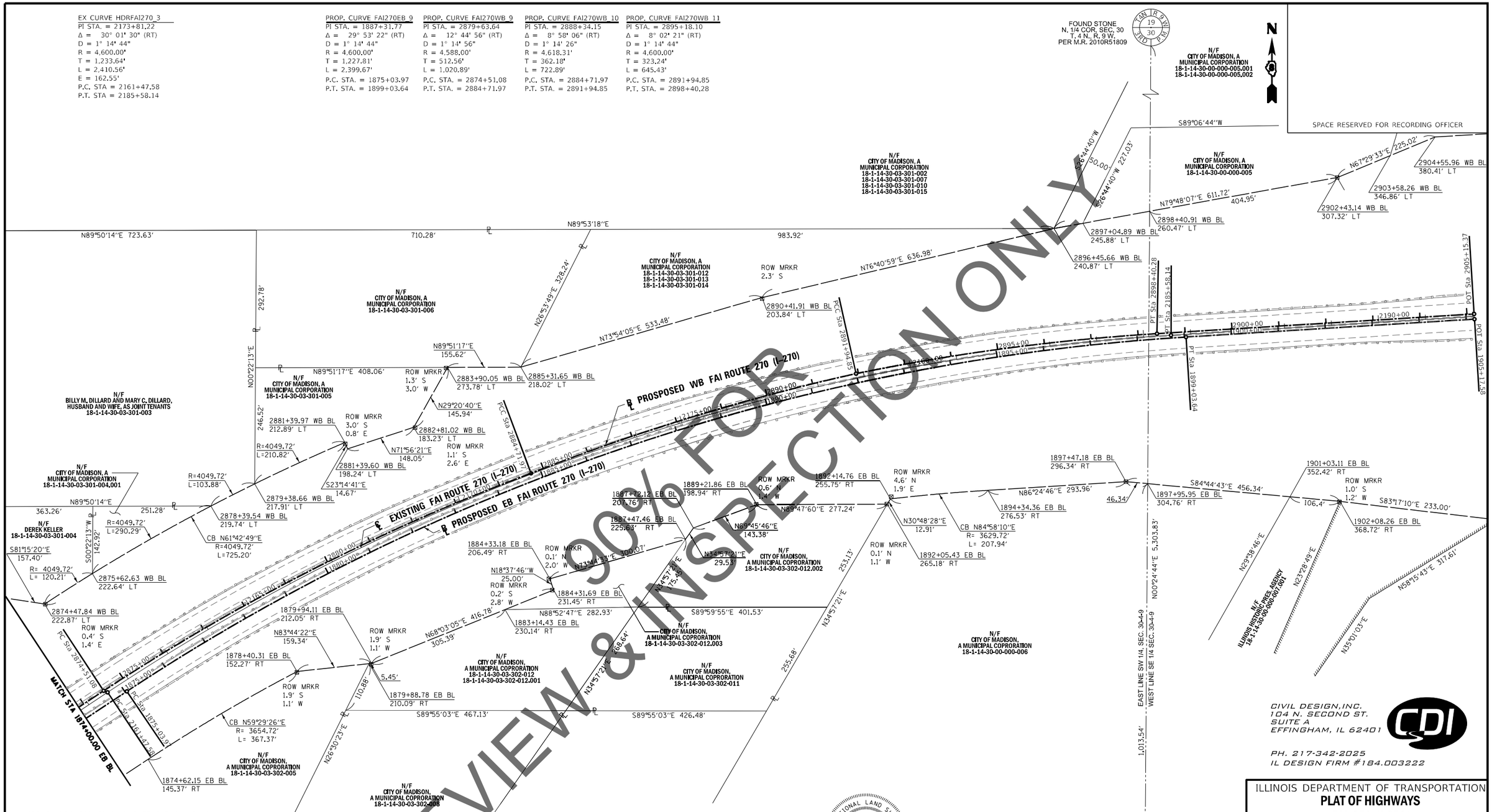

PREVIEW & INSPECTION ONLY
90% FOR

SEE LEGENDS, TOPOGRAPHIC STATEMENT, SURVEYORS NOTE(S) AND BASIS OF COORDINATES & BEARINGS STATEMENT ON SHEET 2

COORDINATE TABLE

STATION	OFFSET	NORTH	EAST
1874+62.15 EB BL	145.37' RT	763,430.2043	301,960.9337
1878+40.31 EB BL	152.27' RT	763,616.6335	302,277.3100
1879+94.11 EB BL	212.05' RT	763,634.0094	302,435.7001
1884+31.69 EB BL	231.45' RT	763,789.7900	302,822.2730
1884+33.18 EB BL	206.49' RT	763,813.4801	302,814.2867
1887+47.46 EB BL	225.63' RT	763,897.4846	303,102.3551
1887+72.12 EB BL	207.76' RT	763,921.6835	303,119.2716
1889+21.86 EB BL	198.94' RT	763,971.2789	303,253.7996
1892+05.43 EB BL	265.18' RT	763,972.2470	303,531.0400
1892+14.76 EB BL	255.75' RT	763,983.3320	303,537.6500
1894+34.36 EB BL	276.53' RT	764,001.5635	303,744.7680
1897+47.87 EB BL	296.34' RT	764,019.9560	304,038.1520
1902+08.26 EB BL	368.72' RT	763,978.1626	304,492.5753

COORDINATE TABLE

STATION	OFFSET	NORTH	EAST
2874+47.84 WB BL	222.87' LT	763,759.9940	301,741.1170
2881+39.97 WB BL	212.89' LT	764,103.1910	302,378.8650
2881+39.60 WB BL	198.24' LT	764,089.7152	302,384.6532
2882+81.02 WB BL	183.23' LT	764,135.6150	302,525.4110
2883+90.05 WB BL	273.78' LT	764,262.8270	302,596.9290
2885+31.65 WB BL	218.02' LT	764,263.2209	302,752.5462
2890+41.91 WB BL	203.84' LT	764,411.1503	303,265.1062
2896+45.66 WB BL	240.87' LT	764,557.8700	303,884.9590
2898+40.91 WB BL	260.47' LT	764,594.4785	304,088.4606
2902+43.14 WB BL	307.32' LT	764,666.1749	304,487.0109
2904+55.96 WB BL	380.41' LT	764,752.3110	304,694.8870

STATE OF ILLINOIS)
) SS
COUNTY OF EFFINGHAM)

I, DANIEL J. HOLLAND, AN ILLINOIS PROFESSIONAL LAND SURVEYOR, STATE THAT I HAVE SURVEYED THE PLAT OF HIGHWAY SHOWN HEREON AND THAT THIS PROFESSIONAL SERVICE CONFORMS TO THE CURRENT ILLINOIS MINIMUM STANDARDS FOR A BOUNDARY SURVEY FOR THE PROPOSED PARCEL(S) TO BE ACQUIRED BY THE STATE OF ILLINOIS, DEPARTMENT OF TRANSPORTATION, SHOWN HEREON.

DATED _____

DANIEL J. HOLLAND, PLS NO. 3907
LICENSE EXPIRATION DATE: 11/30/2022

PROFESSIONAL LAND SURVEYOR
DANIEL J. HOLLAND
035-3907
EFFINGHAM
ILLINOIS
STATE OF ILLINOIS

COMPLETION DATE OF FIELD WORK PERFORMED	
LAND SURVEY: 10/10/18	ROW STAKING:

CIVIL DESIGN, INC.
104 N. SECOND ST.
SUITE A
EFFINGHAM, IL 62401
PH. 217-342-2025
IL DESIGN FIRM #184.003222

ILLINOIS DEPARTMENT OF TRANSPORTATION
PLAT OF HIGHWAYS
FAI 270 (I-270)
SECTION 60B-1
MADISON COUNTY
JOB NO. D-98-001-18
STATION 1874+00.00 EB BL TO STATION 1905+17.58 EB BL

100' 0 100' 200'
SCALE: 1" = 100'

SHEET 5 OF 8

ILLINOIS DEPARTMENT OF TRANSPORTATION
OFFICE OF HIGHWAYS PROJECT IMPLEMENTATION/REGION 5/DISTRICT 8
1102 EASTPORT PLAZA DRIVE
COLLINSVILLE, ILLINOIS 62234-6198

F.A.I. RTE.	SECTION	COUNTY	TOTAL SHEETS	SHEET NO.
270	60B-1	MADISON	860	39
		CONTRACT NO.		
FED. ROAD DIST. NO.	ILLINOIS	FED. AID PROJECT		

TOTAL HOLDING SKETCH PARCELS 8502001, 8502002, & 8502002PE

REVIEW & INSPECTION ONLY
90% FOR

N24°58'44"E 353.01'
S71°30'00"E 588.19'
S71°30'00"E 195.62'
S89°40'27"W 2690.40'
N38°04'08"E 484.73'
S12°01'08"W 640.44'
S71°30'00"E 2756.52'
N42°22'13"E 528.60'
S78°54'05"E 89.27'
S11°05'55"W 1222.31'
S11°05'55"W 609.80'
N00°29'49"W 2651.43'
N36°16'57"E 397.34'
S00°22'13"W 170.60'
S89°23'24"W 1327.56'
N34°36'42"E 339.98'
CB S18°58'45"W R=516.89' L=191.16' LC-192.27'
CB S18°50'10"W R=631.89' L=226.04' LC-224.84'
N40°14'58"E 117.45'
N55°48'06"E 121.84'
S00°19'09"W 1319.45'
N29°54'21"E 43.63'
N29°54'21"E 43.28'
S45°23'11"W 246.42'
N33°16'52"E 116.60'
N53°22'51"E 54.63'
N53°22'51"E 121.87'
S71°28'57"E 1,597.07'
S71°28'57"E 1,338.71'
8502001
EAST BANK OF MISSISSIPPI RIVER
N39°42'04"E 222.13'
N10°59'17"E 201.74'
N44°08'04"E 213.91'
N29°43'11"E 203.88'
N89°23'24"E 117.12'
N24°50'40"E 158.91'
N89°23'24"E 1,430.54'
N89°52'14"W 1979.92'
S71°28'57"E 115.50'
N23°52'05"E 175.77'
S71°28'57"E 305.20'
S71°28'57"E 270.99'
75.33'
S18°31'03"W 20.00'
S. 1/4 CORNER SEC. 25
N. 1/4 CORNER SEC. 36
303.41'
80.32'
S89°23'24"W 1,326.39'
S00°19'09"W 78.04'
8502002
S23°02'35"W 120.38'
116.47'
S71°28'58"E 311.53'
8502002PE
N23°59'50"E 264.40'
S23°30'44"W 50.38'
N23°59'50"E 275.12'
N22°40'33"E 1168.59'
S23°50'44"W 819.89'
CB S75°00'24"E R=3,257.75' L=400.76' LC-400.51'
CB S79°35'53"E R=3,257.75' L=121.34'
CB S85°39'54"E R=3,217.75' L=561.60'
N09°20'06"E 40.00'
S09°20'06"W 40.00'
CB N83°38'50"E R= 3,247.75' L= 644.80' LC= 643.74'
S23°52'05"W 873.92'
CHOUTEAU ISLAND DRAINAGE AND LEVEE DISTRICT 18-1-13-25-00-000-003
S23°52'05"W 856.74'

N/F
LOUIS J. CIONKO, AS SUCCESSOR TRUSTEE UNDER THE JOYCE M. CIONKO TRUST AGREEMENT DATED JANUARY 10, 2005, AS TO AN UNDIVIDED 1/3 INTEREST; AND LOUIS J. CIONKO, AS TRUSTEE UNDER SELF-DECLARATION OF TRUST DATED NOVEMBER 22, 1996, AS TO AN UNDIVIDED 2/3 INTEREST
18-1-13-25-00-000-007

N/F
LOUIS J. CIONKO, AS SUCCESSOR TRUSTEE UNDER THE JOYCE M. CIONKO TRUST AGREEMENT DATED JANUARY 10, 2005, AS TO AN UNDIVIDED 1/3 INTEREST; AND LOUIS J. CIONKO, AS TRUSTEE UNDER SELF-DECLARATION OF TRUST DATED NOVEMBER 22, 1996, AS TO AN UNDIVIDED 2/3 INTEREST
18-1-13-25-00-000-006

N/F
LOUIS J. CIONKO, AS SUCCESSOR TRUSTEE UNDER THE JOYCE M. CIONKO TRUST AGREEMENT DATED JANUARY 10, 2005, AS TO AN UNDIVIDED 1/3 INTEREST; AND LOUIS J. CIONKO, AS TRUSTEE UNDER SELF-DECLARATION OF TRUST DATED NOVEMBER 22, 1996, AS TO AN UNDIVIDED 2/3 INTEREST
18-1-13-25-00-000-006.001

PART OF THE SW 1/4 SECTION 25, T4N, R10W

PART OF THE SE 1/4 SW 1/4 SECTION 25, T4N, R10W

PART OF THE SW 1/4 SE 1/4 SECTION 25, T4N, R10W

FOUND DISK IN CONC SW COR. SEC. 25 NW COR. SEC. 36 T. 4 N., R. 10 W. P.O.C. PARCELS 8502001, 8502002, 8502003, 8502004, & 8502005PE

FOUND BRASS DISK SE COR. SEC. 25 NE COR. SEC. 36 T. 4 N., R. 9 W. PER M.R. 2010R51809

N/F
LOUIS J. CIONKO, AS SUCCESSOR TRUSTEE UNDER THE JOYCE M. CIONKO TRUST AGREEMENT DATED JANUARY 10, 2005, AS TO AND UNDIVIDED 1/3 INTEREST; AND LOUIS J. CIONKO, AS TRUSTEE UNDER SELF-DECLARATION OF TRUST DATED NOVEMBER 22, 1996, AS TO AN UNDIVIDED 2/3 INTEREST
18-1-13-35-00-000-001, 18-1-13-36-00-000-001.002, 18-1-13-25-00-000-006.001(PT)

CIVIL DESIGN, INC.
104 N. SECOND ST.
SUITE A
EFFINGHAM, IL 62401

PH. 217-342-2025
IL DESIGN FIRM #184.003222

STATE OF ILLINOIS)
) SS
COUNTY OF EFFINGHAM)

I, DANIEL J. HOLLAND, AN ILLINOIS PROFESSIONAL LAND SURVEYOR, STATE THAT I HAVE SURVEYED THE PLAT OF HIGHWAY SHOWN HEREON AND THAT THIS PROFESSIONAL SERVICE CONFORMS TO THE CURRENT ILLINOIS MINIMUM STANDARDS FOR A BOUNDARY SURVEY FOR THE PROPOSED PARCEL(S) TO BE ACQUIRED BY THE STATE OF ILLINOIS, DEPARTMENT OF TRANSPORTATION, SHOWN HEREON.

DATED _____

DANIEL J. HOLLAND, PLS NO. 3907
LICENSE EXPIRATION DATE: 11/30/2022

PROFESSIONAL LAND SURVEYOR
DANIEL J. HOLLAND
035-3907
EFFINGHAM ILLINOIS
STATE OF ILLINOIS

ILLINOIS DEPARTMENT OF TRANSPORTATION
PLAT OF HIGHWAYS

FAI 270 (I-270)
SECTION 60B-1
MADISON COUNTY
JOB NO. D-98-001-18

200' 0 200' 400'
SCALE: 1" = 200'

SHEET 6 OF 8

ILLINOIS DEPARTMENT OF TRANSPORTATION
OFFICE OF HIGHWAYS PROJECT IMPLEMENTATION/REGION 5/DISTRICT 8
1102 EASTPORT PLAZA DRIVE
COLLINSVILLE, ILLINOIS 62234-6198

F.A.I. RTE.	SECTION	COUNTY	TOTAL SHEETS	SHEET NO.
270	60B-1	MADISON	860	40
		CONTRACT NO.		
FED. ROAD DIST. NO.	ILLINOIS	FED. AID PROJECT		

COMPLETION DATE OF FIELD WORK PERFORMED	
LAND SURVEY: 10/10/17	ROW STAKING:

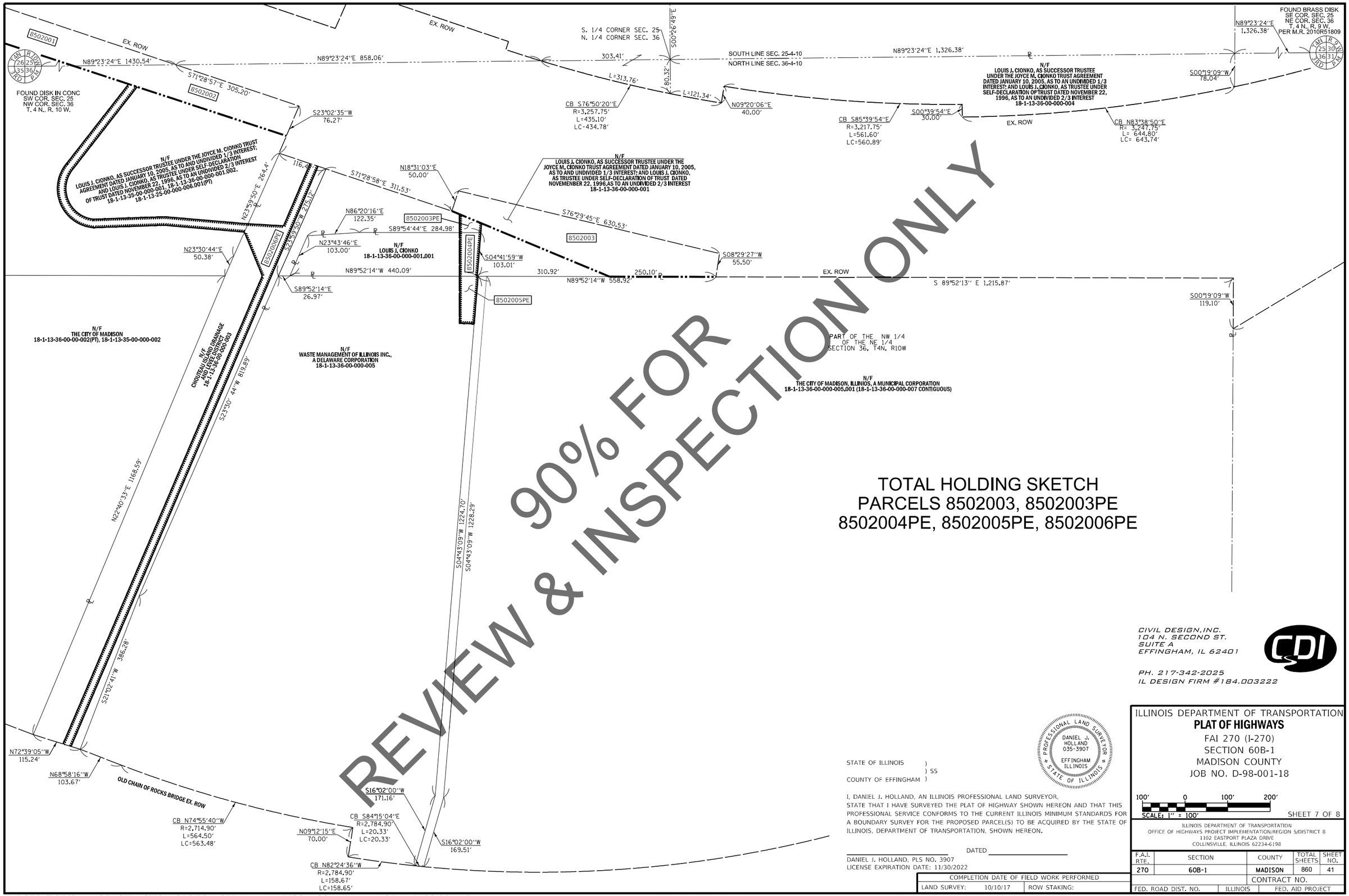

TOTAL HOLDING SKETCH
PARCELS 8502003, 8502003PE
8502004PE, 8502005PE, 8502006PE

CIVIL DESIGN, INC.
104 N. SECOND ST.
SUITE A
EFFINGHAM, IL 62401

PH. 217-342-2025
IL DESIGN FIRM #184.003222

STATE OF ILLINOIS)
) SS
COUNTY OF EFFINGHAM)

I, DANIEL J. HOLLAND, AN ILLINOIS PROFESSIONAL LAND SURVEYOR, STATE THAT I HAVE SURVEYED THE PLAT OF HIGHWAY SHOWN HEREON AND THAT THIS PROFESSIONAL SERVICE CONFORMS TO THE CURRENT ILLINOIS MINIMUM STANDARDS FOR A BOUNDARY SURVEY FOR THE PROPOSED PARCEL(S) TO BE ACQUIRED BY THE STATE OF ILLINOIS, DEPARTMENT OF TRANSPORTATION, SHOWN HEREON.

PROFESSIONAL LAND SURVEYOR
DANIEL J. HOLLAND
035-3907
EFFINGHAM
ILLINOIS
STATE OF ILLINOIS

_____ DATED _____
DANIEL J. HOLLAND, PLS NO. 3907
LICENSE EXPIRATION DATE: 11/30/2022

COMPLETION DATE OF FIELD WORK PERFORMED	
LAND SURVEY: 10/10/17	ROW STAKING:

ILLINOIS DEPARTMENT OF TRANSPORTATION
PLAT OF HIGHWAYS
FAI 270 (I-270)
SECTION 60B-1
MADISON COUNTY
JOB NO. D-98-001-18

100' 0 100' 200'
SCALE: 1" = 100'
SHEET 7 OF 8

ILLINOIS DEPARTMENT OF TRANSPORTATION
OFFICE OF HIGHWAYS PROJECT IMPLEMENTATION/REGION 5/DISTRICT 8
1102 EASTPORT PLAZA DRIVE
COLLINSVILLE, ILLINOIS 62234-6198

F.A.I. RTE.	SECTION	COUNTY	TOTAL SHEETS	SHEET NO.
270	60B-1	MADISON	860	41

CONTRACT NO.

FED. ROAD DIST. NO.	ILLINOIS	FED. AID PROJECT

SECTION CORNER AND CONTROL TIE SHEET

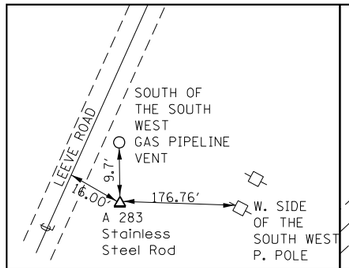

A 283

N=758,344.1501, E=302,889.5211

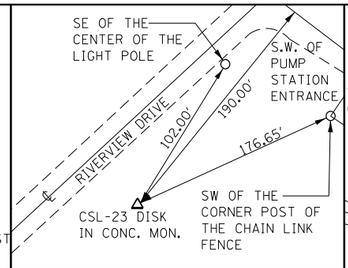

CSL 23

N=759,171.5827, E=289,416.9392

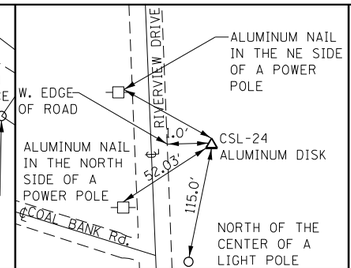

CSL 24

N=766,883.0568, E=292,418.6256

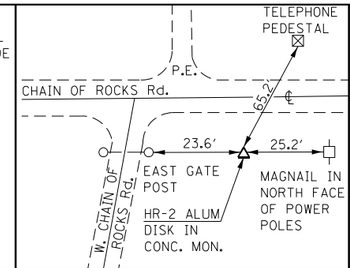

HR-2

N=760,962.7841, E=298,188.9532

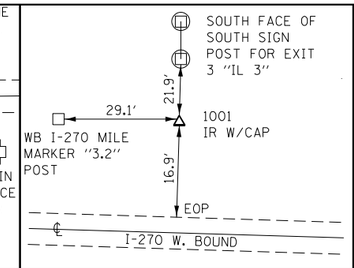

1001

N=764,356.6347, E=312,111.6856

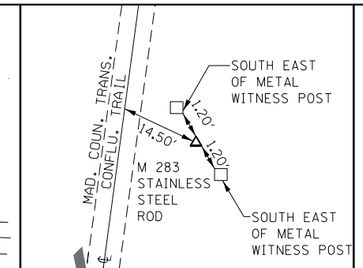

M 283

N=771,610.2217, E=309,359.3597

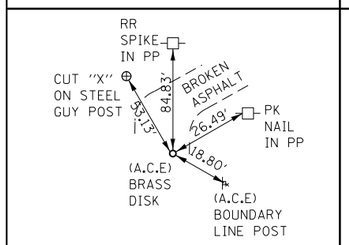

S.W. COR SEC. 30, T. 4 N., R. 9 W.

12/09/2010 MONUMENT RECORD DOC. NO. 2010R51809
N= 762,994.6990, E=301,437.0690

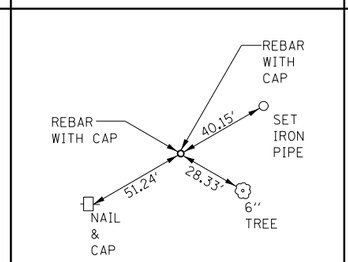

W. ¼ COR. SEC. 30 T. 4 N., R. 9 W.

12/09/2010 MONUMENT RECORD DOC. NO. 2010R51810
N=765,633.1060, E=301,454.1220

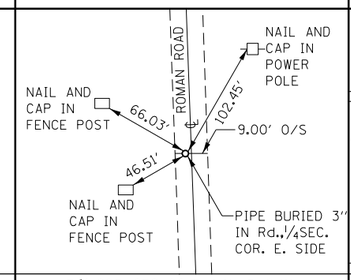

E.¼ COR. SEC. 36 T. 4 N., R. 9 W.

12/21/2010 MONUMENT RECORD BK. 3602 PAGE 2410
N=760,360.5610, E=301,410.1920

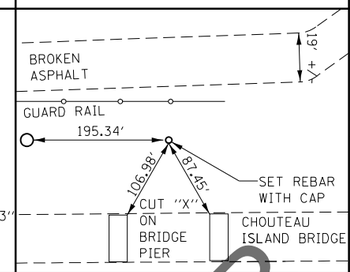

S.¼ COR. SEC. 30 T. 4 N., R. 9 W.

12/09/2010 MONUMENT RECORD DOC. NO. 2010R51809
N=763,002.1930, E=304,077.0030

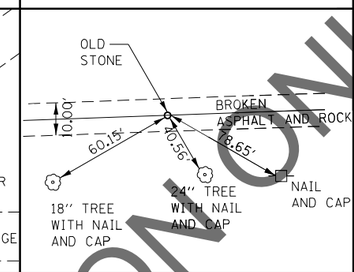

N¼ COR. SEC. 30 T. 4 N., R. 9 W.

12/09/2010 MONUMENT RECORD DOC. NO. 2010R51809
N=768,305.8850, E=304,115.1670

90% FOR REVIEW & INSPECTION ONLY

N

SPACE RESERVED FOR RECORDING OFFICER

STATE OF ILLINOIS)
) SS
COUNTY OF EFFINGHAM)

I, DANIEL J. HOLLAND, AN ILLINOIS PROFESSIONAL LAND SURVEYOR, STATE THAT I HAVE SURVEYED THE PLAT OF HIGHWAY SHOWN HEREON AND THAT THIS PROFESSIONAL SERVICE CONFORMS TO THE CURRENT ILLINOIS MINIMUM STANDARDS FOR A BOUNDARY SURVEY FOR THE PROPOSED PARCEL(S) TO BE ACQUIRED BY THE STATE OF ILLINOIS, DEPARTMENT OF TRANSPORTATION, SHOWN HEREON.

DATED _____

DANIEL J. HOLLAND, PLS NO. 3907
LICENSE EXPIRATION DATE: 11/30/2022

PROFESSIONAL LAND SURVEYOR
DANIEL J. HOLLAND
035-3907
EFFINGHAM
ILLINOIS
STATE OF ILLINOIS

CIVIL DESIGN, INC.
104 N. SECOND ST.
SUITE A
EFFINGHAM, IL 62401

PH. 217-342-2025
IL DESIGN FIRM #184.003222

COMPLETION DATE OF FIELD WORK PERFORMED	
LAND SURVEY: 10/10/17	ROW STAKING:

ILLINOIS DEPARTMENT OF TRANSPORTATION
PLAT OF HIGHWAYS
FAI 270 (I-270)
SECTION 60B-1
MADISON COUNTY
JOB NO. D-98-001-18

STATION 1815+43.51 EB BL TO
STATION 1905+17.58 EB BL

SHEET 8 OF 8

ILLINOIS DEPARTMENT OF TRANSPORTATION
OFFICE OF HIGHWAYS PROJECT IMPLEMENTATION/REGION 5/DISTRICT 8
1102 EASTPORT PLAZA DRIVE
COLLINSVILLE, ILLINOIS 62234-6198

F.A.S. RTE.	SECTION	COUNTY	TOTAL SHEETS	SHEET NO.
270	60B-1	MADISON	860	42
		CONTRACT NO.		
FED. ROAD DIST. NO.	ILLINOIS	FED. AID PROJECT		

PLAN — SURVEYED / PLOTTED / ALIGNMENT CHECKED / RT. OF WAY CHECKED / CADD FILE NAME — NOTE BOOK NO. — BY — DATE

PROFILE — SURVEYED / PLOTTED / GRADES CHECKED / B.M. NOTED / STRUCTURE NOTATNS CHKD — NOTE BOOK NO. — BY — DATE

MODEL: Default
FILE NAME: C:\ICS4PDP\100101\45086_116\0876190-sht-plmprf-001.dgn

HORNER & SHIFRIN — Teaming with: PARSONS

USER NAME = PWICS$	DESIGNED -	REVISED -	
	DRAWN -	REVISED -	
PLOT SCALE = 50.0000 ' / in.	CHECKED -	REVISED -	
PLOT DATE = 11/19/2021	DATE -	REVISED -	

STATE OF ILLINOIS
DEPARTMENT OF TRANSPORTATION

FAI–270
PLAN AND PROFILE

SCALE: 1" = 50' | SHEET 1 OF 9 SHEETS | STA. 1779+00.00 TO STA. 1794+00.00

F.A.I. RTE.	SECTION	COUNTY	TOTAL SHEETS	SHEET NO.
270	60(B)-1	MADISON	860	43
		CONTRACT NO. 76J90		
		ILLINOIS	FED. AID PROJECT	

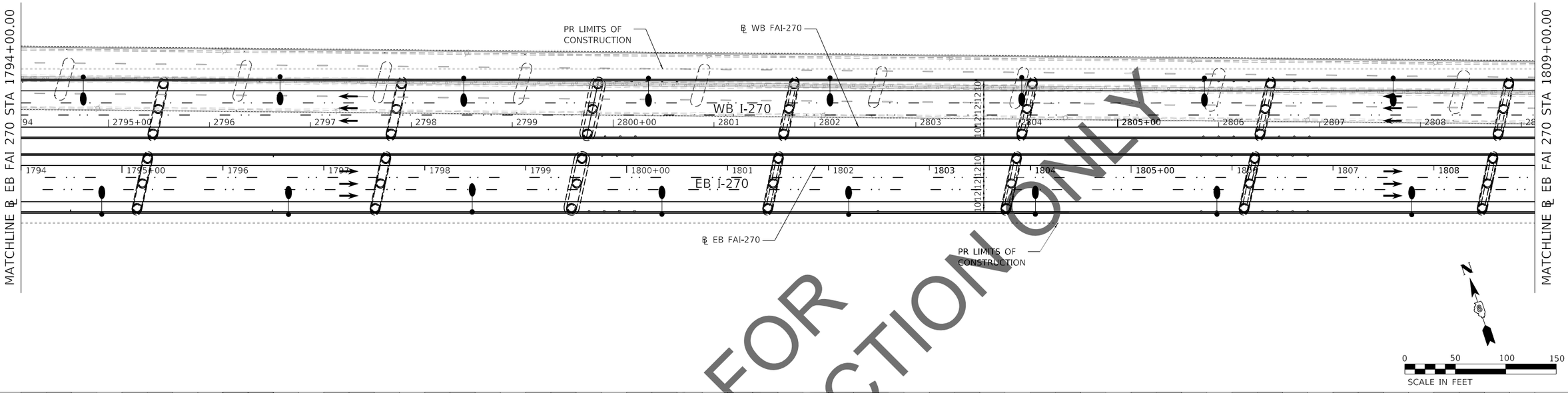

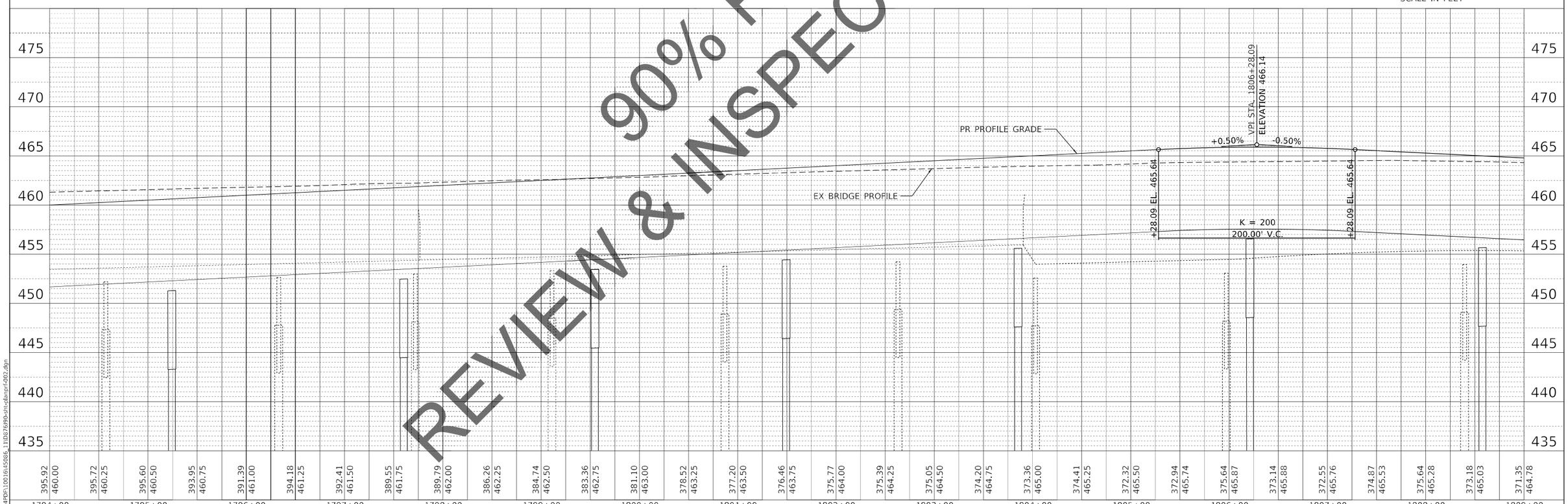

90% FOR REVIEW & INSPECTION ONLY

PLAN	BY	DATE
SURVEYED		
PLOTTED		
ALIGNMENT CHECKED		
RT. OF WAY CHECKED		
CADD FILE NAME		
NOTE BOOK NO.		

PROFILE	BY	DATE
SURVEYED		
PLOTTED		
GRADES CHECKED		
B.M. NOTED		
STRUCTURE NOTATNS CHKD		
NOTE BOOK NO.		

MODEL: Default
FILE NAME: C:\ICS4PDF\10016\45086_11\D76J90-sht-planprf-002.dgn

HORNER & SHIFRIN
Teaming with: PARSONS

USER NAME = PWICS$	DESIGNED -	REVISED -
	DRAWN -	REVISED -
PLOT SCALE = 50.0000 ' / in.	CHECKED -	REVISED -
PLOT DATE = 11/19/2021	DATE -	REVISED -

STATE OF ILLINOIS
DEPARTMENT OF TRANSPORTATION

FAI-270
PLAN AND PROFILE

SCALE: 1" = 50' | SHEET 2 OF 9 SHEETS | STA. 1794+00.00 TO STA. 1809+00.00

F.A.I. RTE.	SECTION	COUNTY	TOTAL SHEETS	SHEET NO.
270	60(B)-1	MADISON	860	44
		CONTRACT NO. 76J90		
		ILLINOIS	FED. AID PROJECT	

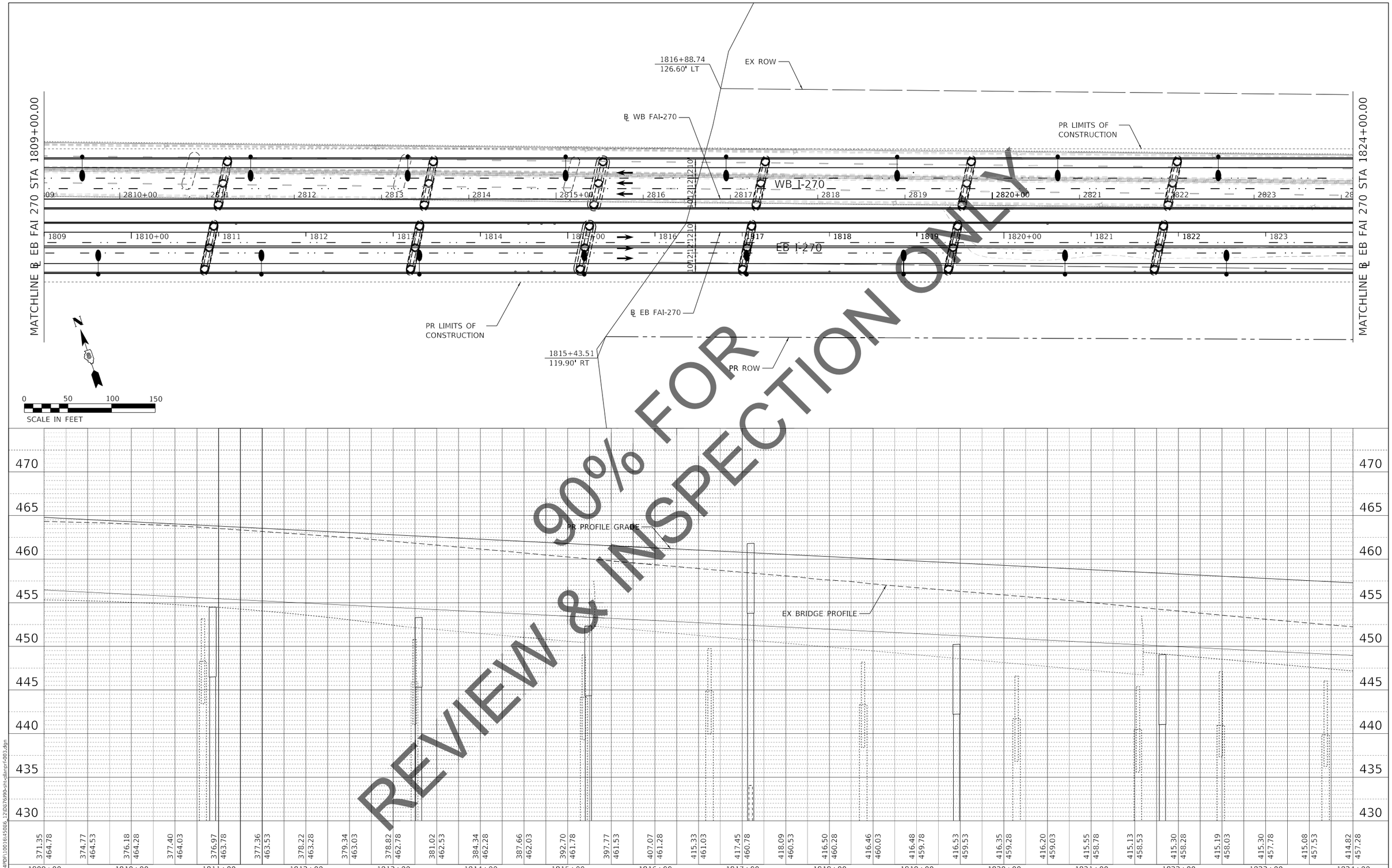

90% FOR REVIEW & INSPECTION ONLY

PLAN
NOTE BOOK NO.
SURVEYED
PLOTTED
ALIGNMENT CHECKED
RT. OF WAY CHECKED
CADD FILE NAME
BY
DATE

PROFILE
NOTE BOOK NO.
SURVEYED
PLOTTED
GRADES CHECKED
B.M. NOTED
STRUCTURE NOTAT'NS CH'KD
BY
DATE

MODEL: Default
FILE NAME: C:\ICS4PDF\10016\45086_12\D76J90-sht-planprf-003.dgn

HORNER & SHIFRIN
Teaming with: PARSONS

USER NAME = PWICS$	DESIGNED -	REVISED -
	DRAWN -	REVISED -
PLOT SCALE = 50.0000 ' / in.	CHECKED -	REVISED -
PLOT DATE = 11/19/2021	DATE -	REVISED -

STATE OF ILLINOIS
DEPARTMENT OF TRANSPORTATION

FAI–270
PLAN AND PROFILE

SCALE: 1" = 50' | SHEET 3 OF 9 SHEETS | STA. 1809+00.00 TO STA. 1824+00.00

F.A.I. RTE.	SECTION	COUNTY	TOTAL SHEETS	SHEET NO.
270	60(B)-1	MADISON	860	45

CONTRACT NO. 76J90

ILLINOIS | FED. AID PROJECT

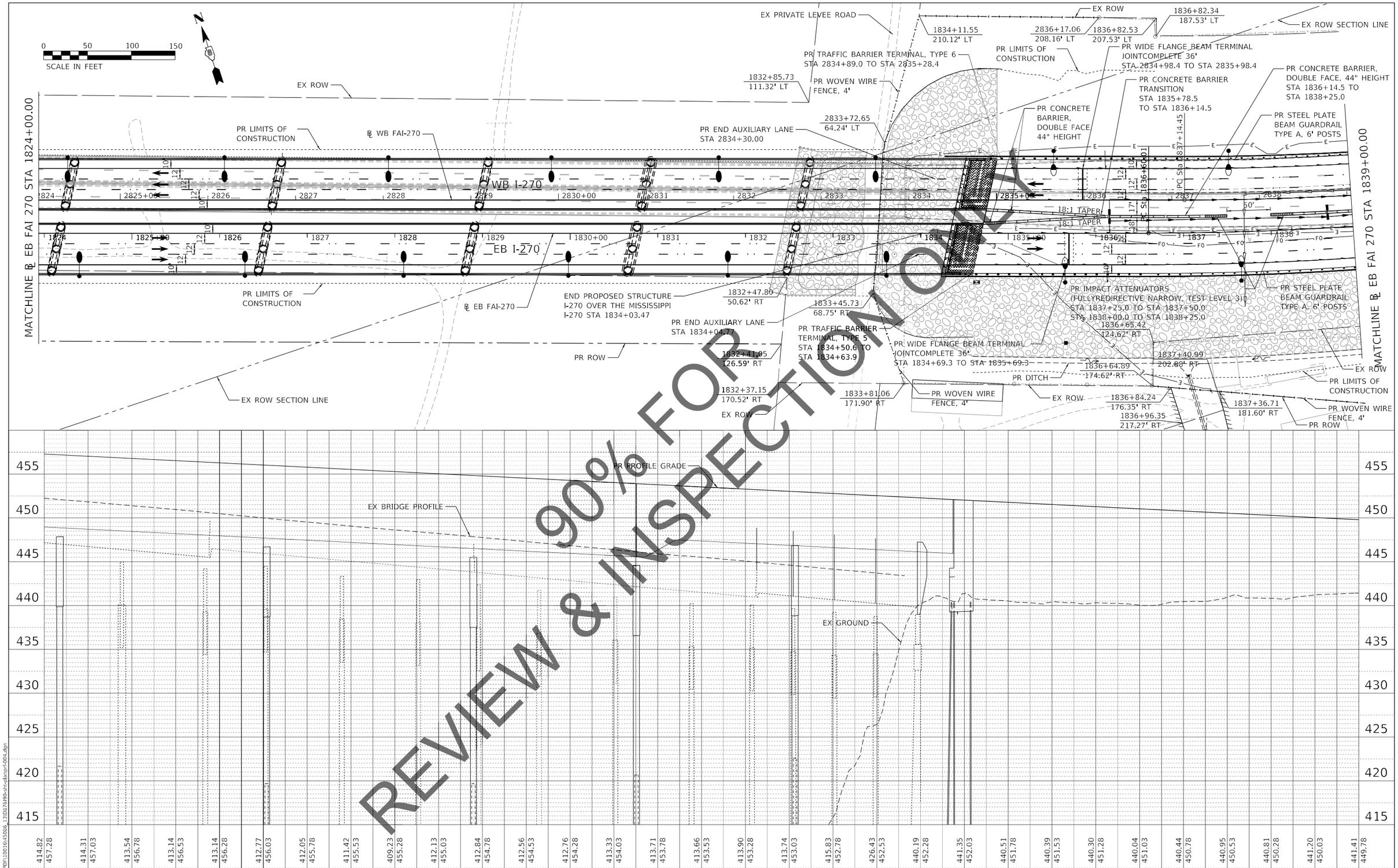

REVIEW & INSPECTION ONLY FOR 90%

PLAN
SURVEYED
PLOTTED
ALIGNMENT CHECKED
RT. OF WAY CHECKED
CADD FILE NAME
NOTE BOOK
NO.
BY
DATE

PROFILE
SURVEYED
PLOTTED
GRADES CHECKED
B.M. NOTED
STRUCTURE NOTATNS CHKD
NOTE BOOK
NO.
BY
DATE

MODEL: Default
FILE NAME: C:\ICS4PDF\10016\45086_131D876\90-sht-planprf-004.dgn

HORNER & SHIFRIN
Teaming with: PARSONS

USER NAME = PWICS$	DESIGNED -	REVISED -
	DRAWN -	REVISED -
PLOT SCALE = 50.0000 ' / in.	CHECKED -	REVISED -
PLOT DATE = 11/19/2021	DATE -	REVISED -

STATE OF ILLINOIS
DEPARTMENT OF TRANSPORTATION

FAI-270
PLAN AND PROFILE

SCALE: 1" = 50' | SHEET 4 OF 9 SHEETS | STA. 1824+00.00 TO STA. 1839+00.00

F.A.I. RTE.	SECTION	COUNTY	TOTAL SHEETS	SHEET NO.
270	60(B)-1	MADISON	860	46

CONTRACT NO. 76J90

ILLINOIS | FED. AID PROJECT

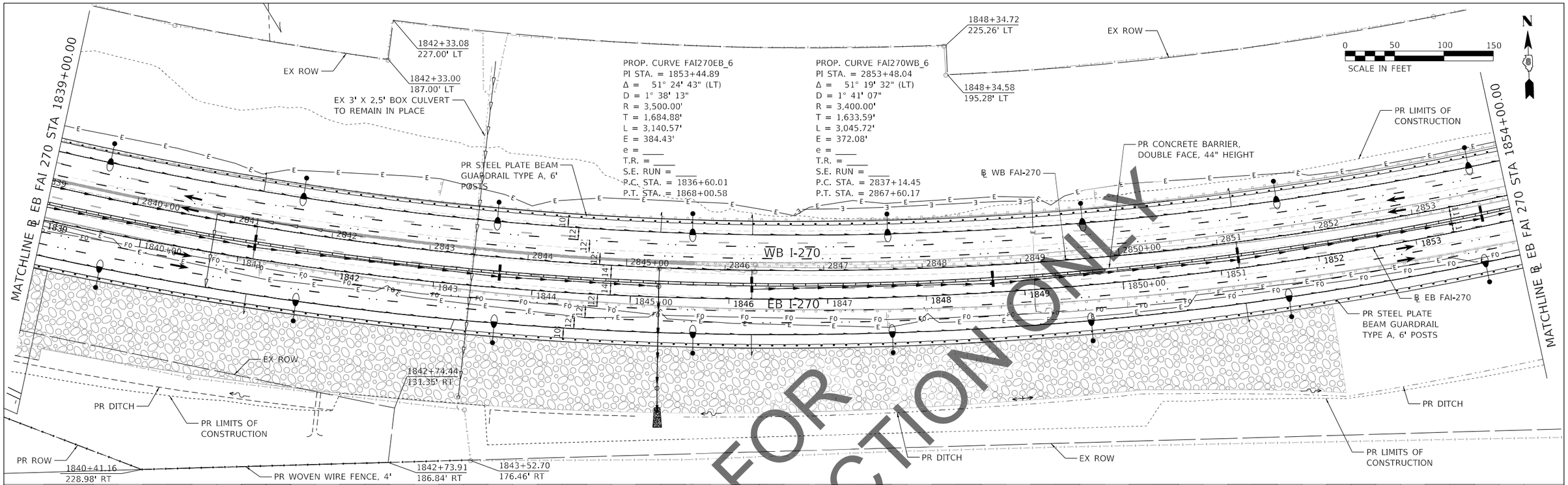

90% FOR REVIEW & INSPECTION ONLY

PLAN — SURVEYED / PLOTTED / ALIGNMENT CHECKED / RT. OF WAY CHECKED / CADD FILE NAME — NOTE BOOK NO. ____ — BY — DATE

PROFILE — SURVEYED / PLOTTED / GRADES CHECKED / B.M. NOTED / STRUCTURE NOTATNS CHKD — NOTE BOOK NO. ____ — BY — DATE

MODEL: Default
FILE NAME: C:\ICS4PDF\100161\5086_141D876\90-sht-planprf-005.dgn

HORNER & SHIFRIN
Teaming with: PARSONS

USER NAME = PWICS$	DESIGNED -	REVISED -
	DRAWN -	REVISED -
PLOT SCALE = 50.0000 ' / in.	CHECKED -	REVISED -
PLOT DATE = 11/19/2021	DATE -	REVISED -

STATE OF ILLINOIS
DEPARTMENT OF TRANSPORTATION

FAI–270
PLAN AND PROFILE

SCALE: 1" = 50' | SHEET 5 OF 9 SHEETS | STA. 1839+00.00 TO STA. 1854+00.00

F.A.I. RTE.	SECTION	COUNTY	TOTAL SHEETS	SHEET NO.
270	60(B)-1	MADISON	860	47

CONTRACT NO. 76J90

ILLINOIS | FED. AID PROJECT

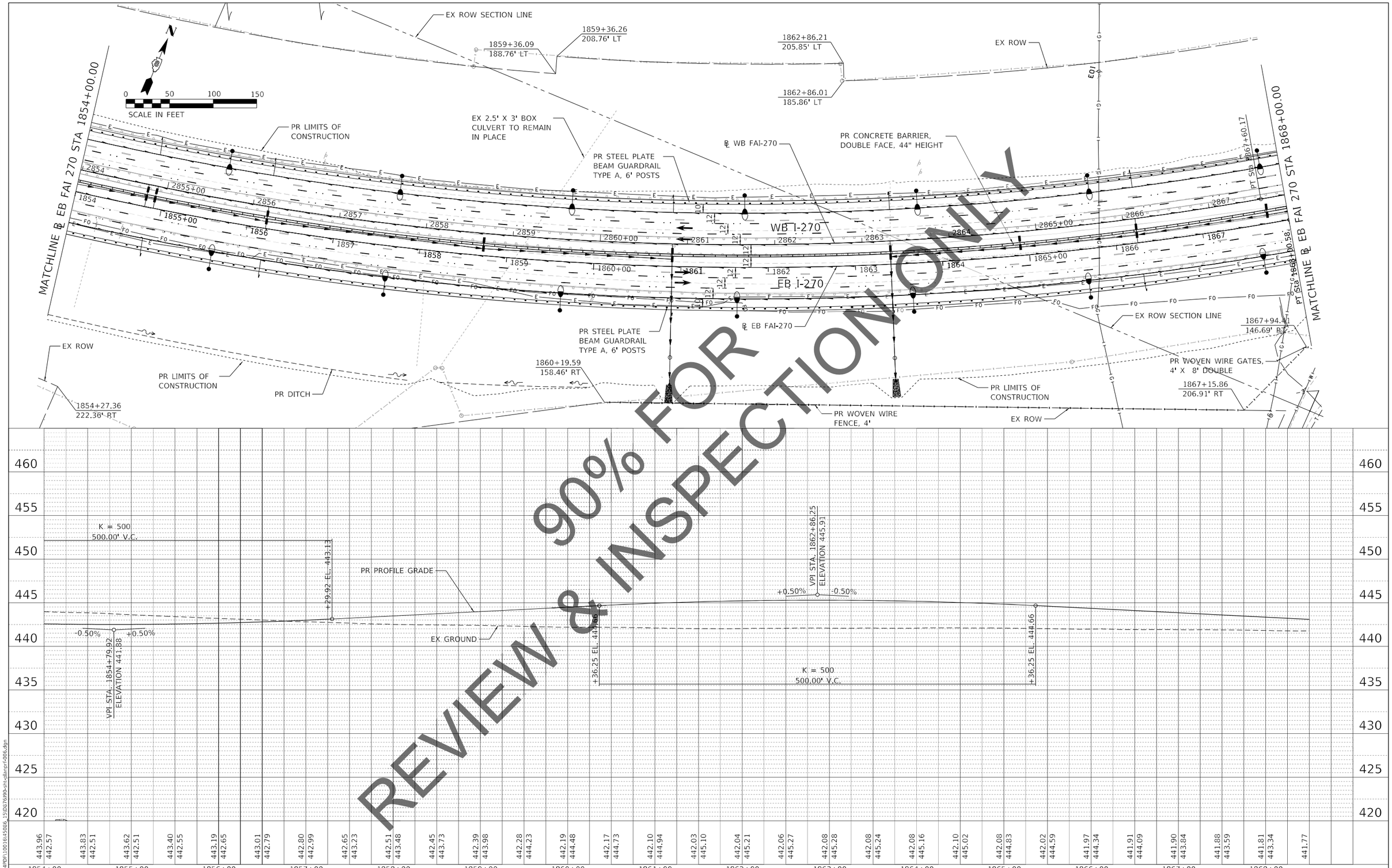

REVIEW & INSPECTION ONLY
90% FOR

PLAN		BY	DATE
SURVEYED			
PLOTTED			
ALIGNMENT CHECKED			
RT. OF WAY CHECKED			
CADD FILE NAME			
NOTE BOOK NO.			

PROFILE		BY	DATE
SURVEYED			
PLOTTED			
GRADES CHECKED			
B.M. NOTED			
STRUCTURE NOTATNS CHKD			
NOTE BOOK NO.			

MODEL: Default
FILE NAME: C:\ICS4PPD\10016\45086_15\D876J90-sht-planprf-006.dgn

HORNER & SHIFRIN
Teaming with: PARSONS

USER NAME = PWICS$	DESIGNED -	REVISED -	
	DRAWN -	REVISED -	
PLOT SCALE = 50.0000 ' / in.	CHECKED -	REVISED -	
PLOT DATE = 11/19/2021	DATE -	REVISED -	

STATE OF ILLINOIS
DEPARTMENT OF TRANSPORTATION

FAI-270
PLAN AND PROFILE

SCALE: 1" = 50' | SHEET 6 OF 9 SHEETS | STA. 1854+00.00 TO STA. 1868+00.00

F.A.I. RTE.	SECTION	COUNTY	TOTAL SHEETS	SHEET NO.
270	60(B)-1	MADISON	860	48

CONTRACT NO. 76J90

ILLINOIS | FED. AID PROJECT

PROP. CURVE FAI270WB_9
PI STA. = 2879+63.64
Δ = 12° 44' 56" (RT)
D = 1° 14' 56"
R = 4,588.00'
T = 512.56'
L = 1,020.89'
E = 28.54'
e = ____
T.R. = ____
S.E. RUN = ____
P.C. STA. = 2874+51.08
P.T. STA. = 2884+71.97

MATCHLINE ℄ EB FAI 270 STA 1868+00.00

MATCHLINE ℄ EB FAI 270 STA 1883+00.00

EX ROW
1870+37.33
182.67' LT
EX ROW SECTION LINE
PR LIMITS OF CONSTRUCTION
PR STEEL PLATE BEAM GUARDRAIL TYPE A, 6' POSTS
PR LIMITS OF CONSTRUCTION
EX. CULVERT (SN-060-2013) TO REMAIN IN PLACE.
1868+07.20
137.42' RT
PR WOVEN WIRE GATES, 4' X 8' DOUBLE
1868+75.37
174.29' RT
1872+73.00
160.17' RT
1873+16.41
145.22' RT
1872+96.16
175.35' RT
PC Sta 2874+51.08
PC Sta 1873+03.97
℄ WB FAI-270
℄ EB FAI-270
PR LIMITS OF CONSTRUCTION
PR CONCRETE BARRIER, DOUBLE FACE, 44" HEIGHT
PI Sta 2879+63.64
WB I-270
EB I-270
+37.76
+50.20
1881+39.60
198.23' LT
EX ROW
1882+81.02
183.23' LT
2882+00.00
127.47' LT
PR WOVEN WIRE FENCE, 4'
PR STEEL PLATE BEAM GUARDRAIL TYPE A, 6' POSTS
PR LIMITS OF CONSTRUCTION
EX ROW
1878+40.31
152.26' RT
1879+94.11
212.05' RT
N
0 50 100 150
SCALE IN FEET

LEGEND
RE-USE EXISTING SHOULDER
RE-USE EXISTING PAVEMENT

K = 246
200.00' V.C.
+40.57 EL. 442.14
+40.57 EL. 441.95
PR PROFILE GRADE
EX GROUND
-0.50%
+0.31%
+0.31%
EX PROFILE GRADE
MATCH EX ELEVATION STA 871+41.58
VPI STA. 1871+40.57 ELEVATION 441.64
END OF PR PROFILE STA 871+41.58

460 455 450 445 440 435 430 425 420

441.81 443.34 | 441.77 443.09 | 441.95 442.84 | 441.87 442.59 | 441.75 442.34 | 441.67 442.09 | 441.73 441.91 | 441.84 441.84 | 441.93 441.86 | 442.01 441.98 | 442.17 442.14 | 442.33 442.30 | 442.47 442.46 | 442.63 442.61 | 442.78 442.77 | 442.94 442.93 | 443.09 443.09 | 443.25 443.24 | 443.42 443.40 | 443.58 443.56 | 443.76 443.72 | 443.92 443.87 | 444.06 444.03 | 444.23 444.19 | 444.39 444.35 | 444.56 444.50 | 444.69 444.66 | 444.87 444.82 | 445.01 444.97 | 445.16 445.13 | 445.29 445.29

1868+00 1869+00 1870+00 1871+00 1872+00 1873+00 1874+00 1875+00 1876+00 1877+00 1878+00 1879+00 1880+00 1881+00 1882+00 1883+00

PLAN: SURVEYED / PLOTTED / ALIGNMENT CHECKED / RT. OF WAY CHECKED / CADD FILE NAME / NOTE BOOK / NO. / BY / DATE

PROFILE: SURVEYED / PLOTTED / GRADES CHECKED / B.M. NOTED / STRUCTURE NOTATNS CHKD / NOTE BOOK / NO. / BY / DATE

90% REVIEW & INSPECTION ONLY FOR

MODEL: Default
FILE NAME: C:\ICS4PDF\100316\45086_16\D76J90-sht-planprf-007.dgn

HORNER & SHIFRIN
Teaming with: PARSONS

USER NAME = PWICS$	DESIGNED -	REVISED -
	DRAWN -	REVISED -
PLOT SCALE = 50.0000 ' / in.	CHECKED -	REVISED -
PLOT DATE = 11/19/2021	DATE -	REVISED -

STATE OF ILLINOIS
DEPARTMENT OF TRANSPORTATION

FAI-270
PLAN AND PROFILE

SCALE: 1" = 50' | SHEET 7 OF 9 SHEETS | STA. 1868+00.00 TO STA. 1883+00.00

F.A.I. RTE.	SECTION	COUNTY	TOTAL SHEETS	SHEET NO.
270	60(B)-1	MADISON	860	49

CONTRACT NO. 76J90

ILLINOIS FED. AID PROJECT

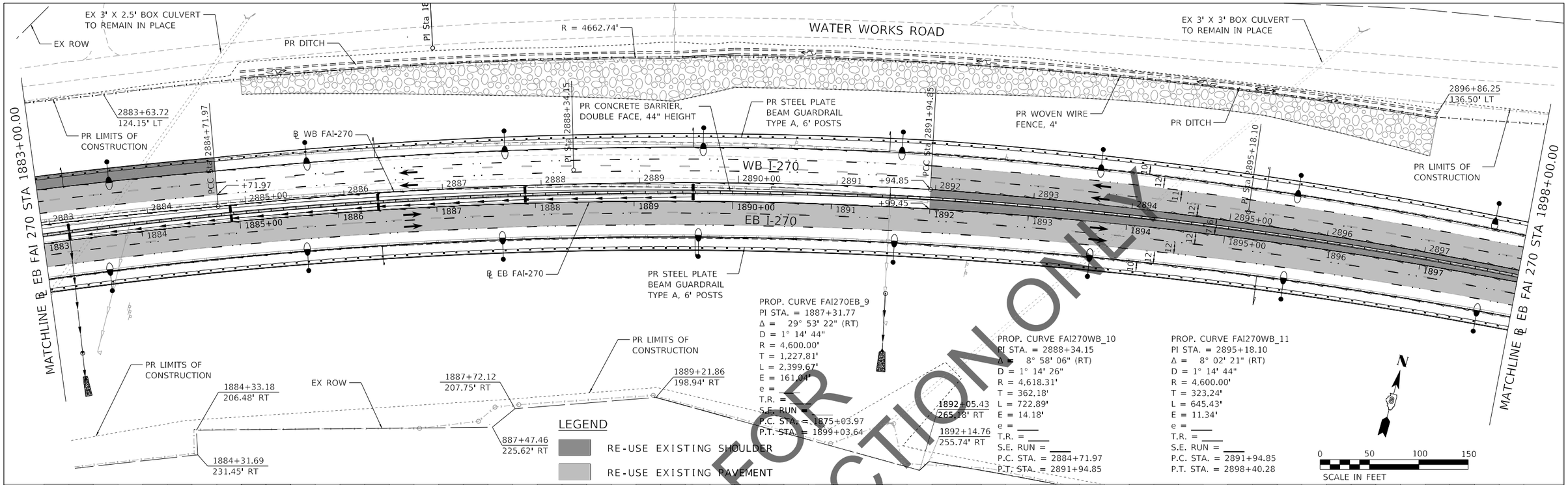

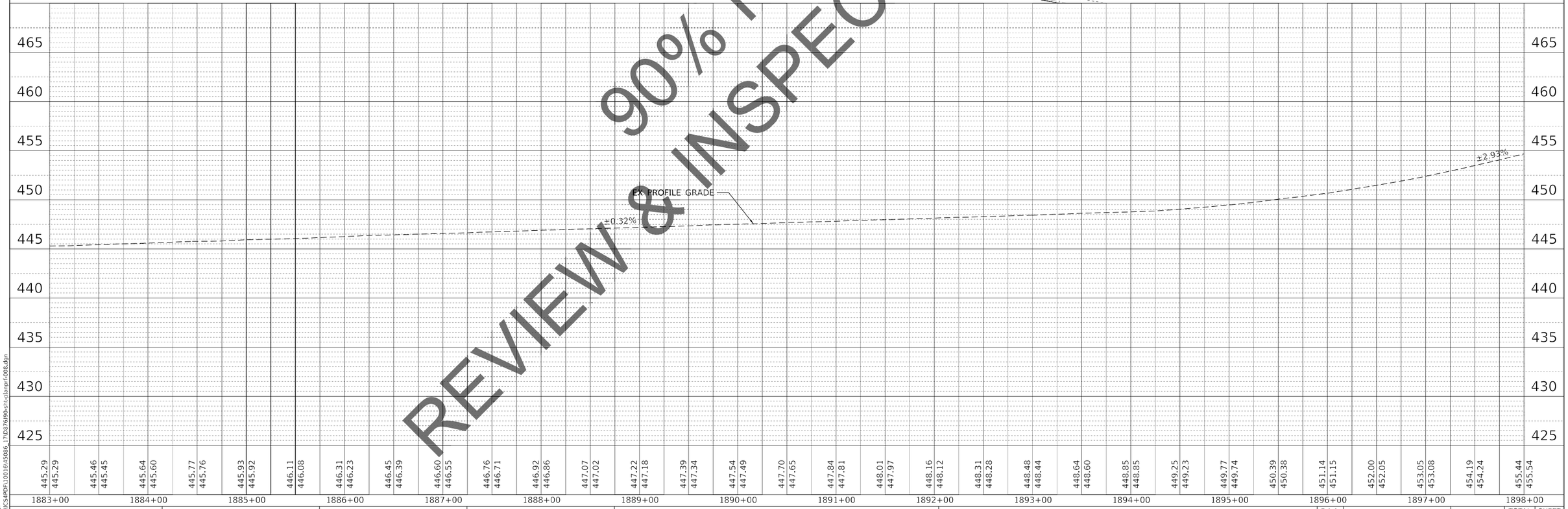

90% REVIEW & INSPECTION ONLY

PLAN
SURVEYED
PLOTTED
ALIGNMENT CHECKED
RT. OF WAY CHECKED
CADD FILE NAME
NOTE BOOK
NO.
BY
DATE

PROFILE
SURVEYED
PLOTTED
GRADES CHECKED
B.M. NOTED
STRUCTURE NOTATNS CHKD
NOTE BOOK
NO.
BY
DATE

MODEL: Default
FILE NAME: C:\ICS4PDF\100101\5086_171D76J90-sht-planprf-008.dgn

HORNER & SHIFRIN
Teaming with: PARSONS

USER NAME = PWICS$	DESIGNED -	REVISED -
	DRAWN -	REVISED -
PLOT SCALE = 50.0000 ' / in.	CHECKED -	REVISED -
PLOT DATE = 11/19/2021	DATE -	REVISED -

STATE OF ILLINOIS
DEPARTMENT OF TRANSPORTATION

FAI-270
PLAN AND PROFILE

SCALE: 1" = 50' | SHEET 8 OF 9 SHEETS | STA. 1883+00.00 TO STA. 1898+00.00

F.A.I. RTE.	SECTION	COUNTY	TOTAL SHEETS	SHEET NO.
270	60(B)-1	MADISON	860	50

CONTRACT NO. 76J90

ILLINOIS | FED. AID PROJECT

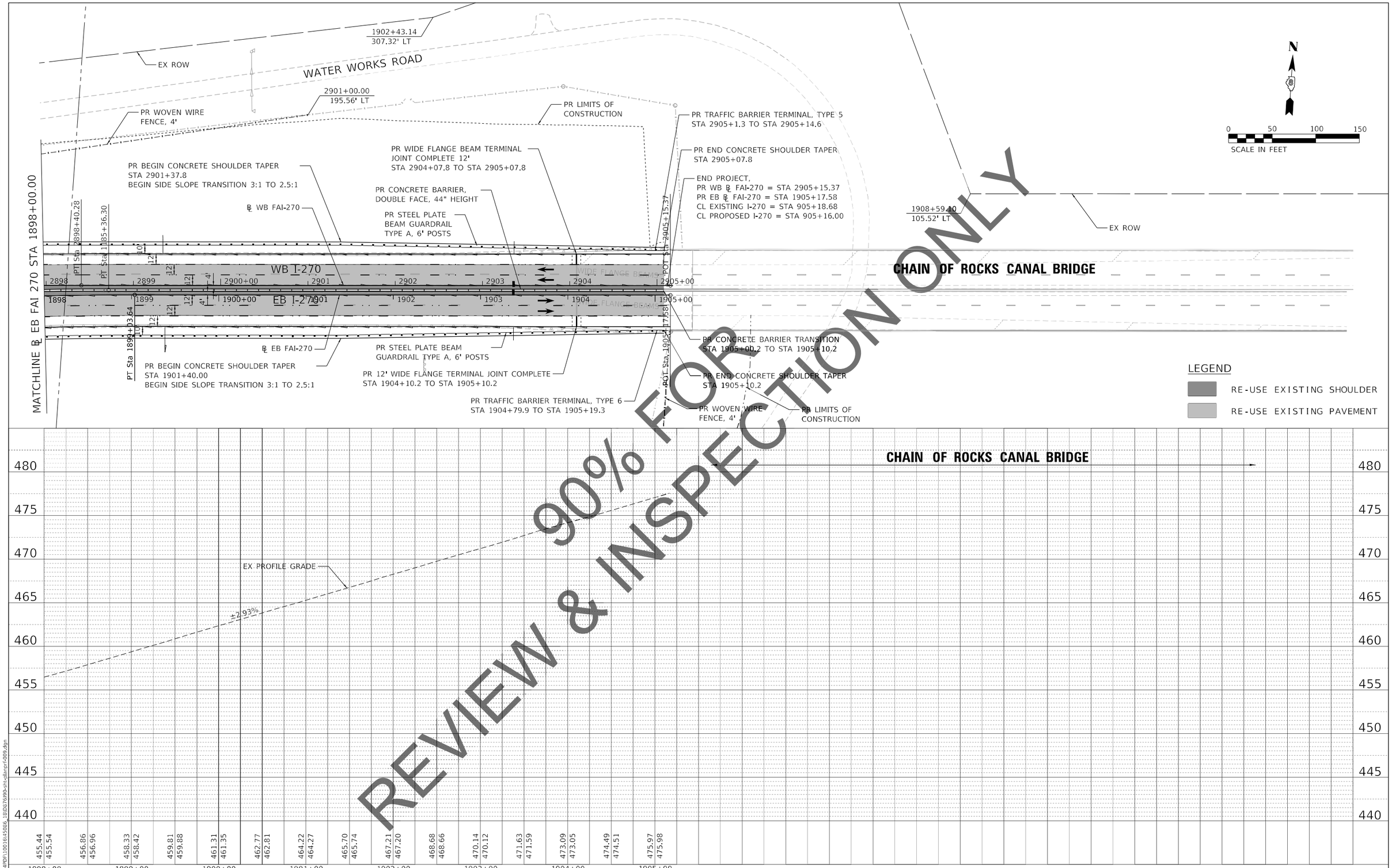

90% FOR REVIEW & INSPECTION ONLY

PLAN — SURVEYED / PLOTTED / ALIGNMENT CHECKED / RT. OF WAY CHECKED / CADD FILE NAME / NOTE BOOK NO. / BY / DATE

PROFILE — SURVEYED / PLOTTED / GRADES CHECKED / B.M. NOTED / STRUCTURE NOTATNS CHKD / NOTE BOOK NO. / BY / DATE

MODEL: Default
FILE NAME: C:\ICS4PDP\100161\5086_181D876\90-sht-planprf-009.dgn

HORNER & SHIFRIN
Teaming with: PARSONS

USER NAME = PWICS$	DESIGNED -	REVISED -
	DRAWN -	REVISED -
PLOT SCALE = 50.0000 ' / in.	CHECKED -	REVISED -
PLOT DATE = 11/19/2021	DATE -	REVISED -

STATE OF ILLINOIS
DEPARTMENT OF TRANSPORTATION

FAI–270
PLAN AND PROFILE

SCALE: 1" = 50' | SHEET 9 OF 9 SHEETS | STA. 1898+00.00 TO STA. 1905+17.52

F.A.I. RTE.	SECTION	COUNTY	TOTAL SHEETS	SHEET NO.
270	60(B)-1	MADISON	860	51

CONTRACT NO. 76J90

ILLINOIS | FED. AID PROJECT

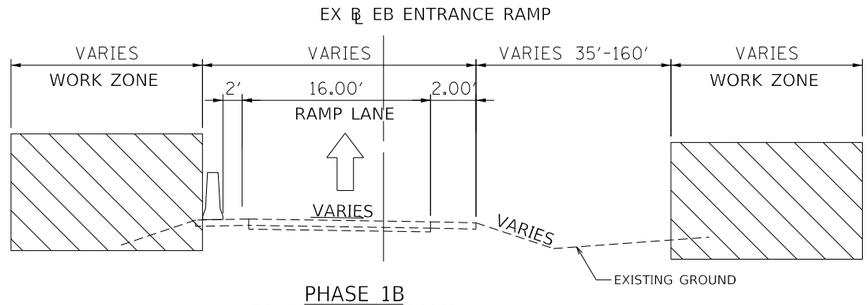

PHASE 1B
EB ENTRANCE RAMP

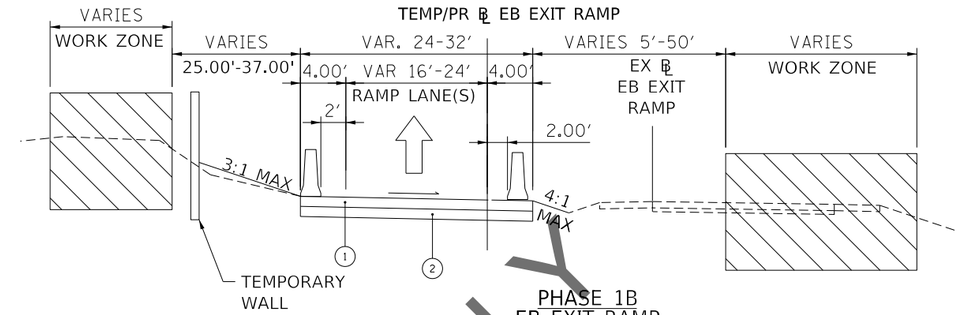

PHASE 1B
EB EXIT RAMP

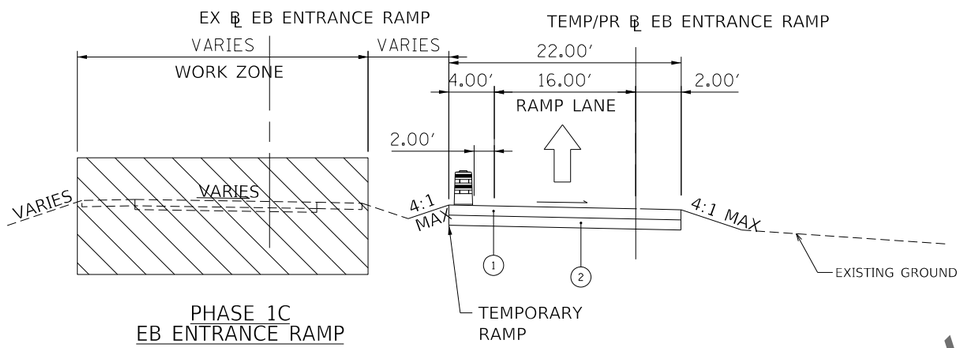

PHASE 1C
EB ENTRANCE RAMP

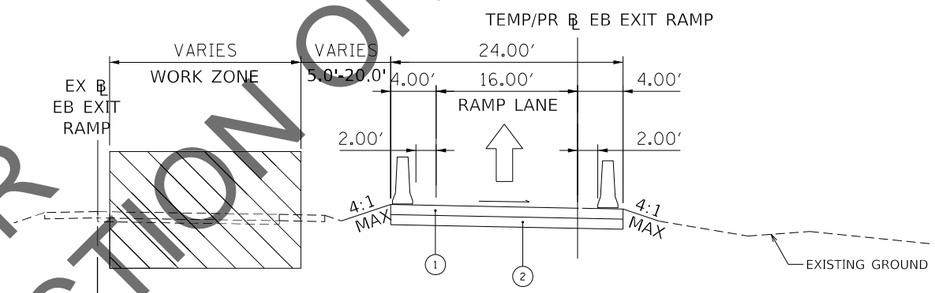

PHASE 1C
EB EXIT RAMP

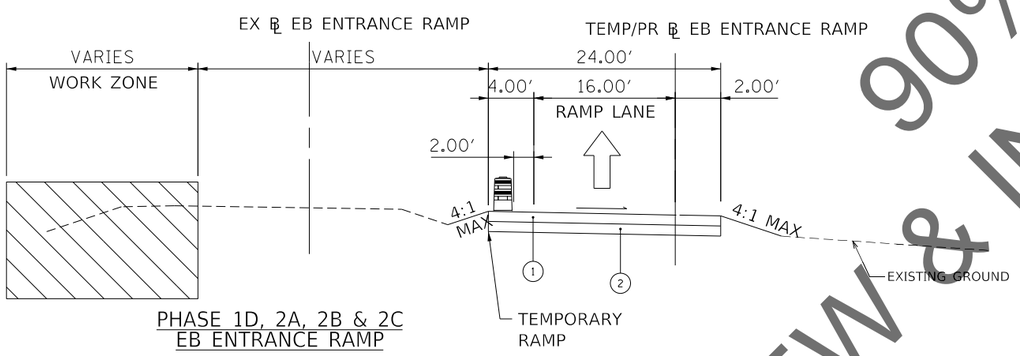

PHASE 1D, 2A, 2B & 2C
EB ENTRANCE RAMP

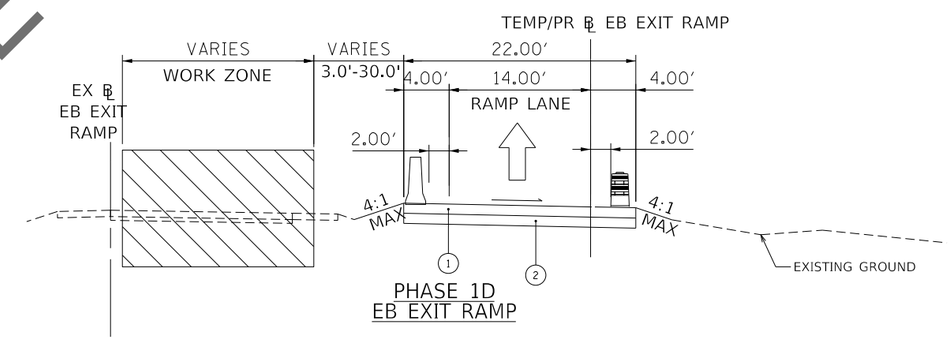

PHASE 1D
EB EXIT RAMP

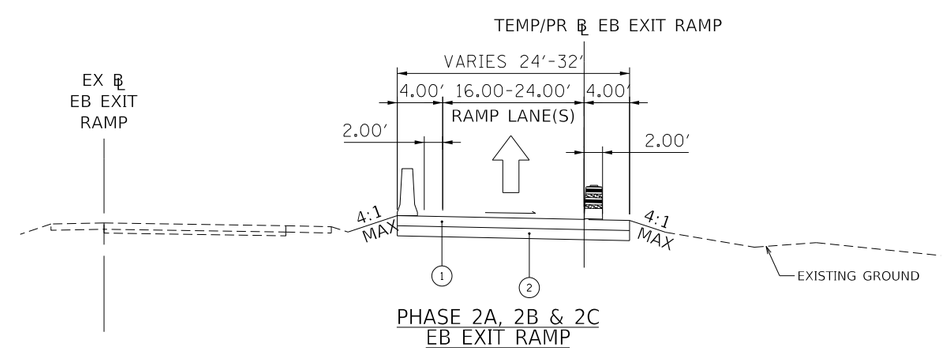

PHASE 2A, 2B & 2C
EB EXIT RAMP

TEMPORARY PAVEMENT SECTIONS:

1. PORTLAND CEMENT CONCRETE SHOULDERS 12"
2. SUBBASE GRANULAR MATERIAL, TYPE A 12"

90% FOR
REVIEW & INSPECTION ONLY

MODEL: Default
FILE NAME: C:\ICS4PDF\9939\45086_93\D076390-sht-mot-typical 03.dgn

HORNER & SHIFRIN
Teaming with: PARSONS

USER NAME = PWICS$	DESIGNED -	REVISED -	
	DRAWN -	REVISED -	
PLOT SCALE = 7.5000 ' / in.	CHECKED -	REVISED -	
PLOT DATE = 11/12/2021	DATE -	REVISED -	

STATE OF ILLINOIS
DEPARTMENT OF TRANSPORTATION

FAI 270 TRAFFIC CONTROL PLAN
TYPICAL SECTIONS – EB RAMPS

SCALE: | SHEET 3 OF 5 SHEETS | STA. TO STA.

F.A. RTE.	SECTION	COUNTY	TOTAL SHEETS	SHEET NO.
			860	52
CONTRACT NO.				
ILLINOIS	FED. AID PROJECT			

TEMPORARY PAVEMENT SECTIONS:

1. PORTLAND CEMENT CONCRETE SHOULDERS 12"
2. SUBBASE GRANULAR MATERIAL, TYPE A 12"

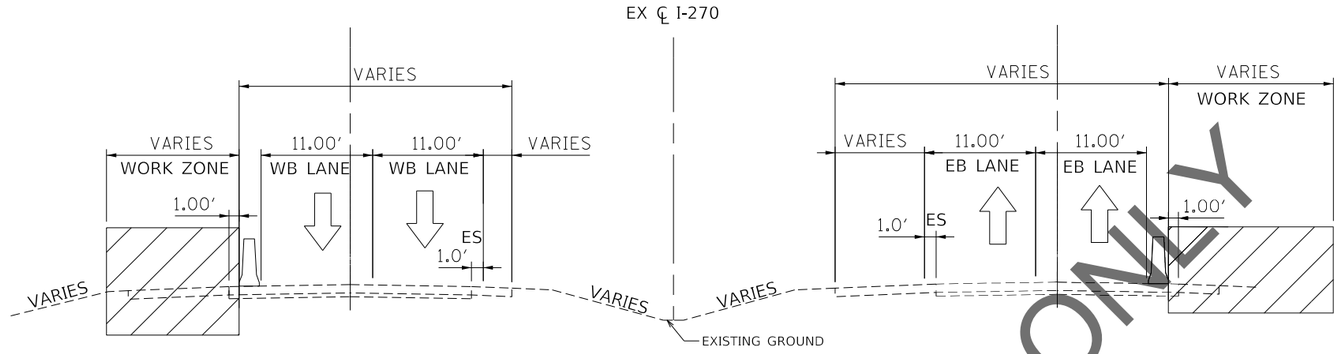

PRE-STAGE
I-270 MAINLINE

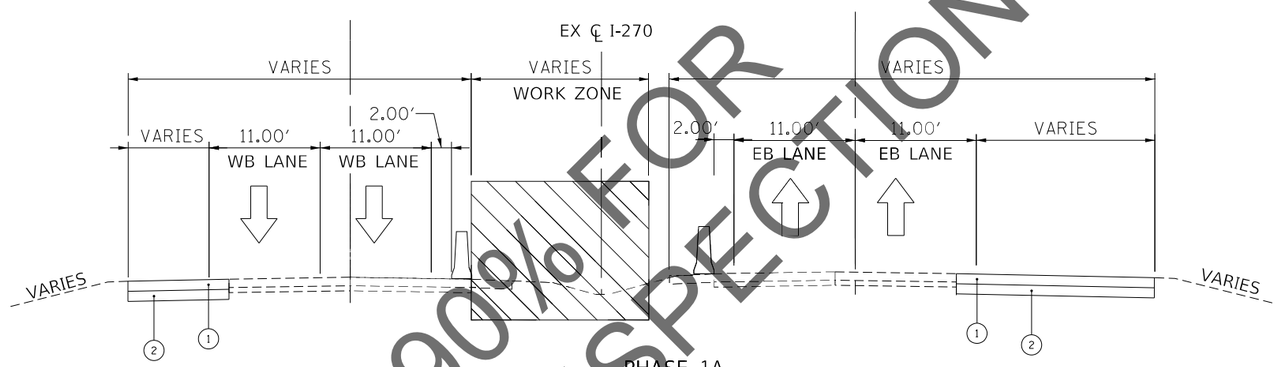

PHASE 1A
I-270 MAINLINE

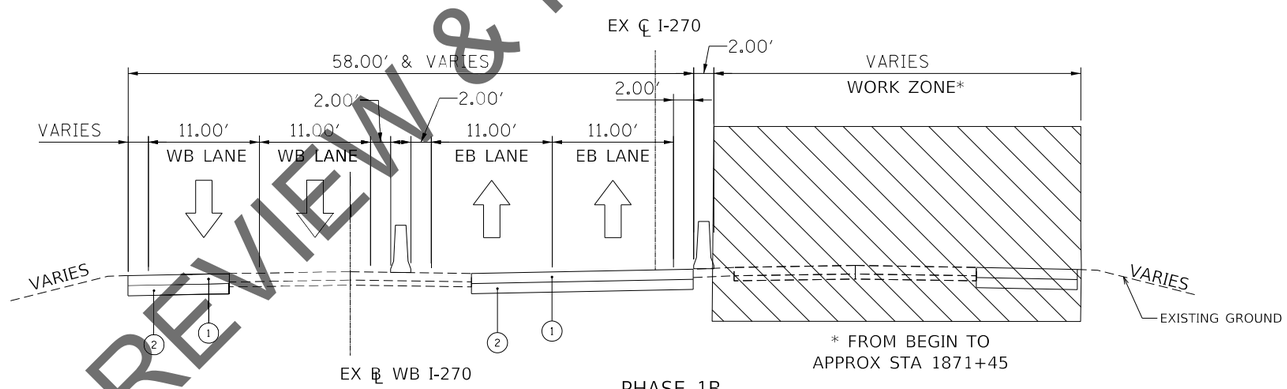

PHASE 1B
I-270 MAINLINE

90% FOR REVIEW & INSPECTION ONLY

MODEL: Default
FILE NAME: C:\CS4PDF\89539145086_170\D876190-sht-mot-typical 04.dgn

HORNER & SHIFRIN / Teaming with: PARSONS	USER NAME = PWICS$	DESIGNED -	REVISED -	STATE OF ILLINOIS DEPARTMENT OF TRANSPORTATION	FAI 270 TRAFFIC CONTROL PLAN TYPICAL SECTIONS – MAINLINE	F.A. RTE.	SECTION	COUNTY	TOTAL SHEETS / SHEET NO.
		DRAWN -	REVISED -						860 / 53
	PLOT SCALE = 7.5000 ' / in.	CHECKED -	REVISED -					CONTRACT NO.	
	PLOT DATE = 11/12/2021	DATE -	REVISED -		SCALE: / SHEET 4 OF 5 SHEETS / STA. TO STA.		ILLINOIS	FED. AID PROJECT	

TEMPORARY PAVEMENT SECTIONS:

(1) PORTLAND CEMENT CONCRETE SHOULDERS 12"

( ) SUBBASE GRANULAR MATERIAL, TYPE A 12"

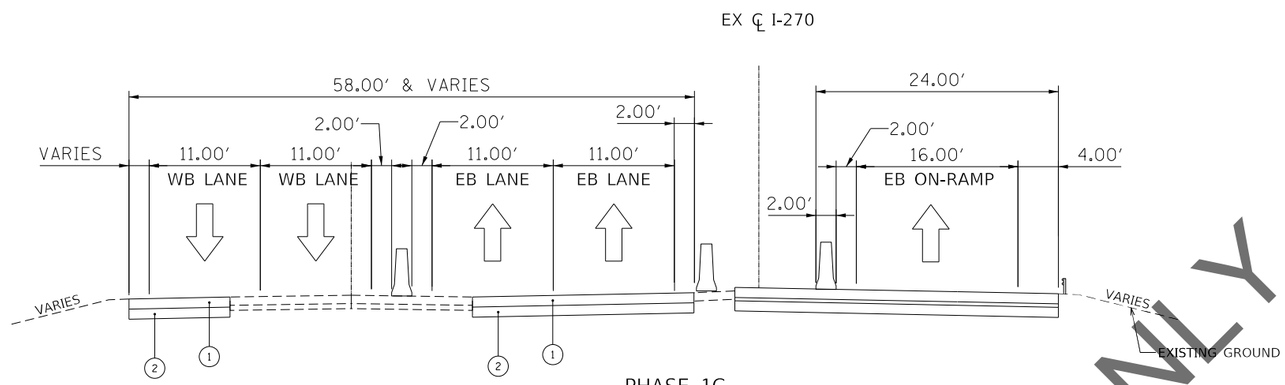

PHASE 1C
SOUTH OF APPROX STA 1874+00

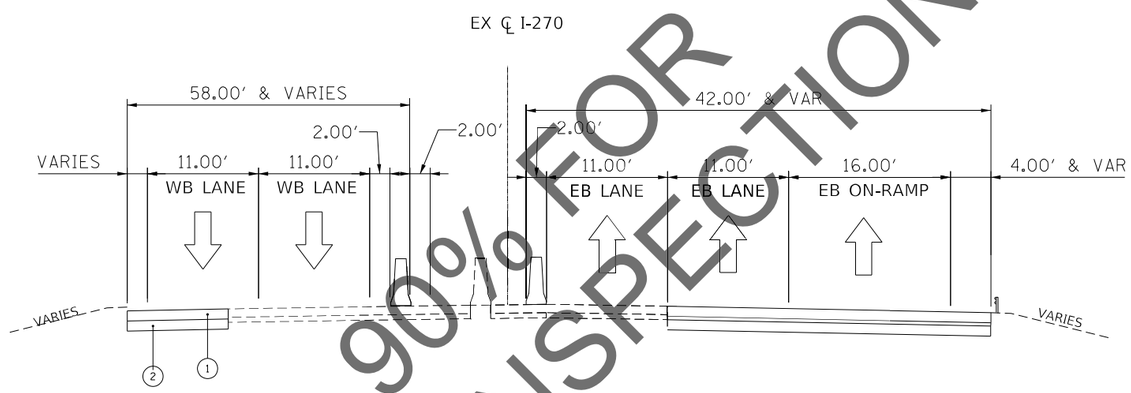

PHASE 1C
NORTH OF STA 1874+00

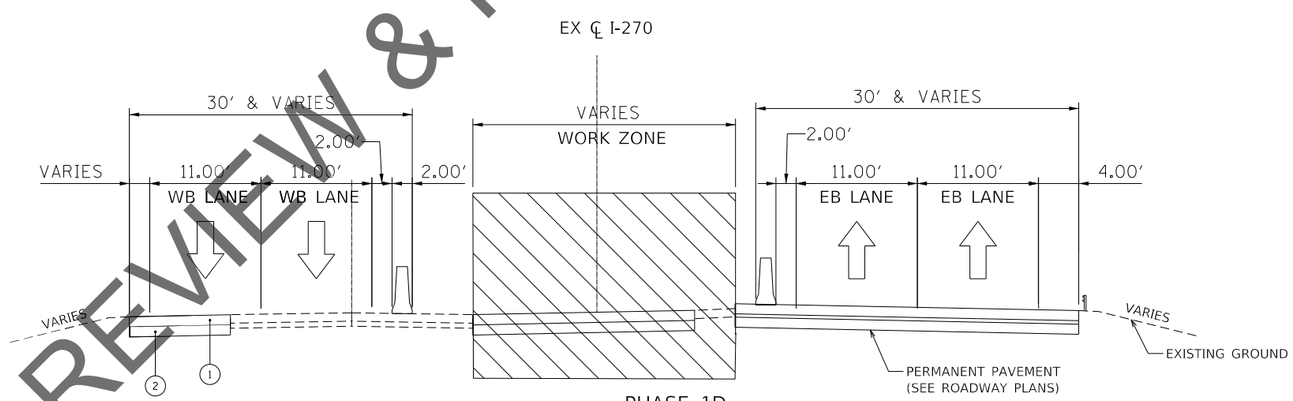

PHASE 1D
I-270 MAINLINE

REVIEW & INSPECTION ONLY
90% FOR

MODEL: Default
FILE NAME: C:\ICS4PDF\9939\45086_941D876\90-sht-smpl-typical 05.dgn

HORNER & SHIFRIN / PARSONS (Teaming with:)	USER NAME = PWICS$	DESIGNED -	REVISED -	STATE OF ILLINOIS DEPARTMENT OF TRANSPORTATION	FAI 270 TRAFFIC CONTROL PLAN TYPICAL SECTIONS – MAINLINE	F.A. RTE.	SECTION	COUNTY	TOTAL SHEETS / SHEET NO.
		DRAWN -	REVISED -						860 / 54
	PLOT SCALE = 7.5000 ' / in.	CHECKED -	REVISED -					CONTRACT NO.	
	PLOT DATE = 11/12/2021	DATE -	REVISED -		SCALE: / SHEET 4 OF 5 SHEETS / STA. / TO STA.			ILLINOIS	FED. AID PROJECT

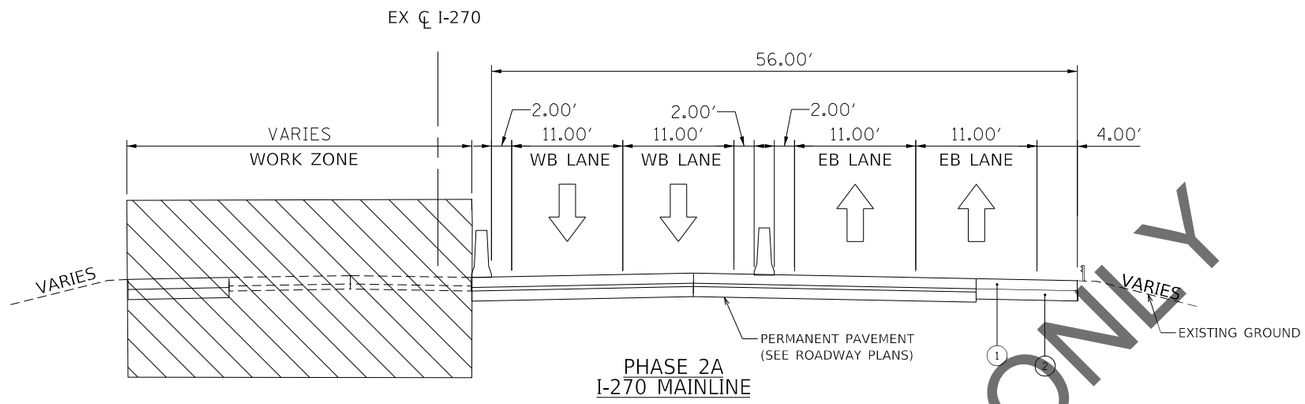

PHASE 2A
I-270 MAINLINE

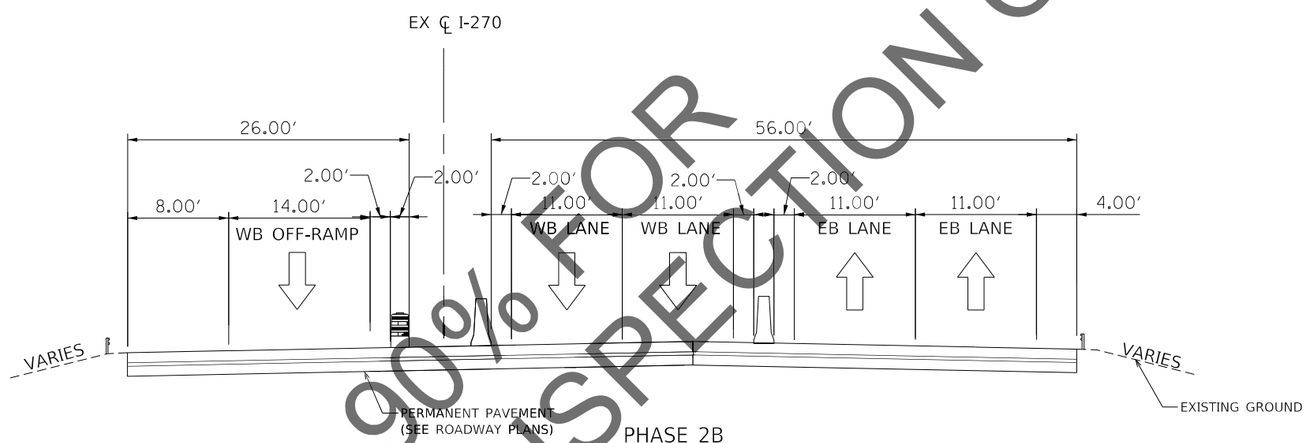

PHASE 2B
I-270 MAINLINE

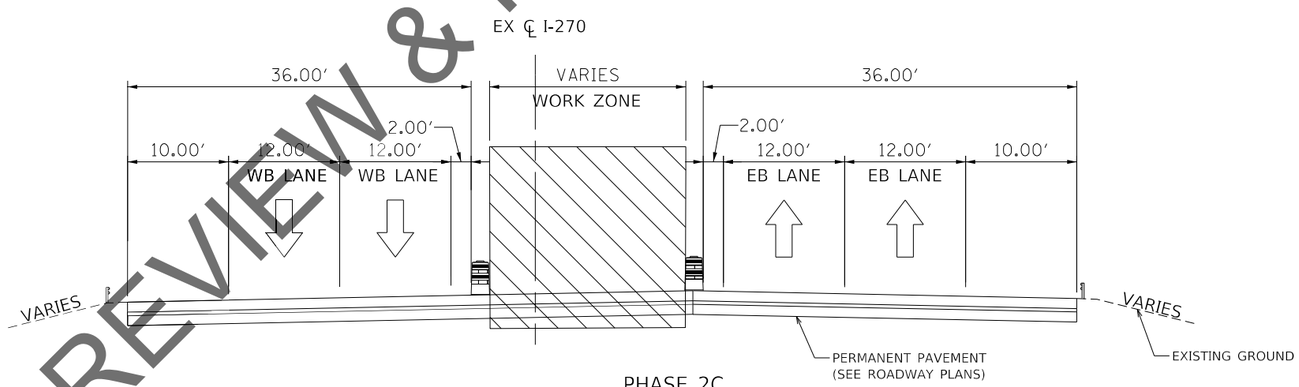

PHASE 2C
I-270 MAINLINE

90% REVIEW & INSPECTION ONLY

MODEL: Default
FILE NAME: C:\CS4PDF\99394508\6_1560D876\90-cht-not-typical_06.dgn

HORNER & SHIFRIN Teaming with: PARSONS	USER NAME = PWICS$	DESIGNED -	REVISED -	STATE OF ILLINOIS DEPARTMENT OF TRANSPORTATION	FAI 270 TRAFFIC CONTROL PLAN TYPICAL SECTIONS – MAINLINE		F.A. RTE.	SECTION	COUNTY	TOTAL SHEETS / SHEET NO.
		DRAWN -	REVISED -							860 / 55
	PLOT SCALE = 7.5000 ' / in.	CHECKED -	REVISED -						CONTRACT NO.	
	PLOT DATE = 11/12/2021	DATE -	REVISED -		SCALE:	SHEET 5 OF 5 SHEETS	STA.	TO STA.	ILLINOIS	FED. AID PROJECT

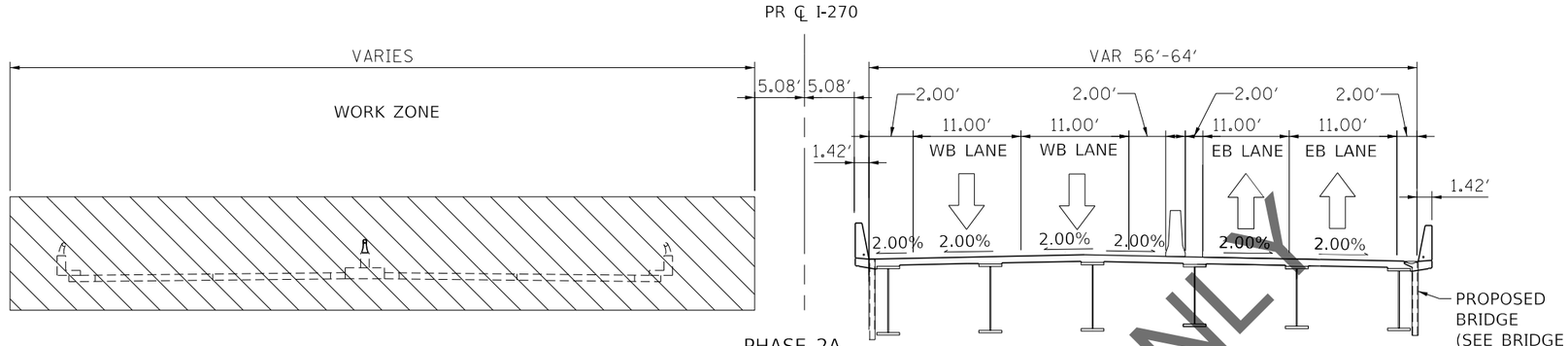

PHASE 2A
BRIDGE OVER MISSISSIPPI

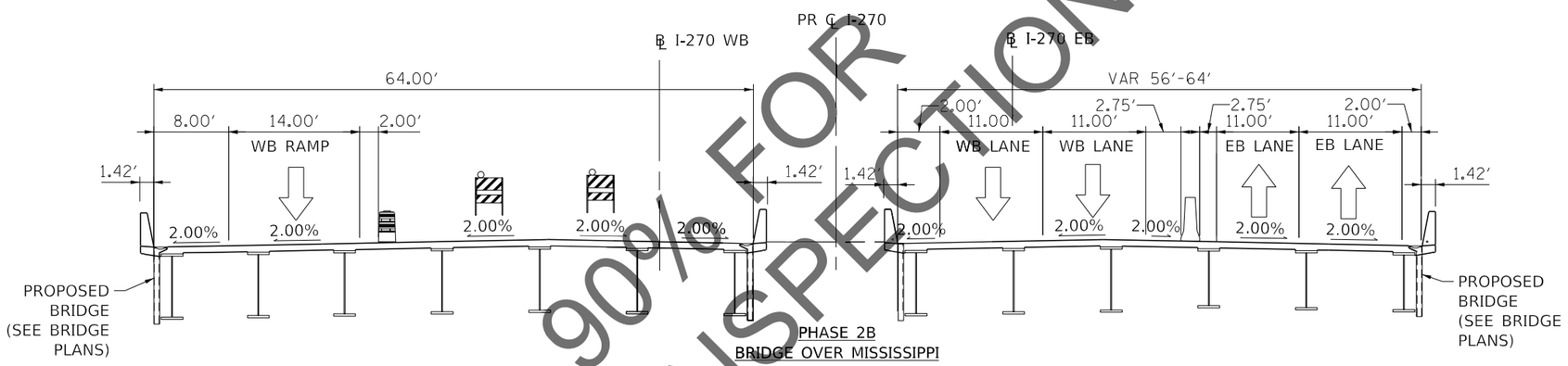

PHASE 2B
BRIDGE OVER MISSISSIPPI

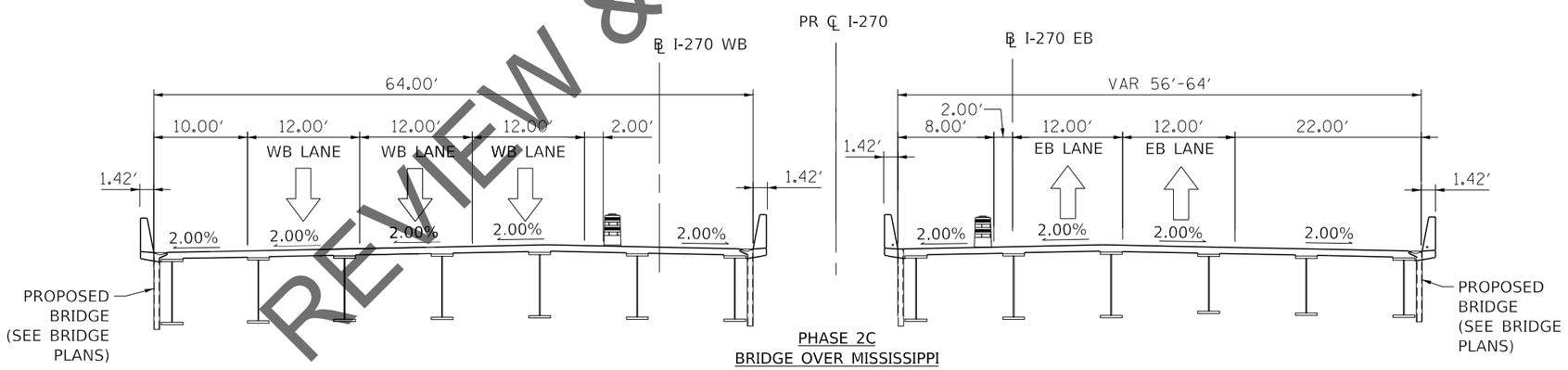

PHASE 2C
BRIDGE OVER MISSISSIPPI

REVIEW & INSPECTION ONLY
90% FOR

MODEL: Default
FILE NAME: C:\ICS4PDF\9939\45086_1721\D376190-sht-mot-typical_08.dgn

HORNER & SHIFRIN Teaming with: PARSONS	USER NAME = PWICS$	DESIGNED -	REVISED -	STATE OF ILLINOIS DEPARTMENT OF TRANSPORTATION	FAI 270 TRAFFIC CONTROL PLAN TYPICAL SECTIONS – BRIDGE	F.A. RTE.	SECTION	COUNTY	TOTAL SHEETS 860	SHEET NO. 56
		DRAWN -	REVISED -					CONTRACT NO.		
	PLOT SCALE = 7.5000 ' / in.	CHECKED -	REVISED -							
	PLOT DATE = 11/12/2021	DATE -	REVISED -		SCALE: SHEET 5 OF 5 SHEETS STA. TO STA.		ILLINOIS	FED. AID PROJECT		

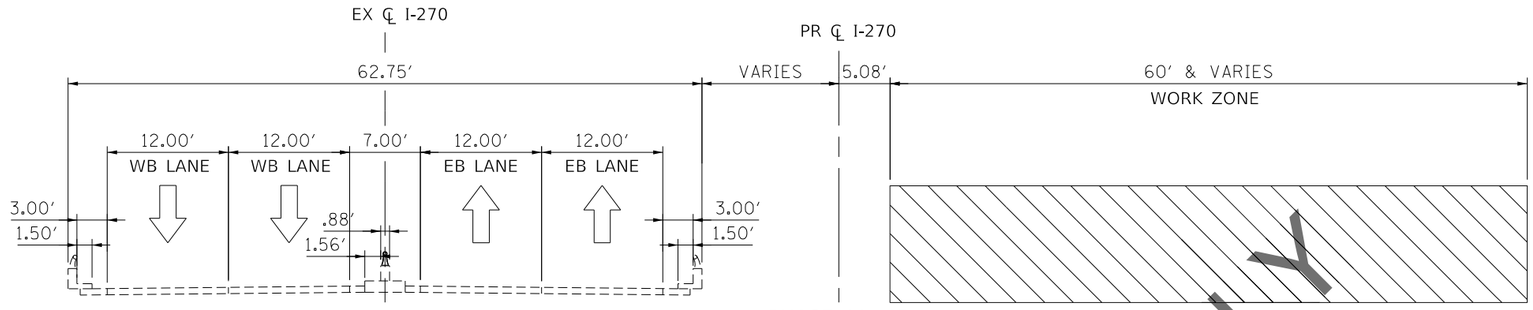

PHASE 1A, 1B
BRIDGE OVER MISSISSIPPI

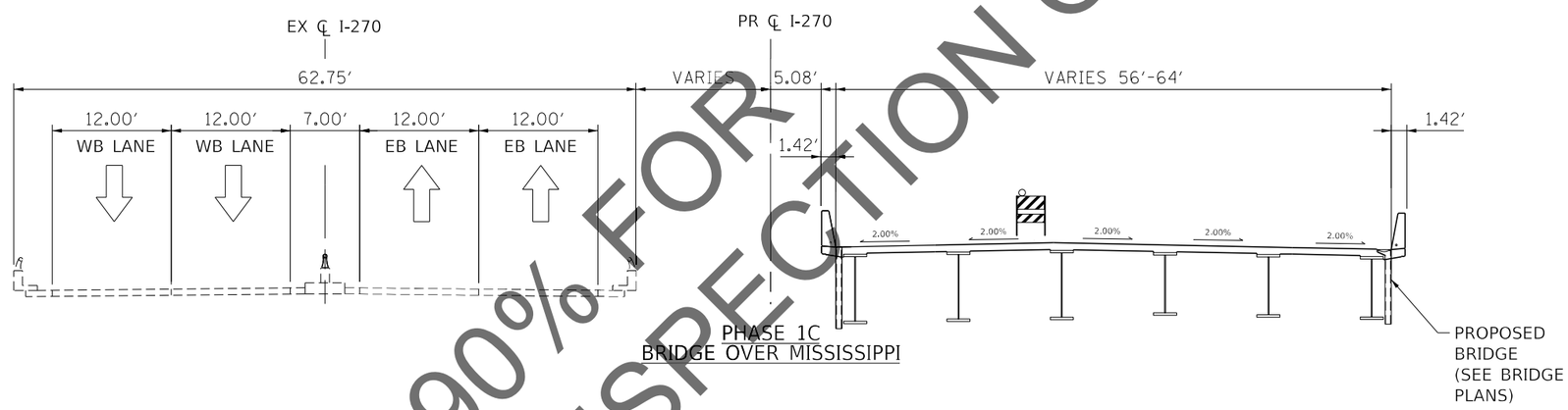

PHASE 1C
BRIDGE OVER MISSISSIPPI

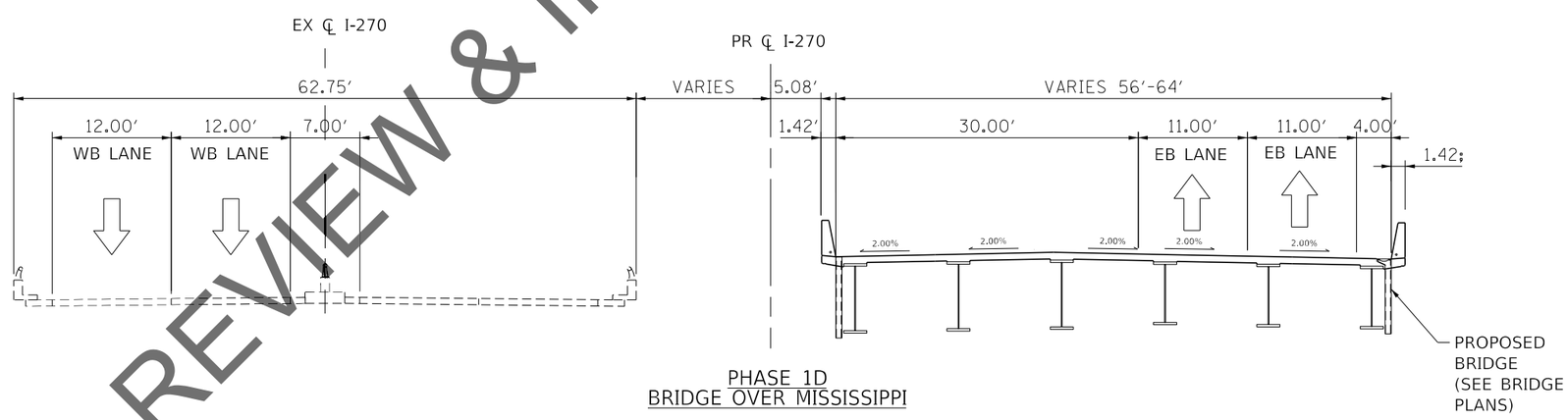

PHASE 1D
BRIDGE OVER MISSISSIPPI

90% FOR REVIEW & INSPECTION ONLY

MODEL: Default
FILE NAME: C:\CS4PDF\89539145086_169\D876190-sht-typical 07.dgn

HORNER & SHIFRIN Teaming with: PARSONS	USER NAME = PWICS$	DESIGNED -	REVISED -	STATE OF ILLINOIS DEPARTMENT OF TRANSPORTATION	FAI 270 TRAFFIC CONTROL PLAN TYPICAL SECTIONS – BRIDGE	F.A. RTE.	SECTION	COUNTY	TOTAL SHEETS / SHEET NO.
		DRAWN -	REVISED -						860 / 57
	PLOT SCALE = 7.5000 ' / in.	CHECKED -	REVISED -					CONTRACT NO.	
	PLOT DATE = 11/12/2021	DATE -	REVISED -		SCALE: SHEET 5 OF 5 SHEETS STA. TO STA.		ILLINOIS	FED. AID PROJECT	

SHEET LOCATION MAP

MAINTENANCE OF TRAFFIC LEGEND

- COMPLETED CONSTRUCTION
- WORK ZONE
- TEMPORARY PAVEMENT
- TEMPORARY PAVEMENT PLACED IN PREVIOUS STAGE
- TRAFFIC FLOW
- EXISTING/PROPOSED SIGN
- TYPE II BARRICADES OR DRUMS WITH BI-DIRECTIONAL STEADY BURN LIGHT AT 50' C-C (TYP.) 25' C-C IN CURVES AND RADII, AND 20' C-C IN TAPERS
- TYPE III BARRICADE
- TEMPORARY CONCRETE BARRIER
- TEMPORARY SHEET PILING
- IMPACT ATTENUATOR TL-3
- EXISTING/PROPOSED LIGHT POLE

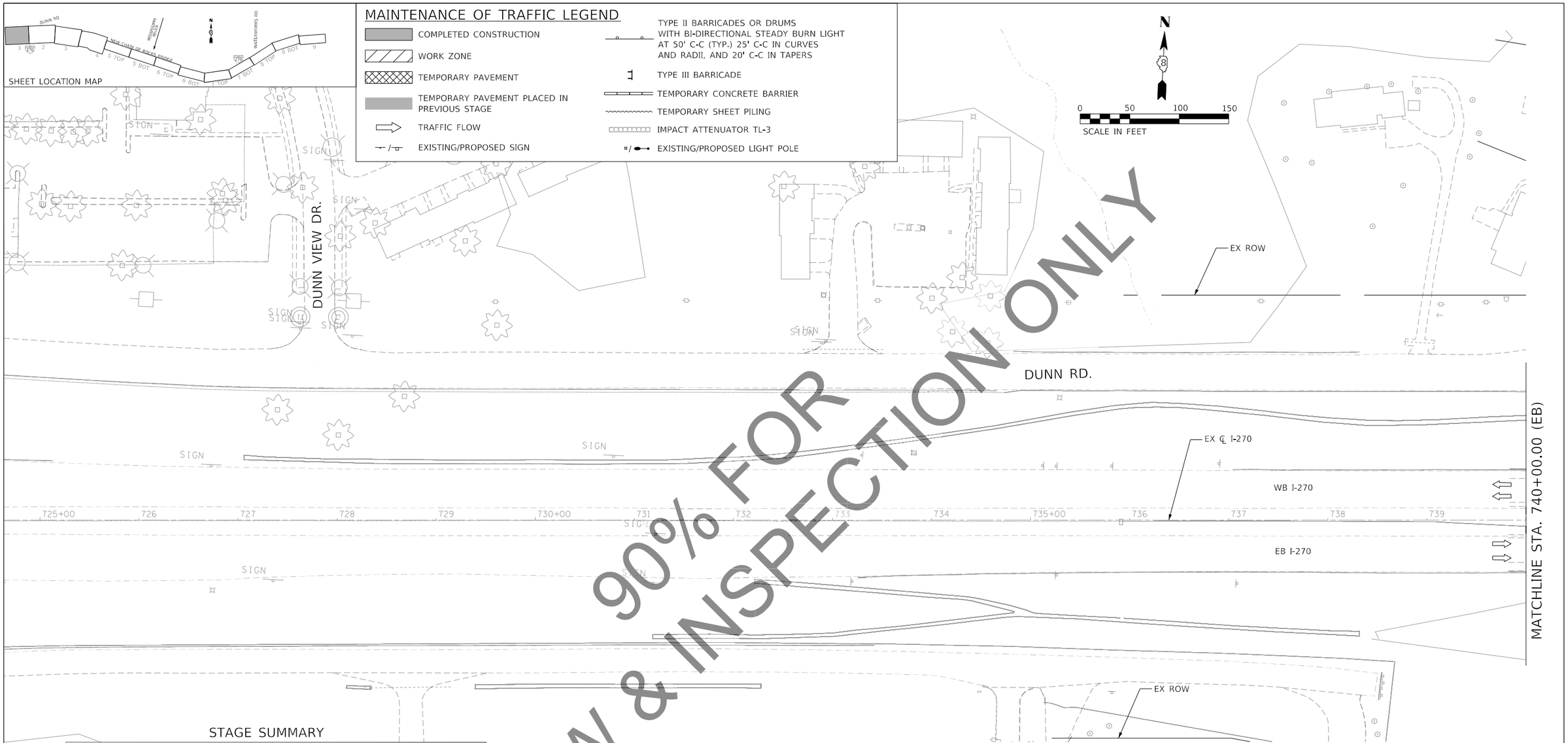

90% FOR REVIEW & INSPECTION ONLY

STAGE SUMMARY

MOT PRE STAGE:

1. MAINTAIN EASTBOUND AND WESTBOUND I-270 TRAFFIC ON EXISTING RIVER BRIDGE.

2. ON THE ILLINOIS SIDE, MAINTAIN EASTBOUND AND WESTBOUND I-270 TRAFFIC ON EXISTING ROADWAY.

3. CONSTRUCT TEMPORARY OUTSIDE SHOULDERS UP TO EB STATION 1871+00, AS SHOWN ON THE PLANS.

4. CONSTRUCT PERMANENT OUTSIDE SHOULDERS, GUARDRAIL AND LIGHTING FROM EB STATION 1871+00 TO THE CANAL BRIDGE, AS SHOWN ON THE PLANS.

STAGE QUANTITIES

PAY ITEM	PHASE 0	PHASE 1A	PHASE 1B	PHASE 1C	PHASE 1D	PHASE 2A	PHASE 2B	PHASE 2C	TOTAL QUANTITY	UNITS
TEMP CONC BARRIER (PINNED)	14270	14280	3590	4020	0	5780	300	0	42,240	FEET
RELOC TEMP CONC BARRIER	0	0	7110	0	7060	7100	0	0	21,270	FEET
IMPACT ATT TEMP (NON-R) TL 3	1	1	0	0	0	0	1	0	3	EACH
IMPACT ATT RELOC. (NON-R) TL 3	0	0	2	2	2	1	1	0	8	EACH
WET REFLECTIVE TEMP TAPE TY III - 4IN	0	0	0	0	0	0	0	59220	59220	FEET
SHORT TERM PAVEMENT MARKING	-	-	36260	19680	31430	59453	25240	0	172063	FEET
NIGHTTIME WORK ZONE LIGHTING	$80,000	$80,000	$40,000	$60,000	$80,000	$40,000	$60,000	$80,000	$440,000	LS
TEMPORARY PAVEMENT	0	13824	9720	0	0	0	0	0	23544	SQ YD
TEMPORARY PAVEMENT REMOVAL	0	13824	9720	0	0	0	0	0	23544	FEET

* FOR SIGN QUANTITIES, SEE SHEET PH0-02.

MODEL: Default
FILE NAME: C:\CS4PDF\99984\5086_1630\D76J90-sht-mot-PH0-01.dgn

HORNER & SHIFRIN
Teaming with: PARSONS

USER NAME = PWICS$	DESIGNED -	REVISED -	
	DRAWN - SQ	REVISED -	
PLOT SCALE = 50.0000 ' / in.	CHECKED - JB	REVISED -	
PLOT DATE = 11/17/2021	DATE - 2021/07/27	REVISED -	

STATE OF ILLINOIS
DEPARTMENT OF TRANSPORTATION

FAI 270 TRAFFIC CONTROL PLAN
PRE-STAGE

SCALE: 1" = 50' | SHEET 1 OF 9 SHEETS | STA. TO STA. 740+00.00

F.A. RTE.	SECTION	COUNTY	TOTAL SHEETS	SHEET NO.
270	60B-1	MADISON	860	58

CONTRACT NO. 76J90

ILLINOIS | FED. AID PROJECT

SHEET LOCATION MAP

MAINTENANCE OF TRAFFIC LEGEND

- COMPLETED CONSTRUCTION
- WORK ZONE
- TEMPORARY PAVEMENT
- TEMPORARY PAVEMENT PLACED IN PREVIOUS STAGE
- TRAFFIC FLOW
- EXISTING/PROPOSED SIGN
- TYPE II BARRICADES OR DRUMS WITH BI-DIRECTIONAL STEADY BURN LIGHT AT 50' C-C (TYP.) 25' C-C IN CURVES AND RADII, AND 20' C-C IN TAPERS
- TYPE III BARRICADE
- TEMPORARY CONCRETE BARRIER
- TEMPORARY SHEET PILING
- IMPACT ATTENUATOR TL-3
- EXISTING/PROPOSED LIGHT POLE

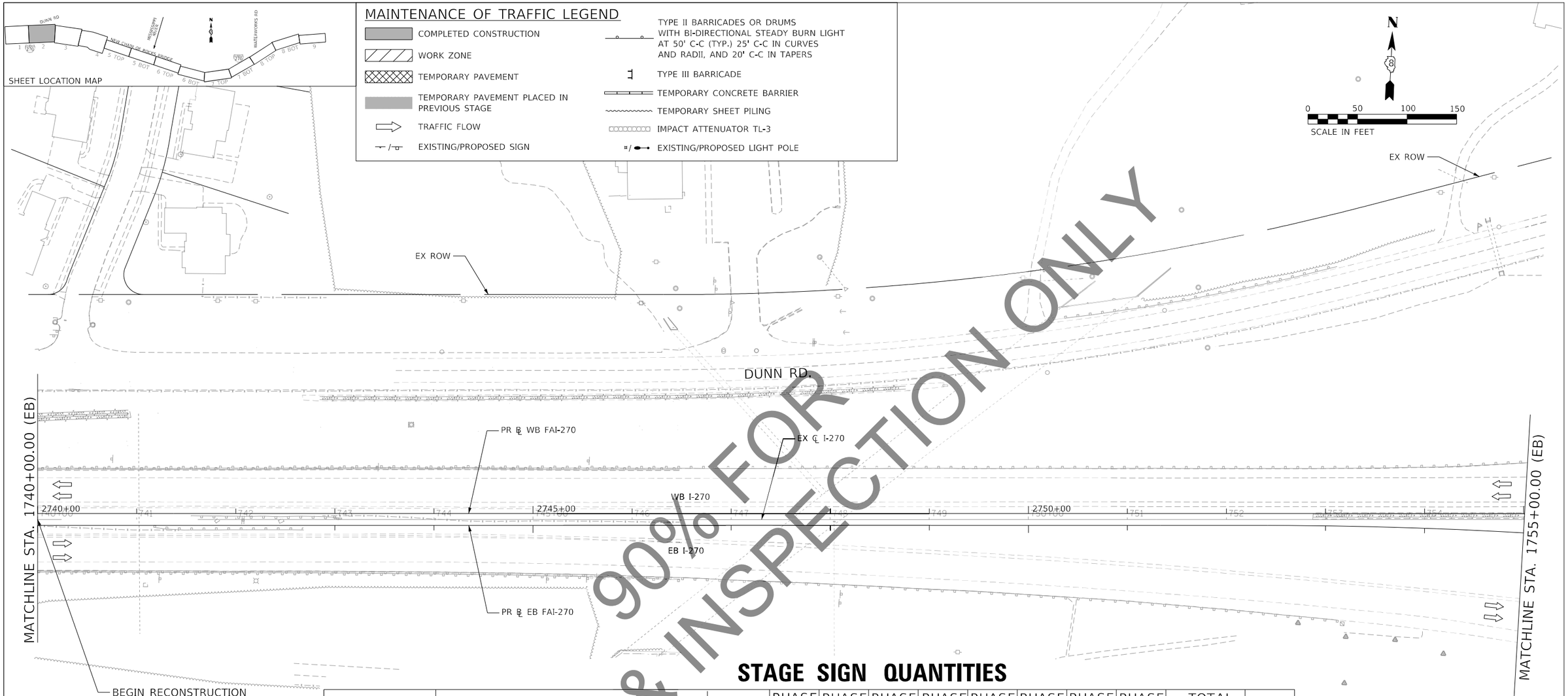

STAGE SIGN QUANTITIES

SIGN NO	TEXT	SIZE	PHASE 0	PHASE 1A	PHASE 1B	PHASE 1C	PHASE 1D	PHASE 2A	PHASE 2B	PHASE 2C	TOTAL QUANTITY	UNITS
G20-2	END ROAD WORK	48x24	1	2	1	1	1	1	1	1	9	EACH
W20-I103(0)	ROAD CONSTRUCTION AHEAD	48x48	1	2	1	1	1	1	1	1	9	EACH
W21-5aR	RIGHT SHOULDER CLOSED	48x48	1	-	-	-	-	-	-	-	1	EACH
W21-5b	SHOULDER CLOSED 1000 FT	48x48	2	-	-	-	-	-	-	-	2	EACH
W21-1(0)	WORKER		3	1	-	-	-	-	-	-	4	EACH
R16-7	NEXT XX FT	96x30	2	-	-	-	-	-	-	-	2	EACH
W13-1(0)	XX M.P.H.	24x24	-	2	4	4	2	2	3	2	19	EACH
W1-4R(0)	REVERSE CURVE (1 LANE)		-	-	-	-	-	-	1	-	1	EACH
W1-4bR(0)	REVERSE CURVE (2 OR MORE)	48x48	-	2	2	3	1	1	-	1	10	EACH
W1-4bL(0)	REVERSE CURVE (2 OR MORE)	48x48	-	-	2	1	1	1	1	1	7	EACH
W1-6R(O)	LARGE ARROW	60x30	-	1	-	1	-	1	1	1	5	EACH
W4-1(0)	MERGE	48x48	-	-	-	1	1	1	1	1	4	EACH
W4-5	ENTERING RDWY MERGE	48x48	-	-	-	-	-	1	-	-	1	EACH
W4-6	ENTERING RDWY ADDING LANE		-	-	-	-	2	-	-	-	2	EACH
W5-4(0)	RAMP NARROWS	48x48	-	-	-	-	1	-	-	-	1	EACH
E5-1a	EXIT	72x60	-	-	-	-	-	-	1	1	2	EACH
CMS	N/A	N/A	2	2	2	2	2	2	2	2	16	EACH

NOTE: SHEET INCLUDED FOR REFERENCE ONLY. SEE MoDOT RIVERVIEW DRIVE PLANS FOR ADDITIONAL INFORMATION.

90% REVIEW & INSPECTION ONLY FOR

MODEL: Default
FILE NAME: C:\ICS4PDF\9939\45086_1641\0376190h-jnl-mol-PH0-02.dgn

HORNER & SHIFRIN
Teaming with: PARSONS

USER NAME = PWICS$	DESIGNED - RO	REVISED -
	DRAWN - SQ	REVISED -
PLOT SCALE = 50.0000 ' / in.	CHECKED - JB	REVISED -
PLOT DATE = 11/12/2021	DATE - 2021/07/27	REVISED -

STATE OF ILLINOIS
DEPARTMENT OF TRANSPORTATION

FAI 270 TRAFFIC CONTROL PLAN
PRE-STAGE

SCALE: 1" = 50' | SHEET 2 OF 9 SHEETS | STA. 1740+00.00 TO STA. 1755+00.00

F.A. RTE.	SECTION	COUNTY	TOTAL SHEETS	SHEET NO.
270	60B-1	MADISON	860	59x

CONTRACT NO. 76J90

ILLINOIS | FED. AID PROJECT

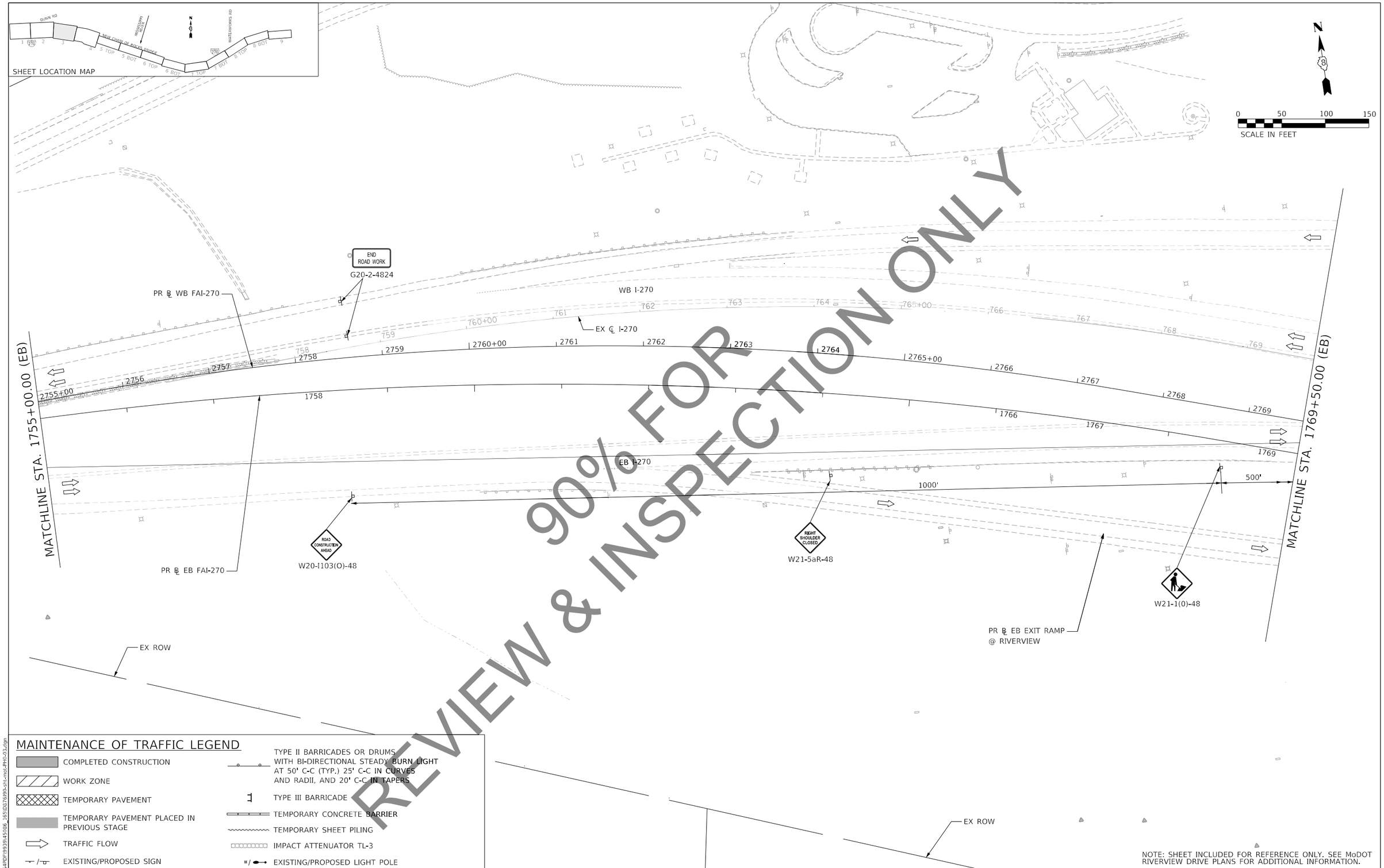

NOTE: SHEET INCLUDED FOR REFERENCE ONLY. SEE MoDOT RIVERVIEW DRIVE PLANS FOR ADDITIONAL INFORMATION.

MODEL: Default
FILE NAME: C:\CS4PDF\99394508_165\D76J90-sht-mot-PHI-03.dgn

HORNER & SHIFRIN
Teaming with: PARSONS

USER NAME = PWICS$	DESIGNED - RO	REVISED -	
	DRAWN - SQ	REVISED -	
PLOT SCALE = 50.0000 ' / in.	CHECKED - JB	REVISED -	
PLOT DATE = 11/12/2021	DATE - 2021/07/27	REVISED -	

STATE OF ILLINOIS
DEPARTMENT OF TRANSPORTATION

FAI 270 TRAFFIC CONTROL PLAN
PRE-STAGE

SCALE: 1" = 50' | SHEET 3 OF 9 SHEETS | STA. 1755+00.00 TO STA. 1769+50.00

F.A. RTE.	SECTION	COUNTY	TOTAL SHEETS	SHEET NO.
270	60B-1	MADISON	860	60X
		CONTRACT NO. 76J90		
		ILLINOIS FED. AID PROJECT		

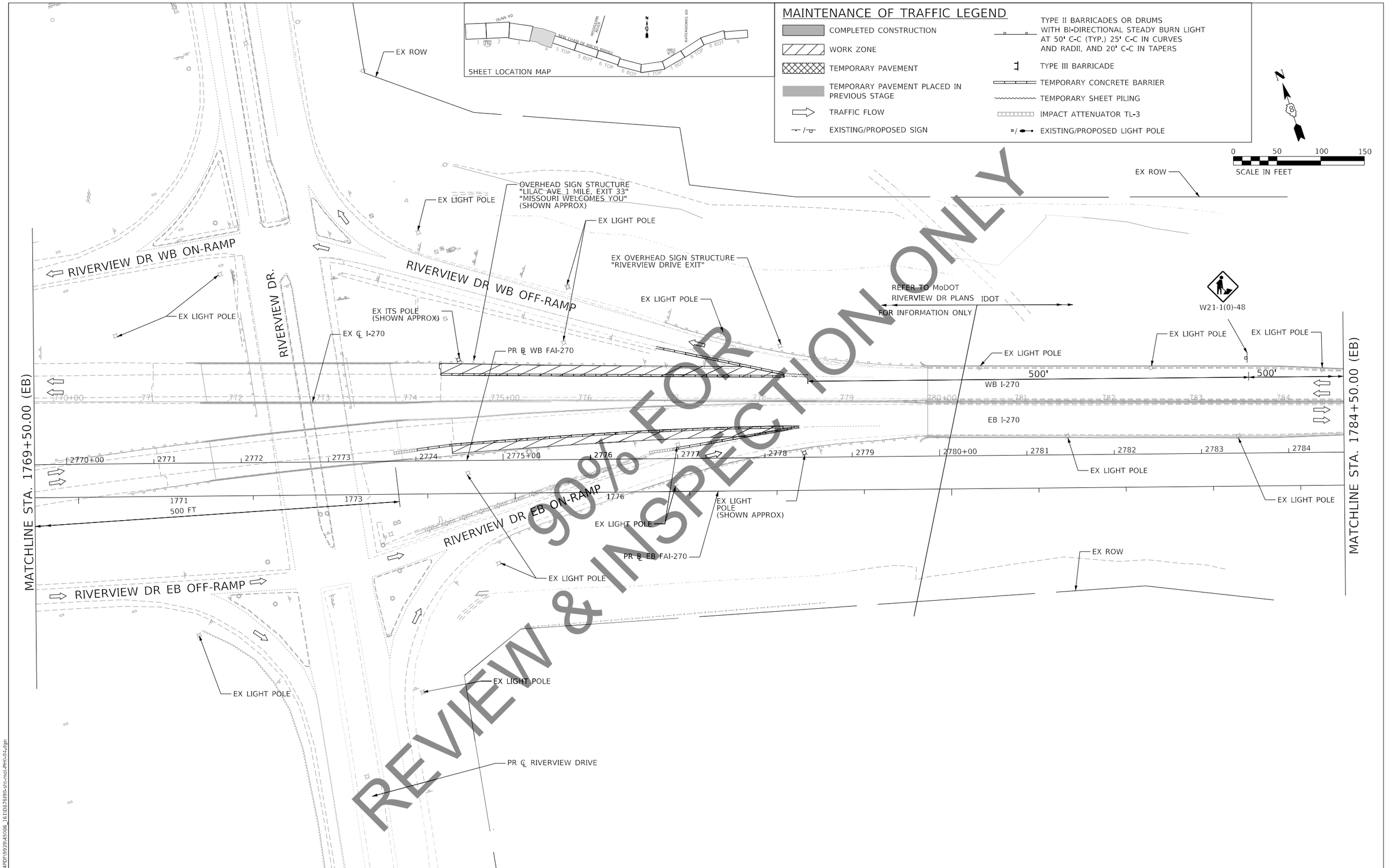

HORNER & SHIFRIN / PARSONS Teaming with:	USER NAME = PWICS$	DESIGNED - RO	REVISED -
		DRAWN - SQ	REVISED -
	PLOT SCALE = 50.0000 ' / in.	CHECKED - JB	REVISED -
	PLOT DATE = 11/12/2021	DATE - 2021/07/27	REVISED -

STATE OF ILLINOIS
DEPARTMENT OF TRANSPORTATION

FAI 270 TRAFFIC CONTROL PLAN
PRE-STAGE

SCALE: 1" = 50' | SHEET 4 OF 9 SHEETS | STA. 1769+50.00 TO STA. 1784+50.00

F.A. RTE.	SECTION	COUNTY	TOTAL SHEETS	SHEET NO.
270	60B-1	MADISON	860	81X
		CONTRACT NO. 76J90		
	ILLINOIS	FED. AID PROJECT		

MODEL: Default
FILE NAME: C:\ICS4PDF\09339\5086_161\D676J90-sht-mot-PH0-04.dgn

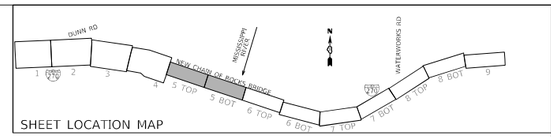

SHEET LOCATION MAP

MAINTENANCE OF TRAFFIC LEGEND

- COMPLETED CONSTRUCTION
- WORK ZONE
- TEMPORARY PAVEMENT
- TEMPORARY PAVEMENT PLACED IN PREVIOUS STAGE
- TRAFFIC FLOW
- EXISTING/PROPOSED SIGN
- TYPE II BARRICADES OR DRUMS WITH BI-DIRECTIONAL STEADY BURN LIGHT AT 50' C-C (TYP.) 25' C-C IN CURVES AND RADII, AND 20' C-C IN TAPERS
- TYPE III BARRICADE
- TEMPORARY CONCRETE BARRIER
- TEMPORARY SHEET PILING
- IMPACT ATTENUATOR TL-3
- EXISTING/PROPOSED LIGHT POLE

N

0 50 100 150
SCALE IN FEET

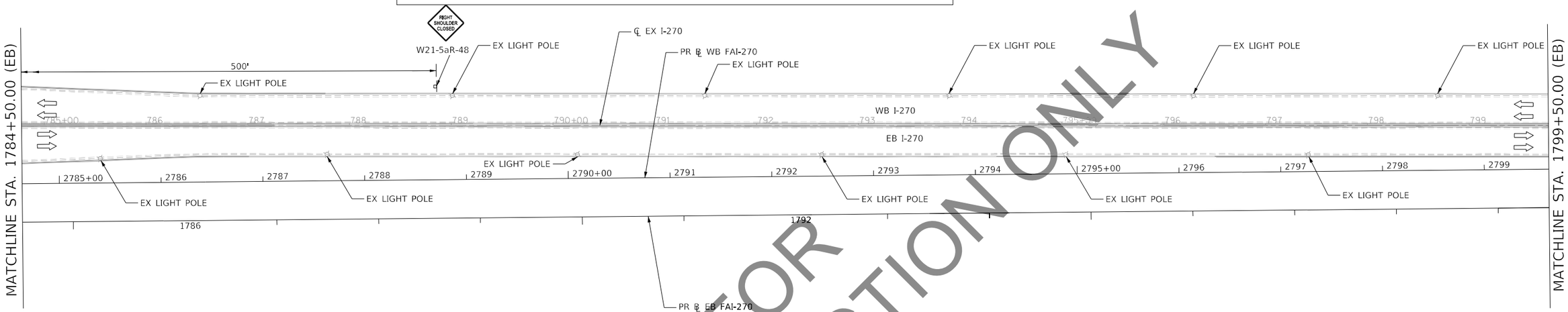

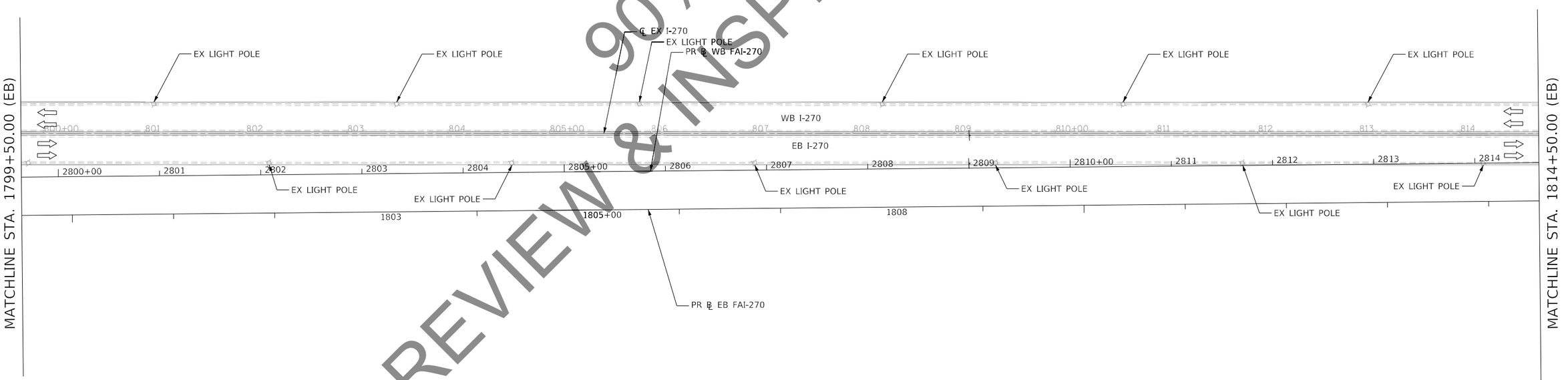

90% FOR REVIEW & INSPECTION ONLY

MODEL: Default
FILE NAME: C:\CS4PDF\99394508_162D876\90-ch-mot-PH1-05.dgn

HORNER & SHIFRIN / Teaming with: PARSONS	USER NAME = PWICS$	DESIGNED - RO	REVISED -
		DRAWN - SQ	REVISED -
	PLOT SCALE = 50.0000 ' / in.	CHECKED - JB	REVISED -
	PLOT DATE = 11/12/2021	DATE - 2021/07/27	REVISED -

STATE OF ILLINOIS
DEPARTMENT OF TRANSPORTATION

FAI 270 TRAFFIC CONTROL PLAN
PRE-STAGE

SCALE: 1" = 50' | SHEET 5 OF 9 SHEETS | STA. 1784+50.00 TO STA. 1814+50.00

F.A. RTE.	SECTION	COUNTY	TOTAL SHEETS	SHEET NO.
270	60B-1	MADISON	860	82
		CONTRACT NO. 76J90		
		ILLINOIS FED. AID PROJECT		

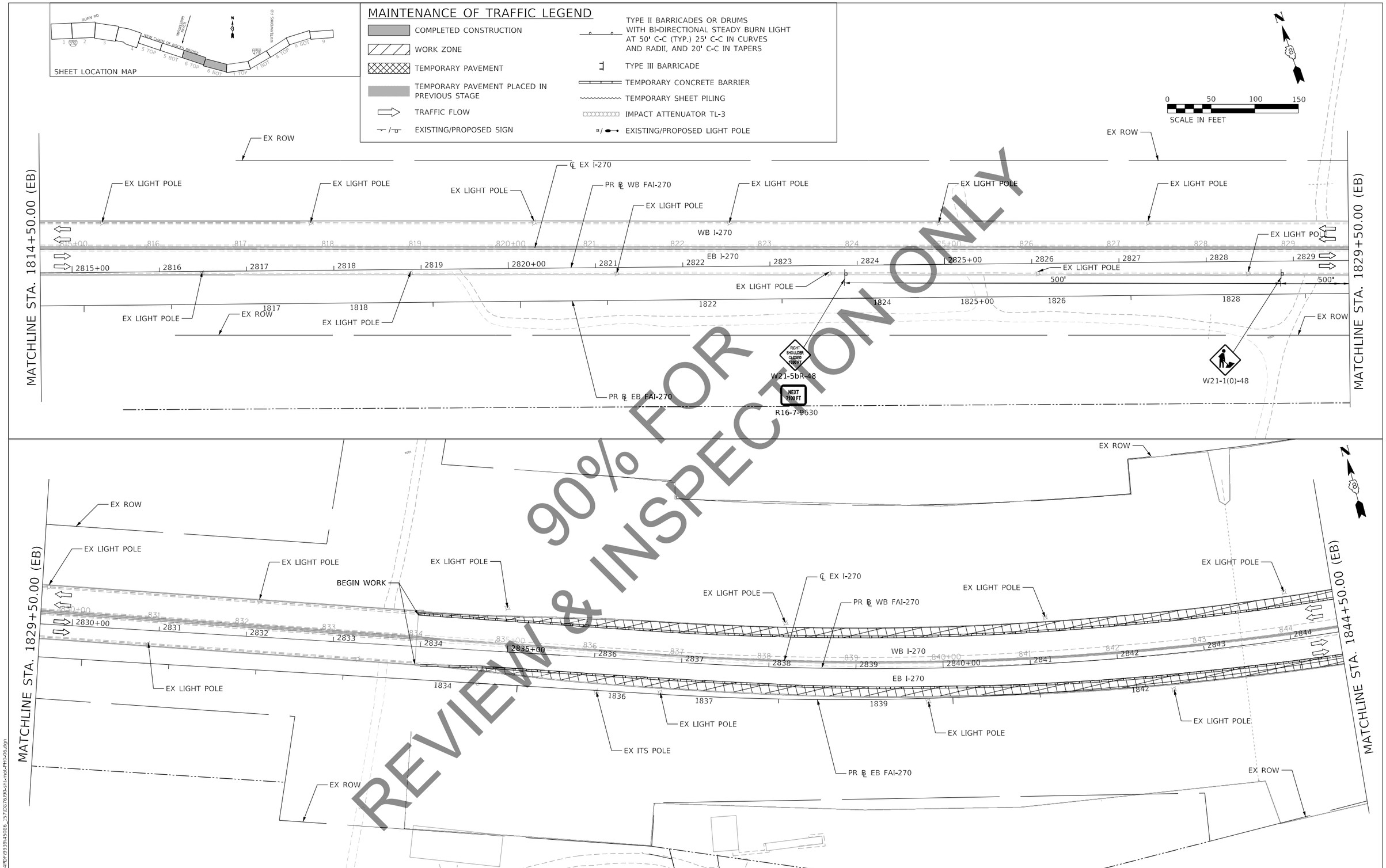

MODEL: Default
FILE NAME: C:\CS4PDF\9939\45086_1370\D76\90-ch-mot-PH1-06.dgn

HORNER & SHIFRIN / Teaming with: PARSONS	USER NAME = PWICS$	DESIGNED - RO	REVISED -
		DRAWN - SQ	REVISED -
	PLOT SCALE = 50.0000 ' / in.	CHECKED - JB	REVISED -
	PLOT DATE = 11/12/2021	DATE - 2021/07/27	REVISED -

STATE OF ILLINOIS
DEPARTMENT OF TRANSPORTATION

FAI 270 TRAFFIC CONTROL PLAN
PRE-STAGE

SCALE: 1" = 50' | SHEET 6 OF 9 SHEETS | STA. 1814+50.00 TO STA. 1844+50.00

F.A. RTE.	SECTION	COUNTY	TOTAL SHEETS	SHEET NO.
270	60B-1	MADISON	860	83X
		CONTRACT NO. 76J90		
		ILLINOIS	FED. AID PROJECT	

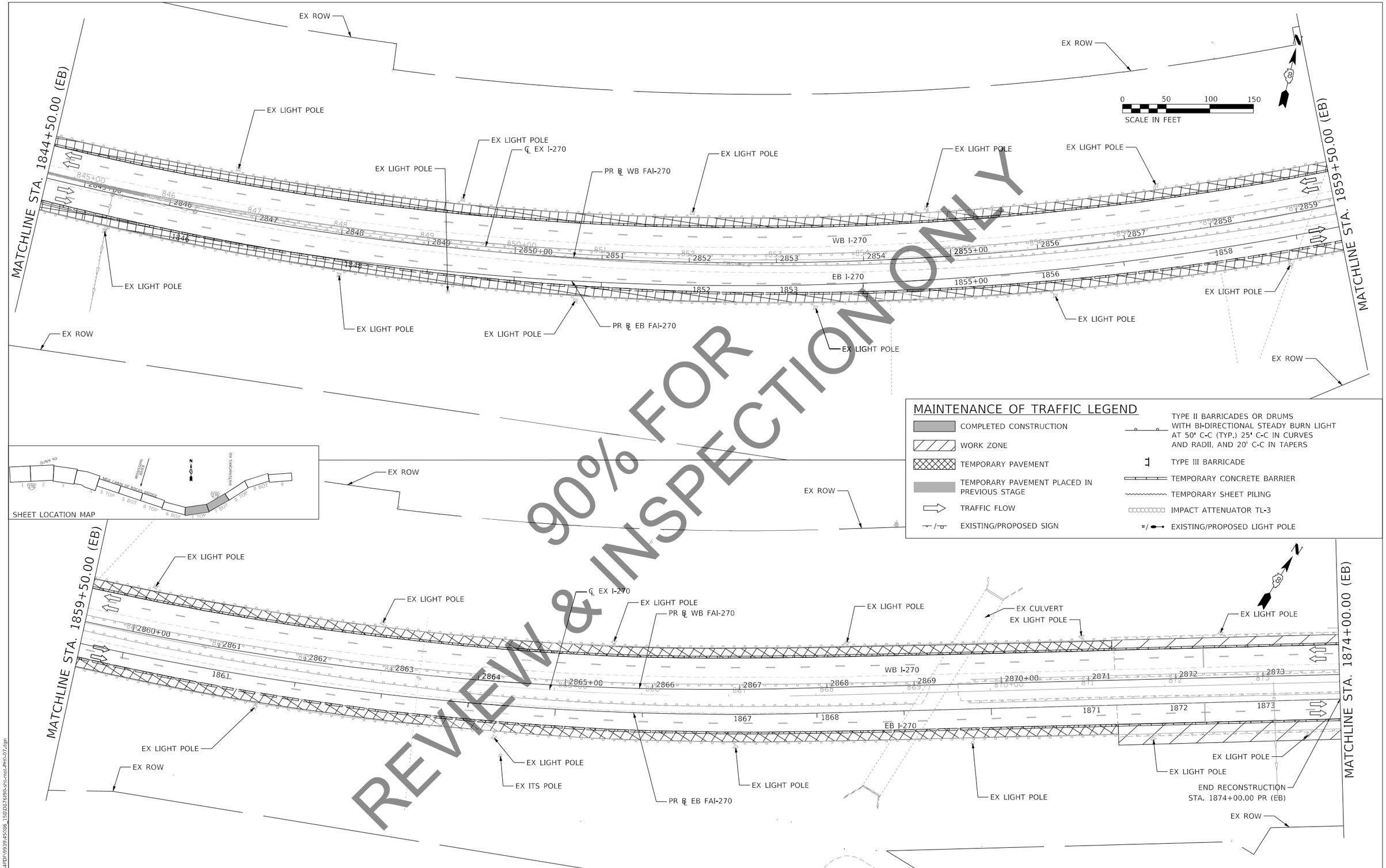

90% FOR REVIEW & INSPECTION ONLY

MODEL: Default
FILE NAME: C:\ICS4PDF\9939\45986_150D876\9b-sht-mot-PHI-07.dgn

HORNER & SHIFRIN
Teaming with: PARSONS

USER NAME = PWICS$	DESIGNED - RO	REVISED -	
	DRAWN - SQ	REVISED -	
PLOT SCALE = 50.0000 ' / in.	CHECKED - JB	REVISED -	
PLOT DATE = 11/12/2021	DATE - 2021/07/27	REVISED -	

STATE OF ILLINOIS
DEPARTMENT OF TRANSPORTATION

FAI 270 TRAFFIC CONTROL PLAN
PRE-STAGE

SCALE: 1" = 50' | SHEET 7 OF 9 SHEETS | STA. 1844+50.00 TO STA. 1874+00.00

F.A. RTE.	SECTION	COUNTY	TOTAL SHEETS	SHEET NO.
270	60B-1	MADISON	860	64K

CONTRACT NO. 76J90
ILLINOIS | FED. AID PROJECT

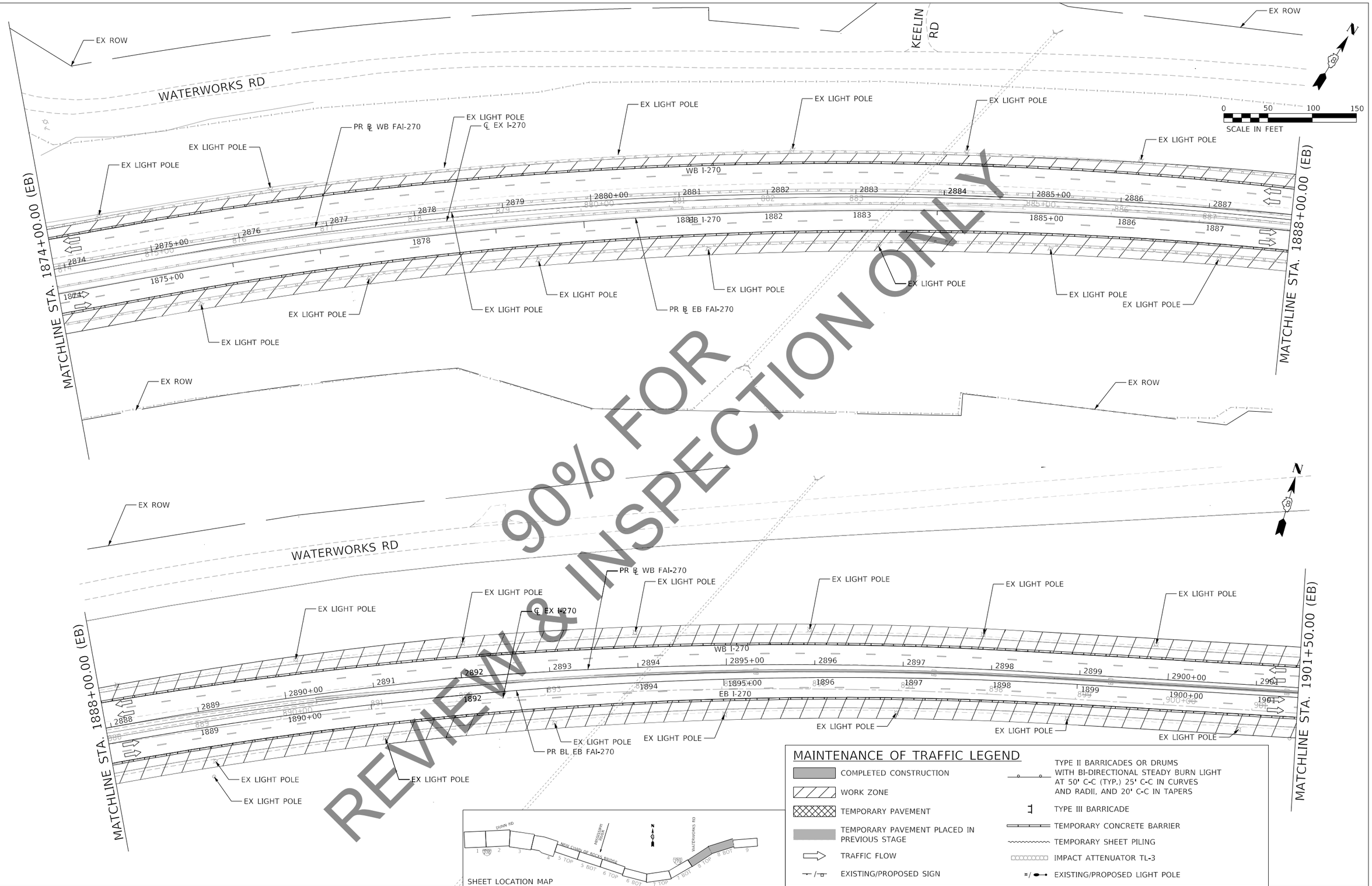

MODEL: Default
FILE NAME: C:\ICS4PDF\9939\45086_159\D8761B9-sht-mot-PH1-08.dgn

HORNER & SHIFRIN Teaming with: PARSONS	USER NAME = PWICS$	DESIGNED - RO	REVISED -	STATE OF ILLINOIS DEPARTMENT OF TRANSPORTATION	FAI 270 TRAFFIC CONTROL PLAN PRE–STAGE	F.A. RTE.	SECTION	COUNTY	TOTAL SHEETS / SHEET NO.
		DRAWN - SQ	REVISED -			270	60B-1	MADISON	860 / 85
	PLOT SCALE = 50.0000 ' / in.	CHECKED - JB	REVISED -					CONTRACT NO. 76J90	
	PLOT DATE = 11/12/2021	DATE - 2021/07/27	REVISED -		SCALE: 1" = 50' SHEET 8 OF 9 SHEETS STA. 1874+00.00 TO STA. 1901+50.00			ILLINOIS FED. AID PROJECT	

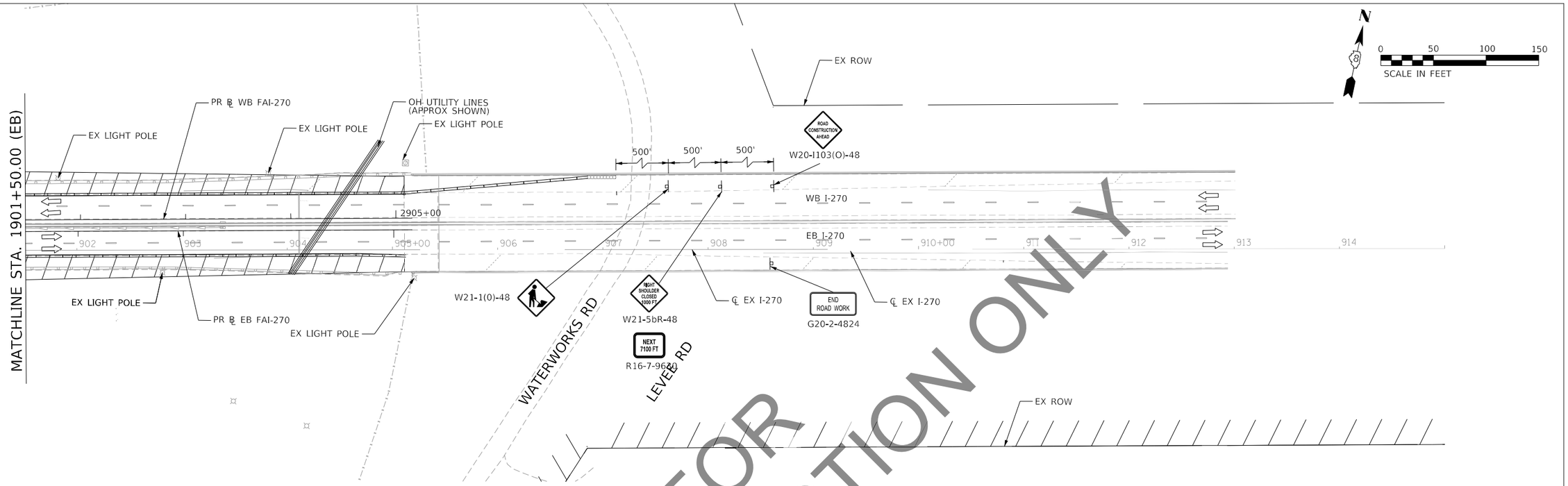

90% FOR REVIEW & INSPECTION ONLY

SHEET LOCATION MAP

MAINTENANCE OF TRAFFIC LEGEND

- COMPLETED CONSTRUCTION
- WORK ZONE
- TEMPORARY PAVEMENT
- TEMPORARY PAVEMENT PLACED IN PREVIOUS STAGE
- TRAFFIC FLOW
- EXISTING/PROPOSED SIGN
- TYPE II BARRICADES OR DRUMS WITH BI-DIRECTIONAL STEADY BURN LIGHT AT 50' C-C (TYP.) 25' C-C IN CURVES AND RADII, AND 20' C-C IN TAPERS
- TYPE III BARRICADE
- TEMPORARY CONCRETE BARRIER
- TEMPORARY SHEET PILING
- IMPACT ATTENUATOR TL-3
- EXISTING/PROPOSED LIGHT POLE

MODEL: Default
FILE NAME: C:\CS4PDF\99394\5086_166\D76\90-sht-mot-PH1-09.dgn

HORNER & SHIFRIN
Teaming with: PARSONS

USER NAME = PWICS$	DESIGNED - RO	REVISED -	
	DRAWN - SQ	REVISED -	
PLOT SCALE = 50.0000 ' / in.	CHECKED - JB	REVISED -	
PLOT DATE = 11/12/2021	DATE - 2021/07/27	REVISED -	

STATE OF ILLINOIS
DEPARTMENT OF TRANSPORTATION

FAI 270 TRAFFIC CONTROL PLAN
PRE–STAGE

SCALE: 1" = 50' | SHEET 9 OF 9 SHEETS | STA. 1901+50.00 TO STA.

F.A. RTE.	SECTION	COUNTY	TOTAL SHEETS	SHEET NO.
270	60B-1	MADISON	860	86~~6~~

CONTRACT NO. 76J90

ILLINOIS | FED. AID PROJECT

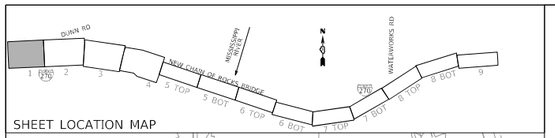

SHEET LOCATION MAP

MAINTENANCE OF TRAFFIC LEGEND

- COMPLETED CONSTRUCTION
- WORK ZONE
- TEMPORARY PAVEMENT
- TEMPORARY PAVEMENT PLACED IN PREVIOUS STAGE
- TRAFFIC FLOW
- EXISTING/PROPOSED SIGN
- TYPE II BARRICADES OR DRUMS WITH BI-DIRECTIONAL STEADY BURN LIGHT AT 50' C-C (TYP.) 25' C-C IN CURVES AND RADII, AND 20' C-C IN TAPERS
- TYPE III BARRICADE
- TEMPORARY CONCRETE BARRIER
- TEMPORARY SHEET PILING
- IMPACT ATTENUATOR TL-3
- EXISTING/PROPOSED LIGHT POLE

N

0 50 100 150

SCALE IN FEET

DUNN VIEW DR.

SIGN

EX ROW

DUNN RD.

EX ℄ I-270

WB I-270

EB I-270

725+00 726 727 728 729 730+00 731 732 733 734 735+00 736 737 738 739

MATCHLINE STA. 740+00.00

RADIO TV TOWER

90% FOR REVIEW & INSPECTION ONLY

STAGE SUMMARY

MOT PHASE 1A

1. MAINTAIN EASTBOUND AND WESTBOUND I-270 TRAFFIC ON EXISTING RIVER BRIDGE.

2. ON THE ILLINOIS SIDE, SHIFT THE EASTBOUND AND WESTBOUND I-270 TRAFFIC TO THE OUTSIDE SHOULDERS AND EXISTING ROADWAY.

3. CONSTRUCT TEMPORARY PAVEMENT IN THE MEDIAN.

4. BEGIN RIVER BRIDGE CONSTRUCTION.

NOTE: SHEET INCLUDED FOR REFERENCE ONLY. SEE MoDOT RIVERVIEW DRIVE PLANS FOR ADDITIONAL INFORMATION.

MODEL: Default
FILE NAME: C:\CS4PDF\9976\45086_1741D576J90-pht-mot-PH1A-01.dgn

HORNER & SHIFRIN / Teaming with: PARSONS	USER NAME = PWICS$	DESIGNED -	REVISED -
		DRAWN -	REVISED -
	PLOT SCALE = 50.0000 ' / in.	CHECKED -	REVISED -
	PLOT DATE = 11/17/2021	DATE -	REVISED -

STATE OF ILLINOIS
DEPARTMENT OF TRANSPORTATION

FAI 270 TRAFFIC CONTROL PLAN
PHASE 1A

SCALE: 1" = 50' | SHEET 1 OF 9 SHEETS | STA. TO STA. 740+00.00

F.A. RTE.	SECTION	COUNTY	TOTAL SHEETS	SHEET NO.
270	60B-1	MADISON	860	69
		CONTRACT NO. 76J90		
		ILLINOIS	FED. AID PROJECT	

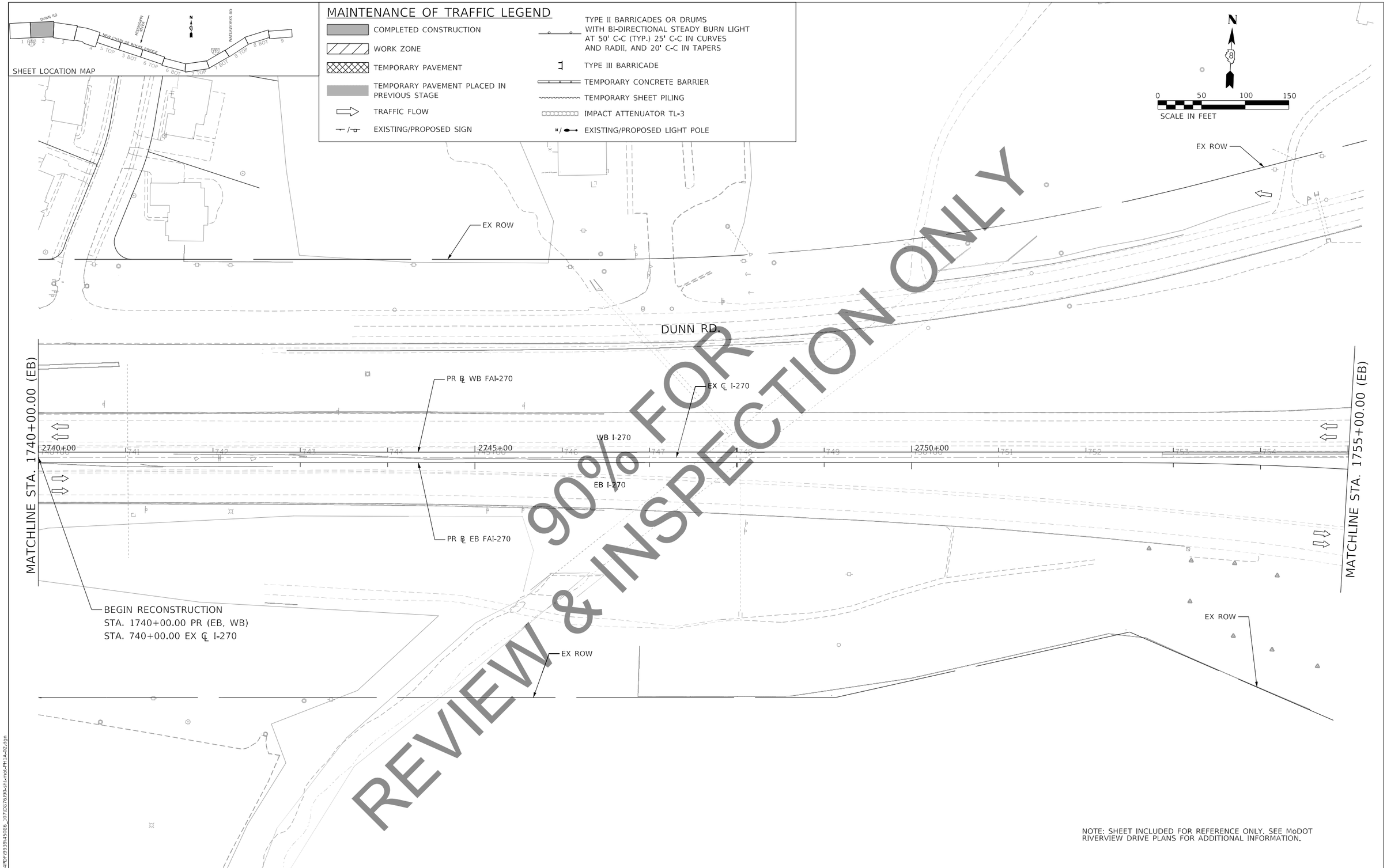

NOTE: SHEET INCLUDED FOR REFERENCE ONLY. SEE MoDOT RIVERVIEW DRIVE PLANS FOR ADDITIONAL INFORMATION.

MODEL: Default
FILE NAME: C:\JCS4PDF\6939\45086_107\D876190\h-shl-mot-PH1A-02.dgn

HORNER & SHIFRIN / Teaming with: PARSONS	USER NAME = PWICS$	DESIGNED - RO	REVISED -
		DRAWN - SQ	REVISED -
	PLOT SCALE = 50.0000 ' / in.	CHECKED - JB	REVISED -
	PLOT DATE = 11/12/2021	DATE - 2021/07/27	REVISED -

STATE OF ILLINOIS
DEPARTMENT OF TRANSPORTATION

FAI 270 TRAFFIC CONTROL PLAN
PHASE 1A

SCALE: 1" = 50' | SHEET 2 OF 9 SHEETS | STA. 1740+00.00 TO STA. 1755+00.00

F.A. RTE.	SECTION	COUNTY	TOTAL SHEETS	SHEET NO.
270	60B-1	MADISON	860	68
		CONTRACT NO. 76J90		
		ILLINOIS	FED. AID PROJECT	

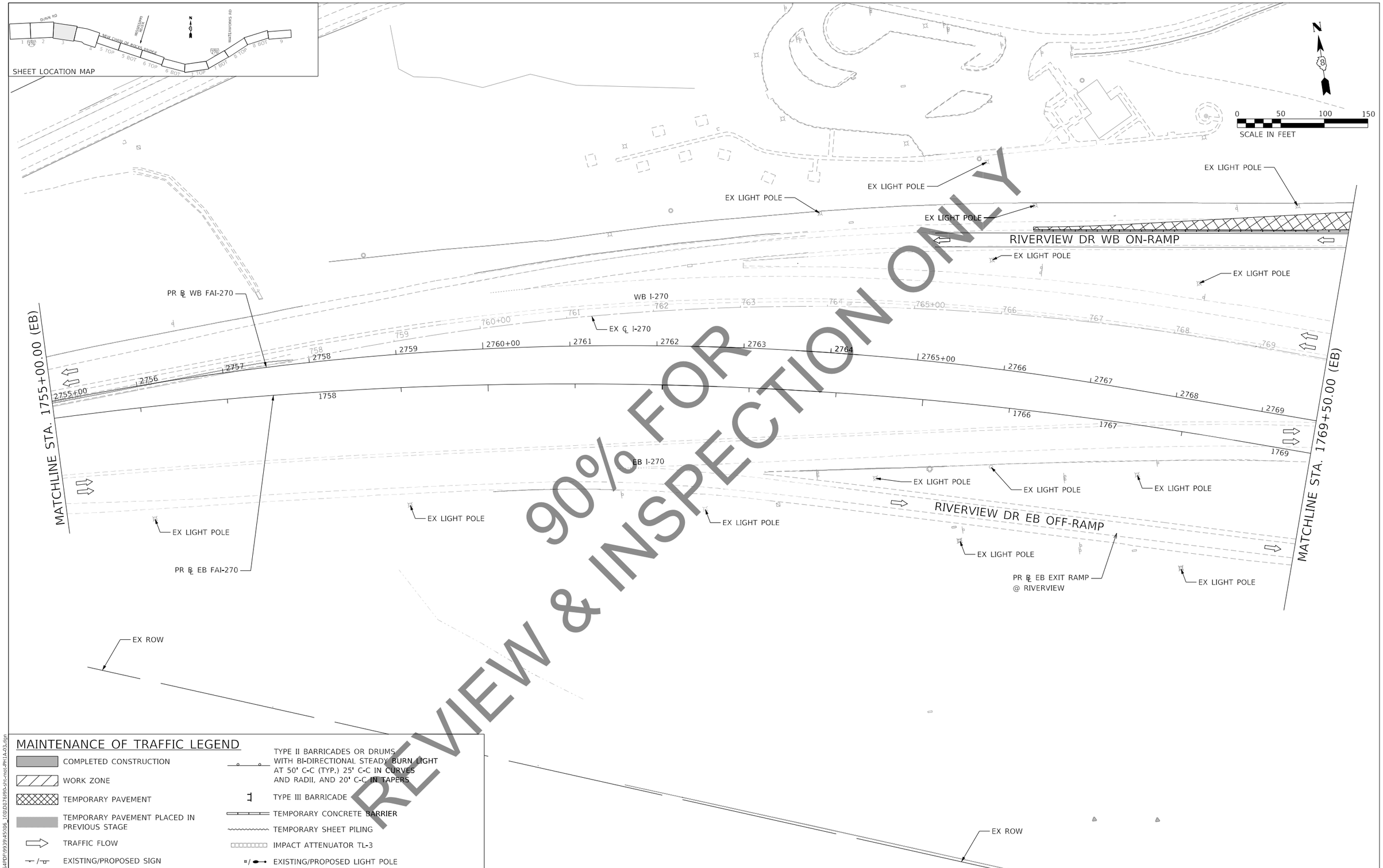

MODEL: Default
FILE NAME: C:\ICS4PDF\99394508 6_T60\D876\01-sht-mot-PH1A-03.dgn

HORNER & SHIFRIN
Teaming with: PARSONS

USER NAME = PWICS$	DESIGNED - RO	REVISED -	
	DRAWN - SQ	REVISED -	
PLOT SCALE = 50.0000 ' / in.	CHECKED - JB	REVISED -	
PLOT DATE = 11/12/2021	DATE - 2021/07/27	REVISED -	

STATE OF ILLINOIS
DEPARTMENT OF TRANSPORTATION

FAI 270 TRAFFIC CONTROL PLAN
PHASE 1A

SCALE: 1" = 50' | SHEET 3 OF 9 SHEETS | STA. 1755+00.00 TO STA. 1769+50.00

F.A. RTE.	SECTION	COUNTY	TOTAL SHEETS	SHEET NO.
270	60B-1	MADISON	860	69

CONTRACT NO. 76J90

ILLINOIS | FED. AID PROJECT

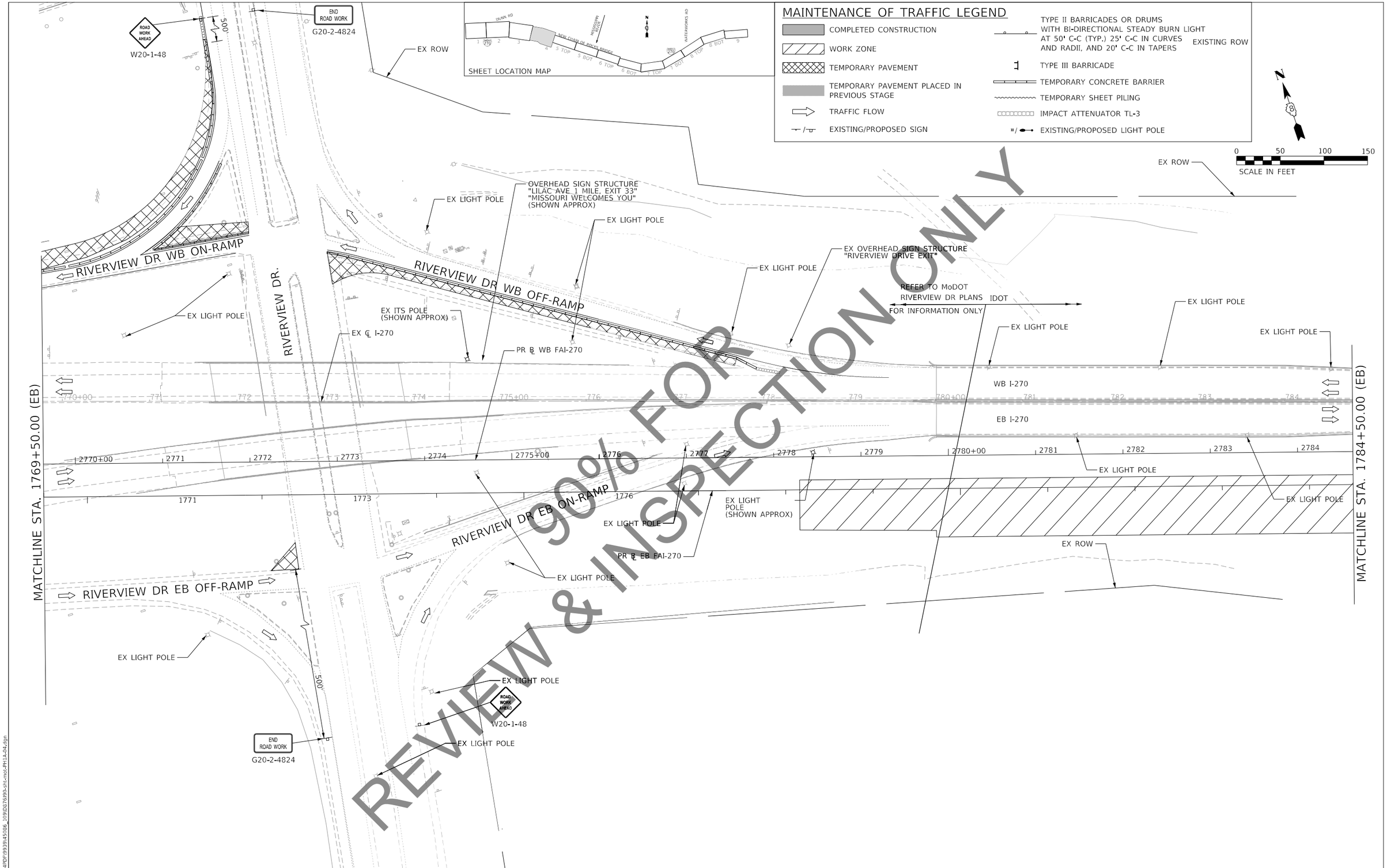

HORNER & SHIFRIN Teaming with: PARSONS	USER NAME = PWICS$	DESIGNED -	REVISED -	STATE OF ILLINOIS DEPARTMENT OF TRANSPORTATION	FAI 270 TRAFFIC CONTROL PLAN PHASE 1A	F.A. RTE.	SECTION	COUNTY	TOTAL SHEETS / SHEET NO.
		DRAWN -	REVISED -			270	60B-1	MADISON	860 / 70
	PLOT SCALE = 50.0000 ' / in.	CHECKED -	REVISED -					CONTRACT NO. 76J90	
	PLOT DATE = 11/12/2021	DATE - 2021/07/27	REVISED -		SCALE: 1" = 50' SHEET 4 OF 9 SHEETS STA. 1769+50.00 TO STA. 1784+50.00		ILLINOIS	FED. AID PROJECT	

MODEL: Default
FILE NAME: C:\ICS4PDF\9939\45086_109\D376J90\ch-mot-PH1A-04.dgn

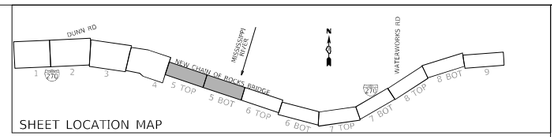

SHEET LOCATION MAP

MAINTENANCE OF TRAFFIC LEGEND

- COMPLETED CONSTRUCTION
- WORK ZONE
- TEMPORARY PAVEMENT
- TEMPORARY PAVEMENT PLACED IN PREVIOUS STAGE
- TRAFFIC FLOW
- EXISTING/PROPOSED SIGN
- TYPE II BARRICADES OR DRUMS WITH BI-DIRECTIONAL STEADY BURN LIGHT AT 50' C-C (TYP.) 25' C-C IN CURVES AND RADII, AND 20' C-C IN TAPERS
- TYPE III BARRICADE
- TEMPORARY CONCRETE BARRIER
- TEMPORARY SHEET PILING
- IMPACT ATTENUATOR TL-3
- EXISTING/PROPOSED LIGHT POLE

N

0 50 100 150
SCALE IN FEET

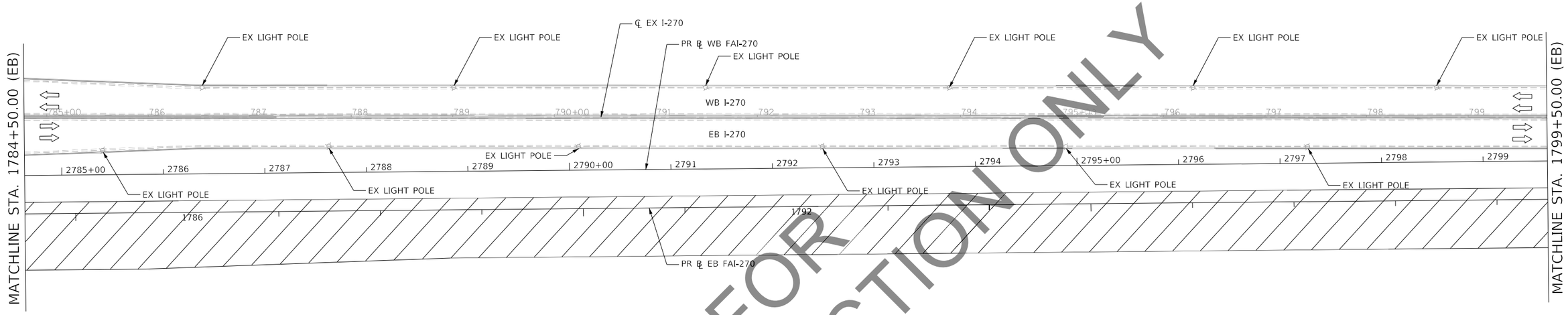

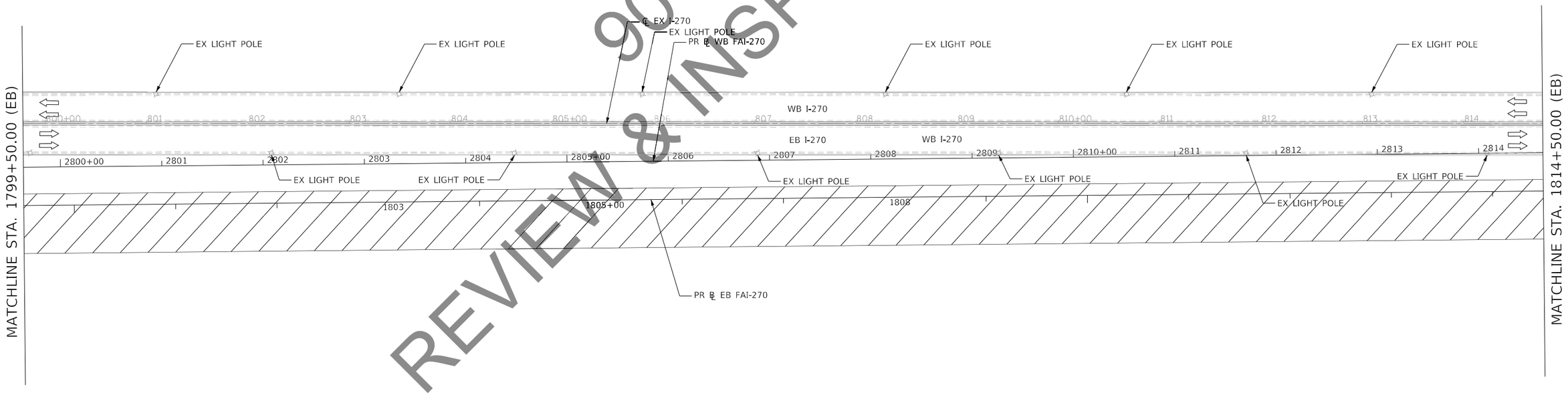

90% FOR REVIEW & INSPECTION ONLY

MODEL: Default
FILE NAME: C:\CS4PDF\99394508_1100D876\90-ph-mot-PH1A-05.dgn

HORNER & SHIFRIN Teaming with: PARSONS	USER NAME = PWICS$	DESIGNED - RO	REVISED -	STATE OF ILLINOIS DEPARTMENT OF TRANSPORTATION	FAI 270 TRAFFIC CONTROL PLAN PHASE 1A	F.A. RTE.	SECTION	COUNTY	TOTAL SHEETS / SHEET NO.
		DRAWN - SQ	REVISED -			270	60B-1	MADISON	860 / 710
	PLOT SCALE = 50.0000 ' / in.	CHECKED - JB	REVISED -					CONTRACT NO. 76J90	
	PLOT DATE = 11/12/2021	DATE - 2021/07/27	REVISED -		SCALE: 1" = 50' SHEET 5 OF 9 SHEETS STA. 1784+50.00 TO STA. 1814+50.00			ILLINOIS FED. AID PROJECT	

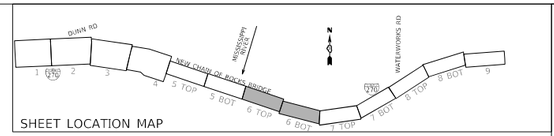

MAINTENANCE OF TRAFFIC LEGEND

- COMPLETED CONSTRUCTION
- WORK ZONE
- TEMPORARY PAVEMENT
- TEMPORARY PAVEMENT PLACED IN PREVIOUS STAGE
- TRAFFIC FLOW
- EXISTING/PROPOSED SIGN
- TYPE II BARRICADES OR DRUMS WITH BI-DIRECTIONAL STEADY BURN LIGHT AT 50' C-C (TYP.) 25' C-C IN CURVES AND RADII, AND 20' C-C IN TAPERS
- TYPE III BARRICADE
- TEMPORARY CONCRETE BARRIER
- TEMPORARY SHEET PILING
- IMPACT ATTENUATOR TL-3
- EXISTING/PROPOSED LIGHT POLE

1. WHITE PAVEMENT MARKING TAPE, TYPE III 4"
2. WHITE DASHED PAVEMENT MARKING TAPE, TYPE III 4"
3. YELLOW PAVEMENT MARKING TAPE, TYPE III 4"

0 50 100 150
SCALE IN FEET

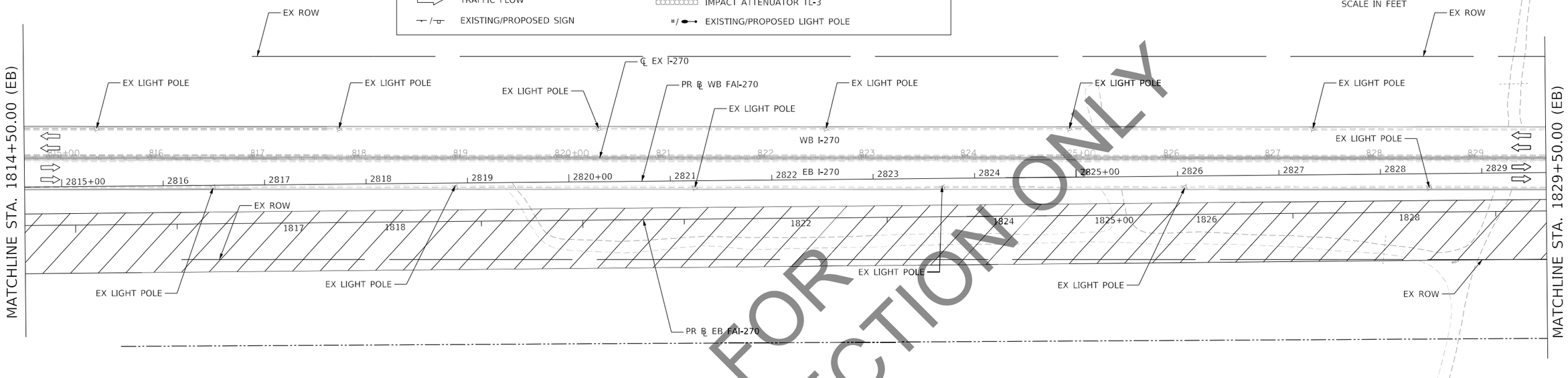

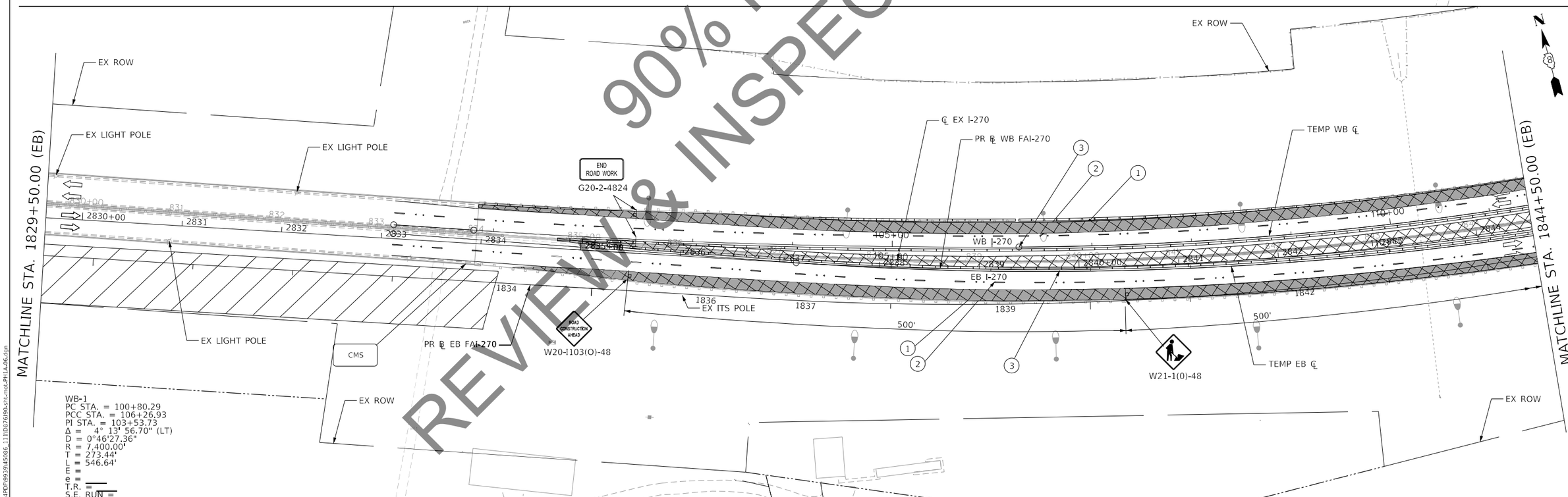

90% FOR REVIEW & INSPECTION ONLY

MODEL: Default
FILE NAME: C:\CS4PDF\99390\45086_1110D76\90-ph-mot-PH1A-06.dgn

HORNER & SHIFRIN
Teaming with: PARSONS

USER NAME = PWICS$	DESIGNED - RO	REVISED -	
	DRAWN - SQ	REVISED -	
PLOT SCALE = 50.0000 ' / in.	CHECKED - JB	REVISED -	
PLOT DATE = 11/12/2021	DATE - 2021/07/27	REVISED -	

STATE OF ILLINOIS
DEPARTMENT OF TRANSPORTATION

FAI 270 TRAFFIC CONTROL PLAN
PHASE 1A

SCALE: 1" = 50' | SHEET 6 OF 9 SHEETS | STA. 1814+50.00 TO STA. 1844+50.00

F.A. RTE.	SECTION	COUNTY	TOTAL SHEETS	SHEET NO.
270	60B-1	MADISON	860	72

CONTRACT NO. 76J90
ILLINOIS | FED. AID PROJECT

EB-1
PC STA. = 104+04.82
PT STA. = 134+96.10
PI STA. = 120+66.54
Δ = 51° 54' 23" (LT)
D = 52°05'36.09"
R = 3,400.00'
T = 1,661.72'
L = 3,091.28'
E =
e = ____
T.R. = ____
S.E. RUN = ____

WB-2
PCC STA. = 106+26.93
PT STA. = 134+29.03
PI STA. = 121+14.26
Δ = 47° 31' 39" (LT)
D = 1°41'46.12"
R = 3,378.00'
T = 1,487.33'
L = 2,802.10'
E =
e = ____
T.R. = ____
S.E. RUN = ____

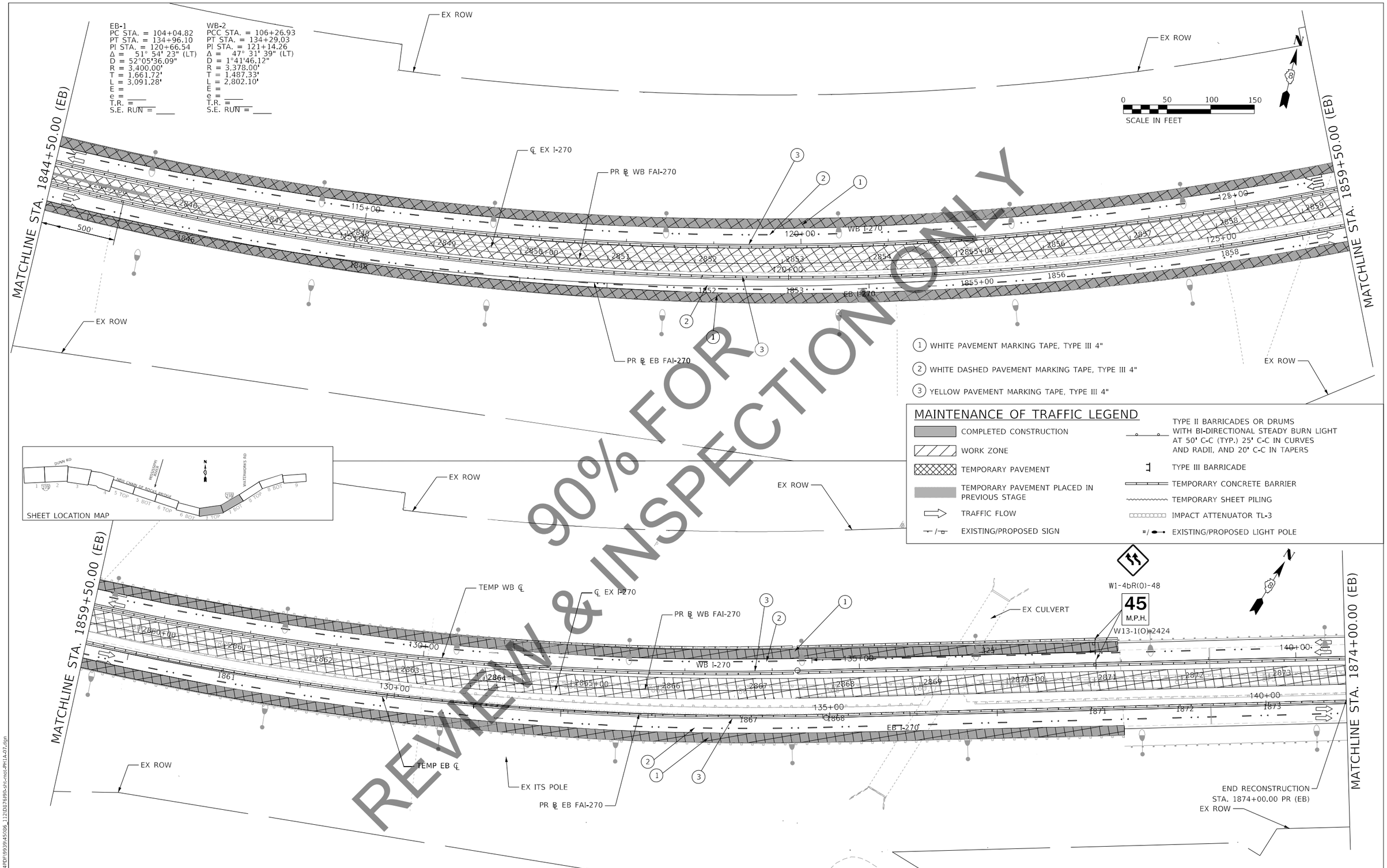

90% FOR REVIEW & INSPECTION ONLY

MODEL: Default
FILE NAME: C:\CS4PDF\99394\5086_112\D876190-sht-mot-PH1A-07.dgn

HORNER & SHIFRIN
Teaming with: PARSONS

USER NAME = PWICS$	DESIGNED - RO	REVISED -	
	DRAWN - SQ	REVISED -	
PLOT SCALE = 50.0000 ' / in.	CHECKED - JB	REVISED -	
PLOT DATE = 11/12/2021	DATE - 2021/07/27	REVISED -	

STATE OF ILLINOIS
DEPARTMENT OF TRANSPORTATION

FAI 270 TRAFFIC CONTROL PLAN
PHASE 1A

SCALE: 1" = 50' | SHEET 7 OF 9 SHEETS | STA. 1844+50.00 TO STA. 1874+00.00

F.A. RTE.	SECTION	COUNTY	TOTAL SHEETS	SHEET NO.
270	60B-1	MADISON	860	732
		CONTRACT NO. 76J90		
		ILLINOIS	FED. AID PROJECT	

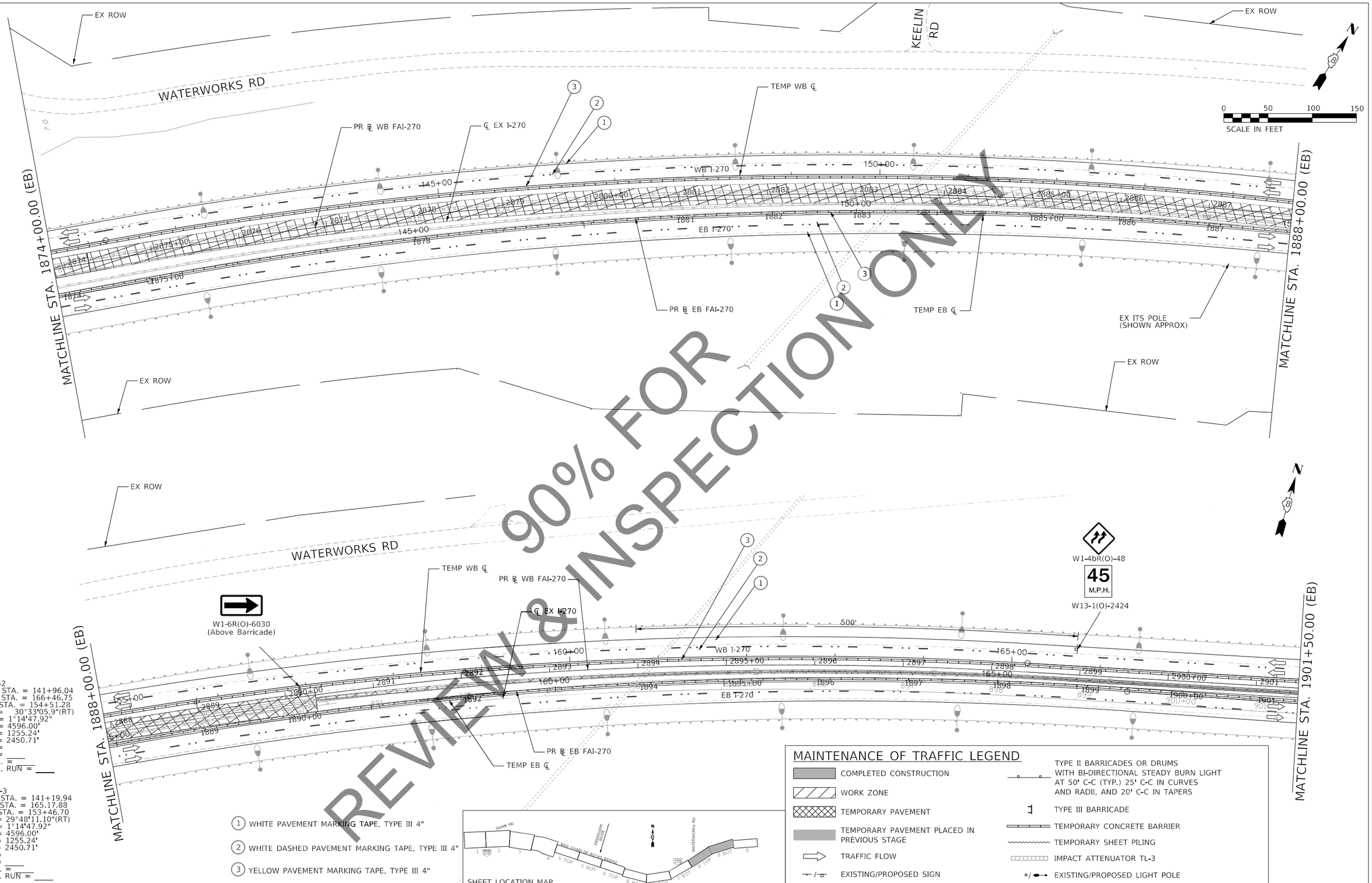

90% FOR REVIEW & INSPECTION ONLY

MODEL: Default
FILE NAME: C:\CS4PDF\9939\45086_T24\D6726\90-sht-mod-PH1A-08.dgn

HORNER & SHIFRIN
Teaming with: PARSONS

USER NAME = PWICS$	DESIGNED - RO	REVISED -	
	DRAWN - SQ	REVISED -	
PLOT SCALE = 50.0000 ' / in.	CHECKED - JB	REVISED -	
PLOT DATE = 11/12/2021	DATE - 2021/07/27	REVISED -	

STATE OF ILLINOIS
DEPARTMENT OF TRANSPORTATION

FAI 270 TRAFFIC CONTROL PLAN
PHASE 1A

SCALE: 1" = 50' | SHEET 8 OF 9 SHEETS | STA. 1874+00.00 TO STA. 1901+50.00

F.A. RTE.	SECTION	COUNTY	TOTAL SHEETS	SHEET NO.
270	60B-1	MADISON	860	748

CONTRACT NO. 76J90
ILLINOIS | FED. AID PROJECT

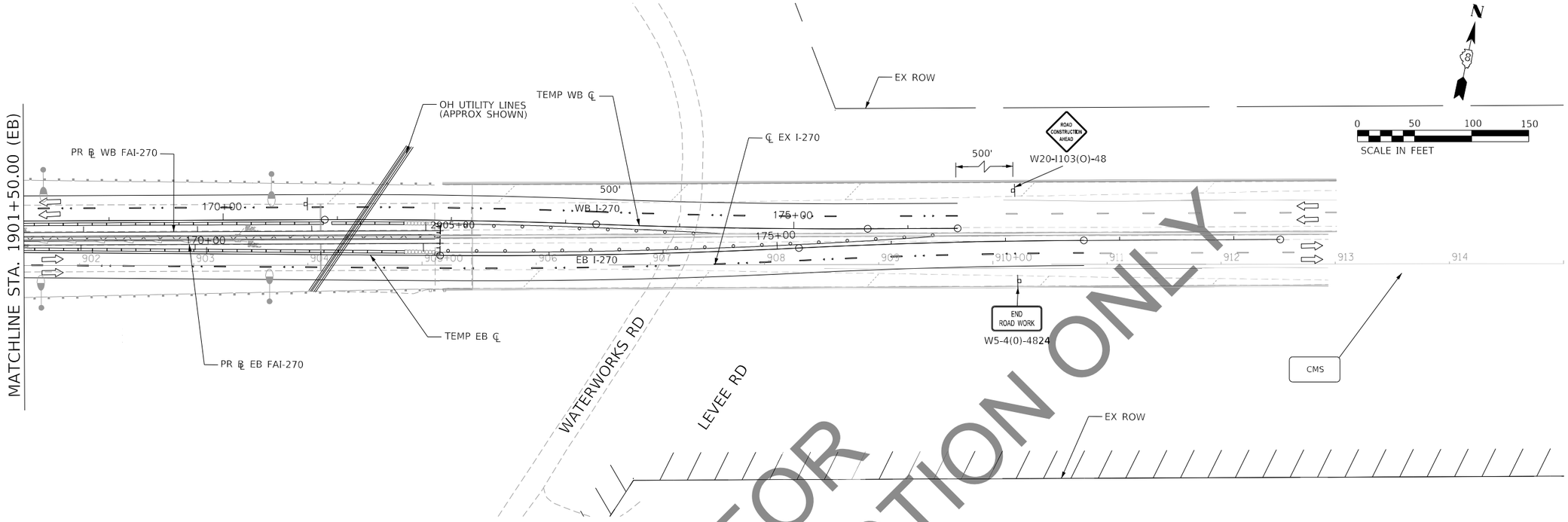

90% FOR REVIEW & INSPECTION ONLY

WB-3
PC STA. = 170+89.05
PRC STA. = 173+26.89
PI STA. = 173+61.86
Δ = 3°13'00.58"(LT)
D = 1°01'23.30"
R = 5,600.00'
T = 157.25'
L = 314.41'
E =
e = ____
T.R. = ____
S.E. RUN = ____

EB-4
PC STA. = 172+04.62
PRC STA. = 175+19.02
PI STA. = 176+43.88
Δ = 2°33'16.23"(RT)
D = 1°01'23.30"
R = 5,600.00'
T = 124.86'
L = 249.67'
E =
e = ____
T.R. = ____
S.E. RUN = ____

WB-4
PRC STA. = 173+26.89
PT STA. = 175+64.73
PI STA. = 172+07.99
Δ = 2°26'00.41"(RT)
D = 1°01'23.30"
R = 5,600.00'
T = 118.94'
L = 237.84'
E =
e = ____
T.R. = ____
S.E. RUN = ____

WB-5
PRC STA. = 175+19.02
PT STA. = 177+68.70
PI STA. = 174+45.83
Δ = 2°26'00.41"(LT)
D = 1°01'23.30"
R = 5,600.00'
T = 118.94'
L = 237.84'
E =
e = ____
T.R. = ____
S.E. RUN = ____

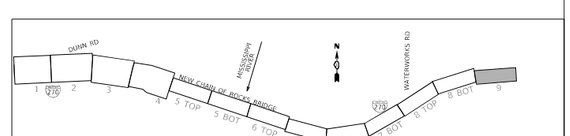

SHEET LOCATION MAP

MAINTENANCE OF TRAFFIC LEGEND

- COMPLETED CONSTRUCTION
- WORK ZONE
- TEMPORARY PAVEMENT
- TEMPORARY PAVEMENT PLACED IN PREVIOUS STAGE
- TRAFFIC FLOW
- EXISTING/PROPOSED SIGN
- TYPE II BARRICADES OR DRUMS WITH BI-DIRECTIONAL STEADY BURN LIGHT AT 50' C-C (TYP.) 25' C-C IN CURVES AND RADII, AND 20' C-C IN TAPERS
- TYPE III BARRICADE
- TEMPORARY CONCRETE BARRIER
- TEMPORARY SHEET PILING
- IMPACT ATTENUATOR TL-3
- EXISTING/PROPOSED LIGHT POLE

MODEL: Default
FILE NAME: C:\CS4PDF\99394\5086_125\D076\90-sht-mot-PH1A-09.dgn

HORNER & SHIFRIN
Teaming with: PARSONS

USER NAME = PWICS$	DESIGNED - RO	REVISED -	
	DRAWN - SQ	REVISED -	
PLOT SCALE = 50.0000 ' / in.	CHECKED - JB	REVISED -	
PLOT DATE = 11/12/2021	DATE - 2021/07/27	REVISED -	

STATE OF ILLINOIS
DEPARTMENT OF TRANSPORTATION

FAI 270 TRAFFIC CONTROL PLAN
PHASE 1A

SCALE: 1" = 50' | SHEET 9 OF 9 SHEETS | STA. 1901+50.00 TO STA.

F.A. RTE.	SECTION	COUNTY	TOTAL SHEETS	SHEET NO.
270	60B-1	MADISON	860	751

CONTRACT NO. 76J90

ILLINOIS | FED. AID PROJECT

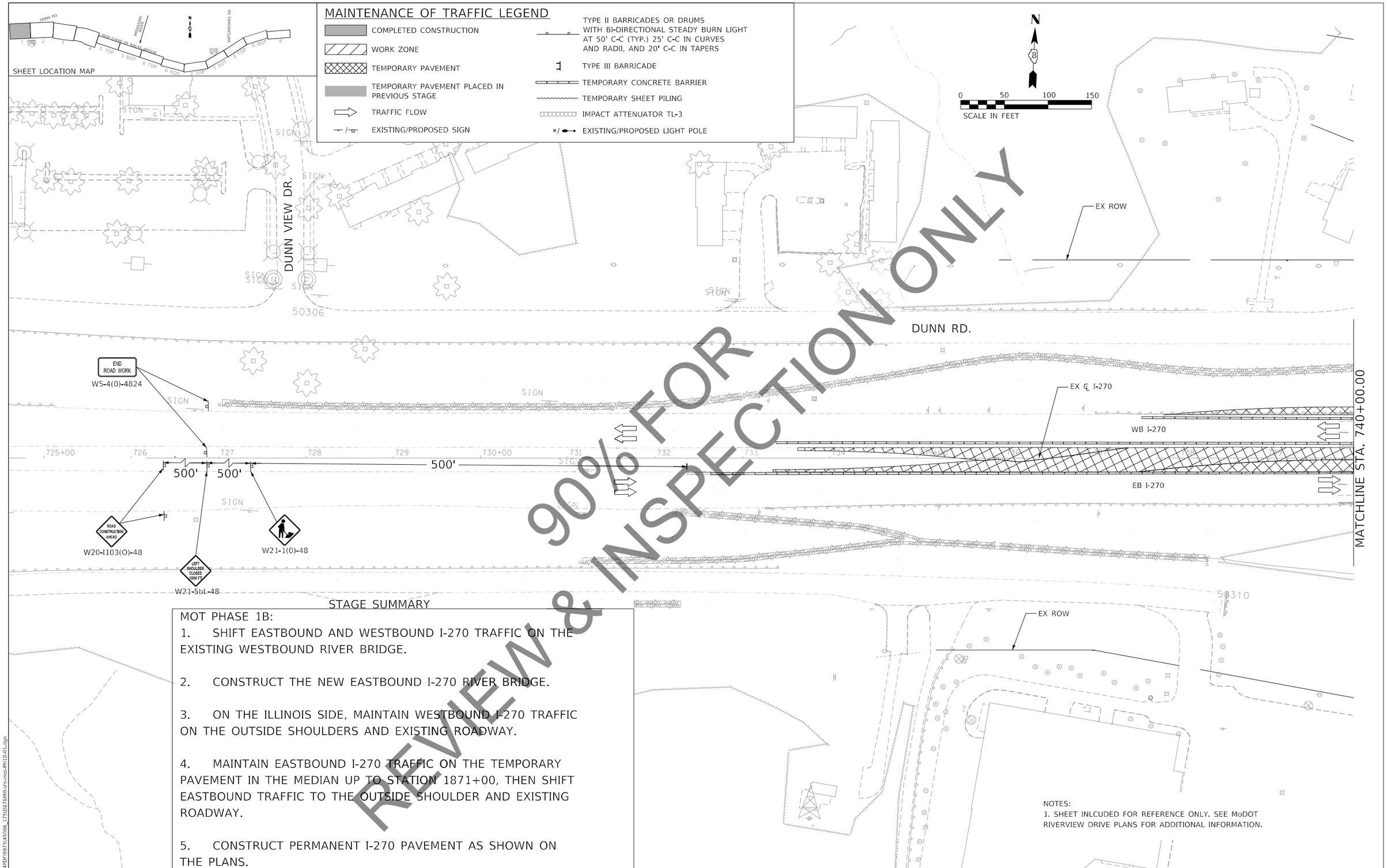

STAGE SUMMARY

MOT PHASE 1B:

1. SHIFT EASTBOUND AND WESTBOUND I-270 TRAFFIC ON THE EXISTING WESTBOUND RIVER BRIDGE.

2. CONSTRUCT THE NEW EASTBOUND I-270 RIVER BRIDGE.

3. ON THE ILLINOIS SIDE, MAINTAIN WESTBOUND I-270 TRAFFIC ON THE OUTSIDE SHOULDERS AND EXISTING ROADWAY.

4. MAINTAIN EASTBOUND I-270 TRAFFIC ON THE TEMPORARY PAVEMENT IN THE MEDIAN UP TO STATION 1871+00, THEN SHIFT EASTBOUND TRAFFIC TO THE OUTSIDE SHOULDER AND EXISTING ROADWAY.

5. CONSTRUCT PERMANENT I-270 PAVEMENT AS SHOWN ON THE PLANS.

NOTES:
1. SHEET INLCUDED FOR REFERENCE ONLY. SEE MoDOT RIVERVIEW DRIVE PLANS FOR ADDITIONAL INFORMATION.

MODEL: Default
FILE NAME: C:\CS4PDF\99759\45086_175\D876J90-pm-mot-PH1B-01.dgn

HORNER & SHIFRIN
Teaming with: PARSONS

USER NAME = PWICS$	DESIGNED -	REVISED -
	DRAWN -	REVISED -
PLOT SCALE = 50.0000 ' / in.	CHECKED -	REVISED -
PLOT DATE = 11/17/2021	DATE -	REVISED -

STATE OF ILLINOIS
DEPARTMENT OF TRANSPORTATION

FAI 270 TRAFFIC CONTROL PLAN
PHASE 1B

SCALE: 1" = 50' | SHEET 1 OF 9 SHEETS | STA. TO STA. 740+00

F.A. RTE.	SECTION	COUNTY	TOTAL SHEETS	SHEET NO.
270	60B-1	MADISON	860	766

CONTRACT NO. 76J90

ILLINOIS | FED. AID PROJECT

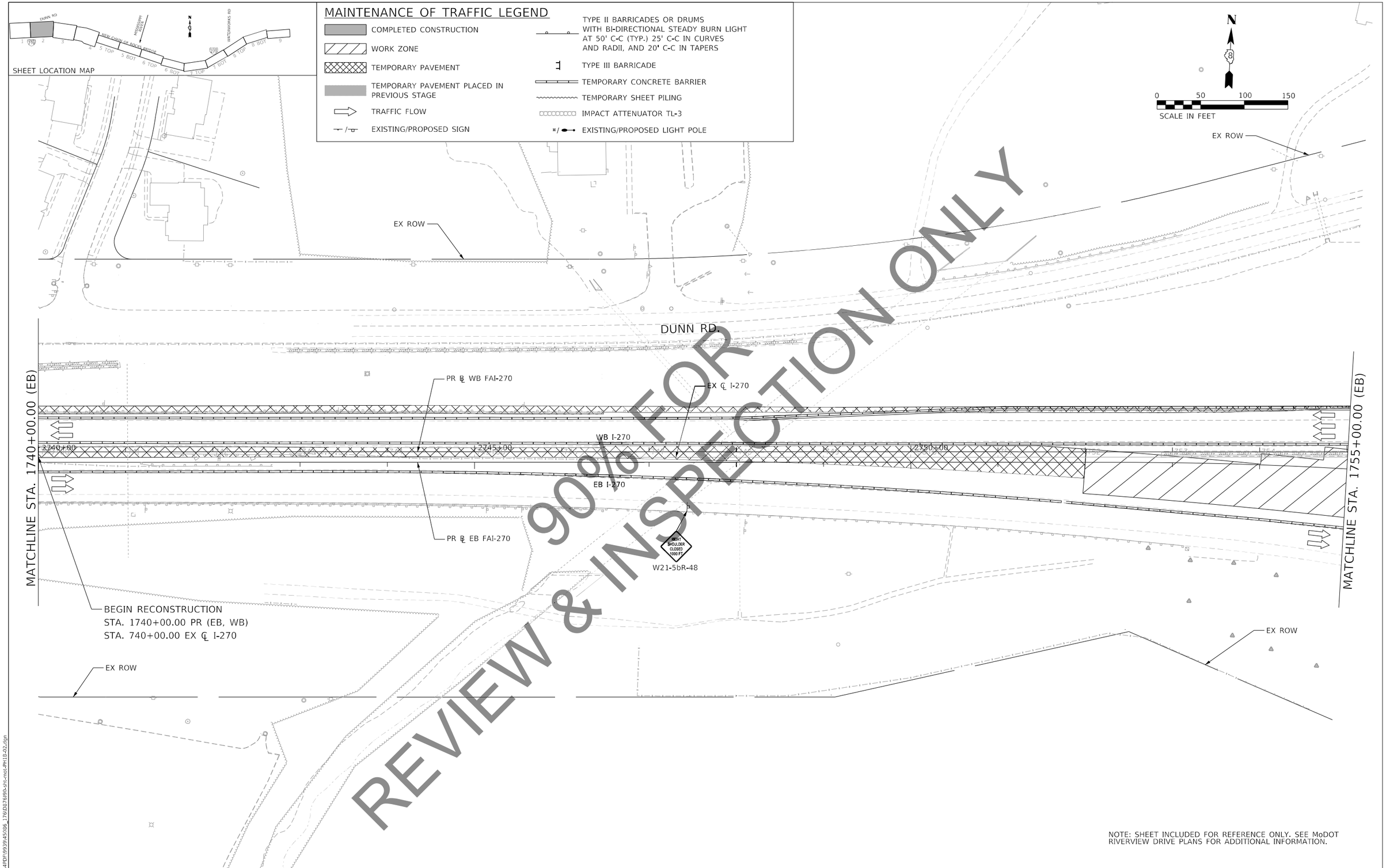

NOTE: SHEET INCLUDED FOR REFERENCE ONLY. SEE MoDOT RIVERVIEW DRIVE PLANS FOR ADDITIONAL INFORMATION.

MODEL: Default
FILE NAME: C:\ICS4\PDF\09339\45086_176\D676190-sht-mot-PH1B-02.dgn

HORNER & SHIFRIN / Teaming with: PARSONS	USER NAME = PWICS$	DESIGNED -	REVISED -
		DRAWN -	REVISED -
	PLOT SCALE = 50.0000 ' / in.	CHECKED -	REVISED -
	PLOT DATE = 11/12/2021	DATE -	REVISED -

STATE OF ILLINOIS
DEPARTMENT OF TRANSPORTATION

FAI 270 TRAFFIC CONTROL PLAN
PHASE 1B

SCALE: 1" = 50' | SHEET 2 OF 9 SHEETS | STA. 1740+00.00 TO STA. 1755+00.00

F.A. RTE.	SECTION	COUNTY	TOTAL SHEETS	SHEET NO.
270	60B-1	MADISON	860	707
		CONTRACT NO. 76J90		
		ILLINOIS	FED. AID PROJECT	

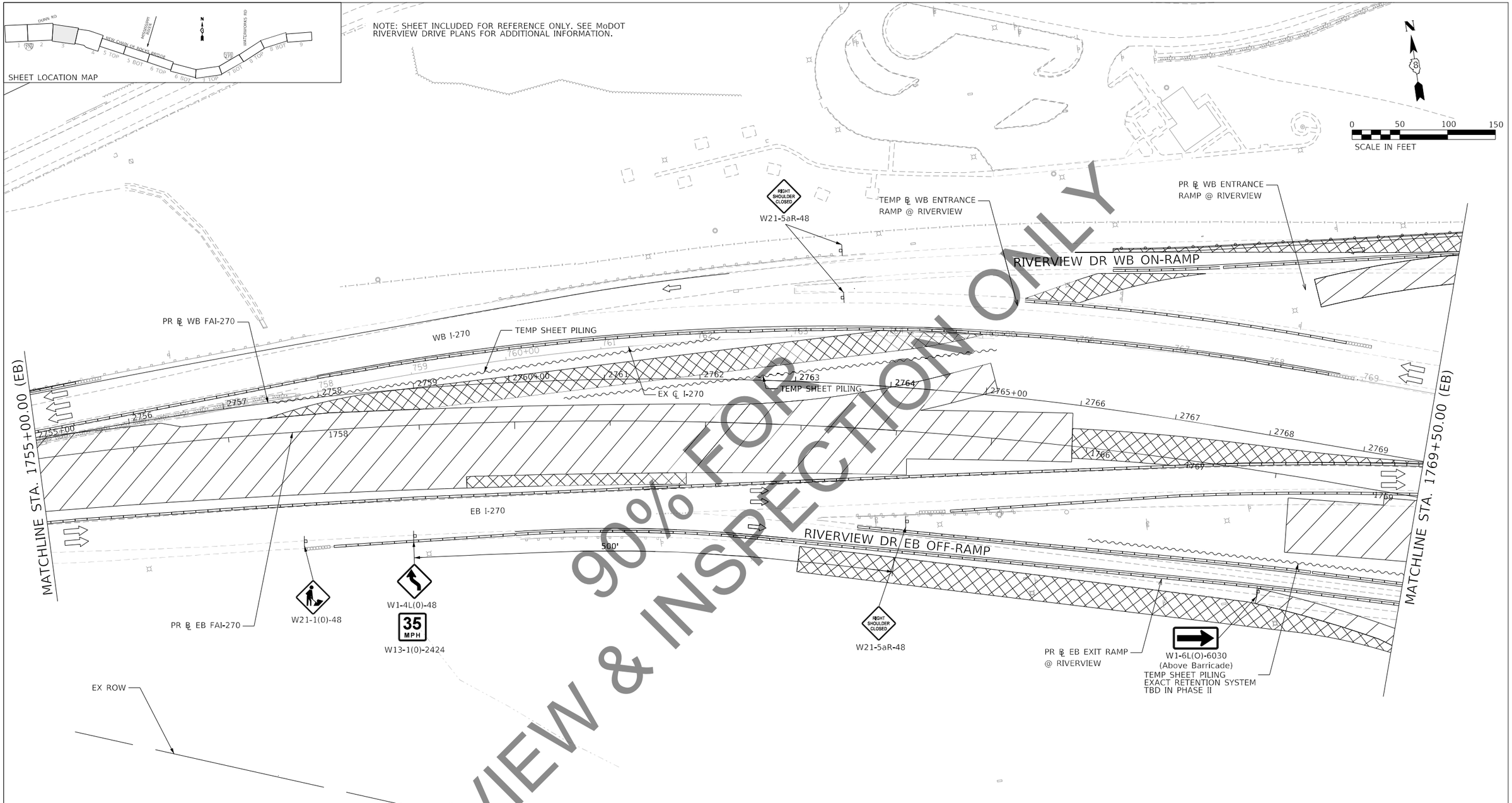

MAINTENANCE OF TRAFFIC LEGEND

- COMPLETED CONSTRUCTION
- WORK ZONE
- TEMPORARY PAVEMENT
- TEMPORARY PAVEMENT PLACED IN PREVIOUS STAGE
- TRAFFIC FLOW
- EXISTING/PROPOSED SIGN
- TYPE II BARRICADES OR DRUMS WITH BI-DIRECTIONAL STEADY BURN LIGHT AT 50' C-C (TYP.) 25' C-C IN CURVES AND RADII, AND 20' C-C IN TAPERS
- TYPE III BARRICADE
- TEMPORARY CONCRETE BARRIER
- TEMPORARY SHEET PILING
- IMPACT ATTENUATOR TL-3
- EXISTING/PROPOSED LIGHT POLE

MODEL: Default
FILE NAME: C:\ICS4PDF\9939\45086_31\D876790-sht-omp-PH1B-03.dgn

HORNER & SHIFRIN
Teaming with: PARSONS

USER NAME = PWICS$	DESIGNED - RO	REVISED -
	DRAWN - SQ	REVISED -
PLOT SCALE = 50.0000 ' / in.	CHECKED - JB	REVISED -
PLOT DATE = 11/12/2021	DATE - 2021/07/27	REVISED -

STATE OF ILLINOIS
DEPARTMENT OF TRANSPORTATION

FAI 270 TRAFFIC CONTROL PLAN
PHASE 1B

SCALE: 1" = 50' | SHEET 3 OF 9 SHEETS | STA. 1755+00.00 TO STA. 1769+50.00

F.A. RTE.	SECTION	COUNTY	TOTAL SHEETS	SHEET NO.
270	60B-1	MADISON	860	7B

CONTRACT NO. 76J90

ILLINOIS | FED. AID PROJECT

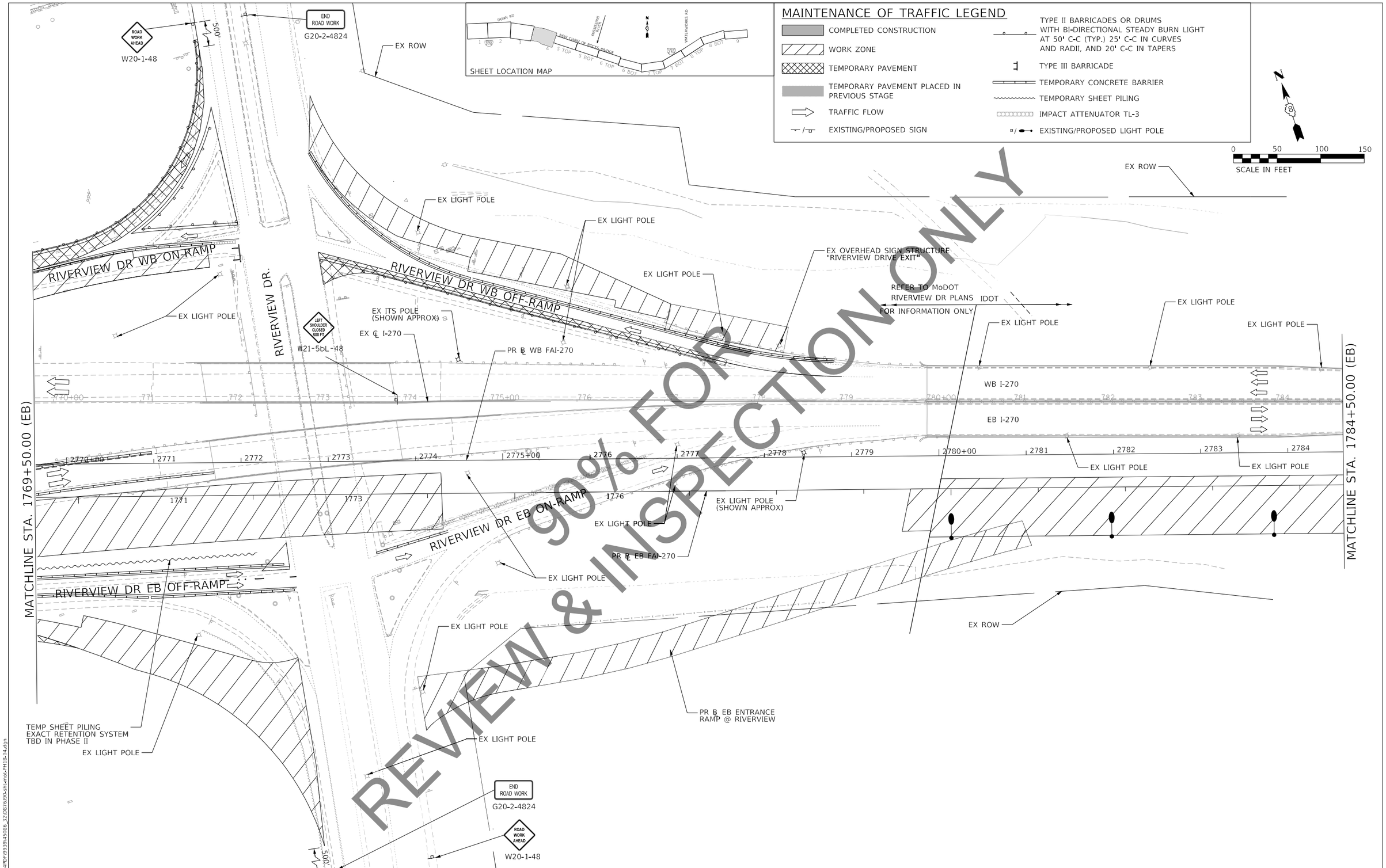

HORNER & SHIFRIN Teaming with: PARSONS	USER NAME = PWICS$	DESIGNED - RO	REVISED -
		DRAWN - SQ	REVISED -
	PLOT SCALE = 50.0000 ' / in.	CHECKED - JB	REVISED -
	PLOT DATE = 11/12/2021	DATE - 2021/07/27	REVISED -

STATE OF ILLINOIS
DEPARTMENT OF TRANSPORTATION

FAI 270 TRAFFIC CONTROL PLAN
PHASE 1B

SCALE: 1" = 50' | SHEET 4 OF 9 SHEETS | STA. 1769+50.00 TO STA. 1784+50.00

F.A. RTE.	SECTION	COUNTY	TOTAL SHEETS	SHEET NO.
270	60B-1	MADISON	860	79

CONTRACT NO. 76J90

ILLINOIS | FED. AID PROJECT

MODEL: Default
FILE NAME: C:\CS4PDF\99390\45086_22\D676J90-sht-mot-PH1B-14.dgn

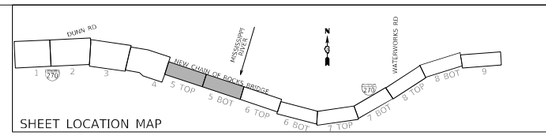

SHEET LOCATION MAP

MAINTENANCE OF TRAFFIC LEGEND

- COMPLETED CONSTRUCTION
- WORK ZONE
- TEMPORARY PAVEMENT
- TEMPORARY PAVEMENT PLACED IN PREVIOUS STAGE
- TRAFFIC FLOW
- EXISTING/PROPOSED SIGN
- TYPE II BARRICADES OR DRUMS WITH BI-DIRECTIONAL STEADY BURN LIGHT AT 50' C-C (TYP.) 25' C-C IN CURVES AND RADII, AND 20' C-C IN TAPERS
- TYPE III BARRICADE
- TEMPORARY CONCRETE BARRIER
- TEMPORARY SHEET PILING
- IMPACT ATTENUATOR TL-3
- EXISTING/PROPOSED LIGHT POLE

N

0 50 100 150

SCALE IN FEET

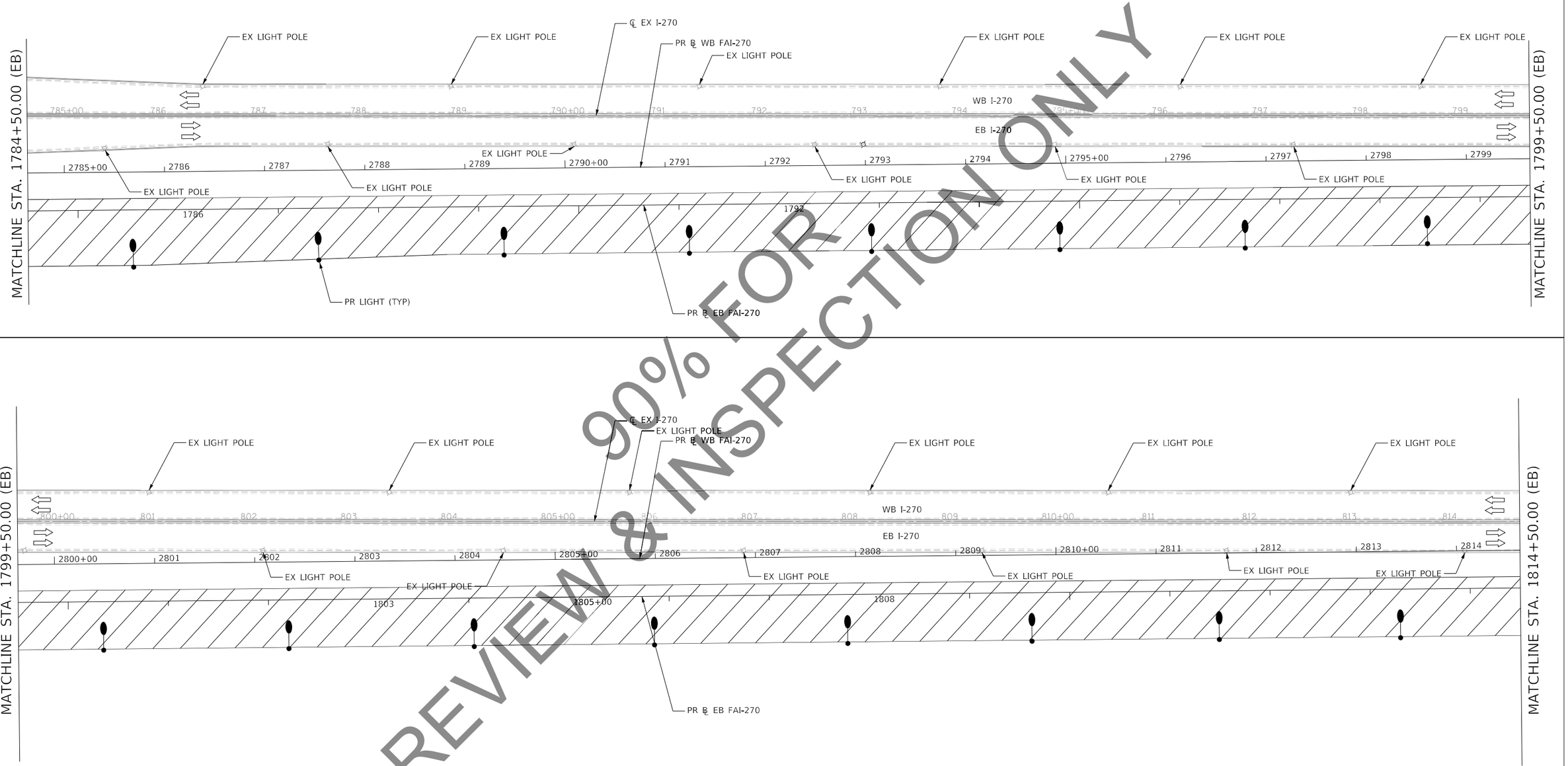

90% FOR REVIEW & INSPECTION ONLY

MODEL: Default
FILE NAME: C:\CS4PDF\99390\45086_23\D876J9\h-pn-mot-PH1B-05.dgn

HORNER & SHIFRIN Teaming with: PARSONS	USER NAME = PWICS$	DESIGNED - RO	REVISED -	STATE OF ILLINOIS DEPARTMENT OF TRANSPORTATION	**FAI 270 TRAFFIC CONTROL PLAN PHASE 1B**	F.A. RTE.	SECTION	COUNTY	TOTAL SHEETS / SHEET NO.
		DRAWN - SQ	REVISED -			270	60B-1	MADISON	860 / 800
	PLOT SCALE = 50.0000 ' / in.	CHECKED - JB	REVISED -					CONTRACT NO. 76J90	
	PLOT DATE = 11/12/2021	DATE - 2021/07/27	REVISED -		SCALE: 1" = 50' SHEET 5 OF 9 SHEETS STA. 1784+50.00 TO STA. 1814+50.00			ILLINOIS FED. AID PROJECT	

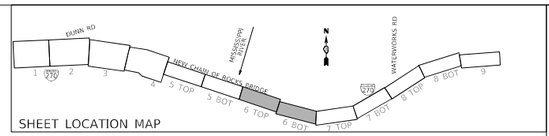

MAINTENANCE OF TRAFFIC LEGEND

- COMPLETED CONSTRUCTION
- WORK ZONE
- TEMPORARY PAVEMENT
- TEMPORARY PAVEMENT PLACED IN PREVIOUS STAGE
- TRAFFIC FLOW
- EXISTING/PROPOSED SIGN
- TYPE II BARRICADES OR DRUMS WITH BI-DIRECTIONAL STEADY BURN LIGHT AT 50' C-C (TYP.) 25' C-C IN CURVES AND RADII, AND 20' C-C IN TAPERS
- TYPE III BARRICADE
- TEMPORARY CONCRETE BARRIER
- TEMPORARY SHEET PILING
- IMPACT ATTENUATOR TL-3
- EXISTING/PROPOSED LIGHT POLE

1. WHITE PAVEMENT MARKING TAPE, TYPE III 4"
2. WHITE DASHED PAVEMENT MARKING TAPE, TYPE III 4"
3. YELLOW PAVEMENT MARKING TAPE, TYPE III 4"

0 50 100 150
SCALE IN FEET

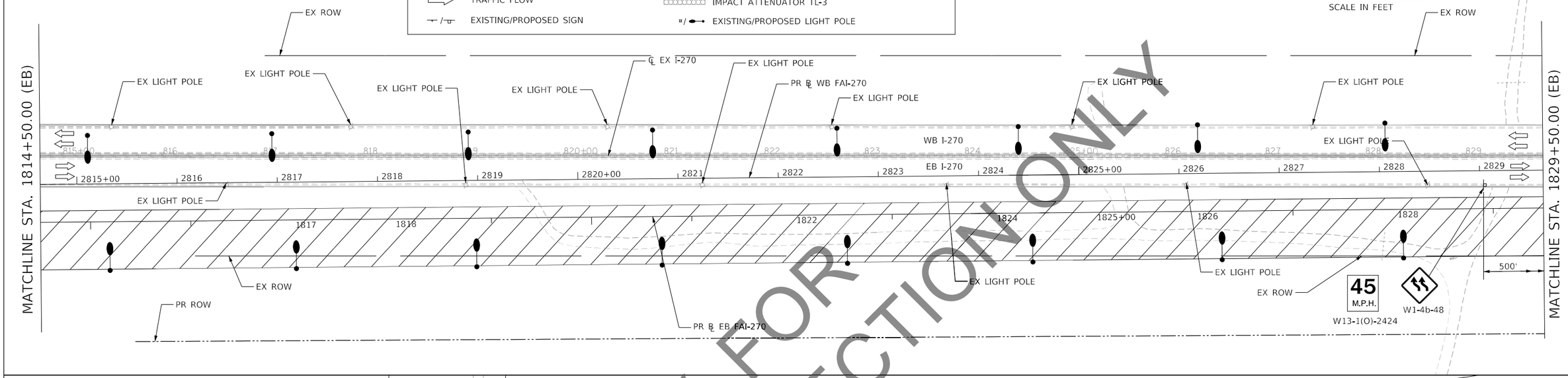

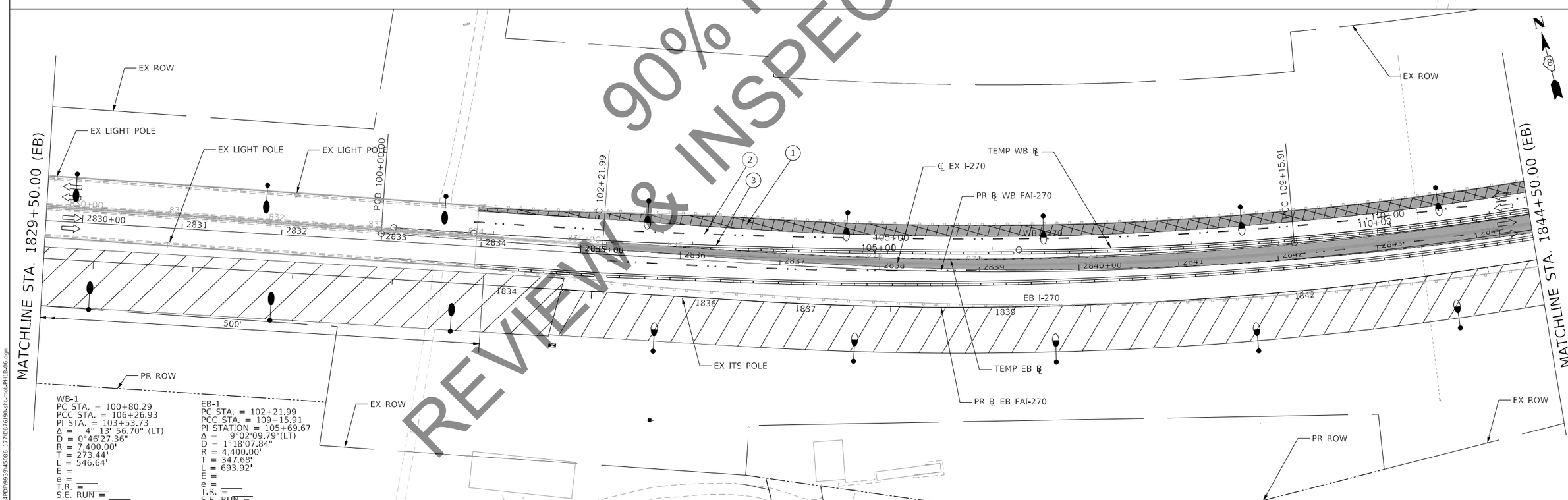

WB-1
PC STA. = 100+80.29
PCC STA. = 106+26.93
PI STA. = 103+53.73
Δ = 4° 13' 56.70" (LT)
D = 0°46'27.36"
R = 7,400.00'
T = 273.44'
L = 546.64'
E =
e = ____
T.R. = ____
S.E. RUN = ____

EB-1
PC STA. = 102+21.99
PCC STA. = 109+15.91
PI STATION = 105+69.67
Δ = 9°02'09.79"(LT)
D = 1°18'07.84"
R = 4,400.00'
T = 347.68'
L = 693.92'
E =
e = ____
T.R. = ____
S.E. RUN = ____

90% FOR REVIEW & INSPECTION ONLY

MODEL: Default
FILE NAME: C:\CS4PDF\99394\5086_1770\D76\90-ph-mot-PH1B-06.dgn

HORNER & SHIFRIN
Teaming with: PARSONS

USER NAME = PWICS$	DESIGNED -	REVISED -	
	DRAWN -	REVISED -	
PLOT SCALE = 50.0000 ' / in.	CHECKED -	REVISED -	
PLOT DATE = 11/12/2021	DATE -	REVISED -	

STATE OF ILLINOIS
DEPARTMENT OF TRANSPORTATION

FAI 270 TRAFFIC CONTROL PLAN
PHASE 1B

SCALE: 1" = 50' | SHEET 6 OF 9 SHEETS | STA. 1814+50.00 TO STA. 1844+50.00

F.A. RTE.	SECTION	COUNTY	TOTAL SHEETS	SHEET NO.
270	60B-1	MADISON	860	811
		CONTRACT NO. 76J90		
		ILLINOIS	FED. AID PROJECT	

EB-2
PCC STA. = 109+15.91
PRC STA. = 134+65.34
PI STA. = 122+54.55
Δ = 43°09'55.62"(LT)
D = 1°41'35.30"
R = 3,384.00'
T = 1,338.64'
L = 2,549.44'
E =
e = ____
T.R. = ____
S.E. RUN = ____

WB-2
PCC STA. = 106+26.93
PT STA. = 134+29.03
PI STA. = 121+14.26
Δ = 47° 31' 39" (LT)
D = 1°41'46.12"
R = 3,378.00'
T = 1,487.33'
L = 2,802.10'
E =
e = ____
T.R. = ____
S.E. RUN = ____

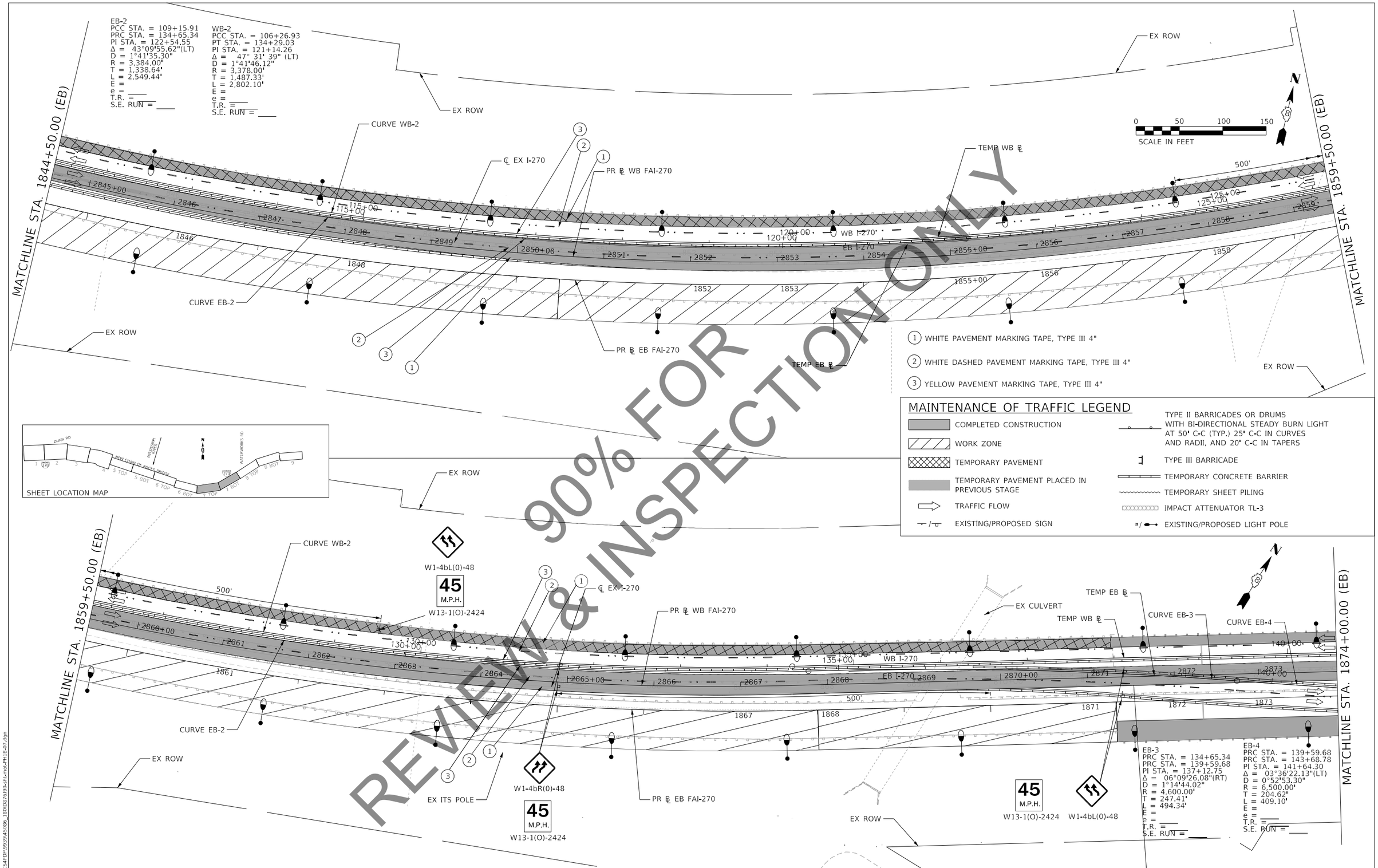

MAINTENANCE OF TRAFFIC LEGEND

- COMPLETED CONSTRUCTION
- WORK ZONE
- TEMPORARY PAVEMENT
- TEMPORARY PAVEMENT PLACED IN PREVIOUS STAGE
- TRAFFIC FLOW
- EXISTING/PROPOSED SIGN
- TYPE II BARRICADES OR DRUMS WITH BI-DIRECTIONAL STEADY BURN LIGHT AT 50' C-C (TYP.) 25' C-C IN CURVES AND RADII, AND 20' C-C IN TAPERS
- TYPE III BARRICADE
- TEMPORARY CONCRETE BARRIER
- TEMPORARY SHEET PILING
- IMPACT ATTENUATOR TL-3
- EXISTING/PROPOSED LIGHT POLE

90% FOR REVIEW & INSPECTION ONLY

MODEL: Default
FILE NAME: C:\ICS4PDF\99390\45086_180\D876\90-sht-mot-PH1B-07.dgn

HORNER & SHIFRIN / Teaming with: PARSONS	USER NAME = PWICS$	DESIGNED -	REVISED -
		DRAWN -	REVISED -
	PLOT SCALE = 50.0000 ' / in.	CHECKED -	REVISED -
	PLOT DATE = 11/12/2021	DATE -	REVISED -

STATE OF ILLINOIS
DEPARTMENT OF TRANSPORTATION

FAI 270 TRAFFIC CONTROL PLAN
PHASE 1B

SCALE: 1" = 50' | SHEET 7 OF 9 SHEETS | STA. 1844+50.00 TO STA. 1874+00.00

F.A. RTE.	SECTION	COUNTY	TOTAL SHEETS	SHEET NO.
270	60B-1	MADISON	860	822

CONTRACT NO. 76J90
ILLINOIS | FED. AID PROJECT

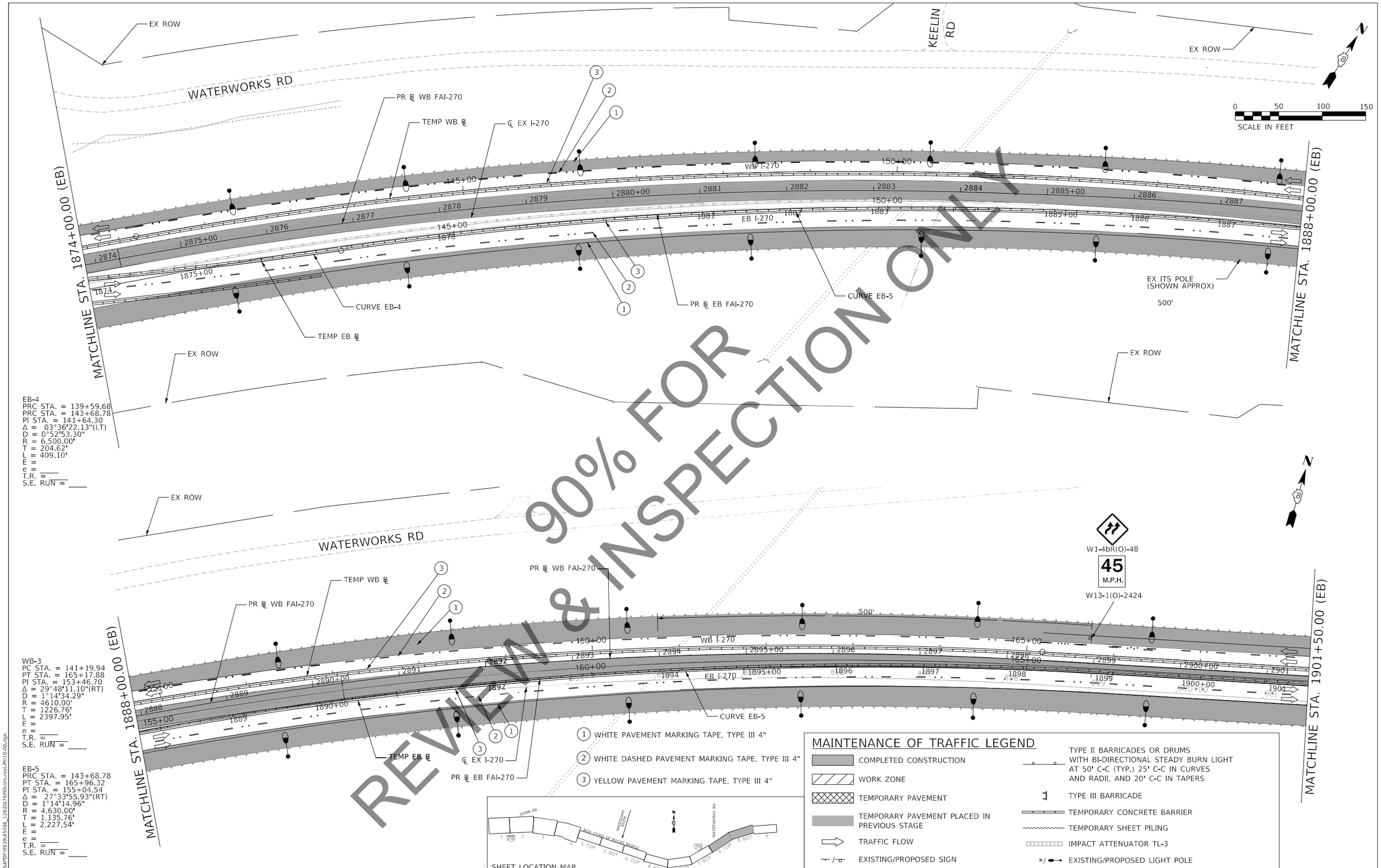

EB-4
PRC STA. = 139+59.68
PRC STA. = 143+68.78
PI STA. = 141+64.30
Δ = 03°36'22.13"(LT)
D = 0°52'53.30"
R = 6,500.00'
T = 204.62'
L = 409.10'
E = ____
e = ____
T.R. = ____
S.E. RUN = ____

WB-3
PC STA. = 141+19.94
PT STA. = 165+17.88
PI STA. = 153+46.70
Δ = 29°48'11.10"(RT)
D = 1°14'34.29"
R = 4610.00'
T = 1226.76'
L = 2397.95'
E = ____
e = ____
T.R. = ____
S.E. RUN = ____

EB-5
PRC STA. = 143+68.78
PT STA. = 165+96.32
PI STA. = 155+04.54
Δ = 27°33'55.93"(RT)
D = 1°14'14.96"
R = 4,630.00'
T = 1,135.76'
L = 2,227.54'
E = ____
e = ____
T.R. = ____
S.E. RUN = ____

90% FOR REVIEW & INSPECTION ONLY

MODEL: Default
FILE NAME: C:\CS4PDF\9939\45086_126\D876\90-pH-mot-PH1B-08.dgn

HORNER & SHIFRIN
Teaming with: PARSONS

USER NAME = PWICS$	DESIGNED - RO	REVISED -	
	DRAWN - SQ	REVISED -	
PLOT SCALE = 50.0000 ' / in.	CHECKED - JB	REVISED -	
PLOT DATE = 11/12/2021	DATE - 2021/07/27	REVISED -	

STATE OF ILLINOIS
DEPARTMENT OF TRANSPORTATION

FAI 270 TRAFFIC CONTROL PLAN
PHASE 1B

SCALE: 1" = 50' | SHEET 8 OF 9 SHEETS | STA. 1874+00.00 TO STA. 1901+50.00

F.A. RTE.	SECTION	COUNTY	TOTAL SHEETS	SHEET NO.
270	60B-1	MADISON	860	838
		CONTRACT NO. 76J90		
		ILLINOIS FED. AID PROJECT		

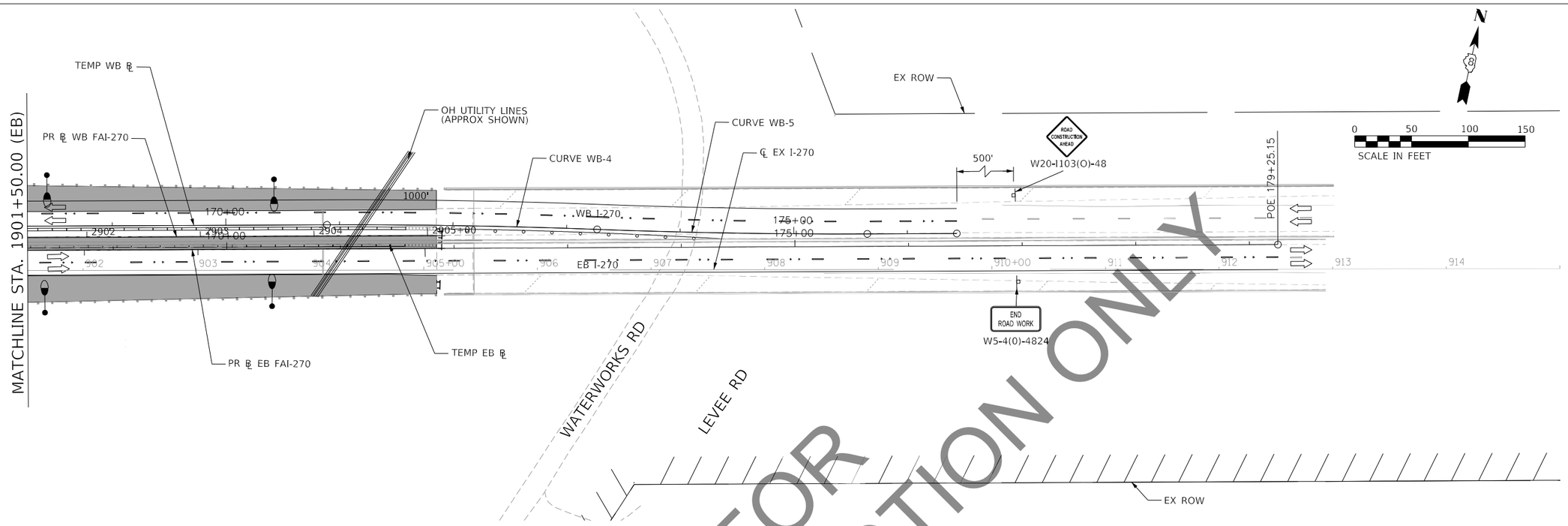

90% FOR REVIEW & INSPECTION ONLY

WB-4
PC STA. = 170+89.05
PRC STA. = 173+26.89
PI STA. = 172+07.99
Δ = 2°26'00.41"(RT)
D = 1°01'23.30"
R = 5,600.00'
T = 118.94'
L = 237.84'
E =
e = ____
T.R. = ____
S.E. RUN = ____

WB-5
PRC STA. = 172+26.89
PT STA. = 175+64.73
PI STA. = 174+45.83
Δ = 2°26'00.41"(LT)
D = 1°01'23.30"
R = 5,600.00'
T = 118.94'
L = 237.84'
E =
e = ____
T.R. = ____
S.E. RUN = ____

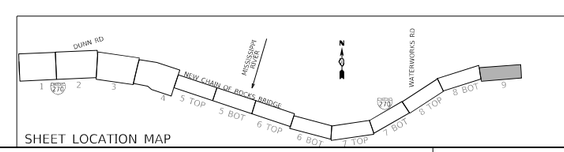

SHEET LOCATION MAP

MAINTENANCE OF TRAFFIC LEGEND

- COMPLETED CONSTRUCTION
- WORK ZONE
- TEMPORARY PAVEMENT
- TEMPORARY PAVEMENT PLACED IN PREVIOUS STAGE
- TRAFFIC FLOW
- EXISTING/PROPOSED SIGN
- TYPE II BARRICADES OR DRUMS WITH BI-DIRECTIONAL STEADY BURN LIGHT AT 50' C-C (TYP.) 25' C-C IN CURVES AND RADII, AND 20' C-C IN TAPERS
- TYPE III BARRICADE
- TEMPORARY CONCRETE BARRIER
- TEMPORARY SHEET PILING
- IMPACT ATTENUATOR TL-3
- EXISTING/PROPOSED LIGHT POLE

MODEL: Default
FILE NAME: C:\CS4PDF\99394\5086_127\D876\90-sht-mot-PH1B-09.dgn

HORNER & SHIFRIN
Teaming with: PARSONS

USER NAME = PWICS$	DESIGNED - RO	REVISED -	
	DRAWN - SQ	REVISED -	
PLOT SCALE = 50.0000 ' / in.	CHECKED - JB	REVISED -	
PLOT DATE = 11/12/2021	DATE - 2021/07/27	REVISED -	

STATE OF ILLINOIS
DEPARTMENT OF TRANSPORTATION

FAI 270 TRAFFIC CONTROL PLAN
PHASE 1B

SCALE: 1" = 50' | SHEET 9 OF 9 SHEETS | STA. 1901+50.00 TO STA.

F.A. RTE.	SECTION	COUNTY	TOTAL SHEETS	SHEET NO.
270	60B-1	MADISON	860	844

CONTRACT NO. 76J90

ILLINOIS | FED. AID PROJECT

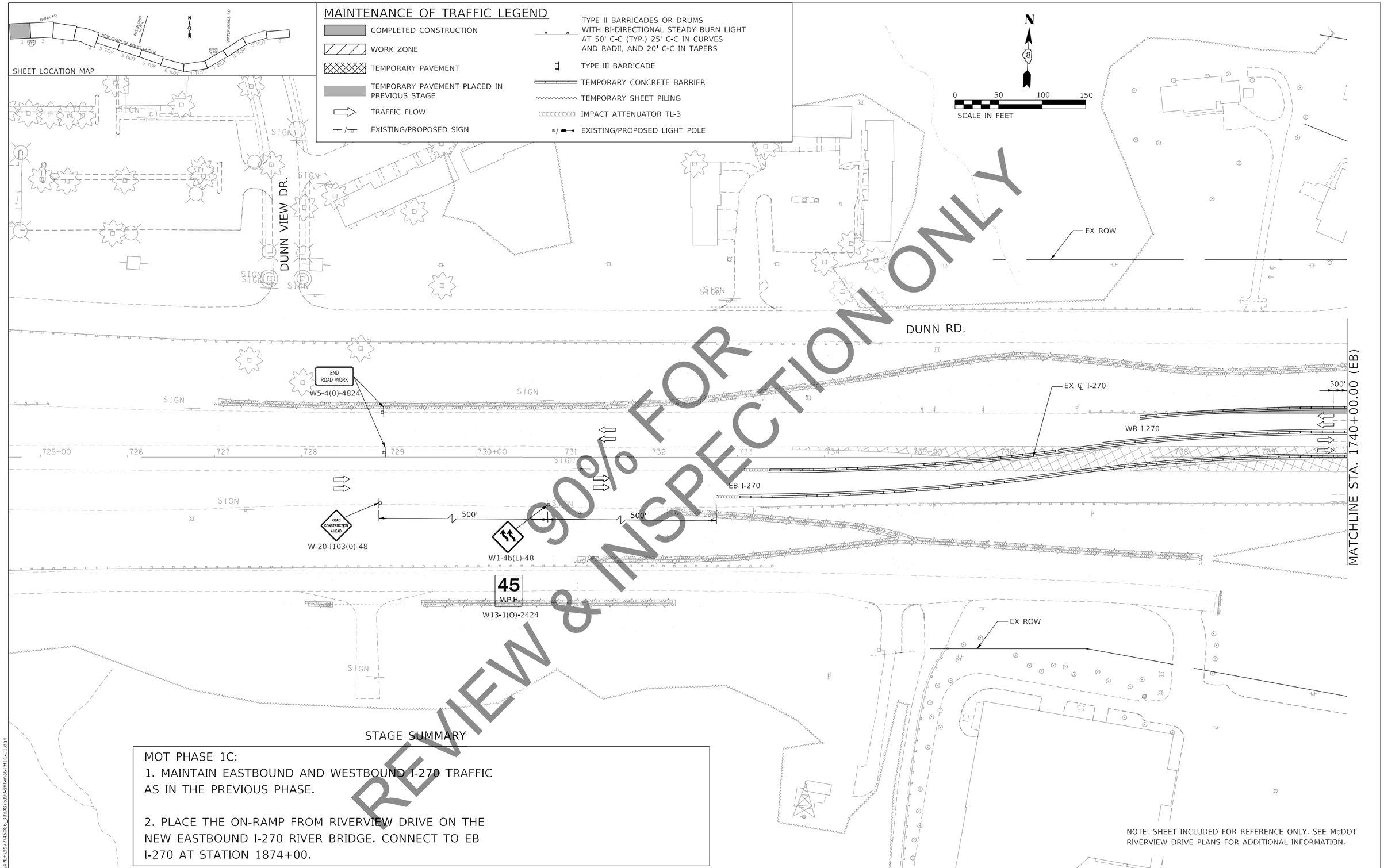

STAGE SUMMARY

MOT PHASE 1C:

1. MAINTAIN EASTBOUND AND WESTBOUND I-270 TRAFFIC AS IN THE PREVIOUS PHASE.

2. PLACE THE ON-RAMP FROM RIVERVIEW DRIVE ON THE NEW EASTBOUND I-270 RIVER BRIDGE. CONNECT TO EB I-270 AT STATION 1874+00.

NOTE: SHEET INCLUDED FOR REFERENCE ONLY. SEE MoDOT RIVERVIEW DRIVE PLANS FOR ADDITIONAL INFORMATION.

MODEL: Default
FILE NAME: C:\CS4PDF\9977\45086-39\D876J90-int-mot-PH1C-01.dgn

HORNER SHIFRIN / Teaming with: PARSONS	USER NAME = PWICS$	DESIGNED - RO	REVISED -
		DRAWN - SQ	REVISED -
	PLOT SCALE = 50.0000 ' / in.	CHECKED - JB	REVISED -
	PLOT DATE = 11/17/2021	DATE - 2021/07/27	REVISED -

STATE OF ILLINOIS
DEPARTMENT OF TRANSPORTATION

FAI 270 TRAFFIC CONTROL PLAN
PHASE 1C

SCALE: 1" = 50' | SHEET 1 OF 9 SHEETS | STA. TO STA. 1740+00.00

F.A. RTE.	SECTION	COUNTY	TOTAL SHEETS	SHEET NO.
270	60B-1	MADISON	860	85

CONTRACT NO. 76J90

ILLINOIS | FED. AID PROJECT

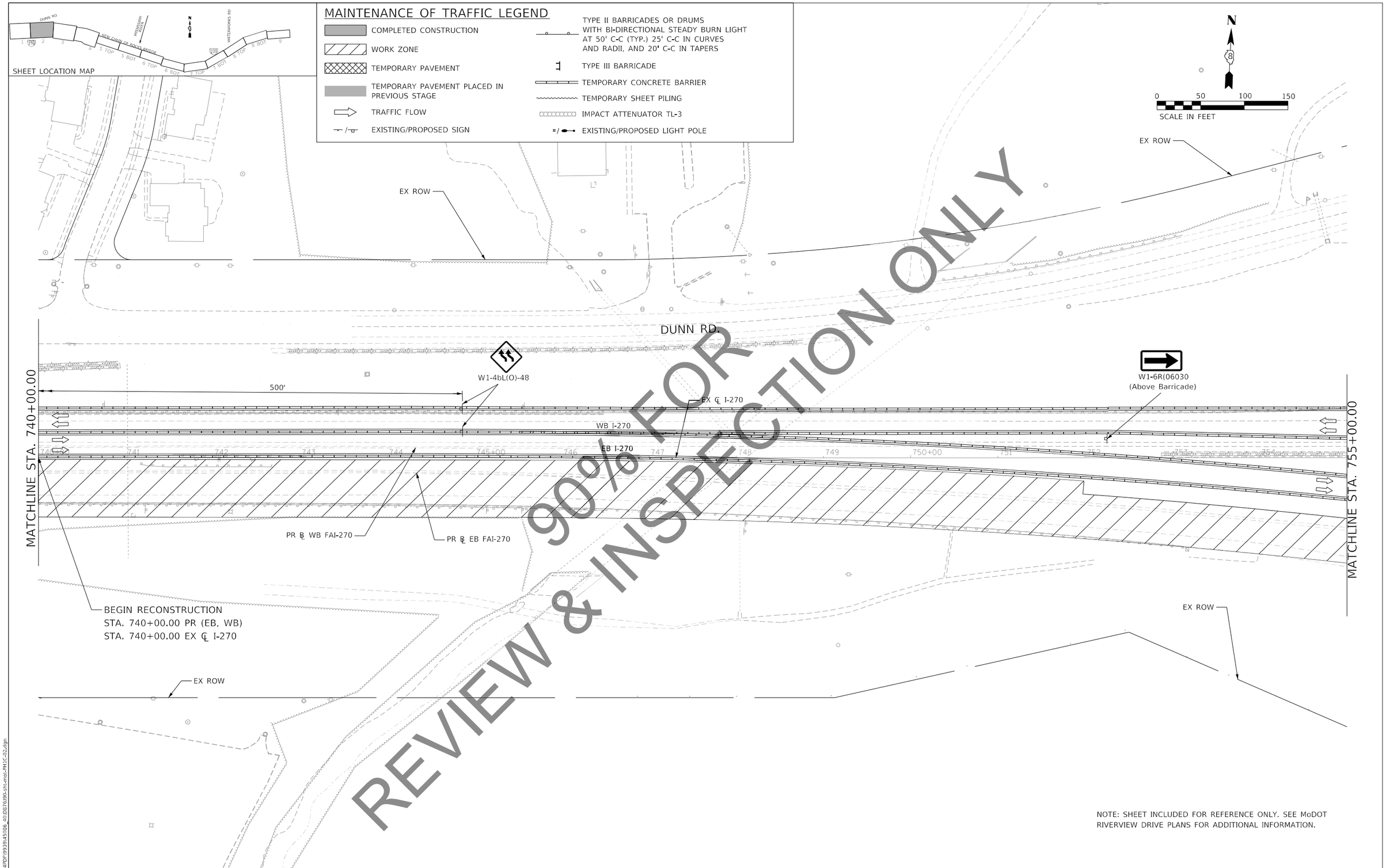

NOTE: SHEET INCLUDED FOR REFERENCE ONLY. SEE MoDOT RIVERVIEW DRIVE PLANS FOR ADDITIONAL INFORMATION.

MODEL: Default
FILE NAME: C:\ICS4PDF\9939\45086_40\D8761Ph-sh-mot-PH1C-02.dgn

HORNER & SHIFRIN / Teaming with: PARSONS	USER NAME = PWICS$	DESIGNED - RO	REVISED -
		DRAWN - SQ	REVISED -
	PLOT SCALE = 50.0000 ' / in.	CHECKED - JB	REVISED -
	PLOT DATE = 11/12/2021	DATE - 2021/07/27	REVISED -

STATE OF ILLINOIS
DEPARTMENT OF TRANSPORTATION

FAI 270 TRAFFIC CONTROL PLAN
PHASE 1C

SCALE: 1" = 50' | SHEET 2 OF 9 SHEETS | STA. 740+00.00 TO STA. 755+00.00

F.A. RTE.	SECTION	COUNTY	TOTAL SHEETS	SHEET NO.
270	60B-1	MADISON	860	857
		CONTRACT NO. 76J90		
		ILLINOIS	FED. AID PROJECT	

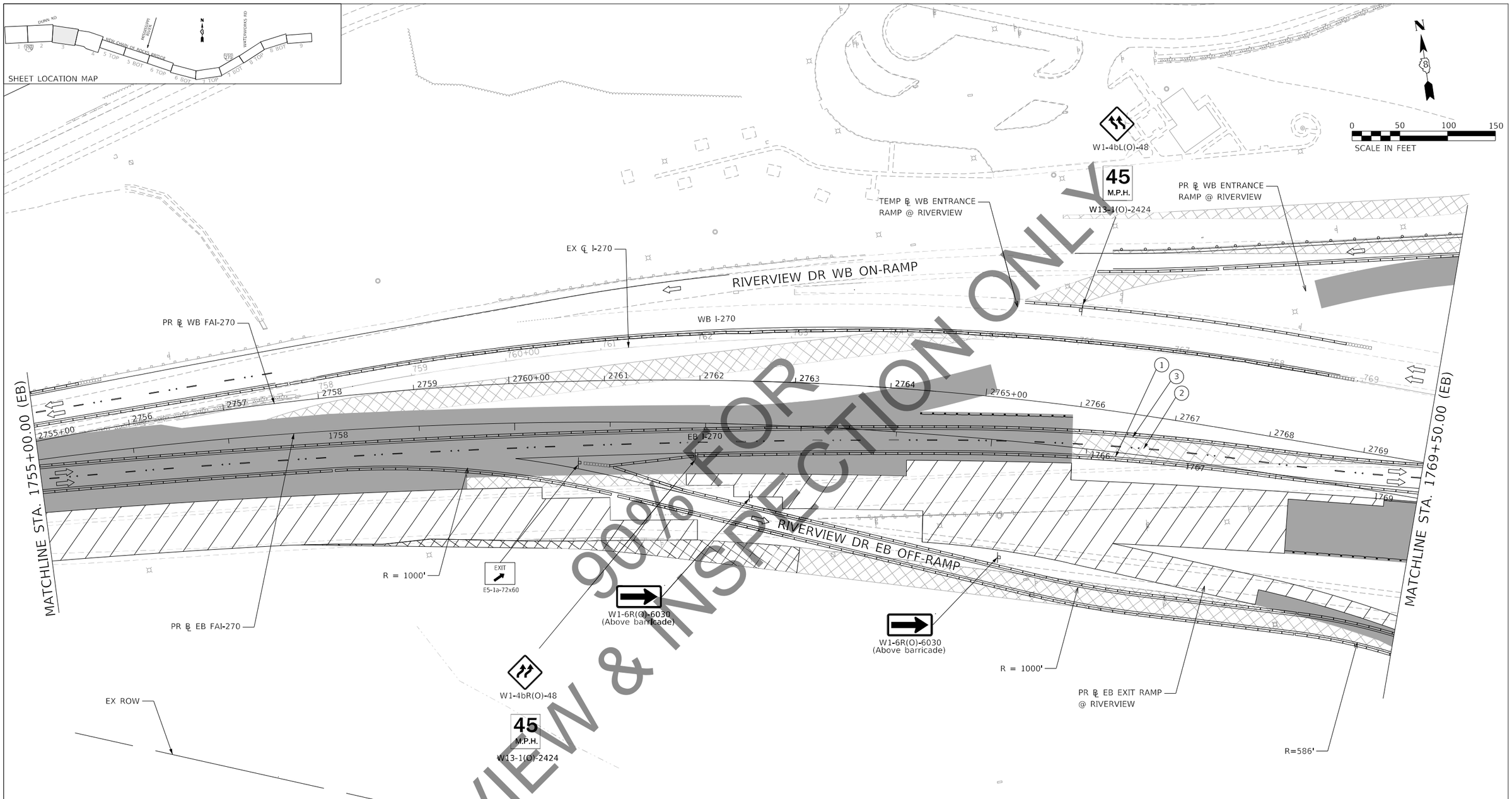

90% FOR REVIEW & INSPECTION ONLY

MAINTENANCE OF TRAFFIC LEGEND

- COMPLETED CONSTRUCTION
- WORK ZONE
- TEMPORARY PAVEMENT
- TEMPORARY PAVEMENT PLACED IN PREVIOUS STAGE
- TRAFFIC FLOW
- EXISTING/PROPOSED SIGN
- TYPE II BARRICADES OR DRUMS WITH BI-DIRECTIONAL STEADY BURN LIGHT AT 50' C-C (TYP.) 25' C-C IN CURVES AND RADII, AND 20' C-C IN TAPERS
- TYPE III BARRICADE
- TEMPORARY CONCRETE BARRIER
- TEMPORARY SHEET PILING
- IMPACT ATTENUATOR TL-3
- EXISTING/PROPOSED LIGHT POLE

1. WHITE PAVEMENT MARKING TAPE, TYPE III 4"
2. WHITE DASHED PAVEMENT MARKING TAPE, TYPE III 4"
3. YELLOW PAVEMENT MARKING TAPE, TYPE III 4"

NOTE: SHEET INCLUDED FOR REFERENCE ONLY. SEE MoDOT RIVERVIEW DRIVE PLANS FOR ADDITIONAL INFORMATION.

MODEL: Default
FILE NAME: C:\CS4PDF\99394508& 41\0876190-sht-mot-PH1C-03.dgn

HORNER & SHIFRIN
Teaming with: PARSONS

USER NAME = PWICS$	DESIGNED - RO	REVISED -
	DRAWN - SQ	REVISED -
PLOT SCALE = 50.0000 ' / in.	CHECKED - JB	REVISED -
PLOT DATE = 11/12/2021	DATE - 2021/07/27	REVISED -

STATE OF ILLINOIS
DEPARTMENT OF TRANSPORTATION

FAI 270 TRAFFIC CONTROL PLAN
PHASE 1C

SCALE: 1" = 50' | SHEET 3 OF 9 SHEETS | STA. 1755+00.00 TO STA. 1769+50.00

F.A. RTE.	SECTION	COUNTY	TOTAL SHEETS	SHEET NO.
270	60B-1	MADISON	860	878
		CONTRACT NO. 76J90		
	ILLINOIS	FED. AID PROJECT		

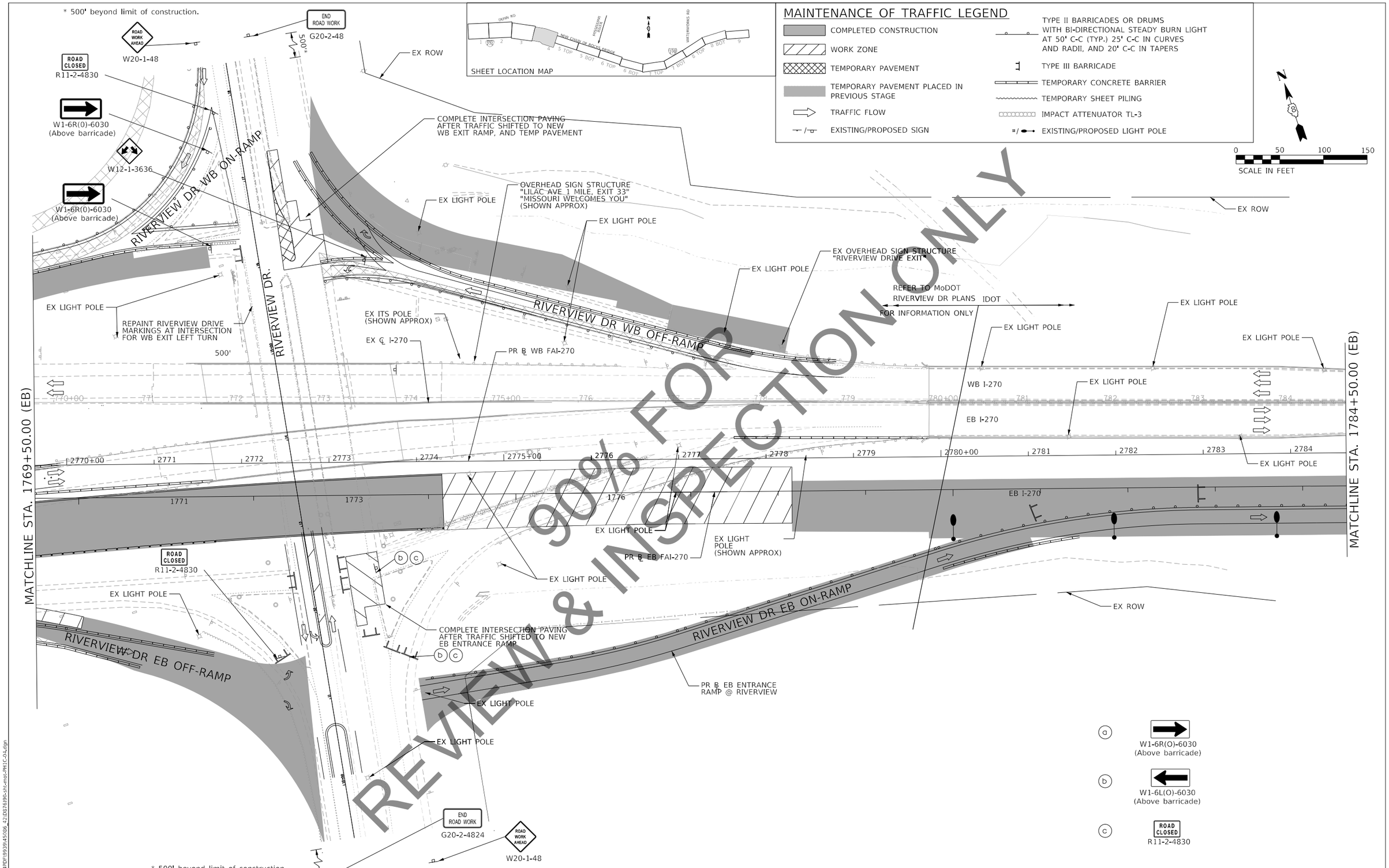

HORNER & SHIFRIN / Teaming with: PARSONS	USER NAME = PWICS$	DESIGNED - RO	REVISED -
		DRAWN - SQ	REVISED -
	PLOT SCALE = 50.0000 ' / in.	CHECKED - JB	REVISED -
	PLOT DATE = 11/12/2021	DATE - 2021/07/27	REVISED -

STATE OF ILLINOIS
DEPARTMENT OF TRANSPORTATION

FAI 270 TRAFFIC CONTROL PLAN
PHASE 1C

SCALE: 1" = 50' | SHEET 4 OF 9 SHEETS | STA. 1769+50.00 TO STA. 1784+50.00

F.A. RTE.	SECTION	COUNTY	TOTAL SHEETS	SHEET NO.
270	60B-1	MADISON	860	889
		CONTRACT NO. 76J90		
		ILLINOIS	FED. AID PROJECT	

MODEL: Default
FILE NAME: C:\ICS4PDF\99394508\6_42\D876\PH-sht-mot-PH1C-01.dgn

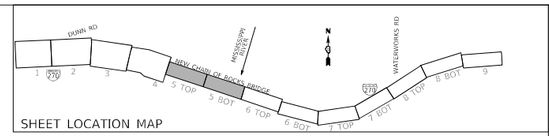

MAINTENANCE OF TRAFFIC LEGEND

- COMPLETED CONSTRUCTION
- WORK ZONE
- TEMPORARY PAVEMENT
- TEMPORARY PAVEMENT PLACED IN PREVIOUS STAGE
- TRAFFIC FLOW
- EXISTING/PROPOSED SIGN
- TYPE II BARRICADES OR DRUMS WITH BI-DIRECTIONAL STEADY BURN LIGHT AT 50' C-C (TYP.) 25' C-C IN CURVES AND RADII, AND 20' C-C IN TAPERS
- TYPE III BARRICADE
- TEMPORARY CONCRETE BARRIER
- TEMPORARY SHEET PILING
- IMPACT ATTENUATOR TL-3
- EXISTING/PROPOSED LIGHT POLE

N

0 50 100 150
SCALE IN FEET

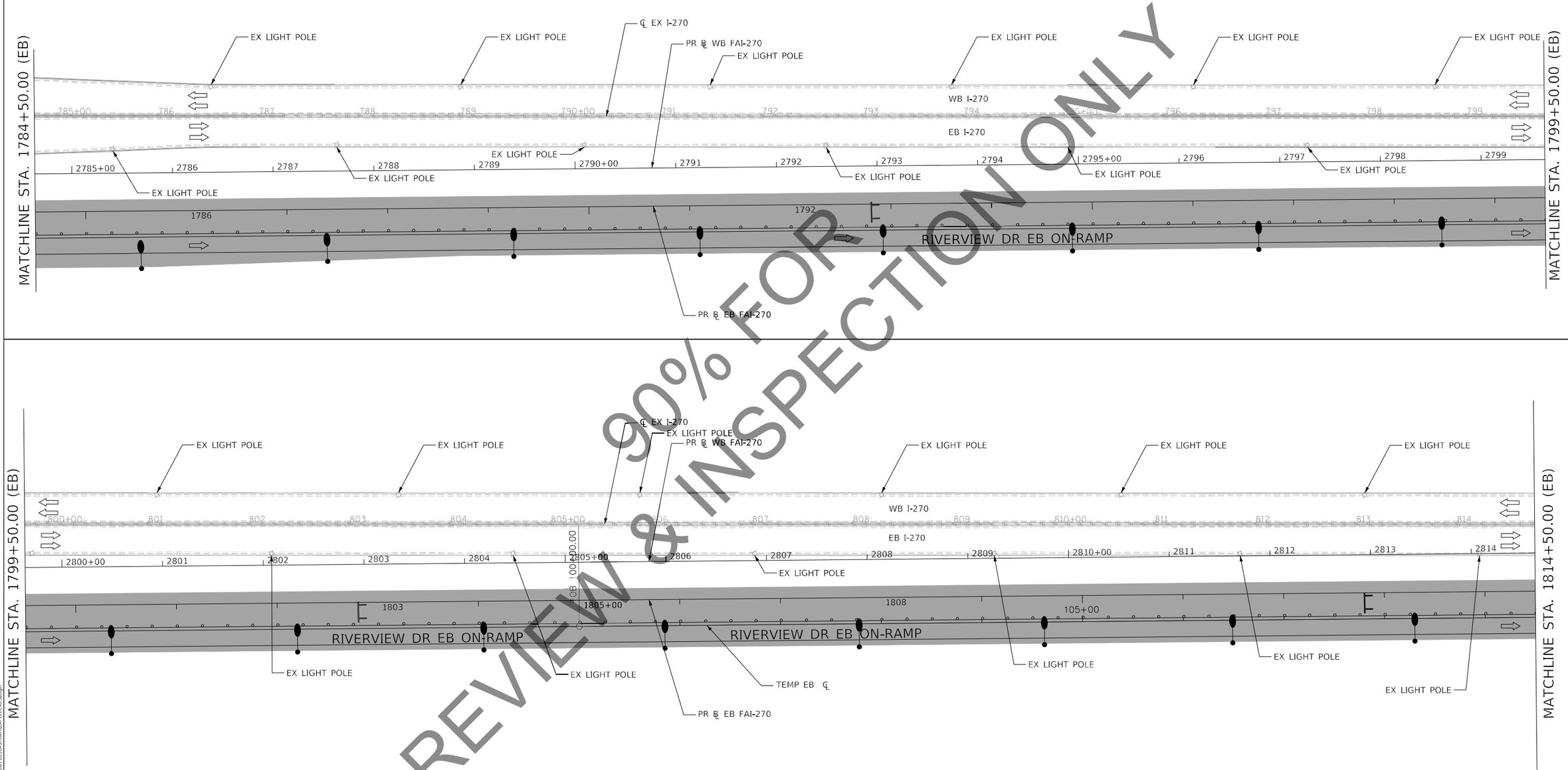

90% FOR REVIEW & INSPECTION ONLY

MODEL: Default
FILE NAME: C:\CS4PDF\99390\45086_43\D876J90-sht-mot-PH1C-05.dgn

HORNER & SHIFRIN / Teaming with: PARSONS	USER NAME = PWICS$	DESIGNED - RO	REVISED -
		DRAWN - SQ	REVISED -
	PLOT SCALE = 50.0000 ' / in.	CHECKED - JB	REVISED -
	PLOT DATE = 11/12/2021	DATE - 2021/07/27	REVISED -

STATE OF ILLINOIS
DEPARTMENT OF TRANSPORTATION

FAI 270 TRAFFIC CONTROL PLAN
PHASE 1C

SCALE: 1" = 50' | SHEET 5 OF 9 SHEETS | STA. 1784+50.00 TO STA. 1814+50.00

F.A. RTE.	SECTION	COUNTY	TOTAL SHEETS	SHEET NO.
270	60B-1	MADISON	860	89
		CONTRACT NO. 76J90		
		ILLINOIS FED. AID PROJECT		

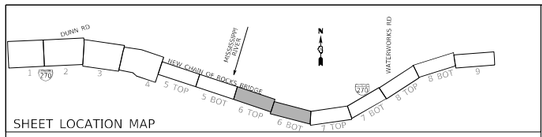

SHEET LOCATION MAP

MAINTENANCE OF TRAFFIC LEGEND

- COMPLETED CONSTRUCTION
- WORK ZONE
- TEMPORARY PAVEMENT
- TEMPORARY PAVEMENT PLACED IN PREVIOUS STAGE
- TRAFFIC FLOW
- EXISTING/PROPOSED SIGN
- TYPE II BARRICADES OR DRUMS WITH BI-DIRECTIONAL STEADY BURN LIGHT AT 50' C-C (TYP.) 25' C-C IN CURVES AND RADII, AND 20' C-C IN TAPERS
- TYPE III BARRICADE
- TEMPORARY CONCRETE BARRIER
- TEMPORARY SHEET PILING
- IMPACT ATTENUATOR TL-3
- EXISTING/PROPOSED LIGHT POLE

1. WHITE PAVEMENT MARKING TAPE, TYPE III 4"
2. WHITE DASHED PAVEMENT MARKING TAPE, TYPE III 4"
3. YELLOW PAVEMENT MARKING TAPE, TYPE III 4"

N

0 50 100 150
SCALE IN FEET

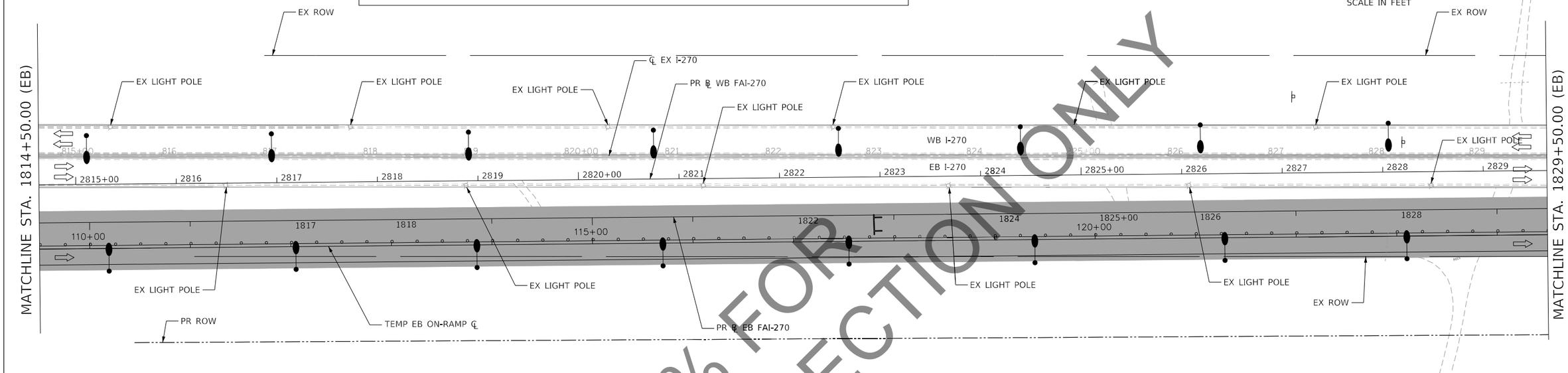

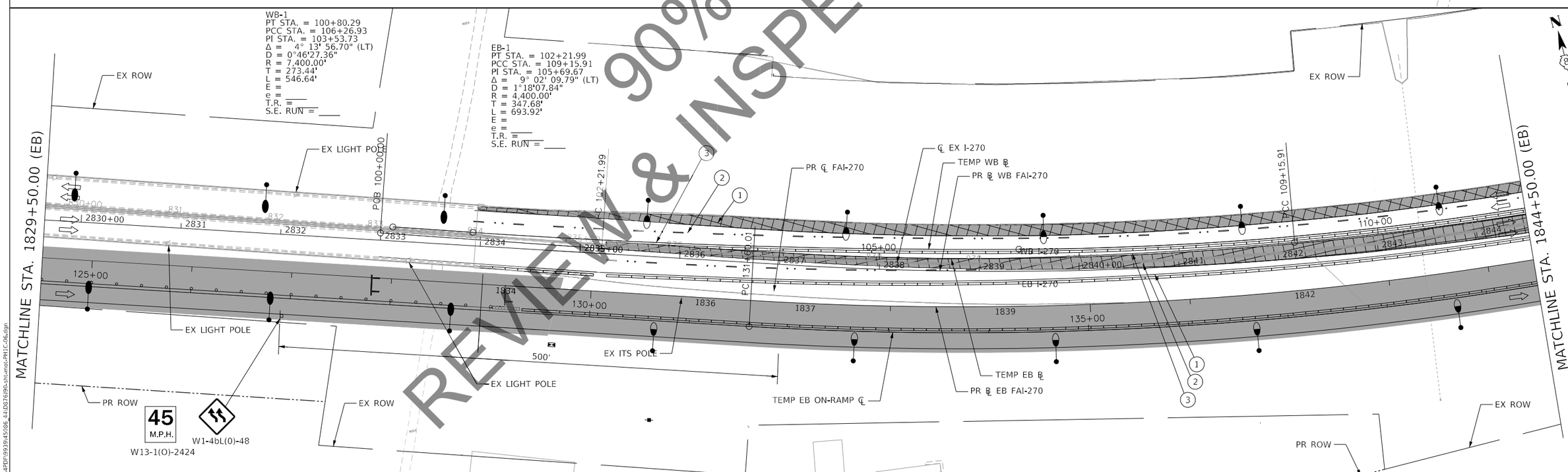

REVIEW & INSPECTION ONLY
90% FOR

MODEL: Default
FILE NAME: C:\ICS4PDF\9939\45086_41\D676190-sht-mot-PH1C-06.dgn

HORNER & SHIFRIN Teaming with: PARSONS	USER NAME = PWICS$	DESIGNED - RO	REVISED -	STATE OF ILLINOIS DEPARTMENT OF TRANSPORTATION	FAI 270 TRAFFIC CONTROL PLAN PHASE 1C	F.A. RTE. 270	SECTION 60B-1	COUNTY MADISON	TOTAL SHEETS 860 / SHEET NO. 901
		DRAWN - SQ	REVISED -					CONTRACT NO. 76J90	
	PLOT SCALE = 50.0000 ' / in.	CHECKED - JB	REVISED -						
	PLOT DATE = 11/12/2021	DATE - 2021/07/27	REVISED -		SCALE: 1" = 50' SHEET 6 OF 9 SHEETS STA. 1814+50.00 TO STA. 1844+50.00			ILLINOIS FED. AID PROJECT	

RMP-1
PC STA. = 131+60.01
PT STA. = 163+18.69
PI STA. = 148+54.19
Δ = 51° 19' 37.49" (LT)
D = 1°37'29.82
R = 3,526.00'
T = 1,694.19'
L = 3,158.68'
E =
e =
T.R. =
S.E. RUN =

EB-2
PCC STA. = 109+15.91
PT STA. = 134+46.82
PI STA. = 122+43.85
Δ = 42° 51' 06.85" (LT)
D = 1°41'35.30
R = 3,384.00'
T = 1,327.94'
L = 2,530.92'
E =
e =
T.R. =
S.E. RUN =

WB-2
PCC STA. = 106+26.93
PT STA. = 134+29.03
PI STA. = 121+14.26
Δ = 47° 31' 39" (LT)
D = 1°41'46.12"(LT)
R = 3,378.00'
T = 1,487.33'
L = 2,802.10'
E =
e =
T.R. =
S.E. RUN =

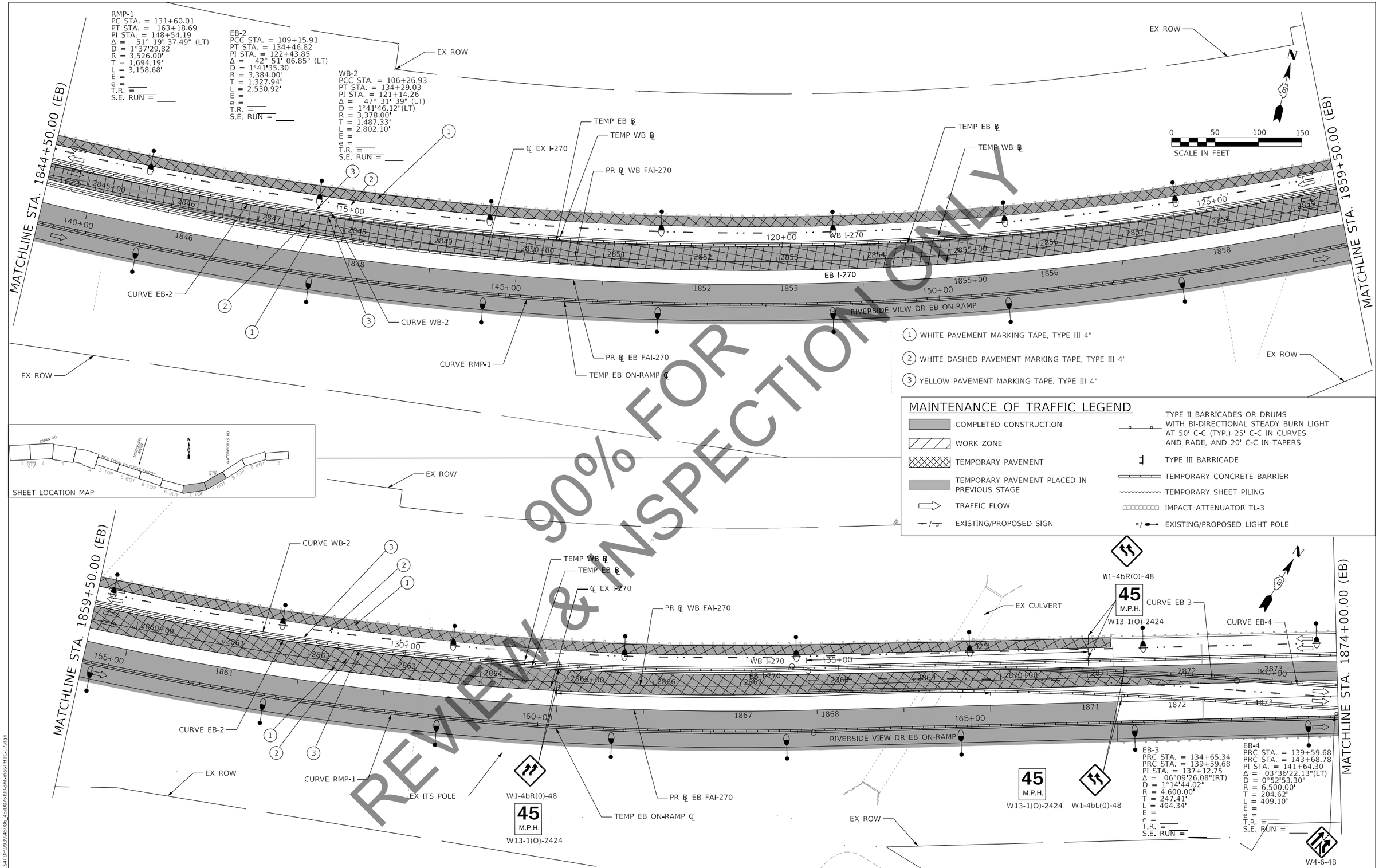

MAINTENANCE OF TRAFFIC LEGEND

- COMPLETED CONSTRUCTION
- WORK ZONE
- TEMPORARY PAVEMENT
- TEMPORARY PAVEMENT PLACED IN PREVIOUS STAGE
- TRAFFIC FLOW
- EXISTING/PROPOSED SIGN
- TYPE II BARRICADES OR DRUMS WITH BI-DIRECTIONAL STEADY BURN LIGHT AT 50' C-C (TYP.) 25' C-C IN CURVES AND RADII, AND 20' C-C IN TAPERS
- TYPE III BARRICADE
- TEMPORARY CONCRETE BARRIER
- TEMPORARY SHEET PILING
- IMPACT ATTENUATOR TL-3
- EXISTING/PROPOSED LIGHT POLE

90% FOR REVIEW & INSPECTION ONLY

HORNER & SHIFRIN Teaming with: PARSONS	USER NAME = PWICS$	DESIGNED - RO	REVISED -
		DRAWN - SQ	REVISED -
	PLOT SCALE = 50.0000 ' / in.	CHECKED - JB	REVISED -
	PLOT DATE = 11/12/2021	DATE - 2021/07/27	REVISED -

STATE OF ILLINOIS
DEPARTMENT OF TRANSPORTATION

FAI 270 TRAFFIC CONTROL PLAN
PHASE 1C

SCALE: 1" = 50' | SHEET 7 OF 9 SHEETS | STA. 1844+50.00 TO STA. 1874+00.00

F.A. RTE.	SECTION	COUNTY	TOTAL SHEETS	SHEET NO.
270	60B-1	MADISON	860	912

CONTRACT NO. 76J90
ILLINOIS FED. AID PROJECT

MODEL: Default
FILE NAME: C:\ICS4PDF\99390\45086_45\D676J90-sht-mot-PH1C-07.dgn

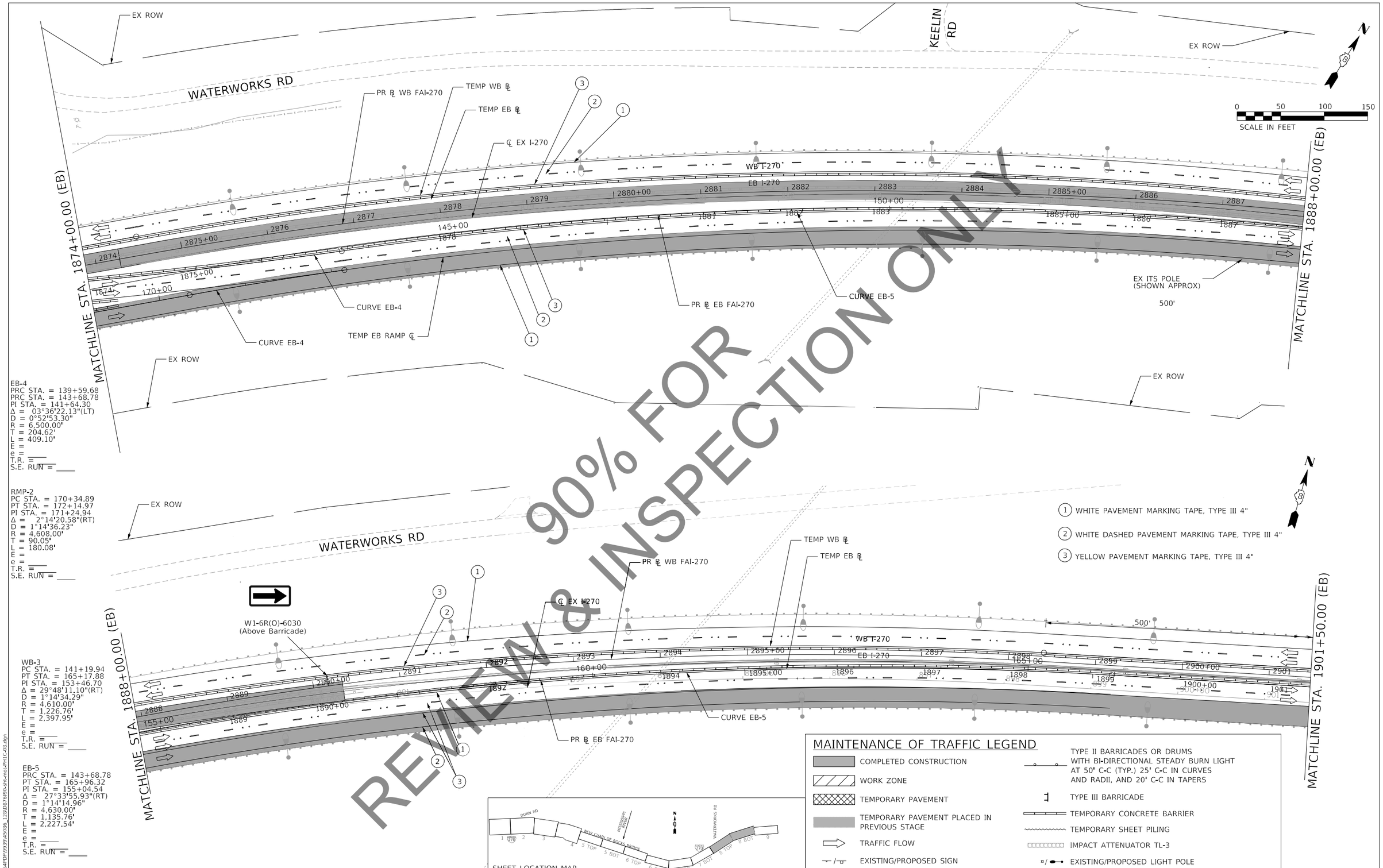

MODEL: Default
FILE NAME: C:\ICS4PDF\9939\45086_T280D076\9h-ms2-PH1C-08.dgn

HORNER & SHIFRIN
Teaming with: PARSONS

USER NAME = PWICS$	DESIGNED - RO	REVISED -	
	DRAWN - SQ	REVISED -	
PLOT SCALE = 50.0000 ' / in.	CHECKED - JB	REVISED -	
PLOT DATE = 11/12/2021	DATE - 2021/07/27	REVISED -	

STATE OF ILLINOIS
DEPARTMENT OF TRANSPORTATION

FAI 270 TRAFFIC CONTROL PLAN
PHASE 1C

SCALE: 1" = 50' | SHEET 8 OF 9 SHEETS | STA. 1874+00.00 TO STA. 1901+50.00

F.A. RTE.	SECTION	COUNTY	TOTAL SHEETS	SHEET NO.
270	60B-1	MADISON	860	928

CONTRACT NO. 76J90
ILLINOIS | FED. AID PROJECT

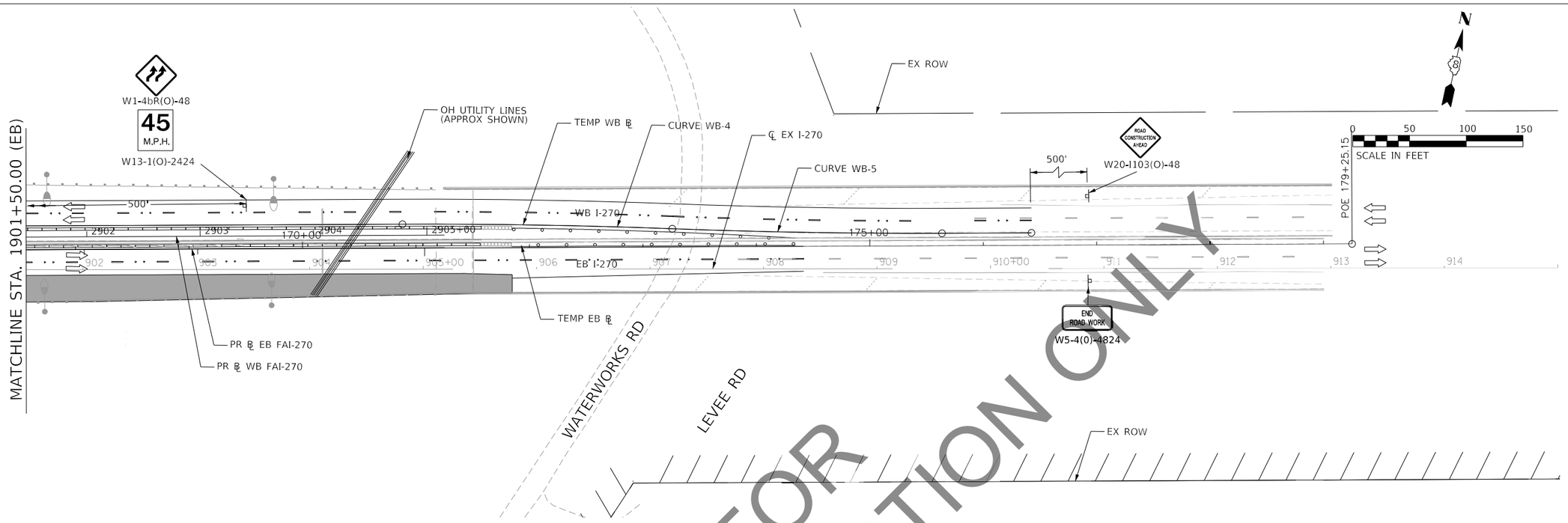

90% FOR REVIEW & INSPECTION ONLY

WB-4
PC STA. = 170+89.05
PRC STA. = 173+26.89
PI STA. = 172+07.99
Δ = 2°26'00.41"(RT)
D = 1°01'23.30"
R = 5,600.00'
T = 118.94'
L = 237.84'
E =
e = ____
T.R. = ____
S.E. RUN = ____

WB-5
PRC STA. = 173+26.89
PT STA. = 175+64.73
PI STA. = 174+45.83
Δ = 2°26'00.41"(LT)
D = 1°01'23.30"
R = 5,600.00'
T = 118.94'
L = 237.84'
E =
e = ____
T.R. = ____
S.E. RUN = ____

MAINTENANCE OF TRAFFIC LEGEND

- COMPLETED CONSTRUCTION
- WORK ZONE
- TEMPORARY PAVEMENT
- TEMPORARY PAVEMENT PLACED IN PREVIOUS STAGE
- TRAFFIC FLOW
- EXISTING/PROPOSED SIGN
- TYPE II BARRICADES OR DRUMS WITH BI-DIRECTIONAL STEADY BURN LIGHT AT 50' C-C (TYP.) 25' C-C IN CURVES AND RADII, AND 20' C-C IN TAPERS
- TYPE III BARRICADE
- TEMPORARY CONCRETE BARRIER
- TEMPORARY SHEET PILING
- IMPACT ATTENUATOR TL-3
- EXISTING/PROPOSED LIGHT POLE

SHEET LOCATION MAP

MODEL: Default
FILE NAME: C:\CS4PDF\99394\5086_129\D076\90-sht-mot-PH1C-09.dgn

HORNER & SHIFRIN / Teaming with: PARSONS	USER NAME = PWICS$	DESIGNED - RO	REVISED -
		DRAWN - SQ	REVISED -
	PLOT SCALE = 50.0000 ' / in.	CHECKED - JB	REVISED -
	PLOT DATE = 11/12/2021	DATE - 2021/07/27	REVISED -

STATE OF ILLINOIS
DEPARTMENT OF TRANSPORTATION

FAI 270 TRAFFIC CONTROL PLAN
PHASE 1C

SCALE: 1" = 50' | SHEET 9 OF 9 SHEETS | STA. 901+50.00 TO STA.

F.A. RTE.	SECTION	COUNTY	TOTAL SHEETS	SHEET NO.
270	60B-1	MADISON	860	931

CONTRACT NO. 76J90

ILLINOIS | FED. AID PROJECT

SHEET LOCATION MAP

MAINTENANCE OF TRAFFIC LEGEND

- COMPLETED CONSTRUCTION
- WORK ZONE
- TEMPORARY PAVEMENT
- TEMPORARY PAVEMENT PLACED IN PREVIOUS STAGE
- TRAFFIC FLOW
- EXISTING/PROPOSED SIGN
- TYPE II BARRICADES OR DRUMS WITH BI-DIRECTIONAL STEADY BURN LIGHT AT 50' C-C (TYP.) 25' C-C IN CURVES AND RADII, AND 20' C-C IN TAPERS
- TYPE III BARRICADE
- TEMPORARY CONCRETE BARRIER
- TEMPORARY SHEET PILING
- IMPACT ATTENUATOR TL-3
- EXISTING/PROPOSED LIGHT POLE

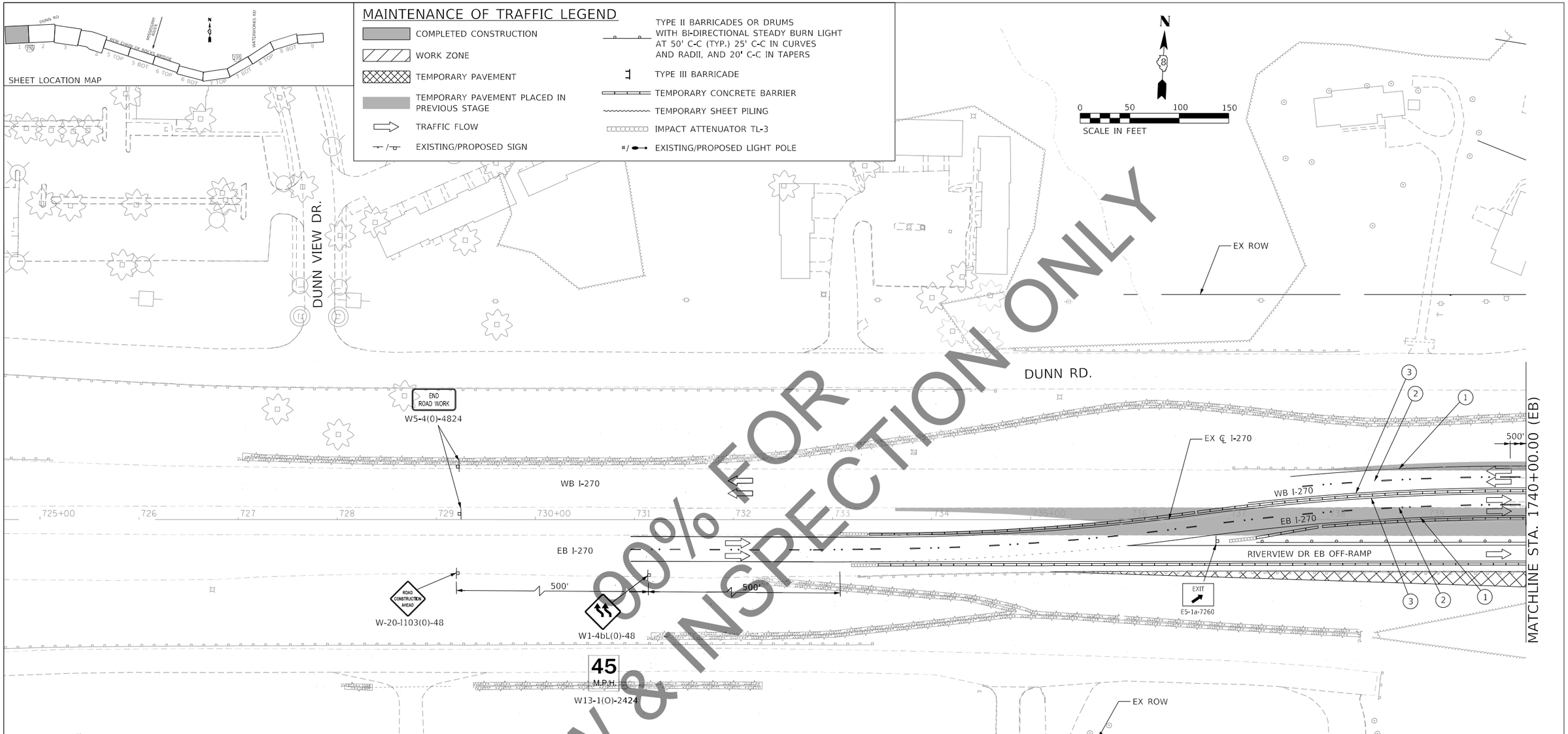

90% FOR REVIEW & INSPECTION ONLY

STAGE SUMMARY

MOT PHASE 1D:

1. MAINTAIN WESTBOUND I-270 TRAFFIC AS IN THE PREVIOUS PHASE.

2. PLACE EASTBOUND I-270 TRAFFIC ON THE NEW EASTBOUND RIVER BRIDGE.

3. ON THE ILLINOIS SIDE, PLACE THE EASTBOUND I-270 TRAFFIC ON THE NEW EASTBOUND PAVEMENT.

4. CONSTRUCT PERMANENT I-270 PAVEMENT IN THE MEDIAN AS SHOWN IN THE PLANS.

(1) WHITE PAVEMENT MARKING TAPE, TYPE III 4"

(2) WHITE DASHED PAVEMENT MARKING TAPE, TYPE III 4"

(3) YELLOW PAVEMENT MARKING TAPE, TYPE III 4"

NOTE: SHEET INCLUDED FOR REFERENCE ONLY. SEE MoDOT RIVERVIEW DRIVE PLANS FOR ADDITIONAL INFORMATION.

MODEL: Default
FILE NAME: C:\PCS4PDF\9979\45086_49\D876\PH-sht-mot-PH1D-01.dgn

HORNER & SHIFRIN / Teaming with: PARSONS	USER NAME = PWICS$	DESIGNED - RO	REVISED -
		DRAWN - SQ	REVISED -
	PLOT SCALE = 50.0000 ' / in.	CHECKED - JB	REVISED -
	PLOT DATE = 11/17/2021	DATE - 2021/07/27	REVISED -

STATE OF ILLINOIS
DEPARTMENT OF TRANSPORTATION

FAI 270 TRAFFIC CONTROL PLAN
PHASE 1D

SCALE: 1" = 50' | SHEET 1 OF 9 SHEETS | STA. TO STA. 1740+00.00

F.A. RTE.	SECTION	COUNTY	TOTAL SHEETS	SHEET NO.
270	60B-1	MADISON	860	946
		CONTRACT NO. 76J90		
		ILLINOIS	FED. AID PROJECT	

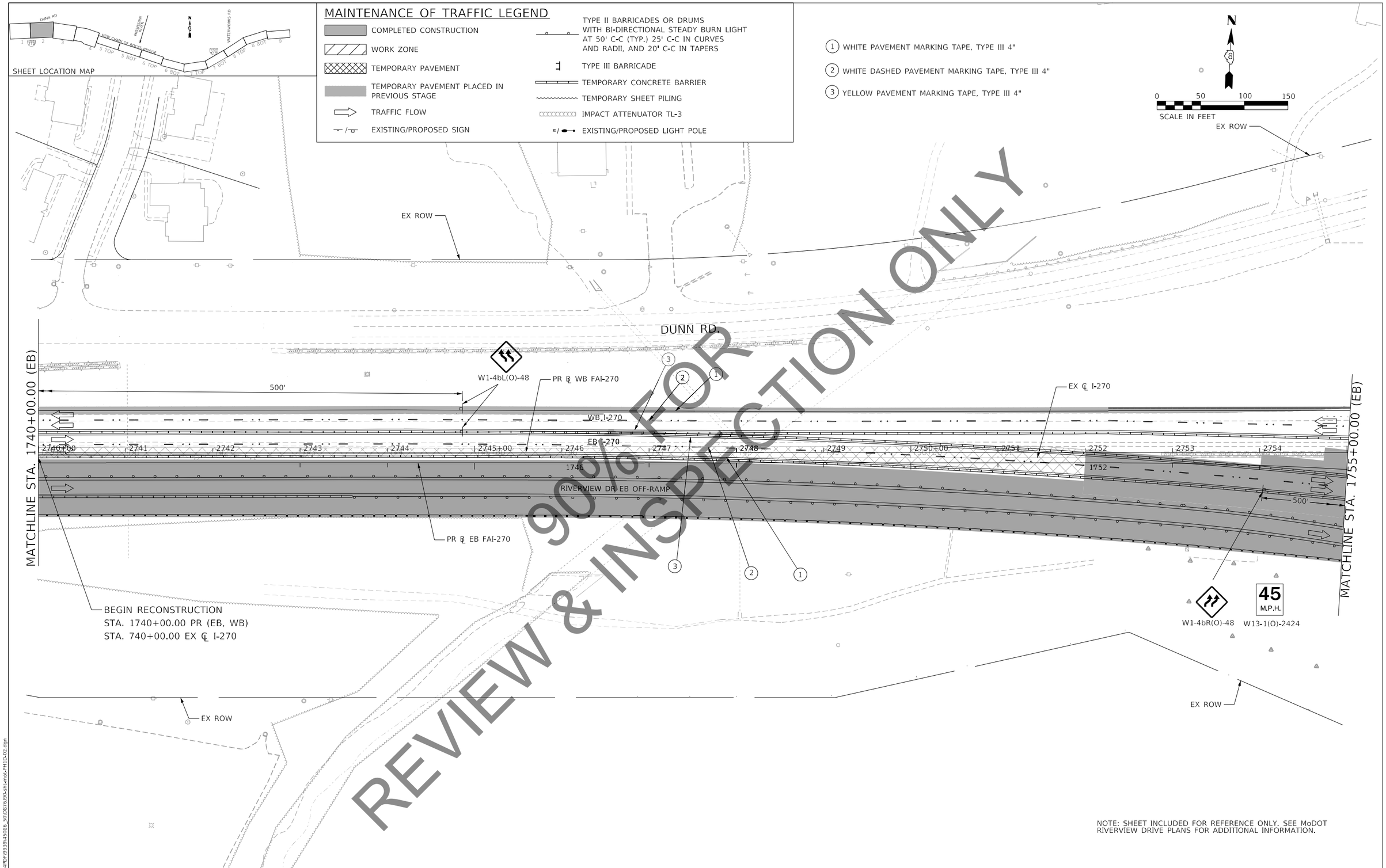

NOTE: SHEET INCLUDED FOR REFERENCE ONLY. SEE MoDOT RIVERVIEW DRIVE PLANS FOR ADDITIONAL INFORMATION.

MODEL: Default
FILE NAME: C:\CS4PDF\9939\45086_50\D676J9\-ph-mot-PH1D-02.dgn

HORNER & SHIFRIN / Teaming with: PARSONS	USER NAME = PWICS$	DESIGNED - RO	REVISED -
		DRAWN - SQ	REVISED -
	PLOT SCALE = 50.0000 ' / in.	CHECKED - JB	REVISED -
	PLOT DATE = 11/12/2021	DATE - 2021/07/27	REVISED -

STATE OF ILLINOIS
DEPARTMENT OF TRANSPORTATION

FAI 270 TRAFFIC CONTROL PLAN
PHASE 1D

SCALE: 1" = 50' | SHEET 2 OF 9 SHEETS | STA. 1740+00.00 TO STA. 1755+00.00

F.A. RTE.	SECTION	COUNTY	TOTAL SHEETS	SHEET NO.
270	60B-1	MADISON	860	95

CONTRACT NO. 76J90

ILLINOIS | FED. AID PROJECT

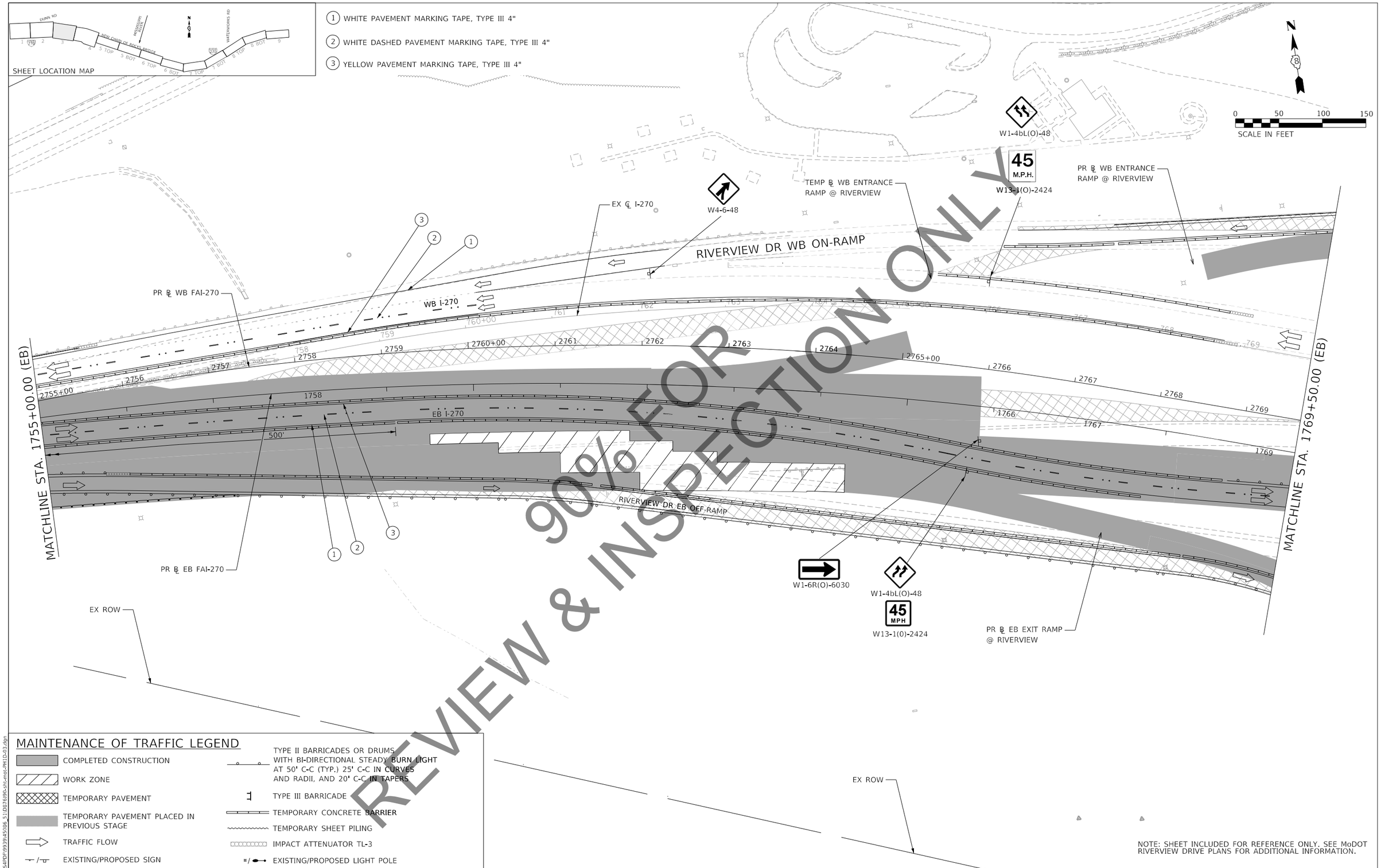

90% FOR REVIEW & INSPECTION ONLY

MODEL: Default
FILE NAME: C:\PCS4PDF\9939\45086_51D876\90-IN-mol-PH1D-03.dgn

HORNER & SHIFRIN
Teaming with: PARSONS

USER NAME = PWICS$	DESIGNED - RO	REVISED -	
	DRAWN - SQ	REVISED -	
PLOT SCALE = 50.0000 ' / in.	CHECKED - JB	REVISED -	
PLOT DATE = 11/12/2021	DATE - 2021/07/27	REVISED -	

STATE OF ILLINOIS
DEPARTMENT OF TRANSPORTATION

FAI 270 TRAFFIC CONTROL PLAN
PHASE 1D

SCALE: 1" = 50' | SHEET 3 OF 9 SHEETS | STA. 1755+00.00 TO STA. 1769+50.00

F.A. RTE.	SECTION	COUNTY	TOTAL SHEETS	SHEET NO.
270	60B-1	MADISON	860	96

CONTRACT NO. 76J90

ILLINOIS | FED. AID PROJECT

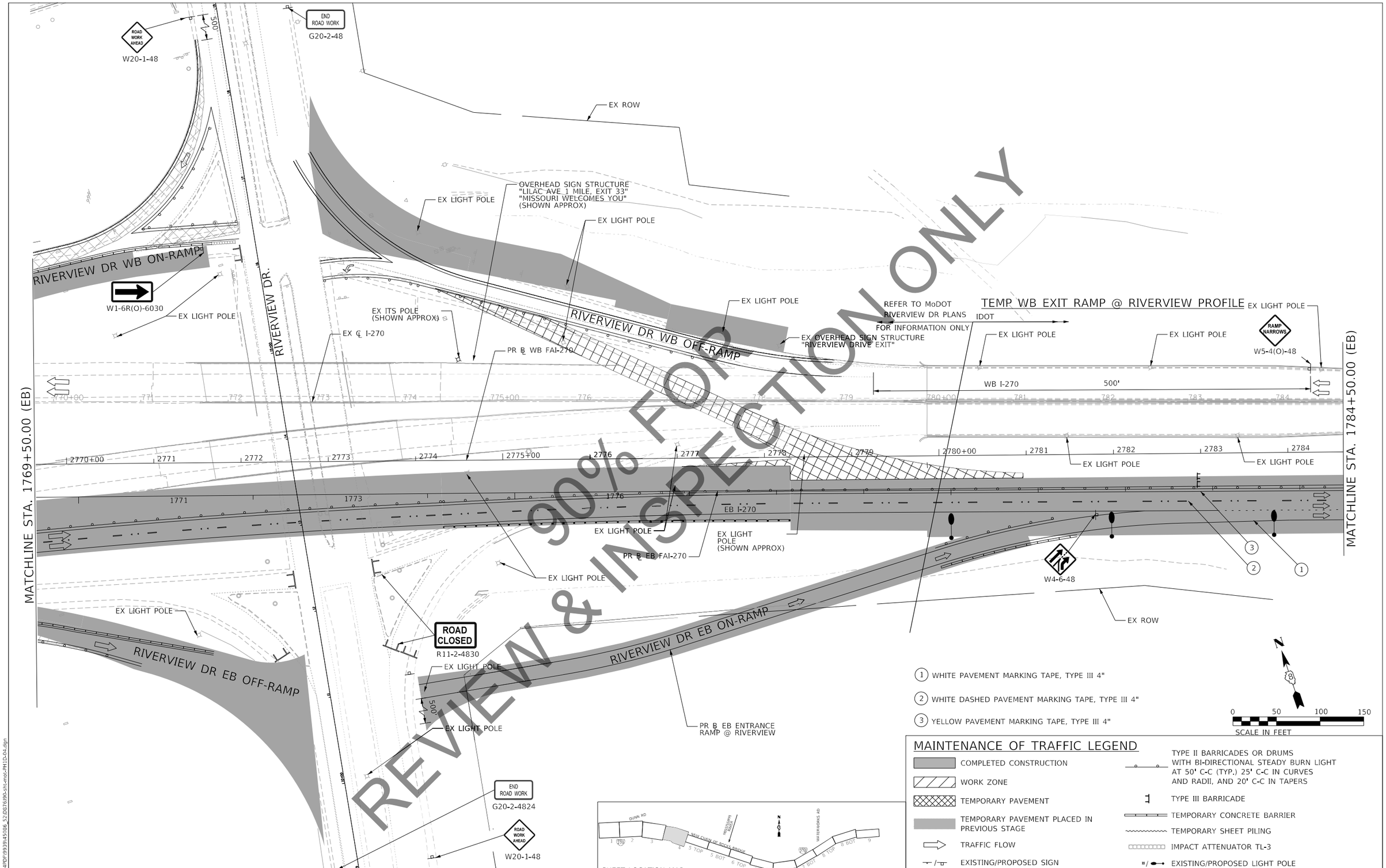

90% FOR REVIEW & INSPECTION ONLY

MODEL: Default
FILE NAME: C:\ICS4PDF\9939\45086_52\D8761PH-sht-mot-PH1D-04.dgn

HORNER & SHIFRIN
Teaming with: PARSONS

USER NAME = PWICS$	DESIGNED - RO	REVISED -	
	DRAWN - SQ	REVISED -	
PLOT SCALE = 50.0000 ' / in.	CHECKED - JB	REVISED -	
PLOT DATE = 11/12/2021	DATE - 2021/07/27	REVISED -	

STATE OF ILLINOIS
DEPARTMENT OF TRANSPORTATION

FAI 270 TRAFFIC CONTROL PLAN
PHASE 1D

SCALE: 1" = 50' | SHEET 4 OF 9 SHEETS | STA. 1769+50.00 TO STA. 1784+50.00

F.A. RTE.	SECTION	COUNTY	TOTAL SHEETS	SHEET NO.
270	60B-1	MADISON	860	979
		CONTRACT NO. 76J90		
		ILLINOIS	FED. AID PROJECT	

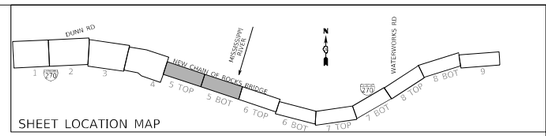

SHEET LOCATION MAP

MAINTENANCE OF TRAFFIC LEGEND

- COMPLETED CONSTRUCTION
- WORK ZONE
- TEMPORARY PAVEMENT
- TEMPORARY PAVEMENT PLACED IN PREVIOUS STAGE
- TRAFFIC FLOW
- EXISTING/PROPOSED SIGN
- TYPE II BARRICADES OR DRUMS WITH BI-DIRECTIONAL STEADY BURN LIGHT AT 50' C-C (TYP.) 25' C-C IN CURVES AND RADII, AND 20' C-C IN TAPERS
- TYPE III BARRICADE
- TEMPORARY CONCRETE BARRIER
- TEMPORARY SHEET PILING
- IMPACT ATTENUATOR TL-3
- EXISTING/PROPOSED LIGHT POLE

1. WHITE PAVEMENT MARKING TAPE, TYPE III 4"
2. WHITE DASHED PAVEMENT MARKING TAPE, TYPE III 4"
3. YELLOW PAVEMENT MARKING TAPE, TYPE III 4"

N

0 50 100 150
SCALE IN FEET

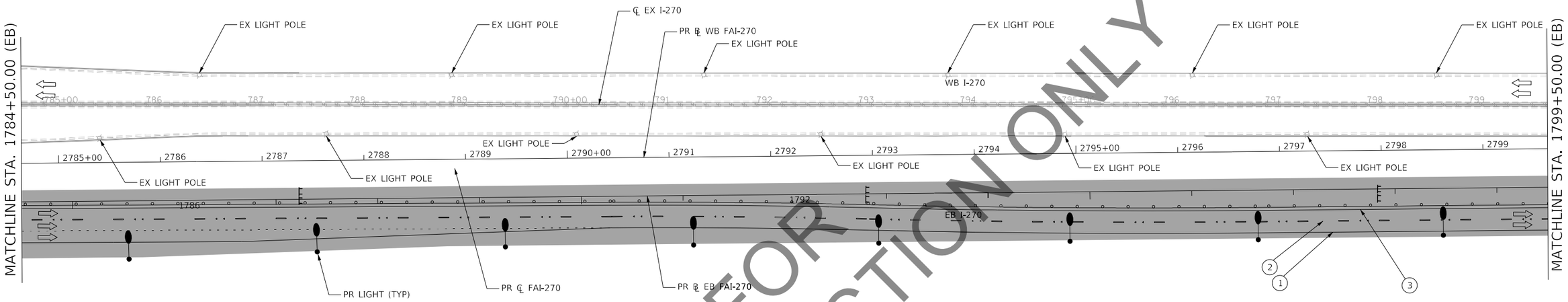

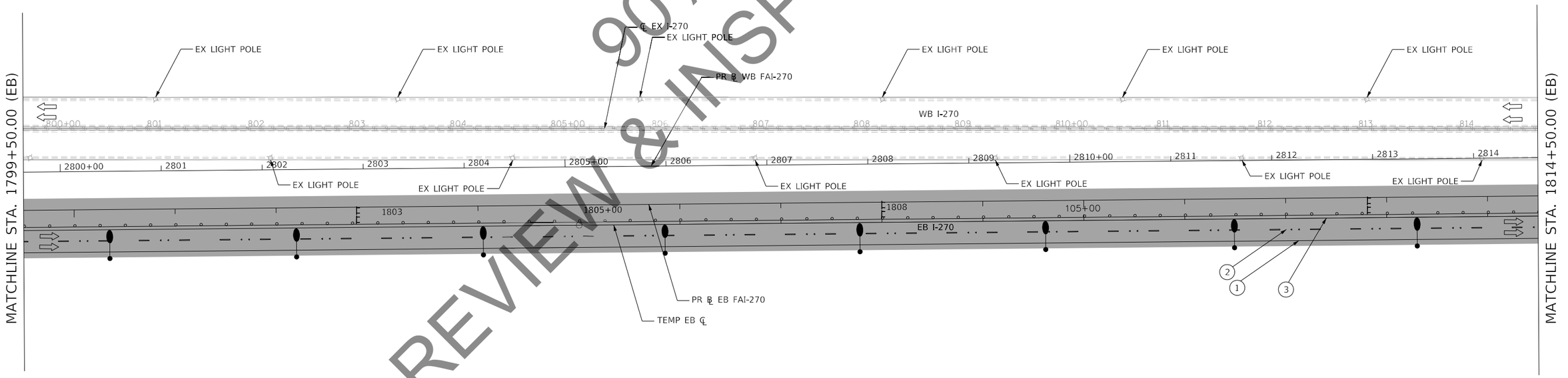

90% FOR REVIEW & INSPECTION ONLY

MODEL: Default
FILE NAME: C:\CS4PDF\99394508\6_53\D676J9\h-ph1-mot-PH1D-05.dgn

HORNER & SHIFRIN	USER NAME = PWICS$	DESIGNED - RO	REVISED -
		DRAWN - SQ	REVISED -
Teaming with: PARSONS	PLOT SCALE = 50.0000 ' / in.	CHECKED - JB	REVISED -
	PLOT DATE = 11/12/2021	DATE - 2021/07/27	REVISED -

STATE OF ILLINOIS
DEPARTMENT OF TRANSPORTATION

FAI 270 TRAFFIC CONTROL PLAN
PHASE 1D

SCALE: 1" = 50' | SHEET 5 OF 9 SHEETS | STA. 1784+50.00 TO STA. 1814+50.00

F.A. RTE.	SECTION	COUNTY	TOTAL SHEETS	SHEET NO.
270	60B-1	MADISON	860	98

CONTRACT NO. 76J90

ILLINOIS | FED. AID PROJECT

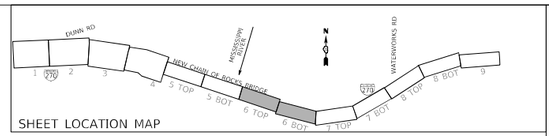

MAINTENANCE OF TRAFFIC LEGEND

- COMPLETED CONSTRUCTION
- WORK ZONE
- TEMPORARY PAVEMENT
- TEMPORARY PAVEMENT PLACED IN PREVIOUS STAGE
- TRAFFIC FLOW
- EXISTING/PROPOSED SIGN
- TYPE II BARRICADES OR DRUMS WITH BI-DIRECTIONAL STEADY BURN LIGHT AT 50' C-C (TYP.) 25' C-C IN CURVES AND RADII, AND 20' C-C IN TAPERS
- TYPE III BARRICADE
- TEMPORARY CONCRETE BARRIER
- TEMPORARY SHEET PILING
- IMPACT ATTENUATOR TL-3
- EXISTING/PROPOSED LIGHT POLE

1. WHITE PAVEMENT MARKING TAPE, TYPE III 4"
2. WHITE DASHED PAVEMENT MARKING TAPE, TYPE III 4"
3. YELLOW PAVEMENT MARKING TAPE, TYPE III 4"

0 50 100 150
SCALE IN FEET

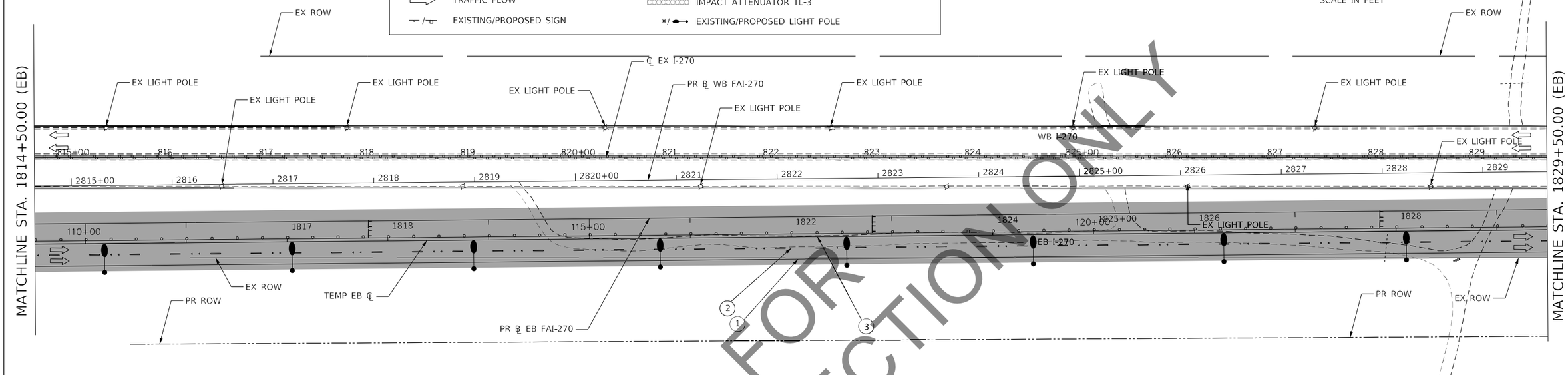

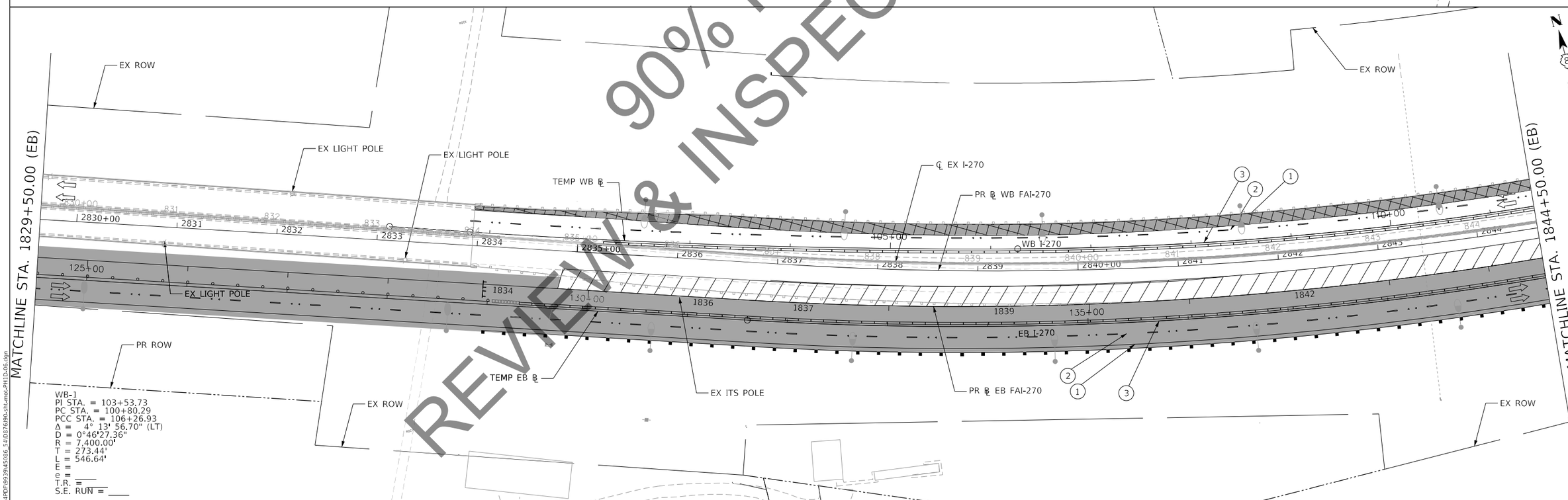

WB-1
PI STA. = 103+53.73
PC STA. = 100+80.29
PCC STA. = 106+26.93
Δ = 4° 13' 56.70" (LT)
D = 0°46'27.36"
R = 7,400.00'
T = 273.44'
L = 546.64'
E = ____
e = ____
T.R. = ____
S.E. RUN = ____

90% FOR REVIEW & INSPECTION ONLY

MODEL: Default
FILE NAME: C:\CS4PDF\9939\45086_54\D676J90-sht-mot-PH1D-06.dgn

HORNER & SHIFRIN — Teaming with: PARSONS	USER NAME = PWICS$	DESIGNED - RO	REVISED -
		DRAWN - SQ	REVISED -
	PLOT SCALE = 50.0000 ' / in.	CHECKED - JB	REVISED -
	PLOT DATE = 11/12/2021	DATE - 2021/07/27	REVISED -

STATE OF ILLINOIS
DEPARTMENT OF TRANSPORTATION

FAI 270 TRAFFIC CONTROL PLAN
PHASE 1D

SCALE: 1" = 50' | SHEET 6 OF 9 SHEETS | STA. 1814+50.00 TO STA. 1844+50.00

F.A. RTE.	SECTION	COUNTY	TOTAL SHEETS	SHEET NO.
270	60B-1	MADISON	860	99

CONTRACT NO. 76J90
ILLINOIS | FED. AID PROJECT

EB-1
PC STA. = 131+60.01
PT STA. = 163+18.52
PI STA. = 148+54.51
Δ = 51° 24' 42.63" (LT)
D = 1°37'39.80
R = 3,520.00'
T = 1,694.51'
L = 3,158.52'
E =
e =
T.R. =
S.E. RUN =

WB-2
PCC STA. = 106+26.93
PT STA. = 134+29.03
PI STA. = 121+14.26
Δ = 47° 31' 39" (LT)
D = 1°41'46.12"
R = 3,378.00'
T = 1,487.33'
L = 2,802.10'
E =
e =
T.R. =
S.E. RUN =

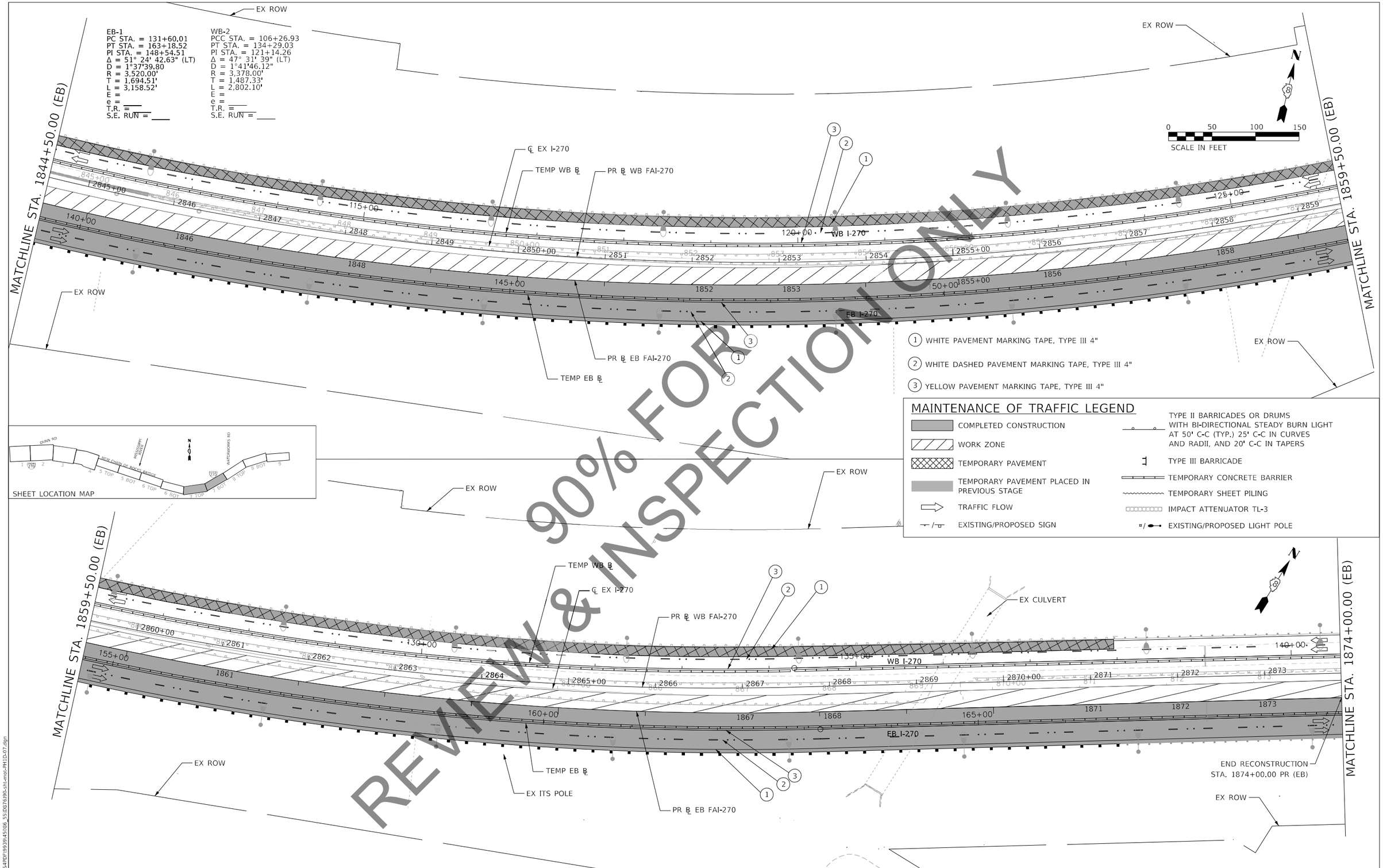

MAINTENANCE OF TRAFFIC LEGEND

- COMPLETED CONSTRUCTION
- WORK ZONE
- TEMPORARY PAVEMENT
- TEMPORARY PAVEMENT PLACED IN PREVIOUS STAGE
- TRAFFIC FLOW
- EXISTING/PROPOSED SIGN
- TYPE II BARRICADES OR DRUMS WITH BI-DIRECTIONAL STEADY BURN LIGHT AT 50' C-C (TYP.) 25' C-C IN CURVES AND RADII, AND 20' C-C IN TAPERS
- TYPE III BARRICADE
- TEMPORARY CONCRETE BARRIER
- TEMPORARY SHEET PILING
- IMPACT ATTENUATOR TL-3
- EXISTING/PROPOSED LIGHT POLE

REVIEW & INSPECTION ONLY 90%

MODEL: Default
FILE NAME: C:\ICS4PDF\9930\45086_53\D676J90-sht-mot-PH1D-07.dgn

HORNER & SHIFRIN
Teaming with: PARSONS

USER NAME = PWICS$	DESIGNED - RO	REVISED -	
	DRAWN - SQ	REVISED -	
PLOT SCALE = 50.0000 ' / in.	CHECKED - JB	REVISED -	
PLOT DATE = 11/12/2021	DATE - 2021/07/27	REVISED -	

STATE OF ILLINOIS
DEPARTMENT OF TRANSPORTATION

FAI 270 TRAFFIC CONTROL PLAN
PHASE 1D

SCALE: 1" = 50' | SHEET 7 OF 9 SHEETS | STA. 1844+50.00 TO STA. 1874+00.00

F.A. RTE.	SECTION	COUNTY	TOTAL SHEETS	SHEET NO.
270	60B-1	MADISON	860	100

CONTRACT NO. 76J90
ILLINOIS | FED. AID PROJECT