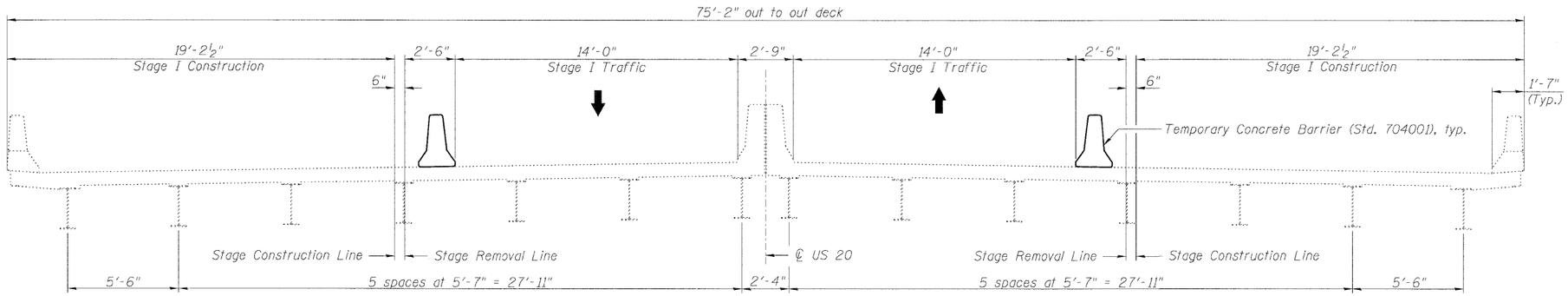

STAGE I REMOVAL & CONSTRUCTION

(Looking East)

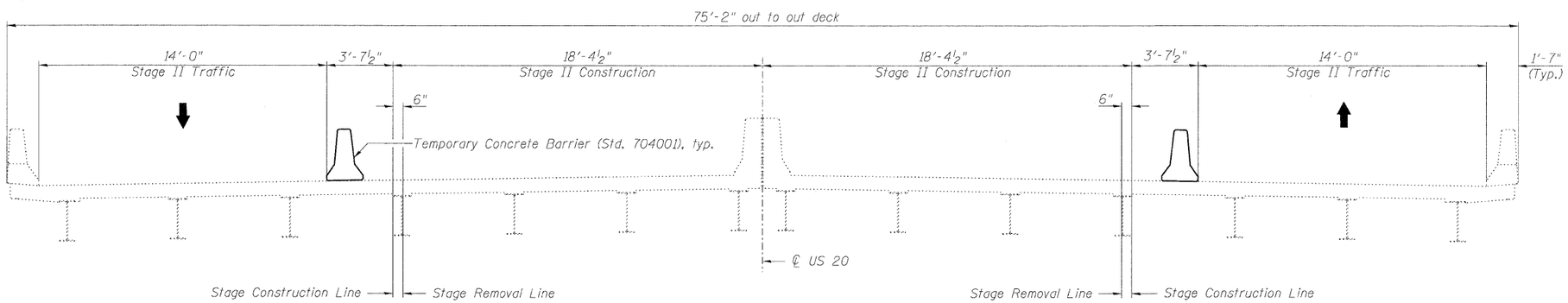

STAGE II REMOVAL & CONSTRUCTION

(Looking East)

LIN ENGINEERING, LTD. Consulting Engineers Chatham, Illinois	USER NAME =	DESIGNED - TBP	REVISED -	STATE OF ILLINOIS DEPARTMENT OF TRANSPORTATION	STAGE CONSTRUCTION DETAILS STRUCTURE NO. 016-0217	F.A.P. RTE.	SECTION	COUNTY	TOTAL SHEETS / SHEET NO.
	FILE NAME =	CHECKED - ADB	REVISED -			345	8R-1-RS-4	COOK	124 / 91
	PLOT SCALE =	DRAWN - AJF	REVISED -					CONTRACT NO. 60M46	
	PLOT DATE =	CHECKED - MTH	REVISED -		SHEET NO. 2 OF 4 SHEETS			ILLINOIS FED. AID PROJECT	