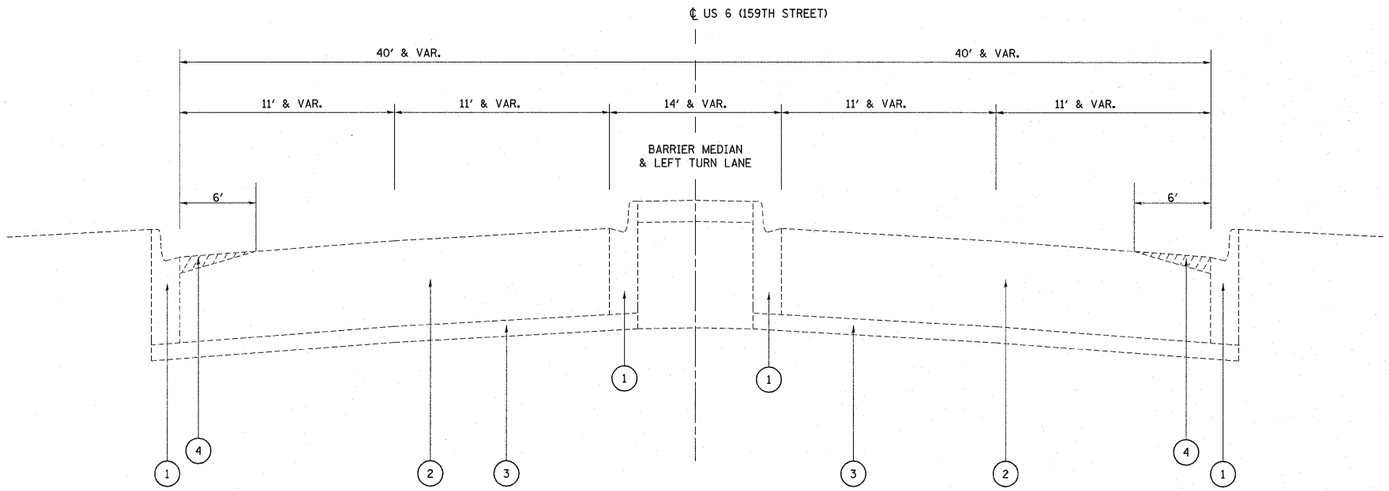

EXISTING TYPICAL CROSS SECTION

US 6/ 159TH STREET (I-94 TO ILL 83)

STA. 9+88 TO STA. 66+98.06

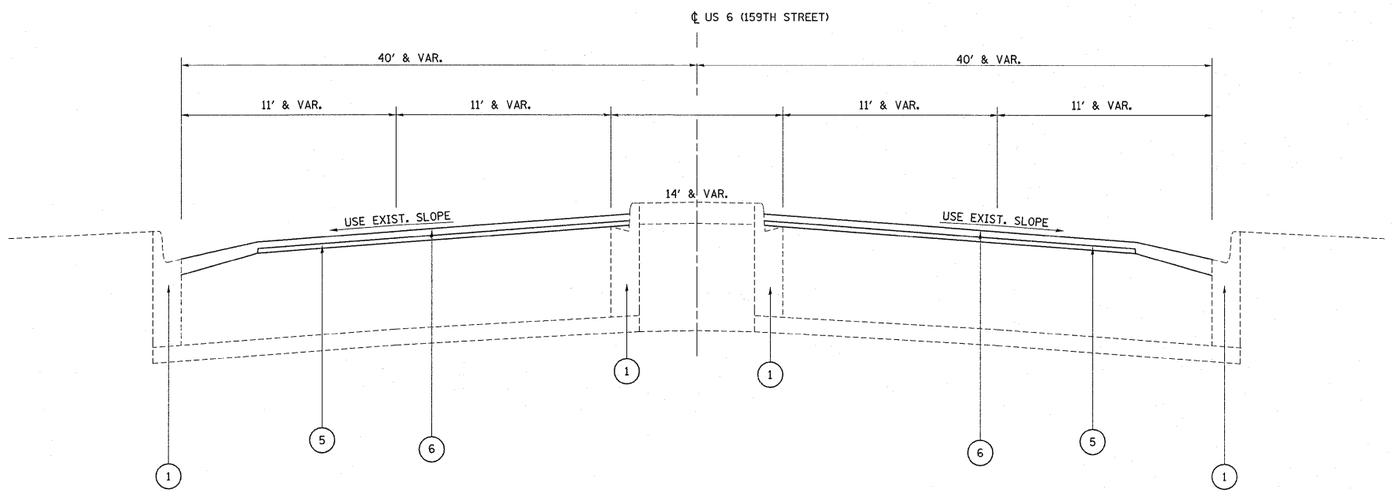

PROPOSED TYPICAL CROSS SECTION

US 6/ 159TH STREET (I-94 TO ILL 83)

STA. 9+88 TO STA. 66+98.06

LEGEND

1. EXISTING COMBINATION CONCRETE CURB AND GUTTER
2. EXISTING P.C. CONCRETE PAVEMENT ± 9"
3. EXISTING STABILIZED SUB-BASE, 4 "
4. PROP. P.C.C. SURFACE REMOVAL (VARIABLE DEPTH)
5. PROPOSED POLYMERIZED LEVELING BINDER (MACHINE METHOD), IL-4.75, N50 (3/4")
6. PROPOSED POLYMERIZED HMA SURFACE COURSE, MIX "F", N90 (1 3/4 ")

FILE NAME = c:\pw_work\pwidot\guillaumefp\d0188275\D152610-sht-plan.dgn	USER NAME = guillaumefp	DESIGNED -	REVISED -	STATE OF ILLINOIS DEPARTMENT OF TRANSPORTATION	US 6 (159TH ST) (I-94 TO ILL 83) TYPICAL SECTIONS	F.A.P RTE.	SECTION	COUNTY	TOTAL SHEETS	SHEET NO.
		DRAWN -	REVISED -			351	539 W-1-RS	COOK	56	6
	PLOT SCALE = 50.0001 ' / IN.	CHECKED -	REVISED -					CONTRACT NO.60K57		
	PLOT DATE = 4/12/2011	DATE -	REVISED -		SCALE: SHEET NO. OF SHEETS STA. TO STA.	FED. ROAD DIST. NO. 1	ILLINOIS	FED. AID PROJECT		