06-16-2023 LETTING ITEM 136

F.A.I. RTE.	SECTION	COUNTY	TOTAL SHEETS	SHEET NO.
57	(10-30)BR	CHAMPAIGN	107*	1
	ILLINOIS	CONTRACT NO. 70A87		

* 107 TOTAL SHEETS

STATE OF ILLINOIS
DEPARTMENT OF TRANSPORTATION

FOR INDEX OF SHEETS, SEE SHEET 2

PROJECT LOCATED IN PESOTUM TOWNSHIP

PROPOSED HIGHWAY PLANS

FAI ROUTE 57 (I–57)
SECTION (10–30)BR
PROJECT COVD-9XHW(312)

SUPERSTRUCTURE REPLACEMENT
CHAMPAIGN COUNTY

C–95–064–22

I–57 OVER US 45 AT PESOTUM
RANGE 8 EAST 3rd P.M.

FAI 57 SECTION (10–30)BR
BK. ABUT. STA. 119 + 14.96

EXISTING SN 010–0198 & 010–0199 AT STA 118 + 50
CARRYING I–57 OVER US 45
SUPERSTRUCTURE REPLACEMENT
PROPOSED 27" STEEL I BEAM
3 SPAN INTEGRAL ABUTMENTS

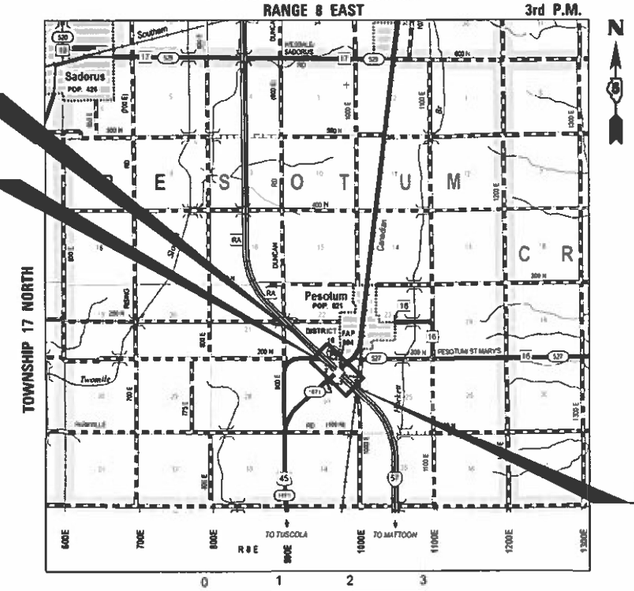

FAI 57 SECTION (10–30)BR
BK. ABUT. STA. 117 + 85.02

GROSS / NET LENGTH = 1,368.19 FT. = 0.259 MILE

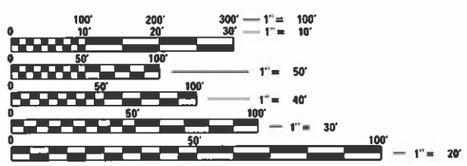

FULL SIZE PLANS HAVE BEEN PREPARED USING STANDARD ENGINEERING SCALES. REDUCED SIZED PLANS WILL NOT CONFORM TO STANDARD SCALES. IN MAKING MEASUREMENTS ON REDUCED PLANS, THE ABOVE SCALES MAY BE USED.

J.U.L.I.E.
JOINT UTILITY LOCATION INFORMATION FOR EXCAVATORS
1–800–892–0123
OR 811
PESOTUM TOWNSHIP

PROJECT ENGINEER JASON W. STULTS, P.E.
SQUAD LEADER DAVID E. JAYME, P.E.
PHONE 217–465–4181

CONTRACT NO. 70A87

P-95-009-21

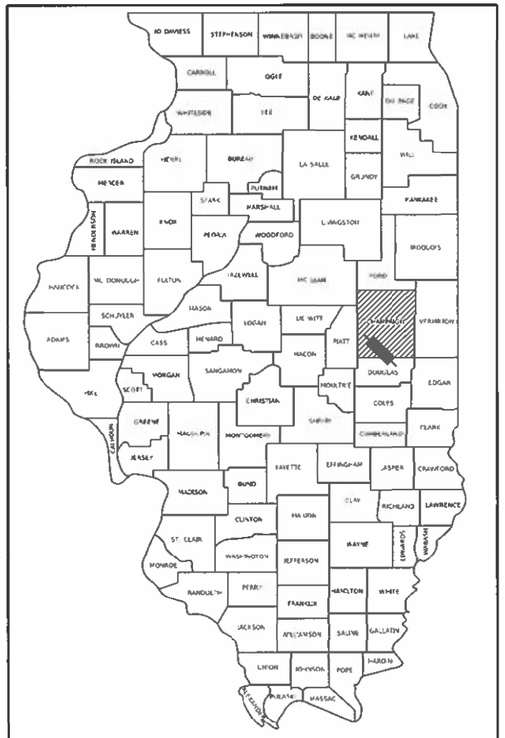

LOCATION OF SECTION INDICATED THUS:–

FUNCTIONAL CLASSIFICATION
INTERSTATE

2021 ADT = 11,900
P.V. = 64.7% S.U. = 2.5% M.U. = 32.8%

STATE OF ILLINOIS
DEPARTMENT OF TRANSPORTATION

SUBMITTED 3/27 2023
Kensil A. Garnett
REGIONAL ENGINEER

May 12, 2023
ENGINEER OF DESIGN AND ENVIRONMENT

May 12, 2023
Stephen M. Travis
DIRECTOR OF HIGHWAYS PROJECT IMPLEMENTATION

LICENSED PROFESSIONAL ENGINEER ERIC J. LINDEMANN NO. 062-051170 STATE OF ILLINOIS

March 24 2023

ERIC J. LINDEMANN
ILLINOIS REG. PROFESSIONAL ENGINEER NO. 062-051170
EXPIRATION DATE 11-30-2023
SHEETS 1-29, 31-36, 79-107

Kaskaskia Engineering Group, LLC
PROFESSIONAL REGISTRATIONS LICENSE NO.
Illinois Professional Design Firm 184-001773
Professional Engineering Group 20-1000086

PRINTED BY THE AUTHORITY OF THE STATE OF ILLINOIS

REV. 4/28/23 REV. 4/21/23

INDEX OF SHEETS

HIGHWAY STANDARDS

000001-08	STANDARD SYMBOLS, ABBREVIATIONS AND PATTERNS
001001-02	AREAS OF REINFORCEMENT BARS
001006	DECIMAL OF AN INCH AND OF A FOOT
280001-07	TEMPORARY EROSION CONTROL SYSTEMS
420401-13	PAVEMENT CONNECTOR (PCC) FOR BRIDGE APPROACH SLAB
515001-04	NAME PLATE FOR BRIDGES
542001-06	CONCRETE END SECTIONS FOR PIPE CULVERTS, 15" THRU 84" DIA.
542201-02	REINFORCED CONCRETE END SECTIONS FOR PIPE CULVERTS, 15" THRU 36" DIA., SKEWED WITH ROADWAY
542311-07	TRAVERSABLE PIPE GRATE FOR CONCRETE END SECTIONS
542401-04	METAL FLARED END SECTION FOR PIPE CULVERTS
601001-05	PIPE UNDERDRAINS
601101-02	CONCRETE HEADWALL FOR PIPE UNDERDRAINS
610001-09	SHOULDER INLET WITH CURB
630001-12	STEEL PLATE BEAM GUARDRAIL
630301-09	SHOULDER WIDENING FOR TYPE 1 (SPECIAL) GUARDRAIL TERMINALS
631031-18	TRAFFIC BARRIER TERMINAL, TYPE 6
631033-09	TRAFFIC BARRIER TERMINAL, TYPE 6B
642001-03	SHOULDER RUMBLE STRIPS, 16 IN.
666001-01	RIGHT OF WAY MARKERS
667101-02	PERMANENT SURVEY MARKERS
701006-05	OFF-RD OPERATIONS, 2L, 2W, 15' (4.5m) TO 24" (600mm) FROM PAVEMENT EDGE
701101-05	OFF-RD OPERATIONS, MULTILANE, 15' (4.5m) TO 24" (600mm) FROM PAVEMENT EDGE
701106-02	OFF-RD OPERATIONS, MULTILANE, MORE THAN 15' (4.5m) AWAY
701400-11	APPROACH TO LANE CLOSURE, FREEWAY/EXPRESSWAY
701402-12	LANE CLOSURE, FREEWAY/EXPRESSWAY, WITH BARRIER
701406-13	LANE CLOSURE, FREEWAY/EXPRESSWAY, DAY OPERATIONS ONLY
701411-09	LANE CLOSURE, MULTILANE, AT ENTRANCE OR EXIT RAMP, FOR SPEEDS ≥ 45 MPH
701428-01	TRAFFIC CONTROL, SETUP AND REMOVAL, FREEWAY/EXPRESSWAY
701901-08	TRAFFIC CONTROL DEVICES
704001-08	TEMPORARY CONCRETE BARRIER
725001-01	OBJECT AND TERMINAL MARKERS
781001-04	TYPICAL APPLICATIONS RAISED REFLECTIVE PAVEMENT MARKERS
782006-01	GUARDRAIL AND BARRIER WALL REFLECTOR MOUNTING DETAILS
836001-04	LIGHT POLE FOUNDATION

DISTRICT GENERAL NOTES

GN-100B MICROSTATION AND GEOPAK FILES OF THIS PROJECT WILL BE MADE AVALIABLE TO THE CONTRACTOR AFTER CONTRACT AWARD. IF THERE IS A CONFLICT BETWEEN THE ELECTRONIC FILES AND THE PRINTED CONTRACT PLANS AND DOCUMENTS, THE PRINTED CONTRACT PLANS AND DOCUMENTS SHALL TAKE PRECEDENCE OVER THE ELECTRONIC FILES. THE CONTRACTOR SHALL ACCEPT ALL RISK ASSOCIATED WITH USING THE ELECTRONIC FILES AND SHALL HOLD THE DEPARTMENT HARMLESS FOR ANY ERRORS OR OMISSIONS IN THE ELECTRONIC FILES AND THE DATA CONTAINED THEREIN. ERRORS OR DELAYS RESULTING FROM THE USE OF ELECTRONIC FILES BY THE CONTRACTOR SHALL NOT RESULT IN AN EXTENSION OF TIME FOR ANY INTERIM OR FINAL COMPLETION DATE OR SHALL NOT BE CONSIDERED CAUSE FOR ADDITIONAL COMPENSATION. THE CONTRACTOR SHALL NOT USE, SHARE, OR DISTRIBUTE THESE ELECTRONIC FILES EXCEPT FOR THE PURPOSE OF CONSTRUCTING THIS CONTRACT. ANY CLAIMS BY THIRD PARTIES DUE TO USE OR ERRORS SHALL BE THE SOLE RESPONSIBILITY OF THE CONTRACTOR. THE CONTRACTOR SHALL INCLUDE THIS DISCLAIMER WITH THE TRANSFER OF THESE ELECTRONIC FILES TO ANY OTHER PARTIES AND SHALL INCLUDE APPROPRIATE LANGUAGE BINDING THEM TO SIMILAR RESPONSIBILITIES.

GN-105.09A ALL ELEVATIONS SHOWN IN THE PLANS ARE BASED ON NORTH AMERICAN VERTICAL DATUM OF 1988 (NAVD 88).

GN-201 TREES THAT INTERFERE WITH THE CONSTRUCTION OPERATIONS SHALL BE REMOVED AS DIRECTED BY THE ENGINEER. ANY TREE DUE TO ITS LOCATION AND DEEMED SUITABLE FOR SAVING BY THE ENGINEER SHALL BE PROTECTED DURING CLEARING AND SUBSEQUENT CONSTRUCTION OPERATIONS.

GN-205 BENCHING PROCEDURES SHALL BE USED IN AREAS WHERE EXISTING EMBANKMENTS ARE WIDENED FOR THE PROPOSED PAVEMENT. STEPS SHALL BE CUT INTO THE EXISTING EMBANKMENT SLOPES AND SHALL HAVE THE FOLLOWING DIMENSIONS:
HORIZONTAL: VARIES
VERTICAL: 4 FOOT

GN-703A SHORT TERM PAVEMENT MARKING SHALL BE APPLIED TO THE PAVEMENT AFTER ANY OF THE FOLLOW: COLD MILLING AND/OR PLACING BITUMINOUS MATERIALS (TACK COAT), LEVELING BINDER (MACHINE METHOD), BINDER AND SURFACE COURCES, SHORT TERM PAVEMENT MARKING PLACED ON THE SURFACE SHALL COINCIDE WITH THE FINAL PAVEMENT STRIPING. SHORT TERM PAVEMENT MARKING PLACED PRIOR TO THE SURFACE SHALL COINCIDE WITH THE EXISTING PAVEMENT MARKINGS. USE 4 FEET PER 40 FEET (OR 10% PER STATION).

COMMITMENTS

NONE

APPLICATION RATES

THE FOLLOWING RATES OF APPLICATION WERE UTILIZED TO CALCULATE CONTRACT QUANTITIES:

AGGREGATE SHOULDERS, TYPE B	1.80 TON/CY
BITUMINOUS MATERIALS - TACK COAT	0.05 LB/SF
BITUMINOUS MATERIALS - PRIME COAT	0.025 LB/SF
HOT-MIX ASPHALT SURFACE/BINDER/BASE	112 LB/SY PER INCH
NITROGEN FERTILIZER NUTRIENT	90 LB/ACRE
PHOSPHORUS FERTILIZER NUTRIENT	90 LB/ACRE
POTASSIUM FERTILIZER NUTRIENT	90 LB/ACRE
TEMPORARY EROSION CONTROL SEEDING	100 LB/ACRE

GN-406H

HMA MIXTURE REQUIREMENT TABLE

LOCATION(S):	I-57	I-57	I-57	I-57	I-57
MIXTURE USE(S):	SURFACE (MAINLINE)	BINDER (TOP 2¼" MAINLINE)	BINDER (BOTTOM 11" MAINLINE)	SURFACE (TOP 1½" SHLDR)	BINDER (BOTTOM 6½" SHLDR)
BINDER GRADE (AC/PG):	SBS PG 76-28	SBS PG 76-28	PG 64-22	PG 64-22	PG 64-22
DESIGN AIR VOIDS:	4.0% @ Ndes=90	4.0% @ Ndes=90	4.0% @ Ndes=90	4.0% @ Ndes=50	4.0% @ Ndes=50
MIXTURE COMPOSITION: (MIXTURE GRADATION)	IL-9.5	IL-19.0	IL-19.0	IL-9.5	IL-19.0
FRICTION AGGREGATE:	MIXTURE "D"	N/A	N/A	MIXTURE "C"	N/A
MIXTURE WEIGHT:	112 LB/SQ YD/IN	112 LB/SQ YD/IN	112 LB/SQ YD/IN	112 LB/SQ YD/IN	112 LB/SQ YD/IN
QUALITY MANAGEMENT PROGRAM:	QC/QA	QC/QA	QC/QA	QC/QA	QC/QA
SUBLOT SIZE:	3000	3000	3000	3000	3000
MATERIAL TRANSFER DEVICE (REQUIRED?)	YES	YES	YES	YES	YES

CODE NO.	ITEM	UNIT	TOTAL QUANTITY	FAI 57 CHAMPAIGN COUNTY 100% FEDERAL BRIDGE 0013 RURAL
20100110	TREE REMOVAL (6 TO 15 UNITS DIAMETER)	UNIT	136	136
20100210	TREE REMOVAL (OVER 15 UNITS DIAMETER)	UNIT	104	104
20200100	EARTH EXCAVATION	CU YD	274	274
20400800	FURNISHED EXCAVATION	CU YD	10,512	10,512
20600110	GRANULAR EMBANKMENT, SPECIAL	TON	1,533	1,533
25000210	SEEDING, CLASS 2A	ACRE	4	4
25000350	SEEDING, CLASS 7	ACRE	4	4
25000400	NITROGEN FERTILIZER NUTRIENT	POUND	349	349
25000500	PHOSPHORUS FERTILIZER NUTRIENT	POUND	349	349
25000600	POTASSIUM FERTILIZER NUTRIENT	POUND	349	349
25100125	MULCH, METHOD 3	ACRE	4	4
25100630	EROSION CONTROL BLANKET	SQ YD	1,600	1,600
28000250	TEMPORARY EROSION CONTROL SEEDING	POUND	388	388
28000305	TEMPORARY DITCH CHECKS	FOOT	552	552

* = SPECIALTY ITEM

CODE NO.	ITEM	UNIT	TOTAL QUANTITY	FAI 57 CHAMPAIGN COUNTY 100% FEDERAL BRIDGE 0013 RURAL
28000400	PERIMETER EROSION BARRIER	FOOT	1,795	1,795
28000500	INLET AND PIPE PROTECTION	EACH	3	3
28100107	STONE RIPRAP, CLASS A4	SQ YD	186	186
28200200	FILTER FABRIC	SQ YD	186	186
40600275	BITUMINOUS MATERIALS (PRIME COAT)	POUND	14,005	14,005
40600290	BITUMINOUS MATERIALS (TACK COAT)	POUND	2,801	2,801
40600372	LONGITUDINAL JOINT SEALANT, HALF-WIDTH	FOOT	4,616	4,616
40600982	HOT-MIX ASPHALT SURFACE REMOVAL - BUTT JOINT	SQ YD	889	889
40603090	HOT-MIX ASPHALT BINDER COURSE, IL-19.0, N90	TON	2,328	2,328
40603219	POLYMERIZED HOT-MIX ASPHALT BINDER COURSE, IL-9.5FG, N90	TON	863	863
40604114	POLYMERIZED HOT-MIX ASPHALT SURFACE COURSE, IL-9.5FG, MIX "D", N90	TON	517	517
42000080	PAVEMENT CONNECTOR (PCC) FOR BRIDGE APPROACH SLAB	SQ YD	293	293
44000155	HOT-MIX ASPHALT SURFACE REMOVAL, 1 1/2"	SQ YD	1,054	1,054
44000168	HOT-MIX ASPHALT SURFACE REMOVAL, 4 3/4"	SQ YD	866	866

* = SPECIALTY ITEM

MODEL: SOQ Sheet 2
FILE NAME: P:\18-1072.03 I-57 over US 45 Ph2\18-1072.03-dgn\CAD_Sheets\D370\A87-4th-SOQ.dgn

Kaskaskia Engineering Group, LLC
PROFESSIONAL REGISTRATIONS: Illinois Professional Design Firm 184.004773; Professional Engineering Group 20-3500586
LICENSE NO.

USER NAME = jwarner	DESIGNED -	REVISED -	
	DRAWN -	REVISED -	
PLOT SCALE = 0.16666633 ' / in.	CHECKED -	REVISED -	
PLOT DATE = 3/24/2023	DATE -	REVISED -	

STATE OF ILLINOIS
DEPARTMENT OF TRANSPORTATION

FAI 57 (I–57)
SUMMARY OF QUANTITIES

SCALE: SHEET 2 OF 9 SHEETS STA. TO STA.

F.A.I. RTE.	SECTION	COUNTY	TOTAL SHEETS	SHEET NO.
57	(10-30)BR	CHAMPAIGN	107	4

CONTRACT NO. 70A87
ILLINOIS FED. AID PROJECT

REV. 5/19/23 REV. 4/28/23

CODE NO.	ITEM	UNIT	TOTAL QUANTITY	FAI 57 CHAMPAIGN COUNTY 100% FEDERAL BRIDGE 0013 RURAL
48101200	AGGREGATE SHOULDERS, TYPE B	TON	713	713
48203100	HOT-MIX ASPHALT SHOULDERS	TON	3,474	3,474
50101500	REMOVAL OF EXISTING SUPERSTRUCTURES	EACH	2	2
50102400	CONCRETE REMOVAL	CU YD	37.4	37.4
50157300	PROTECTIVE SHIELD	SQ YD	403	403
50200100	STRUCTURE EXCAVATION	CU YD	477	477
50300225	CONCRETE STRUCTURES	CU YD	223.8	223.8
50300255	CONCRETE SUPERSTRUCTURE	CU YD	414.0	414.0
50300300	PROTECTIVE COAT	SQ YD	1,923	1,923
50301350	CONCRETE SUPERSTRUCTURE (APPROACH SLAB)	CU YD	239.4	239.4
50500105	FURNISHING AND ERECTING STRUCTURAL STEEL	L SUM	1	1
50500505	STUD SHEAR CONNECTORS	EACH	10,248	10,248
50800205	REINFORCEMENT BARS, EPOXY COATED	POUND	213,000	213,000
50800515	BAR SPLICERS	EACH	1,458	1,458

* = SPECIALTY ITEM

CODE NO.	ITEM	UNIT	TOTAL QUANTITY	FAI 57 CHAMPAIGN COUNTY 100% FEDERAL BRIDGE 0013 RURAL
51500100	NAME PLATES	EACH	2	2
52100010	ELASTOMERIC BEARING ASSEMBLY, TYPE I	EACH	28	28
52100505	ANCHOR BOLTS, 5/8"	EACH	56	56
52100520	ANCHOR BOLTS, 1"	EACH	56	56
52200010	TEMPORARY SHEET PILING	SQ FT	962	962
54213447	END SECTIONS 12"	EACH	4	4
54213459	END SECTIONS 24"	EACH	1	1
54213471	END SECTIONS 36"	EACH	2	2
54248510	CONCRETE COLLAR	CU YD	2	2
542A0241	PIPE CULVERTS, CLASS A, TYPE 1 36"	FOOT	7	7
542D0229	PIPE CULVERTS, CLASS D, TYPE 1 24"	FOOT	13	13
58600101	GRANULAR BACKFILL FOR STRUCTURES	CU YD	290	290
58700300	CONCRETE SEALER	SQ FT	644	644
59100100	GEOCOMPOSITE WALL DRAIN	SQ YD	195	195

* = SPECIALTY ITEM

MODEL: SOQ Sheet 4
FILE NAME: P:\18-1072.03 I-57 over US 45 Ph2\18-1072.03-dgn\CAD_Sheets\D370\A87-sht-SOQ.dgn

Kaskaskia Engineering Group, LLC
PROFESSIONAL REGISTRATIONS
Illinois Professional Design Firm 184.004773
Professional Engineering Group 20-3500586
LICENSE NO.
209 E. Main St., Suite 300
Belleville, Illinois 62220
ph. 618.233.5672 phone
618.233.5675 fax
www.kaskaskiaeng.com

USER NAME = jwarner	DESIGNED -	REVISED -	
	DRAWN -	REVISED -	
PLOT SCALE = 0.16666633 ' / in.	CHECKED -	REVISED -	
PLOT DATE = 3/24/2023	DATE -	REVISED -	

STATE OF ILLINOIS
DEPARTMENT OF TRANSPORTATION

FAI 57 (I-57)
SUMMARY OF QUANTITIES

SCALE: SHEET 4 OF 9 SHEETS STA. TO STA.

F.A.I. RTE.	SECTION	COUNTY	TOTAL SHEETS	SHEET NO.
57	(10-30)BR	CHAMPAIGN	107	6
		CONTRACT NO. 70A87		
		ILLINOIS	FED. AID PROJECT	

	CODE NO.	ITEM	UNIT	TOTAL QUANTITY	FAI 57 CHAMPAIGN COUNTY 100% FEDERAL BRIDGE 0013 RURAL
	60100060	CONCRETE HEADWALLS FOR PIPE DRAINS	EACH	9	9
	60100945	PIPE DRAINS 12"	FOOT	175	175
	60108100	PIPE UNDERDRAINS 4" (SPECIAL)	FOOT	205	205
	60146304	PIPE UNDERDRAINS FOR STRUCTURES 4"	FOOT	245	245
	60260100	INLETS TO BE ADJUSTED	EACH	1	1
	61000050	CONCRETE THRUST BLOCKS	EACH	4	4
	61000225	TYPE F INLET BOX, STANDARD 610001	EACH	2	2
	61000335	TYPE G INLET BOX, STANDARD 610001	EACH	2	2
*	63000001	STEEL PLATE BEAM GUARDRAIL, TYPE A, 6 FOOT POSTS	FOOT	1,806	1,806
*	63100085	TRAFFIC BARRIER TERMINAL, TYPE 6	EACH	4	4
*	63100167	TRAFFIC BARRIER TERMINAL, TYPE 1 (SPECIAL) TANGENT	EACH	8	8
	63200310	GUARDRAIL REMOVAL	FOOT	2,067	2,067
	64200116	SHOULDER RUMBLE STRIPS, 16 INCH	FOOT	4,611	4,611
	66201120	CONCRETE SHOULDER CURB	FOOT	66	66
*	66900530	SOIL DISPOSAL ANALYSIS	EACH	1	1

CON

* = SPECIALTY ITEM

MODEL: SOQ Sheet 5
FILE NAME: P:\18-1072.03-I-57 over US 45 Ph2\18-1072.03-sgn\CAD_Sheets\D370\A87-sht-SOQ.dgn

Kaskaskia Engineering Group, LLC
PROFESSIONAL REGISTRATIONS: Illinois Professional Design Firm 184.004773; Professional Engineering Group 20-5500586
LICENSE NO.
201 E. Main St., Suite 300, Belleville, Illinois 62220
618.233.5672 phone
www.kaskaskia-eng.com

USER NAME = jwarner	DESIGNED -	REVISED -
	DRAWN -	REVISED -
PLOT SCALE = 0.16666633 ' / in.	CHECKED -	REVISED -
PLOT DATE = 3/24/2023	DATE -	REVISED -

STATE OF ILLINOIS
DEPARTMENT OF TRANSPORTATION

FAI 57 (I–57)
SUMMARY OF QUANTITIES

SCALE: SHEET 5 OF 9 SHEETS STA. TO STA.

F.A.I. RTE.	SECTION	COUNTY	TOTAL SHEETS	SHEET NO.
57	(10-30)BR	CHAMPAIGN	107	7
		CONTRACT NO. 70A87		
		ILLINOIS	FED. AID PROJECT	

REV. 5/19/23 REV. 4/28/23

	CODE NO.	ITEM	UNIT	TOTAL QUANTITY	FAI 57 CHAMPAIGN COUNTY 100% FEDERAL BRIDGE 0013 RURAL
*	66901001	REGULATED SUBSTANCES PRE-CONSTRUCTION PLAN	L SUM	1	1
*	66901003	REGULATED SUBSTANCES FINAL CONSTRUCTION REPORT	L SUM	1	1
*	66901006	REGULATED SUBSTANCES MONITORING	CAL DA	8	8
	67000500	ENGINEER'S FIELD OFFICE, TYPE B	CAL MO	12	12
	67100100	MOBILIZATION	L SUM	1	1
	70103815	TRAFFIC CONTROL SURVEILLANCE	CAL DA	180	180
	70107006	PAVEMENT MARKING BLACKOUT TAPE, 6"	FOOT	6,170	6,170
	70107025	CHANGEABLE MESSAGE SIGN	CAL DA	56	56
	70300241	TEMPORARY PAVEMENT MARKING - LINE 6" - PAINT	FOOT	22,067	22,067
	70400100	TEMPORARY CONCRETE BARRIER	FOOT	3,291	3,291
	70400200	RELOCATE TEMPORARY CONCRETE BARRIER	FOOT	3,165	3,165
	70600250	IMPACT ATTENUATORS, TEMPORARY (NON- REDIRECTIVE), TEST LEVEL 3	EACH	2	2
	70600350	IMPACT ATTENUATORS, RELOCATE (NON- REDIRECTIVE), TEST LEVEL 3	EACH	2	2
*	72501000	TERMINAL MARKER - DIRECT APPLIED	EACH	4	4

* = SPECIALTY ITEM

MODEL: SOQ Sheet 6
FILE NAME: P:\18-1072.03 I-57 over US 45 Ph2\18-1072.03-dgn\CAD_Sheets\D370\A87-sht-SOQ.dgn

Kaskaskia Engineering Group, LLC
PROFESSIONAL REGISTRATIONS: Illinois Professional Design Firm 184.004773; Professional Engineering Group 20-5500586
LICENSE NO.

USER NAME = jwarner	DESIGNED -	REVISED -	STATE OF ILLINOIS DEPARTMENT OF TRANSPORTATION
	DRAWN -	REVISED -	
PLOT SCALE = 0.16666633 ' / in.	CHECKED -	REVISED -	
PLOT DATE = 3/24/2023	DATE -	REVISED -	

FAI 57 (I-57)
SUMMARY OF QUANTITIES

SCALE: SHEET 6 OF 9 SHEETS STA. TO STA.

F.A.I. RTE.	SECTION	COUNTY	TOTAL SHEETS	SHEET NO.
57	(10-30)BR	CHAMPAIGN	107	8
		CONTRACT NO. 70A87		
		ILLINOIS FED. AID PROJECT		

REV. 4/28/23

	CODE NO.	ITEM	UNIT	TOTAL QUANTITY	FAI 57 CHAMPAIGN COUNTY 100% FEDERAL BRIDGE 0013 RURAL
*	78008330	POLYUREA PAVEMENT MARKING TYPE II - LINE 6"	FOOT	6,170	6,170
*	78011035	GROOVING FOR RECESSED PAVEMENT MARKING 7"	FOOT	6,170	6,170
*	78100100	RAISED REFLECTIVE PAVEMENT MARKER	EACH	68	68
*	78200005	GUARDRAIL REFLECTORS, TYPE A	EACH	24	24
*	78200011	BARRIER WALL REFLECTORS, TYPE C	EACH	258	258
	78300200	RAISED REFLECTIVE PAVEMENT MARKER REMOVAL	EACH	68	68
*	80300100	LOCATING UNDERGROUND CABLE	FOOT	320	320
*	81028350	UNDERGROUND CONDUIT, PVC, 2" DIA	FOOT	700	700
*	81400100	HANDHOLE	EACH	3	3
*	87300901	ELECTRIC CABLE IN CONDUIT, TRACER, NO. 12 1C	FOOT	350	350
*	87800415	CONCRETE FOUNDATION, TYPE E 36-INCH DIAMETER	FOOT	1	1
*	87900200	DRILL EXISTING HANDHOLE	EACH	1	1
*	X0324597	CLOSED CIRCUIT TELEVISION CABINET	EACH	1	1
*	X8710103	ETHERNET SWITCH	EACH	1	1

* = SPECIALTY ITEM

	CODE NO.	ITEM	UNIT	TOTAL QUANTITY	FAI 57 CHAMPAIGN COUNTY 100% FEDERAL BRIDGE 0013 RURAL
*	X0326905	CLOSED CIRCUIT TELEVISION DOME CAMERA, IP BASED	EACH	1	1
*	X0327640	REAL-TIME TRAFFIC CONTROL CENTRAL BASE UNIT	CAL MO	12	12
*	X0328005	REAL-TIME TRAFFIC MONITORING SENSOR UNIT	CAL MO	192	192
*	X0328006	REAL-TIME TRAFFIC CONTROL WARNING SIGN	CAL MO	96	96
*	X1400006	FIBER OPTIC CABLE IN CONDUIT, 12 FIBERS, SINGLE MODE	FOOT	10	10
*	X1400103	ROAD WEATHER INFORMATION SYSTEM, COMPLETE	L SUM	1	1
*	X1400127	CAT. 6 ETHERNET CABLE	FOOT	55	55
*	X1400174	REMOVE AND REINSTALL EXISTING CCTV CAMERA AND EQUIPMENT	L SUM	1	1
	X2700001	TEMPORARY RUMBLE STRIPS (SPECIAL)	EACH	16	16
	X5030250	BRIDGE DECK GROOVING (LONGITUDINAL)	SQ YD	968	968
	X6015000	REMOVE CONCRETE HEADWALLS FOR PIPE DRAINS	EACH	9	9
*	X6311217	TRAFFIC BARRIER TERMINAL, TYPE 6B (SPECIAL)	EACH	8	8
	X7010216	TRAFFIC CONTROL AND PROTECTION (SPECIAL)	L SUM	1	1
	X7200201	WIDTH RESTRICTION SIGNING	L SUM	1	1

* = SPECIALTY ITEM

MODEL: SOQ Sheet 8
FILE NAME: P:\18-1072.03 I-57 over US 45 Ph2\18-1072.03-sgn\CAD_Sheets\D370\A87-sht-SOQ.dgn

Kaskaskia Engineering Group, LLC
PROFESSIONAL REGISTRATIONS
Illinois Professional Design Firm 184.004773
Professional Engineering Group 20-3500586
LICENSE NO.
USER NAME = jwarner

PLOT SCALE = 0.16666633 ' / in.	DESIGNED -	REVISED -	
	DRAWN -	REVISED -	
	CHECKED -	REVISED -	
PLOT DATE = 3/24/2023	DATE -	REVISED -	

STATE OF ILLINOIS
DEPARTMENT OF TRANSPORTATION

FAI 57 (I-57)
SUMMARY OF QUANTITIES

SCALE: SHEET 8 OF 9 SHEETS STA. TO STA.

F.A. I. RTE.	SECTION	COUNTY	TOTAL SHEETS	SHEET NO.
57	(10-30)BR	CHAMPAIGN	107	10
		CONTRACT NO. 70A87		
		ILLINOIS	FED. AID PROJECT	

	CODE NO.	ITEM	UNIT	TOTAL QUANTITY	FAI 57 CHAMPAIGN COUNTY 100% FEDERAL BRIDGE 0013 RURAL
*	X8300355	CAMERA POLE, 55 FT	EACH	1	1
*	X8710052	FIBER OPTIC TERMINATION PANEL, 12 FIBER, FO TERM PANEL 12F	EACH	1	1
*	X8710071	FIBER OPTIC FUSION SPLICE	EACH	2	2
*	X8730105	ELECTRIC CABLE IN CONDUIT, SIGNAL NO. 10 3C	FOOT	350	350
	Z0001800	APPROACH SLAB REPAIR (PARTIAL DEPTH)	SQ YD	20.0	20.0
	Z0004552	APPROACH SLAB REMOVAL	SQ YD	693	693
	Z0004638	PAVEMENT BREAKING	SQ YD	3,522	3,522
	Z0012754	STRUCTURAL REPAIR OF CONCRETE (<OR= 5 INCHES)	SQ FT	48	48
	Z0013798	CONSTRUCTION LAYOUT	L SUM	1	1
	Z0016001	DECK SLAB REPAIR (FULL DEPTH, TYPE 1)	SQ YD	30.2	30.2
	Z0029090	DIAMOND GRINDING (BRIDGE SECTION)	SQ YD	1,716	1,716
	Z0040530	PIPE UNDERDRAIN REMOVAL	FOOT	142	142
Ø	Z0076600	TRAINEES	HOUR	1,000	1,000
Ø	Z0076604	TRAINEES - TRAINING PROGRAM GRADUATE	HOUR	1,000	1,000

* = SPECIALTY ITEM Ø 0042

MODEL: SOQ Sheet 9
FILE NAME: P:\18-1072.03 I-57 over US 45 Ph2\18-1072.03-dgn\CAD_Sheets\D370\A87-sht-SOQ.dgn

Kaskaskia Engineering Group, LLC
PROFESSIONAL REGISTRATIONS: Illinois Professional Design Firm 184.004773; Professional Engineering Group 20-5500586

USER NAME = jwarner	DESIGNED -	REVISED -	STATE OF ILLINOIS DEPARTMENT OF TRANSPORTATION
	DRAWN -	REVISED -	
PLOT SCALE = 0.16666633 ' / in.	CHECKED -	REVISED -	
PLOT DATE = 3/24/2023	DATE -	REVISED -	

FAI 57 (I-57)
SUMMARY OF QUANTITIES

SCALE: SHEET 9 OF 9 SHEETS STA. TO STA.

F.A.I. RTE.	SECTION	COUNTY	TOTAL SHEETS	SHEET NO.
57	(10-30)BR	CHAMPAIGN	107	11
		CONTRACT NO. 70A87		
		ILLINOIS	FED. AID PROJECT	

REV. 5/19/23 REV. 4/11/23

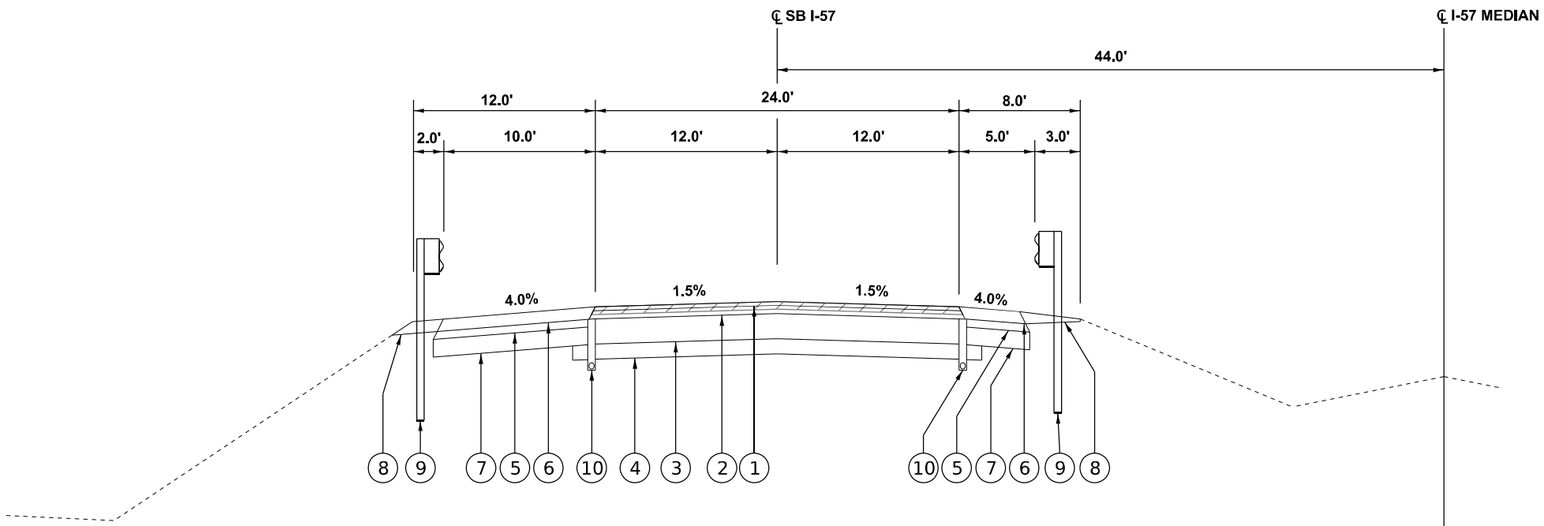

EXISTING TYPICAL SECTION

STA. 110+24.39 TO STA. 124+12.58

EX SN 010-0199 (LT) STA. 117+91 TO STA. 119+15 ±

EX SN 010-0198 (RT) STA. 117+85 TO STA. 119+09 ±

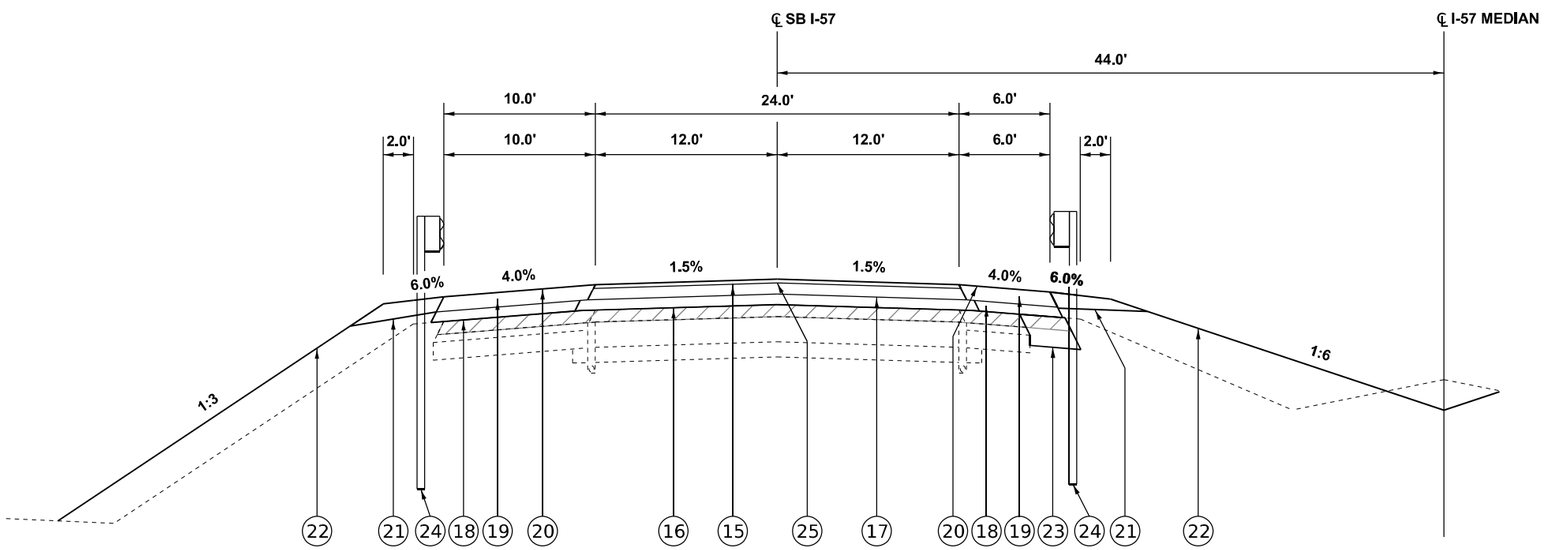

PAVEMENT BREAKING

PROPOSED TYPICAL SECTION

STA. 110+24.39 TO STA. 124+12.58

BRIDGE APPROACH SLAB (LT) STA. 117+62.46 TO STA. 117+92.46 STA. 119+13.96 TO STA. 119+43.96

BRIDGE APPROACH SLAB (RT) STA. 117+56.02 TO STA. 117+86.02 STA. 119+07.52 TO STA. 119+37.52

PR SN 010-0199 (LT) STA. 117+92.46 TO STA. 119+13.96

PR SN 010-0198 (RT) STA. 117+86.02 TO STA. 119+07.52

LEGEND

1 - EX HMA SURFACE COURSE (1 1/2")
2 - EX HMA BINDER COURSE (3 1/4")
3 - EX PCC PAVEMENT (10")
4 - EX SUB-BASE GRANULAR MATERIAL (6")
5 - EX HMA SHOULDERS (3")
6 - EX HMA SHOULDERS (4 3/4")
7 - EX STABILIZED SHOULDERS (7")
8 - EX AGGREGATE SHOULDERS
9 - EX STEEL PLATE BEAM GUARDRAIL
10 - EX PIPE UNDERDRAIN 4"

15 - PR HMA SURFACE COURSE, IL-9.5FG, MIX "D", N90 (1 1/2", 168 LBS/SQ YD)
16 - PR POLYMERIZED HMA BINDER COURSE, IL-19.0, N90 (2 1/4", 252 LBS/SQ YD)
PR HMA BINDER COURSE, IL-19.0, N90 (11", 1232 LBS/SQ YD)
17 - PR GRANULAR EMBANKMENT, SPECIAL
18 - PR SUBBASE GRANULAR MATERIAL, TYPE B
19 - PR HMA SHOULDERS, 8"
20 - PR RUMBLE STRIPS 16"
21 - PR AGGREGATE SHOULDER, TYPE B, 6"
22 - PR EMBANKMENT
23 - PR HMA SHOULDER WIDENING FOR STAGE 1 (3' WIDE)
24 - STEEL PLATE BEAM GUARDRAIL, TYPE A, 6 FOOT POSTS
25 - PR LONGITUDINAL JOINT SEALANT

*SEE BUTT JOINT DETAIL FOR HMA TAPER, HMA SURFACE REMOVAL, AND PAVEMENT BREAKING LIMITS

MODEL: Typical Sections [Sheet-I-57]
FILE NAME: P:\18-1072.03 I-57 over US 45 Ph2\18-1072.03\dgn\CAD_Sheets\D570A87-sht-Typ2-8-.dgn

Kaskaskia Engineering Group, LLC
PROFESSIONAL REGISTRATIONS
Illinois Professional Design Firm
Professional Engineering Group
LICENSE NOS.
184.004793
20-1040006
209 E. Main St., Suite 300
Belleville, IL 62220
618.233.5672 phone
618.233.5677 fax
www.kaskaskiaeng.com

USER NAME = jwarner	DESIGNED -	REVISED -
	DRAWN -	REVISED -
PLOT SCALE = 0.16666633 ' / in.	CHECKED -	REVISED -
PLOT DATE = 3/24/2023	DATE -	REVISED -

STATE OF ILLINOIS
DEPARTMENT OF TRANSPORTATION

FAI 57 (I-57)
TYPICAL SECTIONS

SCALE: | SHEET 1 OF 2 SHEETS | STA. | TO STA.

F.A.I. RTE.	SECTION	COUNTY	TOTAL SHEETS	SHEET NO.
57	(10-30)BR	CHAMPAIGN	107	12
		CONTRACT NO. 70A87		
		ILLINOIS	FED. AID PROJECT	

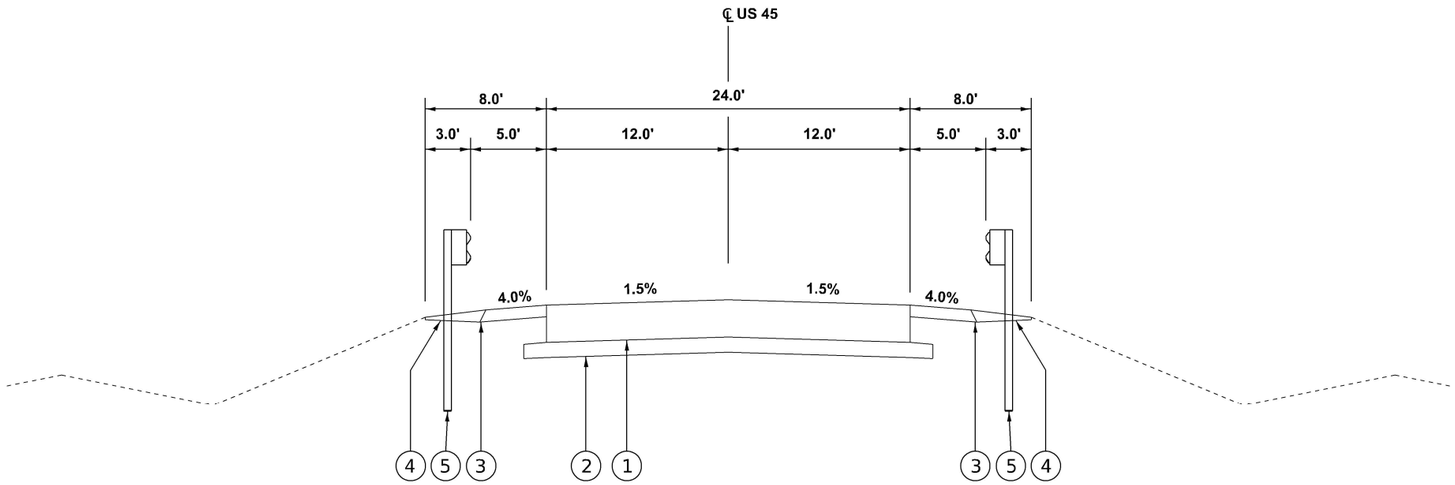

EXISTING TYPICAL SECTION

STA. 1147+85.67 TO STA. 1152+15.12

LEGEND

1 - EX PCC PAVEMENT (9")

2 - EX SUB-BASE GRANULAR MATERIAL (4")

3 - EX HMA SHOULDERS (3")

4 - EX AGGREGATE SHOULDERS

5 - EX STEEL PLATE BEAM GUARDRAIL

6 - STEEL PLATE BEAM GUARDRAIL, TYPE A, 6 FOOT POSTS

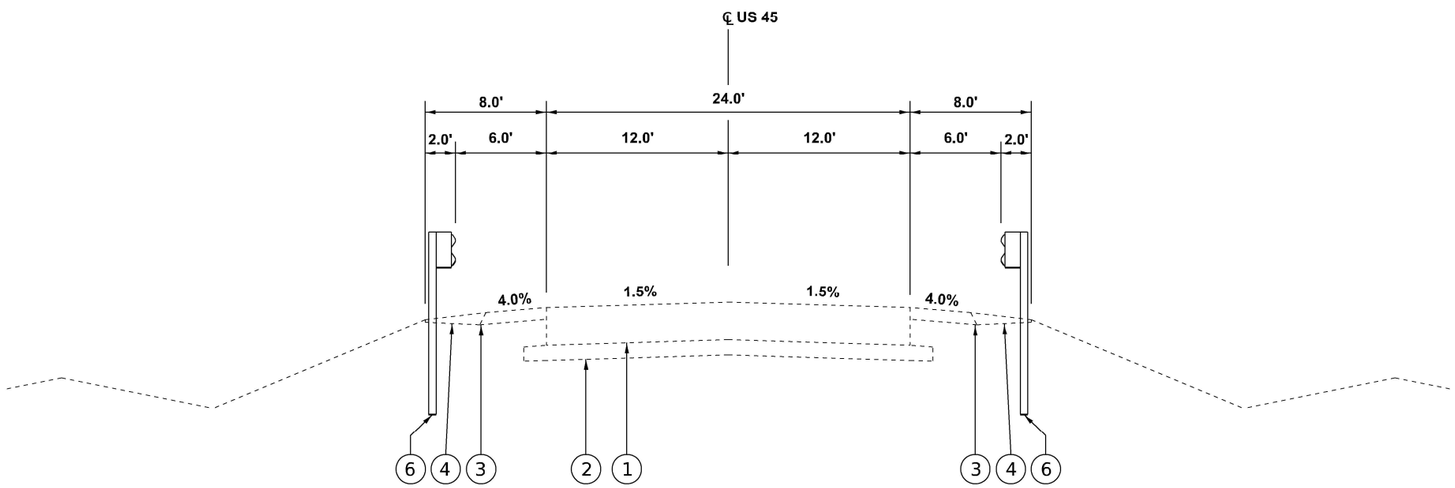

PROPOSED TYPICAL SECTION

STA. 1147+85.67 TO STA. 1152+15.12

MODEL: Typical Sections [Sheet:US 45]
FILE NAME: P:\18-1072.03-I-57 over US 45 Ph2\18-1072.03-dgn\CAD_Sheets\0570A87-sht-Typical.dgn

Kaskaskia Engineering Group, LLC
PROFESSIONAL REGISTRATIONS: Illinois Professional Design Firm 184.004753; Professional Engineering Group 20-3585006
LICENSE NO.
2001 E. Main St., Suite 300, Carbondale, Illinois 62901
618.453.5677 phone
618.453.5977 fax
www.kaskaskiaeng.com

USER NAME = jwarner	DESIGNED -	REVISED -	
	DRAWN -	REVISED -	
PLOT SCALE = 0.16666633 ' / in.	CHECKED -	REVISED -	
PLOT DATE = 3/24/2023	DATE -	REVISED -	

STATE OF ILLINOIS
DEPARTMENT OF TRANSPORTATION

FAI 57 (I–57)
TYPICAL SECTIONS – US 45

SCALE: | SHEET 2 OF 2 SHEETS | STA. | TO STA.

F.A. I. RTE.	SECTION	COUNTY	TOTAL SHEETS	SHEET NO.
57	(10-30)BR	CHAMPAIGN	107	13
		CONTRACT NO. 70A87		
		ILLINOIS	FED. AID PROJECT	

EARTHWORK SUMMARY

LOCATION	EARTHWORK			TOPSOIL		
	20200100		20400800	21101505		
	EARTHWORK EXCAVATION	EMBANKMENT	BALANCE WASTE (+) OR SHORTAGE (-)	TOPSOIL EXCAVATION & PLACEMENT	TOPSOIL EMBANKMENT	BALANCE WASTE (+) OR SHORTAGE (-) (NO SHRINKAGE)
	(CU YD)	(CU YD)	(CU YD)	(CU YD)	(CU YD)	(CU YD)
MAINLINE	274.0	10717.0	-10512.0	1467.0	1467.0	0.0
TOTAL	274.0	10717.0	-10512.0	1467.0	1467.0	0.0

EARTHWORK SCHEDULE

LOCATION	END AREAS				TOPSOIL			EARTHWORK		
	TOPSOIL STRIPPING (TSS)	TOPSOIL EMBANKMENT	EXCAVATION (CUT)	EMBANKMENT (FILL)	21101505			20200100		20400800
					TOPSOIL EXCAVATION & PLACEMENT	TOPSOIL EMBANKMENT	BALANCE WASTE (+) OR SHORTAGE (-) (NO SHRINKAGE)	EARTHWORK EXCAVATION	EMBANKMENT	BALANCE WASTE (+) OR SHORTAGE (-)
	(SQ FT)	(SQ FT)	(SQ FT)	(SQ FT)	(CU YD)	(CU YD)	(CU YD)	(CU YD)	(CU YD)	(CU YD)
MAINLINE										
110+34.4	2.8	2.8	24.0	22.8						
111+00.0	2.3	2.3	16.0	24.1	6.2	6.2	0.0	48.7	57.0	-20.5
112+00.0	7.0	7.0	7.7	32.4	17.2	17.2	0.0	43.9	104.6	-71.7
113+00.0	32.5	32.5	2.4	187.8	73.2	73.2	0.0	18.6	407.9	-394.0
114+00.0	44.2	44.2	0.9	328.9	142.0	142.0	0.0	6.1	956.8	-952.2
115+00.0	49.0	49.0	0.8	399.3	172.5	172.5	0.0	3.2	1348.4	-1346.0
116+00.0	50.6	50.6	0.9	466.3	184.4	184.4	0.0	3.1	1603.0	-1600.7
117+00.0	50.9	50.9	0.8	496.3	187.9	187.9	0.0	3.1	1782.6	-1780.3
117+86.4	48.0	48.0	0.0	744.7	158.1	158.1	0.0	1.3	1985.4	-1984.4
119+13.6	42.6	42.6	0.0	531.2						
120+00.0	42.8	42.8	12.1	201.6	136.6	136.6	0.0	19.3	1171.9	-1157.4
121+00.0	41.0	41.0	3.3	131.2	155.2	155.2	0.0	28.5	616.3	-594.9
122+00.0	38.6	38.6	2.6	80.9	147.3	147.3	0.0	11.0	392.8	-384.6
123+00.0	2.7	2.7	8.5	28.9	76.5	76.5	0.0	20.5	203.3	-187.9
124+00.0	2.4	2.4	25.8	17.0	9.5	9.5	0.0	63.5	84.9	-37.3
124+02.6	2.4	2.4	25.9	16.9	0.2	0.2	0.0	2.5	1.6	0.3
SHRINKAGE FACTOR			25%		1466.8	1466.8	0.0	273.3	10716.5	-10511.5
					1467.0	1467.0	0.0	274.0	10717.0	-10512.0

EARTHWORK GENERAL NOTES

1. ALL EARTHWORK QUANTITIES ARE CALCULATED BY THE METHOD OF AVERAGE END AREAS USING THE PLAN CROSS SECTIONS.
2. SHRINKAGE FACTOR, ASSUMED TO BE 25% FOR THIS PROJECT, IS ESTIMATED FOR THE PURPOSE OF DETERMINING A BALANCE OF EARTHWORK. THE CONTRACTOR SHALL ESTIMATE THEIR OWN SHRINKAGE FACTORS IN DETERMINING THEIR EARTHWORK. NO PAYMENT WILL BE MADE ON EARTHWORK QUANTITIES DUE TO VARIATION IN THE SHRINKAGE FACTOR SINCE EARTHWORK IS MEASURED IN ITS FINAL POSITION. NO SHRINKAGE FACTOR WAS APPLIED TO TOPSOIL.
3. FOR THE PURPOSE OF ESTIMATING TOPSOIL STRIPPING QUANTITIES, THE TOPSOIL THICKNESS WAS ESTIMATED AT FOUR (4) INCHES.
4. TESTING OF SUBGRADES AND EMBANKMENTS WILL BE REQUIRED. TESTING REQUIREMENTS WILL BE PER THE APPLICABLE SECTIONS OF THE STANDARD SPECIFICIATIONS AND THE SUBRADE STABILITY MANUAL. IF PROOF ROLLS ARE REQUIRED BY THE ENGINEER, THE COST SHALL BE CONSIDERED INCLUDED IN THE COST OF EXCAVATION.
5. EARTH EXCAVATION SHALL BE PAID FOR ONLY ONCE, REGARDLESS OF STAGING OR SEQUENCING OF CONTRACTORS OPERATIONS THAT REQUIRE STOCKPILING OF MATERIALS FOR LATER USE FOR REDISTRIBUTION AND RESPREADING IN CONSTRUCTING OF EMBANKMENTS.
6. TOPSOIL EXCAVATION AND PLACEMENT WILL INCLUDE EXCAVATION OF THE TOPSOIL MATERIAL IN ITS ORIGIANL POSITION, TEMPORARY STOCK PILING FOR LATER USE, RE-HANDLING AND SPREADING OF THE FINAL TOPSOIL COURSE FOR THE THICKNESS SPECIFIED.
7. EXISTING AGGREGATE BASE COURSE MATERIAL WILL NOT BE MEASURED SEPARTELY FOR PAYMENT BUT SHALL BE INCLUDED IN THE COST OF "EARTH EXCAVATION".

REMOVAL SCHEDULE

LOCATION			20100110 TREE REMOVAL (6 TO 15 UNITS DIAMETER) (UNIT)
I-57			
STATION		OFFSET	
117+71.6	-	95.9'RT	14
117+73.6	-	93.8'RT	14
117+79.8	-	103.0'RT	12
117+93.6	-	103.7'RT	14
117+97.4	-	109.8'LT	9
118+00.1	-	108.8'LT	7
118+02.7	-	104.2'LT	8
118+99.8	-	100.8'RT	12
119+08.0	-	110.6'RT	8
119+09.1	-	85.6'LT	14
119+20.8	-	77.2'LT	12
119+91.1	-	92.9'LT	12
TOTAL			136
ADJUSTED TOTAL			140

LOCATION			20100210 TREE REMOVAL (OVER 15 UNITS DIAMETER) (UNIT)
I-57			
STATION		OFFSET	
117+69.8	-	101.5'LT	18
117+96.6	-	85.2'LT	20
118+17.3	-	80.9'LT	16
118+96.8	-	79.8'RT	16
119+26.0	-	127.7'RT	18
119+64.6	-	126.5'RT	16
TOTAL			104
ADJUSTED TOTAL			110

LOCATION			40600982 HOT-MIX ASPHALT SURFACE REMOVAL - BUTT JOINT (SQ YD)	44000155 PAVEMENT REMOVAL 1.5" (SQ YD)	44000168 PAVEMENT REMOVAL 4.75" (SQ YD)	63200310 GUARDRAIL REMOVAL (FOOT)	Z0004552 APPROACH SLAB REMOVAL (SQ YD)	Z0004638 PAVEMENT BREAKING (SQ YD)
I-57								
STATION		STATION						
110+34	-	118+50	444.4	656.6	319.9	690.1	347.0	2880.9
118+50	-	124+03	444.4	397.2	545.2	687.5	345.3	640.2
US 45								
STATION		STATION						
1147+00	-	1153+00				689.3		
TOTAL			888.8	1053.8	865.1	2066.9	692.3	3521.1
ADJUSTED TOTAL			889	1054	866	2067	693	3522

MODEL: Removal Schedule
FILE NAME: P:\18-1072.03 I-57 over US 45 PH2\18-1072.03\dgn\CAD_Sheets\D570A87-sht-schedule.dgn

Kaskaskia Engineering Group, LLC
PROFESSIONAL ENGINEERING
Illinois Professional Design Firm 184.004773
Professional Engineering Group 28-3500586
LICENSE NO.
299 E. Main St., Suite 300
Belleville, IL 62220
618.233.5677 phone
618.233.5677 fax
www.kaskaskiaeng.com

USER NAME = jwarner	DESIGNED -	REVISED -	
	DRAWN -	REVISED -	
PLOT SCALE = 0.16666633 ' / in.	CHECKED -	REVISED -	
PLOT DATE = 3/24/2023	DATE -	REVISED -	

STATE OF ILLINOIS
DEPARTMENT OF TRANSPORTATION

FAI 57 (I–57)
SCHEDULE OF QUANTITIES

SCALE: | SHEET 2 OF 4 SHEETS | STA. | TO STA.

F.A.I. RTE.	SECTION	COUNTY	TOTAL SHEETS	SHEET NO.
57	(10-30)BR	CHAMPAIGN	107	15
		CONTRACT NO. 70A87		
		ILLINOIS	FED. AID PROJECT	

ROADWAY IMPROVEMENTS SCHEDULE

LOCATION	20600110 GRANULAR EMBANKMENT, SPECIAL (TON)	40600372 LONGITUDINAL JOINT SEALANT, HALF-WIDTH (FOOT)	40603090 HOT-MIX ASPHALT BINDER COURSE, IL-19.0, N90 (TON)	40603219 POLYMERIZED HOT-MIX ASPHALT BINDER COURSE, 9.5FG, N90 (TON)	40604114 POLYMERIZED HOT-MIX ASPHALT SURFACE COURSE, IL-9.5FG, MIX "D", N90 (TON)	42000080 PAVEMENT CONNECTOR (PCC) FOR BRIDGE APPROACH SLAB (SQ YD)	48101200 AGGREGATE SHOULDERS, TYPE B, 6" (TON)	48203100 HOT-MIX ASPHALT SHOULDERS (TON)	63000001 STEEL PLATE BEAM GUARDRAIL, TYPE A, 6 FT POSTS (FOOT)	63100085 TRAFFIC BARRIER TERMINAL, TYPE 6 (EACH)	63100167 TRAFFIC BARRIER TERMINAL, TYPE 1 (SPECIAL) TANGENT (EACH)	64200116 SHOULDER RUMBLE STRIPS, 16 INCH (FOOT)	66201120 CONCRETE SHOULDER CURB (FOOT)	78008330 POLYUREA PAVEMENT MARKING TYPE II - LINE 6" (FOOT)	78200005 GUARDRAIL REFLECTORS, TYPE A (EACH)	X6311217 TRAFFIC BARRIER TERMINAL, TYPE 6B (SPECIAL) (EACH)	Z0004638 PAVEMENT BREAKING (SQ YD)
I-57 STATION STATION																	
110+34 - 118+50	1322.4	2833.5	1529.3	529.3	317.4	146.3	435.5	2331.7	669.1	2	2	2831.1	0.0	3680.6	12		2880.9
118+50 - 124+03	210.5	1781.5	797.7	332.9	199.5	146.3	277.1	961	535	2	2	1779.2	65.9	2488.6	12		640.2
US 45 STATION STATION																	
1147+00 - 1153+00									601.8		4					8	
TOTAL	1532.9	4615	2327.0	862.2	516.9	292.6	712.6	3292.7	1805.9	4.0	8.0	4610.3	65.9	6169.2	24.0	8.0	3521.1
ADJUSTED TOTAL	1533	4616	2328	863	517	293	713	3293	1806	4	8	4611	66	6170	24	8	3522

DRAINAGE SCHEDULE

LOCATION	54213447 END SECTIONS 12" (EACH)	54213459 END SECTIONS 24" (EACH)	54213471 END SECTIONS 36" (EACH)	54248510 CONCRETE COLLAR (CU YD)	542A0241 PIPE CULVERTS, CLASS A, TYPE 1, 36" (FOOT)	542D0229 PIPE CULVERTS, CLASS D, TYPE 1, 24" (FOOT)	60100060 CONCRETE HEADWALLS FOR PIPE DRAINS (EACH)	60100945 PIPE DRAINS 12" (FOOT)	61000050 CONCRETE THRUST BLOCKS (EACH)	61000225 TYPE F INLET BOX, STANDARD 610001 (EACH)	61000335 TYPE G INLET BOX, STANDARD 610001 (EACH)	Z0018400 DRAIANGE STRUCTURES TO BE ADJUSTED (EACH)
I-57 STATION STATION												
110+34 - 118+50	0	1	2	1.83	6.1	12.3	7	0	0	0	0	0
118+50 - 124+03	4	0	0	0	0	0	2	174.1	4	2	2	1
TOTAL	4	1	2	1.83	6.1	12.3	9	174.1	4	2	2	1
ADJUSTED TOTAL	4	1	2	2	7	13	9	175	4	2	2	1

MAINTENANCE OF TRAFFIC SCHEDULE

LOCATION	70106700 TEMPORARY RUMBLE STRIPS (EACH)	70107006 PAVEMENT MARKING BLACKOUT TAPE, 6" (FOOT)	70300241 TEMPORARY PAVEMENT MARKING - LINE 6" - PAINT (FOOT)	70400100 TEMPORARY CONCRETE BARRIER (FOOT)	70400200 RELOCATE TEMPORARY CONCRETE BARRIER (FOOT)	70600250 IMPACT ATTENUATORS, TEMP (NON-REDIRECTIVE), TEST LEVEL 3 (EACH)	70600350 IMPACT ATTENUATORS, RELOCATE (NON-REDIRECTIVE) TEST LEVEL 3 (EACH)	78200011 BARRIER WALL REFLECTORS, TYPE C (EACH)
I-57								
STAGE 1	8.0	3680.6	10333	3165	0	2	0	250
STAGE 2	8.0	2488.6	11734	126	3165	0	2	8
US 45								
TOTAL	16.0	6169.2	22067.0	3291.0	3165.0	2.0	2.0	258.0
ADJUSTED TOTAL	16	6170	22067	3291	3165	2	2	258

MODEL: Roadway Improvements Schedule
FILE NAME: P:\18-1072\03-I-57 over US 45 Ph2\18-1072.03-sgn\CAD_Sheets\D570A87-dtlsheet-schedule.dgn

Kaskaskia Engineering Group, LLC
PROFESSIONAL REGISTRATIONS LICENSE NO.
Illinois Professional Design Firm 184-004753
Professional Engineering Group 20-5500586

USER NAME = jwarner | DESIGNED - | REVISED -
DRAWN - | REVISED -
PLOT SCALE = 0.16666633 ' / in. | CHECKED - | REVISED -
PLOT DATE = 3/31/2023 | DATE - | REVISED -

STATE OF ILLINOIS
DEPARTMENT OF TRANSPORTATION

FAI 57 (I–57)
SCHEDULE OF QUANTITIES

SCALE: | SHEET 3 OF 4 SHEETS | STA. TO STA.

F.A.I. RTE.	SECTION	COUNTY	TOTAL SHEETS	SHEET NO.
57	(10-30)BR	CHAMPAIGN	107	16
		CONTRACT NO. 70A87		
		ILLINOIS	FED. AID PROJECT	

EROSION CONTROL SCHEDULE

LOCATION	25000210 SEEDING, CLASS 2A (ACRE)	25000350 SEEDING, CLASS 7 (ACRE)	25000400 NITROGEN FERTILIZER NUTRIENT (POUND)	25000500 PHOSPHORUS FERTILIZER NUTRIENT (POUND)	25000600 POTASSIUM FERTILIZER NUTRIENT (POUND)	25100125 MULCH, METHOD 3 (ACRE)	25100630 EROSION CONTROL BLANKET (SQ YD)	28000250 TEMPORARY EROSION CONTROL SEEDING (POUND)	28000305 TEMPORARY DITCH CHECKS (FOOT)	28000400 PERIMETER EROSION BARRIER (FOOT)	28000500 INLET AND PIPE PROTECTION (EACH)	28100107 STONE RIPRAP, CLASS A4 (SQ YD)	28200200 FILTER FABRIC (SQ YD)
I-57 STATION STATION													
110+34 - 118+50	2.42	2.42	218.0	218.0	218.0	2.42	873.2	242.2	332	1135	2	111.4	111.4
118+50 - 124+03	1.45	1.45	130.8	130.8	130.8	1.45	726.6	145.3	220	660.0	1	74.2	74.2
TOTAL	3.87	3.87	348.8	348.8	348.8	3.87	1599.8	387.5	552	1795.0	3	185.6	185.6
ADJUSTED TOTAL	4.00	4.00	349	349	349	4.00	1600	388	552	1795	3	186	186

UNDERDRAIN SCHEDULE

LOCATION	60100060 CONCRETE HEADWALLS FOR PIPE DRAINS (EACH)	60108100 PIPE UNDERDRAINS 4" (SPECIAL) (FOOT)	X6015000 REMOVE CONCRETE HEADWALLS FOR PIPE DRAINS (EACH)	Z0040530 PIPE UNDERDRAIN REMOVAL (FOOT)
I-57 STATION				
113+13.91	1	23.3	1	15.8
113+19.23	1	22.5	1	13.4
113+30.94	1	26.1	1	15.6
117+04.05	1	25.0	1	16.1
117+07.08	1	25.0	1	14.9
117+49.07	1	21.5	1	17.5
117+73.78	1	23.7	1	18.3
123+94.33	1	16.1	1	13.4
124+01.70	1	21.5	1	16.2
TOTAL	9	205	9	141
ADJUSTED TOTAL	9	205	9	142

MODEL: Erosion Control Schedule
FILE NAME: P:\18-1072.03-I-57 over US 45 Ph2\18-1072.03\dgn\CAD_Sheets\D570A87-ehl-schedule.dgn

Kaskaskia Engineering Group, LLC
299 E. Main St., Suite 300
Belleville, IL 62220
618.233.5672 phone
618.233.5677 fax
www.kaskaskiaeng.com
PROFESSIONAL REGISTRATIONS
Illinois Professional Design Firm 184-004793
Professional Engineering Group 28-5040006
LICENSE NO.

USER NAME = jwarner	DESIGNED -	REVISED -	
	DRAWN -	REVISED -	
PLOT SCALE = 0.16666633 ' / in.	CHECKED -	REVISED -	
PLOT DATE = 3/24/2023	DATE -	REVISED -	

STATE OF ILLINOIS
DEPARTMENT OF TRANSPORTATION

FAI 57 (I–57)
SCHEDULE OF QUANTITIES

SCALE: | SHEET 4 OF 4 SHEETS | STA. TO STA.

F.A. I. RTE.	SECTION	COUNTY	TOTAL SHEETS	SHEET NO.
57	(10-30)BR	CHAMPAIGN	107	17

CONTRACT NO. 70A87

ILLINOIS | FED. AID PROJECT

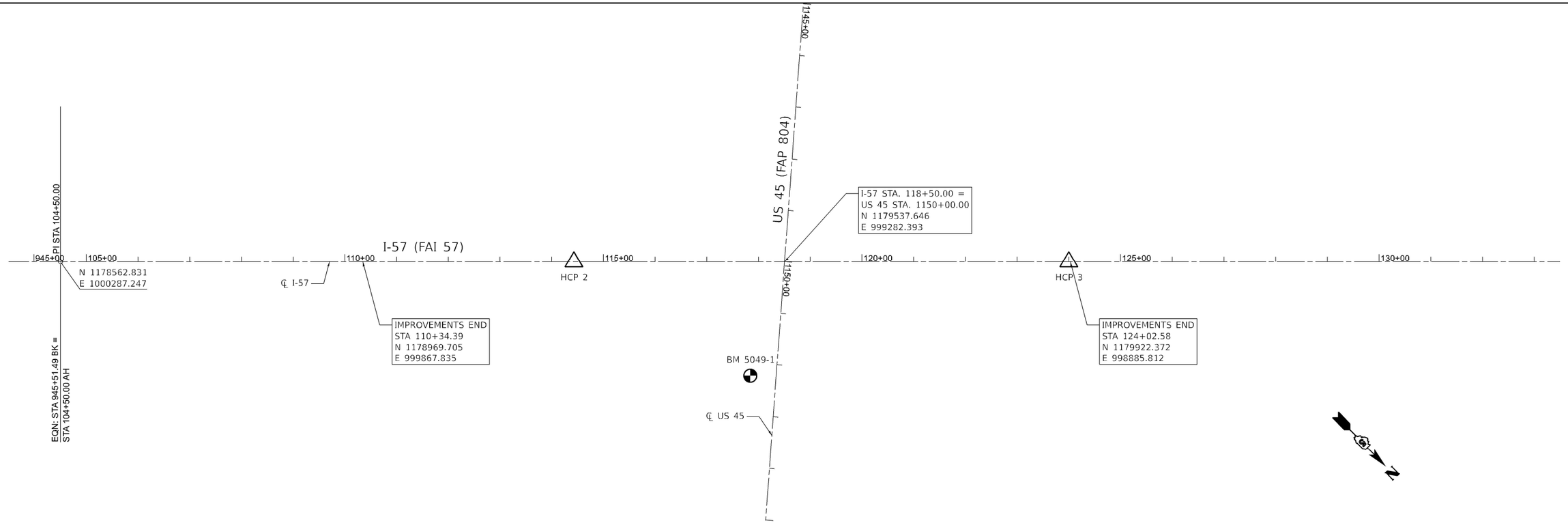

NOTES

THE CONTRACTOR SHALL BE RESPONSIBLE FOR SETTING ADDITIONAL CONTROL POINTS AND BENCHMARKS SHOULD THE ONES PROVIDED BE LOST OR DESTORYED DURING CONSTRUCTION ACTIVITIES.

LEGEND

= BENCH MARK (BM) LOCATION

= HORIZONTAL CONTROL POINT (HCP) LOCATION

HORIZONTAL CONTROL POINTS (NAD 83)

POINT	NORTH	EAST	ELEVATION	CHAIN	STATION	OFFSET	DESCRIPTION
2	1179254.101	999574.804		I-57	114+42.69	0.00' RT/LT	PSM
3	1179920.396	998887.819		I-57	123+99.71	0.00' RT/LT	PSM

BENCH MARKS (NAVD 88)

POINT	NORTH	EAST	ELEVATION	CHAIN	STATION	OFFSET	DESCRIPTION
5049-1	1179649.864	999483.419	705.989	US 45	1152+23.98	50.29' RT	CHISELED SQUARE IN CONTROLLER BOX FOUNDATION

MODEL: Horizontal and Vertical Control
FILE NAME: P:\18-1072.03-I-57 over US 45 Ph2\18-1072.03.dgn\CAD_Sheets\D570A87-sht-alignment.dgn

Kaskaskia Engineering Group, LLC
PROFESSIONAL REGISTRATIONS
Illinois Professional Design Firm 184-0473
Professional Engineering Group 28-5000006

USER NAME = jwarner	DESIGNED -	REVISED -	
	DRAWN -	REVISED -	
PLOT SCALE = 0.16666633 ' / in.	CHECKED -	REVISED -	
PLOT DATE = 3/24/2023	DATE -	REVISED -	

STATE OF ILLINOIS
DEPARTMENT OF TRANSPORTATION

FAI 57 (I–57)
HORIZONTAL & VERTICAL CONTROL PLAN

SCALE: | SHEET 1 OF 1 SHEETS | STA. TO STA.

F.A. I. RTE.	SECTION	COUNTY	TOTAL SHEETS	SHEET NO.
57	(10-30)BR	CHAMPAIGN	107	18

CONTRACT NO. 70A87

ILLINOIS | FED. AID PROJECT

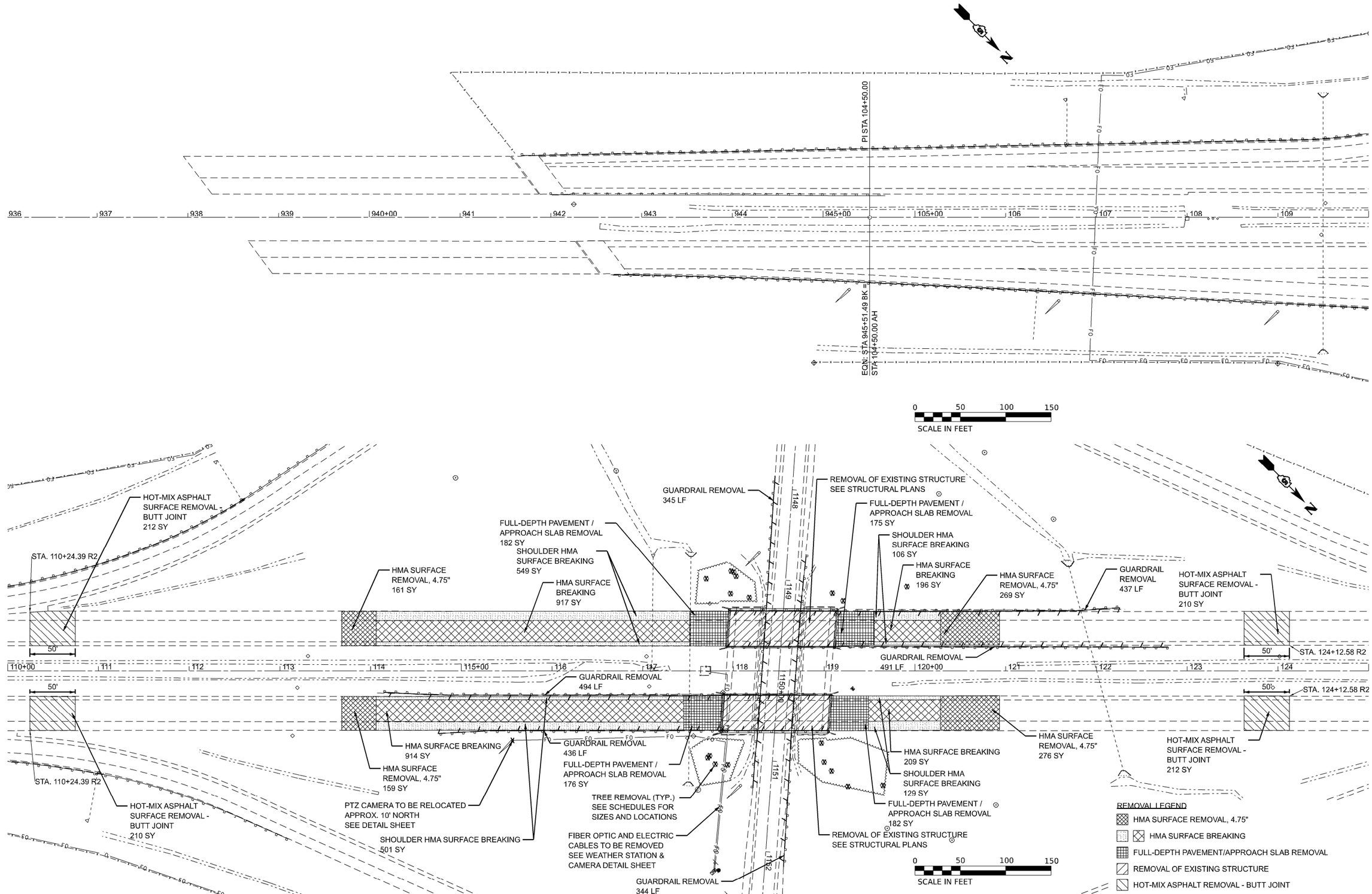

MODEL: ExCL_NB - Removal Plans [Sheet]
FILE NAME: P:\18-1072.03 k-57 over US 45 PH2\18-1072.03\dgn\CAD_Sheets\D570A87-alt-removal.dgn

Kaskaskia Engineering Group, LLC
PROFESSIONAL REGISTRATIONS
Illinois Professional Design Firm 184.004773
Professional Engineering Group 20-5080086
LICENSE NO.
249 E. Main St., Suite 300
Belleville, Illinois 62220
618.233.5672 phone
618.233.8675 fax
www.kaskaskiaeng.com

USER NAME = jwarner	DESIGNED -	REVISED -	STATE OF ILLINOIS DEPARTMENT OF TRANSPORTATION	FAI 57 (I–57) REMOVAL PLAN	
	DRAWN -	REVISED -			
PLOT SCALE = 0.16666633 ' / in.	CHECKED -	REVISED -			
PLOT DATE = 3/24/2023	DATE -	REVISED -		SCALE: 1"=50' SHEET 1 OF 2 SHEETS STA. 936+01.49 TO STA. 125+00.00	

F.A. I. RTE.	SECTION	COUNTY	TOTAL SHEETS	SHEET NO.
57	(10-30)BR	CHAMPAIGN	107	19
		CONTRACT NO. 70A87		
		ILLINOIS	FED. AID PROJECT	

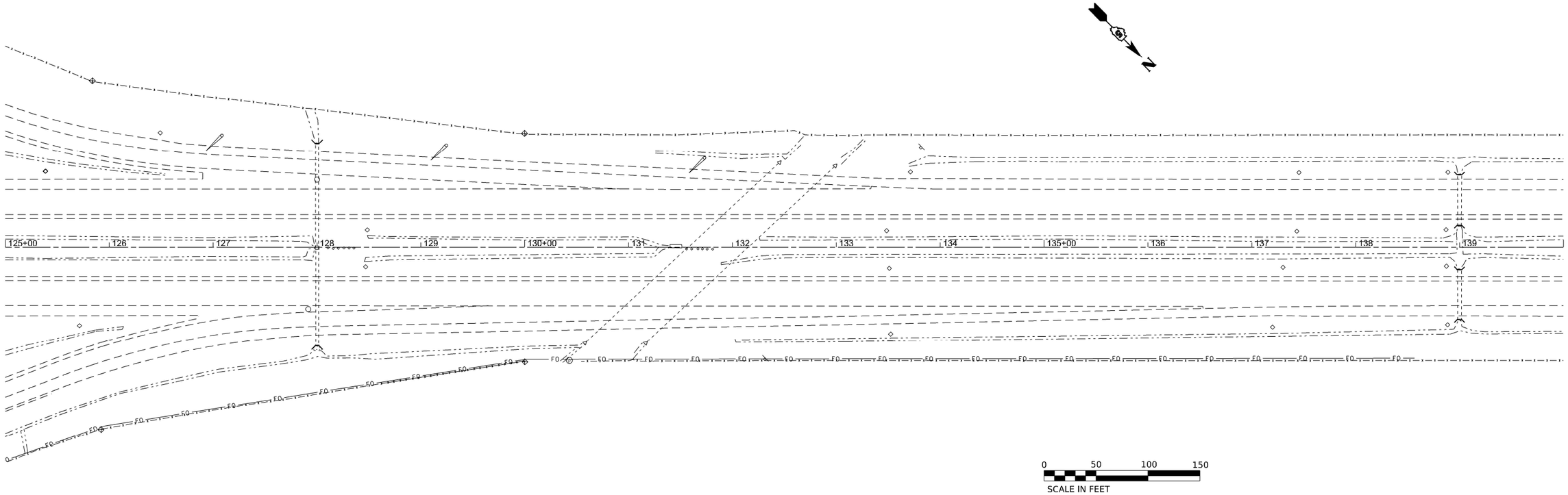

MODE: ExCL_NB - Removal Plans-2 [Sheet]
FILE NAME: P:\18-1072.03-I-57 over US 45 Ph2\18-1072.03\dgn\CAD_Sheets\D570A87-sht-removal.dgn

Kaskaskia Engineering Group, LLC
PROFESSIONAL REGISTRATIONS
Illinois Professional Design Firm 184-004793
Professional Engineering Group 28-5040006
LICENSE NO.
299 E. Main St., Suite 300
Belleville, IL 62220
618.233.5672 phone
618.233.5677 fax
www.kaskaskiieng.com

USER NAME = jwarner	DESIGNED -	REVISED -	
	DRAWN -	REVISED -	
PLOT SCALE = 0.16666633 ' / in.	CHECKED -	REVISED -	
PLOT DATE = 3/24/2023	DATE -	REVISED -	

STATE OF ILLINOIS
DEPARTMENT OF TRANSPORTATION

FAI 57 (I–57)
REMOVAL PLAN

SCALE: 1"=50' | SHEET 2 OF 2 SHEETS | STA. 125+00.00 TO STA. 140+00.00

F.A.I. RTE.	SECTION	COUNTY	TOTAL SHEETS	SHEET NO.
57	(10-30)BR	CHAMPAIGN	107	20
		CONTRACT NO. 70A87		
		ILLINOIS	FED. AID PROJECT	

SECTION 27, T17N, R8E, 3RD PM

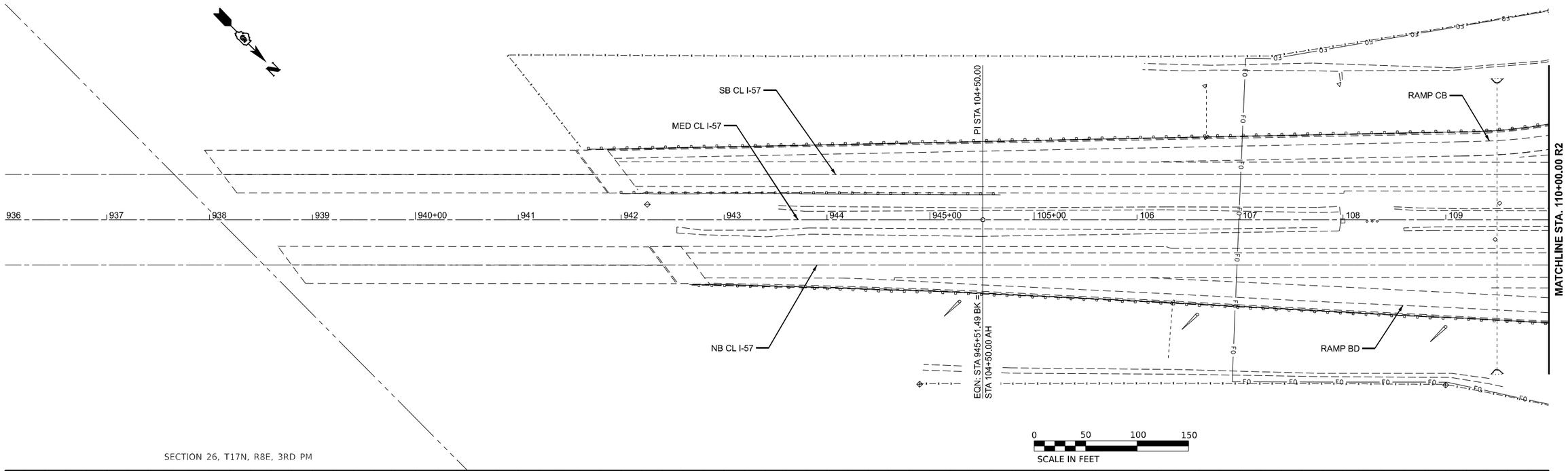

SECTION 26, T17N, R8E, 3RD PM

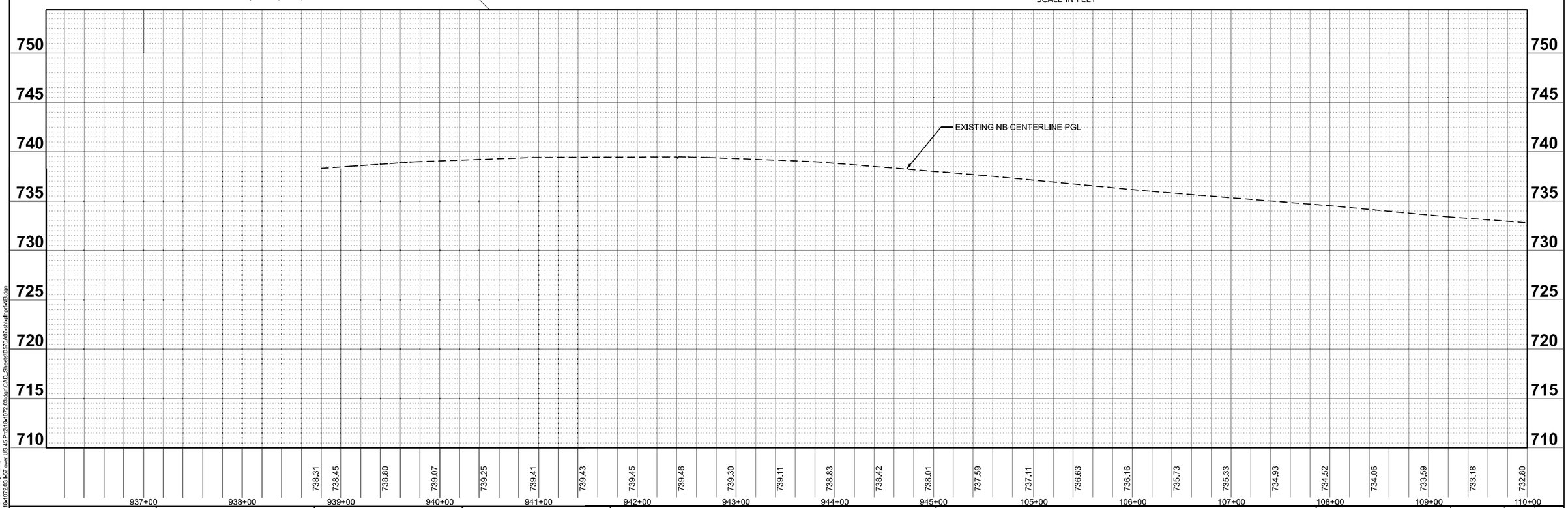

MODEL: ExCL_NB - Plan 1 [Sheet]
FILE NAME: P:\18-1072.03 I-57 over US 45 Ph2\18-1072.03.dgn\CAD_Sheets\D570A87-sht-plan-NB.dgn

Kaskaskia Engineering Group, LLC
PROFESSIONAL REGISTRATIONS: Illinois Professional Design Firm; Professional Engineering Group
LICENSE NO.: 184-000792; 28-3/68586
209 E. Main St., Suite 300, Belleville, Illinois 62220; 618.233.5677 phone; 618.233.5677 fax; www.kaskaskiaeng.com

USER NAME = jwarner	DESIGNED -	REVISED -	
	DRAWN -	REVISED -	
PLOT SCALE = 0.16666633 ' / in.	CHECKED -	REVISED -	
PLOT DATE = 3/24/2023	DATE -	REVISED -	

STATE OF ILLINOIS
DEPARTMENT OF TRANSPORTATION

FAI 57 (I–57)
NB PLAN AND PROFILE

SCALE: 1"=50' | SHEET 1 OF 7 SHEETS | STA. 936+01.49 TO STA. 110+00.00

F.A.I. RTE.	SECTION	COUNTY	TOTAL SHEETS	SHEET NO.
57	(10-30)BR	CHAMPAIGN	107	21
		CONTRACT NO. 70A87		
		ILLINOIS	FED. AID PROJECT	

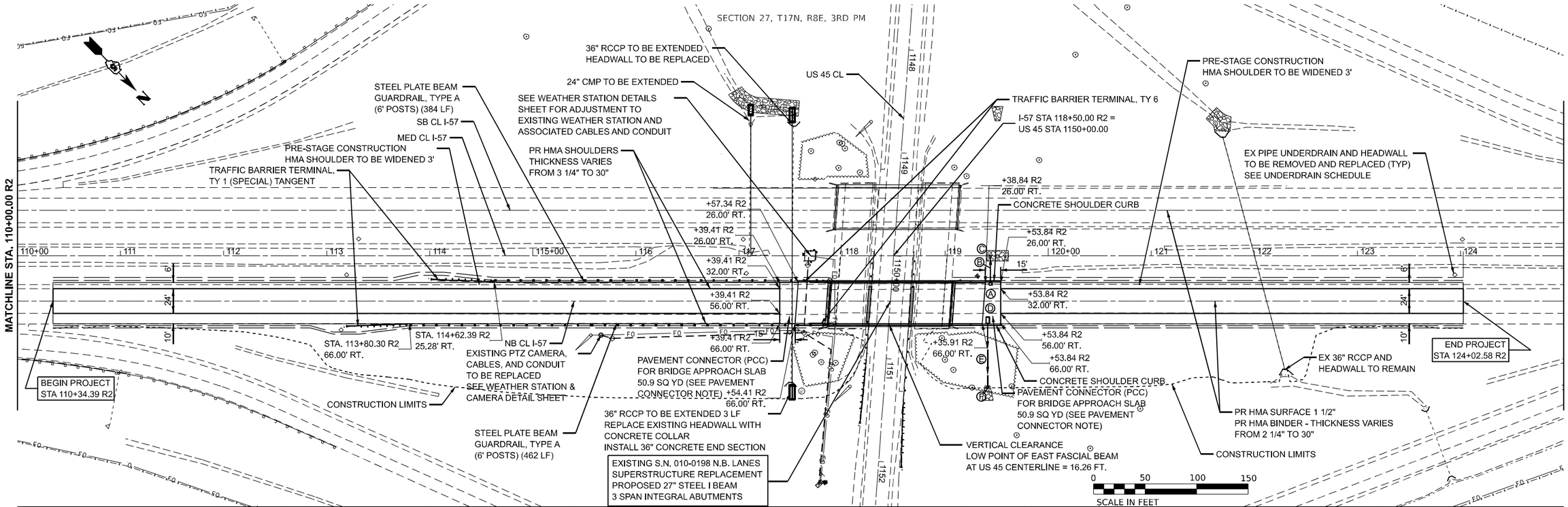

DRAINAGE LAYOUT SCHEDULE

A TYPE G INLET BOX, STANDARD 610001
STA 119+43.8
RIM 726.48 (AT SHLDR EDGE)
INV 723.81

B PIPE DRAINS 12"
24 LF

C METAL FLARED END SECTIONS, 12"
STA 119+43.8, 0.0' RT (AT END)
INV 722.42

D TYPE F INLET BOX, STANDARD 610001
STA 119+41.1
RIM 726.36 (AT SHLDR EDGE)
INV 723.69

E PIPE DRAINS 12"
60 LF

F METAL FLARED END SECTIONS, 12"
STA 119+41.1, 128.2' RT (AT END)
INV 706.18

MODEL: Ex:CL_NB - Plan 2 [Sheet]
FILE NAME: P:\15-1072.03-57 over US 45 Ph2\15-1072.03\dgn\CAD_Sheets\D570A87-sht-hdpr-NB.dgn

Kaskaskia Engineering Group, LLC
PROFESSIONAL REGISTRATIONS: Illinois Professional Design Firm, Professional Engineering Group
299 E. Main St., Suite 100, Belleville, Illinois 62220, 618.233.5677 phone, 618.233.5677 fax, www.kaskaskiaeng.com
LICENSE NO. 184.004773, 20-3686586

USER NAME = jwarner	DESIGNED -	REVISED -	
	DRAWN -	REVISED -	
PLOT SCALE = 0.16666633 ' / in.	CHECKED -	REVISED -	
PLOT DATE = 3/31/2023	DATE -	REVISED -	

STATE OF ILLINOIS
DEPARTMENT OF TRANSPORTATION

FAI 57 (I–57)
NB PLAN AND PROFILE

SCALE: 1"=50' | SHEET 2 OF 7 SHEETS | STA. 110+00.00 TO STA. 125+00.00

F.A.I. RTE.	SECTION	COUNTY	TOTAL SHEETS	SHEET NO.
57	(10-30)BR	CHAMPAIGN	107	22

CONTRACT NO. 70A87

ILLINOIS | FED. AID PROJECT

SECTION 27, T17N, R8E, 3RD PM

SECTION 22, T17N, R8E, 3RD PM

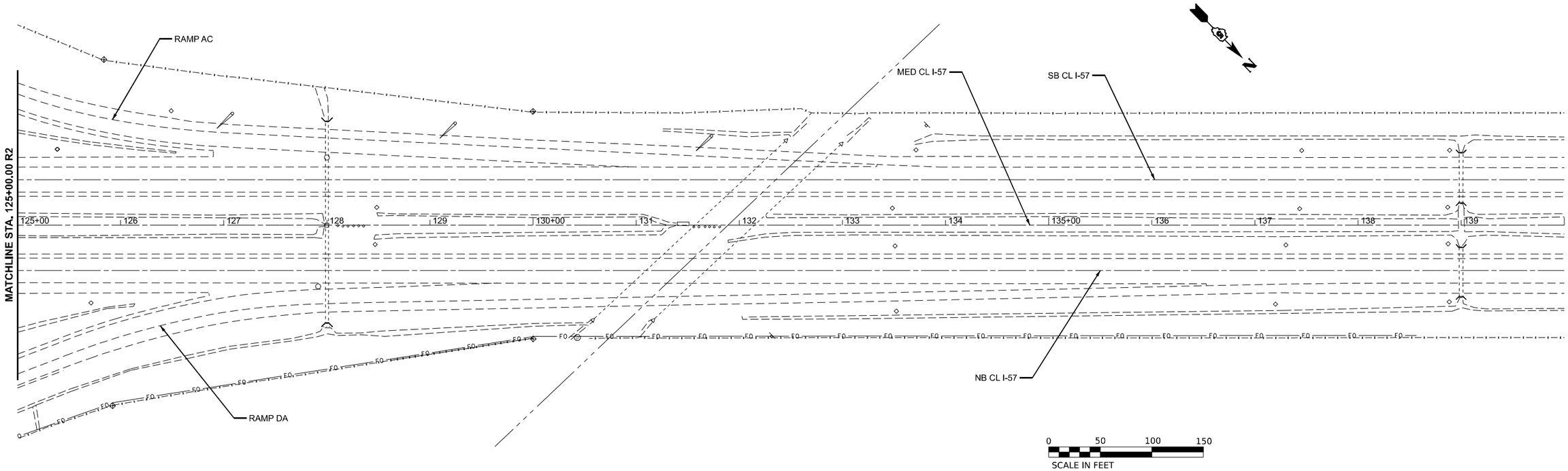

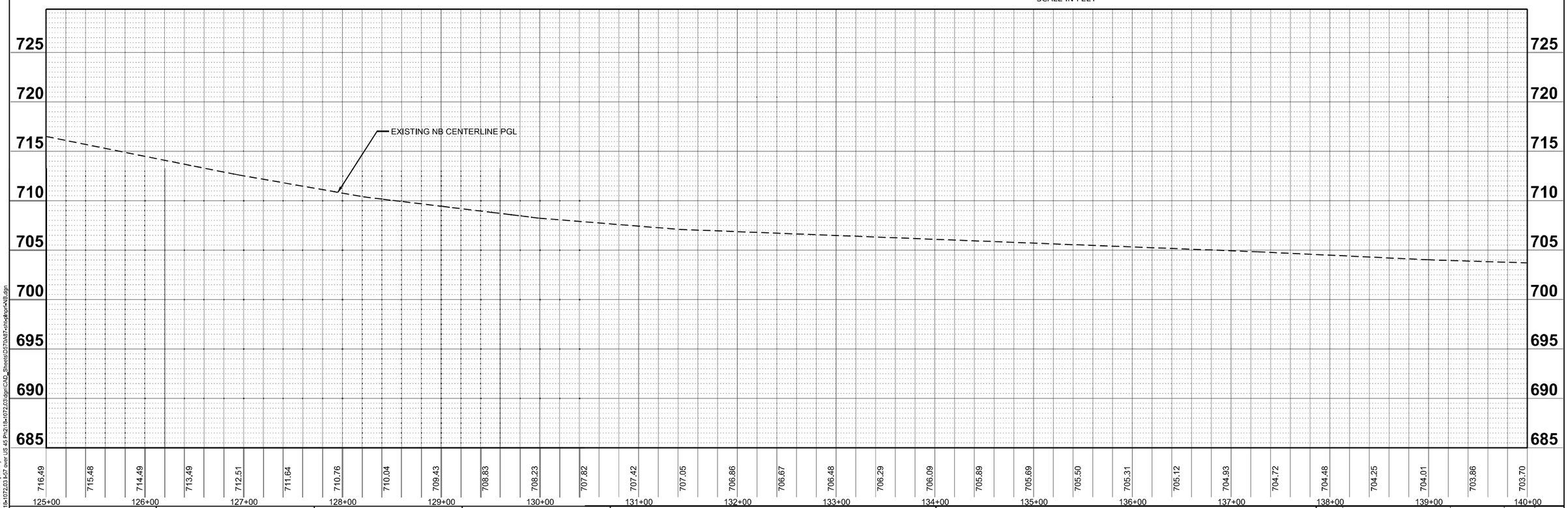

MODEL: ExCL_NB - Plan 3 [Sheet]
FILE NAME: P:\18-1072.03 I-57 over US 45 Ph2\18-1072.03.dgn\CAD_Sheets\D570A87-sht-plan-NB.dgn

Kaskaskia Engineering Group, LLC
PROFESSIONAL REGISTRATIONS
Illinois Professional Design Firm
Professional Engineering Group
LICENSE NO.
184-000792
28-0308586
209 E. Main St., Suite 300
Belleville, Illinois 62220
618.233.5677 phone
618.233.5677 fax
www.kaskaskiaeng.com

USER NAME = jwarner	DESIGNED -	REVISED -	
	DRAWN -	REVISED -	
PLOT SCALE = 0.16666633 ' / in.	CHECKED -	REVISED -	
PLOT DATE = 3/24/2023	DATE -	REVISED -	

STATE OF ILLINOIS
DEPARTMENT OF TRANSPORTATION

FAI 57 (I–57)
NB PLAN AND PROFILE

SCALE: 1"=50' | SHEET 3 OF 7 SHEETS | STA. 125+00.00 TO STA. 140+00.00

F.A.I. RTE.	SECTION	COUNTY	TOTAL SHEETS	SHEET NO.
57	(10-30)BR	CHAMPAIGN	107	23
		CONTRACT NO. 70A87		
		ILLINOIS	FED. AID PROJECT	

SECTION 27, T17N, R8E, 3RD PM

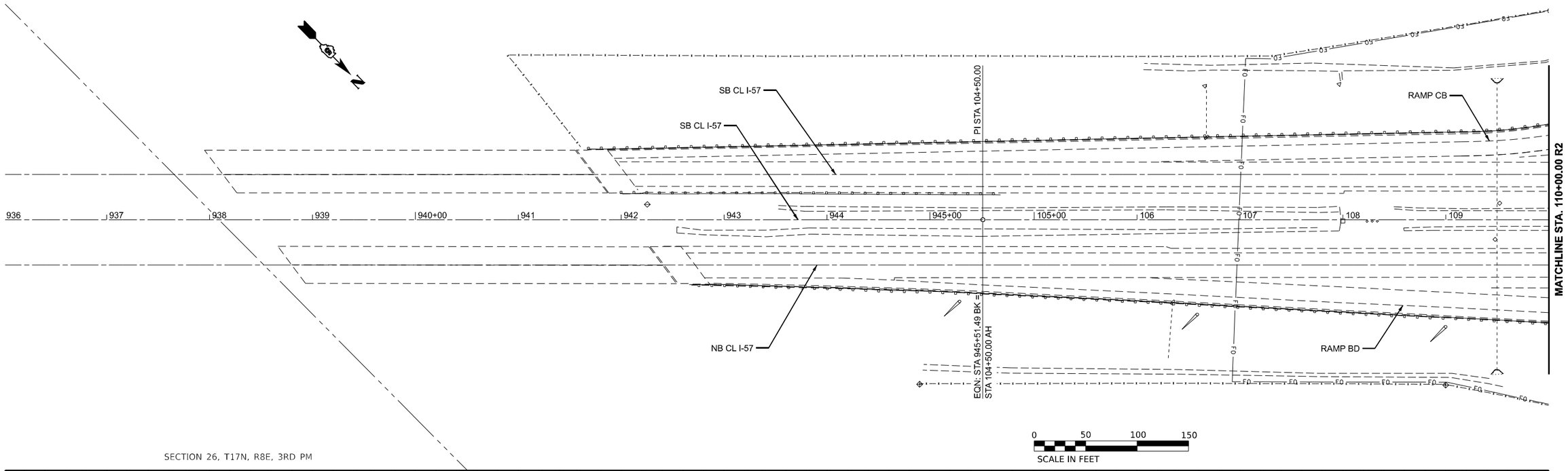

SECTION 26, T17N, R8E, 3RD PM

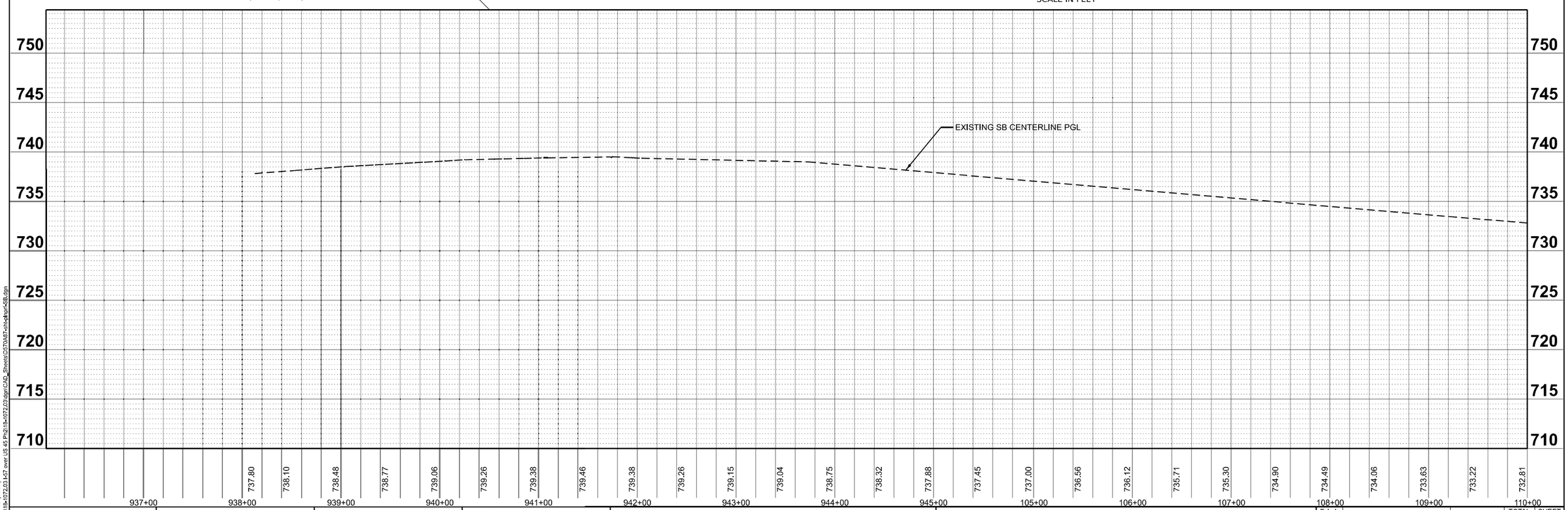

MODEL: ExGL - SB [Sheet]
FILE NAME: P:\18-1072.03\I-57 over US 45 Ph2\18-1072.03\dgn\CAD_Sheets\D570A87-dh-dhprl-SB.dgn

Kaskaskia Engineering Group, LLC
PROFESSIONAL REGISTRATIONS: Illinois Professional Design Firm; Professional Engineering Group
LICENSE NO.: 184-000792; 20-3-0-0586

USER NAME = jwarner	DESIGNED -	REVISED -	
	DRAWN -	REVISED -	
PLOT SCALE = 0.16666633 ' / in.	CHECKED -	REVISED -	
PLOT DATE = 3/24/2023	DATE -	REVISED -	

STATE OF ILLINOIS
DEPARTMENT OF TRANSPORTATION

FAI 57 (I–57)
SB PLAN AND PROFILE

SCALE: 1"=50' | SHEET 4 OF 7 SHEETS | STA. 936+51.49 TO STA. 110+00.00

F.A.I. RTE.	SECTION	COUNTY	TOTAL SHEETS	SHEET NO.
57	(10-30)BR	CHAMPAIGN	107	24
		CONTRACT NO. 70A87		
		ILLINOIS	FED. AID PROJECT	

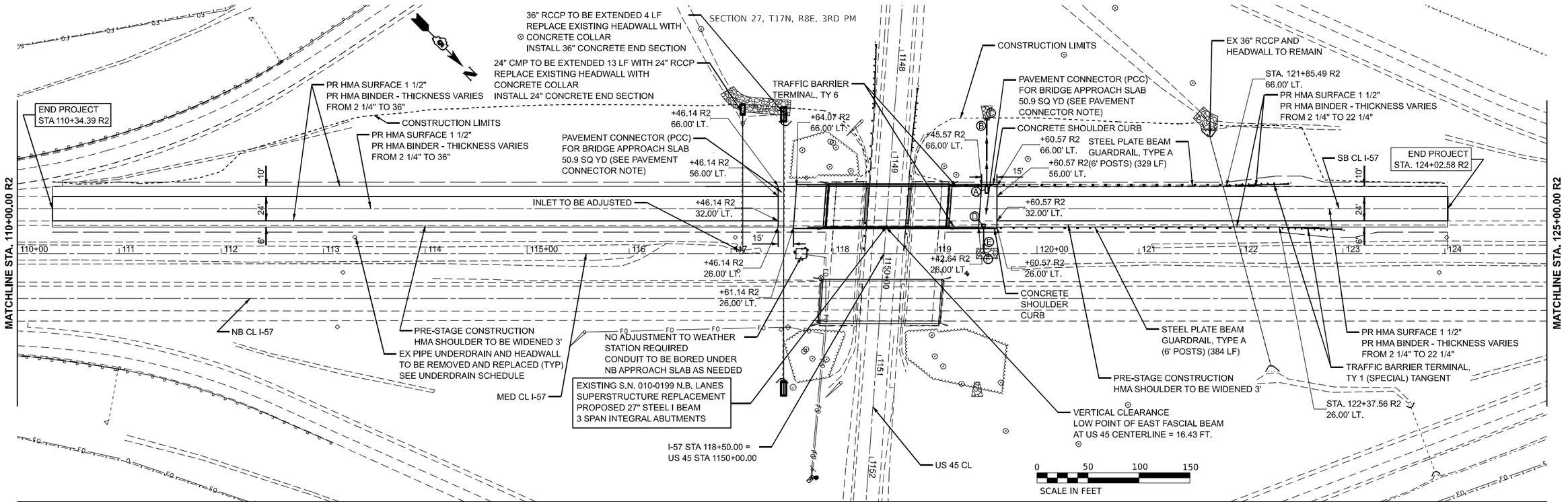

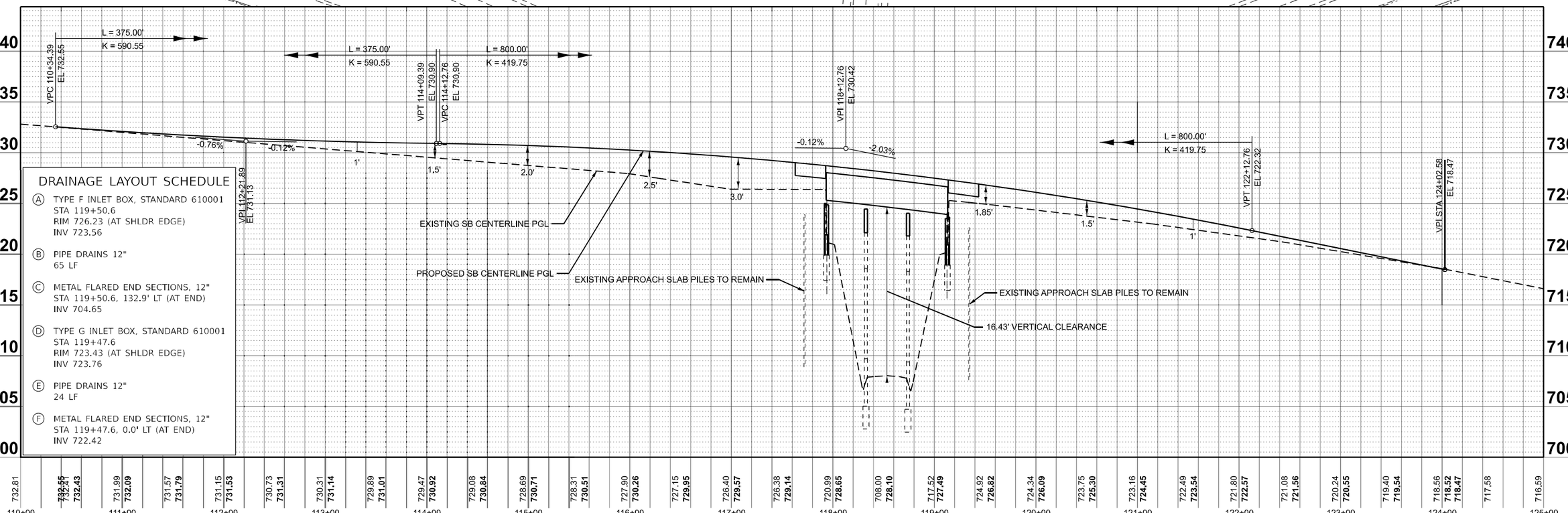

DRAINAGE LAYOUT SCHEDULE

(A) TYPE F INLET BOX, STANDARD 610001
STA 119+50.6
RIM 726.23 (AT SHLDR EDGE)
INV 723.56

(B) PIPE DRAINS 12"
65 LF

(C) METAL FLARED END SECTIONS, 12"
STA 119+50.6, 132.9' LT (AT END)
INV 704.65

(D) TYPE G INLET BOX, STANDARD 610001
STA 119+47.6
RIM 723.43 (AT SHLDR EDGE)
INV 723.76

(E) PIPE DRAINS 12"
24 LF

(F) METAL FLARED END SECTIONS, 12"
STA 119+47.6, 0.0' LT (AT END)
INV 722.42

MODEL: ExCL - SB-1 [Sheet]
FILE NAME: P:\15-1072.03-57 over US 45 Ph2\15-1072.03\dgn\CAD_Sheets\D270A87-sht-hdpr-sb.dgn

Kaskaskia Engineering Group, LLC
PROFESSIONAL REGISTRATIONS
Illinois Professional Design Firm
Professional Engineering Group
299 E. Main St., Suite 100
Belleville, Illinois 62220
618.233.5677 phone
618.233.5677 fax
www.kaskaskiaeng.com
LICENSE NO.
184.004773
20-3385586

USER NAME = jwarner	DESIGNED -	REVISED -	
	DRAWN -	REVISED -	
PLOT SCALE = 0.16666633 ' / in.	CHECKED -	REVISED -	
PLOT DATE = 3/31/2023	DATE -	REVISED -	

STATE OF ILLINOIS
DEPARTMENT OF TRANSPORTATION

FAI 57 (I–57)
SB PLAN AND PROFILE

SCALE: 1"=50' | SHEET 5 OF 7 SHEETS | STA. 110+00.00 TO STA. 125+00.00

F.A.I. RTE.	SECTION	COUNTY	TOTAL SHEETS	SHEET NO.
57	(10-30)BR	CHAMPAIGN	107	25

CONTRACT NO. 70A87

ILLINOIS | FED. AID PROJECT

SECTION 27, T17N, R8E, 3RD PM

SECTION 22, T17N, R8E, 3RD PM

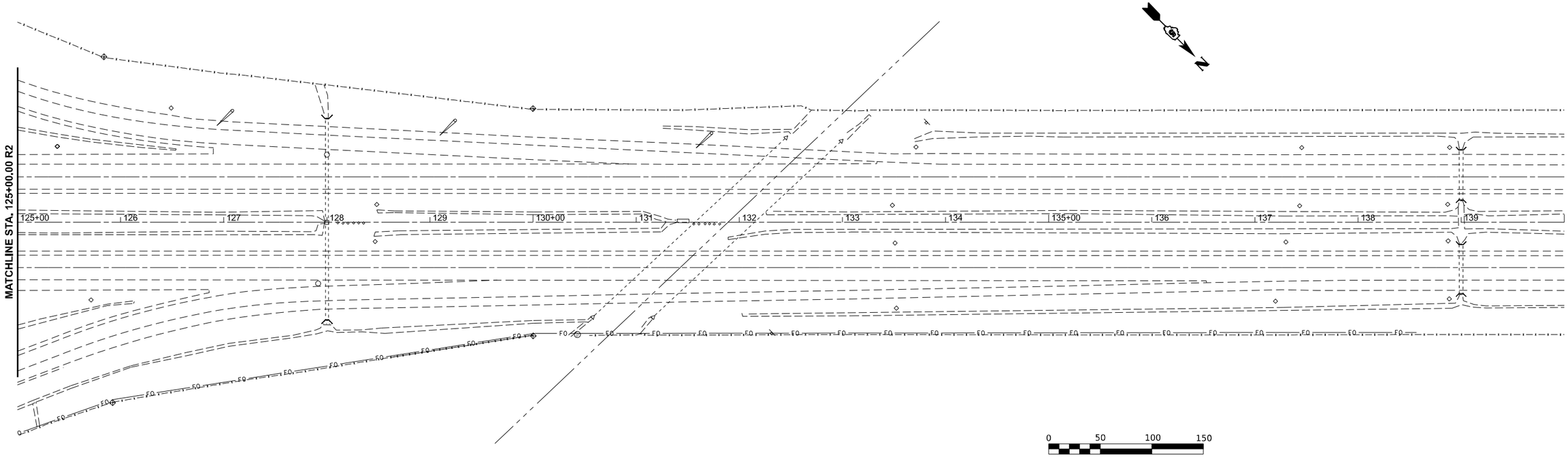

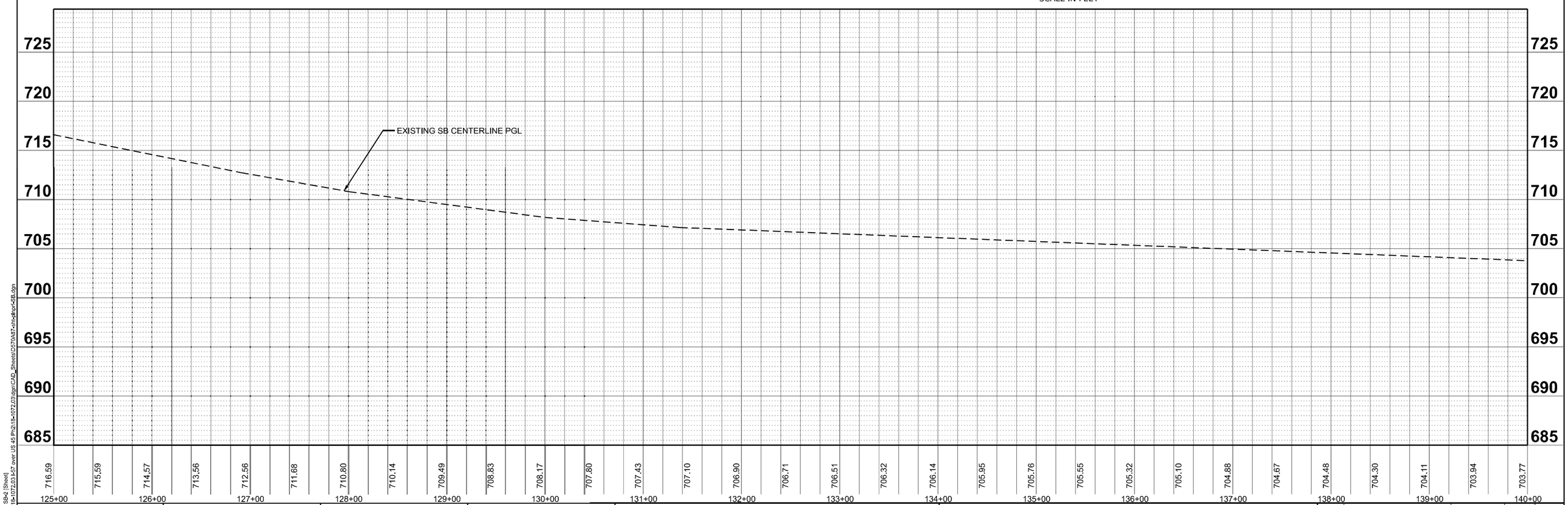

MODEL: ExGL - SB-2 [Sheet]
FILE NAME: P:\18-1072.03 I-57 over US 45 Ph2\18-1072.03.dgn\CAD_Sheets\D570A87-sht-plan-SB.dgn

Kaskaskia Engineering Group, LLC
PROFESSIONAL REGISTRATIONS: Illinois Professional Design Firm; Professional Engineering Group
LICENSE NO.: 184-000792; 20-3101586
209 E. Main St., Suite 300, Belleville, Illinois 62220; 618.233.5677 phone; 618.233.5677 fax; www.kaskaskiaeng.com

USER NAME = jwarner	DESIGNED -	REVISED -	
	DRAWN -	REVISED -	
PLOT SCALE = 0.16666633 ' / in.	CHECKED -	REVISED -	
PLOT DATE = 3/24/2023	DATE -	REVISED -	

STATE OF ILLINOIS
DEPARTMENT OF TRANSPORTATION

FAI 57 (I–57)
SB PLAN AND PROFILE

SCALE: 1"=50' | SHEET 6 OF 7 SHEETS | STA. 125+00.00 TO STA. 140+00.00

F.A.I. RTE.	SECTION	COUNTY	TOTAL SHEETS	SHEET NO.
57	(10-30)BR	CHAMPAIGN	107	26

CONTRACT NO. 70A87

ILLINOIS | FED. AID PROJECT

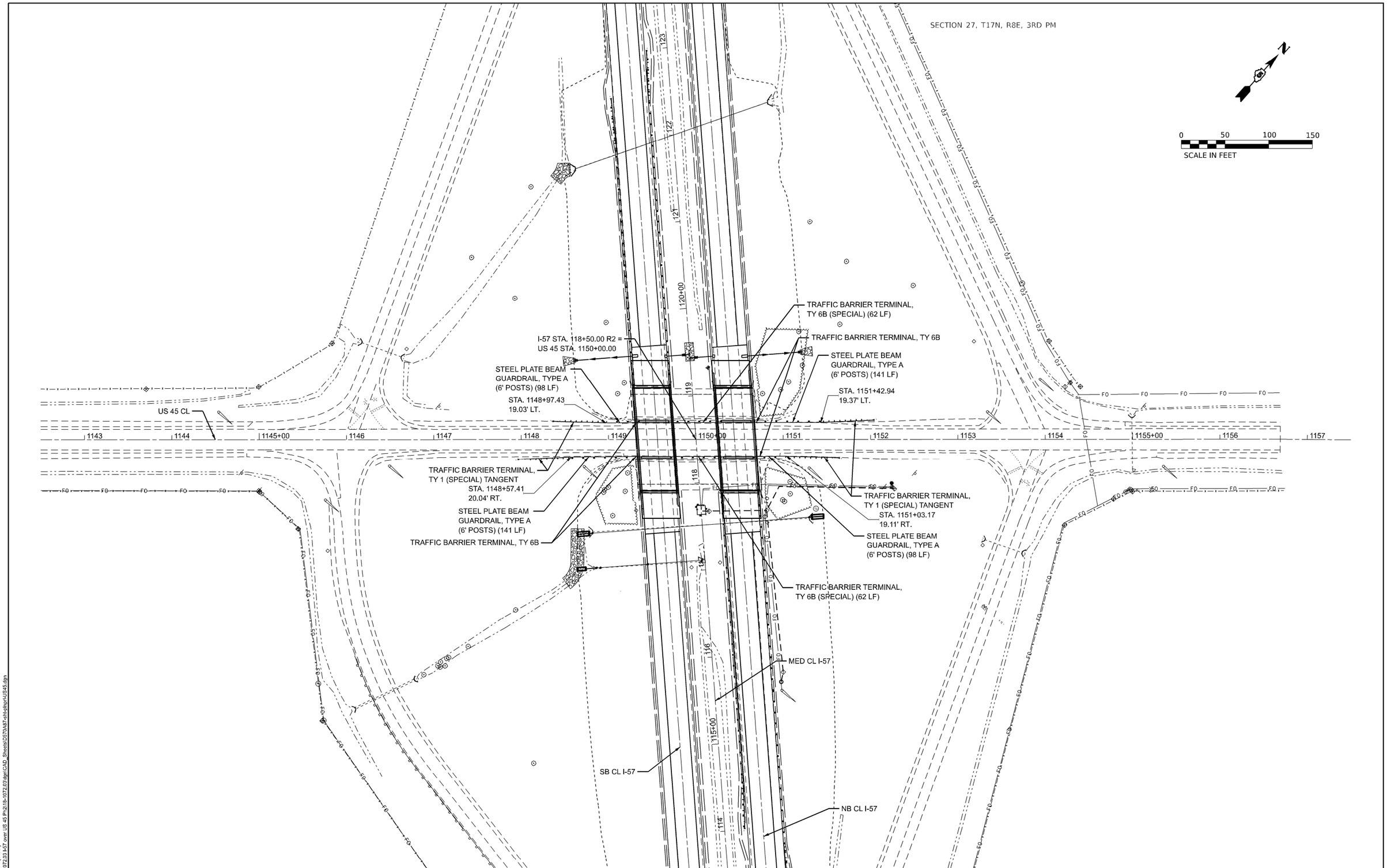

MODEL: US45 - Plan 1 [Sheet]
FILE NAME: P:\18-1072.03 I-57 over US 45 P\218-1072.03\dgn\CAD_Sheets\D570A87-sht-bhpr-rt-US45.dgn

Kaskaskia Engineering Group, LLC
PROFESSIONAL REGISTRATIONS: Illinois Professional Design Firm 184-004773; Professional Engineering Group 20-3088586
LICENSE NO.
20 E. Main St., Suite 300 Belleville, Illinois 62220 618.233.5677 phone 618.233.5677 fax www.kaskaskiaeng.com

USER NAME = jwarner	DESIGNED -	REVISED -	
	DRAWN -	REVISED -	
PLOT SCALE = 0.16666633 ' / in.	CHECKED -	REVISED -	
PLOT DATE = 3/31/2023	DATE -	REVISED -	

STATE OF ILLINOIS
DEPARTMENT OF TRANSPORTATION

FAI 57 (I–57)
US 45 PLAN SHEET

SCALE: 1"=50' | SHEET 7 OF 7 SHEETS | STA. 1142+50.00 TO STA. 1157+50.00

F.A.I. RTE.	SECTION	COUNTY	TOTAL SHEETS	SHEET NO.
57	(10-30)BR	CHAMPAIGN	107	27
		CONTRACT NO. 70A87		
	ILLINOIS	FED. AID PROJECT		

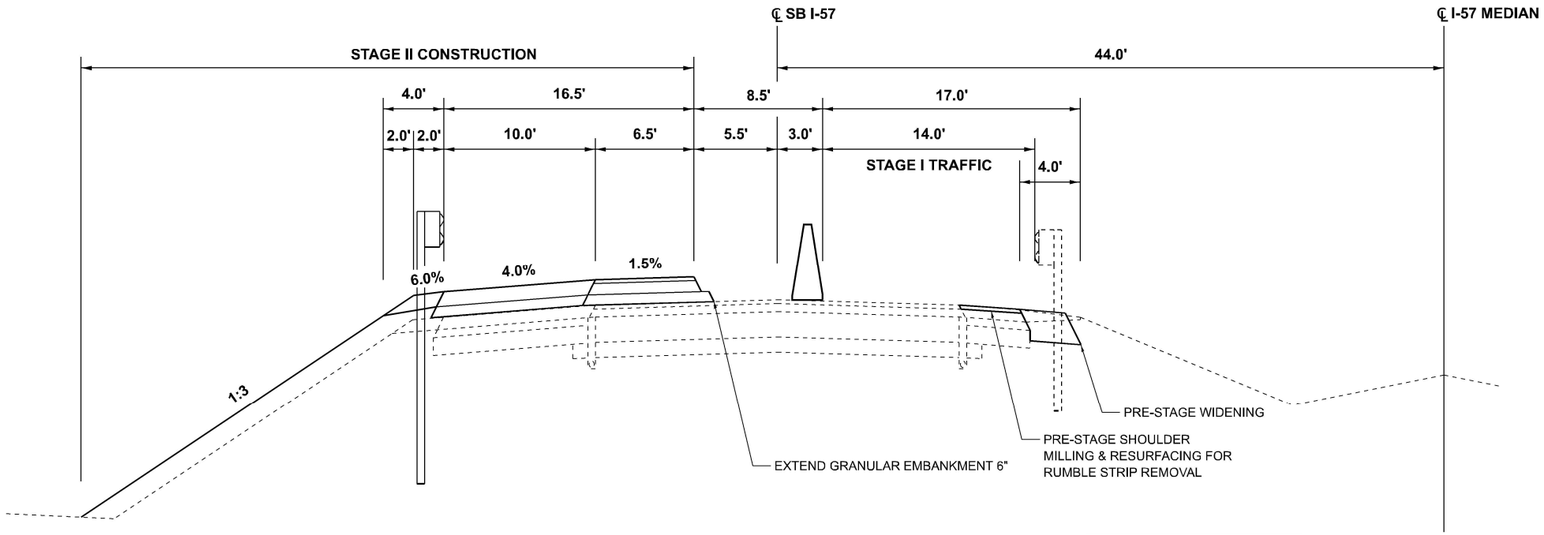

STAGE I

STA. 110+34.39 TO STA. 124+02.58

EX SN 010-0199 (LT) STA. 117+91 TO STA. 119+15 ±

EX SN 010-0198 (RT) STA. 117+85 TO STA. 119+09 ±

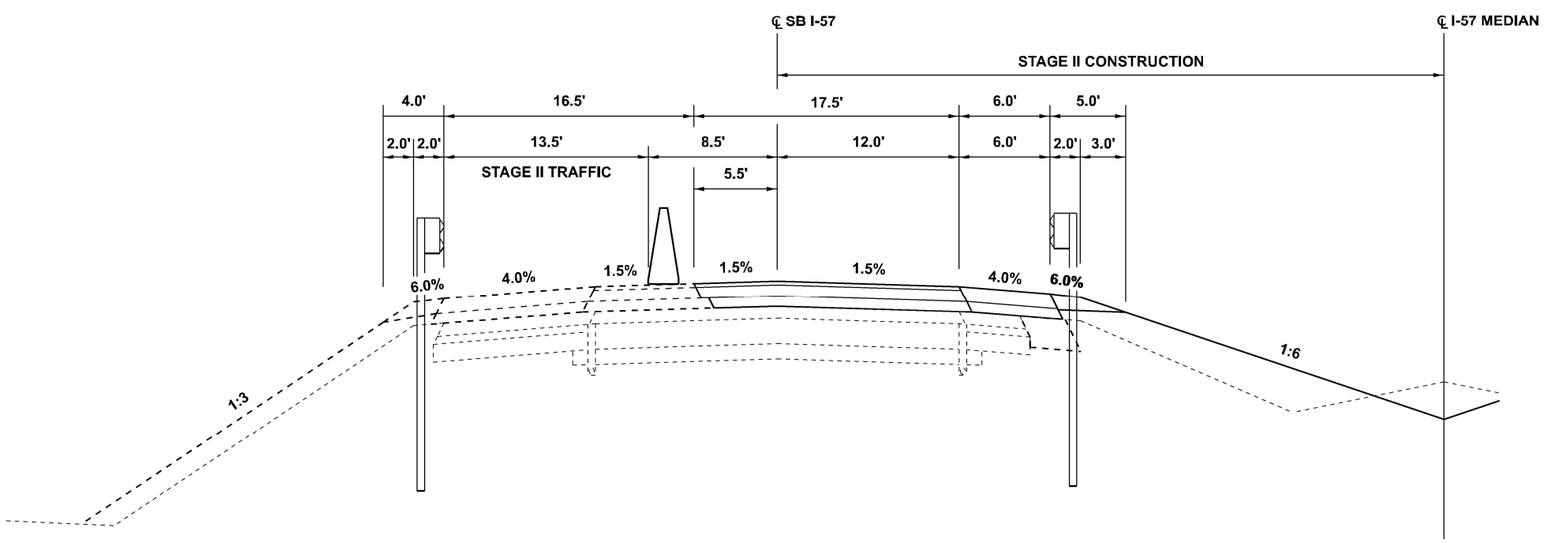

STAGE II

STA. 110+34.39 TO STA. 124+02.58

BRIDGE APPROACH SLAB (LT) STA. 117+62.46 TO STA. 117+92.46 STA. 119+13.96 TO STA. 119+43.96

BRIDGE APPROACH SLAB (RT) STA. 117+56.02 TO STA. 117+86.02 STA. 119+07.52 TO STA. 119+37.52

PR SN 010-0199 (LT) STA. 117+92.46 TO STA. 119+13.96

PR SN 010-0198 (LT) STA. 117+86.02 TO STA. 119+07.52

STAGING NOTES

PRELIMINARY STAGE

1. IN THE PRELIMINARY STAGE, MILL AND RESURFACE 1.5" OF HMA SHOULDERS AND WIDEN HMA SHOULDERS 4' TO ACCOMMODATE STAGED TRAFFIC. MAINTAIN ONE LANE OF TRAFFIC IN EACH DIRECTION ON EXISTING LANES.

2. PERFORM BRIDGE DECK PATCHING ACCORDING TO THE PRE-STAGE PATCHING DETAIL SHEET.

STAGE 1

1. IN STAGE 1, INSTALL TEMPORARY CONCRETE BARRIER (TCB) AND SHEET PILE AS NECESSARY. SHIFT TRAFFIC TO THE INSIDE LANE IN EACH DIRECTION. BREAK BITUMINOUS SURFACE ON THE OUTSIDE LANE AND SHOULDER AND PLACE GRANULAR EMBANKMENT. REMOVE SUPERSTUCTURE, EXTEND PIERS AND ABUTMENTS, AND CONSTRUCT BRIDGE DECK AND PARAPET WITHIN STAGE LIMITS. PLACE HMA BINDER, SURFACE, AND SHOULDER ON THE OUTSIDE OF THE ROADWAY. UPON COMPLETION OF THE BRIDGE, PAVEMENT, AND SHOULDER, THE CONTRACTOR SHALL CONSTRUCT THE PROPOSED AGGREGATE SHOULDER AND GUARDRAIL, EXTEND THE EXISTING CULVERTS, REPLACE THE HEADWALLS, AND PROVIDE OUTSIDE EARTH EMBANKMENT.

STAGE 2

1. UPON COMPLETION OF STAGE 1, SHIFT TRAFFIC ONTO NEW PAVEMENT IN EACH DIRECTION FOR STAGE 2. BREAK BITUMINOUS SURFACE ON THE INSIDE LANE AND SHOULDER AND PLACE GRANULAR EMBANKMENT. REMOVE AND REPLACE INSIDE PORTION OF BRIDGES AND PLACE HMA BINDER, SURFACE, AND SHOULDER ON THE INSIDE OF THE ROADWAY. PROVIDE MEDIAN EARTH EXCAVATION AND EMBANKMENT TO MATCH PROPOSED SHOULDER ELEVATIONS.

FINISHING STAGE

1. UPON COMPLETION OF STAGE 2, PLACE PAVEMENT MARKINGS AND COMPLETE MISCELLANEOUS ROADSIDE WORK, INCLUDING NEW GUARDRAIL AND AGGREGATE SHOULDER.

MODEL: Typical Sections [Sheet1-57]
FILE NAME: P:\18-1072.03-I-57 over US 45 Ph2\18-1072.03\dgn\CAD_Sheets\D570\A57-sht-MOT_typicals.dgn

Kaskaskia Engineering Group, LLC
PROFESSIONAL REGISTRATIONS: Illinois Professional Design Firm 184.004773; Professional Engineering Group 20-1010586
LICENSE NO.
299 E. Main St., Suite 300, Belleville, IL 62220
618.233.5675 phone
618.233.5677 fax
www.kaskaskiaeng.com

USER NAME = jwarner	DESIGNED -	REVISED -	
	DRAWN -	REVISED -	
PLOT SCALE = 0.16666633 ' / in.	CHECKED -	REVISED -	
PLOT DATE = 3/24/2023	DATE -	REVISED -	

STATE OF ILLINOIS
DEPARTMENT OF TRANSPORTATION

FAI 57 (I–57)
STAGING TYPICAL SECTIONS

SCALE: | SHEET 1 OF 2 SHEETS | STA. TO STA.

F.A. I. RTE.	SECTION	COUNTY	TOTAL SHEETS	SHEET NO.
57	(10-30)BR	CHAMPAIGN	107	28
		CONTRACT NO. 70A87		
	ILLINOIS	FED. AID PROJECT		

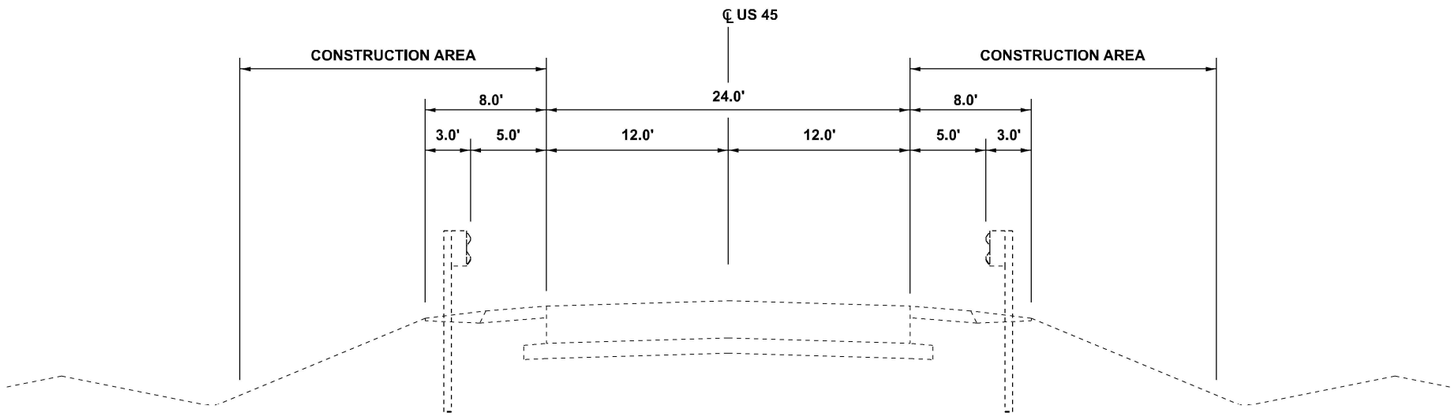

STAGE III (US 45)

STA. 1147+85.67 TO STA. 1152+15.12

STAGING NOTES

STAGE 3

1. REMOVE GUARDRAIL ALONG US 45 AND REPLACE WITH PROPOSED GUARDRAIL. PERFORM ANY SHOULDER WORK ASSOCIATED WITH GUARDRAIL INSTALLATION.

MODEL: Typical Sections [Sheet-US 45]
FILE NAME: P:\18-1072.03-I-57 over US 45 Ph2\18-1072.03\dgn\CAD_Sheets\D570A87-sht-MOT-typicals.dgn

Kaskaskia Engineering Group, LLC
PROFESSIONAL REGISTRATIONS
Illinois Professional Design Firm 184.004773
Professional Engineering Group 28-3048006

USER NAME = jwarner	DESIGNED -	REVISED -	
	DRAWN -	REVISED -	
PLOT SCALE = 0.16666633 ' / in.	CHECKED -	REVISED -	
PLOT DATE = 3/24/2023	DATE -	REVISED -	

STATE OF ILLINOIS
DEPARTMENT OF TRANSPORTATION

FAI 57 (I–57)
STAGING TYPICAL SECTIONS – US 45

SCALE: | SHEET 2 OF 2 SHEETS | STA. | TO STA.

F.A.I. RTE.	SECTION	COUNTY	TOTAL SHEETS	SHEET NO.
57	(10-30)BR	CHAMPAIGN	107	29

CONTRACT NO. 70A87

ILLINOIS | FED. AID PROJECT

PRE–STAGE PATCHING DETAIL
S.N. 010–0198 (NB) S.N. 010–0199 (SB)

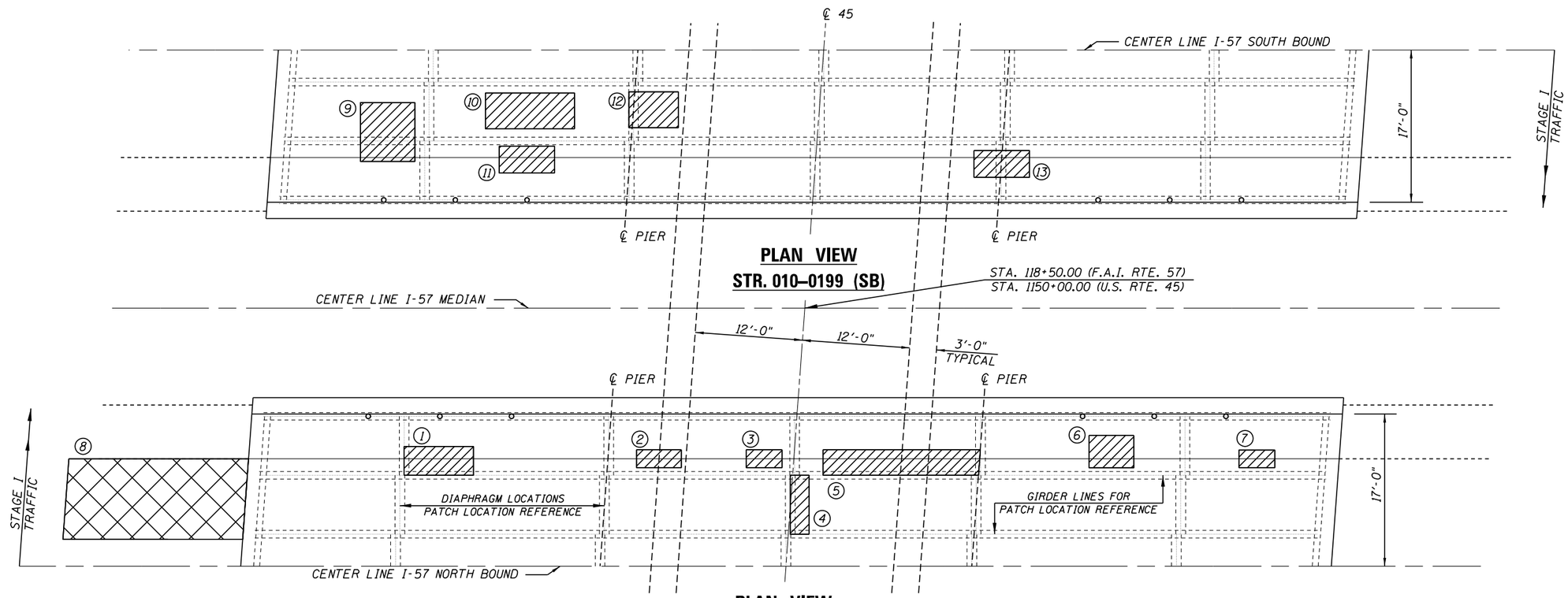

S.N. 010–0198

PATCH NO.	SIZE L. FT. * W. FT.	DECK SLAB REPAIR (PART DEPTH) SQ YD	DECK SLAB REPAIR (FD TY 1) SQ YD	DECK SLAB REPAIR (FD TY 2) SQ YD	APPROACH SLAB REPAIR (PD) SQ YD
1	8.0 X 3.0			2.7	
2	5.0 X 2.0			1.1	
3	3.0 X 2.0			0.9	
4	2.0 X 6.5			1.5	
5	18.0 X 3.0			6.0	
6	5.0 X 4.0			2.3	
7	4.0 X 2.0			0.9	
8	20.0 X 9.0				20.0

S.N. 010–0199

PATCH NO.	SIZE L. FT. * W. FT.	DECK SLAB REPAIR (PART DEPTH) SQ YD	DECK SLAB REPAIR (FD TY 1) SQ YD	DECK SLAB REPAIR (FD TY 2) SQ YD	APPROACH SLAB REPAIR (PD) SQ YD
9	6.0 X 6.0			4.0	
10	10.0 X 4.0			4.5	
11	6.0 X 3.0			2.0	
12	5.0 X 4.0			2.3	
13	6.0 X 3.0			2.0	

Notes

Deck Survey performed on February 24, 2023.
Method of Survey visual.

Quantities for Protective Shield included with structure plans.

Longitudinal removal for deck slab repair (full-depth, type II) must be done in alternating sections of no more than 10 feet. Adjacent sections must not be removed until both of the following requirements are met:

- *at least 72 hours shall have elapsed from the end of the previous pour, and*
- *the concrete shall have attained a minimum modulus of rupture of 650 psi or a minimum compressive strength of 3500 psi.*

LEGEND

APPROACH SLAB REPAIR (PARTIAL DEPTH)

DECK SLAB REPAIR (FULL DEPTH, TYPE II)

BILL OF MATERIALS

ITEM	UNIT	TOTAL
DECK SLAB REPAIR (FULL DEPTH, TYPE II)	SQ YD	30.2
APPROACH SLAB REPAIR (PARTIAL DEPTH)	SQ YD	20.0

MODEL: $MODELNAME$
FILE NAME: pw://illinois-pw.bentley.com:PWIDOT\Documents\IDOT Offices\District 5\Projects\D570A87\CADData\Structures\D570A87_sht_Bridge_Patching.dgn

USER NAME = eric.shawler	DESIGNED -	REVISED -	
	DRAWN -	REVISED -	
PLOT SCALE = 40.0000 ' / in.	CHECKED -	REVISED -	
PLOT DATE = 3/1/2023	DATE -	REVISED -	

STATE OF ILLINOIS
DEPARTMENT OF TRANSPORTATION

PRE–STAGE PATCHING DETAIL
S.N. 010–0198 (NB) S.N. 010–0199 (SB)

SCALE: | SHEET 1 OF 1 SHEETS | STA. TO STA.

F.A.I. RTE.	SECTION	COUNTY	TOTAL SHEETS	SHEET NO.
57	(10-30)BR	CHAMPAIGN		
		CONTRACT NO. 70A87		
		ILLINOIS FED. AID PROJECT		

WIDTH RESTRICTION SIGNING

1. WIDTH RESTRICTION SIGNING SHALL BE PLACED AT EACH END OF THE PROJECT, ALONG INTERSTATE 57, AT SUFFICIENT DISTANCE TO PROVIDE MOTORISTS WITH ADEQUATE WARNING. EXACT PLACEMENT SHALL BE DETERMINED BY THE ENGINEER.
2. WIDTH RESTRICTION SIGNING SHALL FOLLOW DISTRICT 5 DETAIL NO. X7200201 AND SHALL STATE A WIDTH OF 12'-6" FOR STAGE 1 AND A WIDTH OF 12'-0" FOR STAGE 2.

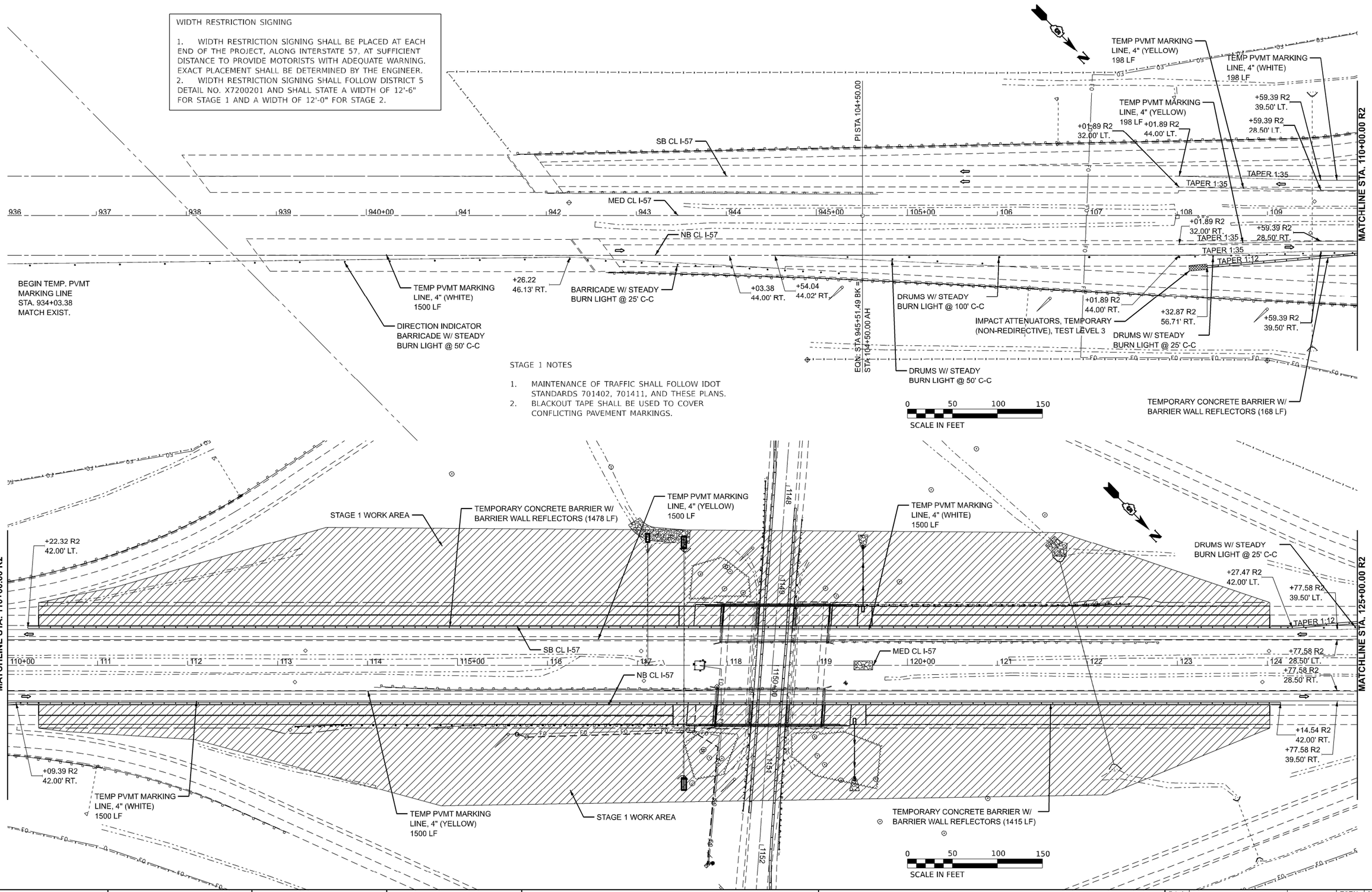

MODEL: ExCL - MOT Stage 1-1 [Sheet]
FILE NAME: P:\18-1072.03 I-57 over US 45 PI\218-1072.03\dgn\CAD_Sheets\D570A87-sht-MOTStage1.dgn

Kaskaskia Engineering Group, LLC
PROFESSIONAL REGISTRATIONS
Illinois Professional Design Firm 184.004773
Professional Engineering Group 20-5080086
LICENSE NO.
20 E. Main St., Suite 300
Belleville, Illinois 62220
618.233.5672 phone
618.233.5677 fax
www.kaskaskiaeng.com

USER NAME = jwarner	DESIGNED -	REVISED -	
	DRAWN -	REVISED -	
PLOT SCALE = 0.16666633 ' / in.	CHECKED -	REVISED -	
PLOT DATE = 3/31/2023	DATE -	REVISED -	

STATE OF ILLINOIS
DEPARTMENT OF TRANSPORTATION

FAI 57 (I-57)
MAINTENANCE OF TRAFFIC – STAGE 1

SCALE: 1" = 50' | SHEET 2 OF 8 SHEETS | STA. 936+01.49 TO STA. 125+00.00

F.A.I. RTE.	SECTION	COUNTY	TOTAL SHEETS	SHEET NO.
57	(10-30)BR	CHAMPAIGN	107	31
		CONTRACT NO. 70A87		
		ILLINOIS	FED. AID PROJECT	

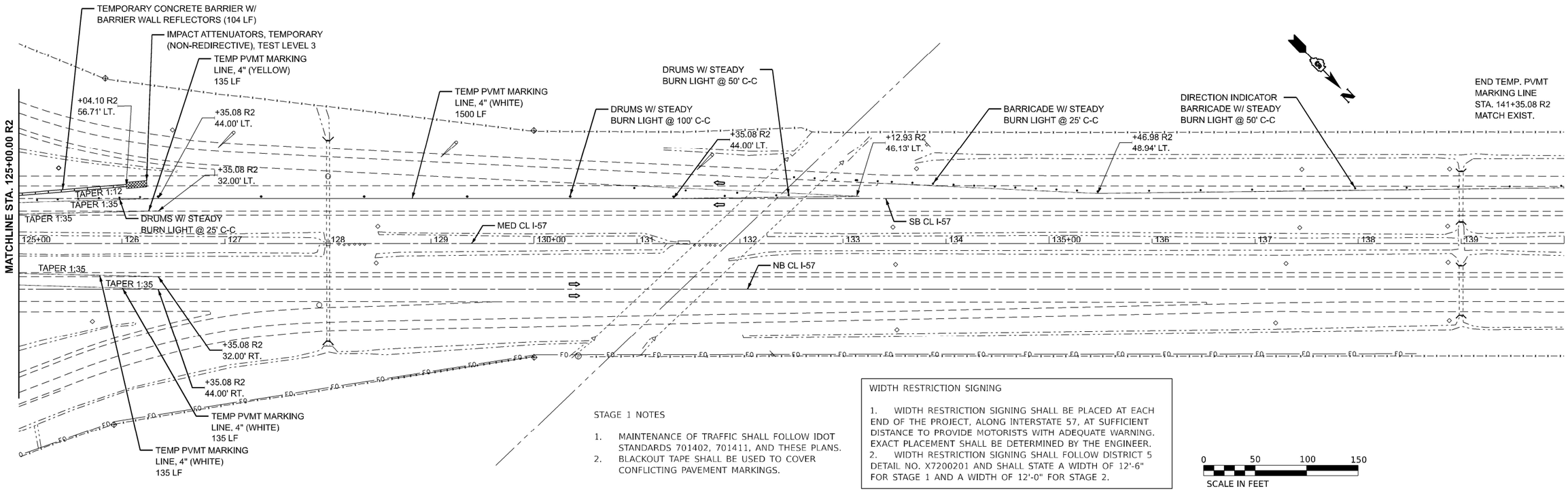

STAGE 1 NOTES

1. MAINTENANCE OF TRAFFIC SHALL FOLLOW IDOT STANDARDS 701402, 701411, AND THESE PLANS.
2. BLACKOUT TAPE SHALL BE USED TO COVER CONFLICTING PAVEMENT MARKINGS.

WIDTH RESTRICTION SIGNING

1. WIDTH RESTRICTION SIGNING SHALL BE PLACED AT EACH END OF THE PROJECT, ALONG INTERSTATE 57, AT SUFFICIENT DISTANCE TO PROVIDE MOTORISTS WITH ADEQUATE WARNING. EXACT PLACEMENT SHALL BE DETERMINED BY THE ENGINEER.
2. WIDTH RESTRICTION SIGNING SHALL FOLLOW DISTRICT 5 DETAIL NO. X7200201 AND SHALL STATE A WIDTH OF 12'-6" FOR STAGE 1 AND A WIDTH OF 12'-0" FOR STAGE 2.

0 50 100 150
SCALE IN FEET

MODEL: ExCL - MOT Stage 1-3 [Sheet]
FILE NAME: P:\18-1072.03-I-57 over US 45 Ph2\18-1072.03.dgn\CAD_Sheets\D570A87-sht-MOTStage1.dgn

Kaskaskia Engineering Group, LLC
PROFESSIONAL REGISTRATIONS
Illinois Professional Design Firm 184-001773
Professional Engineering Group 28-1040006
LICENSE NO.
299 E. Main St., Suite 300
Belleville, IL 62220
618.233.5672 phone
618.233.5677 fax
www.kaskaskiieng.com

USER NAME = jwarner	DESIGNED -	REVISED -	
	DRAWN -	REVISED -	
PLOT SCALE = 0.16666633 ' / in.	CHECKED -	REVISED -	
PLOT DATE = 3/24/2023	DATE -	REVISED -	

STATE OF ILLINOIS
DEPARTMENT OF TRANSPORTATION

FAI 57 (I–57)
MAINTENANCE OF TRAFFIC – STAGE 1

SCALE: 1" = 50' | SHEET 3 OF 8 SHEETS | STA. 125+00.00 TO STA. 140+00.00

F.A.I. RTE.	SECTION	COUNTY	TOTAL SHEETS	SHEET NO.
57	(10-30)BR	CHAMPAIGN	107	32
		CONTRACT NO. 70A87		
		ILLINOIS	FED. AID PROJECT	

WIDTH RESTRICTION SIGNING

1. WIDTH RESTRICTION SIGNING SHALL BE PLACED AT EACH END OF THE PROJECT, ALONG INTERSTATE 57, AT SUFFICIENT DISTANCE TO PROVIDE MOTORISTS WITH ADEQUATE WARNING. EXACT PLACEMENT SHALL BE DETERMINED BY THE ENGINEER.
2. WIDTH RESTRICTION SIGNING SHALL FOLLOW DISTRICT 5 DETAIL NO. X7200201 AND SHALL STATE A WIDTH OF 12'-6" FOR STAGE 1 AND A WIDTH OF 12'-0" FOR STAGE 2.

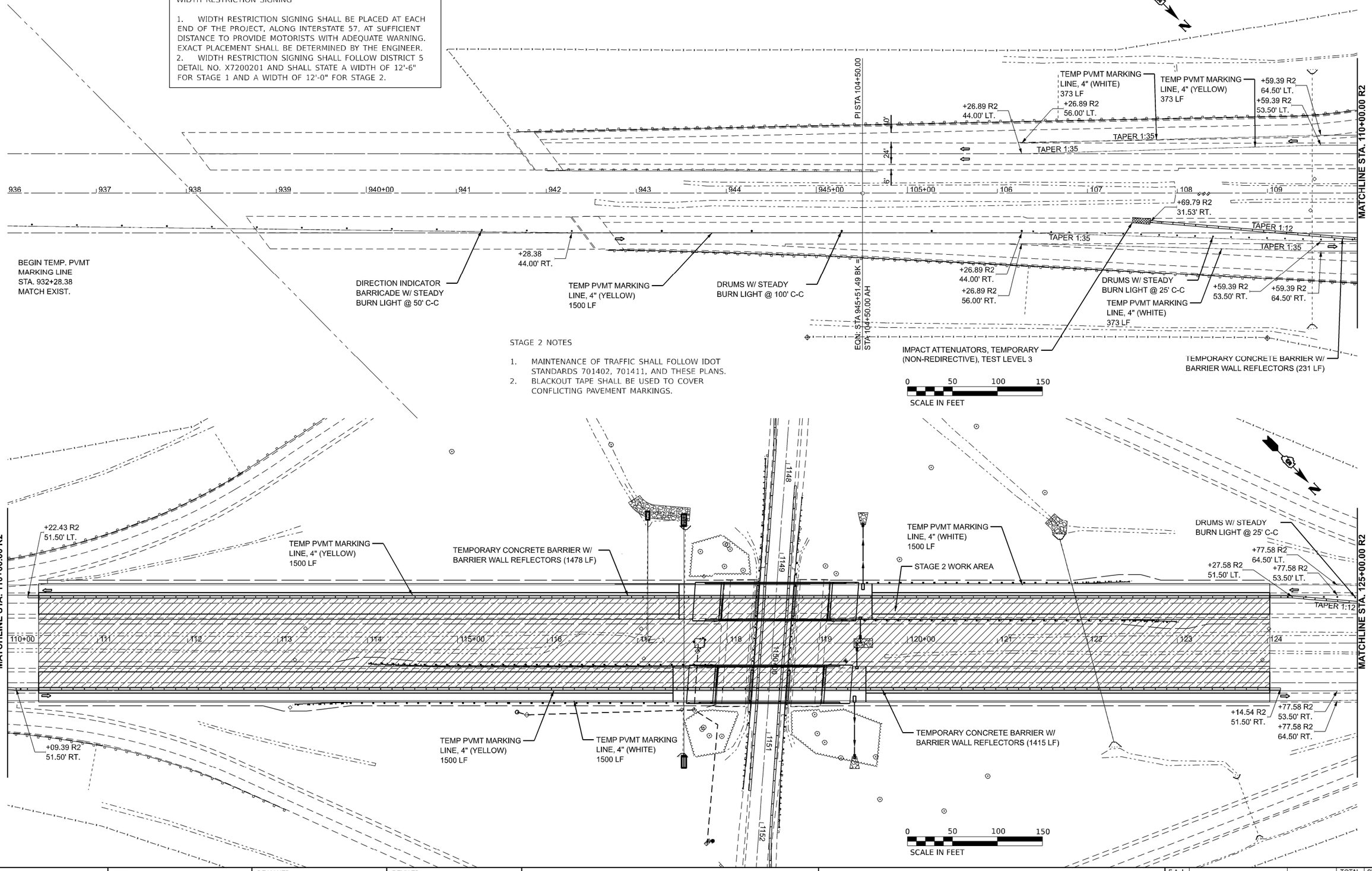

STAGE 2 NOTES

1. MAINTENANCE OF TRAFFIC SHALL FOLLOW IDOT STANDARDS 701402, 701411, AND THESE PLANS.
2. BLACKOUT TAPE SHALL BE USED TO COVER CONFLICTING PAVEMENT MARKINGS.

MODEL: ExCL Stage 2 - MOT Stage 2-1 [Sheet]
FILE NAME: P:\18-1072.03 I-57 over US 45 Pt\2\18-1072.03\dgn\CAD_Sheets\D570A87-sht-MOTStage2.dgn

Kaskaskia Engineering Group, LLC
PROFESSIONAL REGISTRATIONS
Illinois Professional Design Firm 184.004773
Professional Engineering Group 20-5080086
LICENSE NO.
104 E. Main St., Suite 300
Belleville, Illinois 62220
618.233.5672 phone
618.233.5677 fax
www.kaskaskiaeng.com

USER NAME = jwarner	DESIGNED -	REVISED -	
	DRAWN -	REVISED -	
PLOT SCALE = 0.16666633 ' / in.	CHECKED -	REVISED -	
PLOT DATE = 3/31/2023	DATE -	REVISED -	

STATE OF ILLINOIS
DEPARTMENT OF TRANSPORTATION

FAI 57 (I-57)
MAINTENANCE OF TRAFFIC – STAGE 2

SCALE: 1"=50' | SHEET 4 OF 8 SHEETS | STA. 936+01.49 TO STA. 125+00.00

F.A. I. RTE.	SECTION	COUNTY	TOTAL SHEETS	SHEET NO.
57	(10-30)BR	CHAMPAIGN	107	33
		CONTRACT NO. 70A87		
		ILLINOIS	FED. AID PROJECT	

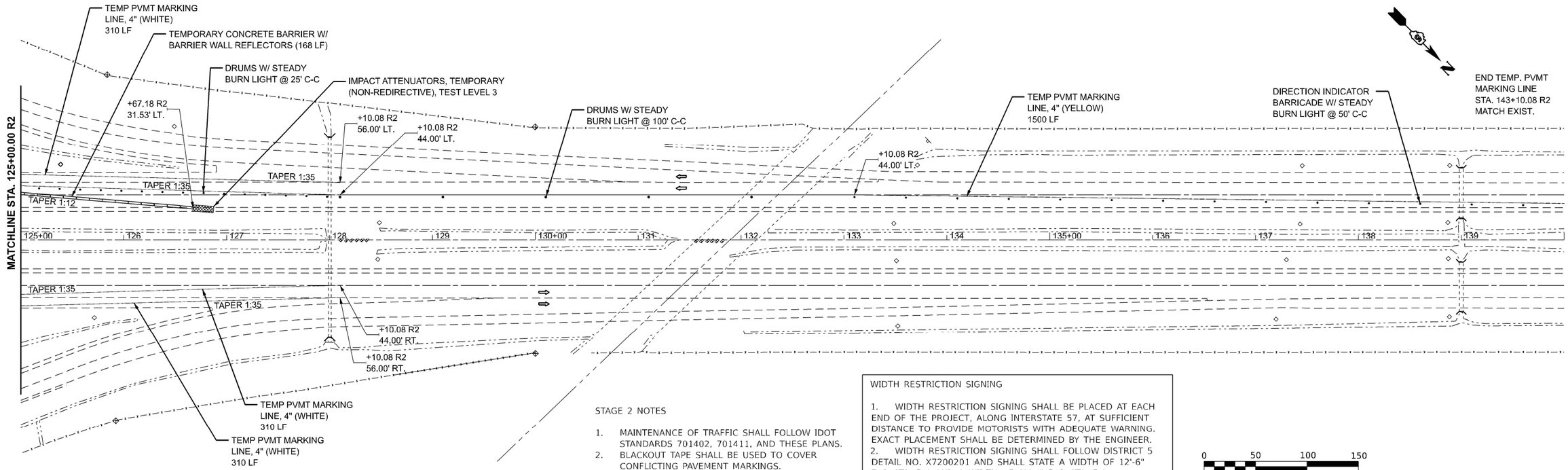

STAGE 2 NOTES

1. MAINTENANCE OF TRAFFIC SHALL FOLLOW IDOT STANDARDS 701402, 701411, AND THESE PLANS.
2. BLACKOUT TAPE SHALL BE USED TO COVER CONFLICTING PAVEMENT MARKINGS.

WIDTH RESTRICTION SIGNING

1. WIDTH RESTRICTION SIGNING SHALL BE PLACED AT EACH END OF THE PROJECT, ALONG INTERSTATE 57, AT SUFFICIENT DISTANCE TO PROVIDE MOTORISTS WITH ADEQUATE WARNING. EXACT PLACEMENT SHALL BE DETERMINED BY THE ENGINEER.
2. WIDTH RESTRICTION SIGNING SHALL FOLLOW DISTRICT 5 DETAIL NO. X7200201 AND SHALL STATE A WIDTH OF 12'-6" FOR STAGE 1 AND A WIDTH OF 12'-0" FOR STAGE 2.

0 50 100 150
SCALE IN FEET

MODEL: ExCL Stage 2 - MOT Stage 2-3 [Sheet]
FILE NAME: P:\18-1072.03-I-57 over US 45 Ph2\18-1072.03\dgn\CAD_Sheets\D570A87-sht-MOTstage2.dgn

Kaskaskia Engineering Group, LLC
PROFESSIONAL REGISTRATIONS
Illinois Professional Design Firm 184-0793
Professional Engineering Group 28-5040006
LICENSE NO.
299 E. Main St., Suite 300
Belleville, IL 62220
618.233.5672 phone
618.233.5677 fax
www.kaskaskiieng.com

USER NAME = jwarner	DESIGNED -	REVISED -	
	DRAWN -	REVISED -	
PLOT SCALE = 0.16666633 ' / in.	CHECKED -	REVISED -	
PLOT DATE = 3/24/2023	DATE -	REVISED -	

STATE OF ILLINOIS
DEPARTMENT OF TRANSPORTATION

FAI 57 (I–57)
MAINTENANCE OF TRAFFIC – STAGE 2

SCALE: 1"=50' | SHEET 5 OF 8 SHEETS | STA. 125+00.00 TO STA. 140+00.00

F.A.I. RTE.	SECTION	COUNTY	TOTAL SHEETS	SHEET NO.
57	(10-30)BR	CHAMPAIGN	107	34
		CONTRACT NO. 70A87		
	ILLINOIS	FED. AID PROJECT		

www.invarion.com

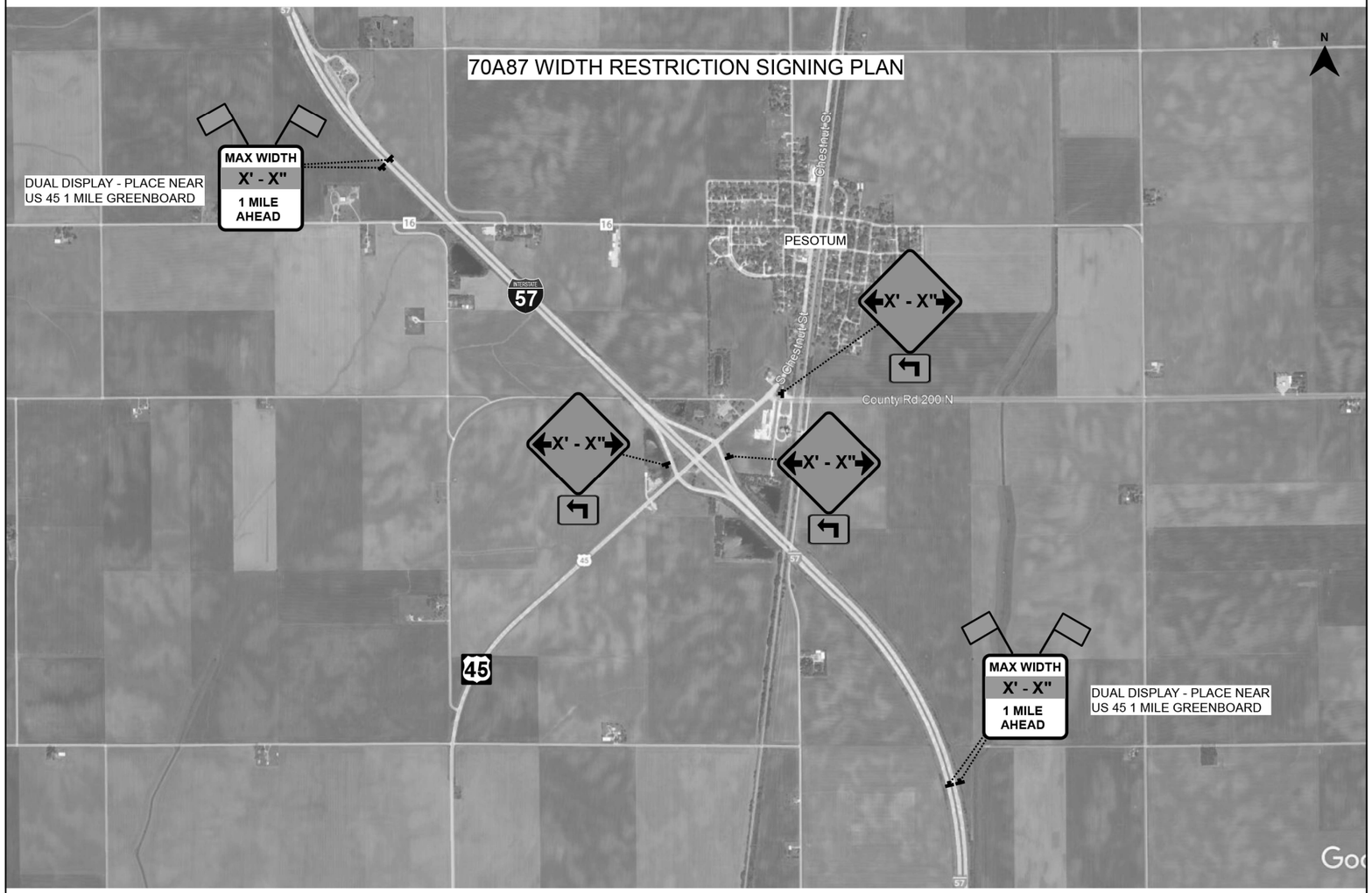

DESIGNER NOTE: PROVIDE MAP WITH SIGN LOCATIONS (A, B, ETC.) AND COORDINATE WITH TRAFFIC OPERATIONS ENGINEER.

INCLUDE DISTRICT SPECIAL PROVISION -"WIDTH RESTRICTION SIGNING"

MODEL: Width Restriction Signing Plan 1
FILE NAME: P:\18-1072.03 I-57 over US 45 PI\218-1072.03\dgn\CAD_Sheets\D570A87-sht-details.dgn

Kaskaskia Engineering Group, LLC
PROFESSIONAL REGISTRATIONS: Illinois Professional Design Firm, Professional Engineering Group
LICENSE NO. 184-004773, 28-3088586

USER NAME = jwarner	DESIGNED -	REVISED -	
	DRAWN -	REVISED -	
PLOT SCALE = 0.16666633 ' / in.	CHECKED -	REVISED -	
PLOT DATE = 3/24/2023	DATE -	REVISED -	

STATE OF ILLINOIS
DEPARTMENT OF TRANSPORTATION

WIDTH RESTRICTION SIGNING PLAN

SCALE: | SHEET 6 OF 8 SHEETS | STA. | TO STA.

F.A.I. RTE.	SECTION	COUNTY	TOTAL SHEETS	SHEET NO.
57	(10-30)BR	CHAMPAIGN	107	35
		CONTRACT NO. 70A87		
		ILLINOIS	FED. AID PROJECT	

DESIGNER NOTE: PROVIDE MAP WITH SIGN LOCATIONS (A, B, ETC.) AND COORDINATE WITH TRAFFIC OPERATIONS ENGINEER.

INCLUDE DISTRICT SPECIAL PROVISION -"WIDTH RESTRICTION SIGNING"

www.invarion.com

MODEL: - Width Restriction Signing Plan 2
FILE NAME: P:\18-1072.03 I-57 over US 45 Pt2\18-1072.03\dgn\CAD_Sheets\D570A87-ath-details.dgn

Kaskaskia Engineering Group, LLC
299 E. Main St., Suite 300
Belleville, Illinois 62220
618.233.5677 phone
618.233.5677 fax
www.kaskaskiaeng.com
PROFESSIONAL REGISTRATIONS: Illinois Professional Design Firm Professional Engineering Group
LICENSE NO.: 184-004773 28-3048586

USER NAME = jwarner	DESIGNED -	REVISED -	
	DRAWN -	REVISED -	
PLOT SCALE = 0.16666633 ' / in.	CHECKED -	REVISED -	
PLOT DATE = 3/24/2023	DATE -	REVISED -	

STATE OF ILLINOIS
DEPARTMENT OF TRANSPORTATION

WIDTH RESTRICTION SIGNING PLAN

SCALE: | SHEET 7 OF 8 SHEETS | STA. | TO STA.

F.A.I. RTE.	SECTION	COUNTY	TOTAL SHEETS	SHEET NO.
57	(10-30)BR	CHAMPAIGN	107	36
		CONTRACT NO. 70A87		
		ILLINOIS	FED. AID PROJECT	

DESIGNER NOTE: PROVIDE MAP WITH SIGN LOCATIONS (A, B, ETC.) AND COORDINATE WITH TRAFFIC OPERATIONS ENGINEER.

INCLUDE DISTRICT SPECIAL PROVISION -"WIDTH RESTRICTION SIGNING"

www.invarion.com

MODEL: Width Restriction Signing Plan 3
FILE NAME: P:\18-1072.03 I-57 over US 45 Ph2\18-1072.03\dgn\CAD_Sheets\D570A87-sht-details.dgn

Kaskaskia Engineering Group, LLC
PROFESSIONAL REGISTRATIONS: Illinois Professional Design Firm, Professional Engineering Group
LICENSE NO.: 184-004773, 28-3018586

USER NAME = jwarner	DESIGNED -	REVISED -	
	DRAWN -	REVISED -	
PLOT SCALE = 0.16666833 ' / in.	CHECKED -	REVISED -	
PLOT DATE = 3/24/2023	DATE -	REVISED -	

STATE OF ILLINOIS
DEPARTMENT OF TRANSPORTATION

WIDTH RESTRICTION SIGNING PLAN

SCALE: | SHEET 8 OF 8 SHEETS | STA. | TO STA.

F.A.I. RTE.	SECTION	COUNTY	TOTAL SHEETS	SHEET NO.
57	(10-30)BR	CHAMPAIGN	107	37
		CONTRACT NO. 70A87		
		ILLINOIS	FED. AID PROJECT	

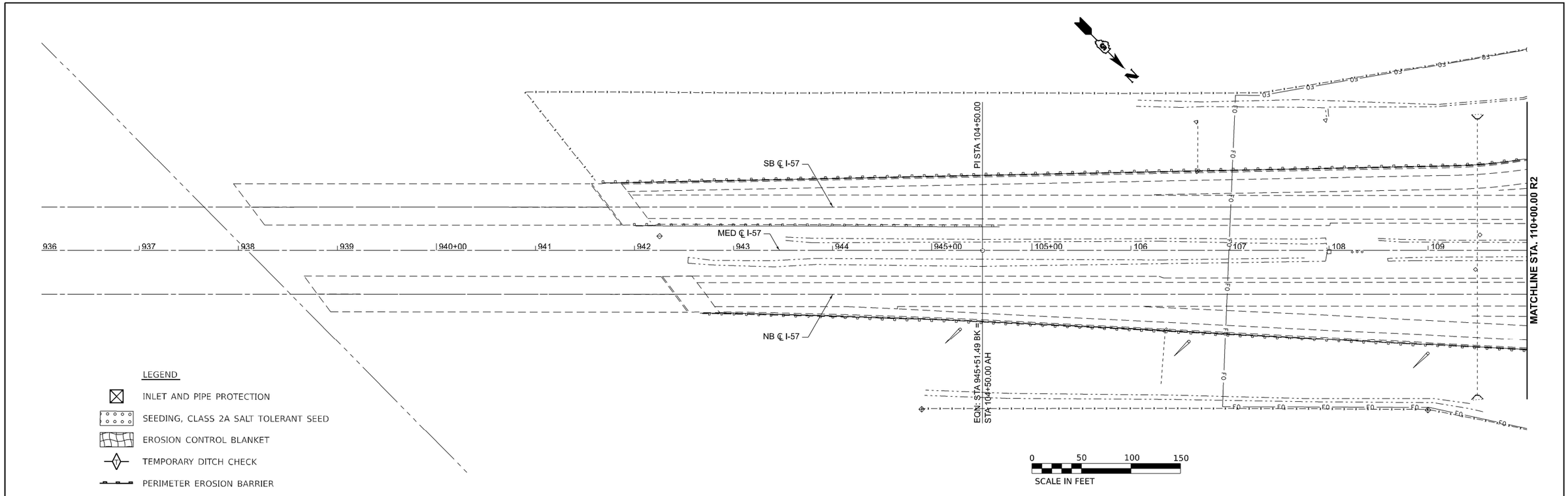

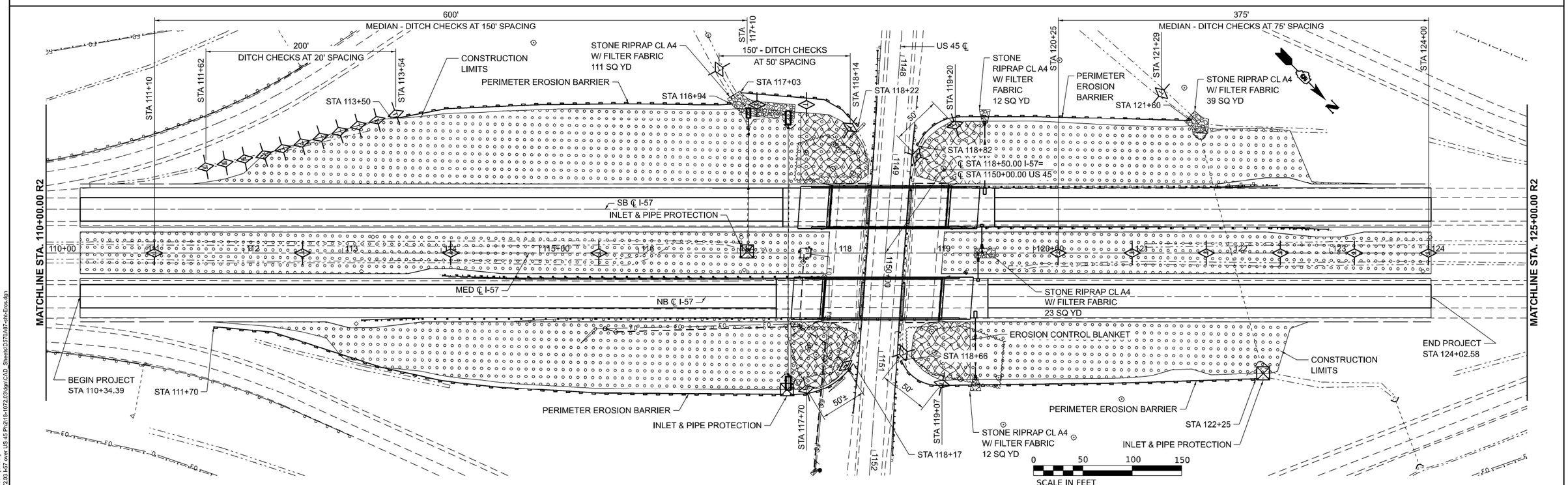

MODEL: ExCL_NB - Eros 1 [Sheet]
FILE NAME: P:\18-072.03 I-57 over US 45 Pt2\18-072.03\dgn\CAD_Sheets\D570A87-alt-Eros.dgn

Kaskaskia Engineering Group, LLC
PROFESSIONAL REGISTRATIONS: Illinois Professional Design Firm, Professional Engineering Group
LICENSE NO: 184-004773, 28-3080586

234 S. Main St., Suite 300
Bloomington, IL 61701
618.233.5677 phone
618.233.5977 fax
www.kaskaskiaeng.com

USER NAME = jwarner	DESIGNED -	REVISED -
	DRAWN -	REVISED -
PLOT SCALE = 0.16666633 ' / in.	CHECKED -	REVISED -
PLOT DATE = 3/31/2023	DATE -	REVISED -

STATE OF ILLINOIS
DEPARTMENT OF TRANSPORTATION

FAI 57 (I–57)
EROSION CONTROL PLAN

SCALE: 1"= 50' | SHEET 1 OF 2 SHEETS | STA. 936+01.49 TO STA. 125+00.00

F.A. I. RTE.	SECTION	COUNTY	TOTAL SHEETS	SHEET NO.
57	(10-30)BR	CHAMPAIGN	107	38
		CONTRACT NO. 70A87		
		ILLINOIS	FED. AID PROJECT	

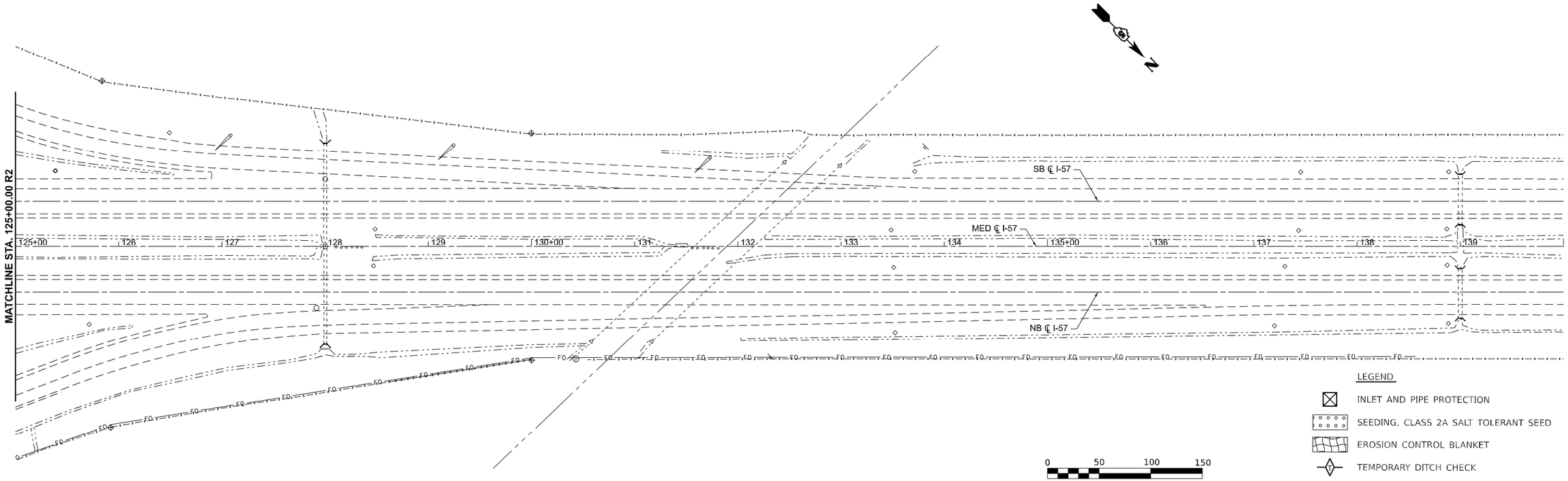

LEGEND

- INLET AND PIPE PROTECTION
- SEEDING, CLASS 2A SALT TOLERANT SEED
- EROSION CONTROL BLANKET
- TEMPORARY DITCH CHECK
- PERIMETER EROSION BARRIER

MODEL: ExCL_NB - Eros 3 [Sheet]
FILE NAME: P:\18-1072.03 I-57 over US 45 Ph2\18-1072.03\dgn\CAD_Sheets\D270A87-alt-Eros.dgn

Kaskaskia Engineering Group, LLC
PROFESSIONAL REGISTRATIONS
Illinois Professional Design Firm 184-001873
Professional Engineering Group 20-3080586
LICENSE NO.
234 E. Main St., Suite 300
Belleville, IL 62220
618.233.5677 phone
618.233.5977 fax
www.kaskaskiaeng.com

USER NAME = jwarner	DESIGNED -	REVISED -
	DRAWN -	REVISED -
PLOT SCALE = 0.16666633 ' / in.	CHECKED -	REVISED -
PLOT DATE = 3/24/2023	DATE -	REVISED -

STATE OF ILLINOIS
DEPARTMENT OF TRANSPORTATION

FAI 57 (I–57)
EROSION CONTROL PLAN

SCALE: 1"= 50' | SHEET 2 OF 2 SHEETS | STA. 125+00.00 TO STA. 140+00.00

F.A.I. RTE.	SECTION	COUNTY	TOTAL SHEETS	SHEET NO.
57	(10-30)BR	CHAMPAIGN	107	39
		CONTRACT NO. 70A87		
	ILLINOIS	FED. AID PROJECT		

Benchmark: 5049-1, Chiseled square on Northwest corner of controller box foundation, in southeast quadrant of I-57 and U.S. 45. Sta. 1152+23.98; 50.29' RT. - Elevation 705.989.

S.N. 010-0198, 010-0199 Dual structures were built in 1963 as FAI Rte. 57, Section 10-30 HB at Station 118+50. The superstructure consists of a 7" reinforced concrete slab with a 2" microsilica concrete wearing surface on seven 27WF84 beams supported by two piers on pile-supported footings and stub abutments on concrete piles. The structures measure 121'-9" from back-to-back of abutments and 43'-8" out-to-out. The existing superstructure is to be removed and replaced and the existing substructure is to be repaired. Traffic is to be maintained using stage construction.

No salvage.

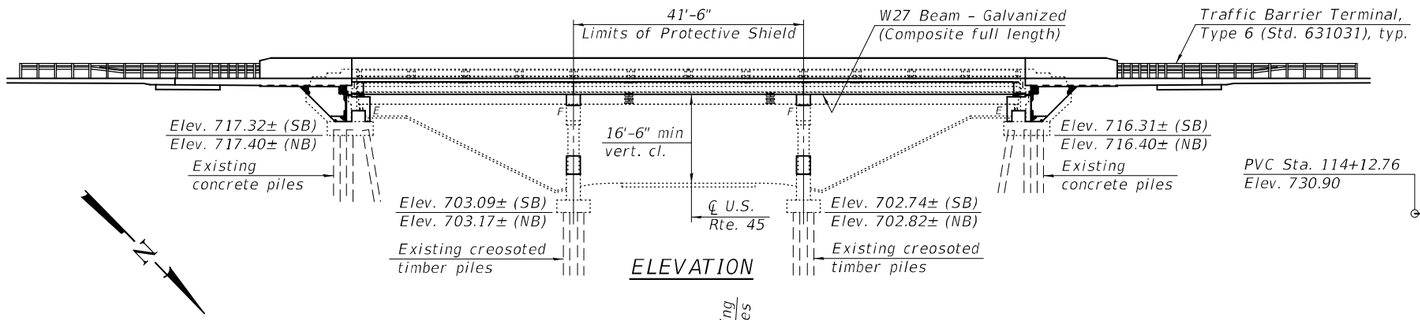

ELEVATION

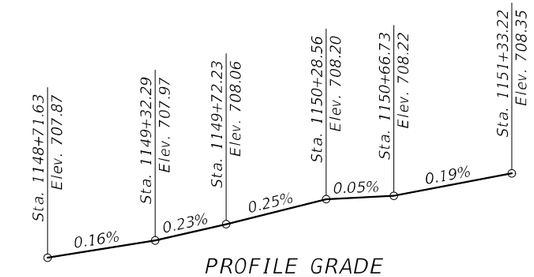

PROFILE GRADE

Along U.S. 45

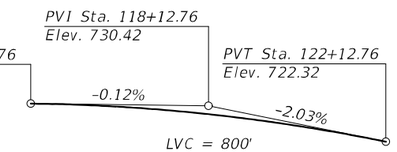

PROFILE GRADE

Along ℄ I-57

Notes:

Up to ¼" may be ground off the bridge deck and the bridge approach slabs.

The profile grade shows the final elevations after grinding.

DESIGN SPECIFICATIONS

(New Construction)
2020 AASHTO LRFD Bridge Design Specifications, 9th Edition

DESIGN STRESSES

FIELD UNITS (New Construction)

f'c = 3,500 psi
f'c = 4,000 psi (Superstructure Concrete)
fy = 50,000 psi (AASHTO M270 Grade 50)
fy = 60,000 psi (Reinforcement)
All Structural Steel shall be galvanized.

FIELD UNITS (Existing Construction)

f'c = 3,500 psi
fy = 40,000 psi (Reinforcement)

LOADING HL-93

Allow 50#/sq. ft. for future wearing surface.

SEISMIC DATA

Seismic Performance Category (SPC) = A
Horizontal Bedrock Acceleration Coefficient (A) = .048g
Site Coefficient (S) = 1.0

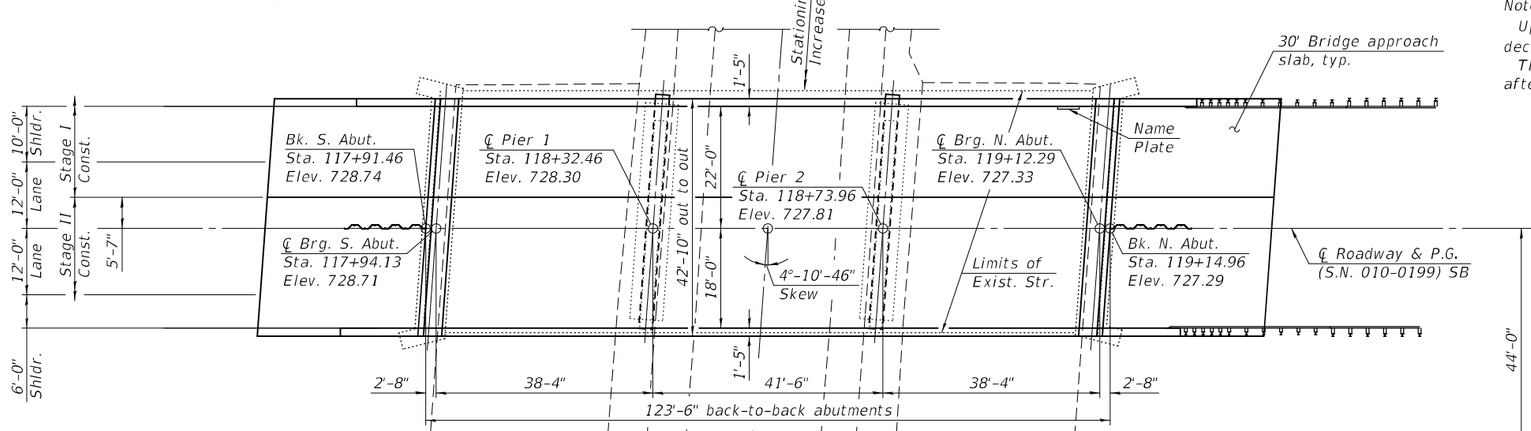

PLAN

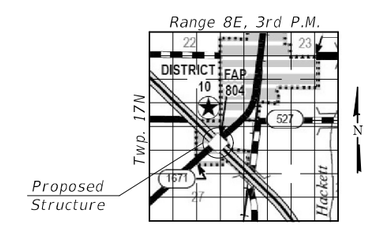

LOCATION SKETCH

PRE-FINAL

GENERAL PLAN & ELEVATION
I-57 OVER U.S. RTE. 45
F.A.I. RTE. 57 - SEC (10-30)BR
CHAMPAIGN COUNTY
STATION 118+50.00
STRUCTURE NO. 010-0198 (NB)
STRUCTURE NO. 010-0199 (SB)

DESIGNED -	RYAN P. NEGANGARD	EXAMINED	ENGINEER OF BRIDGE DESIGN
CHECKED -	DAVID H. RICHTER	PASSED	ENGINEER OF BRIDGES AND STRUCTURES
DRAWN -	DENNIS A. POP	DATE -	
CHECKED -	R.P.N. / D.H.R. / G.R.A.	REVISED -	
		REVISED -	

STATE OF ILLINOIS
DEPARTMENT OF TRANSPORTATION

SHEET 1 OF 42 SHEETS

F.A.I. RTE.	SECTION	COUNTY	TOTAL SHEETS	SHEET NO.
57	(10-30)BR	CHAMPAIGN	00	00

CONTRACT NO. 70A87
ILLINOIS FED. AID PROJECT

MODEL: 0100198-70A87-001
FILE NAME: pw:\\ildot-pw.bentley.com:PWIDOT\Documents\IDOT Offices\Bureau of Bridges and Structures\Projects\0100198\CADD Plans\0100198_70A87.dgn
9/16/2022 12:55:48 PM

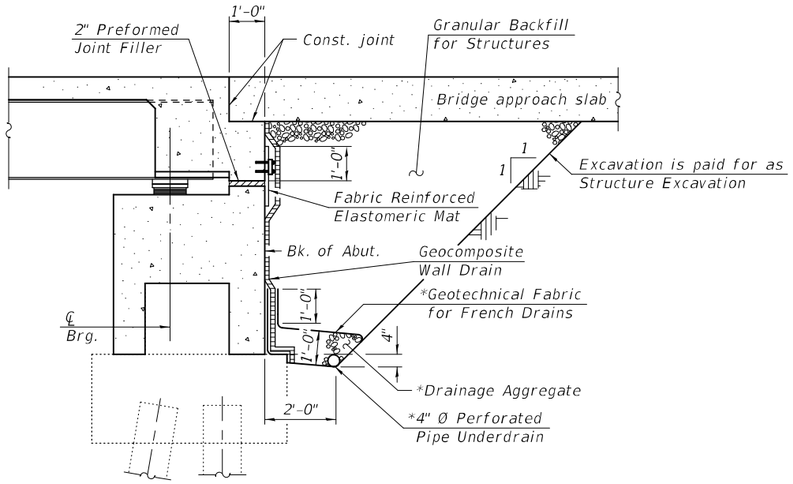

SECTION THRU SEMI-INTEGRAL ABUTMENT

(Horiz. dim. @ Rt. ∠'s)

*Included in the cost of Pipe Underdrains for Structures.

Notes:

All drainage system components shall extend to each wingwall except an outlet pipe shall extend until intersecting with the side slopes. The pipes shall drain into concrete headwalls. (See Article 601.05 of the Standard Specifications and Highway Standard 601101).

Core hole thru each exterior wingwall for 4" Ø perforated pipe underdrain to outlet.

GENERAL NOTES

Fasteners shall be ASTM F3125 Grade A325 Type 1. Fasteners shall be hot dip galvanized. See Special Provisions for "Hot Dip Galvanizing for Structural Steel. Bolts ⅞" Ø, holes 15/16" Ø, unless otherwise noted.

All new structural steel shall be galvanized. See Special Provisions for "Hot Dip Galvanizing for Structural Steel."

Calculated weight of Structural Steel = 154,420 (M270 Grade 50)

Calculated weight of Structural Steel = 37,830 (M270 Grade 36)

No field welding is permitted except as specified in the contract documents.

Reinforcement bars designated (E) shall be epoxy coated.

Plan dimensions and details relative to existing plans are subject to nominal construction variations. The Contractor shall field verify existing dimensions and details affecting new construction and make necessary approved adjustments prior to construction or ordering of materials. Such variations shall not be cause for additional compensation for a change in scope of the work, however, the Contractor will be paid for the quantity actually furnished at the unit price bid for the work.

Bearing seat surfaces shall be constructed or adjusted to the designated elevations within a tolerance of ⅛ inch (0.01 ft.). Adjustment shall be made either by grinding the surface or by shimming the bearings.

The existing structural steel coating contains lead. The Contractor shall take appropriate precautions to deal with the presence of lead on this project.

The finishing machine rails shall be placed on the top of the top flange of the exterior beams within the deck pour. Beam blocks shall be placed between beams at all tie locations in each bay for the full width of the deck pour.

STATION 118+50.00
RE-BUILT 20 BY
STATE OF ILLINOIS
F.A.I. RTE. 57 SEC. (10-30)BR
LOADING HL-93
STRUCTURE NO. 010-0198

STATION 118+50.00
RE-BUILT 20 BY
STATE OF ILLINOIS
F.A.I. RTE. 57 SEC. (10-30)BR
LOADING HL-93
STRUCTURE NO. 010-0199

NAME PLATE

See Std. 515001

Existing Name Plates shall be cleaned and relocated next to new Name Plates. Cost included with Name Plates.

INDEX OF SHEETS

TOTAL BILL OF MATERIAL

ITEM	UNIT	SUPER	SUB	TOTAL
Removal of Existing Superstructures	Each	2		2
Concrete Removal	Cu. Yd.		37.4	37.4
Protective Shield	Sq. Yd.	403		403
Structure Excavation	Cu. Yd.		477	477
Concrete Structures	Cu. Yd.		223.8	223.8
Concrete Superstructure	Cu. Yd.	414.0		414.0
Protective Coat	Sq. Yd.	1923		1923
Concrete Superstructure (Approach Slab)	Cu. Yd.	239.4		239.4
Furnishing and Erecting Structural Steel	L. Sum	1		1
Stud Shear Connectors	Each	10248		10248
Reinforcement Bars, Epoxy Coated	Pound	193140	19860	213000
Bar Splicers	Each	1210	248	1458
Name Plates	Each	2		2
Elastomeric Bearing Assembly, Type I	Each	28		28
Anchor Bolts, ⅞"	Each	56		56
Anchor Bolts, 1"	Each	56		56
Temporary Sheet Piling	Sq. Ft.		962	962
Granular Backfill for Structures	Cu. Yd.		290	290
Concrete Sealer	Sq. Ft.		644	644
Geocomposite Wall Drain	Sq. Yd.		195	195
Bridge Deck Grooving (Longitudinal)	Sq. Yd.	968		968
Structural Repair of Concrete (Depth Equal to or Less Than 5 Inches)	Sq. Ft.		48	48
Diamond Grinding (Bridge Section)	Sq. Yd.	1716		1716
Pipe Underdrains for Structures 4"	Foot		245	245

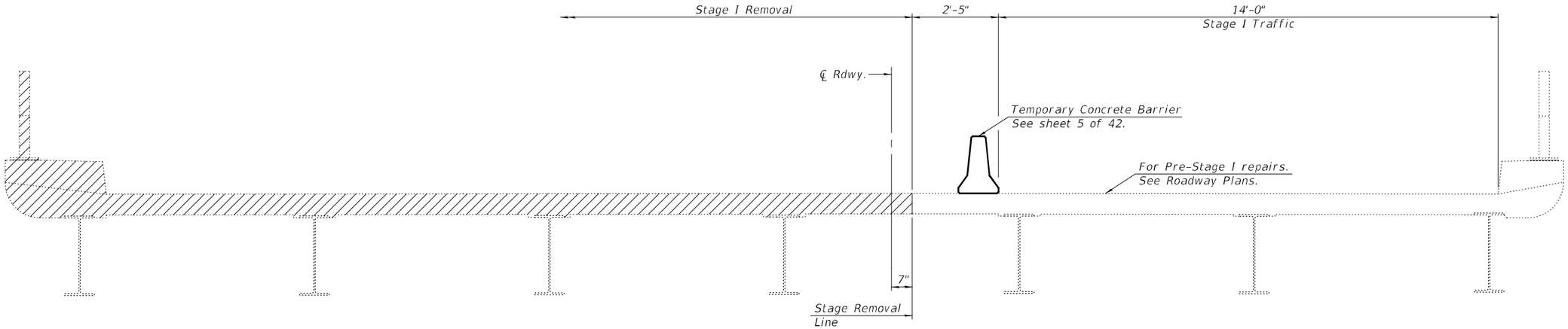

STAGE I REMOVAL

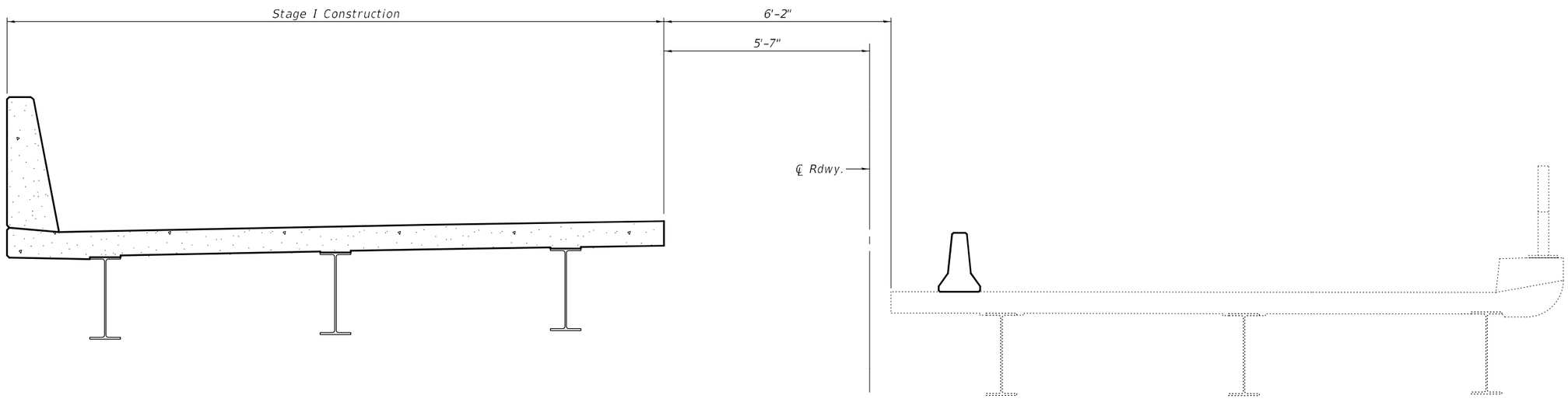

STAGE I CONSTRUCTION

Notes:
All staging cross sections are for SN 010-0199 (SB), looking North. SN 010-0198 (NB) similar by 180° rotation
For quantity of Temporary Concrete Barrier, see Roadway Plans.
Hatched area indicates Removal of Existing Superstructures.

(Sheet 1 of 2)

MODEL: 0100198-70A87-003
FILE NAME: pw:\\ildot-pw.bentley.com:PWIDOT\Documents\IDOT Offices\Bureau of Bridges and Structures\Projects\0100198\CADD Plans\0100198_70A87.dgn
5/17/2023 2:00:37 PM

DESIGNED -	RYAN P. NEGANGARD	EXAMINED	ENGINEER OF BRIDGE DESIGN
CHECKED -	DAVID H. RICHTER	PASSED	ENGINEER OF BRIDGES AND STRUCTURES
DRAWN -	DENNIS A. POP	DATE -	MAY 16, 2023
CHECKED -	R.P.N. / D.H.R. / G.R.A.	REVISED -	
		REVISED -	

STATE OF ILLINOIS
DEPARTMENT OF TRANSPORTATION

STAGE CONSTRUCTION DETAILS
STRUCTURE NO. 010-0198 (NB) & 010-0199 (SB)

SHEET 3 OF 42 SHEETS

F.A.I. RTE.	SECTION	COUNTY	TOTAL SHEETS	SHEET NO.
57	(10-30)BR	CHAMPAIGN	107	42
		CONTRACT NO. 70A87		
		ILLINOIS	FED. AID PROJECT	

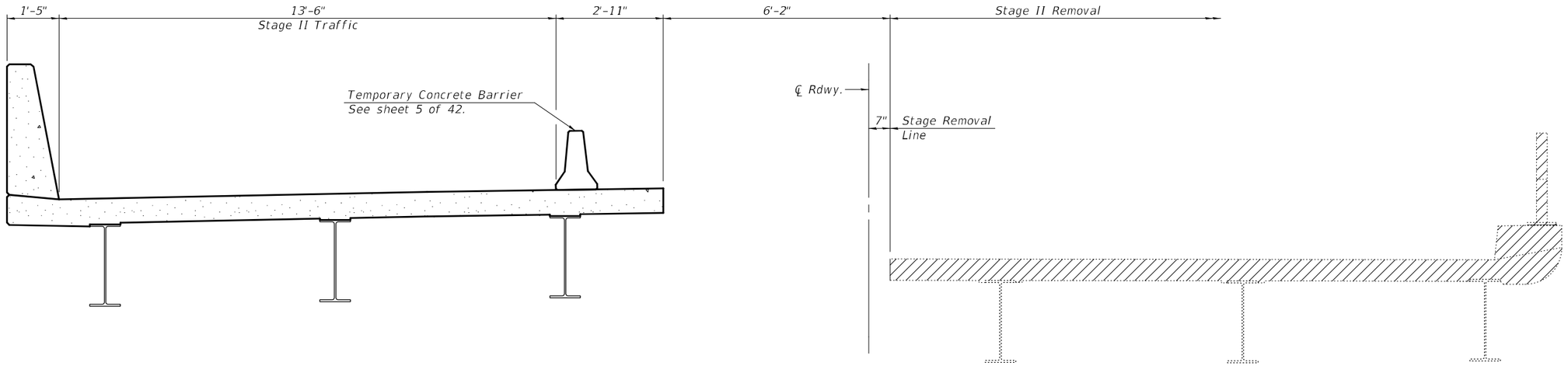

STAGE II REMOVAL

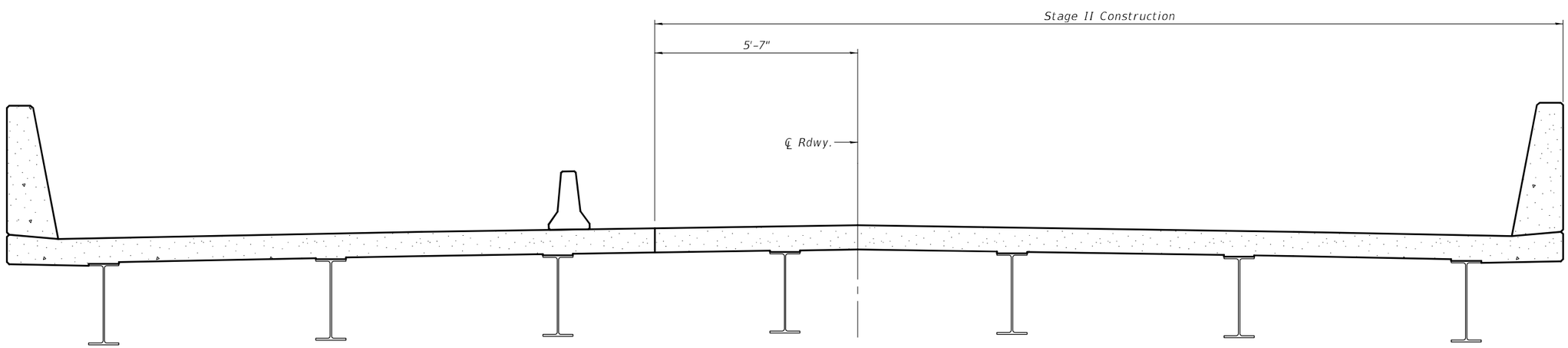

STAGE II CONSTRUCTION

(Sheet 2 of 2)

DESIGNED -	RYAN P. NEGANGARD	EXAMINED	ENGINEER OF BRIDGE DESIGN
CHECKED -	DAVID H. RICHTER	PASSED	ENGINEER OF BRIDGES AND STRUCTURES
DRAWN -	DENNIS A. POP	DATE -	MAY 16, 2023
CHECKED -	R.P.N. / D.H.R. / G.R.A.	REVISED -	
		REVISED -	

STATE OF ILLINOIS
DEPARTMENT OF TRANSPORTATION

STAGE CONSTRUCTION DETAILS
STRUCTURE NO. 010-0198 (NB) & 010-0199 (SB)

SHEET 4 OF 42 SHEETS

F.A.I. RTE.	SECTION	COUNTY	TOTAL SHEETS	SHEET NO.
57	(10-30)BR	CHAMPAIGN	107	43

CONTRACT NO. 70A87

ILLINOIS | FED. AID PROJECT

MODEL: 0100198-70A87-004
FILE NAME: pw:\\ildot-pw.bentley.com:PWIDOT\Documents\IDOT Offices\Bureau of Bridges and Structures\Projects\0100198\CADD Plans\0100198_70A87.dgn
5/17/2023 2:00:38 PM

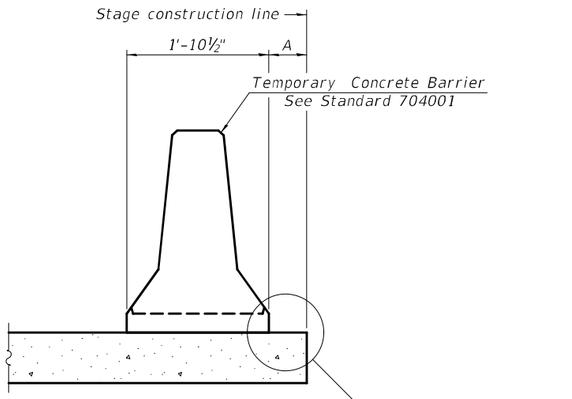

When "A" is 3'-1" or less, the temporary concrete barrier shall be restrained to the new slab according to Detail I, II or III. No restraint is required when "A" is greater than 3'-1".

NEW SLAB OR NEW DECK BEAM

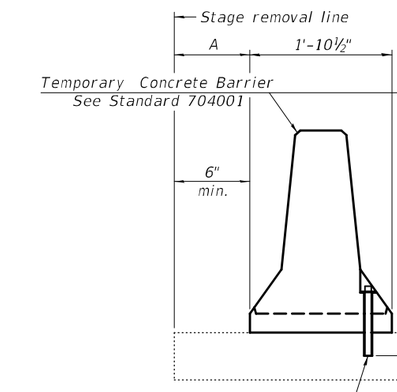

Drill 3-1¼" Ø Holes in existing slab for 1" Ø restraining pins. Traffic side only. Cost of restraining pins are included with Temporary Concrete Barrier. No restraint is required when "A" is greater than 3'-1".

EXISTING SLAB

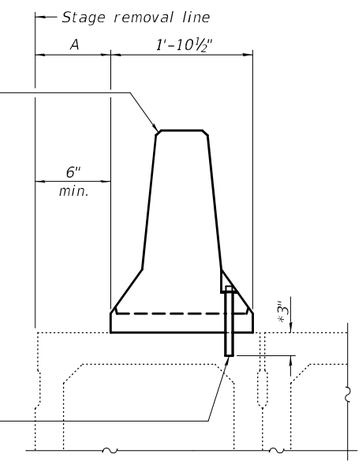

* When hot-mix asphalt wearing surface is present, embedment shall be 3" plus the wearing surface depth.

EXISTING DECK BEAM

SECTIONS THRU SLAB OR DECK BEAM

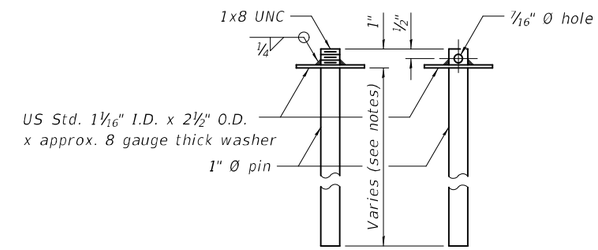

RESTRAINING PIN

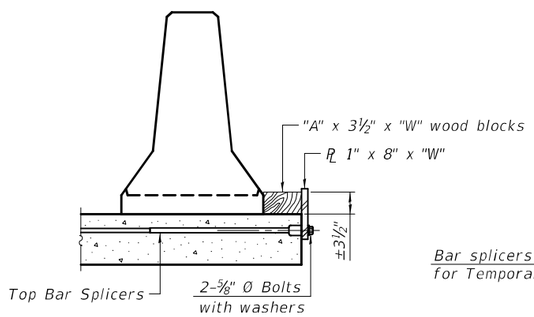

DETAIL I

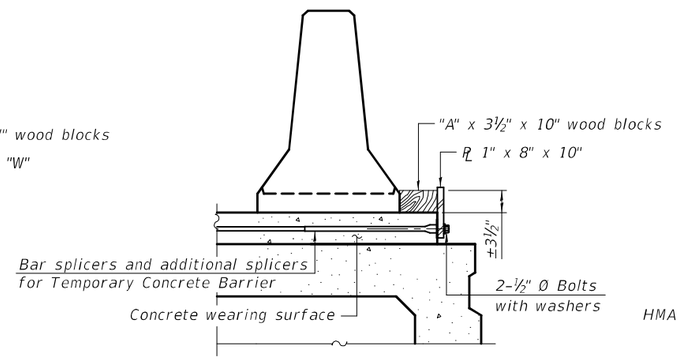

DETAIL II

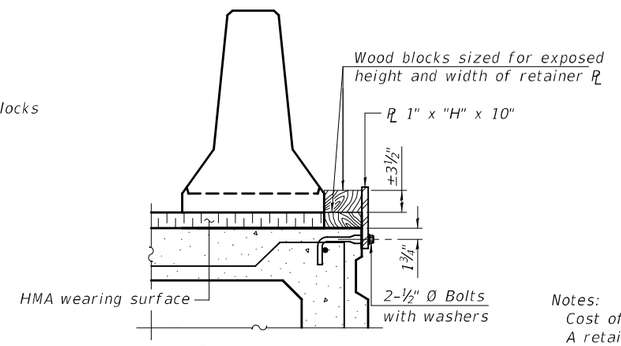

DETAIL III

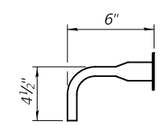

BAR SPLICER FOR #4 BAR - DETAIL III

Notes:

Cost of retainer assembly is included with Temporary Concrete Barrier.

A retainer assembly shall be located at the approximate ℄ of each temporary concrete barrier.

The retainer plate shall not be removed until the concrete on the adjacent stage is ready to be poured. For Detail III applications the retainer plate shall not be removed until just prior to placing the adjacent beam.

When the 'A' dimension is less than 1½", the wood block shall be omitted and the barrier shall be placed in direct contact with the steel retainer plate. For deck beam applications the minimum required 'A' distance is 6" to accommodate the shear key clamping device.

Detail I - Installation for a new bridge deck or bridge slab.

Detail II - Installation for a new deck beam with an initial concrete wearing surface. Additional bar splicers shall be provided at 6'-0" centers and paired with the bar splicers of the concrete wearing surface reinforcement to accommodate the installation of the retainer assemblies. The cost of the additional bar splicers is included with the concrete wearing surface.

Detail III - Installation for a new deck beam with no initial wearing surface or with an initial hot-mix asphalt (HMA) wearing surface present. The deck beam directly beneath the temporary concrete barrier shall be fabricated with bar splicer inserts in the side of the beam, as detailed, to accommodate the installation of the retainer assemblies. A pair of bar splicers, 6" apart, shall be placed at 6'-0" centers along the length of the beam. The cost of the bar splicers is included with the deck beam.

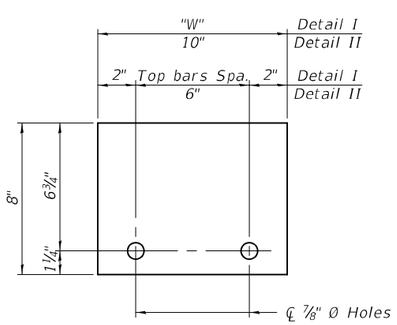

STEEL RETAINER PL 1" x 8" x "W"

(Detail I and II)

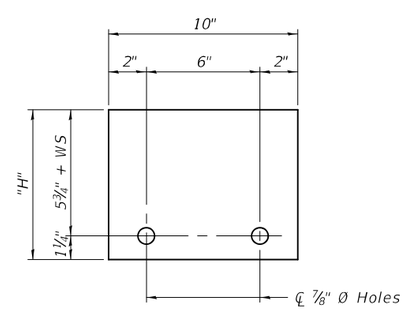

STEEL RETAINER PL 1" x "H" x 10"

(Detail III)

RAILING CRITERIA

NCHRP 350 Test Level	3
Railing Weight (plf)	440

R-27

10-12-2021

DESIGNED - RYAN P. NEGANGARD	EXAMINED	ENGINEER OF BRIDGE DESIGN	DATE - MAY 16, 2023	STATE OF ILLINOIS DEPARTMENT OF TRANSPORTATION	TEMPORARY CONCRETE BARRIER STRUCTURE NO. 010-0198 (NB) & 010-0199 (SB)
CHECKED - DAVID H. RICHTER	PASSED	ENGINEER OF BRIDGES AND STRUCTURES	REVISED -		SHEET 5 OF 42 SHEETS
DRAWN - DENNIS A. POP			REVISED -		
CHECKED - R.P.N. / D.H.R. / G.R.A.					

F.A.I. RTE.	SECTION	COUNTY	TOTAL SHEETS	SHEET NO.
57	(10-30)BR	CHAMPAIGN	107	44
		CONTRACT NO. 70A87		
		ILLINOIS	FED. AID PROJECT	

MODEL: 01001198-70A87-005
FILE NAME: pw:\\ildot-pw.bentley.com:PWIDOT\Documents\IDOT Offices\Bureau of Bridges and Structures\Projects\0100198\CADD Plans\0100198_70A87.dgn
5/17/2023 2:00:39 PM

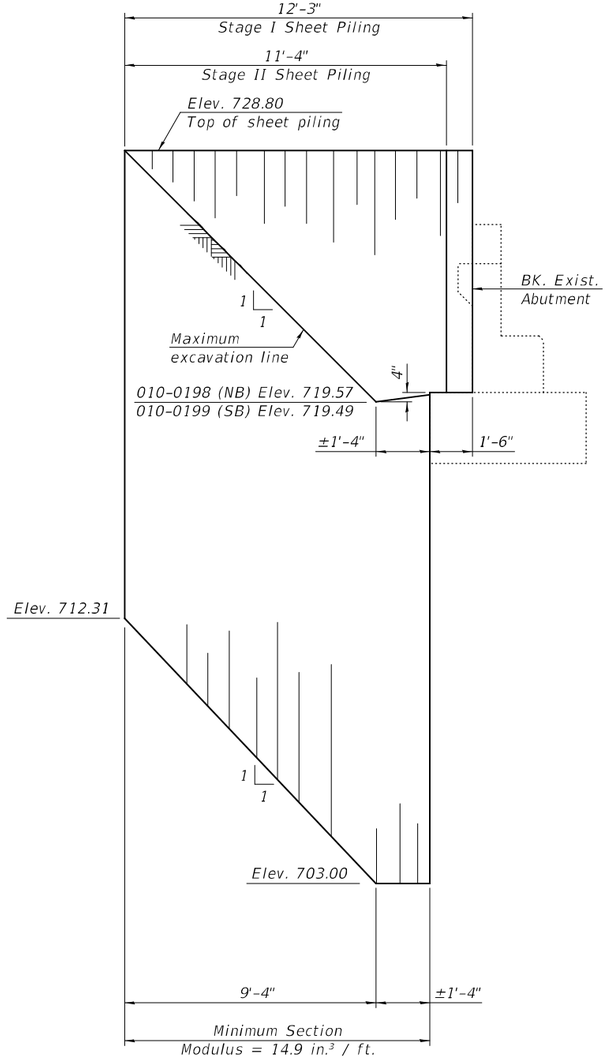

TEMPORARY SHEET PILING

(South Abutment - Looking West)

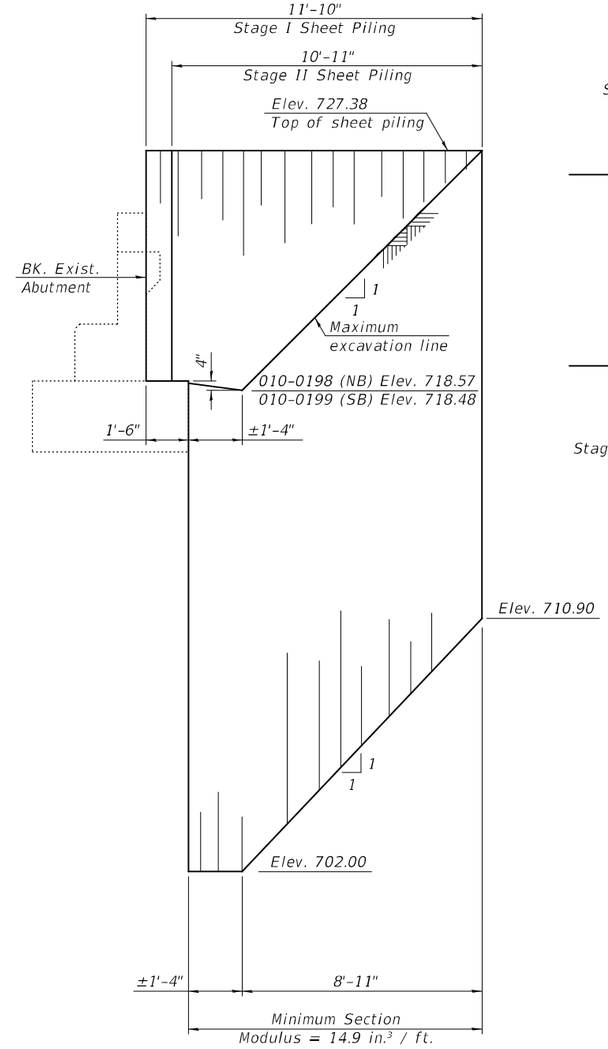

TEMPORARY SHEET PILING

(North Abutment - Looking West)

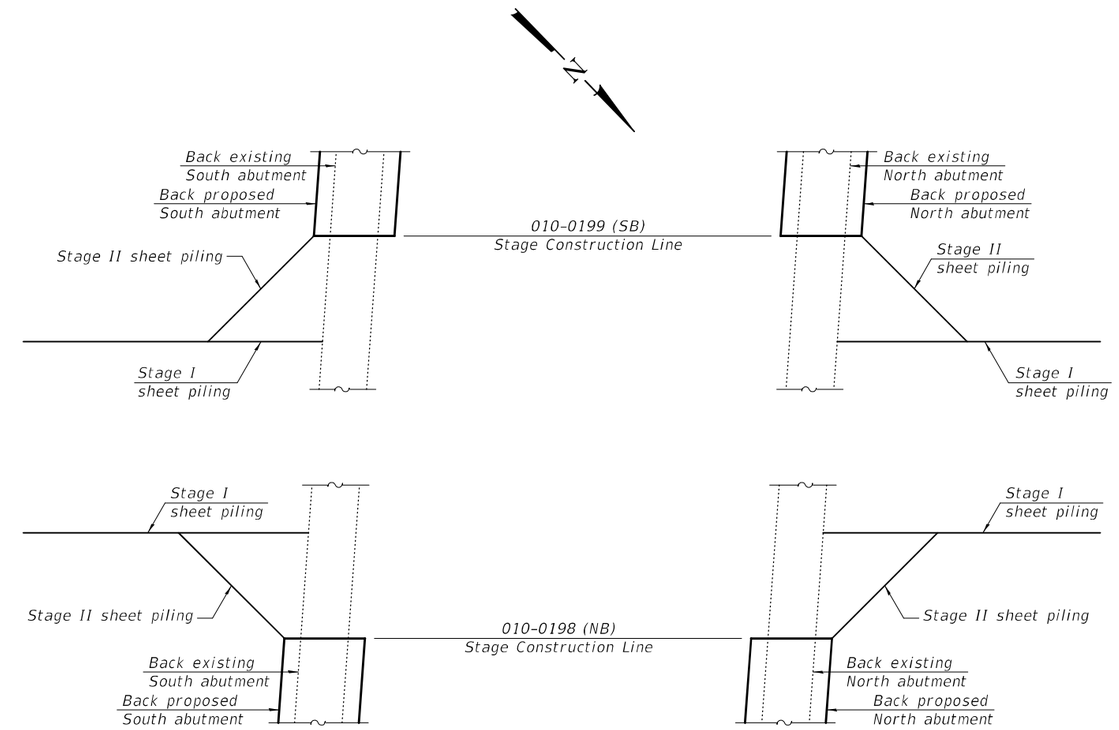

TEMPORARY SHEET PILING PLAN

Notes:

If the Contractor chooses to alter the temporary cantilevered sheet piling design requirements shown on the plans, a design submittal including plan details and calculations will be required for review and acceptance by the Engineer.

The Contractor shall connect the first sheet to the existing abutment wall to ensure stability of sheets driven to the top of the existing footing. This connection shall be reviewed and accepted by the Engineer and included in the cost for Temporary Sheet Piling.

MODEL: 0100198-70A87-006
FILE NAME: pw:\\ildot-pw.bentley.com:PWIDOT\Documents\IDOT Offices\Bureau of Bridges and Structures\Projects\0100198\CADD Plans\0100198_70A87.dgn
5/17/2023 2:00:40 PM

DESIGNED -	RYAN P. NEGANGARD	EXAMINED	ENGINEER OF BRIDGE DESIGN
CHECKED -	DAVID H. RICHTER		
DRAWN -	DENNIS A. POP	PASSED	ENGINEER OF BRIDGES AND STRUCTURES
CHECKED -	R.P.N. / D.H.R. / G.R.A.		

DATE - MAY 16, 2023
REVISED -
REVISED -

STATE OF ILLINOIS
DEPARTMENT OF TRANSPORTATION

TEMPORARY SHEET PILING
STRUCTURE NO. 010-0198 (NB) & 010-0199 (SB)

SHEET 6 OF 42 SHEETS

F.A.I. RTE.	SECTION	COUNTY	TOTAL SHEETS	SHEET NO.
57	(10-30)BR	CHAMPAIGN	107	45

CONTRACT NO. 70A87

ILLINOIS FED. AID PROJECT

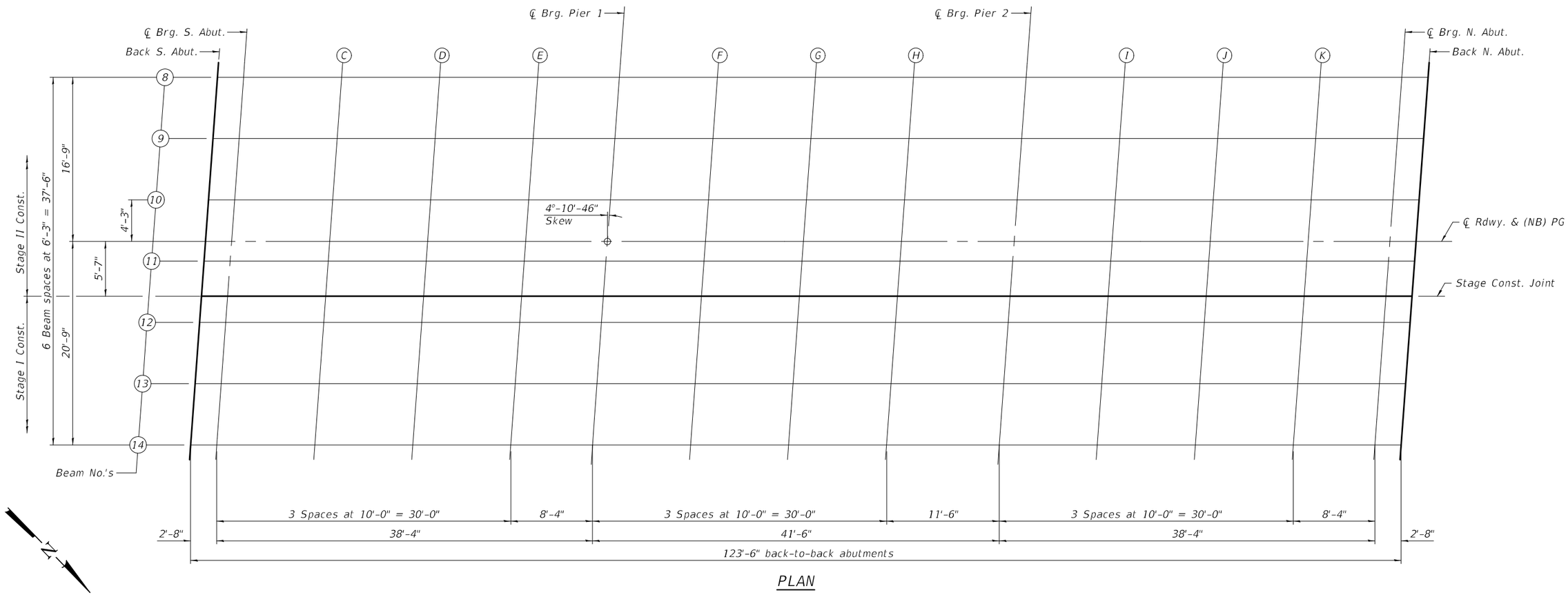

PLAN

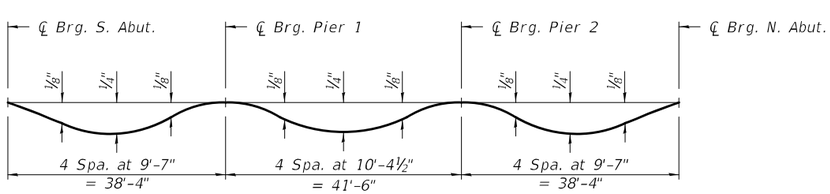

DEAD LOAD DEFLECTION DIAGRAM

(Includes weight of concrete only.)

Note:
The above deflections are not to be used in the field if the Engineer is working from the grade elevations adjusted for dead load deflections and grinding as shown on sheets 8 and 9 of 42.

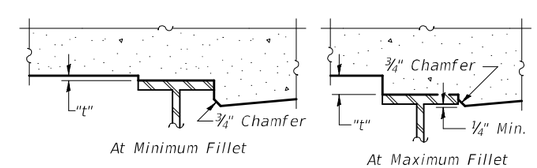

To determine "t": After all structural steel has been erected, elevations of the top flanges of the beams shall be taken at intervals shown on sheets 8 and 9 of 42. These elevations subtracted from the "Theoretical Grade Elevations Adjusted for Dead Load Deflection and Grinding" shown on sheets 8 and 9 of 42, minus the initial slab thickness prior to grinding, equals the fillet heights "t" above top flange of beams.

The slab is to be ground after curing to achieve smoothness, but the slab is not to be ground to elevations below the "Theoretical Grade Elevations" shown on sheets 8 and 9 of 42. For grinding the deck, see Special Provisions.

FILLET HEIGHTS

MODEL: 0100198-70A87-007
FILE NAME: pw:\\ildot-pw.bentley.com:PWIDOT\Documents\IDOT Offices\Bureau of Bridges and Structures\Projects\0100198\CADD Plans\0100198_70A87.dgn

DESIGNED - RYAN P. NEGANGARD	EXAMINED	ENGINEER OF BRIDGE DESIGN	DATE - MAY 16, 2023	STATE OF ILLINOIS DEPARTMENT OF TRANSPORTATION	TOP OF SLAB ELEVATIONS STRUCTURE NO. 010-0198 (NB)
CHECKED - DAVID H. RICHTER					
DRAWN - DENNIS A. POP	PASSED	ENGINEER OF BRIDGES AND STRUCTURES	REVISED -		
CHECKED - R.P.N. / D.H.R. / G.R.A.			REVISED -		SHEET 7 OF 42 SHEETS

F.A.I. RTE.	SECTION	COUNTY	TOTAL SHEETS	SHEET NO.
57	(10-30)BR	CHAMPAIGN	107	46
		CONTRACT NO. 70A87		
		ILLINOIS FED. AID PROJECT		

5/17/2023 2:00:41 PM

BEAM 8

Location	Station	Offset	Theoretical Grade Elevations	Theoretical Grade Elevations Adjusted For Dead Load Deflection and Grinding
Back S. Abut.	117+86.24	-16.75	728.52	728.54
℄ Brg. S. Abut.	117+88.91	-16.75	728.49	728.51
C	117+98.91	-16.75	728.39	728.42
D	118+08.91	-16.75	728.28	728.32
E	118+18.91	-16.75	728.17	728.20
℄ Brg. Pier 1	118+27.24	-16.75	728.08	728.10
F	118+37.24	-16.75	727.97	727.99
G	118+47.24	-16.75	727.86	727.88
H	118+57.24	-16.75	727.74	727.76
℄ Brg. Pier 2	118+68.74	-16.75	727.60	727.62
I	118+78.74	-16.75	727.48	727.51
J	118+88.74	-16.75	727.36	727.39
K	118+98.74	-16.75	727.23	727.26
℄ Brg. N. Abut.	119+07.08	-16.75	727.12	727.14
Back N. Abut.	119+09.74	-16.75	727.09	727.11

BEAM 9

Location	Station	Offset	Theoretical Grade Elevations	Theoretical Grade Elevations Adjusted For Dead Load Deflection and Grinding
Back S. Abut.	117+85.79	-10.50	728.64	728.66
℄ Brg. S. Abut.	117+88.45	-10.50	728.61	728.63
C	117+98.45	-10.50	728.51	728.54
D	118+08.45	-10.50	728.40	728.44
E	118+18.45	-10.50	728.30	728.32
℄ Brg. Pier 1	118+26.79	-10.50	728.20	728.22
F	118+36.79	-10.50	728.09	728.12
G	118+46.79	-10.50	727.98	728.00
H	118+56.79	-10.50	727.86	727.89
℄ Brg. Pier 2	118+68.29	-10.50	727.73	727.75
I	118+78.29	-10.50	727.60	727.63
J	118+88.29	-10.50	727.48	727.52
K	118+98.29	-10.50	727.35	727.38
℄ Brg. N. Abut.	119+06.62	-10.50	727.25	727.27
Back N. Abut.	119+09.29	-10.50	727.21	727.23

BEAM 10

Location	Station	Offset	Theoretical Grade Elevations	Theoretical Grade Elevations Adjusted For Dead Load Deflection and Grinding
Back S. Abut.	117+85.33	-4.25	728.74	728.76
℄ Brg. S. Abut.	117+88.00	-4.25	728.71	728.73
C	117+98.00	-4.25	728.61	728.64
D	118+08.00	-4.25	728.50	728.54
E	118+18.00	-4.25	728.39	728.42
℄ Brg. Pier 1	118+26.33	-4.25	728.30	728.32
F	118+36.33	-4.25	728.19	728.21
G	118+46.33	-4.25	728.08	728.10
H	118+56.33	-4.25	727.96	727.98
℄ Brg. Pier 2	118+67.83	-4.25	727.82	727.84
I	118+77.83	-4.25	727.70	727.73
J	118+87.83	-4.25	727.58	727.62
K	118+97.83	-4.25	727.45	727.48
℄ Brg. N. Abut.	119+06.16	-4.25	727.35	727.37
Back N. Abut.	119+08.83	-4.25	727.31	727.33

℄ Roadway & (NB) PG

Location	Station	Offset	Theoretical Grade Elevations	Theoretical Grade Elevations Adjusted For Dead Load Deflection and Grinding
Back S. Abut.	117+85.02	0.00	728.80	728.82
℄ Brg. S. Abut.	117+87.69	0.00	728.78	728.80
C	117+97.69	0.00	728.67	728.71
D	118+07.69	0.00	728.57	728.61
E	118+17.69	0.00	728.46	728.49
℄ Brg. Pier 1	118+26.02	0.00	728.37	728.39
F	118+36.02	0.00	728.26	728.28
G	118+46.02	0.00	728.15	728.17
H	118+56.02	0.00	728.03	728.05
℄ Brg. Pier 2	118+67.52	0.00	727.89	727.91
I	118+77.52	0.00	727.77	727.80
J	118+87.52	0.00	727.65	727.68
K	118+97.52	0.00	727.52	727.55
℄ Brg. N. Abut.	119+05.85	0.00	727.41	727.43
Back N. Abut.	119+08.52	0.00	727.38	727.40

BEAM 11

Location	Station	Offset	Theoretical Grade Elevations	Theoretical Grade Elevations Adjusted For Dead Load Deflection and Grinding
Back S. Abut.	117+84.87	2.00	728.77	728.79
℄ Brg. S. Abut.	117+87.54	2.00	728.75	728.77
C	117+97.54	2.00	728.65	728.68
D	118+07.54	2.00	728.54	728.58
E	118+17.54	2.00	728.43	728.46
℄ Brg. Pier 1	118+25.87	2.00	728.34	728.36
F	118+35.87	2.00	728.23	728.25
G	118+45.87	2.00	728.12	728.14
H	118+55.87	2.00	728.00	728.02
℄ Brg. Pier 2	118+67.37	2.00	727.86	727.88
I	118+77.37	2.00	727.74	727.77
J	118+87.37	2.00	727.62	727.65
K	118+97.37	2.00	727.49	727.52
℄ Brg. N. Abut.	119+05.71	2.00	727.39	727.41
Back N. Abut.	119+08.37	2.00	727.35	727.37

STAGE CONSTRUCTION JOINT

Location	Station	Offset	Theoretical Grade Elevations	Theoretical Grade Elevations Adjusted For Dead Load Deflection and Grinding
Back S. Abut.	117+84.61	5.58	728.72	728.74
℄ Brg. S. Abut.	117+87.28	5.58	728.70	728.72
C	117+97.28	5.58	728.59	728.63
D	118+07.28	5.58	728.49	728.53
E	118+17.28	5.58	728.38	728.41
℄ Brg. Pier 1	118+25.61	5.58	728.29	728.31
F	118+35.61	5.58	728.18	728.20
G	118+45.61	5.58	728.07	728.09
H	118+55.61	5.58	727.95	727.97
℄ Brg. Pier 2	118+67.11	5.58	727.81	727.83
I	118+77.11	5.58	727.69	727.72
J	118+87.11	5.58	727.57	727.60
K	118+97.11	5.58	727.44	727.47
℄ Brg. N. Abut.	119+05.45	5.58	727.33	727.35
Back N. Abut.	119+08.11	5.58	727.30	727.32

BEAM 12

Location	Station	Offset	Theoretical Grade Elevations	Theoretical Grade Elevations Adjusted For Dead Load Deflection and Grinding
Back S. Abut.	117+84.42	8.25	728.69	728.71
℄ Brg. S. Abut.	117+87.08	8.25	728.66	728.68
C	117+97.08	8.25	728.56	728.59
D	118+07.08	8.25	728.45	728.49
E	118+17.08	8.25	728.34	728.37
℄ Brg. Pier 1	118+25.42	8.25	728.25	728.27
F	118+35.42	8.25	728.14	728.16
G	118+45.42	8.25	728.03	728.05
H	118+55.42	8.25	727.91	727.93
℄ Brg. Pier 2	118+66.92	8.25	727.78	727.80
I	118+76.92	8.25	727.65	727.68
J	118+86.92	8.25	727.53	727.57
K	118+96.92	8.25	727.40	727.44
℄ Brg. N. Abut.	119+05.25	8.25	727.30	727.32
Back N. Abut.	119+07.92	8.25	727.26	727.28

BEAM 13

Location	Station	Offset	Theoretical Grade Elevations	Theoretical Grade Elevations Adjusted For Dead Load Deflection and Grinding
Back S. Abut.	117+83.96	14.50	728.58	728.60
℄ Brg. S. Abut.	117+86.63	14.50	728.56	728.58
C	117+96.63	14.50	728.45	728.49
D	118+06.63	14.50	728.35	728.39
E	118+16.63	14.50	728.24	728.27
℄ Brg. Pier 1	118+24.96	14.50	728.15	728.17
F	118+34.96	14.50	728.04	728.06
G	118+44.96	14.50	727.93	727.95
H	118+54.96	14.50	727.81	727.83
℄ Brg. Pier 2	118+66.46	14.50	727.67	727.69
I	118+76.46	14.50	727.55	727.58
J	118+86.46	14.50	727.43	727.47
K	118+96.46	14.50	727.30	727.34
℄ Brg. N. Abut.	119+04.79	14.50	727.20	727.22
Back N. Abut.	119+07.46	14.50	727.16	727.18

BEAM 14

Location	Station	Offset	Theoretical Grade Elevations	Theoretical Grade Elevations Adjusted For Dead Load Deflection and Grinding
Back S. Abut.	117+83.50	20.75	728.46	728.48
℄ Brg. S. Abut.	117+86.17	20.75	728.44	728.46
C	117+96.17	20.75	728.33	728.37
D	118+06.17	20.75	728.23	728.27
E	118+16.17	20.75	728.12	728.15
℄ Brg. Pier 1	118+24.50	20.75	728.03	728.05
F	118+34.50	20.75	727.92	727.94
G	118+44.50	20.75	727.81	727.83
H	118+54.50	20.75	727.69	727.71
℄ Brg. Pier 2	118+66.00	20.75	727.56	727.58
I	118+76.00	20.75	727.43	727.46
J	118+86.00	20.75	727.31	727.35
K	118+96.00	20.75	727.18	727.22
℄ Brg. N. Abut.	119+04.34	20.75	727.08	727.10
Back N. Abut.	119+07.00	20.75	727.04	727.06

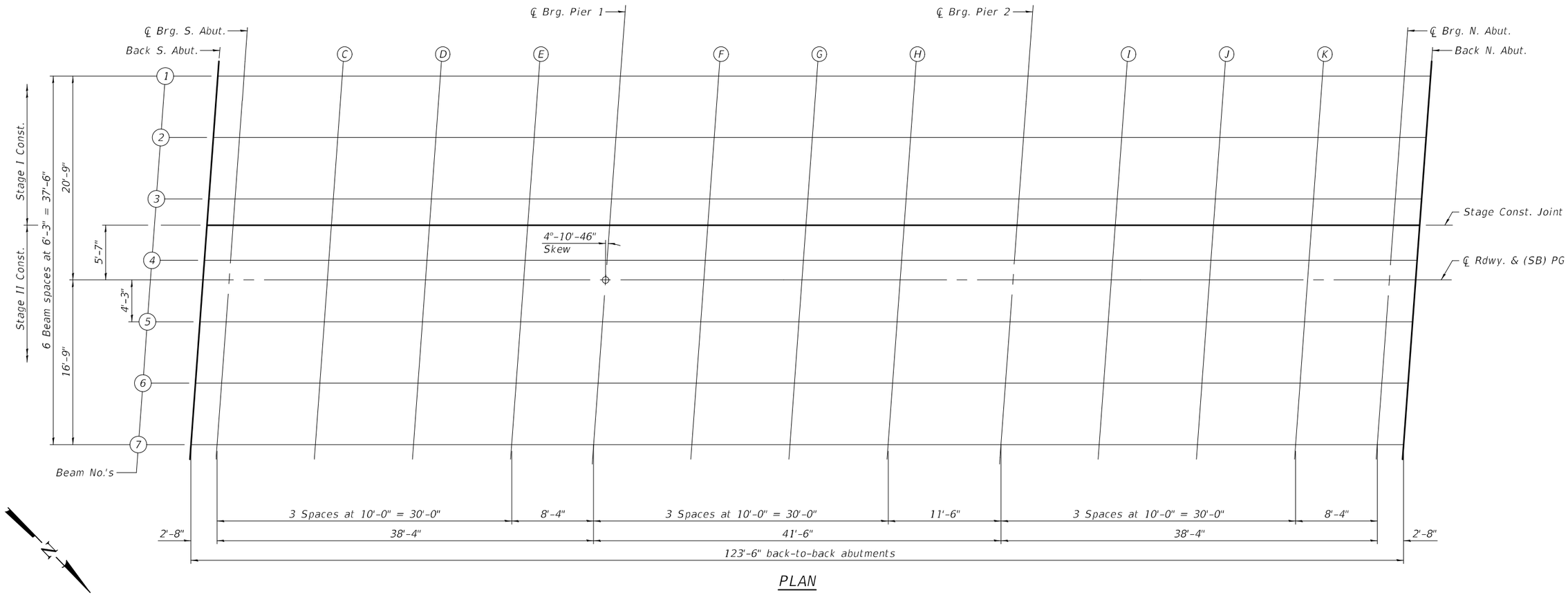

PLAN

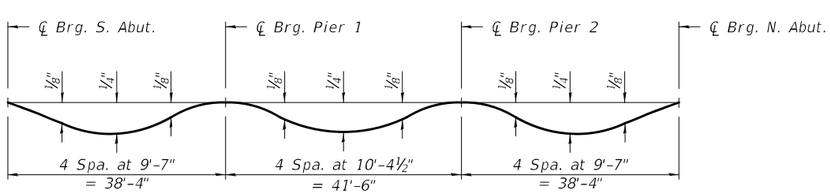

DEAD LOAD DEFLECTION DIAGRAM

(Includes weight of concrete only.)

Note:
The above deflections are not to be used in the field if the Engineer is working from the grade elevations adjusted for dead load deflections and grinding as shown on sheets 11 and 12 of 42.

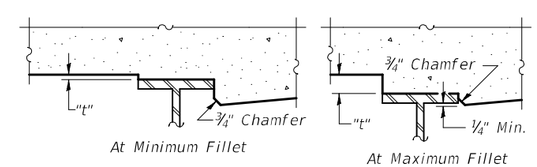

To determine "t": After all structural steel has been erected, elevations of the top flanges of the beams shall be taken at intervals shown on sheets 11 and 12 of 42. These elevations subtracted from the "Theoretical Grade Elevations Adjusted for Dead Load Deflection and Grinding" shown on sheets 11 and 12 of 42, minus the initial slab thickness prior to grinding, equals the fillet heights "t" above top flange of beams.

The slab is to be ground after curing to achieve smoothness, but the slab is not to be ground to elevations below the "Theoretical Grade Elevations" shown on sheets 11 and 12 of 42. For grinding the deck, see Special Provisions.

FILLET HEIGHTS

MODEL: 0100198-70A87-010
FILE NAME: pw:\\ildot-pw.bentley.com:PWIDOT\Documents\IDOT Offices\Bureau of Bridges and Structures\Projects\0100198\CADD Plans\0100198_70A87.dgn
5/17/2023 2:00:45 PM

DESIGNED - RYAN P. NEGANGARD	EXAMINED	DATE - MAY 16, 2023	STATE OF ILLINOIS DEPARTMENT OF TRANSPORTATION
CHECKED - DAVID H. RICHTER	ENGINEER OF BRIDGE DESIGN		
DRAWN - DENNIS A. POP	PASSED	REVISED -	
CHECKED - R.P.N. / D.H.R. / G.R.A.	ENGINEER OF BRIDGES AND STRUCTURES	REVISED -	

TOP OF SLAB ELEVATIONS
STRUCTURE NO. 010-0199 (SB)

SHEET 10 OF 42 SHEETS

F.A.I. RTE.	SECTION	COUNTY	TOTAL SHEETS	SHEET NO.
57	(10-30)BR	CHAMPAIGN	107	49

CONTRACT NO. 70A87

ILLINOIS | FED. AID PROJECT

BEAM 1

Location	Station	Offset	Theoretical Grade Elevations	Theoretical Grade Elevations Adjusted For Dead Load Deflection and Grinding
Back S. Abut.	117+92.98	-20.75	728.37	728.39
℄ Brg. S. Abut.	117+95.64	-20.75	728.34	728.36
C	118+05.64	-20.75	728.24	728.27
D	118+15.64	-20.75	728.13	728.16
E	118+25.64	-20.75	728.02	728.05
℄ Brg. Pier 1	118+33.98	-20.75	727.93	727.95
F	118+43.98	-20.75	727.81	727.84
G	118+53.98	-20.75	727.70	727.72
H	118+63.98	-20.75	727.58	727.60
℄ Brg. Pier 2	118+75.48	-20.75	727.44	727.46
I	118+85.48	-20.75	727.32	727.35
J	118+95.48	-20.75	727.19	727.23
K	119+05.48	-20.75	727.06	727.09
℄ Brg. N. Abut.	119+13.81	-20.75	726.95	726.97
Back N. Abut.	119+16.48	-20.75	726.92	726.94

BEAM 2

Location	Station	Offset	Theoretical Grade Elevations	Theoretical Grade Elevations Adjusted For Dead Load Deflection and Grinding
Back S. Abut.	117+92.52	-14.50	728.50	728.52
℄ Brg. S. Abut.	117+95.19	-14.50	728.47	728.49
C	118+05.19	-14.50	728.37	728.40
D	118+15.19	-14.50	728.26	728.29
E	118+25.19	-14.50	728.15	728.18
℄ Brg. Pier 1	118+33.52	-14.50	728.06	728.08
F	118+43.52	-14.50	727.94	727.97
G	118+53.52	-14.50	727.83	727.85
H	118+63.52	-14.50	727.71	727.73
℄ Brg. Pier 2	118+75.02	-14.50	727.57	727.59
I	118+85.02	-14.50	727.45	727.48
J	118+95.02	-14.50	727.32	727.36
K	119+05.02	-14.50	727.19	727.23
℄ Brg. N. Abut.	119+13.35	-14.50	727.09	727.11
Back N. Abut.	119+16.02	-14.50	727.05	727.07

BEAM 3

Location	Station	Offset	Theoretical Grade Elevations	Theoretical Grade Elevations Adjusted For Dead Load Deflection and Grinding
Back S. Abut.	117+92.06	-8.25	728.61	728.63
℄ Brg. S. Abut.	117+94.73	-8.25	728.58	728.60
C	118+04.73	-8.25	728.48	728.51
D	118+14.73	-8.25	728.37	728.41
E	118+24.73	-8.25	728.26	728.29
℄ Brg. Pier 1	118+33.06	-8.25	728.17	728.19
F	118+43.06	-8.25	728.06	728.08
G	118+53.06	-8.25	727.94	727.97
H	118+63.06	-8.25	727.82	727.84
℄ Brg. Pier 2	118+74.56	-8.25	727.68	727.70
I	118+84.56	-8.25	727.56	727.59
J	118+94.56	-8.25	727.43	727.47
K	119+04.56	-8.25	727.31	727.34
℄ Brg. N. Abut.	119+12.90	-8.25	727.20	727.22
Back N. Abut.	119+15.56	-8.25	727.16	727.18

STAGE CONSTRUCTION JOINT

Location	Station	Offset	Theoretical Grade Elevations	Theoretical Grade Elevations Adjusted For Dead Load Deflection and Grinding
Back S. Abut.	117+91.87	-5.58	728.65	728.67
℄ Brg. S. Abut.	117+94.53	-5.58	728.62	728.64
C	118+04.53	-5.58	728.52	728.55
D	118+14.53	-5.58	728.41	728.45
E	118+24.53	-5.58	728.30	728.33
℄ Brg. Pier 1	118+32.87	-5.58	728.21	728.23
F	118+42.87	-5.58	728.10	728.12
G	118+52.87	-5.58	727.98	728.01
H	118+62.87	-5.58	727.86	727.89
℄ Brg. Pier 2	118+74.37	-5.58	727.73	727.75
I	118+84.37	-5.58	727.60	727.63
J	118+94.37	-5.58	727.48	727.51
K	119+04.37	-5.58	727.35	727.38
℄ Brg. N. Abut.	119+12.70	-5.58	727.24	727.26
Back N. Abut.	119+15.37	-5.58	727.21	727.23

BEAM 4

Location	Station	Offset	Theoretical Grade Elevations	Theoretical Grade Elevations Adjusted For Dead Load Deflection and Grinding
Back S. Abut.	117+91.61	-2.00	728.71	728.73
℄ Brg. S. Abut.	117+94.27	-2.00	728.68	728.70
C	118+04.27	-2.00	728.58	728.61
D	118+14.27	-2.00	728.47	728.50
E	118+24.27	-2.00	728.36	728.39
℄ Brg. Pier 1	118+32.61	-2.00	728.27	728.29
F	118+42.61	-2.00	728.15	728.18
G	118+52.61	-2.00	728.04	728.06
H	118+62.61	-2.00	727.92	727.94
℄ Brg. Pier 2	118+74.11	-2.00	727.78	727.80
I	118+84.11	-2.00	727.66	727.69
J	118+94.11	-2.00	727.53	727.57
K	119+04.11	-2.00	727.41	727.44
℄ Brg. N. Abut.	119+12.44	-2.00	727.30	727.32
Back N. Abut.	119+15.11	-2.00	727.26	727.28

℄ Roadway & (SB) PG

Location	Station	Offset	Theoretical Grade Elevations	Theoretical Grade Elevations Adjusted For Dead Load Deflection and Grinding
Back S. Abut.	117+91.46	0.00	728.74	728.76
℄ Brg. S. Abut.	117+94.13	0.00	728.71	728.73
C	118+04.13	0.00	728.61	728.64
D	118+14.13	0.00	728.50	728.54
E	118+24.13	0.00	728.39	728.42
℄ Brg. Pier 1	118+32.46	0.00	728.30	728.32
F	118+42.46	0.00	728.19	728.21
G	118+52.46	0.00	728.07	728.10
H	118+62.46	0.00	727.95	727.98
℄ Brg. Pier 2	118+73.96	0.00	727.81	727.83
I	118+83.96	0.00	727.69	727.72
J	118+93.96	0.00	727.57	727.60
K	119+03.96	0.00	727.44	727.47
℄ Brg. N. Abut.	119+12.29	0.00	727.33	727.35
Back N. Abut.	119+14.96	0.00	727.29	727.31

BEAM 5

Location	Station	Offset	Theoretical Grade Elevations	Theoretical Grade Elevations Adjusted For Dead Load Deflection and Grinding
Back S. Abut.	117+91.15	4.25	728.68	728.70
℄ Brg. S. Abut.	117+93.82	4.25	728.65	728.67
C	118+03.82	4.25	728.55	728.58
D	118+13.82	4.25	728.44	728.48
E	118+23.82	4.25	728.33	728.36
℄ Brg. Pier 1	118+32.15	4.25	728.24	728.26
F	118+42.15	4.25	728.13	728.15
G	118+52.15	4.25	728.01	728.04
H	118+62.15	4.25	727.89	727.92
℄ Brg. Pier 2	118+73.65	4.25	727.75	727.77
I	118+83.65	4.25	727.63	727.66
J	118+93.65	4.25	727.51	727.54
K	119+03.65	4.25	727.38	727.41
℄ Brg. N. Abut.	119+11.98	4.25	727.27	727.29
Back N. Abut.	119+14.65	4.25	727.23	727.25

BEAM 6

Location	Station	Offset	Theoretical Grade Elevations	Theoretical Grade Elevations Adjusted For Dead Load Deflection and Grinding
Back S. Abut.	117+90.69	10.50	728.59	728.61
℄ Brg. S. Abut.	117+93.36	10.50	728.56	728.58
C	118+03.36	10.50	728.46	728.49
D	118+13.36	10.50	728.35	728.39
E	118+23.36	10.50	728.24	728.27
℄ Brg. Pier 1	118+31.69	10.50	728.15	728.17
F	118+41.69	10.50	728.04	728.06
G	118+51.69	10.50	727.92	727.95
H	118+61.69	10.50	727.80	727.83
℄ Brg. Pier 2	118+73.19	10.50	727.67	727.69
I	118+83.19	10.50	727.54	727.57
J	118+93.19	10.50	727.42	727.45
K	119+03.19	10.50	727.29	727.32
℄ Brg. N. Abut.	119+11.53	10.50	727.18	727.20
Back N. Abut.	119+14.19	10.50	727.15	727.17

BEAM 7

Location	Station	Offset	Theoretical Grade Elevations	Theoretical Grade Elevations Adjusted For Dead Load Deflection and Grinding
Back S. Abut.	117+90.24	16.75	728.48	728.50
℄ Brg. S. Abut.	117+92.90	16.75	728.45	728.47
C	118+02.90	16.75	728.34	728.38
D	118+12.90	16.75	728.24	728.27
E	118+22.90	16.75	728.13	728.16
℄ Brg. Pier 1	118+31.24	16.75	728.04	728.06
F	118+41.24	16.75	727.92	727.95
G	118+51.24	16.75	727.81	727.84
H	118+61.24	16.75	727.69	727.71
℄ Brg. Pier 2	118+72.74	16.75	727.55	727.57
I	118+82.74	16.75	727.43	727.46
J	118+92.74	16.75	727.31	727.34
K	119+02.74	16.75	727.18	727.21
℄ Brg. N. Abut.	119+11.07	16.75	727.07	727.09
Back N. Abut.	119+13.74	16.75	727.04	727.06

WEST EDGE OF SHOULDER

Location	Station	Offset	Theoretical Grade Elevations	Theoretical Grade Elevations Adjusted For Grinding
S. End of S. Appr. Slab	117+57.34	-18.00	728.77	728.79
A	117+67.34	-18.00	728.68	728.70
B	117+77.34	-18.00	728.58	728.60
N. End of S. Appr. Slab	117+87.34	-18.00	728.48	728.50

WEST EDGE OF ROADWAY

Location	Station	Offset	Theoretical Grade Elevations	Theoretical Grade Elevations Adjusted For Grinding
S. End of S. Appr. Slab	117+56.90	-12.00	728.90	728.92
A	117+66.90	-12.00	728.80	728.82
B	117+76.90	-12.00	728.70	728.72
N. End of S. Appr. Slab	117+86.90	-12.00	728.60	728.62

℄ ROADWAY & (NB) PG

Location	Station	Offset	Theoretical Grade Elevations	Theoretical Grade Elevations Adjusted For Grinding
S. End of S. Appr. Slab	117+56.02	0.00	729.09	729.11
A	117+66.02	0.00	728.99	729.01
B	117+76.02	0.00	728.89	728.91
N. End of S. Appr. Slab	117+86.02	0.00	728.79	728.81

STAGE CONSTRUCTION JOINT

Location	Station	Offset	Theoretical Grade Elevations	Theoretical Grade Elevations Adjusted For Grinding
S. End of S. Appr. Slab	117+55.62	5.58	729.01	729.03
A	117+65.62	5.58	728.91	728.93
B	117+75.62	5.58	728.81	728.83
N. End of S. Appr. Slab	117+85.62	5.58	728.71	728.73

EAST EDGE OF ROADWAY

Location	Station	Offset	Theoretical Grade Elevations	Theoretical Grade Elevations Adjusted For Grinding
S. End of S. Appr. Slab	117+55.15	12.00	728.91	728.93
A	117+65.15	12.00	728.82	728.84
B	117+75.15	12.00	728.72	728.74
N. End of S. Appr. Slab	117+85.15	12.00	728.62	728.64

EAST EDGE OF SHOULDER

Location	Station	Offset	Theoretical Grade Elevations	Theoretical Grade Elevations Adjusted For Grinding
S. End of S. Appr. Slab	117+54.42	22.00	728.72	728.74
A	117+64.42	22.00	728.63	728.65
B	117+74.42	22.00	728.53	728.55
N. End of S. Appr. Slab	117+84.42	22.00	728.43	728.45

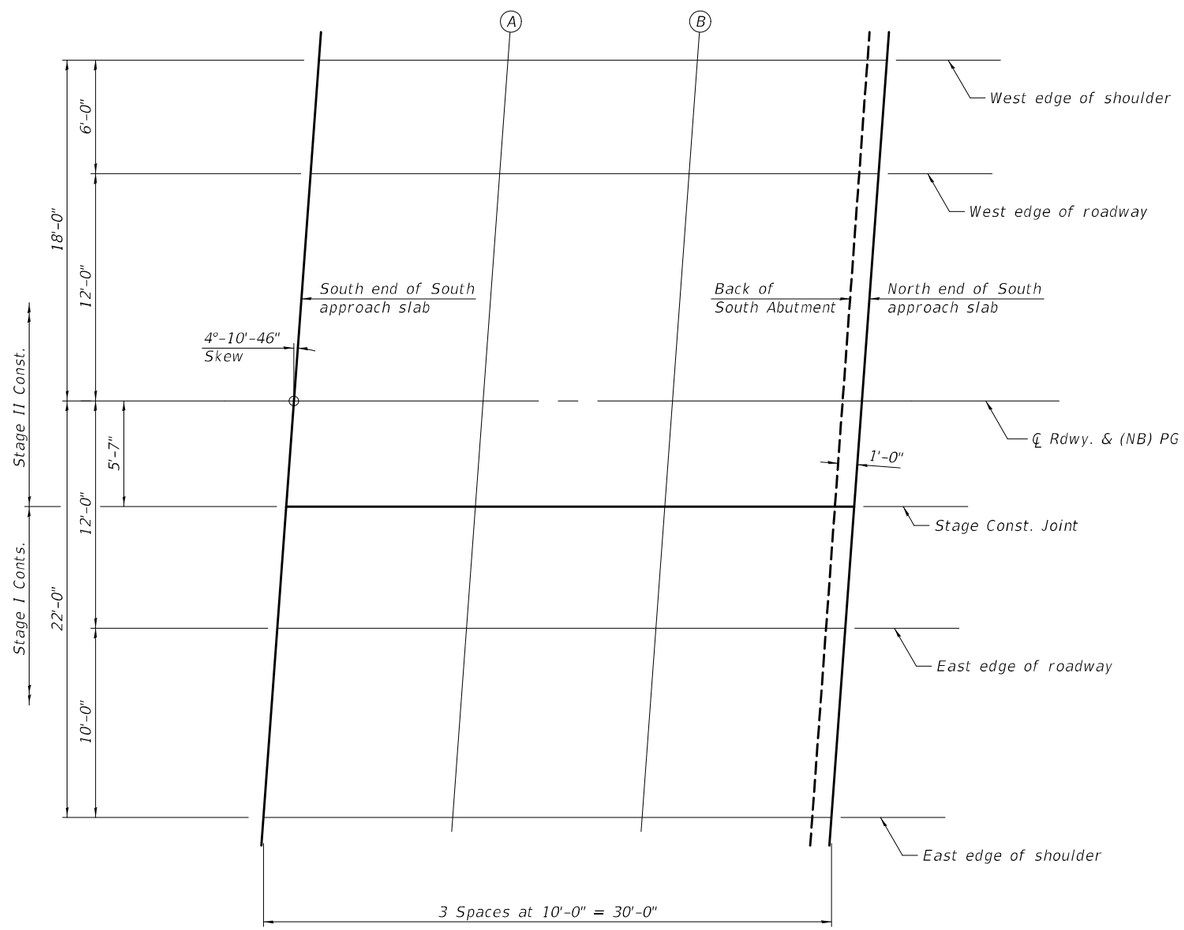

PLAN

MODEL: 0100198-70A87-013
FILE NAME: pw:\\ildo-pw.bentley.com:PWIDOT\Documents\IDOT Offices\Bureau of Bridges and Structures\Projects\0100198\CADD Plans\0100198_70A87.dgn
5/17/2023 2:00:48 PM

DESIGNED -	RYAN P. NEGANGARD	EXAMINED	ENGINEER OF BRIDGE DESIGN
CHECKED -	DAVID H. RICHTER	PASSED	ENGINEER OF BRIDGES AND STRUCTURES
DRAWN -	DENNIS A. POP	DATE -	MAY 16, 2023
CHECKED -	R.P.N. / D.H.R. / G.R.A.	REVISED -	
		REVISED -	

STATE OF ILLINOIS
DEPARTMENT OF TRANSPORTATION

TOP OF SOUTH APPROACH SLAB ELEVATIONS
STRUCTURE NO. 010-0198 (NB)

SHEET 13 OF 42 SHEETS

F.A.I. RTE.	SECTION	COUNTY	TOTAL SHEETS	SHEET NO.
57	(10-30)BR	CHAMPAIGN	107	52

CONTRACT NO. 70A87

ILLINOIS | FED. AID PROJECT

WEST EDGE OF SHOULDER

Location	Station	Offset	Theoretical Grade Elevations	Theoretical Grade Elevations Adjusted For Grinding
S. End of N. Appr. Slab	119+08.83	-18.00	727.07	727.09
L	119+18.83	-18.00	726.94	726.96
M	119+28.83	-18.00	726.81	726.83
N. End of N. Appr. Slab	119+38.83	-18.00	726.67	726.69

WEST EDGE OF ROADWAY

Location	Station	Offset	Theoretical Grade Elevations	Theoretical Grade Elevations Adjusted For Grinding
S. End of N. Appr. Slab	119+08.39	-12.00	727.20	727.22
L	119+18.39	-12.00	727.07	727.09
M	119+28.39	-12.00	726.94	726.96
N. End of N. Appr. Slab	119+38.39	-12.00	726.80	726.82

℄ ROADWAY & (NB) PG

Location	Station	Offset	Theoretical Grade Elevations	Theoretical Grade Elevations Adjusted For Grinding
S. End of N. Appr. Slab	119+07.52	0.00	727.39	727.41
L	119+17.52	0.00	727.26	727.28
M	119+27.52	0.00	727.13	727.15
N. End of N. Appr. Slab	119+37.52	0.00	726.99	727.01

STAGE CONSTRUCTION JOINT

Location	Station	Offset	Theoretical Grade Elevations	Theoretical Grade Elevations Adjusted For Grinding
S. End of N. Appr. Slab	119+07.11	5.58	727.31	727.33
L	119+17.11	5.58	727.18	727.20
M	119+27.11	5.58	727.05	727.07
N. End of N. Appr. Slab	119+37.11	5.58	726.91	726.93

EAST EDGE OF ROADWAY

Location	Station	Offset	Theoretical Grade Elevations	Theoretical Grade Elevations Adjusted For Grinding
S. End of N. Appr. Slab	119+06.64	12.00	727.22	727.24
L	119+16.64	12.00	727.09	727.11
M	119+26.64	12.00	726.96	726.98
N. End of N. Appr. Slab	119+36.64	12.00	726.82	726.84

EAST EDGE OF SHOULDER

Location	Station	Offset	Theoretical Grade Elevations	Theoretical Grade Elevations Adjusted For Grinding
S. End of N. Appr. Slab	119+05.91	22.00	727.03	727.05
L	119+15.91	22.00	726.90	726.92
M	119+25.91	22.00	726.77	726.79
N. End of N. Appr. Slab	119+35.91	22.00	726.63	726.65

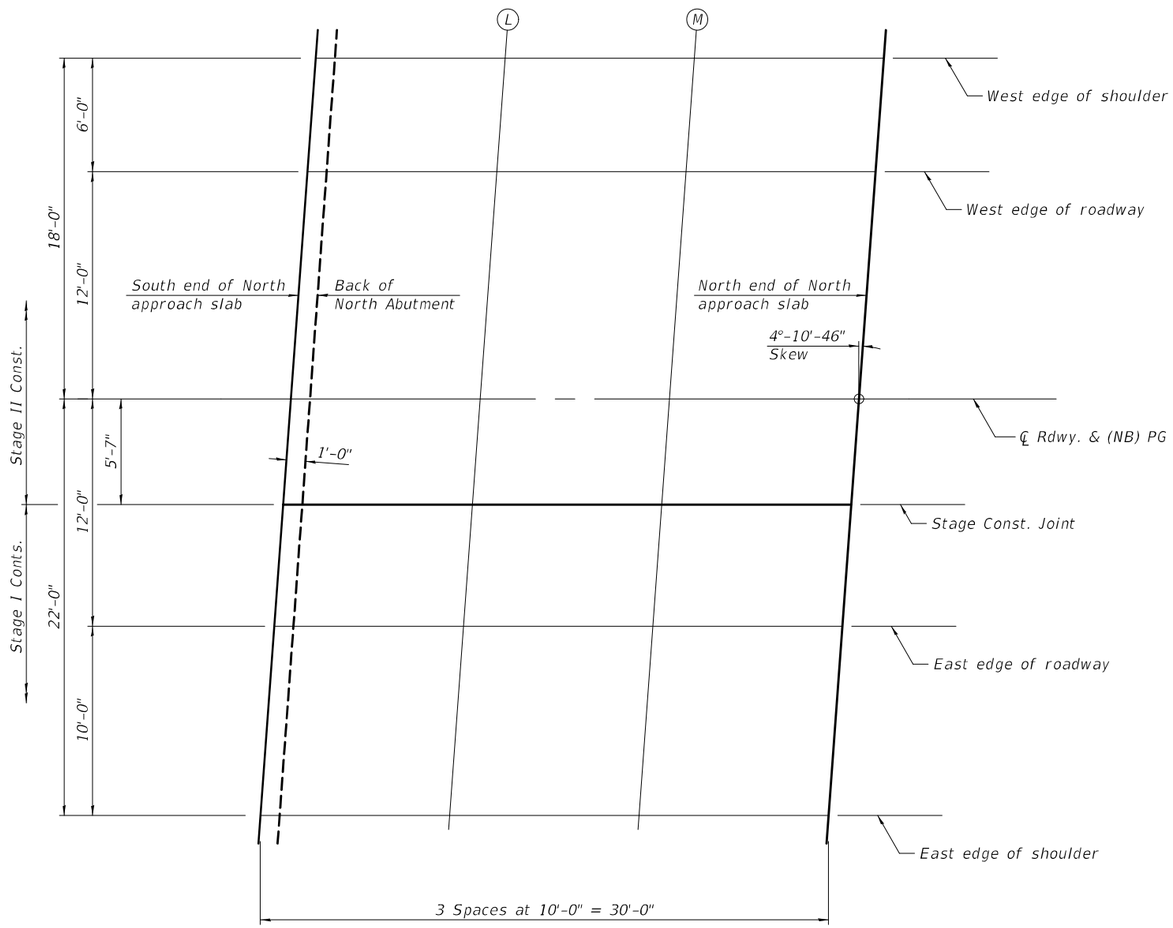

PLAN

MODEL: 0100198-70A87-014
FILE NAME: pw:\\ildot-pw.bentley.com:PWIDOT\Documents\IDOT Offices\Bureau of Bridges and Structures\Projects\0100198\CADD Plans\0100198_70A87.dgn
5/17/2023 2:00:48 PM

DESIGNED - RYAN P. NEGANGARD	EXAMINED	ENGINEER OF BRIDGE DESIGN	DATE - MAY 16, 2023
CHECKED - DAVID H. RICHTER			
DRAWN - DENNIS A. POP	PASSED	ENGINEER OF BRIDGES AND STRUCTURES	REVISED -
CHECKED - R.P.N. / D.H.R. / G.R.A.			REVISED -

STATE OF ILLINOIS
DEPARTMENT OF TRANSPORTATION

TOP OF NORTH APPROACH SLAB ELEVATIONS
STRUCTURE NO. 010-0198 (NB)

SHEET 14 OF 42 SHEETS

F.A.I. RTE.	SECTION	COUNTY	TOTAL SHEETS	SHEET NO.
57	(10-30)BR	CHAMPAIGN	107	53

CONTRACT NO. 70A87

ILLINOIS | FED. AID PROJECT

WEST EDGE OF SHOULDER

Location	Station	Offset	Theoretical Grade Elevations	Theoretical Grade Elevations Adjusted For Grinding
S. End of S. Appr. Slab	117+64.07	-22.00	728.63	728.65
A	117+74.07	-22.00	728.53	728.55
B	117+84.07	-22.00	728.43	728.45
N. End of S. Appr. Slab	117+94.07	-22.00	728.33	728.35

WEST EDGE OF ROADWAY

Location	Station	Offset	Theoretical Grade Elevations	Theoretical Grade Elevations Adjusted For Grinding
S. End of S. Appr. Slab	117+63.34	-12.00	728.84	728.86
A	117+73.34	-12.00	728.74	728.76
B	117+83.34	-12.00	728.64	728.66
N. End of S. Appr. Slab	117+93.34	-12.00	728.54	728.56

STAGE CONSTRUCTION JOINT

Location	Station	Offset	Theoretical Grade Elevations	Theoretical Grade Elevations Adjusted For Grinding
S. End of S. Appr. Slab	117+62.87	-5.58	728.94	728.96
A	117+72.87	-5.58	728.84	728.86
B	117+82.87	-5.58	728.74	728.76
N. End of S. Appr. Slab	117+92.87	-5.58	728.64	728.66

℄ ROADWAY & (SB) PG

Location	Station	Offset	Theoretical Grade Elevations	Theoretical Grade Elevations Adjusted For Grinding
S. End of S. Appr. Slab	117+62.46	0.00	729.02	729.04
A	117+72.46	0.00	728.93	728.95
B	117+82.46	0.00	728.83	728.85
N. End of S. Appr. Slab	117+92.46	0.00	728.73	728.75

EAST EDGE OF ROADWAY

Location	Station	Offset	Theoretical Grade Elevations	Theoretical Grade Elevations Adjusted For Grinding
S. End of S. Appr. Slab	117+61.59	12.00	728.85	728.87
A	117+71.59	12.00	728.76	728.78
B	117+81.59	12.00	728.66	728.68
N. End of S. Appr. Slab	117+91.59	12.00	728.56	728.58

EAST EDGE OF SHOULDER

Location	Station	Offset	Theoretical Grade Elevations	Theoretical Grade Elevations Adjusted For Grinding
S. End of S. Appr. Slab	117+61.15	18.00	728.74	728.76
A	117+71.15	18.00	728.64	728.66
B	117+81.15	18.00	728.54	728.56
N. End of S. Appr. Slab	117+91.15	18.00	728.44	728.46

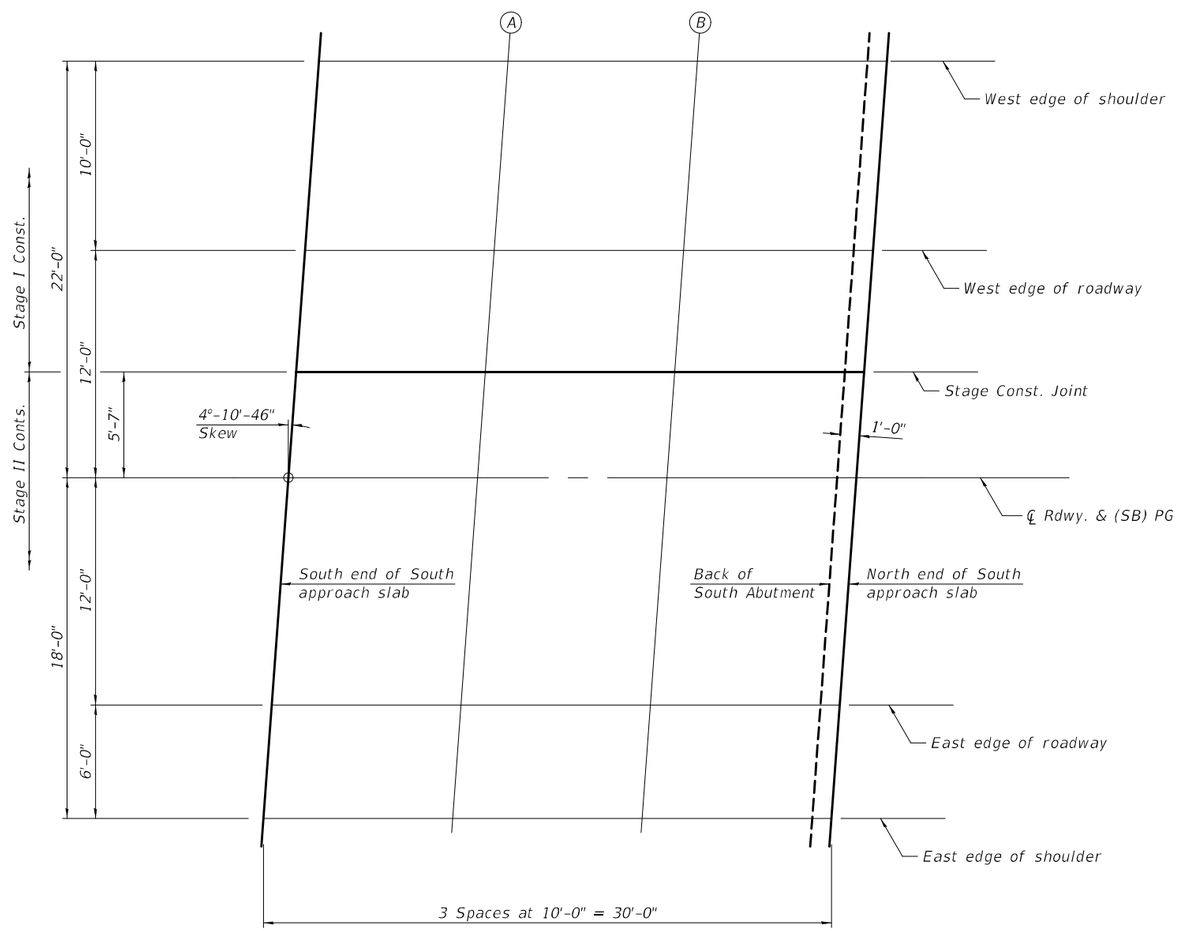

PLAN

DESIGNED - RYAN P. NEGANGARD	EXAMINED	DATE - MAY 16, 2023	STATE OF ILLINOIS DEPARTMENT OF TRANSPORTATION
CHECKED - DAVID H. RICHTER	ENGINEER OF BRIDGE DESIGN		
DRAWN - DENNIS A. POP	PASSED	REVISED -	
CHECKED - R.P.N. / D.H.R. / G.R.A.	ENGINEER OF BRIDGES AND STRUCTURES	REVISED -	

TOP OF SOUTH APPROACH SLAB ELEVATIONS
STRUCTURE NO. 010-0199 (SB)

SHEET 15 OF 42 SHEETS

F.A.I. RTE.	SECTION	COUNTY	TOTAL SHEETS	SHEET NO.
57	(10-30)BR	CHAMPAIGN	107	54

CONTRACT NO. 70A87

ILLINOIS FED. AID PROJECT

MODEL: 0100198-70A87-015
FILE NAME: pw:\\ildot-pw.bentley.com:PWIDOT\Documents\IDOT Offices\Bureau of Bridges and Structures\Projects\0100198\CADD Plans\0100198_70A87.dgn
5/17/2023 2:00:49 PM

WEST EDGE OF SHOULDER

Location	Station	Offset	Theoretical Grade Elevations	Theoretical Grade Elevations Adjusted For Grinding
S. End of N. Appr. Slab	119+15.56	-22.00	726.91	726.93
L	119+25.56	-22.00	726.77	726.79
M	119+35.56	-22.00	726.64	726.66
N. End of N. Appr. Slab	119+45.56	-22.00	726.50	726.52

WEST EDGE OF ROADWAY

Location	Station	Offset	Theoretical Grade Elevations	Theoretical Grade Elevations Adjusted For Grinding
S. End of N. Appr. Slab	119+14.83	-12.00	727.12	727.14
L	119+24.83	-12.00	726.98	727.00
M	119+34.83	-12.00	726.85	726.87
N. End of N. Appr. Slab	119+44.83	-12.00	726.71	726.73

STAGE CONSTRUCTION JOINT

Location	Station	Offset	Theoretical Grade Elevations	Theoretical Grade Elevations Adjusted For Grinding
S. End of N. Appr. Slab	119+14.36	-5.58	727.22	727.24
L	119+24.36	-5.58	727.09	727.11
M	119+34.36	-5.58	726.95	726.97
N. End of N. Appr. Slab	119+44.36	-5.58	726.81	726.83

℄ ROADWAY & (SB) PG

Location	Station	Offset	Theoretical Grade Elevations	Theoretical Grade Elevations Adjusted For Grinding
S. End of N. Appr. Slab	119+13.96	0.00	727.31	727.33
L	119+23.96	0.00	727.18	727.20
M	119+33.96	0.00	727.04	727.06
N. End of N. Appr. Slab	119+43.96	0.00	726.90	726.92

EAST EDGE OF ROADWAY

Location	Station	Offset	Theoretical Grade Elevations	Theoretical Grade Elevations Adjusted For Grinding
S. End of N. Appr. Slab	119+13.08	12.00	727.14	727.16
L	119+23.08	12.00	727.01	727.03
M	119+33.08	12.00	726.87	726.89
N. End of N. Appr. Slab	119+43.08	12.00	726.74	726.76

EAST EDGE OF SHOULDER

Location	Station	Offset	Theoretical Grade Elevations	Theoretical Grade Elevations Adjusted For Grinding
S. End of N. Appr. Slab	119+12.64	18.00	727.02	727.04
L	119+22.64	18.00	726.89	726.91
M	119+32.64	18.00	726.76	726.78
N. End of N. Appr. Slab	119+42.64	18.00	726.62	726.64

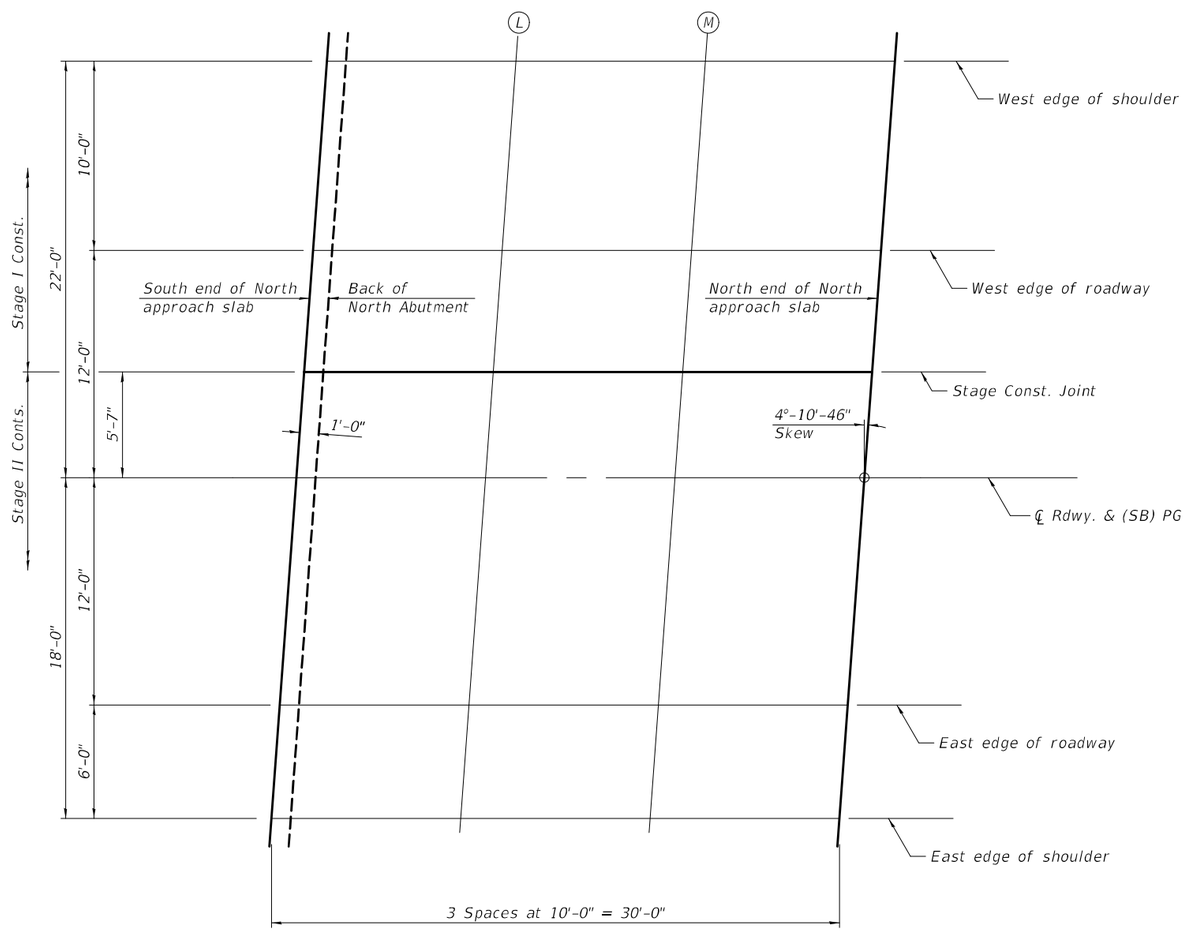

PLAN

DESIGNED - RYAN P. NEGANGARD	EXAMINED	DATE - MAY 16, 2023	STATE OF ILLINOIS DEPARTMENT OF TRANSPORTATION
CHECKED - DAVID H. RICHTER	ENGINEER OF BRIDGE DESIGN		
DRAWN - DENNIS A. POP	PASSED	REVISED -	
CHECKED - R.P.N. / D.H.R. / G.R.A.	ENGINEER OF BRIDGES AND STRUCTURES	REVISED -	

TOP OF NORTH APPROACH SLAB ELEVATIONS
STRUCTURE NO. 010-0199 (SB)

SHEET 16 OF 42 SHEETS

F.A.I. RTE.	SECTION	COUNTY	TOTAL SHEETS	SHEET NO.
57	(10-30)BR	CHAMPAIGN	107	55

CONTRACT NO. 70A87

ILLINOIS FED. AID PROJECT

MODEL: 0100198-70A87-016
FILE NAME: pw:\\ildot-pw.bentley.com:PWIDOT\Documents\IDOT Offices\Bureau of Bridges and Structures\Projects\0100198\CADD Plans\0100198_70A87.dgn
5/17/2023 2:00:50 PM

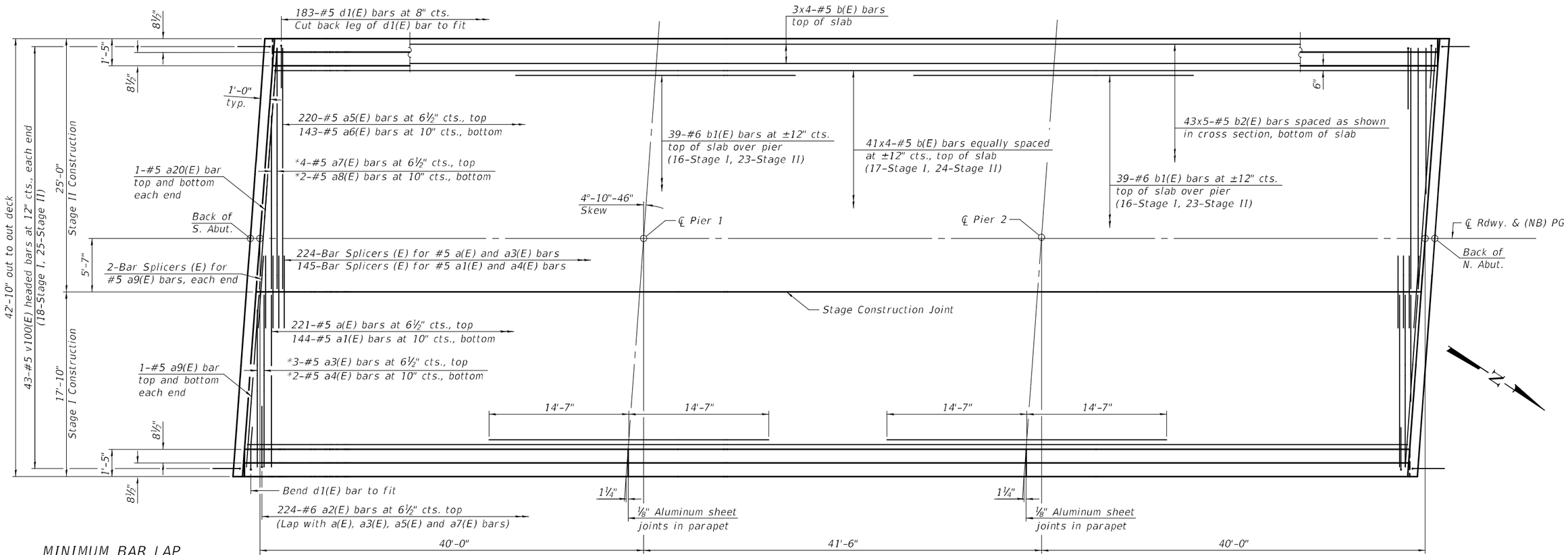

MINIMUM BAR LAP

#5 bar = 3'-6"

PLAN

Notes:
See sheet 19 of 42 for superstructure details and Bill of Material.
Bars indicated thus 43x5-#5 etc. indicates 43 lines of bars with 5 lengths per line.

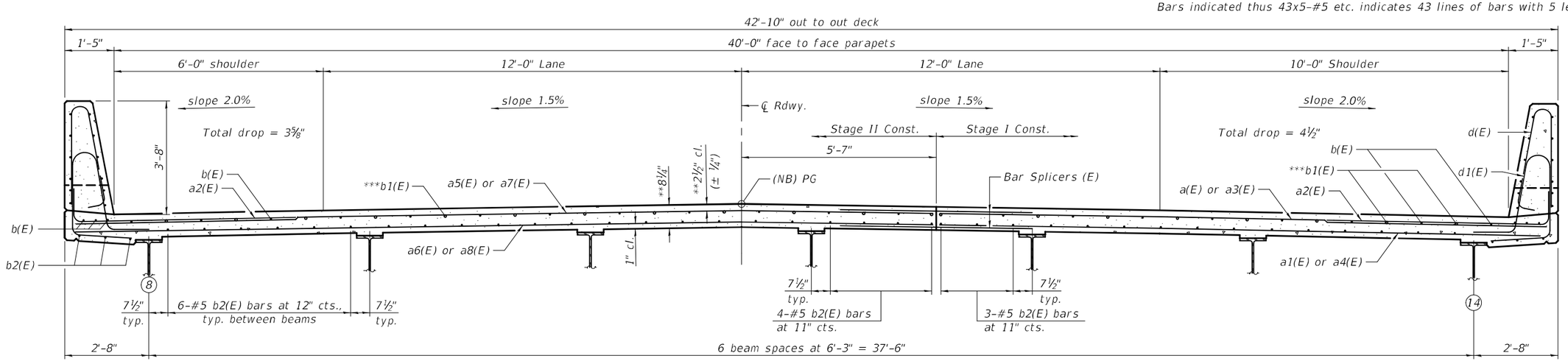

CROSS SECTION

(Looking North)

* See Field Cutting Diagram on sheet 19 of 42.
** Prior to grinding.
*** Bars are present near pier only.

DESIGNED - RYAN P. NEGANGARD	EXAMINED		DATE - MAY 16, 2023	STATE OF ILLINOIS DEPARTMENT OF TRANSPORTATION	SUPERSTRUCTURE STRUCTURE NO. 010-0198 (NB)
CHECKED - DAVID H. RICHTER		ENGINEER OF BRIDGE DESIGN			
DRAWN - DENNIS A. POP	PASSED		REVISED -		
CHECKED - R.P.N. / D.H.R. / G.R.A.		ENGINEER OF BRIDGES AND STRUCTURES	REVISED -		SHEET 17 OF 42 SHEETS

F.A.I. RTE.	SECTION	COUNTY	TOTAL SHEETS	SHEET NO.
57	(10-30)BR	CHAMPAIGN	107	56
		CONTRACT NO. 70A87		
		ILLINOIS	FED. AID PROJECT	

MODEL: 0100198-70A87-017
FILE NAME: pw:\\ildot-pw.bentley.com:PWIDOT\Documents\IDOT Offices\Bureau of Bridges and Structures\Projects\0100198\CADD Plans\0100198_70A87.dgn
5/17/2023 2:00:51 PM

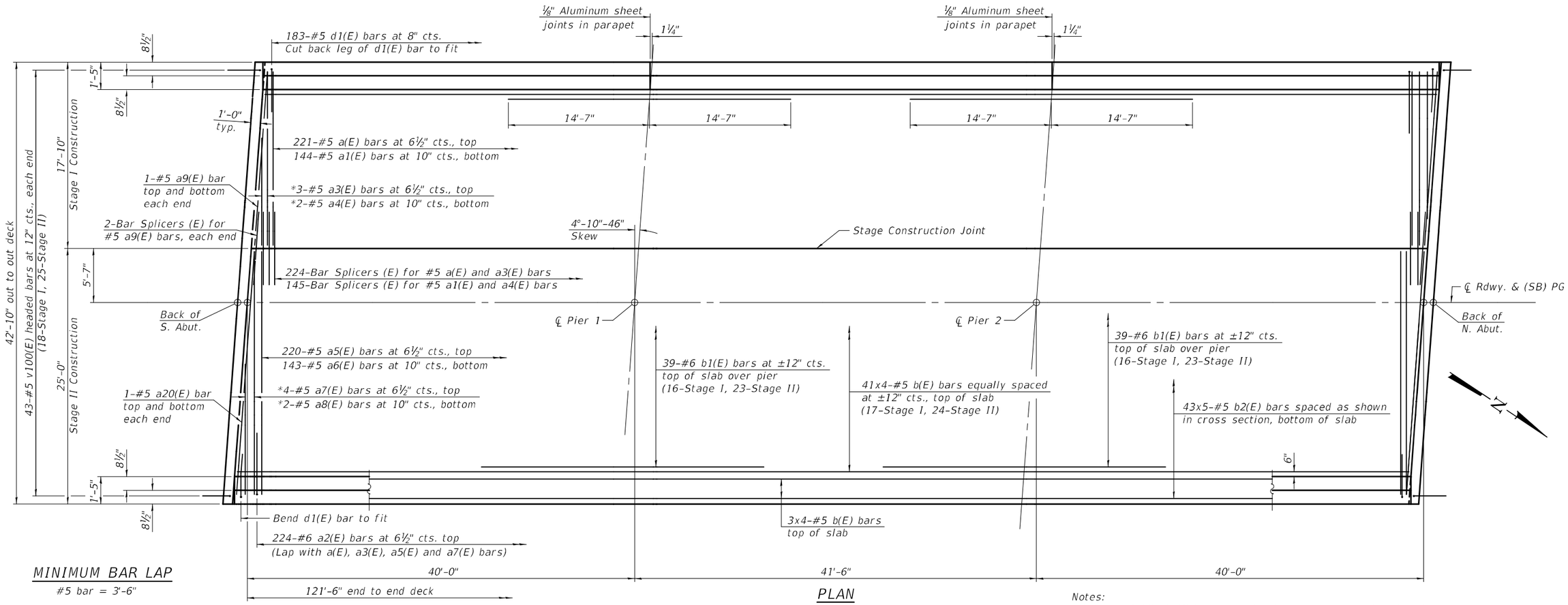

MINIMUM BAR LAP

#5 bar = 3'-6"

PLAN

Notes:
See sheet 19 of 42 for superstructure details and Bill of Material.
Bars indicated thus 43x5-#5 etc. indicates 43 lines of bars with 5 lengths per line.

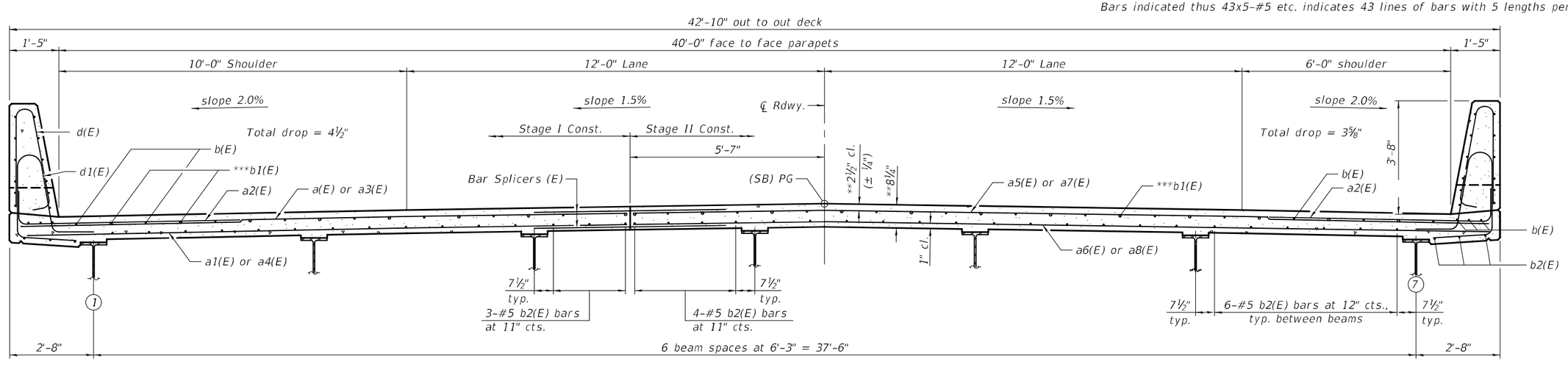

CROSS SECTION

(Looking North)

* See Field Cutting Diagram on sheet 19 of 42.
** Prior to grinding.
*** Bars are present near pier only.

DESIGNED - RYAN P. NEGANGARD	EXAMINED	ENGINEER OF BRIDGE DESIGN	DATE - MAY 16, 2023	STATE OF ILLINOIS DEPARTMENT OF TRANSPORTATION	SUPERSTRUCTURE STRUCTURE NO. 010-0199 (SB)	F.A.I. RTE.	SECTION	COUNTY	TOTAL SHEETS	SHEET NO.
CHECKED - DAVID H. RICHTER						57	(10-30)BR	CHAMPAIGN	107	57
DRAWN - DENNIS A. POP	PASSED	ENGINEER OF BRIDGES AND STRUCTURES	REVISED -					CONTRACT NO. 70A87		
CHECKED - R.P.N. / D.H.R. / G.R.A.			REVISED -		SHEET 18 OF 42 SHEETS		ILLINOIS	FED. AID PROJECT		

MODEL: 0100198-70A87-018
FILE NAME: pw:\\ildot-pw.bentley.com:PWIDOT\Documents\IDOT Offices\Bureau of Bridges and Structures\Projects\0100198\CADD Plans\0100198_70A87.dgn
5/17/2023 2:00:53 PM

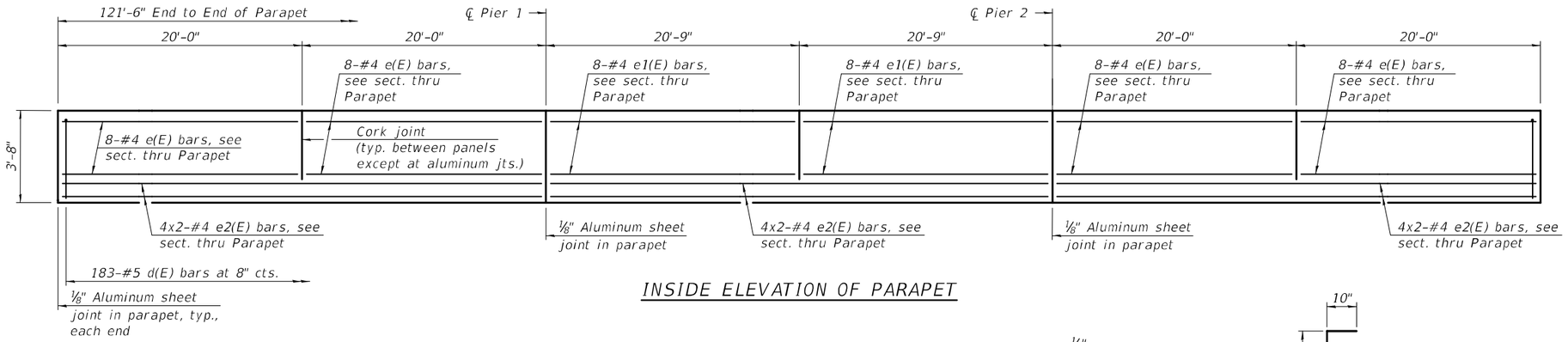

INSIDE ELEVATION OF PARAPET

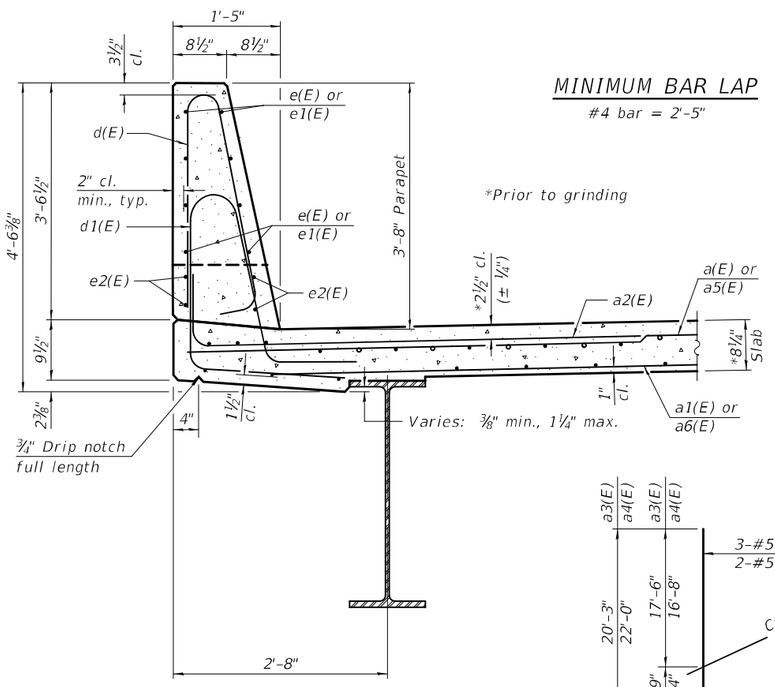

MINIMUM BAR LAP

#4 bar = 2'-5"

*Prior to grinding

SECTION THRU PARAPET

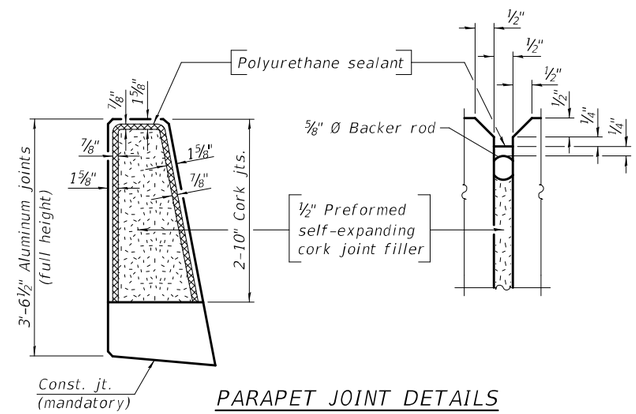

PARAPET JOINT DETAILS

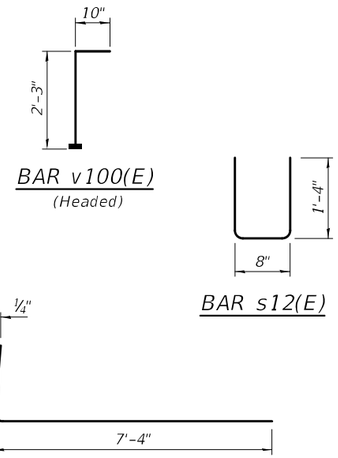

BAR v100(E)

(Headed)

BAR s12(E)

BAR a2(E)

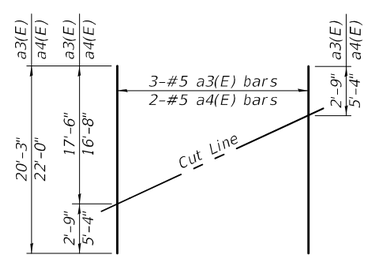

FIELD CUTTING DIAGRAM

Order a3(E) and a4(E) bars full length. Cut as shown and use remainder of bars in opposite end of deck.

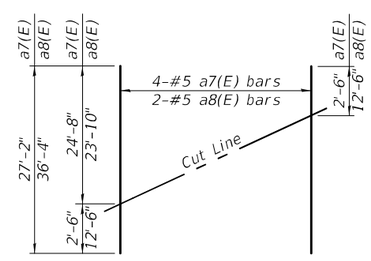

FIELD CUTTING DIAGRAM

Order a7(E) and a8(E) bars full length. Cut as shown and use remainder of bars in opposite end of deck.

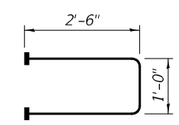

BAR s10(E)

(Headed)

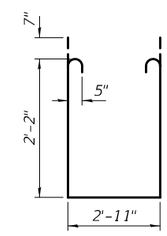

BAR s11(E)

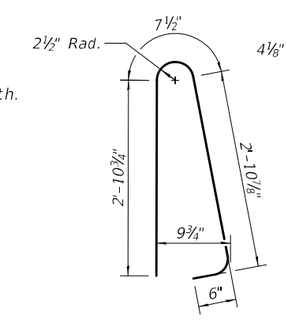

BAR d(E)

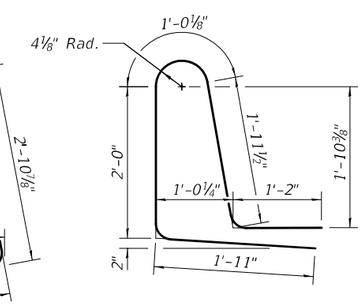

BAR d1(E)

SUPERSTRUCTURE BILL OF MATERIAL

Bar	No.	Size	Length	Shape
a(E)	442	#5	17'-6"	
a1(E)	288	#5	16'-8"	
a2(E)	896	#6	8'-4"	
a3(E)	6	#5	20'-3"	
a4(E)	4	#5	22'-0"	
a5(E)	440	#5	24'-8"	
a6(E)	286	#5	23'-10"	
a7(E)	8	#5	27'-2"	
a8(E)	4	#5	36'-4"	
a9(E)	8	#5	17'-7"	
a20(E)	8	#5	24'-9"	
b(E)	376	#5	32'-11"	
b1(E)	156	#6	29'-2"	
b2(E)	430	#5	27'-1"	
d(E)	732	#5	7'-0"	
d1(E)	732	#5	8'-1"	
e(E)	128	#4	19'-8"	
e1(E)	64	#4	20'-5"	
e2(E)	96	#4	21'-10"	
m10(E)	20	#6	17'-7"	
m11(E)	60	#6	5'-11"	
m12(E)	24	#6	2'-4"	
m13(E)	20	#6	24'-9"	
m14(E)	8	#4	17'-7"	
m15(E)	8	#4	24'-9"	
s10(E)	172	#5	6'-0"	
s11(E)	172	#5	8'-5"	
s12(E)	172	#4	3'-4"	
v100(E)	172	#5	3'-1"	
Reinforcement Bars, Epoxy Coated			Pound	96,670
Concrete Superstructure			Cu. Yd.	397.1

Bars indicated thus 4x2-#4 etc. indicates 4 lines of bars with 2 lengths per line.

Notes:

The ⅛" aluminum sheet shall be ASTM B 209 alloy 3003-H14 and coated to minimize reaction with wet concrete. Cost included with Concrete Superstructure.

The polyurethane sealant shall be according to Article 1050.04 of the Std. Spec. and the color shall be gray.

Headed bars shall conform to ASTM A970 with threaded attachment; Class HA; and reinforcement bars conforming to ASTM A706. Cost included with Reinforcement Bars, Epoxy Coated.

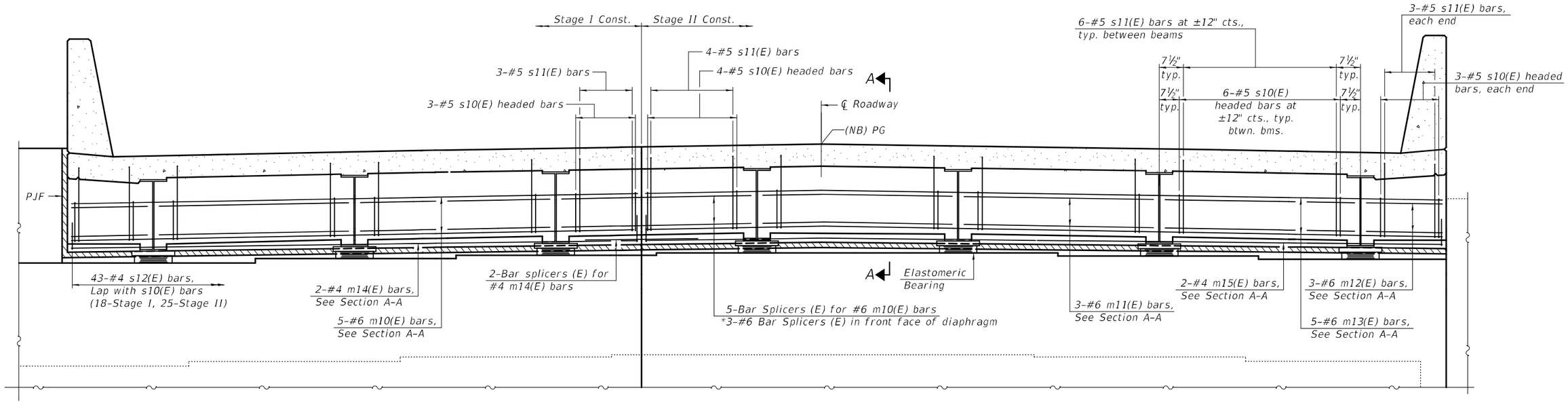

DIAPHRAGM AT SOUTH ABUTMENT

(South abutment looking South, North abutment similar)

* See sheet 42 of 42 for detail of bar splicer in front face of diaphragm.
** Prior to grinding.

Notes:
See sheet 19 of 42 for superstructure details and Bill of Material.
See sheet 22 of 42 for Section A-A.
The s10(E), s11(E) and s12(E) bars shall be placed parallel to the beams. Spacing for these bars shall be at right angles to the beams.
The approach slab seat shall have a constant slope determined from the control points shown.
Cost of fabric reinforced elastomeric mat, galvanized plate, stainless steel expansion bolts with nuts and washers and installation are included in the cost of Concrete Superstructure.

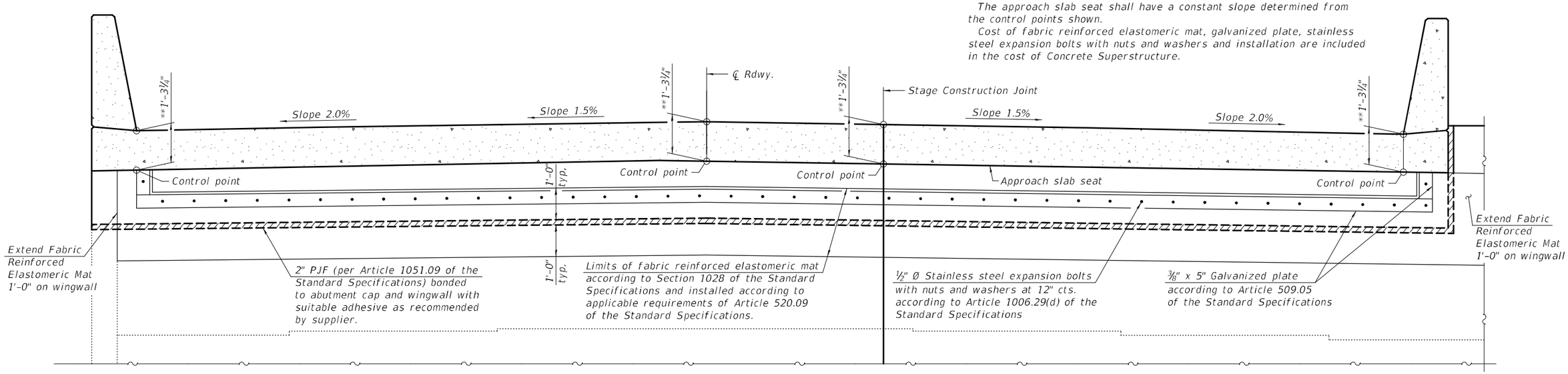

VIEW B-B

MODEL: 0100198-70A87-020
FILE NAME: pw:\\ildot-pw.bentley.com:PWIDOT\Documents\IDOT Offices\Bureau of Bridges and Structures\Projects\0100198\CADD Plans\0100198_70A87.dgn
5/17/2023 2:00:55 PM

DESIGNED - RYAN P. NEGANGARD	EXAMINED	ENGINEER OF BRIDGE DESIGN	DATE - MAY 16, 2023	STATE OF ILLINOIS DEPARTMENT OF TRANSPORTATION	DIAPHRAGM DETAILS STRUCTURE NO. 010-0198 (NB)
CHECKED - DAVID H. RICHTER					
DRAWN - DENNIS A. POP	PASSED	ENGINEER OF BRIDGES AND STRUCTURES	REVISED -		SHEET 20 OF 42 SHEETS
CHECKED - R.P.N. / D.H.R. / G.R.A.			REVISED -		

F.A.I. RTE.	SECTION	COUNTY	TOTAL SHEETS	SHEET NO.
57	(10-30)BR	CHAMPAIGN	107	59
		CONTRACT NO. 70A87		
		ILLINOIS	FED. AID PROJECT	

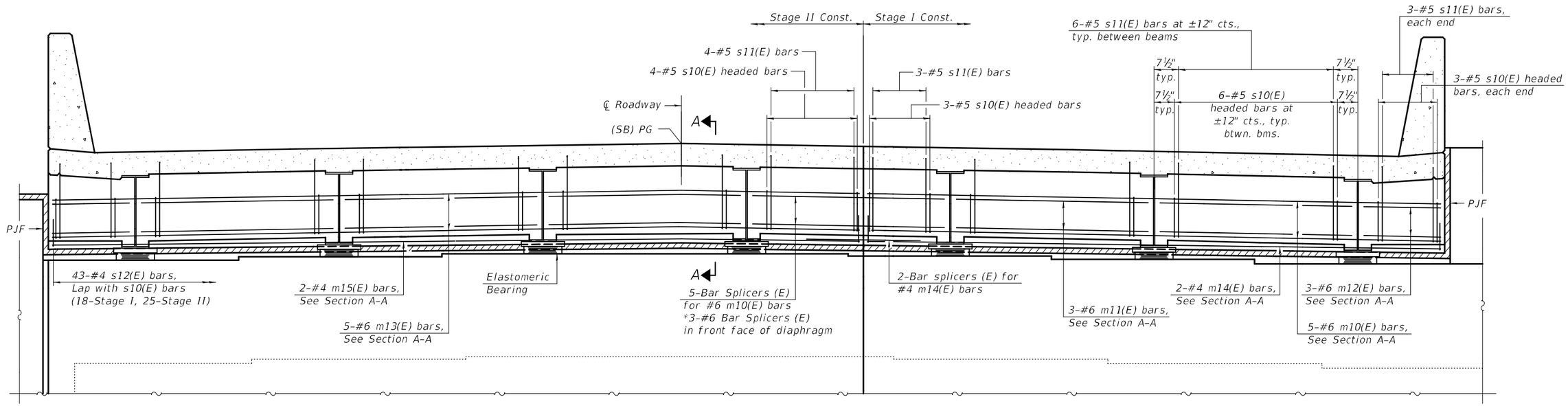

DIAPHRAGM AT SOUTH ABUTMENT

(South abutment looking South, North abutment similar)

* See sheet 42 of 42 for detail of bar splicer in front face of diaphragm.
** Prior to grinding.

Notes:
See sheet 19 of 42 for superstructure details and Bill of Material.
See sheet 22 of 42 for Section A-A.
The s10(E), s11(E) and s12(E) bars shall be placed parallel to the beams. Spacing for these bars shall be at right angles to the beams.
The approach slab seat shall have a constant slope determined from the control points shown.
Cost of fabric reinforced elastomeric mat, galvanized plate, stainless steel expansion bolts with nuts and washers and installation are included in the cost of Concrete Superstructure.

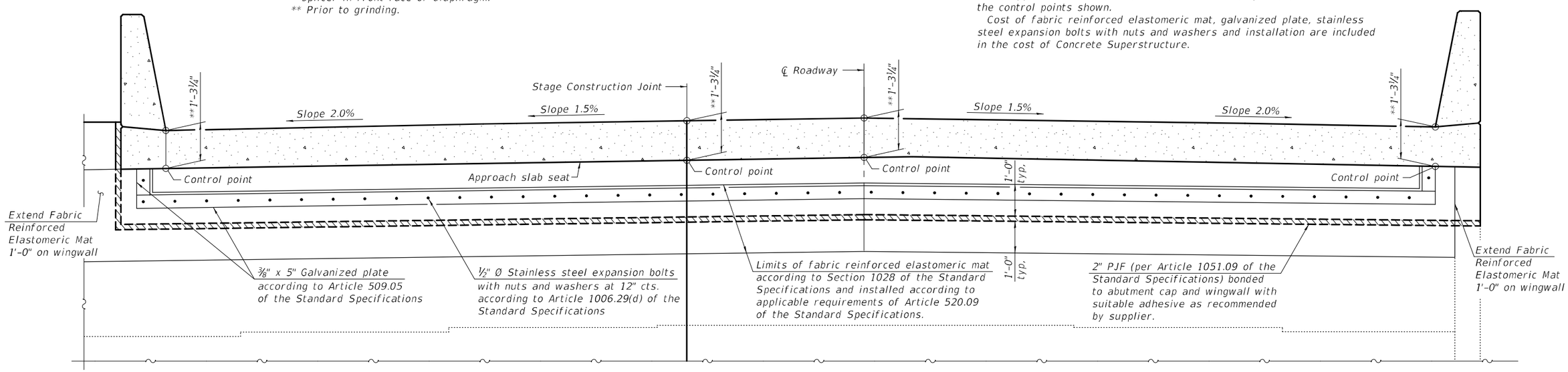

VIEW B-B

MODEL: 0100198-70A87-021
FILE NAME: pw:\\ildot-pw.bentley.com:PWIDOT\Documents\IDOT Offices\Bureau of Bridges and Structures\Projects\0100198\CADD Plans\0100198_70A87.dgn
5/17/2023 2:00:56 PM

DESIGNED - RYAN P. NEGANGARD	EXAMINED	DATE - MAY 16, 2023	
CHECKED - DAVID H. RICHTER	ENGINEER OF BRIDGE DESIGN		
DRAWN - DENNIS A. POP	PASSED	REVISED -	
CHECKED - R.P.N. / D.H.R. / G.R.A.	ENGINEER OF BRIDGES AND STRUCTURES	REVISED -	

STATE OF ILLINOIS
DEPARTMENT OF TRANSPORTATION

DIAPHRAGM DETAILS
STRUCTURE NO. 010-0199 (SB)

SHEET 21 OF 42 SHEETS

F.A.I. RTE.	SECTION	COUNTY	TOTAL SHEETS	SHEET NO.
57	(10-30)BR	CHAMPAIGN	107	60
		CONTRACT NO. 70A87		
		ILLINOIS	FED. AID PROJECT	

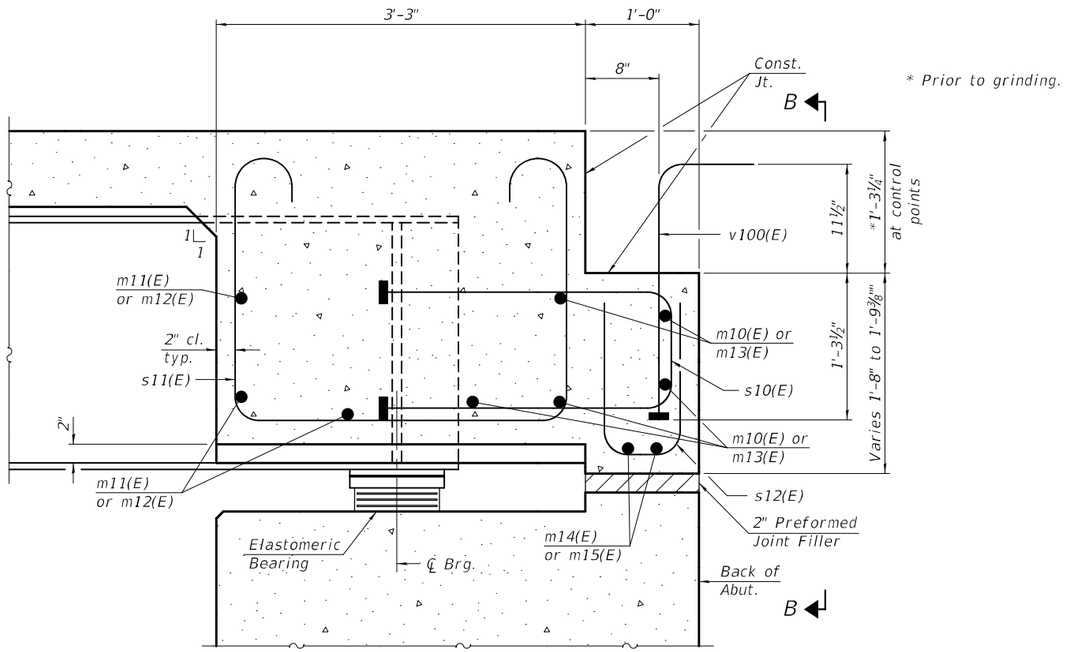

SECTION A-A
(at Rt. L's)

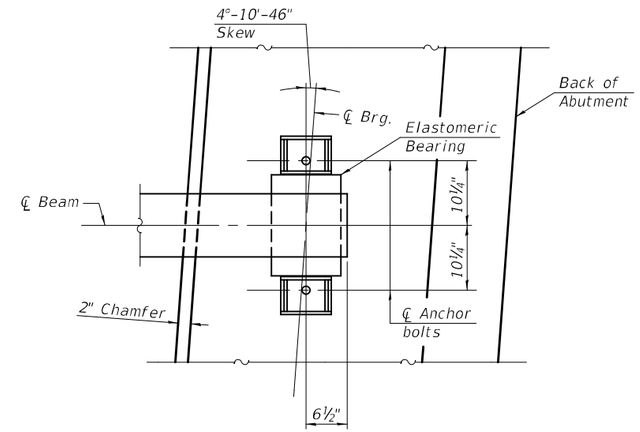

PLAN AT ABUTMENT
(Showing bottom flange of beam)

Notes:
See sheet 19 of 42 for superstructure details and Bill of Material.
See sheets 20 and 21 of 42 for view B-B and PJF details.
See sheets 33 thru 37 of 42 for additional details of PJF at wingwalls.

MODEL: 0100198-70A87-022
FILE NAME: pw:\\ildo-pw.bentley.com:PWIDOT\Documents\IDOT Offices\Bureau of Bridges and Structures\Projects\0100198\CADD Plans\0100198_70A87.dgn
5/17/2023 2:00:57 PM

DESIGNED -	RYAN P. NEGANGARD	EXAMINED	ENGINEER OF BRIDGE DESIGN
CHECKED -	DAVID H. RICHTER		
DRAWN -	DENNIS A. POP	PASSED	ENGINEER OF BRIDGES AND STRUCTURES
CHECKED -	R.P.N. / D.H.R. / G.R.A.		

DATE - MAY 16, 2023
REVISED -
REVISED -

STATE OF ILLINOIS
DEPARTMENT OF TRANSPORTATION

DIAPHRAGM DETAILS
STRUCTURE NO. 010-0198 (NB) & 010-0199 (SB)
SHEET 22 OF 42 SHEETS

F.A.I. RTE.	SECTION	COUNTY	TOTAL SHEETS	SHEET NO.
57	(10-30)BR	CHAMPAIGN	107	61

CONTRACT NO. 70A87
ILLINOIS FED. AID PROJECT

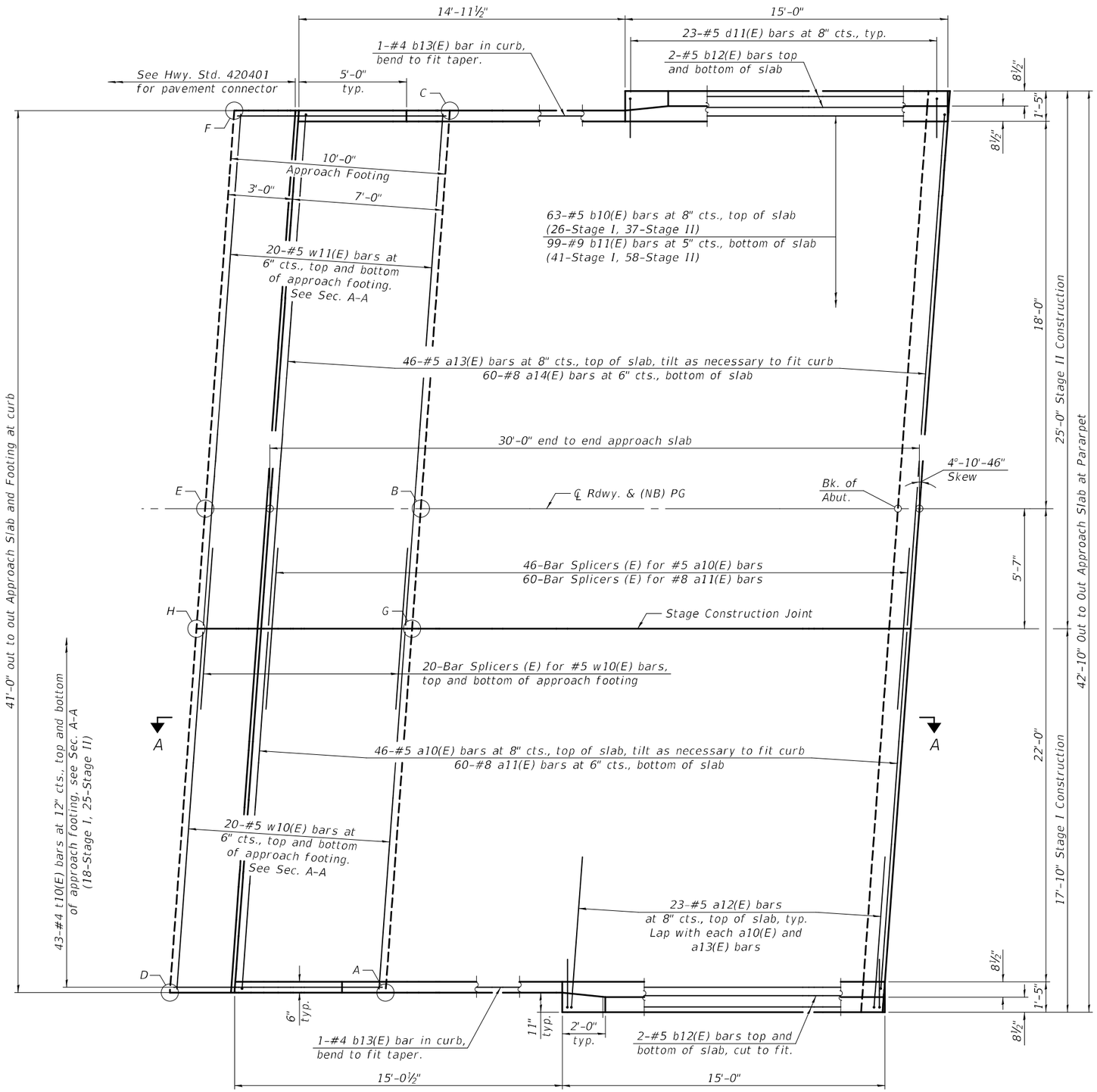

PLAN

(South approach shown, North approach similar)

TOP AND BOTTOM ELEVATIONS FOR APPROACH FOOTING

South Approach			North Approach		
Point/ Location	Top	Bottom	Point/ Location	Top	Bottom
A - NE	727.39	726.56	A - SW	725.51	724.68
B - N ℄	727.77	726.94	B - S ℄	725.84	725.01
C - NW	727.45	726.62	C - SE	725.47	724.64
D - SE	727.49	726.66	D - NW	725.37	724.54
E - S ℄	727.86	727.03	E - N ℄	725.70	724.87
F - SW	727.54	726.71	F - NE	725.33	724.50
G - N SCJ	727.69	726.86	G - S SCJ	725.76	724.93
H - S SCJ	727.78	726.95	H - N SCJ	725.62	724.79

(Sheet 1 of 4)

DESIGNED - RYAN P. NEGANGARD	EXAMINED	DATE - MAY 16, 2023	STATE OF ILLINOIS DEPARTMENT OF TRANSPORTATION
CHECKED - DAVID H. RICHTER	ENGINEER OF BRIDGE DESIGN		
DRAWN - DENNIS A. POP	PASSED	REVISED -	
CHECKED - R.P.N. / D.H.R. / G.R.A.	ENGINEER OF BRIDGES AND STRUCTURES	REVISED -	

BRIDGE APPROACH SLAB
STRUCTURE NO. 010-0198 (NB)

SHEET 23 OF 42 SHEETS

F.A.I. RTE.	SECTION	COUNTY	TOTAL SHEETS	SHEET NO.
57	(10-30)BR	CHAMPAIGN	107	62

CONTRACT NO. 70A87

ILLINOIS | FED. AID PROJECT

MODEL: 0100198-70A87-023
FILE NAME: pw:\\ildot-pw.bentley.com:PWIDOT\Documents\IDOT Offices\Bureau of Bridges and Structures\Projects\0100198\CADD Plans\0100198_70A87.dgn
5/17/2023 2:00:58 PM

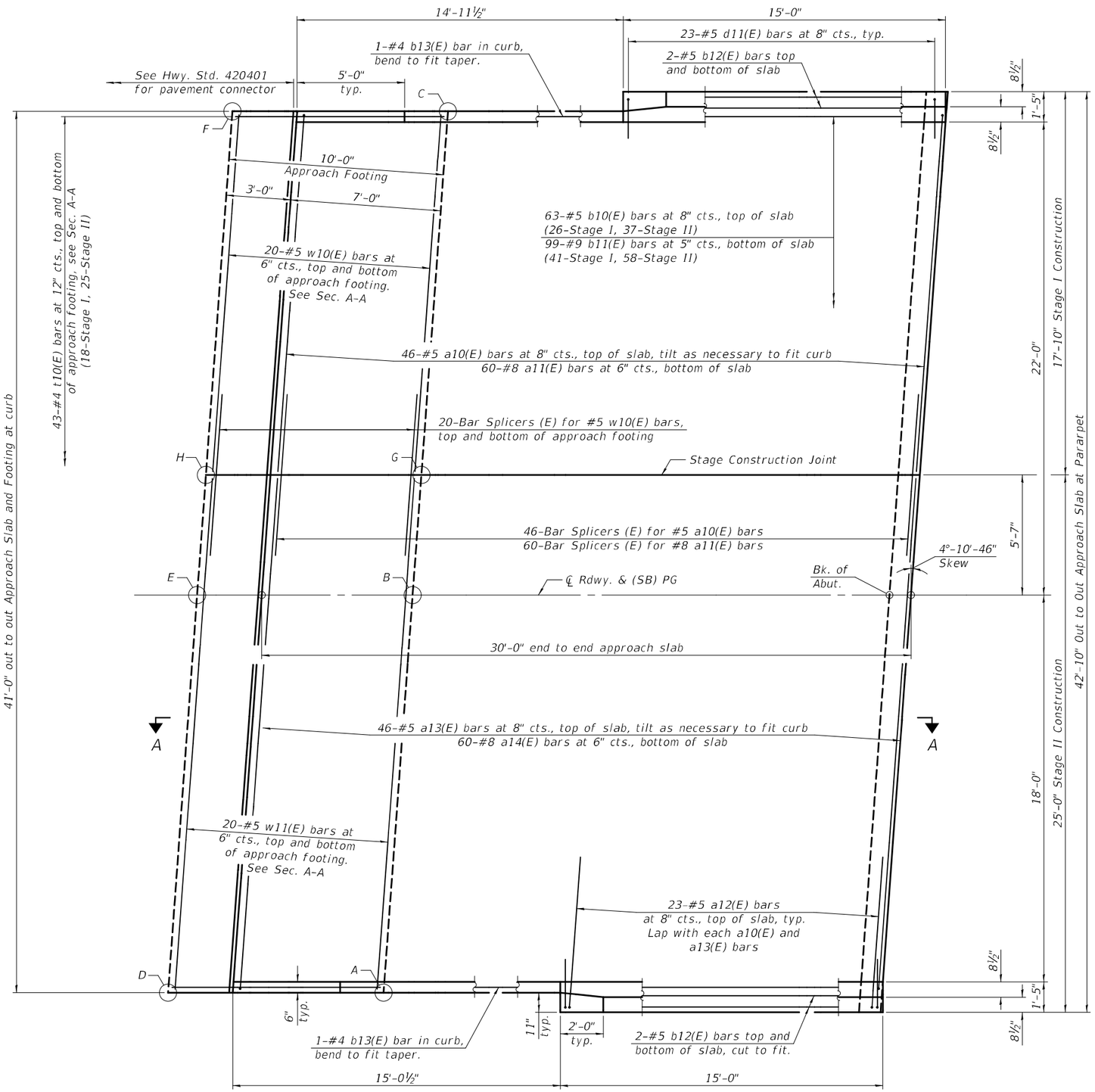

PLAN

(South approach shown, North approach similar)

TOP AND BOTTOM ELEVATIONS FOR APPROACH FOOTING

South Approach			North Approach		
Point/ Location	Top	Bottom	Point/ Location	Top	Bottom
A - NE	727.41	726.58	A - SW	725.34	724.51
B - N ℄	727.71	726.88	B - S ℄	725.75	724.92
C - NW	727.30	726.47	C - SE	725.46	724.63
D - SE	727.51	726.68	D - NW	725.20	724.37
E - S ℄	727.80	726.97	E - N ℄	725.61	724.78
F - SW	727.40	726.57	F - NE	725.32	724.49
G - N SCJ	727.62	726.79	G - S SCJ	725.66	724.83
H - S SCJ	727.72	726.89	H - N SCJ	725.52	724.69

(Sheet 2 of 4)

DESIGNED - RYAN P. NEGANGARD	EXAMINED	DATE - MAY 16, 2023	STATE OF ILLINOIS DEPARTMENT OF TRANSPORTATION
CHECKED - DAVID H. RICHTER	ENGINEER OF BRIDGE DESIGN		
DRAWN - DENNIS A. POP	PASSED	REVISED -	
CHECKED - R.P.N. / D.H.R. / G.R.A.	ENGINEER OF BRIDGES AND STRUCTURES	REVISED -	

BRIDGE APPROACH SLAB
STRUCTURE NO. 010-0199 (SB)

SHEET 24 OF 42 SHEETS

F.A.I. RTE.	SECTION	COUNTY	TOTAL SHEETS	SHEET NO.
57	(10-30)BR	CHAMPAIGN	107	63

CONTRACT NO. 70A87

ILLINOIS | FED. AID PROJECT

MODEL: 0100198-70A87-024
FILE NAME: pw:\\ildo-pw.bentley.com:PWIDOT\Documents\IDOT Offices\Bureau of Bridges and Structures\Projects\0100198\CADD Plans\0100198_70A87.dgn
5/17/2023 2:00:59 PM

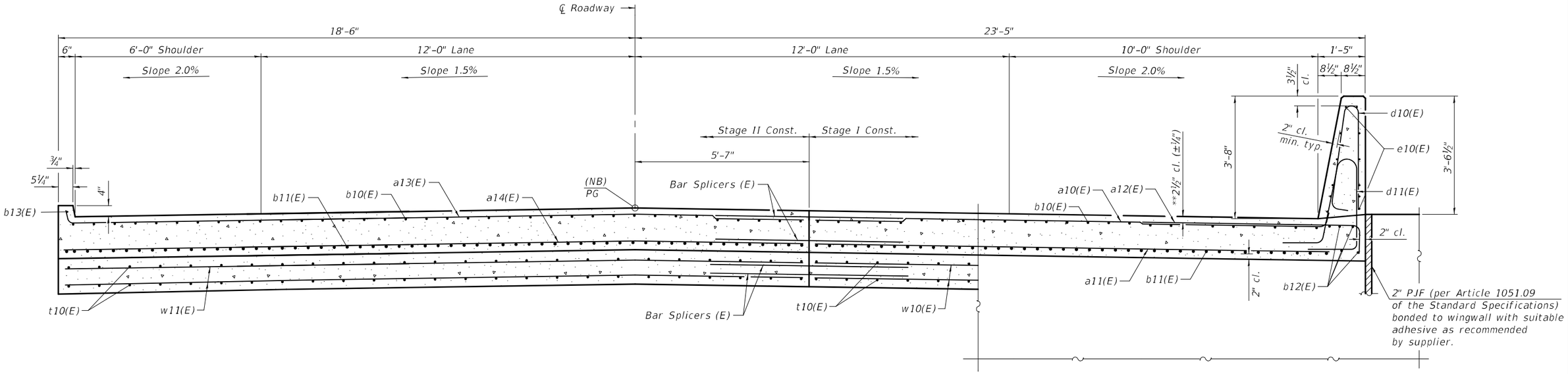

AT APPROACH FOOTING

NEAR ABUTMENT

010-0198 (NB) - CROSS SECTION

(Looking North)

** Prior to grinding

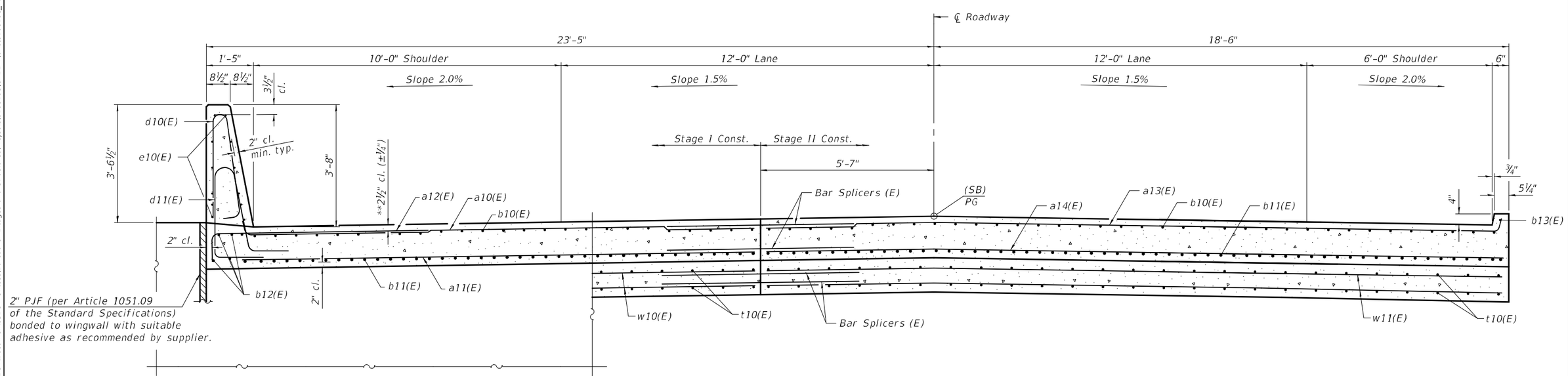

NEAR ABUTMENT

AT APPROACH FOOTING

010-0199 (SB) - CROSS SECTION

(Looking North)

(Sheet 3 of 4)

DESIGNED - RYAN P. NEGANGARD	EXAMINED	ENGINEER OF BRIDGE DESIGN	DATE - MAY 16, 2023	STATE OF ILLINOIS DEPARTMENT OF TRANSPORTATION	BRIDGE APPROACH SLAB DETAILS STRUCTURE NO. 010-0198 (NB) & 010-0199 (SB)
CHECKED - DAVID H. RICHTER					
DRAWN - DENNIS A. POP	PASSED	ENGINEER OF BRIDGES AND STRUCTURES	REVISED -		
CHECKED - R.P.N. / D.H.R. / G.R.A.			REVISED -		SHEET 25 OF 42 SHEETS

F.A.I. RTE.	SECTION	COUNTY	TOTAL SHEETS	SHEET NO.
57	(10-30)BR	CHAMPAIGN	107	64
		CONTRACT NO. 70A87		
		ILLINOIS	FED. AID PROJECT	

MODEL: 0100198-70A87-025
FILE NAME: pw:\\ildot-pw.bentley.com:PWIDOT\Documents\IDOT Offices\Bureau of Bridges and Structures\Projects\0100198\CADD Plans\0100198_70A87.dgn
5/17/2023 2:01:00 PM

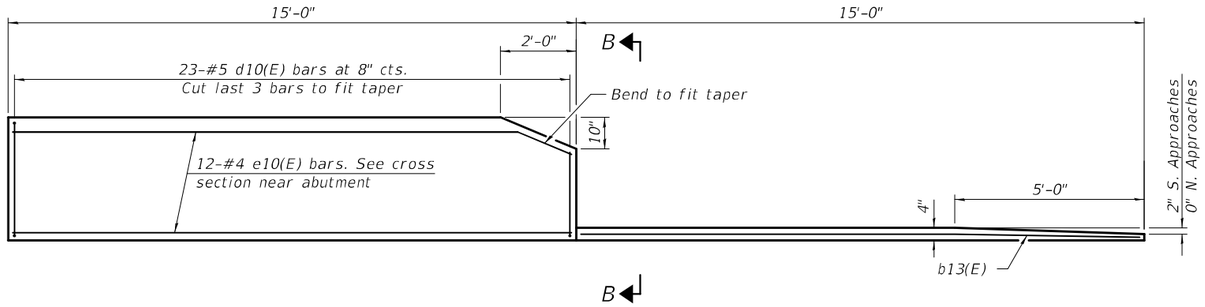

INSIDE ELEVATION OF PARAPET AND CURB

Notes:

The joint opening shall be adjusted for temperature per Article 520.04 of the Standard Specifications. However, since this detail is for jointless structures, the length of bridge used to calculate the adjustment shall be equal to half the total bridge length plus the length of the bridge approach slab.

Parapet concrete shall be paid for as Concrete Superstructure.

Approach slab shall be paid for as Concrete Superstructure (Approach Slab).

Approach footing concrete shall be paid for as Concrete Structures.

The approach footing maximum applied service bearing pressure (Qmax) = 2.0 ksf.

Cost of excavation for approach footing included with Concrete Structures.

For Granular Backfill for Structures and drainage treatment details, see sheet 2 of 42.

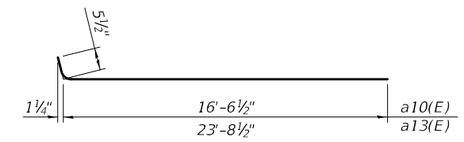

BARS a10(E) & a13(E)

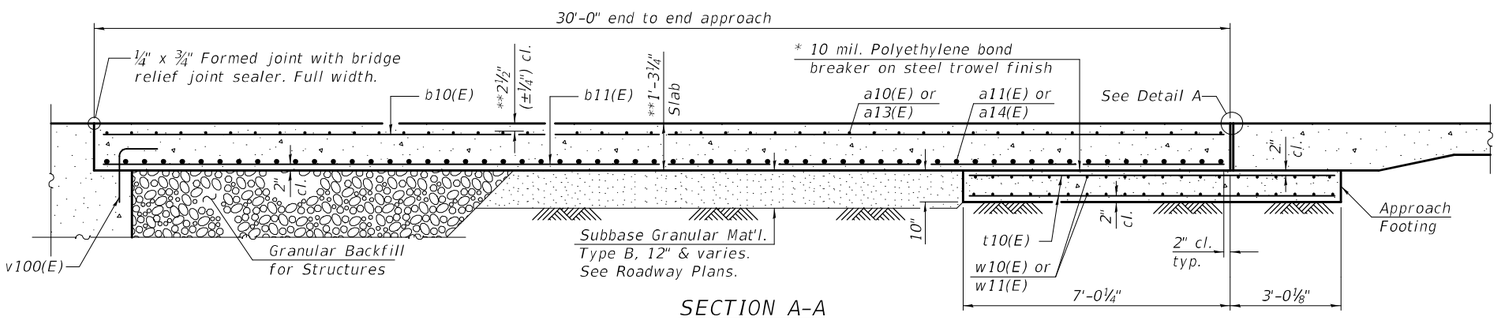

SECTION A-A

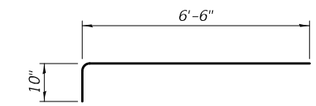

BAR a12(E)

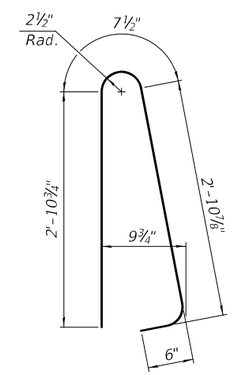

BAR d10(E)

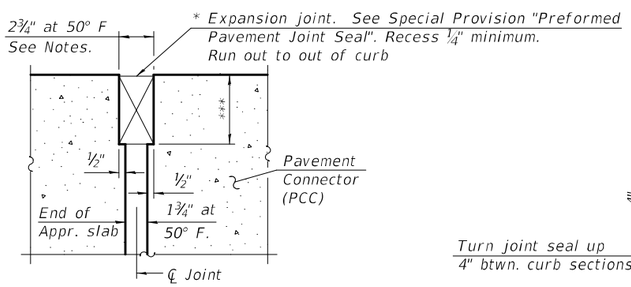

DETAIL A

(at Rt. ∠'s)

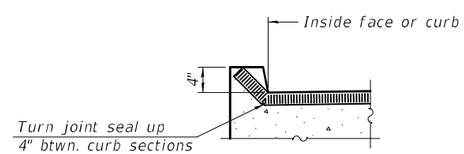

END OF SEAL

(At North approaches only)

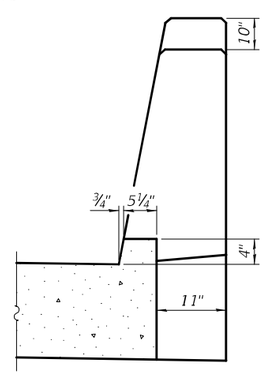

VIEW B-B

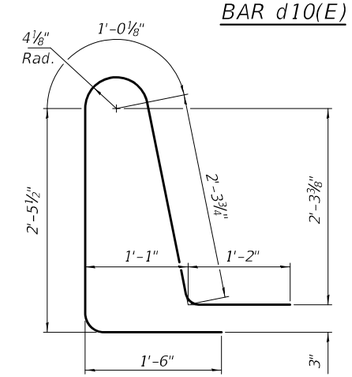

BAR d11(E)

FOUR APPROACHES
BILL OF MATERIAL

Bar	No.	Size	Length	Shape
a10(E)	184	#5	17'-0"	
a11(E)	240	#8	16'-8"	
a12(E)	184	#5	7'-4"	
a13(E)	184	#5	24'-2"	
a14(E)	240	#8	23'-10"	
b10(E)	252	#5	29'-8"	
b11(E)	396	#9	29'-8"	
b12(E)	32	#5	14'-9"	
b13(E)	8	#4	14'-8"	
d10(E)	184	#5	7'-0"	
d11(E)	184	#5	8'-6"	
e10(E)	96	#4	14'-8"	
t10(E)	344	#4	9'-8"	
w10(E)	160	#5	16'-8"	
w11(E)	160	#5	23'-10"	
Concrete Superstructure			Cu. Yd.	16.9
Concrete Superstructure (Approach Slab)			Cu. Yd.	239.4
Concrete Structures			Cu. Yd.	50.8
Reinforcement Bars, Epoxy Coated			Pound	96,470

* Cost included with Concrete Superstructure (Approach Slab).

** Prior to grinding.

*** Per manufacturer recommendations.

(Sheet 4 of 4)

MODEL: 0100198-70A87-026
FILE NAME: pw:\\ildot-pw.bentley.com:PWIDOT\Documents\IDOT Offices\Bureau of Bridges and Structures\Projects\0100198\CADD Plans\0100198_70A87.dgn
5/17/2023 2:01:01 PM

DESIGNED - RYAN P. NEGANGARD	EXAMINED	DATE - MAY 16, 2023	STATE OF ILLINOIS DEPARTMENT OF TRANSPORTATION
CHECKED - DAVID H. RICHTER	ENGINEER OF BRIDGE DESIGN		
DRAWN - DENNIS A. POP	PASSED	REVISED -	
CHECKED - R.P.N. / D.H.R. / G.R.A.	ENGINEER OF BRIDGES AND STRUCTURES	REVISED -	

BRIDGE APPROACH SLAB DETAILS
STRUCTURE NO. 010-0198 (NB) & 010-0199 (SB)

SHEET 26 OF 42 SHEETS

F.A.I. RTE.	SECTION	COUNTY	TOTAL SHEETS	SHEET NO.
57	(10-30)BR	CHAMPAIGN	107	65

CONTRACT NO. 70A87

ILLINOIS FED. AID PROJECT

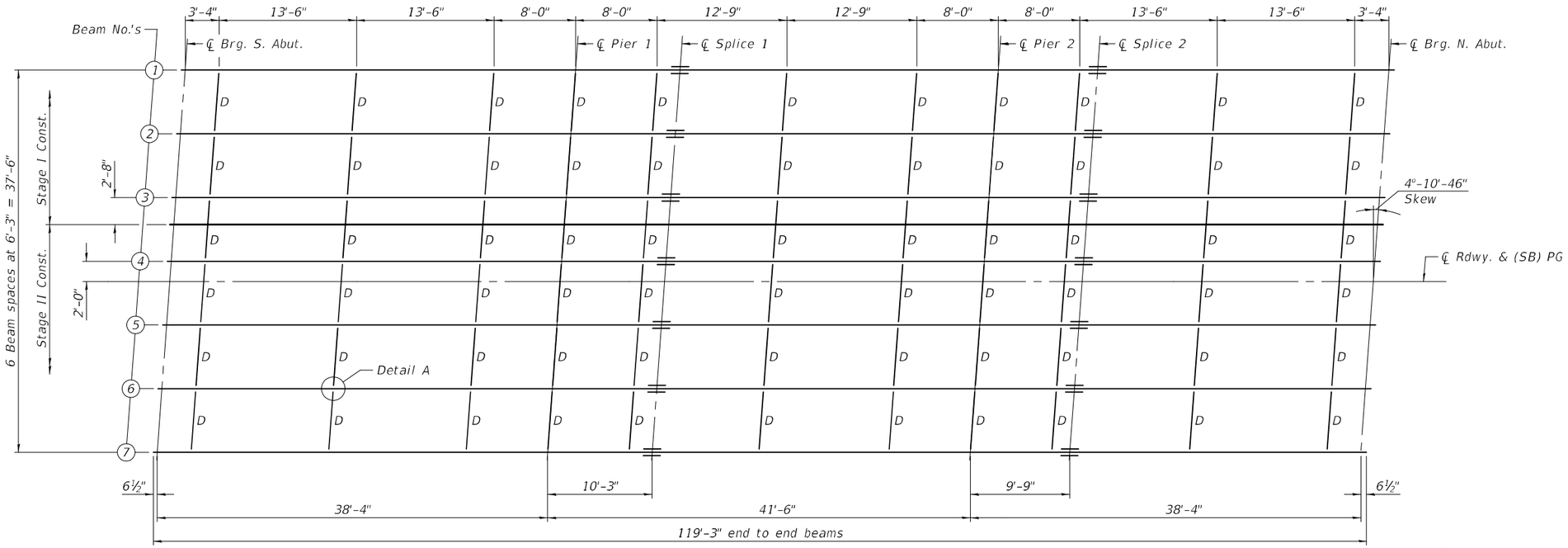

PLAN

(010-0199 Southbound)

Notes:
See sheets 28 and 29 of 42 for additional notes and details.

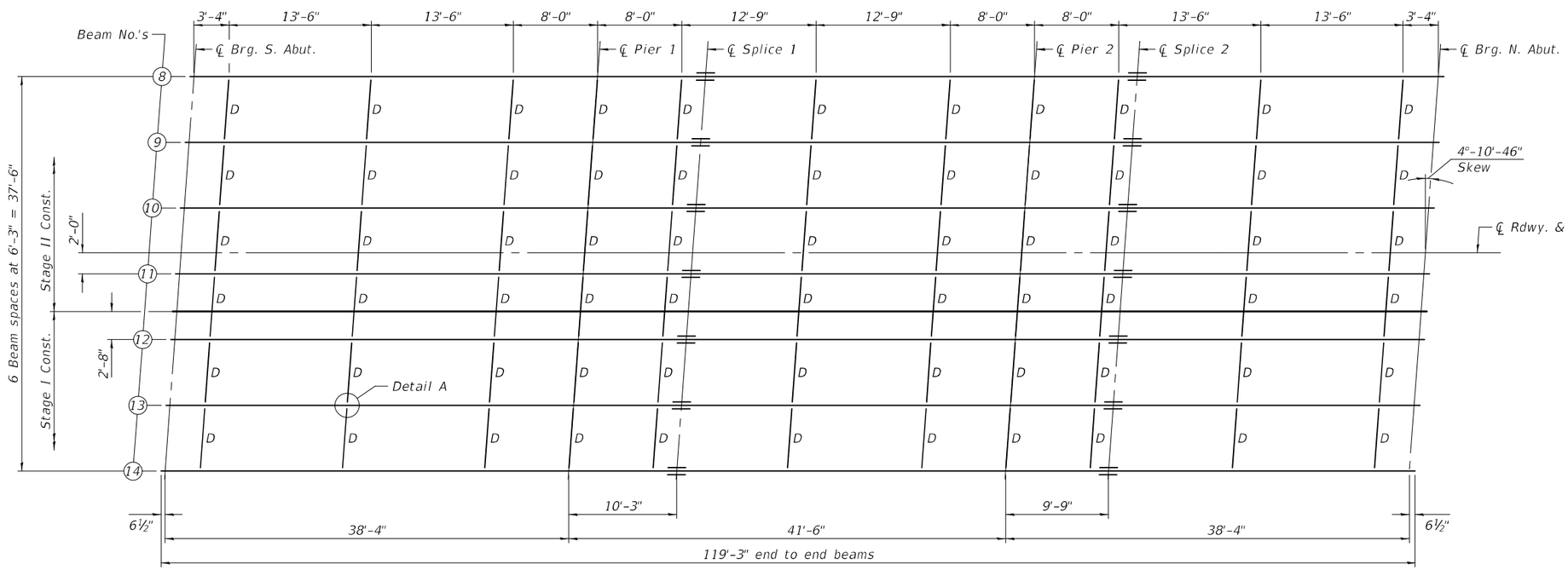

PLAN

(010-0198 Northbound)

DESIGNED - RYAN P. NEGANGARD	EXAMINED	ENGINEER OF BRIDGE DESIGN	DATE - MAY 16, 2023	STATE OF ILLINOIS DEPARTMENT OF TRANSPORTATION	STRUCTURAL STEEL DETAILS STRUCTURE NO. 010-0198 (NB) & 010-0199 (SB)	F.A.I. RTE.	SECTION	COUNTY	TOTAL SHEETS	SHEET NO.
CHECKED - DAVID H. RICHTER						57	(10-30)BR	CHAMPAIGN	107	66
DRAWN - DENNIS A. POP	PASSED	ENGINEER OF BRIDGES AND STRUCTURES	REVISED -					CONTRACT NO. 70A87		
CHECKED - R.P.N. / D.H.R. / G.R.A.			REVISED -		SHEET 27 OF 42 SHEETS			ILLINOIS	FED. AID PROJECT	

MODEL: 0100198-70A87-027
FILE NAME: pw:\\ildot-pw.bentley.com:PWIDOT\Documents\IDOT Offices\Bureau of Bridges and Structures\Projects\0100198\CADD Plans\0100198_70A87.dgn
5/17/2023 2:01:02 PM

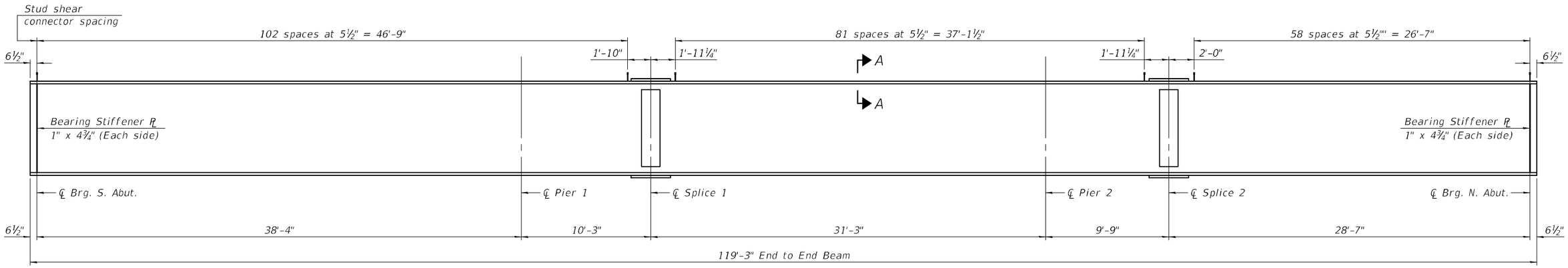

BEAM ELEVATION

(All beams are W27x84, AASHTO M270, Grade 50, CVN)

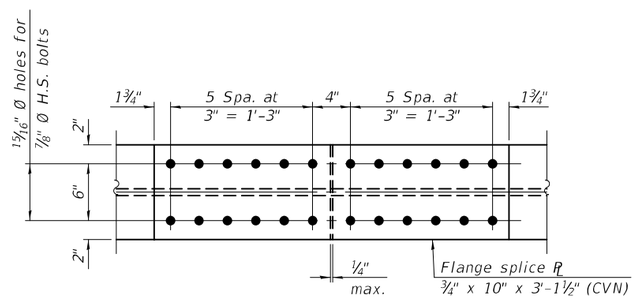

TOP and BOTTOM PLAN

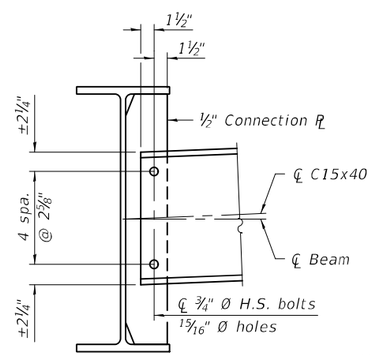

DIAPHRAGM D

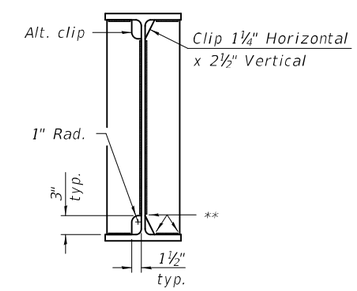

WELD LIMITS AND CLIP DETAILS

** Stop welds ¼" (±⅛") from edges as shown. Typical.

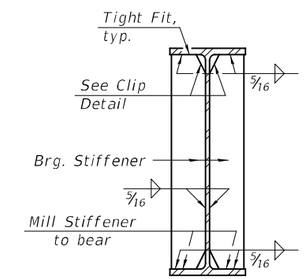

BEARING STIFFENER DETAIL

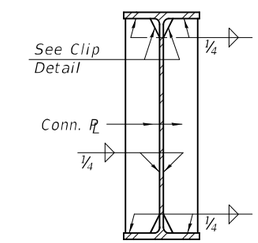

CONNECTION PLATE DETAIL

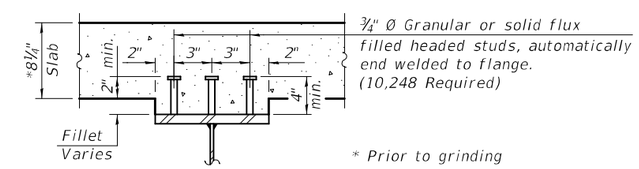

SECTION A-A

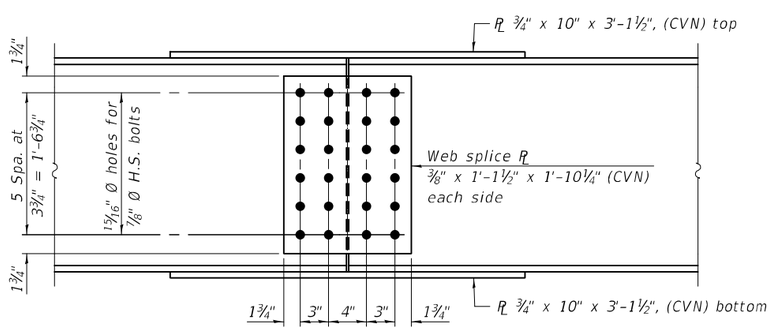

ELEVATION

SPLICE DETAILS

(28 Required)

Notes:

Two hardened washers required for each set of oversized holes.

All diaphragms shall be installed as steel is erected and secured with erection pins and bolts except as otherwise noted. Individual diaphragms at supports may be temporarily disconnected to install bearing anchor rods.

Load carrying components designated "CVN" shall conform to the Charpy-V-Notch Impact Energy Requirement, Zone 2.

Alternate channels of equal depth and larger weight are permitted to facilitate material acquisition. Alternate channels, if utilized, shall be provided at no additional cost to the Department.

All splice plates and bearing stiffeners shall be AASHTO M270, Grade 50.

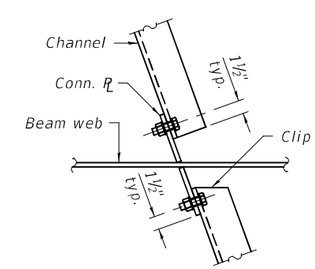

DETAIL A

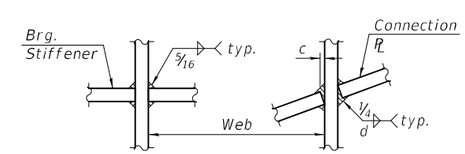

WEB WELD DETAIL

d = ¼ + c

DESIGNED - RYAN P. NEGANGARD	EXAMINED	ENGINEER OF BRIDGE DESIGN	DATE - MAY 16, 2023	STATE OF ILLINOIS DEPARTMENT OF TRANSPORTATION	STRUCTURAL STEEL DETAILS STRUCTURE NO. 010-0198 (NB) & 010-0199 (SB)
CHECKED - DAVID H. RICHTER					
DRAWN - DENNIS A. POP	PASSED	ENGINEER OF BRIDGES AND STRUCTURES	REVISED -		SHEET 28 OF 42 SHEETS
CHECKED - R.P.N. / D.H.R. / G.R.A.			REVISED -		

F.A.I. RTE.	SECTION	COUNTY	TOTAL SHEETS	SHEET NO.
57	(10-30)BR	CHAMPAIGN	107	67
		CONTRACT NO. 70A87		
		ILLINOIS	FED. AID PROJECT	

MODEL: 0100198-70A87-028
FILE NAME: pw:\\ildot-pw.bentley.com:PWIDOT\Documents\IDOT Offices\Bureau of Bridges and Structures\Projects\0100198\CADD Plans\0100198_70A87.dgn
5/17/2023 2:01:03 PM

*TOP OF BEAM ELEVATIONS - 010-0199 SOUTHBOUND

Location	℄ Bearing S. Abut.	℄ Bearing Pier 1	℄ Splice 1	℄ Bearing Pier 2	℄ Splice 2	℄ Bearing N. Abut.
Beam 1	727.63	727.17	727.04	726.67	726.56	726.24
Beam 2	727.76	727.30	727.17	726.80	726.69	726.38
Beam 3	727.87	727.41	727.28	726.91	726.80	726.49
Beam 4	727.97	727.51	727.38	727.01	726.90	726.59
Beam 5	727.94	727.48	727.35	726.98	726.87	726.56
Beam 6	727.85	727.39	727.26	726.90	726.79	726.47
Beam 7	727.74	727.28	727.15	726.78	726.67	726.36

*TOP OF BEAM ELEVATIONS - 010-0198 NORTHBOUND

Location	℄ Bearing S. Abut.	℄ Bearing Pier 1	℄ Splice 1	℄ Bearing Pier 2	℄ Splice 2	℄ Bearing N. Abut.
Beam 8	727.78	727.32	727.20	726.83	726.72	726.41
Beam 9	727.90	727.44	727.32	726.96	726.85	726.54
Beam 10	728.00	727.54	727.42	727.06	726.95	726.64
Beam 11	728.04	727.58	727.46	727.10	726.99	726.68
Beam 12	727.95	727.49	727.37	727.01	726.90	726.59
Beam 13	727.85	727.39	727.27	726.91	726.80	726.49
Beam 14	727.73	727.27	727.15	726.79	726.68	726.37

* For fabrication use only.

INTERIOR BEAM MOMENT TABLE				
		0.4 Span 1 or 0.6 Span 3	Pier 1 or Pier 2	0.5 Span 2
I_s	(in^4)	2850	2850	2850
$I_c(n)$	(in^4)	9365	9365	9365
$I_c(3n)$	(in^4)	7151	7151	7151
$I_c(cr)$	(in^4)	-	4457	-
S_s	(in^3)	213	213	213
$S_c(n)$	(in^3)	346	346	346
$S_c(3n)$	(in^3)	315	315	315
$S_c(cr)$	(in^3)	-	261	-
DC1	(k/')	0.775	0.775	0.775
M_{DC1}	('k)	87.4	123.1	43.8
DC2	(k/')	0.190	0.190	0.190
M_{DC2}	('k)	21.4	30.2	10.7
DW	(k/')	0.313	0.313	0.313
M_{DW}	('k)	35.3	49.7	17.7
LLDF		0.560	0.554	0.548
M_{LL+IM}	('k)	313.6	248.5	271.2
M_u (Strength I)	('k)	737.8	701.1	569.3
$\phi_f M_n$	('k)	1731	1330	1731
f_s DC1	(ksi)	4.92	6.94	2.47
f_s DC2	(ksi)	0.82	1.15	0.41
f_s DW	(ksi)	1.34	1.89	0.67
f_s (LL+IM)	(ksi)	10.88	8.62	9.41
f_s (Service II)	(ksi)	21.22	21.18	15.78
$0.95R_hF_{yf}$	(ksi)	47.50	47.50	47.50
f_s (Total)(Strength I)	(ksi)	28.22	33.83	21.07
$\phi_f F_n$	(ksi)	-	-	-
V_f	(k)	40.8	45.9	41.3

BEAM REACTION TABLE					
		Interior		Exterior	
		Abut.	Piers	Abut.	Piers
LLDF		0.689	0.689	0.528	0.528
OCF		1.020	-	1.020	-
R_{DC1}	(k)	39.8	34.1	39.1	32.1
R_{DC2}	(k)	5.4	8.4	5.4	8.4
R_{DW}	(k)	9.1	13.8	8.7	12.6
R_{LL}	(k)	47.9	66.5	37.6	50.9
R_{IM}	(k)	11.8	15.0	9.1	11.5
R_{TOTAL}	(k)	114.0	137.8	99.9	115.5

Abutment reactions include dead load and live load from approach slab and concrete diaphragm.

I_s, S_s : Non-composite moment of inertia and section modulus of the steel section used for computing f_s(Total-Strength I, and Service II) due to non-composite dead loads (in.4 and in.^{3}).

$I_c(n)$, $S_c(n)$: Composite moment of inertia and section modulus of the steel and deck based upon the modular ratio, "n", used for computing f_s(Total-Strength I, and Service II) in uncracked sections due to short-term composite live loads (in.4 and in.^{3}).

$I_c(3n)$, $S_c(3n)$: Composite moment of inertia and section modulus of the steel and deck based upon 3 times the modular ratio, "3n", used for computing f_s(Total-Strength I, and Service II) in uncracked sections, due to long-term composite (superimposed) dead loads (in.4 and in.^{3}).

$I_c(cr)$, $S_c(cr)$: Composite moment of inertia and section modulus of the steel and longitudinal deck reinforcement, used for computing f_s (Total-Strength I and Service II) in cracked sections, due to both short-term composite live loads and long-term composite (superimposed) dead loads (in.4 and in.^{3}).

DC1: Un-factored non-composite dead load (kips/ft.).

M_{DC1} : Un-factored moment due to non-composite dead load (kip-ft.).

DC2: Un-factored long-term composite (superimposed excluding future wearing surface) dead load (kips/ft.).

M_{DC2} : Un-factored moment due to long-term composite (superimposed excluding future wearing surface) dead load (kip-ft.).

DW: Un-factored long-term composite (superimposed future wearing surface only) dead load (kips/ft.).

M_{DW} : Un-factored moment due to long-term composite (superimposed future wearing surface only) dead load (kip-ft.).

LLDF: Live Load Distribution Factor for moment and shear computed according to Article 4.6.2.2 and further IDOT provisions.

M_{LL+IM}: Un-factored live load moment plus dynamic load allowance (impact) (kip-ft.).

M_u (Strength I): Factored design moment (kip-ft.).
$1.25\ (M_{DC1} + M_{DC2}) + 1.5\ M_{DW} + 1.75\ M_{LL+IM}$

$\phi_f M_n$: Compact composite positive moment capacity computed according to Article 6.10.7.1 or non-slender negative moment capacity according to Article A6.1.1 or A6.1.2 (kip-ft).

f_s DC1: Un-factored stress at edge of flange for controlling steel flange due to vertical non-composite dead loads as calculated below (ksi).
M_{DC1} / S_{nc}

f_s DC2: Un-factored stress at edge of flange for controlling steel flange due to vertical composite dead loads as calculated below (ksi).
M_{DC2} / $S_c(3n)$ or M_{DC2} / $S_c(cr)$ as applicable.

f_s DW: Un-factored stress at edge of flange for controlling steel flange due to vertical composite future wearing surface loads as calculated below (ksi).
M_{DW} / $S_c(3n)$ or M_{DW} / $S_c(cr)$ as applicable.

f_s (LL + IM): Un-factored stress at edge of flange for controlling steel flange due to vertical composite live load plus impact loads as calculated below (ksi).
M_{LL+IM} / $S_c(n)$ or M_{LL+IM} / $S_c(cr)$ as applicable.

f_s (Service II): Sum of stresses as computed below (ksi).
$f_s DC1 + f_s DC2 + f_s DW + 1.3\ f_s(LL + IM)$

$0.95R_hF_{yf}$: Composite stress capacity for Service II loading according to Article 6.10.4.2 (ksi).

f_s (Total)(Strength I): Sum of stresses as computed below on non-compact section (ksi).
$1.25\ (f_s DC1 + f_s DC2) + 1.5\ f_s DW + 1.75\ f_s(LL + IM)$

$\phi_f F_n$: Non-Compact composite positive or negative stress capacity for Strength I loading according to Article 6.10.7 or 6.10.8 (ksi).

V_f : Maximum factored shear range in span computed according to Article 6.10.10.

OCF: Obtuse Correction Factor applied to non-continuous exterior beam ends and computed according to Article 4.6.2.2.3c-1 or as further simplified by IDOT provisions.

R_{DC1} : Un-factored reaction due to non-composite dead load (kip).

R_{DC2} : Un-factored reaction due to long-term composite (superimposed excluding future wearing surface) dead load (kip).

R_{DW} : Un-factored reaction due to long-term composite (superimposed future wearing surface only) dead load (kip).

R_{LL} : Un-factored live load reaction (kip).

R_{IM} : Un-factored dynamic load allowance (impact) (kip).

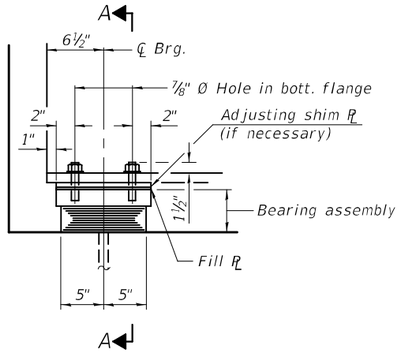

ELEVATION AT ABUT.

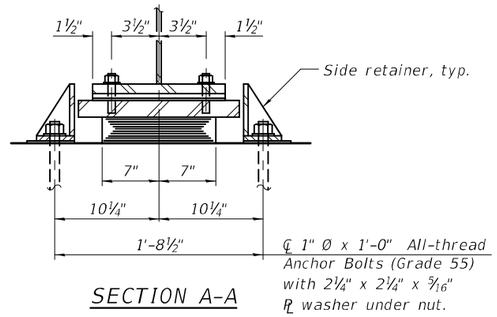

SECTION A-A

TYPE I ELASTOMERIC EXP. BRG.

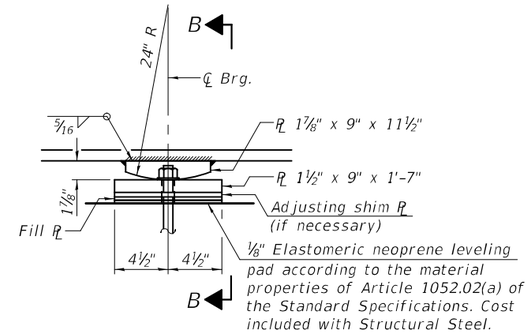

ELEVATION AT PIER

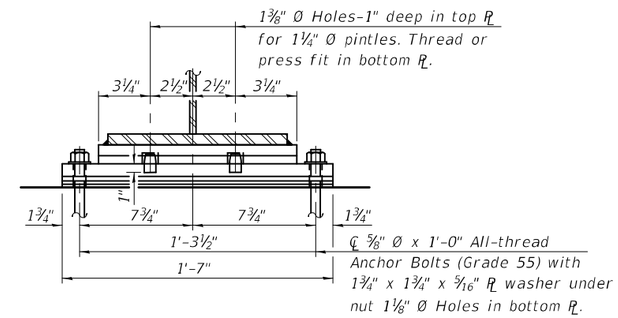

SECTION B-B

FIXED BEARING
(28 Required)

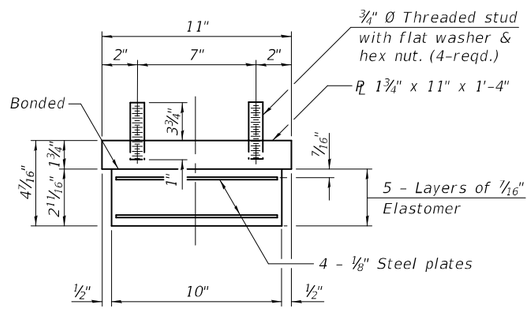

BEARING ASSEMBLY

Note:
Shim plates shall not be placed under bearing assembly.

Notes:
Side retainers and stainless steel plates shall be included in the cost of Elastomeric Bearing Assembly, Type I.
Anchor bolts and side retainers at all supports shall be installed as each member is erected unless an equivalent temporary means of lateral restraint is used.
Two ⅛ in. adjusting shims shall be provided for each bearing in addition to all other plates or shims and placed as shown on bearing details.
All bearing plates, shim and fill plates, side retainers, anchor bolts, nuts, washers and pintles shall be galvanized according to AASHTO M111 or M232 as applicable.
All bearing plates, pintles and structural steel plates of the Bearing Assembly shall conform to the requirements of AASHTO M270, Grade 50.

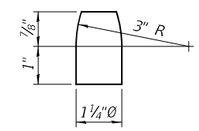

PINTLE

FILL PLATE THICKNESS TABLE

Location	Beam 4	Beam 10
S. Abut.	⅜"	1¼"
Pier 1	⅜"	1⅛"
Pier 2	⅜"	1¼"
N. Abut.	⅜"	1¼"

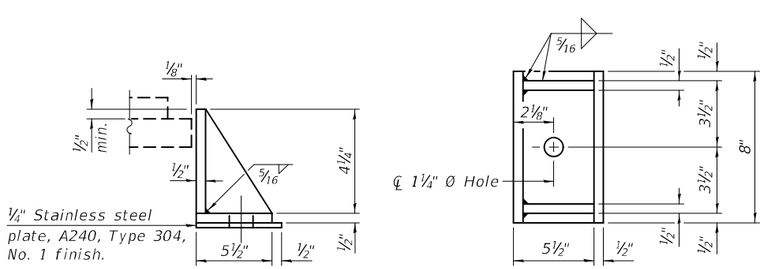

SIDE RETAINER
Equivalent rolled angle with stiffeners will be allowed in lieu of welded plates.

BILL OF MATERIAL

Item	Unit	Total
Elastomeric Bearing Assembly, Type I	Each	28
Anchor Bolts, ⅝"	Each	56
Anchor Bolts, 1"	Each	56

MODEL: 0100198-70A87-030
FILE NAME: pw:\\ildot-pw.bentley.com:PWIDOT\Documents\IDOT Offices\Bureau of Bridges and Structures\Projects\0100198\CADD Plans\0100198_70A87.dgn
5/17/2023 2:01:06 PM

DESIGNED - RYAN P. NEGANGARD	EXAMINED	DATE - MAY 16, 2023	STATE OF ILLINOIS DEPARTMENT OF TRANSPORTATION
CHECKED - DAVID H. RICHTER	ENGINEER OF BRIDGE DESIGN		
DRAWN - DENNIS A. POP	PASSED	REVISED -	
CHECKED - R.P.N. / D.H.R. / G.R.A.	ENGINEER OF BRIDGES AND STRUCTURES	REVISED -	

BEARING DETAILS
STRUCTURE NO. 010-0198 (NB) & 010-0199 (SB)
SHEET 30 OF 42 SHEETS

F.A.I. RTE.	SECTION	COUNTY	TOTAL SHEETS	SHEET NO.
57	(10-30)BR	CHAMPAIGN	107	69

CONTRACT NO. 70A87
ILLINOIS FED. AID PROJECT

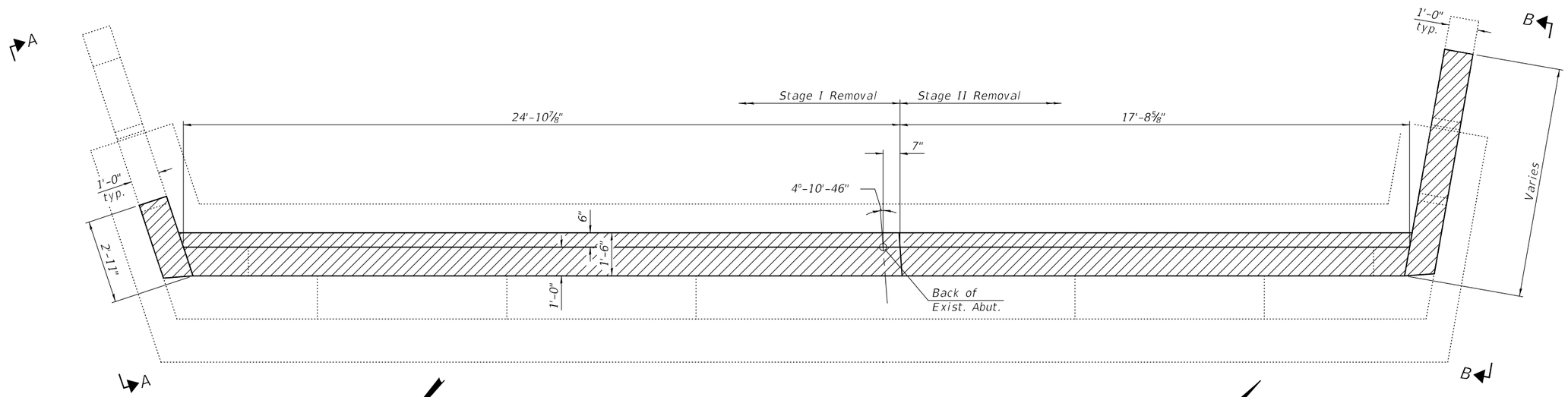

ABUTMENT PLAN

South Abutment 010-0198 (NB) and North Abutment 010-0199 (SB)

South Abutment 010-0198 (NB)

North Abutment 010-0199 (SB)

Note:
Hatched areas indicate Concrete Removal.

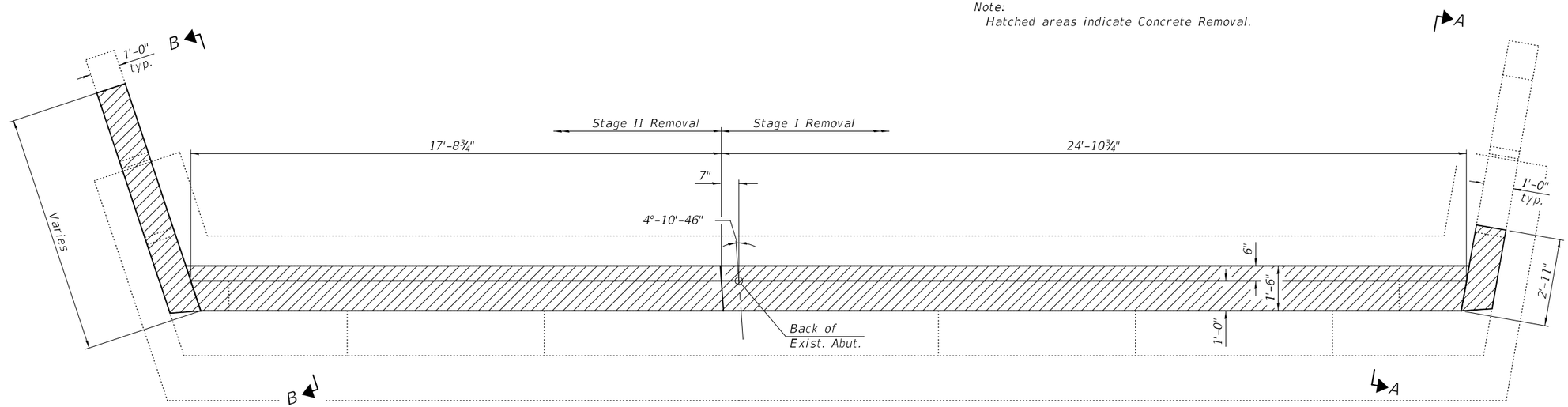

ABUTMENT PLAN

North Abutment 010-0198 (NB) and South Abutment 010-0199 (SB)

North Abutment 010-0198 (NB)

South Abutment 010-0199 (SB)

MODEL: 0100198-70A87-031
FILE NAME: pw:\\ildot-pw.bentley.com:PWIDOT\Documents\IDOT Offices\Bureau of Bridges and Structures\Projects\0100198\CADD Plans\0100198_70A87.dgn

DESIGNED - RYAN P. NEGANGARD	EXAMINED	ENGINEER OF BRIDGE DESIGN	DATE - MAY 16, 2023	STATE OF ILLINOIS DEPARTMENT OF TRANSPORTATION	CONCRETE REMOVAL STRUCTURE NO. 010-0198 (NB) & 010-0199 (SB)	F.A.I. RTE.	SECTION	COUNTY	TOTAL SHEETS	SHEET NO.
CHECKED - DAVID H. RICHTER						57	(10-30)BR	CHAMPAIGN	107	70
DRAWN - DENNIS A. POP	PASSED	ENGINEER OF BRIDGES AND STRUCTURES	REVISED -					CONTRACT NO. 70A87		
CHECKED - R.P.N. / D.H.R. / G.R.A.			REVISED -		SHEET 31 OF 42 SHEETS		ILLINOIS	FED. AID PROJECT		

5/17/2023 2:01:07 PM

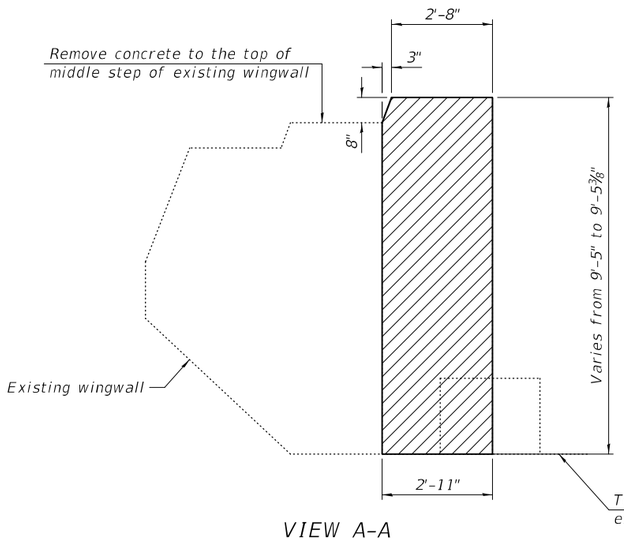

VIEW A-A
(Exterior wingwalls)

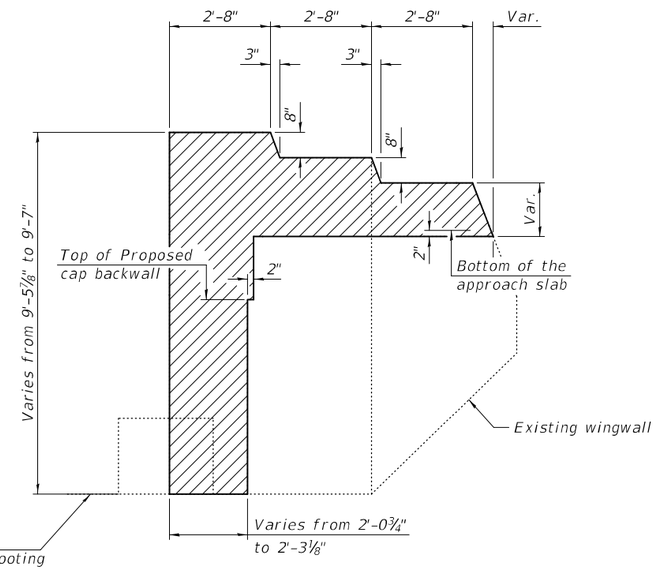

VIEW B-B
(Median-side wingwalls)

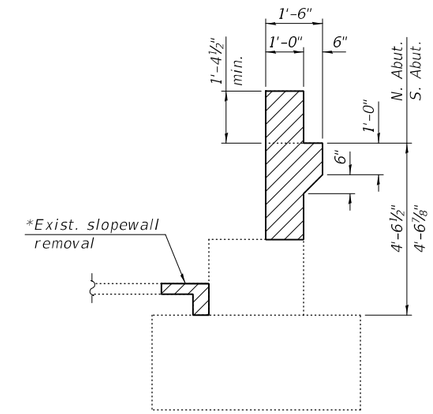

ABUTMENT REMOVAL

* Limits of existing slopewall removal to be determined in the field to facilitate placement of proposed cap. Cost included with Concrete Removal.

Notes:
Hatched areas indicate Concrete Removal.
Existing vertical wingwall reinforcement shall be cut off flush and covered with a 2" layer of cement grout. Cost included with Concrete Removal.

010-0198 (NB)
BILL OF MATERIAL - 2 ABUTMENTS

Item	Unit	Total
Concrete Removal	Cu. Yd.	18.7

010-0199 (SB)
BILL OF MATERIAL - 2 ABUTMENTS

Item	Unit	Total
Concrete Removal	Cu. Yd.	18.7

MODEL: 0100198-70A87-032
FILE NAME: pw:\\ildot-pw.bentley.com:PWIDOT\Documents\IDOT Offices\Bureau of Bridges and Structures\Projects\0100198\CADD Plans\0100198_70A87.dgn
5/17/2023 2:01:08 PM

DESIGNED -	RYAN P. NEGANGARD	EXAMINED	ENGINEER OF BRIDGE DESIGN
CHECKED -	DAVID H. RICHTER		
DRAWN -	DENNIS A. POP	PASSED	ENGINEER OF BRIDGES AND STRUCTURES
CHECKED -	R.P.N. / D.H.R. / G.R.A.		

DATE - MAY 16, 2023
REVISED -
REVISED -

STATE OF ILLINOIS
DEPARTMENT OF TRANSPORTATION

CONCRETE REMOVAL
STRUCTURE NO. 010-0198 (NB) & 010-0199 (SB)

SHEET 32 OF 42 SHEETS

F.A.I. RTE.	SECTION	COUNTY	TOTAL SHEETS	SHEET NO.
57	(10-30)BR	CHAMPAIGN	107	71

CONTRACT NO. 70A87
ILLINOIS FED. AID PROJECT

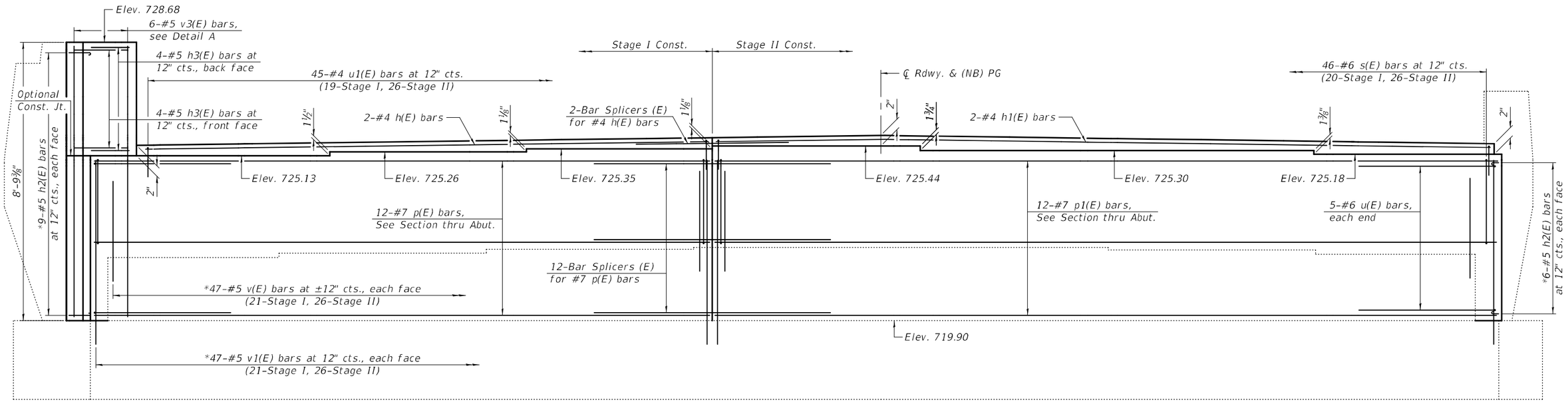

ELEVATION

(South abutment, looking South)

* Epoxy grout bars in 9" min. drilled holes according to Section 584 of the Standard Specifications. Cost included with Reinforcement Bars, Epoxy Coated, typ.

Note:
See sheet 37 of 42 for additional details, notes and Bill of Material.

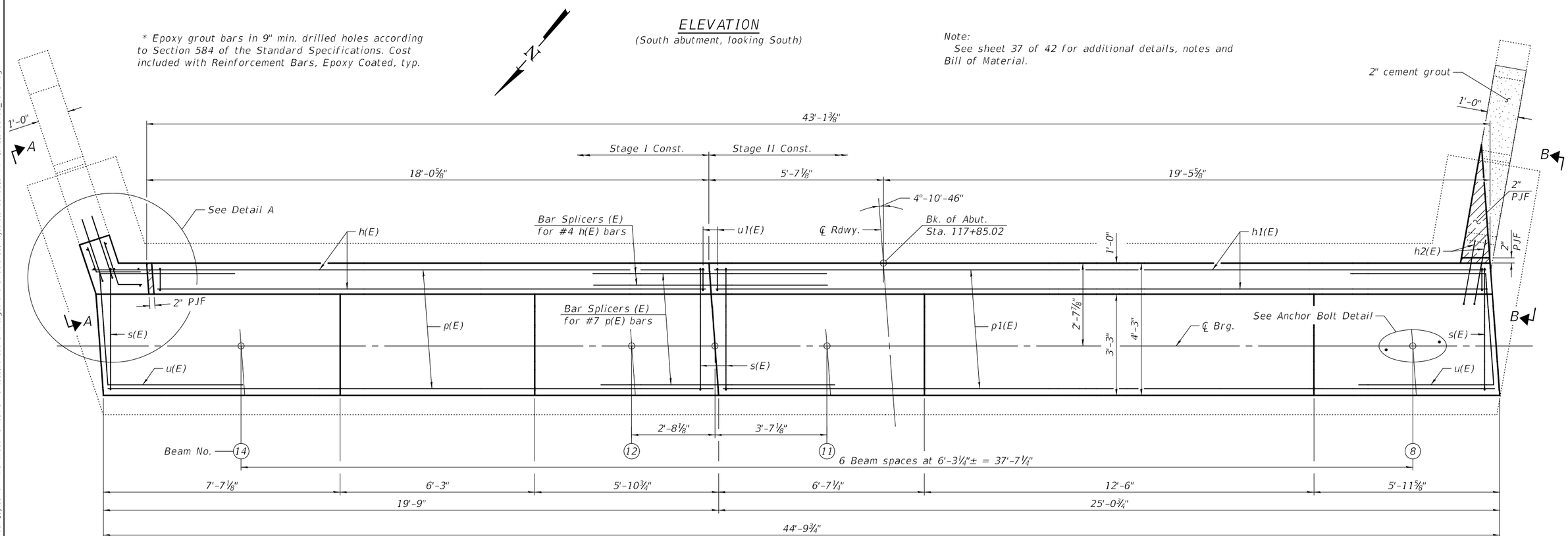

PLAN

DESIGNED -	RYAN P. NEGANGARD	EXAMINED	ENGINEER OF BRIDGE DESIGN
CHECKED -	DAVID H. RICHTER	PASSED	ENGINEER OF BRIDGES AND STRUCTURES
DRAWN -	DENNIS A. POP	DATE -	MAY 16, 2023
CHECKED -	R.P.N. / D.H.R. / G.R.A.	REVISED -	
		REVISED -	

STATE OF ILLINOIS
DEPARTMENT OF TRANSPORTATION

SOUTH ABUTMENT
STRUCTURE NO. 010-0198 (NB)

SHEET 33 OF 42 SHEETS

F.A.I. RTE.	SECTION	COUNTY	TOTAL SHEETS	SHEET NO.
57	(10-30)BR	CHAMPAIGN	107	72
		CONTRACT NO. 70A87		
		ILLINOIS	FED. AID PROJECT	

MODEL: 0100198-70A87-033
FILE NAME: pw:\\ildot-pw.bentley.com:PWIDOT\Documents\IDOT Offices\Bureau of Bridges and Structures\Projects\0100198\CADD Plans\0100198_70A87.dgn
5/17/2023 2:01:09 PM

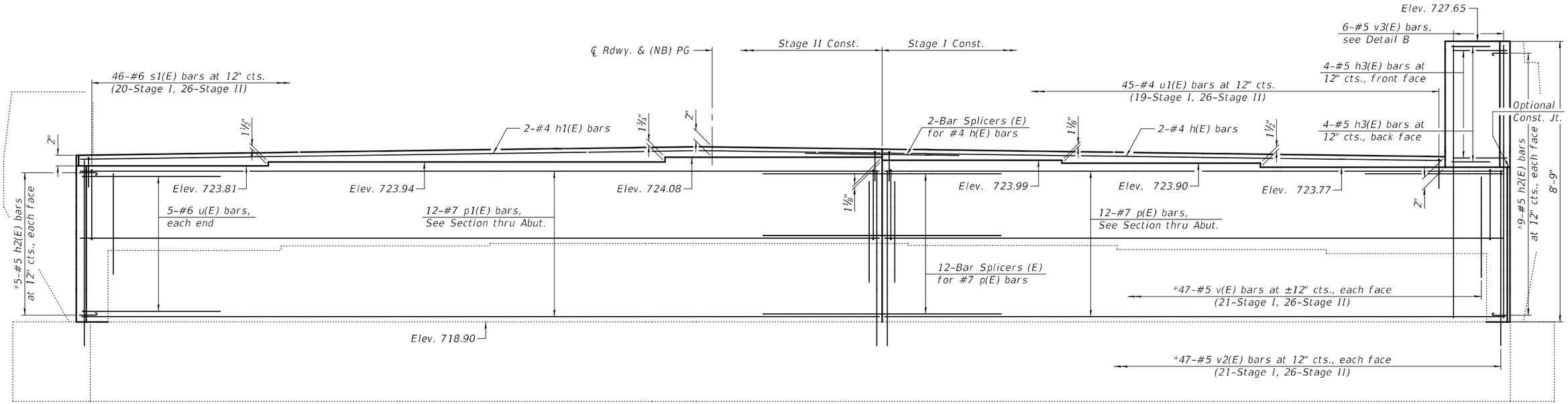

ELEVATION

(North abutment, looking North)

* Epoxy grout bars in 9" min. drilled holes according to Section 584 of the Standard Specifications. Cost included with Reinforcement Bars, Epoxy Coated, typ.

Note:
See sheet 37 of 42 for additional details, notes and Bill of Material.

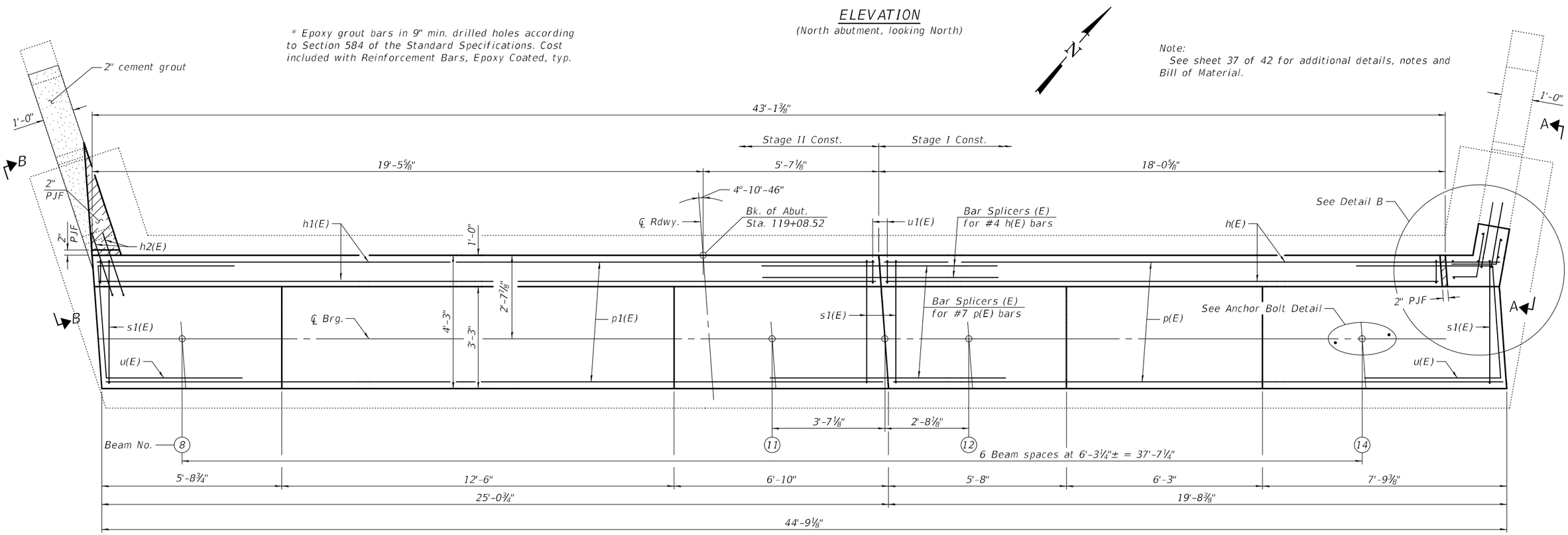

PLAN

DESIGNED - RYAN P. NEGANGARD	EXAMINED	DATE - MAY 16, 2023	STATE OF ILLINOIS DEPARTMENT OF TRANSPORTATION
CHECKED - DAVID H. RICHTER	ENGINEER OF BRIDGE DESIGN		
DRAWN - DENNIS A. POP	PASSED	REVISED -	
CHECKED - R.P.N. / D.H.R. / G.R.A.	ENGINEER OF BRIDGES AND STRUCTURES	REVISED -	

NORTH ABUTMENT
STRUCTURE NO. 010-0198 (NB)
SHEET 34 OF 42 SHEETS

F.A.I. RTE.	SECTION	COUNTY	TOTAL SHEETS	SHEET NO.
57	(10-30)BR	CHAMPAIGN	107	73
		CONTRACT NO. 70A87		
		ILLINOIS FED. AID PROJECT		

MODEL: 0100198-70A87-034
FILE NAME: pw:\\ildot-pw.bentley.com:PWIDOT\Documents\IDOT Offices\Bureau of Bridges and Structures\Projects\0100198\CADD Plans\0100198_70A87.dgn
5/17/2023 2:01:10 PM

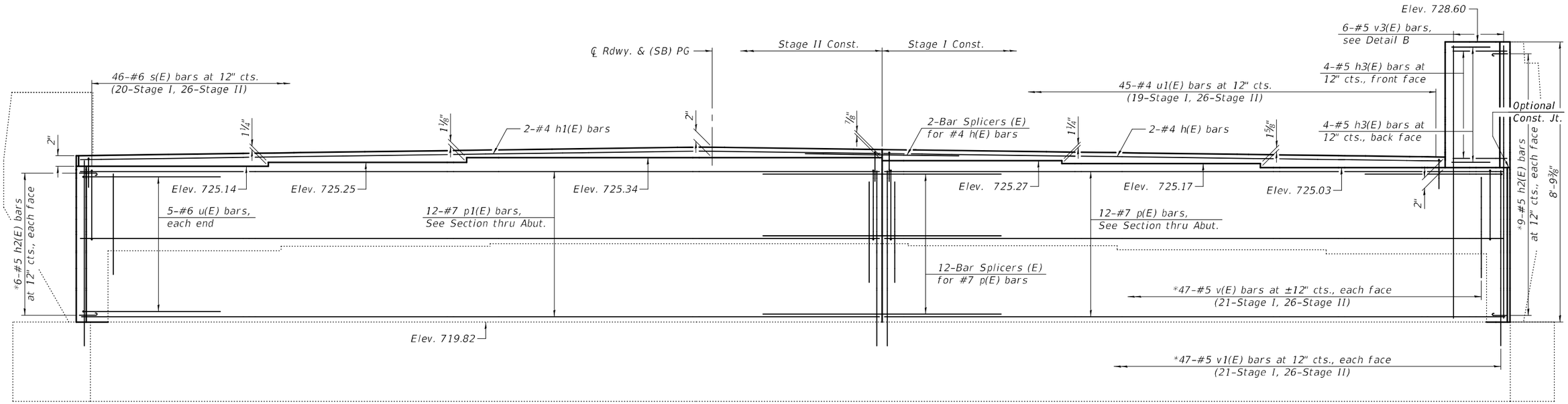

ELEVATION

(South abutment, looking South)

* Epoxy grout bars in 9" min. drilled holes according to Section 584 of the Standard Specifications. Cost included with Reinforcement Bars, Epoxy Coated, typ.

Note:
See sheet 37 of 42 for additional details, notes and Bill of Material.

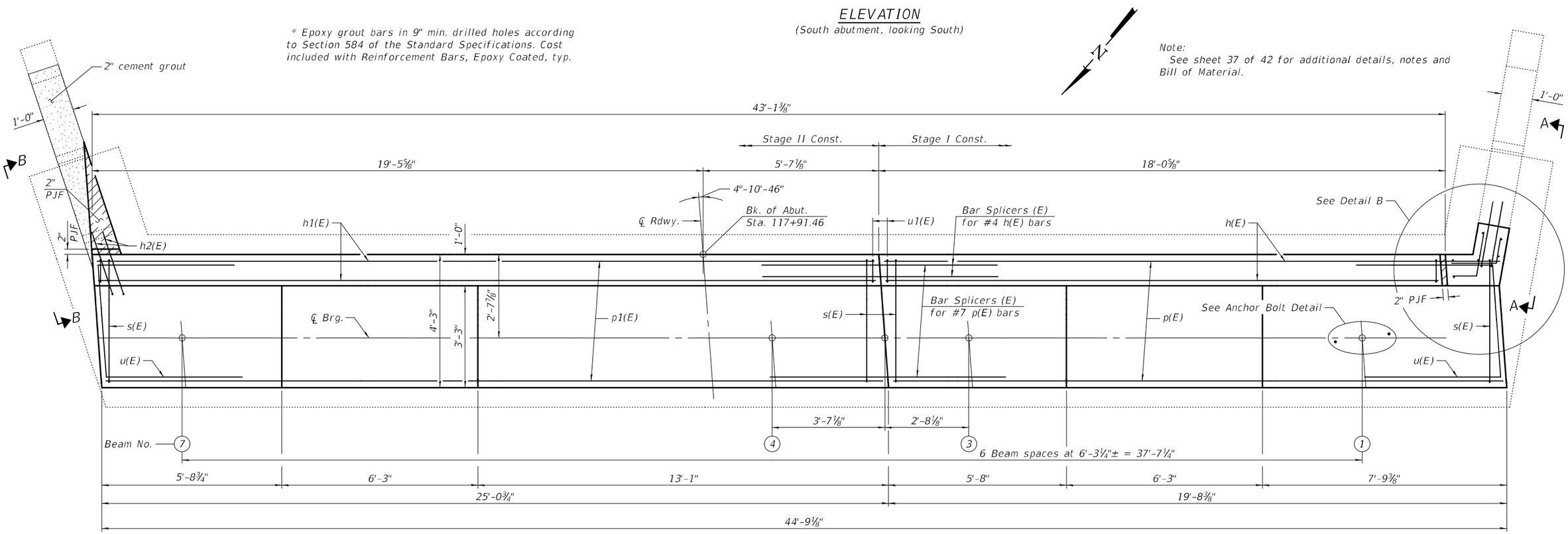

PLAN

DESIGNED - RYAN P. NEGANGARD	EXAMINED	DATE - MAY 16, 2023	
CHECKED - DAVID H. RICHTER	ENGINEER OF BRIDGE DESIGN		
DRAWN - DENNIS A. POP	PASSED	REVISED -	
CHECKED - R.P.N. / D.H.R. / G.R.A.	ENGINEER OF BRIDGES AND STRUCTURES	REVISED -	

STATE OF ILLINOIS
DEPARTMENT OF TRANSPORTATION

SOUTH ABUTMENT
STRUCTURE NO. 010-0199 (SB)

SHEET 35 OF 42 SHEETS

F.A.I. RTE.	SECTION	COUNTY	TOTAL SHEETS	SHEET NO.
57	(10-30)BR	CHAMPAIGN	107	74

CONTRACT NO. 70A87

ILLINOIS | FED. AID PROJECT

MODEL: 0100198-70A87-035
FILE NAME: pw:\\ildot-pw.bentley.com:PWIDOT\Documents\IDOT Offices\Bureau of Bridges and Structures\Projects\0100198\CADD Plans\0100198_70A87.dgn
5/17/2023 2:01:11 PM

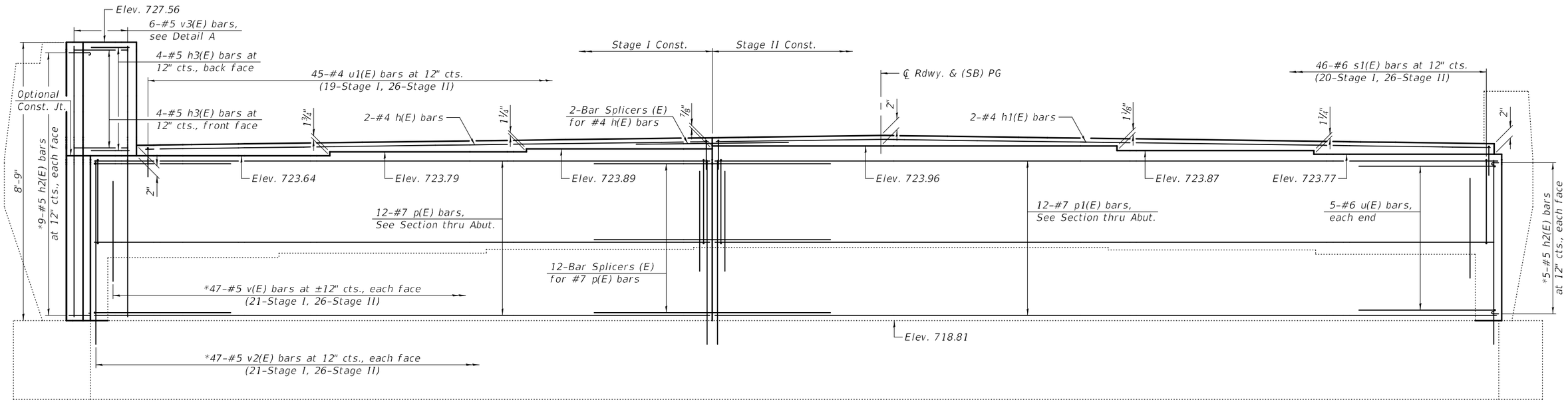

ELEVATION

(North abutment, looking North)

* Epoxy grout bars in 9" min. drilled holes according to Section 584 of the Standard Specifications. Cost included with Reinforcement Bars, Epoxy Coated, typ.

Note:
See sheet 37 of 42 for additional details, notes and Bill of Material.

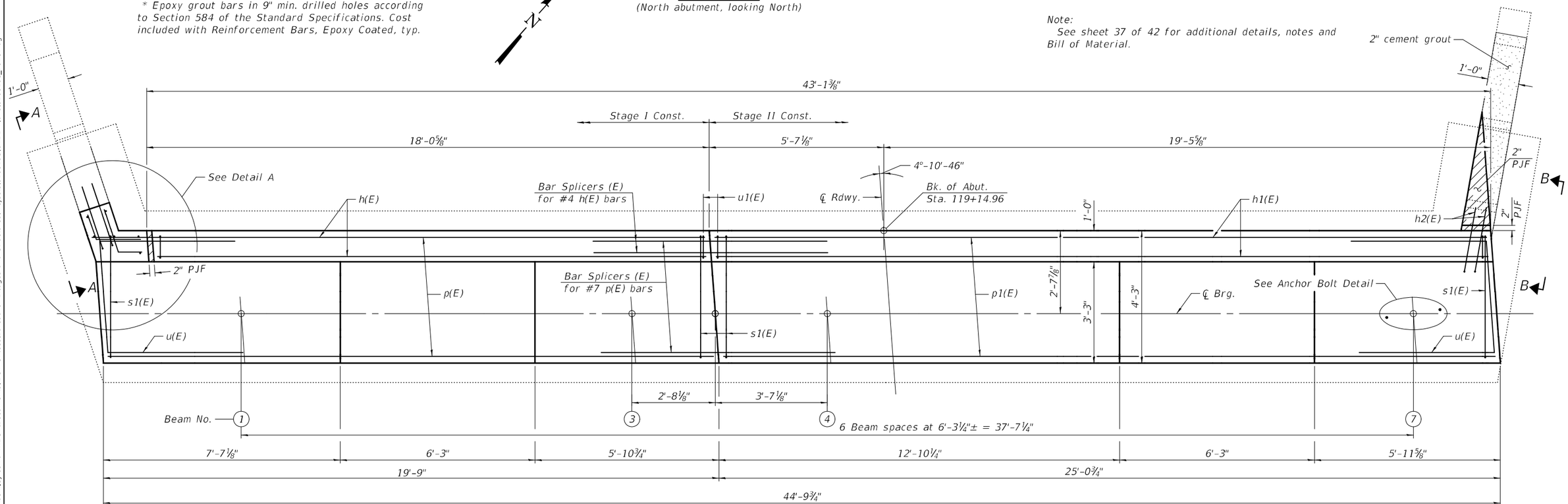

PLAN

DESIGNED - RYAN P. NEGANGARD	EXAMINED	DATE - MAY 16, 2023	STATE OF ILLINOIS DEPARTMENT OF TRANSPORTATION
CHECKED - DAVID H. RICHTER	ENGINEER OF BRIDGE DESIGN		
DRAWN - DENNIS A. POP	PASSED	REVISED -	
CHECKED - R.P.N. / D.H.R. / G.R.A.	ENGINEER OF BRIDGES AND STRUCTURES	REVISED -	

NORTH ABUTMENT
STRUCTURE NO. 010-0199 (SB)

SHEET 36 OF 42 SHEETS

F.A.I. RTE.	SECTION	COUNTY	TOTAL SHEETS	SHEET NO.
57	(10-30)BR	CHAMPAIGN	107	75
		CONTRACT NO. 70A87		
		ILLINOIS	FED. AID PROJECT	

MODEL: 0100198-70A87-036
FILE NAME: pw:\\ildot-pw.bentley.com:PWIDOT-Documents\IDOT Offices\Bureau of Bridges and Structures\Projects\0100198\CADD Plans\0100199_70A87.dgn
5/17/2023 2:01:13 PM

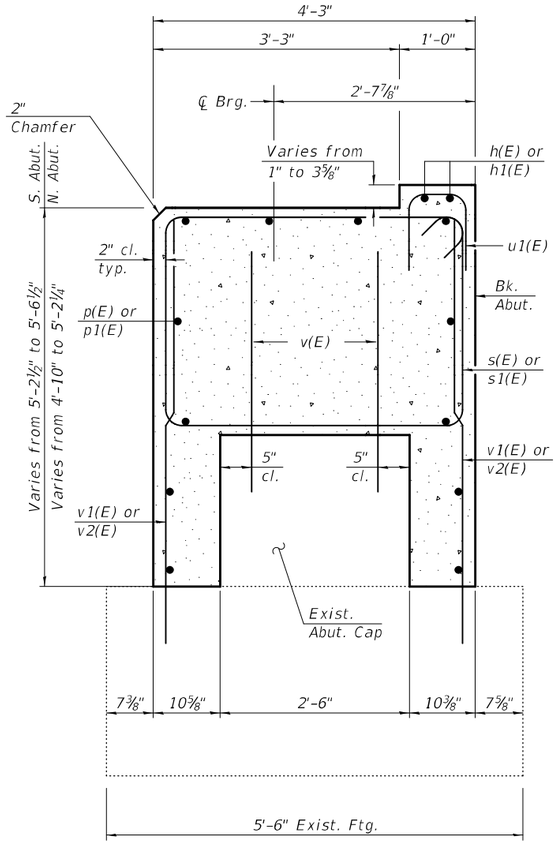

SEC. THRU ABUT.

Dimensions at right angles to abutment.

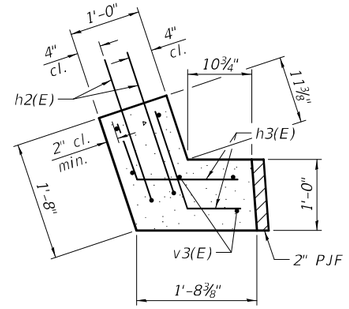

DETAIL A

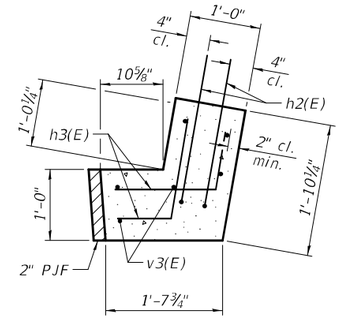

DETAIL B

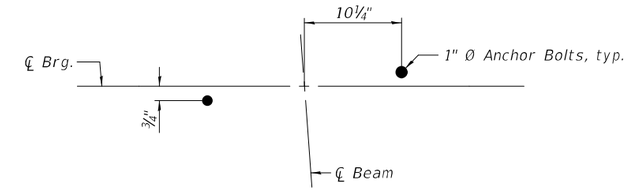

ANCHOR BOLT DETAIL

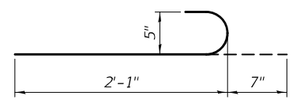

BAR h2(E)

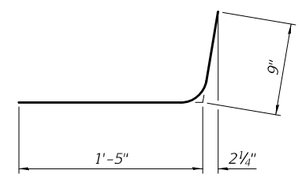

BAR h3(E)

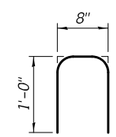

BAR u1(E)

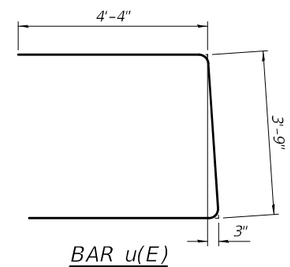

BAR u(E)

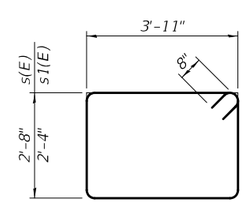

BARS s(E) & s1(E)

Notes:
Pour steps monolithically with cap.
Space reinforcement in cap to miss anchor bolts.
A portion of the existing abutment cap may be removed to facilitate placement of h2(E) bars.

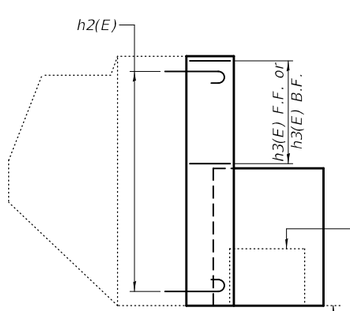

VIEW A-A

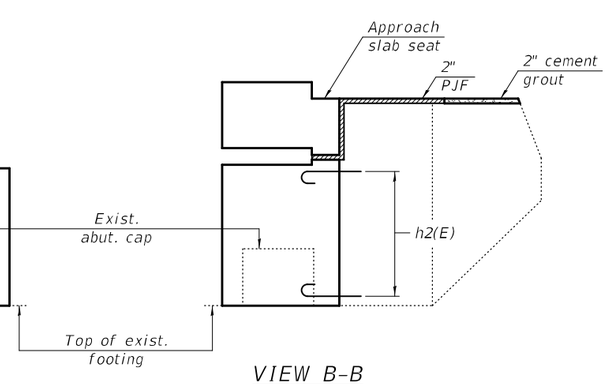

VIEW B-B

010-0198 (NB) SOUTH ABUTMENT BILL OF MATERIAL

Bar	No.	Size	Length	Shape
h(E)	2	#4	17'-9"	
h1(E)	2	#4	24'-9"	
h2(E)	30	#5	2'-8"	
h3(E)	8	#5	2'-2"	
p(E)	12	#7	19'-5"	
p1(E)	12	#7	24'-9"	
s(E)	46	#6	14'-6"	
u(E)	10	#6	12'-5"	
u1(E)	45	#4	2'-8"	
v(E)	94	#5	3'-2"	
v1(E)	94	#5	5'-10"	
v3(E)	6	#5	8'-6"	
Structure Excavation			Cu. Yd.	123
Concrete Structures			Cu. Yd.	30.1
Reinforcement Bars, Epoxy Coated			Pound	3,450

010-0198 (NB) NORTH ABUTMENT BILL OF MATERIAL

Bar	No.	Size	Length	Shape
h(E)	2	#4	17'-9"	
h1(E)	2	#4	24'-9"	
h2(E)	28	#5	2'-8"	
h3(E)	8	#5	2'-2"	
p(E)	12	#7	19'-5"	
p1(E)	12	#7	24'-9"	
s1(E)	46	#6	13'-10"	
u(E)	10	#6	12'-5"	
u1(E)	45	#4	2'-8"	
v(E)	94	#5	3'-2"	
v2(E)	94	#5	5'-6"	
v3(E)	6	#5	8'-6"	
Structure Excavation			Cu. Yd.	115
Concrete Structures			Cu. Yd.	27.0
Reinforcement Bars, Epoxy Coated			Pound	3,360

010-0199 (SB) SOUTH ABUTMENT BILL OF MATERIAL

Bar	No.	Size	Length	Shape
h(E)	2	#4	17'-9"	
h1(E)	2	#4	24'-9"	
h2(E)	30	#5	2'-8"	
h3(E)	8	#5	2'-2"	
p(E)	12	#7	19'-5"	
p1(E)	12	#7	24'-9"	
s(E)	46	#6	14'-6"	
u(E)	10	#6	12'-5"	
u1(E)	45	#4	2'-8"	
v(E)	94	#5	3'-2"	
v1(E)	94	#5	5'-10"	
v3(E)	6	#5	8'-6"	
Structure Excavation			Cu. Yd.	124
Concrete Structures			Cu. Yd.	30.1
Reinforcement Bars, Epoxy Coated			Pound	3,450

010-0199 (SB) NORTH ABUTMENT BILL OF MATERIAL

Bar	No.	Size	Length	Shape
h(E)	2	#4	17'-9"	
h1(E)	2	#4	24'-9"	
h2(E)	28	#5	2'-8"	
h3(E)	8	#5	2'-2"	
p(E)	12	#7	19'-5"	
p1(E)	12	#7	24'-9"	
s1(E)	46	#6	13'-10"	
u(E)	10	#6	12'-5"	
u1(E)	45	#4	2'-8"	
v(E)	94	#5	3'-2"	
v2(E)	94	#5	5'-6"	
v3(E)	6	#5	8'-6"	
Structure Excavation			Cu. Yd.	115
Concrete Structures			Cu. Yd.	27.5
Reinforcement Bars, Epoxy Coated			Pound	3,360

MODEL: 0100198-70A87-037
FILE NAME: pw:\\ildot-pw.bentley.com:PWIDOT\Documents\IDOT Offices\Bureau of Bridges and Structures\Projects\0100198\CADD Plans\0100198_70A87.dgn
5/17/2023 2:01:14 PM

DESIGNED -	RYAN P. NEGANGARD	EXAMINED	ENGINEER OF BRIDGE DESIGN
CHECKED -	DAVID H. RICHTER	PASSED	ENGINEER OF BRIDGES AND STRUCTURES
DRAWN -	DENNIS A. POP	DATE -	MAY 16, 2023
CHECKED -	R.P.N. / D.H.R. / G.R.A.	REVISED -	
		REVISED -	

STATE OF ILLINOIS
DEPARTMENT OF TRANSPORTATION

ABUTMENT DETAILS
STRUCTURE NO. 010-0198 (NB) & 010-0199 (SB)

SHEET 37 OF 42 SHEETS

F.A.I. RTE.	SECTION	COUNTY	TOTAL SHEETS	SHEET NO.
57	(10-30)BR	CHAMPAIGN	107	76

CONTRACT NO. 70A87

ILLINOIS | FED. AID PROJECT

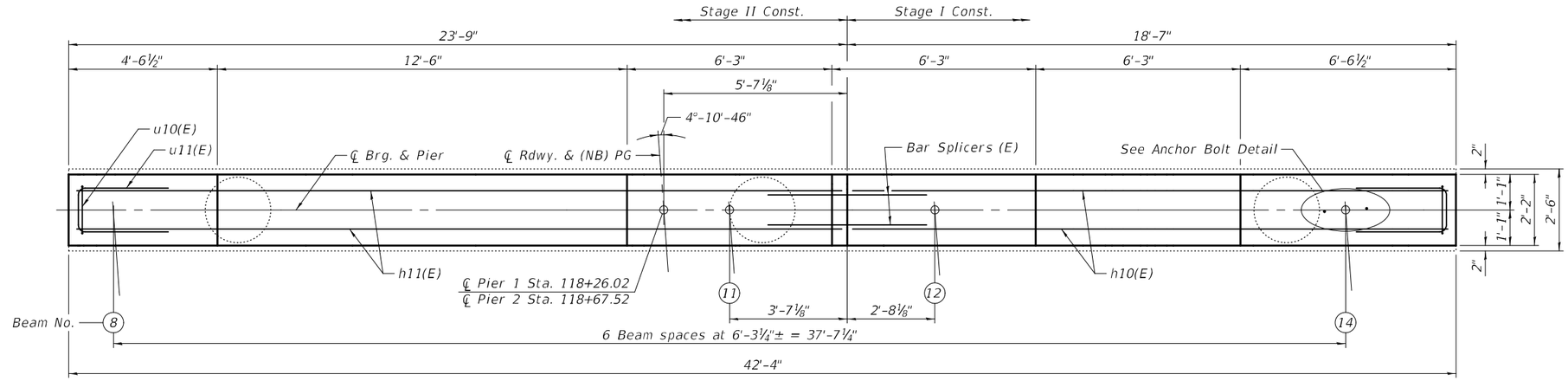

PLAN

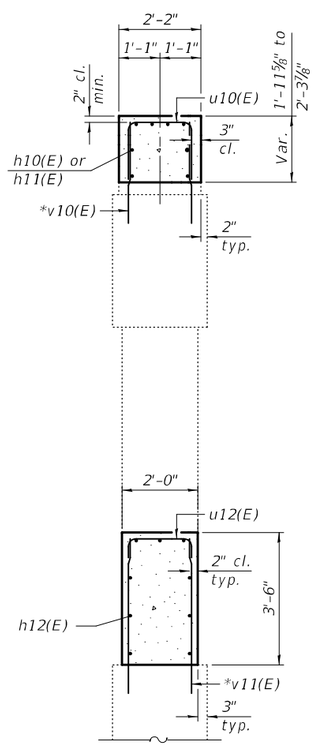

SECTION A-A

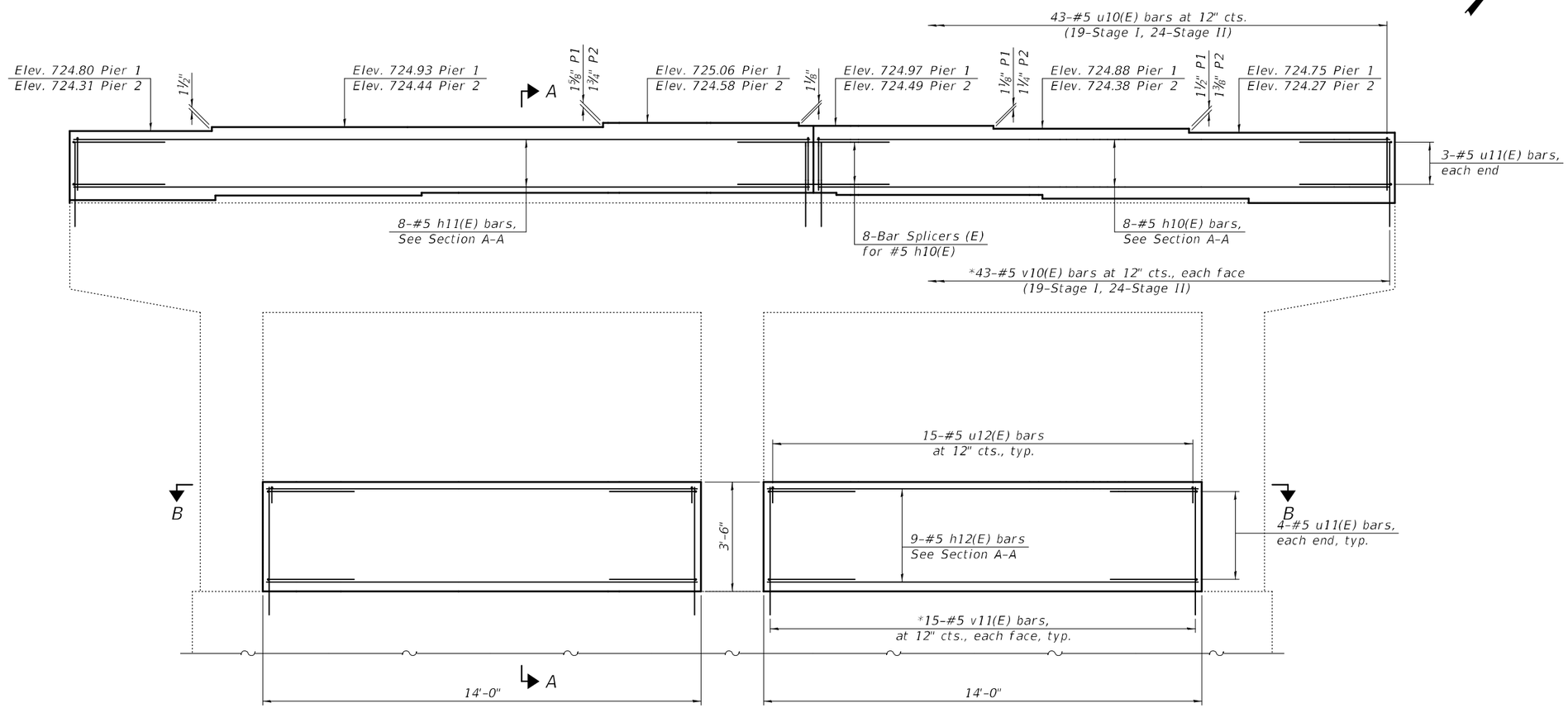

ELEVATION

(Looking North)

* Epoxy grout bars in 9" min. drilled holes according to Section 584 of the Standard Specifications. Cost included with Reinforcement Bars, Epoxy Coated, typ.

Note:
See sheet 40 of 42 for additional details, notes and Bill of Material.

DESIGNED - RYAN P. NEGANGARD	EXAMINED	ENGINEER OF BRIDGE DESIGN	DATE - MAY 16, 2023	STATE OF ILLINOIS DEPARTMENT OF TRANSPORTATION	PIERS STRUCTURE NO. 010-0198 (NB)	F.A.I. RTE.	SECTION	COUNTY	TOTAL SHEETS / SHEET NO.
CHECKED - DAVID H. RICHTER						57	(10-30)BR	CHAMPAIGN	107 / 77
DRAWN - DENNIS A. POP	PASSED	ENGINEER OF BRIDGES AND STRUCTURES	REVISED -		SHEET 38 OF 42 SHEETS			CONTRACT NO. 70A87	
CHECKED - R.P.N. / D.H.R. / G.R.A.			REVISED -				ILLINOIS	FED. AID PROJECT	

MODEL: 0100198-70A87-038
FILE NAME: pw:\\ildot-pw.bentley.com:PWIDOT\Documents\IDOT Offices\Bureau of Bridges and Structures\Projects\0100198\CADD Plans\0100198_70A87.dgn
5/17/2023 2:01:15 PM

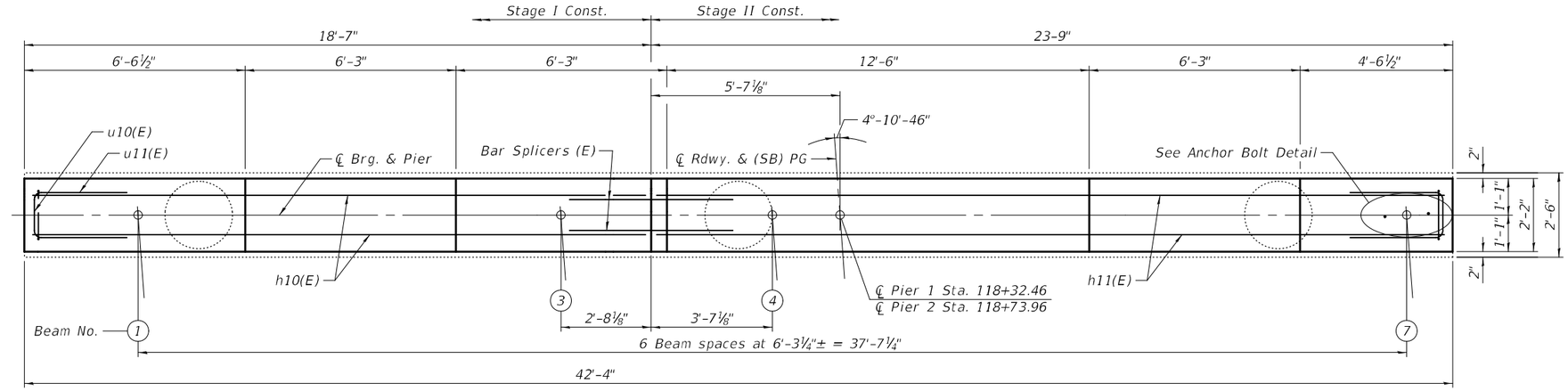

PLAN

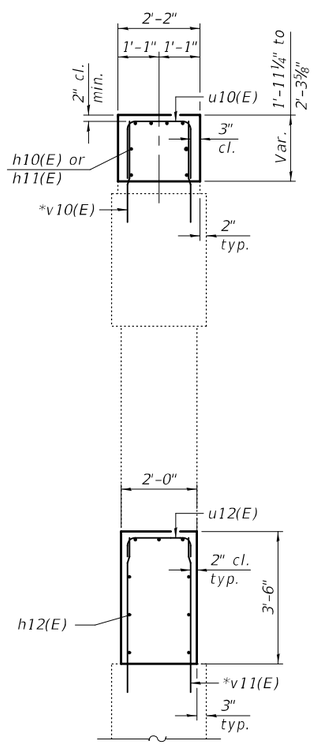

SECTION A-A

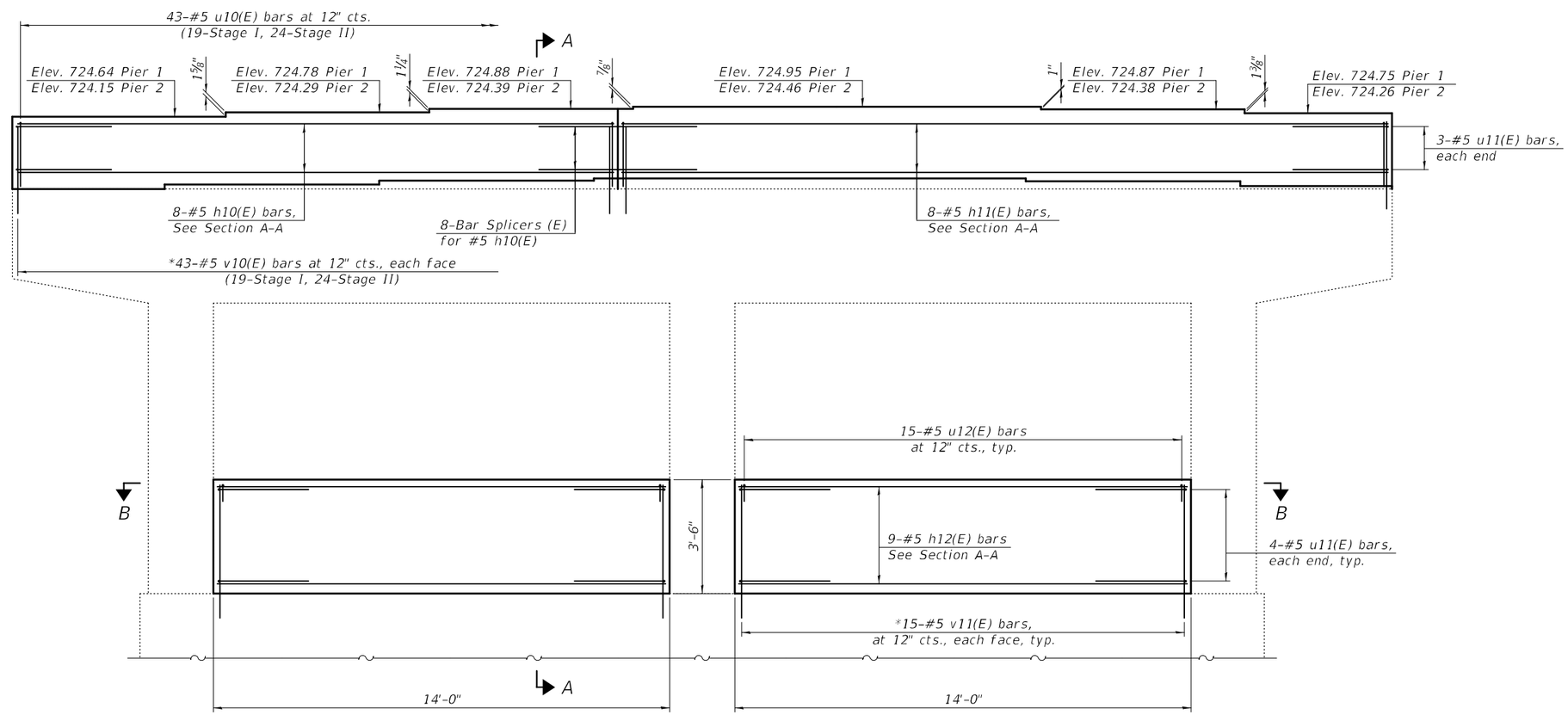

ELEVATION

(Looking North)

* Epoxy grout bars in 9" min. drilled holes according to Section 584 of the Standard Specifications. Cost included with Reinforcement Bars, Epoxy Coated, typ.

Note:
See sheet 40 of 42 for additional details, notes and Bill of Material.

DESIGNED - RYAN P. NEGANGARD	EXAMINED	ENGINEER OF BRIDGE DESIGN	DATE - MAY 16, 2023
CHECKED - DAVID H. RICHTER			
DRAWN - DENNIS A. POP	PASSED	ENGINEER OF BRIDGES AND STRUCTURES	REVISED -
CHECKED - R.P.N. / D.H.R. / G.R.A.			REVISED -

STATE OF ILLINOIS
DEPARTMENT OF TRANSPORTATION

PIERS
STRUCTURE NO. 010-0199 (SB)

SHEET 39 OF 42 SHEETS

F.A.I. RTE.	SECTION	COUNTY	TOTAL SHEETS	SHEET NO.
57	(10-30)BR	CHAMPAIGN	107	78

CONTRACT NO. 70A87

ILLINOIS | FED. AID PROJECT

MODEL: 0100198-70A87-039
FILE NAME: pw:\\ildo-pw.bentley.com:PWIDOT\Documents\IDOT Offices\Bureau of Bridges and Structures\Projects\0100198\CADD Plans\0100198_70A87.dgn
5/17/2023 2:01:16 PM

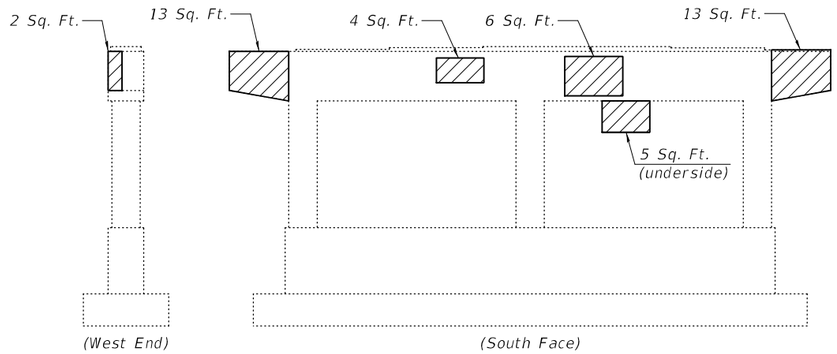

010-0198 (NB) PIER 1

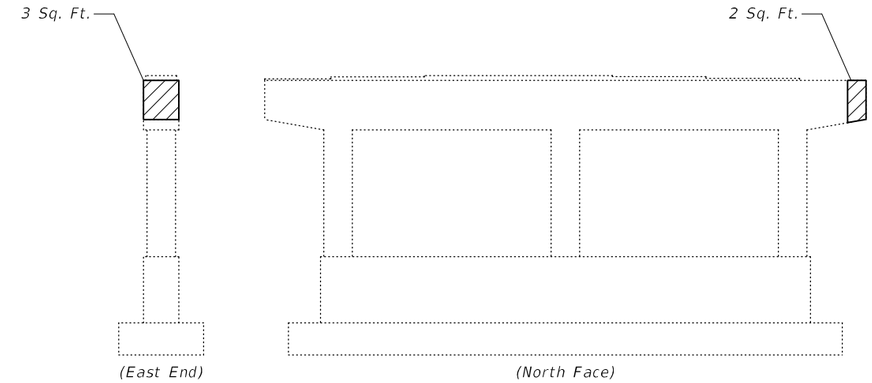

010-0198 (NB) PIER 1

Notes:
Hatched area indicates area of Structural Repair of Concrete (Depth Equal to or Less Than 5 Inches).
Pour steps monolithically with steps.
Space reinforcement in cap to miss anchor bolts.
Concrete sealer shall be applied to the top and inside faces of the new concrete pier crashwalls.

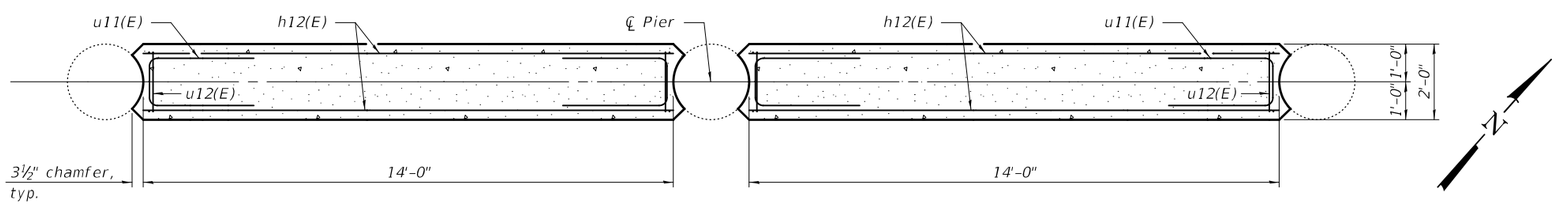

SECTION B-B

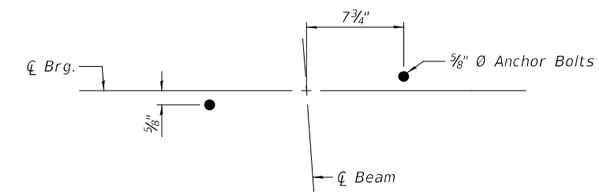

ANCHOR BOLT DETAIL

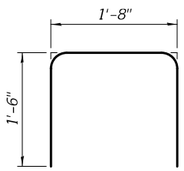

BARS u10(E)

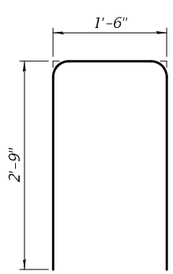

BARS u11(E)

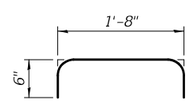

BARS u12(E)

010-0198 (NB) PIER 1
BILL OF MATERIAL

Bar	No.	Size	Length	Shape
h10(E)	8	#5	18'-3"	
h11(E)	8	#5	23'-6"	
h12(E)	18	#5	14'-0"	
u10(E)	43	#5	4'-8"	
u11(E)	22	#5	7'-0"	
u12(E)	30	#5	2'-8"	
v10(E)	86	#5	2'-8"	
v11(E)	60	#5	4'-1"	
Concrete Structures			Cu. Yd.	14.8
Reinforcement Bars, Epoxy Coated			Pound	1,560
Structural Repair of Concrete (Depth Equal to or Less Than 5 Inches)			Sq. Ft.	48
Concrete Sealer			Sq. Ft.	161

010-0198 (NB) PIER 2
BILL OF MATERIAL

Bar	No.	Size	Length	Shape
h10(E)	8	#5	18'-3"	
h11(E)	8	#5	23'-6"	
h12(E)	18	#5	14'-0"	
u10(E)	43	#5	4'-8"	
u11(E)	22	#5	7'-0"	
u12(E)	30	#5	2'-8"	
v10(E)	86	#5	2'-8"	
v11(E)	60	#5	4'-1"	
Concrete Structures			Cu. Yd.	14.4
Reinforcement Bars, Epoxy Coated			Pound	1,560
Concrete Sealer			Sq. Ft.	161

010-0199 (SB) Pier 1
BILL OF MATERIAL

Bar	No.	Size	Length	Shape
h10(E)	8	#5	18'-3"	
h11(E)	8	#5	23'-6"	
h12(E)	18	#5	14'-0"	
u10(E)	43	#5	4'-8"	
u11(E)	22	#5	7'-0"	
u12(E)	30	#5	2'-8"	
v10(E)	86	#5	2'-8"	
v11(E)	60	#5	4'-1"	
Concrete Structures			Cu. Yd.	14.8
Reinforcement Bars, Epoxy Coated			Pound	1,560
Concrete Sealer			Sq. Ft.	161

010-0199 (SB) Pier2
BILL OF MATERIAL

Bar	No.	Size	Length	Shape
h10(E)	8	#5	18'-3"	
h11(E)	8	#5	23'-6"	
h12(E)	18	#5	14'-0"	
u10(E)	43	#5	4'-8"	
u11(E)	22	#5	7'-0"	
u12(E)	30	#5	2'-8"	
v10(E)	86	#5	2'-8"	
v11(E)	60	#5	4'-1"	
Concrete Structures			Cu. Yd.	14.3
Reinforcement Bars, Epoxy Coated			Pound	1,560
Concrete Sealer			Sq. Ft.	161

MODEL: 0100198-70A87-040
FILE NAME: pw:\\ildot-pw.bentley.com:PWIDOT\Documents\IDOT Offices\Bureau of Bridges and Structures\Projects\0100198\CADD Plans\0100198_70A87.dgn
5/17/2023 2:01:17 PM

DESIGNED -	RYAN P. NEGANGARD	EXAMINED	ENGINEER OF BRIDGE DESIGN
CHECKED -	DAVID H. RICHTER		
DRAWN -	DENNIS A. POP	PASSED	ENGINEER OF BRIDGES AND STRUCTURES
CHECKED -	R.P.N. / D.H.R. / G.R.A.		

DATE - MAY 16, 2023
REVISED -
REVISED -

STATE OF ILLINOIS
DEPARTMENT OF TRANSPORTATION

PIER DETAILS
STRUCTURE NO. 010-0198 (NB) & 010-0199 (SB)

SHEET 40 OF 42 SHEETS

F.A.I. RTE.	SECTION	COUNTY	TOTAL SHEETS	SHEET NO.
57	(10-30)BR	CHAMPAIGN	107	79

CONTRACT NO. 70A87
ILLINOIS | FED. AID PROJECT

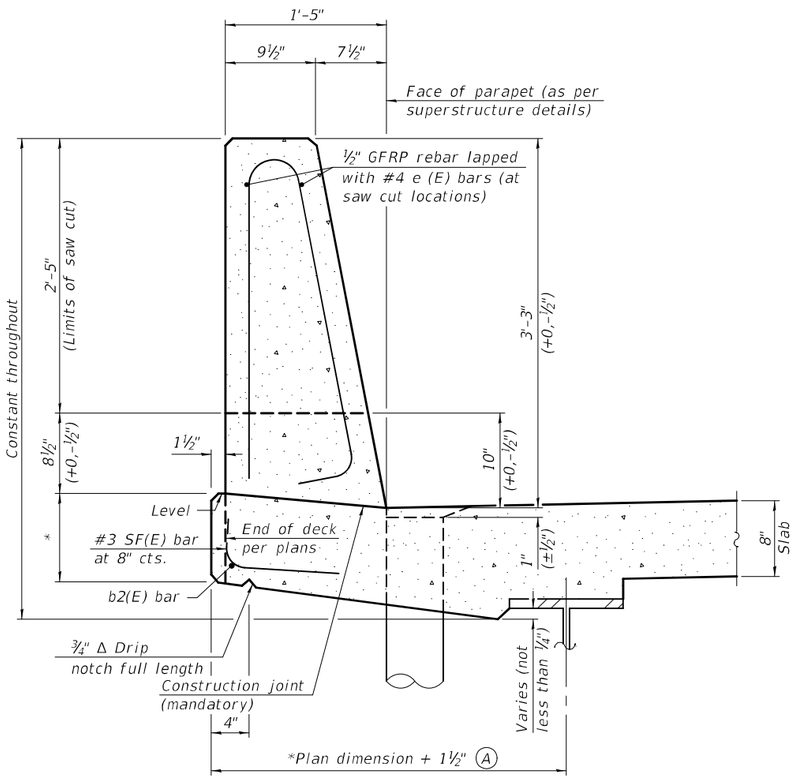

39" CONSTANT-SLOPE PARAPET SECTION

(Showing dimensions, d(E), and ½" Ø GFRP rebar)

*See Superstructure Details.

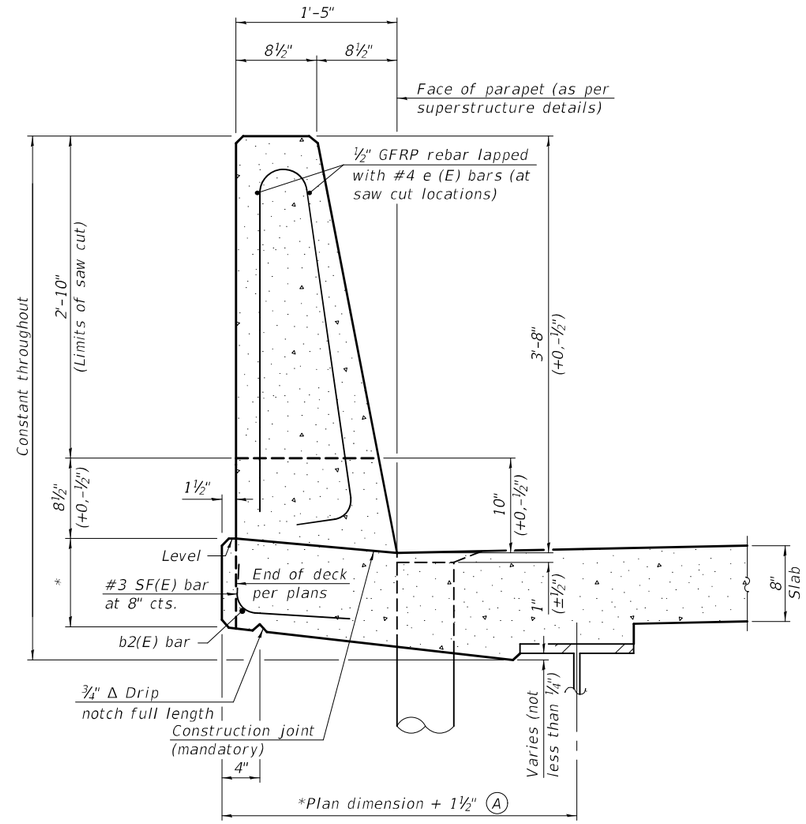

44" CONSTANT-SLOPE PARAPET SECTION

(Showing dimensions, d(E), and ½" Ø GFRP rebar)

Notes:

All dimensions shall remain the same as shown on superstructure details, except dimension A which is to be revised as shown. Additional concrete needed to revise dimension A = 0.00348 cu. yds./ft. for 39" and 44" parapets.

Place full depth aluminum sheets as shown on superstructure details.

Replace all cork joint filler locations with a full thickness saw cut.

Steel superstructure shown. Other superstructure types similar.

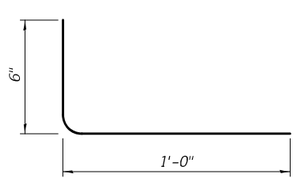

SF(E) BAR

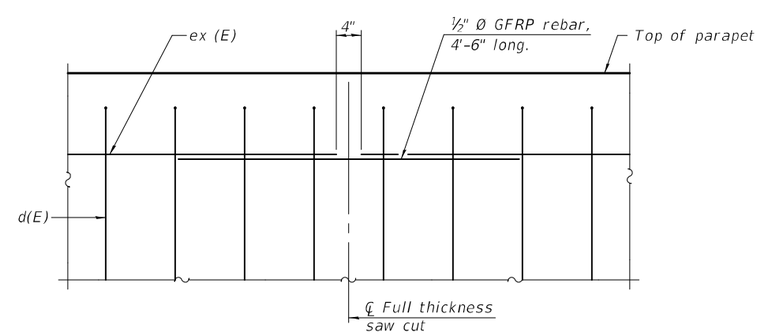

GFRP REBAR STIFFENING DETAIL

(Place as shown in parapet section at each parapet joint location.)

SFP 39-44 11-1-2022

DESIGNED - RYAN P. NEGANGARD	EXAMINED	ENGINEER OF BRIDGE DESIGN	DATE - MAY 16, 2023
CHECKED - DAVID H. RICHTER			
DRAWN - DENNIS A. POP	PASSED	ENGINEER OF BRIDGES AND STRUCTURES	REVISED -
CHECKED - R.P.N. / D.H.R. / G.R.A.			REVISED -

STATE OF ILLINOIS
DEPARTMENT OF TRANSPORTATION

CONCRETE PARAPET SLIPFORMING OPTION
STRUCTURE NO. 010-0198 (NB) & 010-0199 (SB)

SHEET 41 OF 42 SHEETS

F.A.I. RTE.	SECTION	COUNTY	TOTAL SHEETS	SHEET NO.
57	(10-30)BR	CHAMPAIGN	107	80
		CONTRACT NO. 70A87		
	ILLINOIS	FED. AID PROJECT		

MODEL: 0100198-70A87-041
FILE NAME: pw:\\ildot-pw.bentley.com:PWIDOT\Documents\IDOT Offices\Bureau of Bridges and Structures\Projects\0100198\CADD Plans\0100198_70A87.dgn
5/17/2023 2:01:18 PM

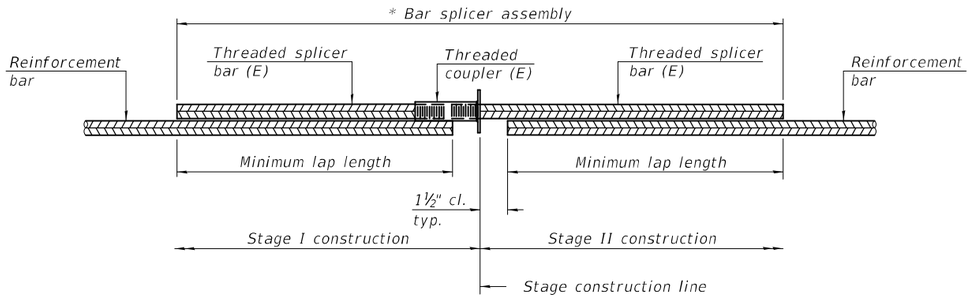

STANDARD BAR SPLICER ASSEMBLY PLAN

Only bar splicer assemblies as presented on the approved QPL list may be used.

Threaded splicer bar length = min. lap length + 1½" + thread length

* Epoxy not required on Bar Splicer Assembly components used in conjunction with black bars.

Location	Bar size	No. assemblies required	Minimum lap length
Deck Slab Top	#5	448	3'-0"
Deck Slab Bottom	#5	290	3'-6"
Deck Slab Along Ends	#5	8	3'-4"
Abutment Diaphragm, Back Face	#6	20	4'-0"
Abutment Diaphragm, Front Face	#6	12	See Diaphragm Bar Splicer Detail
Abutment Diaphragm, Backwall	#4	8	2'-8"
Approach Slab Top	#5	184	3'-4"
Approach Slab Bottom	#8	240	4'-9"
Approach Slab Footing	#5	160	3'-2"
Abutment Cap Backwall	#4	8	2'-11"
Abutment Cap	#7	48	5'-0"
Pier Cap Extension	#5	32	3'-7"

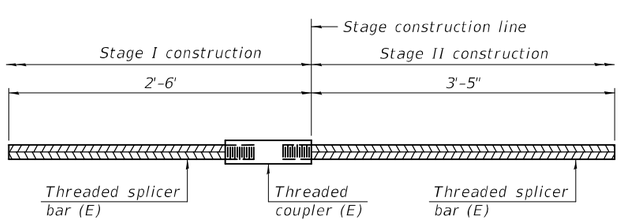

DIAPHRAGM BAR SPLICER DETAIL

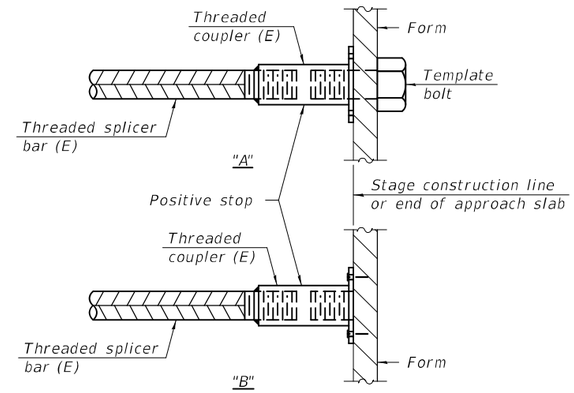

INSTALLATION AND SETTING METHODS

"A" : Set bar splicer assembly by means of a template bolt.
"B" : Set bar splicer assembly by nailing to wood forms or cementing to steel forms.
(E) : Indicates epoxy coating.

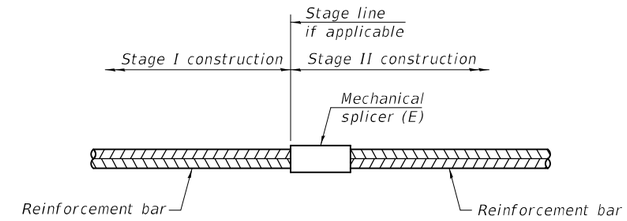

STANDARD MECHANICAL SPLICER

Location	Bar size	No. assemblies required

Notes:
Splicer bars shall be deformed with threaded ends and have a minimum 60 ksi yield strength.
All reinforcement shall be lapped and tied to the splicer bars.
Bar splicer assemblies shall be epoxy coated according to the requirements for reinforcement bars. See Section 508 of the Standard Specifications.
See approved list of bar splicer assemblies and mechanical splicers for alternatives.

DESIGNED - RYAN P. NEGANGARD	EXAMINED	DATE - MAY 16, 2023	STATE OF ILLINOIS DEPARTMENT OF TRANSPORTATION
CHECKED - DAVID H. RICHTER	ENGINEER OF BRIDGE DESIGN		
DRAWN - DENNIS A. POP	PASSED	REVISED -	
CHECKED - R.P.N. / D.H.R. / G.R.A.	ENGINEER OF BRIDGES AND STRUCTURES	REVISED -	

BAR SPLICER ASSEMBLY AND MECHANICAL SPLICER DETAILS
STRUCTURE NO. 010-0198 (NB) & 010-0199 (SB)

SHEET 42 OF 42 SHEETS

F.A.I. RTE.	SECTION	COUNTY	TOTAL SHEETS	SHEET NO.
57	(10-30)BR	CHAMPAIGN	107	81

CONTRACT NO. 70A87

ILLINOIS | FED. AID PROJECT

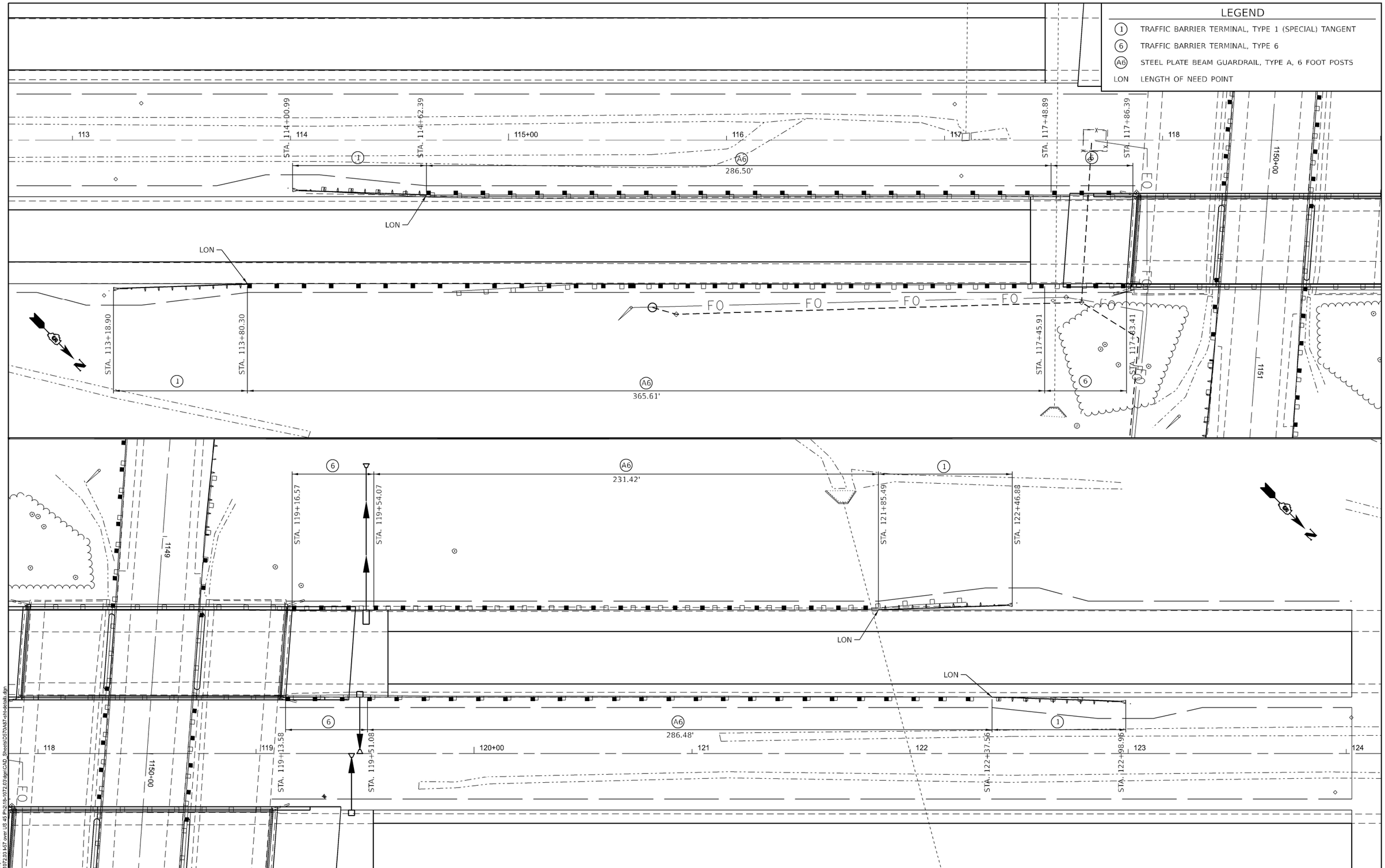

MODEL: Guardrail Layout Details
FILE NAME: P:\18-1072.03\I-57 over US 45 Ph2\18-1072.03\dgn\CAD_Sheets\D570A87-alt-details.dgn

Kaskaskia Engineering Group, LLC
PROFESSIONAL REGISTRATIONS: Illinois Professional Design Firm, Professional Engineering Group
LICENSE NO. 184-004773, 28-3088586
299 E. Main St., Suite 100, Belleville, Illinois 62220
618.233.5677 phone
618.233.5977 fax
www.kaskaskiieng.com

USER NAME = jwarner	DESIGNED -	REVISED -	
	DRAWN -	REVISED -	
PLOT SCALE = 0.16666633 ' / in.	CHECKED -	REVISED -	
PLOT DATE = 3/31/2023	DATE -	REVISED -	

STATE OF ILLINOIS
DEPARTMENT OF TRANSPORTATION

GUARDRAIL LAYOUT DETAILS

SCALE: SHEET 1 OF 6 SHEETS STA. TO STA.

F.A.I. RTE.	SECTION	COUNTY	TOTAL SHEETS	SHEET NO.
57	(10-30)BR	CHAMPAIGN	107	82

CONTRACT NO. 70A87

ILLINOIS | FED. AID PROJECT

DETAIL FOR TEMPORARY RUMBLE STRIPS (SPECIAL)

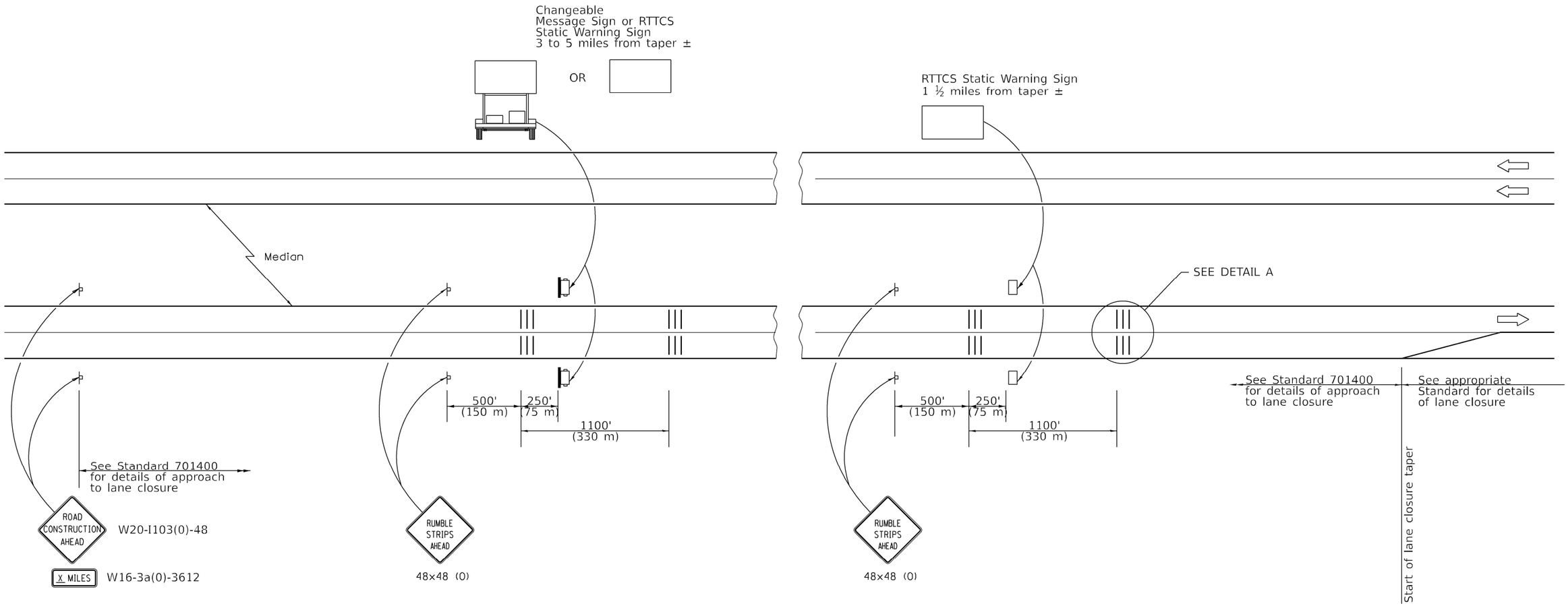

DETAIL A

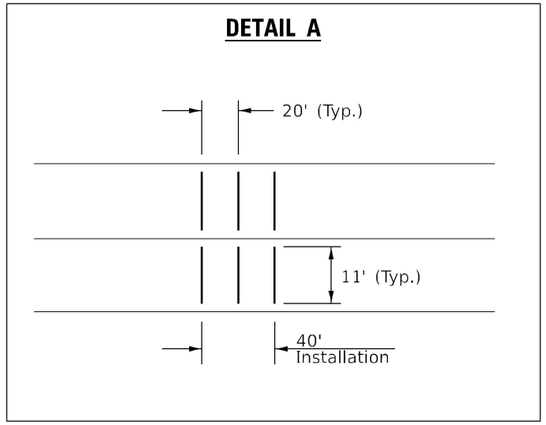

SYMBOLS

- Sign
- Temporary Rumble Strips (Special)
- Trailer Mounted Sign
- RTTCS Static Warning Sign

GENERAL NOTES

Remove the Temporary Rumble Strips (Special) prior to the removal of the advanced warning signs.

All dimensions are in inches (millimeters) unless otherwise shown.

MODEL: Temp Rumble Strip
FILE NAME: P:\18-1072.03 I-57 over US 45 Pk\218-1072.03\dgn\CAD_Sheets\D570A87-sht-details.dgn

Kaskaskia Engineering Group, LLC
PROFESSIONAL REGISTRATIONS: Illinois Professional Design Firm, Professional Engineering Group
LICENSE NO. 184-004773, 28-5008586

USER NAME = jwarner	DESIGNED -	REVISED -	
	DRAWN -	REVISED -	
PLOT SCALE = 0.16666633 ' / in.	CHECKED -	REVISED -	
PLOT DATE = 3/24/2023	DATE -	REVISED -	

STATE OF ILLINOIS
DEPARTMENT OF TRANSPORTATION

DETAIL FOR TEMPOARY RUMBLE STRIPS (SPECIAL)

SCALE: | SHEET 2 OF 6 SHEETS | STA. TO STA.

F.A.I. RTE.	SECTION	COUNTY	TOTAL SHEETS	SHEET NO.
57	(10-30)BR	CHAMPAIGN	107	83
		CONTRACT NO. 70A87		
		ILLINOIS	FED. AID PROJECT	

REAL–TIME TRAFFIC CONTROL SYSTEM
NORTHBOUND

RTTCS STATIC WARNING SIGN
•PAID FOR AS REAL-TIME TRAFFIC CONTROL WARNING SIGN
•48" x 96" (1200mm x 2400mm) WARNING SIGN THAT SAYS "STOPPED TRAFFIC NEXT MILE WHEN FLASHING"

STOPPED TRAFFIC
NEXT MILE
WHEN FLASHING

SINGLE PORTABLE CHANGEABLE MESSAGE SIGN PLACED ½ MILE IN ADVANCE OF 4TH RTTCS BOARD. IT SHALL READ "RIGHT/LEFT LANE CLOSED/5 MILES AHEAD"
•THIS PORTABLE CHANGEABLE MESSAGE SIGN IS INCLUDED IN STANDARD 701400.

Ⓢ SPEED SENSOR
•PAID FOR AS REAL-TIME TRAFFIC CONTROL MONITORING SENSOR UNIT

NOTES:

THE NUMBER OF RTTCS STATIC WARNING SIGNS MAY BE CHANGED AS DIRECTED BY THE ENGINEER. RELOCATION OF RTTCS STATIC WARNING SIGNS IS INCLUDED IN THE RTTCS PAY ITEMS.

SPEED SENSORS SPACED APPROXIMATELY EVERY 1/2 MILE.
RTTC WARNING SIGNS SPACED EVERY 1 MILE.

RTTC = REAL-TIME TRAFFIC CONTROL

RTTCS = REAL-TIME TRAFFIC CONTROL SYSTEM

MODEL: RTTCS - NB
FILE NAME: P:\18-1072.03\dgn\CAD_Sheets\D570A87-sht-details.dgn

Kaskaskia Engineering Group, LLC
PROFESSIONAL REGISTRATIONS: Illinois Professional Design Firm, Professional Engineering Group
LICENSE NO.: 184-004773, 20-3018586

USER NAME = jwarner	DESIGNED -	REVISED -	
	DRAWN -	REVISED -	
PLOT SCALE = 0.16666633 ' / in.	CHECKED -	REVISED -	
PLOT DATE = 3/24/2023	DATE -	REVISED -	

STATE OF ILLINOIS
DEPARTMENT OF TRANSPORTATION

REAL TIME TRAFFIC CONTROL SYSTEM

SCALE: | SHEET 3 OF 6 SHEETS | STA. | TO STA.

F.A. I. RTE.	SECTION	COUNTY	TOTAL SHEETS	SHEET NO.
57	(10-30)BR	CHAMPAIGN	107	84
		CONTRACT NO. 70A87		
	ILLINOIS	FED. AID PROJECT		

REAL–TIME TRAFFIC CONTROL SYSTEM
SOUTHBOUND

RTTCS STATIC WARNING SIGN
•PAID FOR AS REAL-TIME TRAFFIC CONTROL WARNING SIGN
•48" x 96" (1200mm x 2400mm) WARNING SIGN THAT SAYS "STOPPED TRAFFIC NEXT MILE WHEN FLASHING"

STOPPED TRAFFIC
NEXT MILE
WHEN FLASHING

SINGLE PORTABLE CHANGEABLE MESSAGE SIGN PLACED ½ MILE IN ADVANCE OF 4TH RTTCS BOARD. IT SHALL READ "RIGHT/LEFT LANE CLOSED/5 MILES AHEAD"
•THIS PORTABLE CHANGEABLE MESSAGE SIGN IS INCLUDED IN STANDARD 701400.

Ⓢ SPEED SENSOR
•PAID FOR AS REAL-TIME TRAFFIC CONTROL MONITORING SENSOR UNIT

Sources: Esri, HERE, Garmin, USGS, Intermap, INCREMENT P, NRCan, Esri Japan, METI, Esri China (Hong Kong), Esri Korea, Esri (Thailand), NGCC, (c) OpenStreetMap contributors, and the GIS User Community

NOTES:

THE NUMBER OF RTTCS STATIC WARNING SIGNS MAY BE CHANGED AS DIRECTED BY THE ENGINEER. RELOCATION OF RTTCS STATIC WARNING SIGNS IS INCLUDED IN THE RTTCS PAY ITEMS.

SPEED SENSORS SPACED APPROXIMATELY EVERY 1/2 MILE.
RTTC WARNING SIGNS SPACED EVERY 1 MILE.

RTTC = REAL-TIME TRAFFIC CONTROL

RTTCS = REAL-TIME TRAFFIC CONTROL SYSTEM

MODEL: RTTCS - SB
FILE NAME: P:\18-1072\03-I-57 over US 45 Ph2\18-1072.03\dgn\CAD_Sheets\0570A87-ith-details.dgn

Kaskaskia Engineering Group, LLC
PROFESSIONAL REGISTRATIONS
Illinois Professional Design Firm 184-001973
Professional Engineering Group 20-3500046
201 E. Main St., Suite 300
Carbondale, IL 62901
618.453.5120 phone
618.453.5177 fax
www.kaskaskiaeng.com
LICENSE NO.

USER NAME = jwarner	DESIGNED -	REVISED -	
	DRAWN -	REVISED -	
PLOT SCALE = 0.16666633 ' / in.	CHECKED -	REVISED -	
PLOT DATE = 3/24/2023	DATE -	REVISED -	

STATE OF ILLINOIS
DEPARTMENT OF TRANSPORTATION

REAL TIME TRAFFIC CONTROL SYSTEM

SCALE: | SHEET 4 OF 6 SHEETS | STA. | TO STA.

F.A.I. RTE.	SECTION	COUNTY	TOTAL SHEETS	SHEET NO.
57	(10-30)BR	CHAMPAIGN	107	85
		CONTRACT NO. 70A87		
		ILLINOIS	FED. AID PROJECT	

NOTES

THE TAPER RATES SHOWN SHALL BE CONTROLLED BY STRINGLINE(S) ERECTED, MAINTAINED, AND REMOVED AND DISPOSED OF BY THE CONTRACTOR. SEE SPECIAL PROVISION FOR STRINGLINE.

VARIABLE DEPTH MILLING IN THE BUTT JOINT SHALL BE INCLUDED IN THE COST OF PAVEMENT REMOVAL, AND NO ADDITIONAL COMPENSATION WILL BE ALLOWED.

VARIABLE DEPTH HOT-MIX ASPHALT SHALL BE PLACED AS SHOWN IN THE BUTT JOINT TRANSITION. THIS WORK SHALL BE INCLUDED IN THE COST OF POLYMERIZED HOT-MIX ASHPALT SURFACE COURSE, IL-9.5FG, MIX "D", N90 AND HMA BINDER COURSES. NO ADDITIONAL COMPENSATION WILL BE ALLOWED.

BUTT JOINT DETAIL

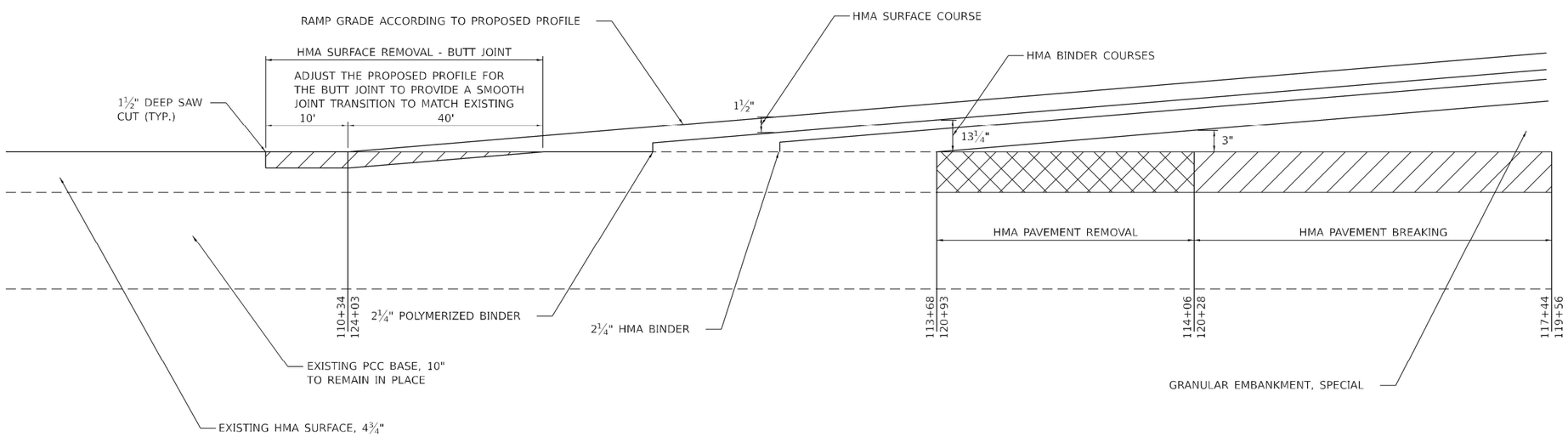

NOTE:
SAW CUT IS INCLUDED IN COST OF HMA SURFACE REMOVAL - BUTT JOINT.

MODEL: South End Taper
FILE NAME: P:\18-1072.03 I-57 over US 45 Ph2\18-1072.03\dgn\CAD_Sheets\D570A87-sht-details.dgn

Kaskaskia Engineering Group, LLC
PROFESSIONAL REGISTRATIONS: Illinois Professional Design Firm, Professional Engineering Group
LICENSE NO.: 184-004773, 28-000596

USER NAME = jwarner	DESIGNED -	REVISED -	
	DRAWN -	REVISED -	
PLOT SCALE = 0.16666633 ' / in.	CHECKED -	REVISED -	
PLOT DATE = 3/24/2023	DATE -	REVISED -	

STATE OF ILLINOIS
DEPARTMENT OF TRANSPORTATION

FAI 57 (I–57)
BUTT JOINT DETAIL

SCALE: | SHEET 5 OF 6 SHEETS | STA. | TO STA.

F.A.I. RTE.	SECTION	COUNTY	TOTAL SHEETS	SHEET NO.
57	(10-30)BR	CHAMPAIGN	107	86
		CONTRACT NO. 70A87		
	ILLINOIS	FED. AID PROJECT		

REMOVE, SALVAGE, AND STORE ROAD WEATHER INFORMATION SYSTEM AT DISTRICT 5, CHAMPAIGN SIGN SHOP
201 EISNER RD., CHAMPAIGN, IL

NEW HANDHOLE
STA. 117+67, 9' RT

PULL EXISTING CABLE AND STORE IN PROPOSED HANDHOLE

74 LF 2" PVC CONDUIT

11 LF 2" PVC CONDUIT

186 LF 2" PVC CONDUIT

REMOVE, SALVAGE, AND RETURN
EXISTING CCTV CAMERA AND
EQUIPMENT TO DISTRICT 5,
CHAMPAIGN SIGN SHOP
201 EISNER RD., CHAMPAIGN, IL

EXISTING CABLE TO REPLACED WITH 12 FIBER, SINGLE MODE CABLE
ALL 12 FIBERS TO BE TERMATED AT TERMINAL PANEL IN CCTV CABINET
ELECTRIC CABLE IN CONDUIT, SIGNAL NO. 10 3C
ELECTRIC CABLE IN CONDUIT, TRACER NO. 12 1C

NEW HANDHOLE
STA. 117+63, 75' RT

NEW HANDHOLE
STA. 115+77, 80' RT

CONCRETE FOUNDATION TYPE E, 36" DIA.
CAMERA POLE, 55 FT
CLOSED CIRCUIT TELEVISION CABINET
CLOSED CIRCUIT TELEVISION DOME
CAMERA, IP BASED

161 LF 2" PVC CONDUIT

DRILL EXISTING HANDHOLE

FUSION SPLICE FIBER IN EXISTING HANDHOLE PRIOR TO
CONSTRUCTION TO BYPASS EX SURVEILLANCE EQUIPMENT

AFTER INSTALLATION OF PR SURVEILLANCE EQUIPMENT,
FUSION SPLICE NEW FIBER IN EXISTING HANDHOLE

115+00 | 116 | 117 | 118 | 119 | 120+00

1149 | 1150+00 | 1151 | 1152

FO

MODEL: Weather Station Details
FILE NAME: P:\18-1072.03 I-57 over US 45 PH2\18-1072.03\dgn\CAD_Sheets\D570A87-sht-details.dgn

Kaskaskia Engineering Group, LLC PROFESSIONAL REGISTRATIONS Illinois Professional Design Firm 184.004773 Professional Engineering Group 20-5080086 LICENSE NO. 200 E. Main St., Suite 300 Belleville, IL 62220 618.233.5672 phone 618.233.5677 fax www.kaskaskiaeng.com	USER NAME = jwarner	DESIGNED -	REVISED -
		DRAWN -	REVISED -
	PLOT SCALE = 0.16666633 ' / in.	CHECKED -	REVISED -
	PLOT DATE = 3/31/2023	DATE -	REVISED -

STATE OF ILLINOIS
DEPARTMENT OF TRANSPORTATION

ROAD WEATHER STATION & SURVEILLANCE CAMERA DETAILS

SCALE: | SHEET 6 OF 6 SHEETS | STA. | TO STA.

F.A. I. RTE.	SECTION	COUNTY	TOTAL SHEETS	SHEET NO.
57	(10-30)BR	CHAMPAIGN	107	87
		CONTRACT NO. 70A87		
		ILLINOIS	FED. AID PROJECT	

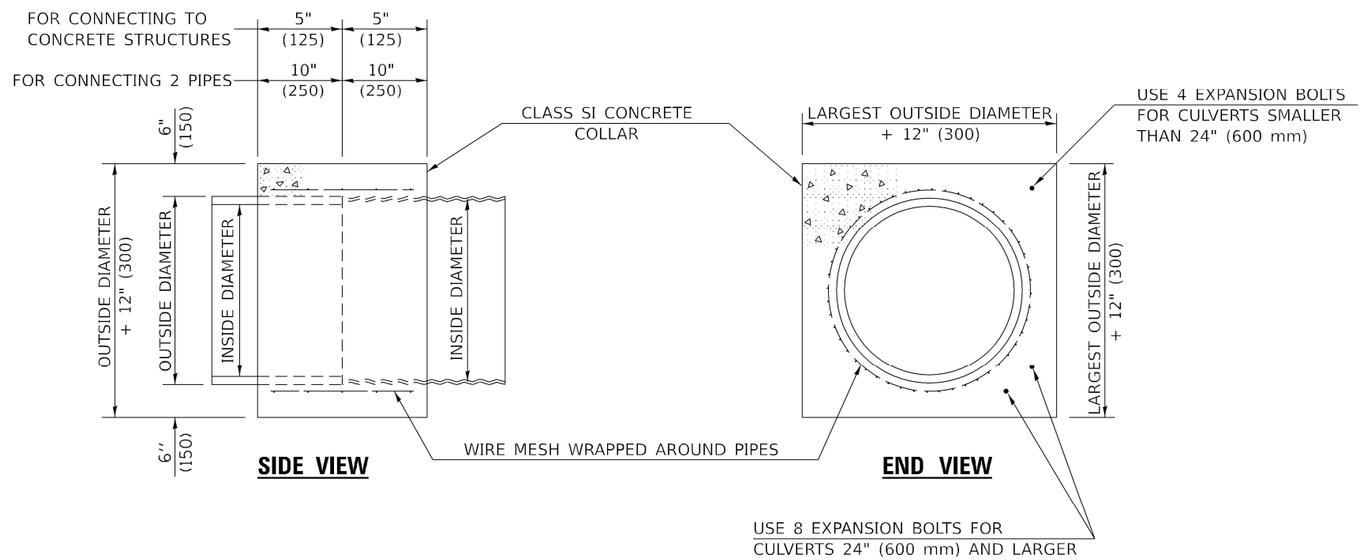

QUANTITIES FOR CONCRETE PIPES	
INSIDE DIAMETER OF PIPE INCH (mm)	ESTIMATED CLASS SI CONCRETE REQUIRED 20" (500 mm) WIDTH CU.YD. (m^3)
4" (100)	0.14 (0.11)
6" (150)	0.16 (0.12)
8" (200)	0.19 (0.14)
10" (250)	0.22 (0.17)
12" (300)	0.25 (0.19)
15" (375)	0.30 (0.23)
18" (450)	0.35 (0.27)
24" (600)	0.45 (0.35)
30" (750)	0.57 (0.43)
36" (900)	0.69 (0.53)
42" (1050)	0.83 (0.63)
48" (1200)	0.97 (0.74)
54" (1350)	1.12 (0.86)
60" (1500)	1.28 (0.98)

QUANTITIES FOR METAL PIPES	
INSIDE DIAMETER OF PIPE INCH (mm)	ESTIMATED CLASS SI CONCRETE REQUIRED 20" (500 mm) WIDTH CU.YD. (m^3)
4" (100)	0.12 (0.09)
6" (150)	0.14 (0.11)
8" (200)	0.16 (0.12)
10" (250)	0.19 (0.14)
12" (300)	0.21 (0.16)
15" (375)	0.25 (0.19)
18" (450)	0.29 (0.22)
24" (600)	0.38 (0.29)
30" (750)	0.47 (0.36)
36" (900)	0.59 (0.45)
42" (1050)	0.69 (0.53)
48" (1200)	0.81 (0.62)
54" (1350)	0.93 (0.71)
60" (1500)	1.05 (0.81)

GENERAL NOTES

1. CLASS SI CONCRETE SHALL BE USED THROUGHOUT.
2. WHEN CONCRETE COLLARS ARE USED TO CONNECT PIPES OF DIFFERENT OUTSIDE DIAMETERS, THE CONCRETE COLLAR SHALL BE FORMED USING THE LARGEST OUTSIDE DIAMETER (SEE END VIEW).
3. THE WIRE MESH SHALL WEIGH NOT LESS THAN 54#/100 SQ. FT. (2.63 kg/m^2).
4. WHEN CONCRETE COLLARS ARE CONSTRUCTED ADJACENT TO AN EXISTING CONCRETE STRUCTURE (HEADWALLS, ETC.) EXPANSION BOLTS, SHALL BE USED AND WILL BE PAID FOR AT THE CONTRACT UNIT PRICE, EACH, FOR EXPANSION BOLTS OF THE SIZE SPECIFIED IN THE PLANS.
5. CONCRETE COLLARS WILL BE PAID FOR AT THE CONTRACT UNIT PRICE, PER CUBIC YARD (CUBIC METER), FOR CONCRETE COLLARS INCLUDING ALL MATERIAL AND LABOR SPECIFIED TO COMPLETE THE WORK IN PLACE.

Note: All dimensions are in INCHES (millimeters) unless otherwise shown.

DISTRICT 5 DETAIL NO. 54248510

F.A.I. RTE.	SECTION	COUNTY	TOTAL SHEETS	SHEET NO.
57	(10-30)BR	CHAMPAIGN	107	88
		CONTRACT NO. 70A87		
		ILLINOIS	FED. AID PROJECT	

MODEL: 54248510
FILE NAME: P:\18-1072.03-I-57 over US 45 Ph2\18-1072.03\dgn\CAD_Sheets\D570A87-sht-detail.dgn

Kaskaskia Engineering Group, LLC
PROFESSIONAL REGISTRATIONS: Illinois Professional Design Firm Professional Engineering Group
LICENSE NO.: 184.004793 28-5000086

USER NAME = jwarner	DESIGNED -	REVISED -
	DRAWN -	REVISED -
PLOT SCALE = 0.16666633 ' / in.	CHECKED -	REVISED -
PLOT DATE = 3/24/2023	DATE -	REVISED -

STATE OF ILLINOIS
DEPARTMENT OF TRANSPORTATION

CONCRETE COLLAR

SCALE: | SHEET 1 OF 3 SHEETS | STA. | TO STA.

CENTERLINE INTERSTATE OR MULTI–LANE TWO WAY DIVIDED HIGHWAY

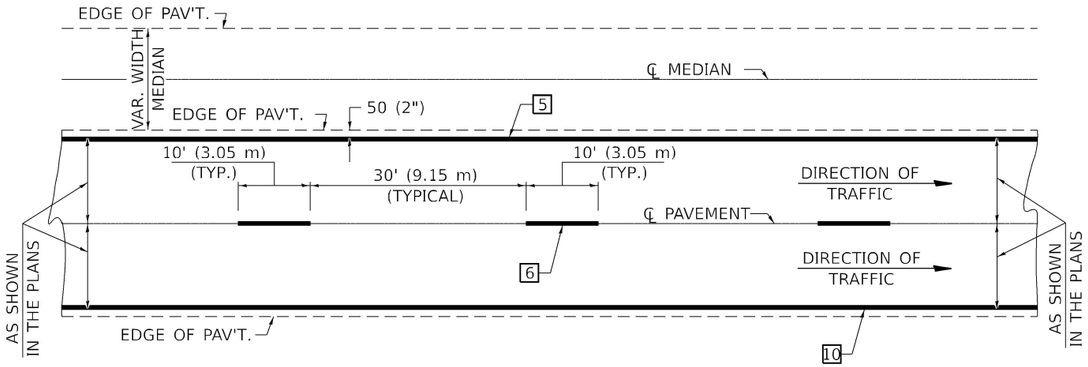

NOTE: PAVEMENT MARKINGS ARE TO BE EXTENDED THROUGH OMISSIONS WHEN APPLICABLE.

NOTE: SEE ARTICLES 780.04 & 781.03 FOR LOCATION OF STRIPES AND MARKERS RELATIVE TO EDGES OR JOINTS.

FOR RAISED REFLECTIVE PAVEMENT MARKERS, REFER TO STANDARD 781001.

TYPICAL EXIT RAMP TERMINAL

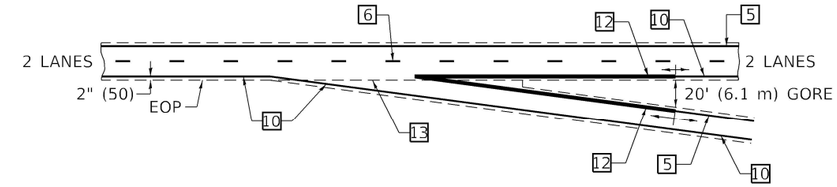

EXIT RAMP TERMINAL with EXCLUSIVE (auxiliary) LANE

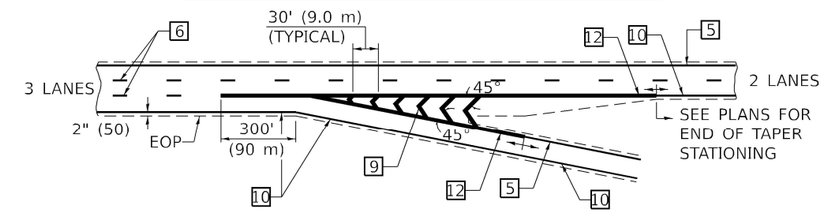

TYPICAL ENTRANCE RAMP TERMINAL

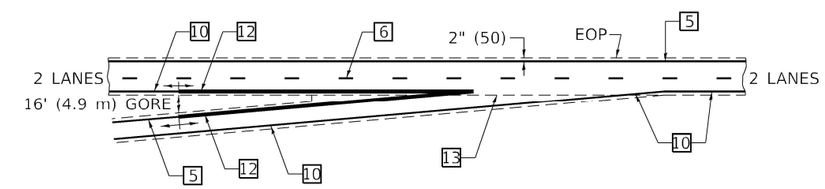

ENTRANCE RAMP TERMINAL with EXCLUSIVE LANE

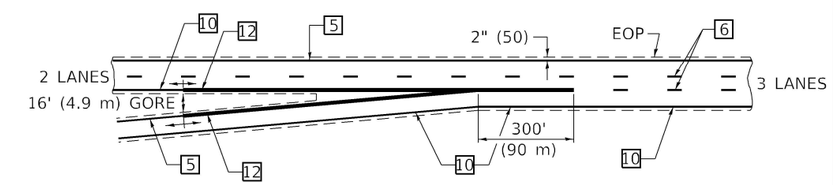

TYPICAL PAVEMENT MARKING LEGEND

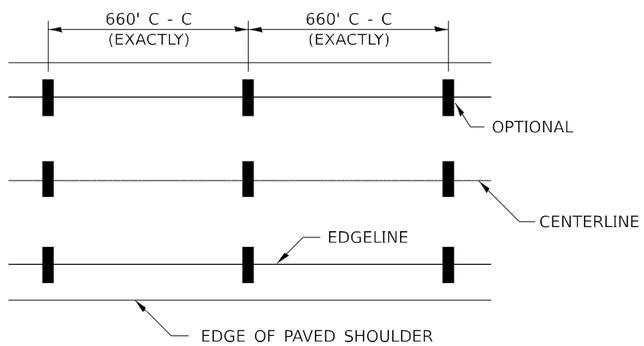

IT WILL BE NECESSARY TO HAVE A REPRESENTATIVE OF THE STATE POLICE PRESENT SO THAT THE ACCURACY OF MEASUREMENT CAN BE ATTESTED TO IN COURT.

1. 4" (100) SKIP-DASH (YELLOW)
2. 4" (100) SOLID (YELLOW)
3. 12" (300) DIAGONAL (YELLOW)
4. 4" (100) DOUBLE YELLOW (NARROW)
5. 6" (150) SOLID (YELLOW)
6. 6" (150) SKIP-DASH (WHITE)
7. 4" (100) SKIP-DASH (WHITE)
8. 4" (100) SOLID (WHITE)
9. 12" (300) DIAGONAL (WHITE)
10. 6" (150) SOLID (WHITE)
11. 24" (600) STOP BAR (WHITE)
12. 8" (200) SOLID (WHITE)
13. 6" (150) LANE LINE EXTENSIONS (WHITE)

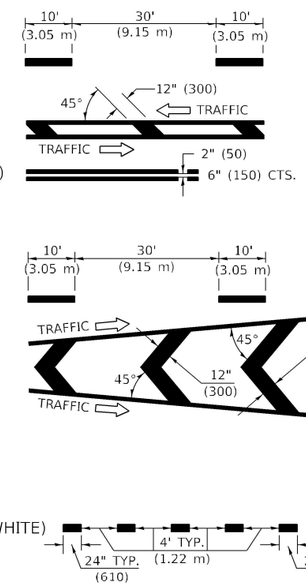

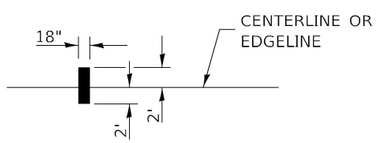

AERIAL SPEED CHECK ZONES

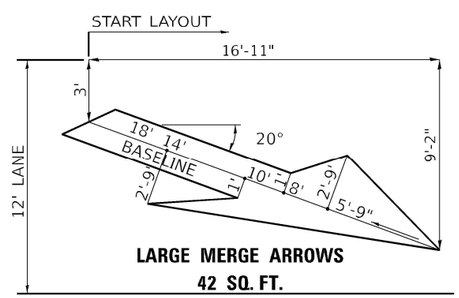

LARGE MERGE ARROWS
42 SQ. FT.

Note: All dimensions are in INCHES (millimeters) unless otherwise shown.

DISTRICT 5 DETAIL NO. 7800BBBB

F.A.I. RTE.	SECTION	COUNTY	TOTAL SHEETS	SHEET NO.
57	(10-30)BR	CHAMPAIGN	107	89
		CONTRACT NO. 70A87		
		ILLINOIS	FED. AID PROJECT	

Kaskaskia Engineering Group, LLC
PROFESSIONAL REGISTRATIONS: Illinois Professional Design Firm 184-004773; Professional Engineering Group 20-3088586
LICENSE NO.

USER NAME = jwarner	DESIGNED -	REVISED -	
	DRAWN -	REVISED -	
PLOT SCALE = 0.16666633 ' / in.	CHECKED -	REVISED -	
PLOT DATE = 3/24/2023	DATE -	REVISED -	

STATE OF ILLINOIS
DEPARTMENT OF TRANSPORTATION

PAVEMENT MARKING (INTERSTATE & MULTI–LANE APPLICATIONS)

SCALE: | SHEET 2 OF 3 SHEETS | STA. | TO STA.

MODEL: 7800BBBB
FILE NAME: P:\18-1072.03 I-57 over US 45 Pk\218-1072.03\dgn\CAD_Sheets\D570A87-sht-details.dgn

DESIGNER NOTE: PROVIDE MAP WITH SIGN LOCATIONS (A, B, ETC.) AND COORDINATE WITH TRAFFIC OPERATIONS ENGINEER.

INCLUDE DISTRICT SPECIAL PROVISION -"WIDTH RESTRICTION SIGNING"

A

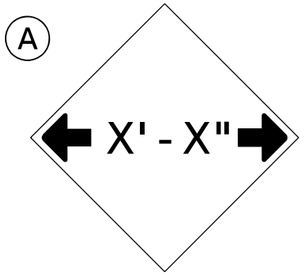

W12-2(0)-48"x48"(1200x1200)

B

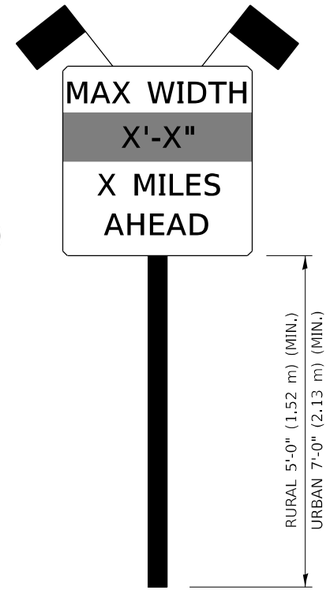

SIGN PANEL, TYPE II

B

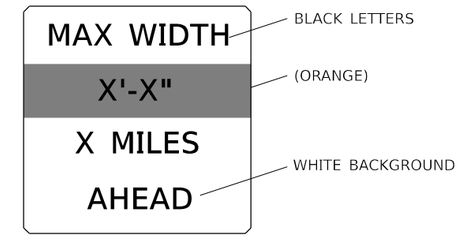

W12-I103(O)-48"x48"(1200x1200)
"D" LETTERS/NUMBERS

SIGN (A) 2 SIGNS - W12-2(O)-48"x48"(1200x1200) ARE TO BE PLACED AS SHOWN IN THE PLANS OR AS DIRECTED BY THE ENGINEER.

SIGN (B) 2 SIGNS - (SIGN PANEL, TYPE II) AS SHOWN ARE TO BE PLACED AS SHOWN IN THE PLANS OR AS DIRECTED BY THE ENGINEER.

I-57 STAGE I MAX WIDTH = 12.5'

I-57 STAGE II MAX WIDTH = 12.0'

US 45 STAGE III MAX WIDTH = 10.5'

GENERAL NOTES

1. ALL TRAFFIC CONTROL DEVICES SHALL BE FURNISHED, ERECTED AND MAINTAINED BY THE CONTRACTOR.
2. ALL (B) SIGNS SHALL HAVE FLAGS INSTALLED UNLESS OTHERWISE DIRECTED.
3. LOCATIONS OF TRAFFIC CONTROL DEVICES MAY BE ADJUSTED BY THE ENGINEER.
4. ALL TRAFFIC CONTROL SHOWN ON THIS SHEET SHALL BE PAID FOR AT THE CONTRACT LUMP SUM PRICE FOR WIDTH RESTRICTION SIGNING.
5. ALL SIGNS SHALL BE POST MOUNTED UNLESS OTHERWISE DIRECTED.
6. ALL SIGNS SHOWN ORANGE (O) SHALL BE FLUORESCENT ORANGE.
7. ALL SIGNS SHOWN SHALL CONSIST OF THE CURRENT RETROREFLECTIVE SHEETING REQUIREMENTS AS OUTLINED IN SECTION 1106.01 OF THE STANDARD SPECIFICATIONS BOOK.

Note: All dimensions are in INCHES (millimeters) unless otherwise shown.

DISTRICT 5 DETAIL NO. X7200201

MODEL: X7200201
FILE NAME: P:\18-1072.03 I-57 over US 45 Phi2\18-1072.03\dgn\CAD_Sheets\D570A87-sht-details.dgn

Kaskaskia Engineering Group, LLC
PROFESSIONAL REGISTRATIONS: Illinois Professional Design Firm; Professional Engineering Group
LICENSE NO.: 184-000792; 20-3585986
209 E. Main St., Suite 100, Belleville, Illinois 62220
618.233.5677 phone
618.233.3077 fax
www.kaskaskiaeng.com

USER NAME = jwarner	DESIGNED -	REVISED -	
	DRAWN -	REVISED -	
PLOT SCALE = 0.16666633 ' / in.	CHECKED -	REVISED -	
PLOT DATE = 3/24/2023	DATE -	REVISED -	

STATE OF ILLINOIS
DEPARTMENT OF TRANSPORTATION

WIDTH RESTRICTION SIGNING

SCALE: | SHEET 3 OF 3 SHEETS | STA. | TO STA.

F.A. I. RTE.	SECTION	COUNTY	TOTAL SHEETS	SHEET NO.
57	(10-30)BR	CHAMPAIGN	107	90
		CONTRACT NO. 70A87		
		ILLINOIS FED. AID PROJECT		

FINAL SURVEY		BY	DATE
NOTE BOOK	SURVEYED		
	PLOTTED		
	TEMPLATE		
	AREAS		
NO.	AREAS CHECKED		

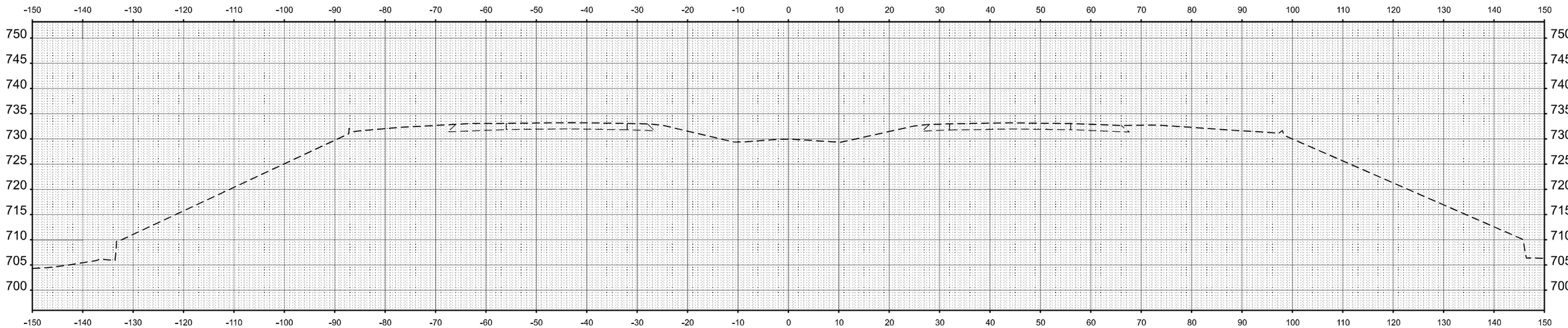

STA 109+50.00

ORIGINAL SURVEY		BY	DATE
NOTE BOOK	SURVEYED		
	PLOTTED		
	TEMPLATE		
	AREAS		
NO.	AREAS CHECKED		

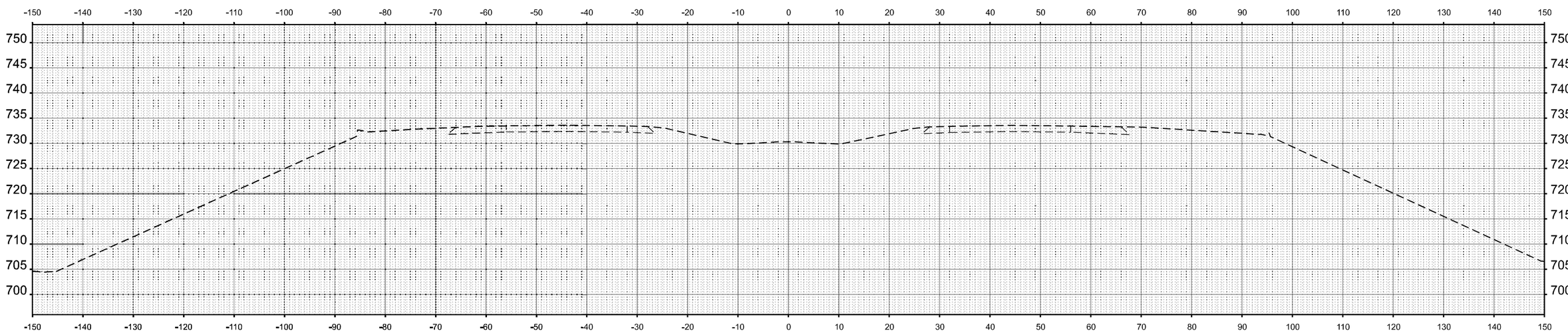

STA 109+00.00

MODEL: Ex_L - 109+00.00 R2 [Sheet]
FILE NAME: P:\19-107\203 I-57 over US 45 Pr\2019-107\203\dgn\CAD_Sheets\D570A87-sht-Xsect_10.dgn

Kaskaskia Engineering Group, LLC
299 E. Main St., Suite 300
Belleville, Illinois 62220
618.233.5877 phone
618.233.5877 fax
www.kaskaskiaeng.com
PROFESSIONAL REGISTRATIONS — LICENSE NO.
Illinois Professional Design Firm — 184.004873
Professional Engineering Group — 20-1010586

USER NAME = jwarner	DESIGNED -	REVISED -
	DRAWN -	REVISED -
PLOT SCALE = 0.16666633 ' / in.	CHECKED -	REVISED -
PLOT DATE = 3/24/2023	DATE -	REVISED -

STATE OF ILLINOIS
DEPARTMENT OF TRANSPORTATION

FAI 57 (I–57)
CROSS SECTIONS

SCALE: 1"=10' | SHEET 1 OF 17 SHEETS | STA. | TO STA.

F.A.I. RTE.	SECTION	COUNTY	TOTAL SHEETS	SHEET NO.
57	(10-30)BR	CHAMPAIGN	107	91
		CONTRACT NO. 70A87		
	ILLINOIS	FED. AID PROJECT		

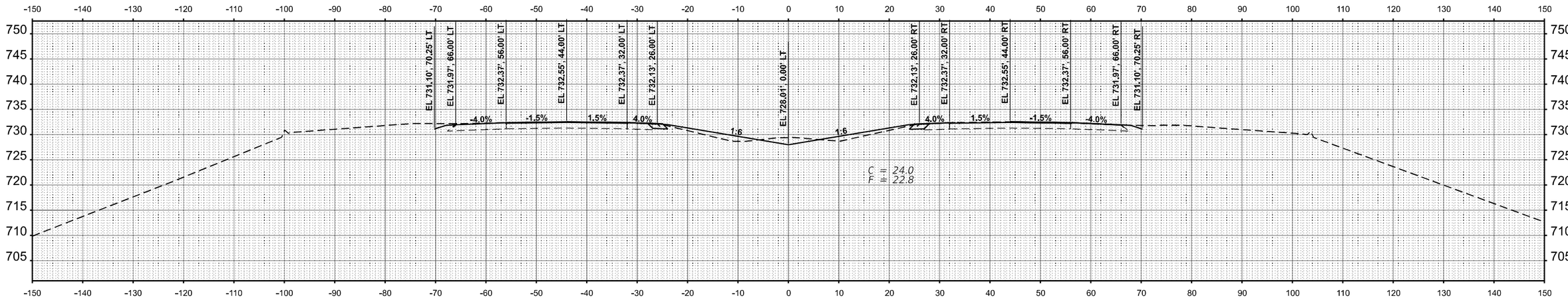

STA 110+34.39

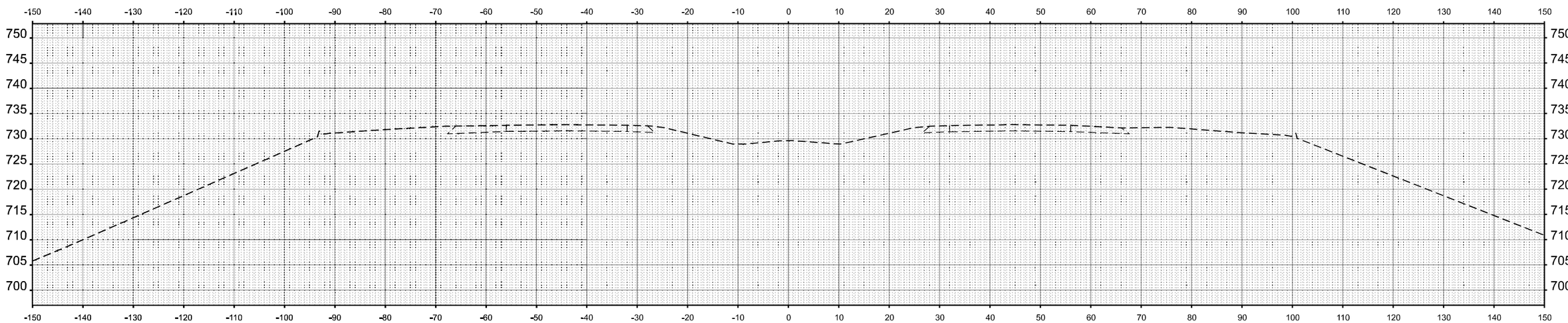

STA 110+00.00

FINAL SURVEY	BY	DATE
SURVEYED		
PLOTTED		
TEMPLATE		
AREAS		
AREAS CHECKED		
NOTE BOOK		
NO.		

ORIGINAL SURVEY	BY	DATE
SURVEYED		
PLOTTED		
TEMPLATE		
AREAS		
AREAS CHECKED		
NOTE BOOK		
NO.		

MODEL: ExCL - 110+00.00 R2 [Sheet]
FILE NAME: P:\18-1072.03 I-57 over US 45 Ph2\18-1072.03\dgn\CAD_Sheets\D570A87-sht-X-sec_1-10.dgn

Kaskaskia Engineering Group, LLC
PROFESSIONAL ASSOCIATIONS
Illinois Professional Design Firm 184.004773
Professional Engineering Group 20-1989986
299 E. Main St., Suite 300
Belleville, Illinois 62220
618-233-5677 phone
618-233-5677 fax
www.kaskaskiaeng.com
LICENSED
04.20.2023

USER NAME = jwarner	DESIGNED -	REVISED -
	DRAWN -	REVISED -
PLOT SCALE = 0.16666633 ' / in.	CHECKED -	REVISED -
PLOT DATE = 3/24/2023	DATE -	REVISED -

STATE OF ILLINOIS
DEPARTMENT OF TRANSPORTATION

FAI 57 (I-57)
CROSS SECTIONS

SCALE: 1"=10' | SHEET 2 OF 17 SHEETS | STA. TO STA.

F.A.I. RTE.	SECTION	COUNTY	TOTAL SHEETS	SHEET NO.
57	(10-30)BR	CHAMPAIGN	107	92

CONTRACT NO. 70A87

ILLINOIS | FED. AID PROJECT

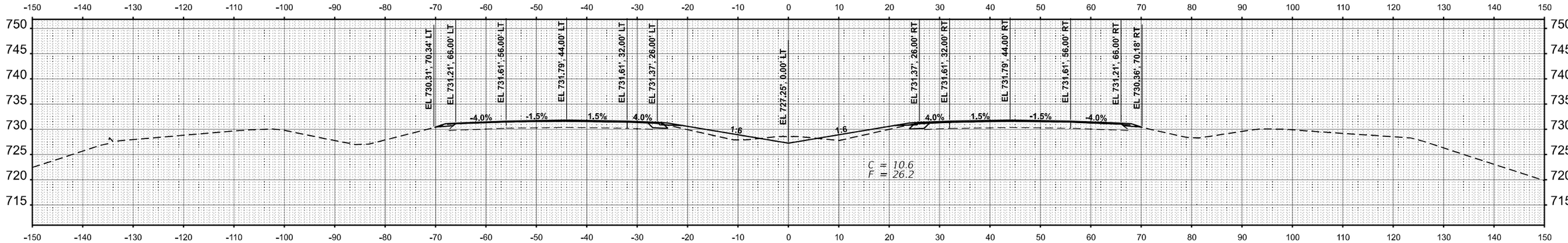

STA 111+50.00

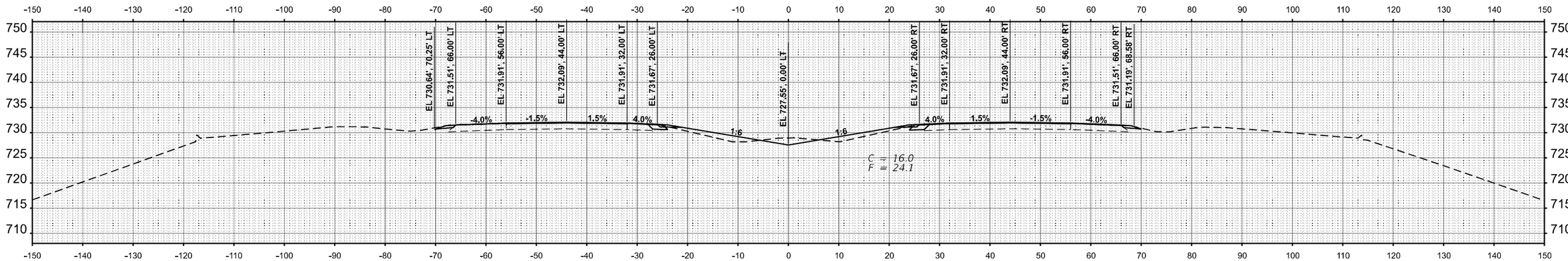

STA 111+00.00

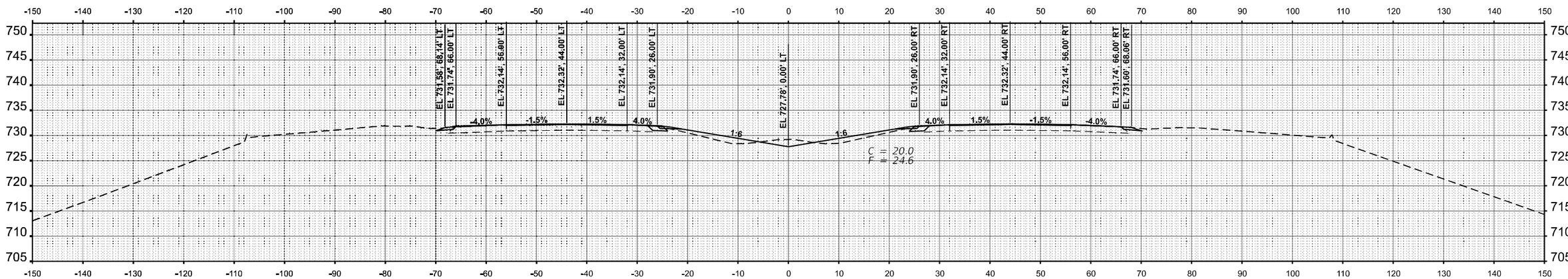

STA 110+65.00

FINAL SURVEY		BY	DATE
NOTE BOOK	SURVEYED		
	PLOTTED		
	TEMPLATE		
	AREAS		
NO.	AREAS CHECKED		

ORIGINAL SURVEY		BY	DATE
NOTE BOOK	SURVEYED		
	PLOTTED		
	TEMPLATE		
	AREAS		
NO.	AREAS CHECKED		

MODEL: ExCL = 110+65.00 R2 [Sheet1]
FILE NAME: P:\18-1072.03-I-57 over US 45 Ph2\18-1072.03\dgn\CAD_Sheets\D570A87-sht-xSec-L_10.dgn

Kaskaskia Engineering Group, LLC
299 E. Main St., Suite 300
Belleville, Illinois 62220
618-233-5877 phone
618-233-5877 fax
www.kaskaskiaeng.com
PROFESSIONAL DESIGN FIRM
Illinois Professional Design Firm
Professional Engineering Group
LICENSE NO.
184.004773
20-3989986

USER NAME = jwarner	DESIGNED -	REVISED -
	DRAWN -	REVISED -
PLOT SCALE = 0.166666633 ' / in.	CHECKED -	REVISED -
PLOT DATE = 3/24/2023	DATE -	REVISED -

STATE OF ILLINOIS
DEPARTMENT OF TRANSPORTATION

FAI 57 (I-57)
CROSS SECTIONS

SCALE: 1"=10' | SHEET 3 OF 17 SHEETS | STA. TO STA.

F.A.I. RTE.	SECTION	COUNTY	TOTAL SHEETS	SHEET NO.
57	(10-30)BR	CHAMPAIGN	107	93
		CONTRACT NO. 70A87		
	ILLINOIS	FED. AID PROJECT		

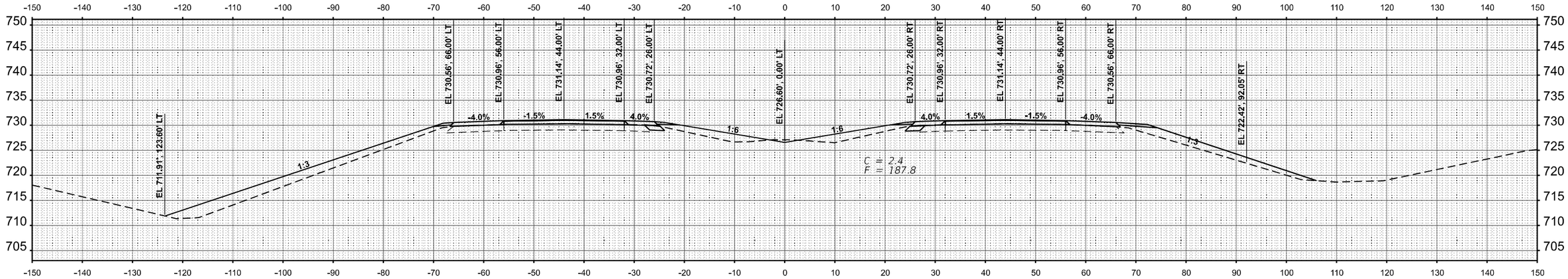

STA 113+00.00

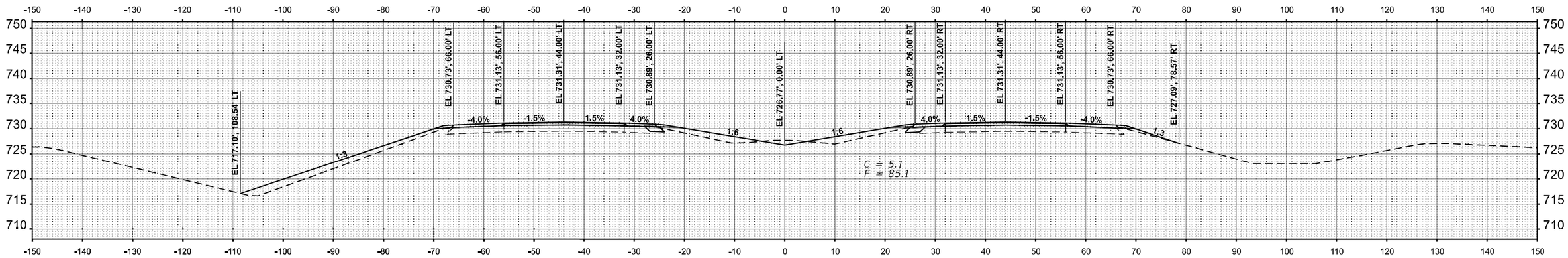

STA 112+50.00

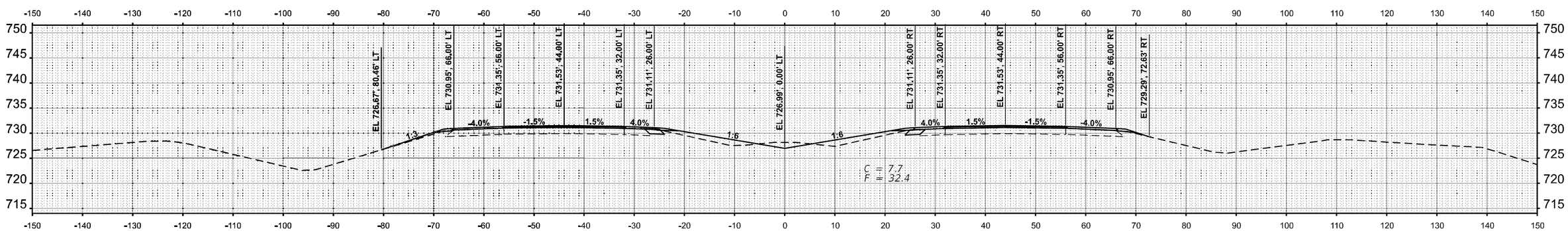

STA 112+00.00

FINAL SURVEY		BY	DATE
NOTE BOOK	SURVEYED		
	PLOTTED		
	TEMPLATE		
	AREAS		
NO.	AREAS CHECKED		

ORIGINAL SURVEY		BY	DATE
NOTE BOOK	SURVEYED		
	PLOTTED		
	TEMPLATE		
	AREAS		
NO.	AREAS CHECKED		

MODEL: ExCL - 112+00.00 R2 [Sheet]
FILE NAME: P:\18-1072.03\57 over US 45 Phase\18-1072.03\dgn\CAD_Sheets\D570A87-sht-Xsec_1_10.dgn

Kaskaskia Engineering Group, LLC
PROFESSIONAL ASSOCIATIONS: Illinois Professional Design Firm, Professional Engineering Group
LICENSE NO.: 184.004773, 20-5980006

USER NAME = jwarner	DESIGNED -	REVISED -
	DRAWN -	REVISED -
PLOT SCALE = 0.16666633 ' / in.	CHECKED -	REVISED -
PLOT DATE = 3/24/2023	DATE -	REVISED -

STATE OF ILLINOIS
DEPARTMENT OF TRANSPORTATION

FAI 57 (I-57)
CROSS SECTIONS

SCALE: 1"=10' | SHEET 4 OF 17 SHEETS | STA. TO STA.

F.A.I. RTE.	SECTION	COUNTY	TOTAL SHEETS	SHEET NO.
57	(10-30)BR	CHAMPAIGN	107	94
		CONTRACT NO. 70A87		
	ILLINOIS	FED. AID PROJECT		

FINAL SURVEY		BY	DATE
NOTE BOOK	SURVEYED		
	PLOTTED		
	TEMPLATE		
	AREAS		
NO.	AREAS CHECKED		

ORIGINAL SURVEY		BY	DATE
NOTE BOOK	SURVEYED		
	PLOTTED		
	TEMPLATE		
	AREAS		
NO.	AREAS CHECKED		

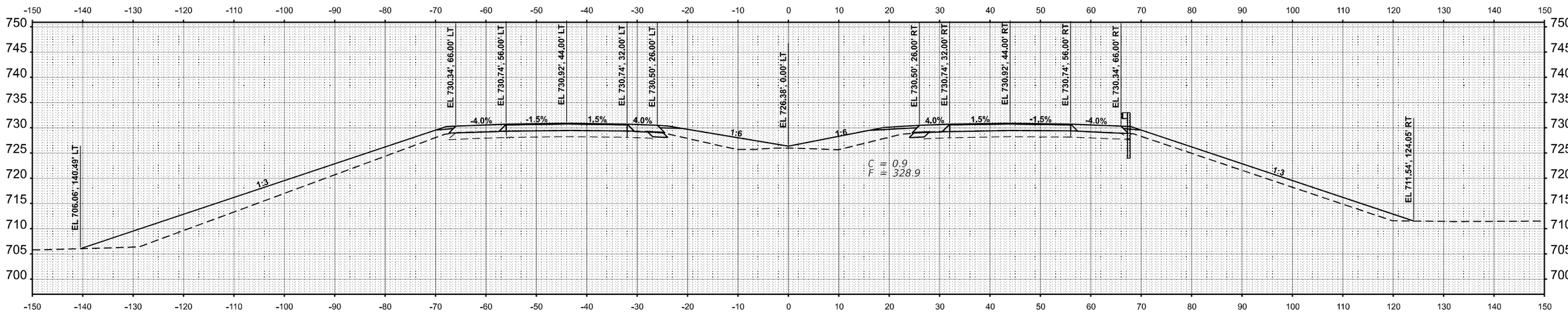

STA 114+00.00

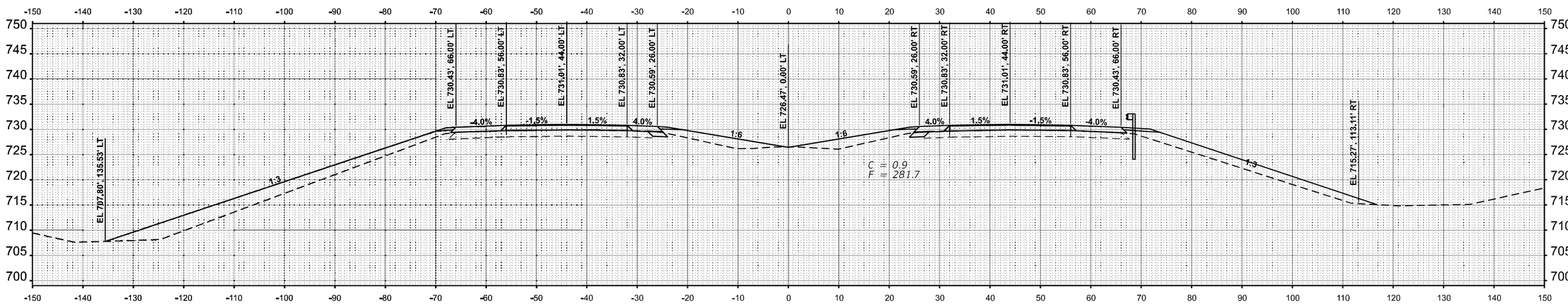

STA 113+50.00

MODEL: ExCL - 113+50.00 R2 [Sheet]
FILE NAME: P:\19-1072.03 I-57 over US 45 PI\2019-1072.03\dgn\CAD_Sheets\D570A87-sht-Xsec_10.dgn

Kaskaskia Engineering Group, LLC
PROFESSIONAL CERTIFICATIONS: Illinois Professional Design Firm, Professional Engineering Group
LICENSE NO.: 184.004773, 28-0000586
209 E. Main St., Suite 300, Belleville, Illinois 62220; 618.233.5677 phone; 618.233.5975 fax; www.kaskaskiaeng.com

USER NAME = jwarner	DESIGNED -	REVISED -
	DRAWN -	REVISED -
PLOT SCALE = 0.16666633 ' / in.	CHECKED -	REVISED -
PLOT DATE = 3/24/2023	DATE -	REVISED -

STATE OF ILLINOIS
DEPARTMENT OF TRANSPORTATION

FAI 57 (I-57)
CROSS SECTIONS

SCALE: 1"=10' | SHEET 5 OF 17 SHEETS | STA. | TO STA.

F.A.I. RTE.	SECTION	COUNTY	TOTAL SHEETS	SHEET NO.
57	(10-30)BR	CHAMPAIGN	107	95
		CONTRACT NO. 70A87		
	ILLINOIS	FED. AID PROJECT		

FINAL SURVEY		BY	DATE
NOTE BOOK	SURVEYED		
	PLOTTED		
	TEMPLATE		
	AREAS		
	AREAS CHECKED		
NO.			

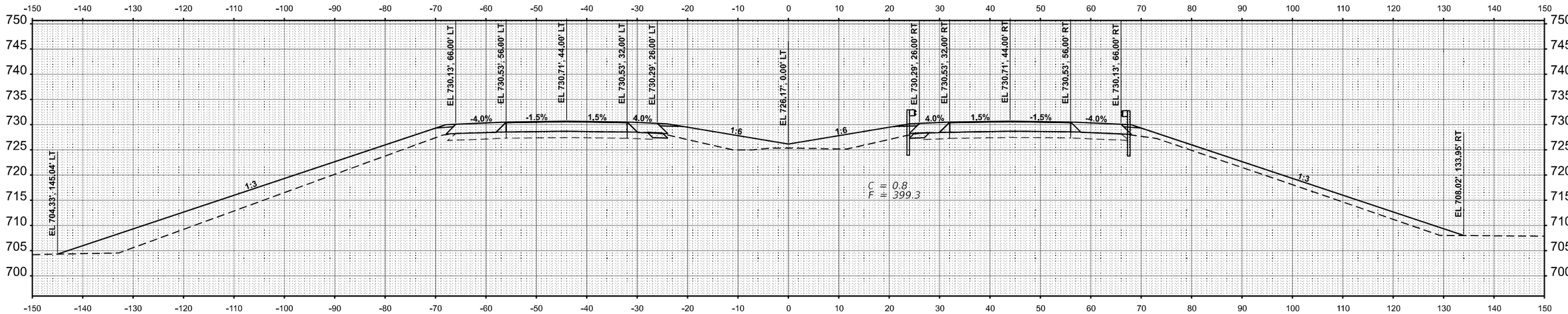

STA 115+00.00

ORIGINAL SURVEY		BY	DATE
NOTE BOOK	SURVEYED		
	PLOTTED		
	TEMPLATE		
	AREAS		
	AREAS CHECKED		
NO.			

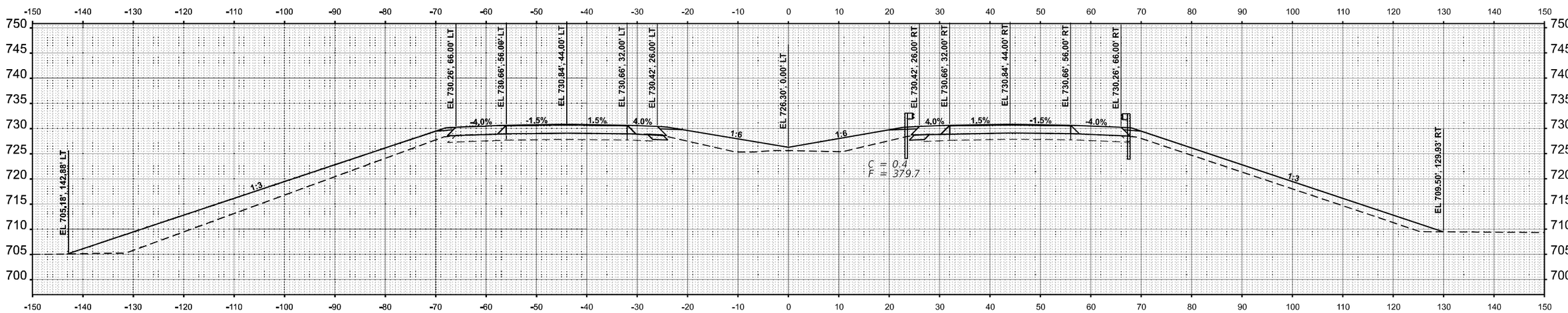

STA 114+50.00

MODEL: ExCL - 114+50.00 R2 [Sheet]
FILE NAME: P:\18-1072.03 I-57 over US 45 Ph2\18-1072.03\dgn\CAD_Sheets\D570A87-chi-Xsect_10.dgn

Kaskaskia Engineering Group, LLC
PROFESSIONAL ENGINEERING
Illinois Professional Design Firm 184.000708
Professional Engineering Group 20-500506
LICENSE EXP. 4/30/2023
299 E. Main St., Suite 300
Belleville, Illinois 62220
618.233.5677 phone
618.233.5675 fax
www.kaskaskiaeng.com

USER NAME = jwarner	DESIGNED -	REVISED -	
	DRAWN -	REVISED -	
PLOT SCALE = 0.16666633 ' / in.	CHECKED -	REVISED -	
PLOT DATE = 3/24/2023	DATE -	REVISED -	

STATE OF ILLINOIS
DEPARTMENT OF TRANSPORTATION

FAI 57 (I–57)
CROSS SECTIONS

SCALE: 1"=10' | SHEET 6 OF 17 SHEETS | STA. TO STA.

F.A.I. RTE.	SECTION	COUNTY	TOTAL SHEETS	SHEET NO.
57	(10-30)BR	CHAMPAIGN	107	96
		CONTRACT NO. 70A87		
	ILLINOIS	FED. AID PROJECT		

FINAL SURVEY		BY	DATE
NOTE BOOK	SURVEYED		
	PLOTTED		
	TEMPLATE		
	AREAS		
NO.	AREAS CHECKED		

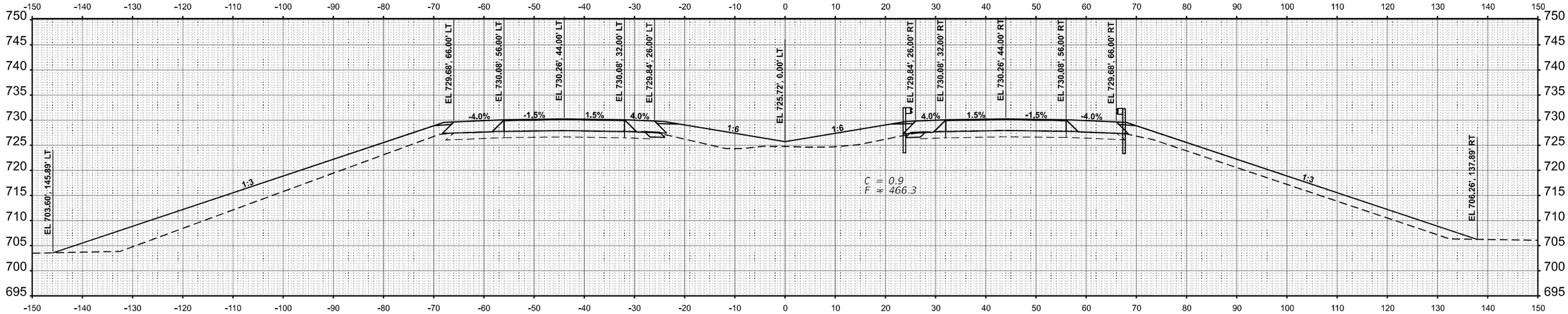

STA 116+00.00

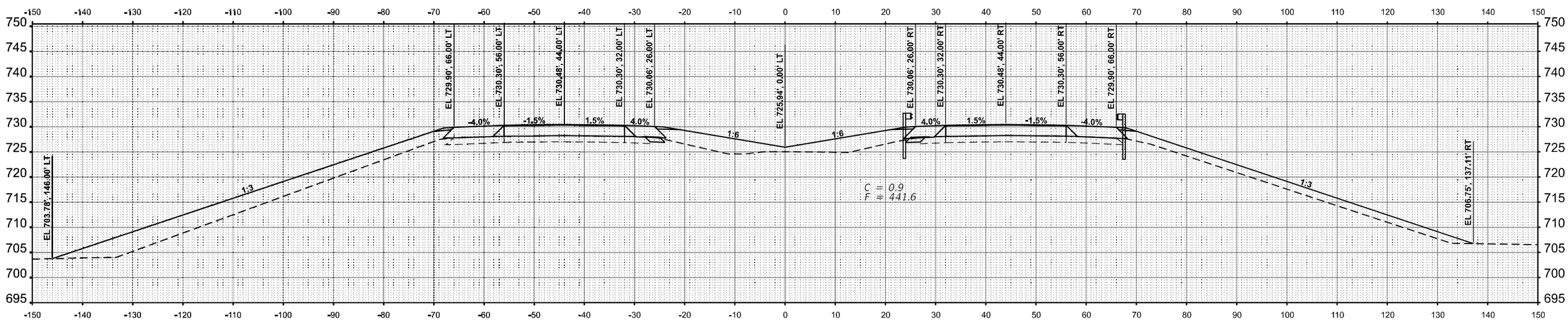

STA 115+56.30

ORIGINAL SURVEY		BY	DATE
NOTE BOOK	SURVEYED		
	PLOTTED		
	TEMPLATE		
	AREAS		
NO.	AREAS CHECKED		

MODEL: Ex\CL - 115+56.30 R2 [Sheet]
FILE NAME: P:\18-1072.03 I-57 over US 45 Ph2\18-1072.03\dgn\CAD_Sheets\D570A87-chxXsecs_10.dgn

Kaskaskia Engineering Group, LLC
PROFESSIONAL REGISTRATIONS: Illinois Professional Design Firm 184.004770; Professional Engineering Group 20-1010586
LICENSE NO.
209 E. Main St., Suite 300, Belleville, Illinois 62220; 618.233.5072 phone; 618.233.5077 fax; www.kaskaskiaeng.com

USER NAME = jwarner	DESIGNED -	REVISED -	
	DRAWN -	REVISED -	
PLOT SCALE = 0.16666633 ' / in.	CHECKED -	REVISED -	
PLOT DATE = 3/24/2023	DATE -	REVISED -	

STATE OF ILLINOIS
DEPARTMENT OF TRANSPORTATION

FAI 57 (I–57)
CROSS SECTIONS

SCALE: 1"=10' | SHEET 7 OF 17 SHEETS | STA. | TO STA.

F.A.I. RTE.	SECTION	COUNTY	TOTAL SHEETS	SHEET NO.
57	(10-30)BR	CHAMPAIGN	107	97
		CONTRACT NO. 70A87		
	ILLINOIS	FED. AID PROJECT		

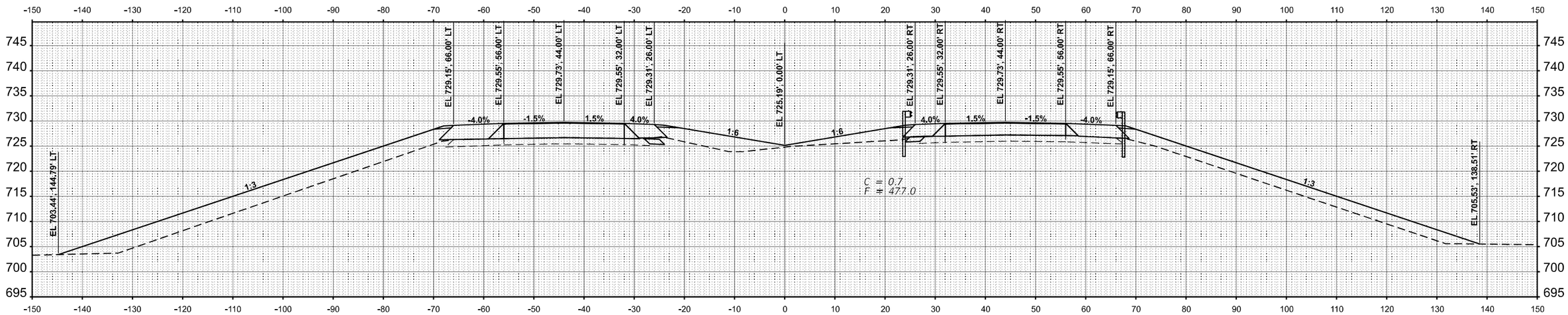

STA 116+80.00

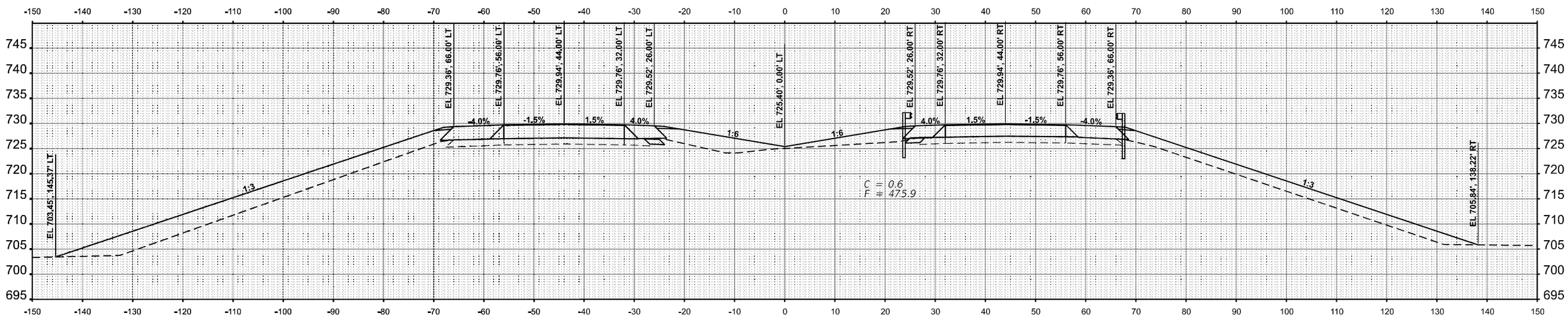

STA 116+50.00

FINAL SURVEY		BY	DATE
	SURVEYED		
	PLOTTED		
NOTE BOOK	TEMPLATE		
	AREAS		
NO.	AREAS CHECKED		

ORIGINAL SURVEY		BY	DATE
	SURVEYED		
	PLOTTED		
NOTE BOOK	TEMPLATE		
	AREAS		
NO.	AREAS CHECKED		

MODEL: ExCL = 116+50.00 R2 [Sheet]
FILE NAME: P:\16-1072.03 I-57 over US 45 Ph2\16-1072.03\dgn\CAD_Sheets\D570A87-xhcXsecL_10.dgn

Kaskaskia Engineering Group, LLC
299 E. Main St., Suite 300
Belleville, Illinois 62220
618-233-5877 phone
618-233-5877 fax
www.kaskaskiaeng.com
PROFESSIONAL ENGINEERING
Illinois Professional Design Firm
Professional Engineering Group
LICENSE NO.
184.004773
20-3100506

USER NAME = jwarner	DESIGNED -	REVISED -
	DRAWN -	REVISED -
PLOT SCALE = 0.16666633 ' / in.	CHECKED -	REVISED -
PLOT DATE = 3/24/2023	DATE -	REVISED -

STATE OF ILLINOIS
DEPARTMENT OF TRANSPORTATION

FAI 57 (I-57)
CROSS SECTIONS

SCALE: 1"=10' | SHEET 8 OF 17 SHEETS | STA. | TO STA.

F.A.I. RTE.	SECTION	COUNTY	TOTAL SHEETS	SHEET NO.
57	(10-30)BR	CHAMPAIGN	107	98
		CONTRACT NO. 70A87		
	ILLINOIS	FED. AID PROJECT		

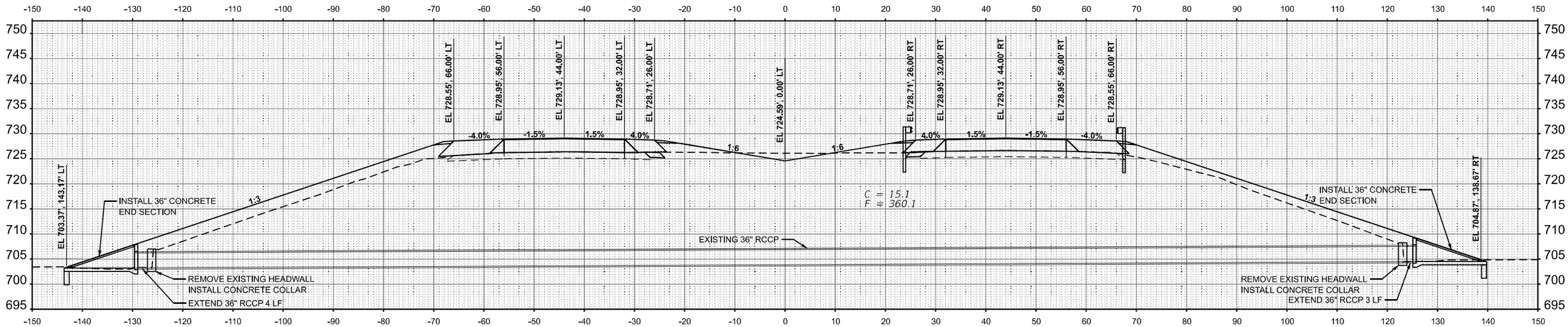

STA 117+51.52

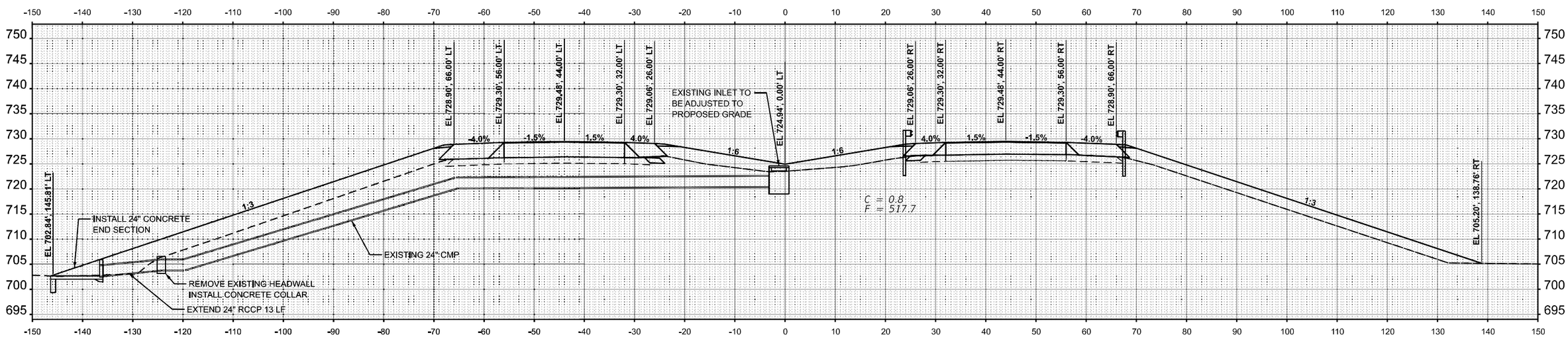

STA 117+11.27

FINAL SURVEY	BY	DATE
SURVEYED		
PLOTTED		
TEMPLATE		
AREAS		
AREAS CHECKED		
NOTE BOOK		
NO.		

ORIGINAL SURVEY	BY	DATE
SURVEYED		
PLOTTED		
TEMPLATE		
AREAS		
AREAS CHECKED		
NOTE BOOK		
NO.		

MODEL: Ex-Cs - 117+11.27 R2 [Sheet]
FILE NAME: P:\18-1072.03\457 over US 45 Ph2\18-1072.03\dgn\CAD_Sheets\D570A87-chtrXSect_10.dgn

Kaskaskia Engineering Group, LLC
PROFESSIONAL REGISTRATIONS: Illinois Professional Design Firm 184.004873; Professional Engineering Group 20-0040566
LICENSE NO.
209 S. Main St., Suite 300, Decatur, IL 62523
618.233.5677 phone
618.233.5677 fax
www.kaskaskiaeng.com

USER NAME = jwarner	DESIGNED -	REVISED -	
	DRAWN -	REVISED -	
PLOT SCALE = 0.16666633 ' / in.	CHECKED -	REVISED -	
PLOT DATE = 3/24/2023	DATE -	REVISED -	

STATE OF ILLINOIS
DEPARTMENT OF TRANSPORTATION

FAI 57 (I–57)
CROSS SECTIONS

SCALE: 1"=10' | SHEET 9 OF 17 SHEETS | STA. | TO STA.

F.A.I. RTE.	SECTION	COUNTY	TOTAL SHEETS	SHEET NO.
57	(10-30)BR	CHAMPAIGN	107	99
		CONTRACT NO. 70A87		
		ILLINOIS	FED. AID PROJECT	

FINAL SURVEY		BY	DATE
NOTE BOOK	SURVEYED		
	PLOTTED		
	TEMPLATE		
	AREAS		
NO.	AREAS CHECKED		

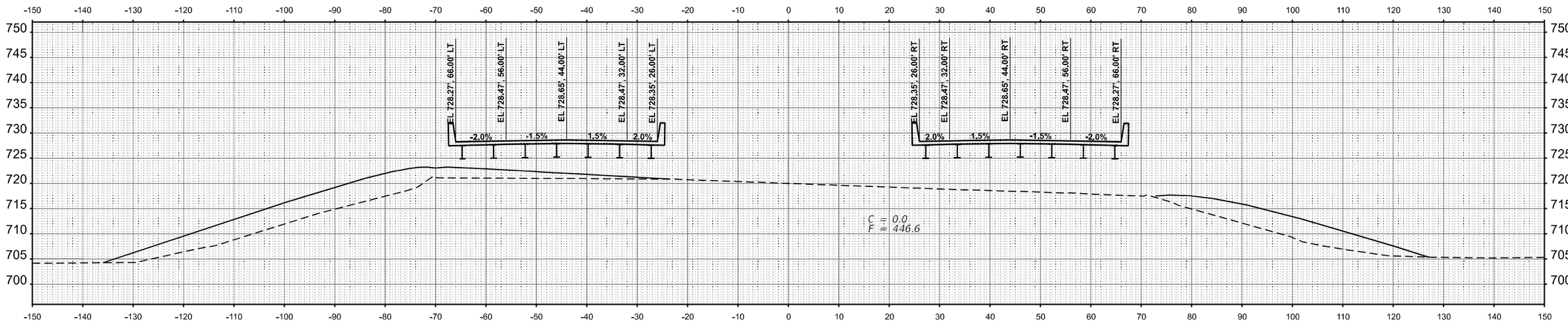

STA 118+00.00

ORIGINAL SURVEY		BY	DATE
NOTE BOOK	SURVEYED		
	PLOTTED		
	TEMPLATE		
	AREAS		
NO.	AREAS CHECKED		

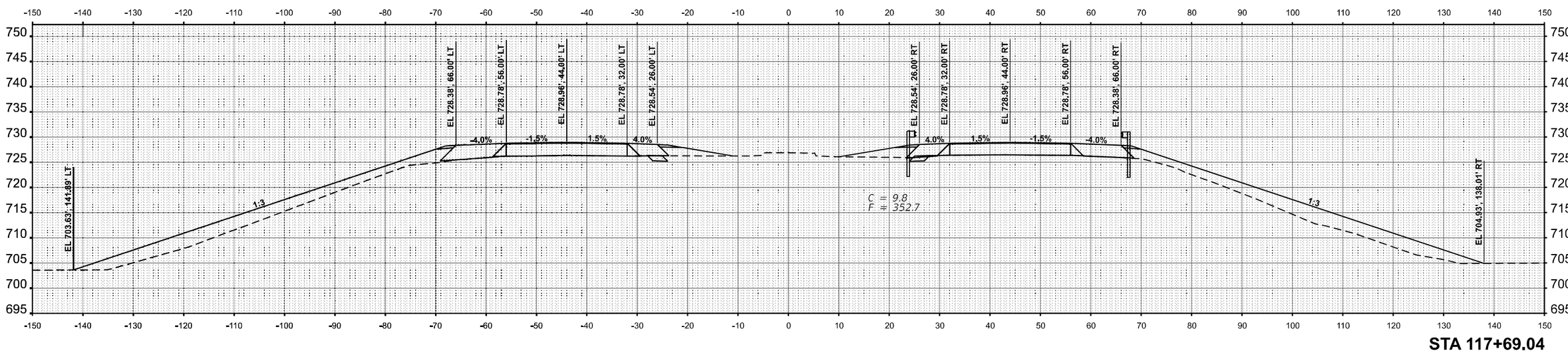

STA 117+69.04

MODEL: ExCL - 117+69.04 R2 [Sheet]
FILE NAME: P:\18-1072.03 I-57 over US 45 Ph2\18-1072.03\dgn\CAD_Sheets\D570A87-sht-Xsect_10.dgn

Kaskaskia Engineering Group, LLC
PROFESSIONAL ENGINEERING
Illinois Professional Design Firm 184.000708
Professional Engineering Group 20-500506
LICENSE EXP. 4/30/2023
299 E. Main St., Suite 300
Belleville, Illinois 62220
618.233.5677 phone
618.233.8371 fax
www.kaskaskiaeng.com

USER NAME = jwarner	DESIGNED -	REVISED -	
	DRAWN -	REVISED -	
PLOT SCALE = 0.16666633 ' / in.	CHECKED -	REVISED -	
PLOT DATE = 3/24/2023	DATE -	REVISED -	

STATE OF ILLINOIS
DEPARTMENT OF TRANSPORTATION

FAI 57 (I-57)
CROSS SECTIONS

SCALE: 1"=10' | SHEET 10 OF 17 SHEETS | STA. TO STA.

F.A.I. RTE.	SECTION	COUNTY	TOTAL SHEETS	SHEET NO.
57	(10-30)BR	CHAMPAIGN	107	100
		CONTRACT NO. 70A87		
	ILLINOIS	FED. AID PROJECT		

FINAL SURVEY		BY	DATE
NOTE BOOK NO.	SURVEYED		
	PLOTTED		
	TEMPLATE		
	AREAS		
	AREAS CHECKED		

ORIGINAL SURVEY		BY	DATE
NOTE BOOK NO.	SURVEYED		
	PLOTTED		
	TEMPLATE		
	AREAS		
	AREAS CHECKED		

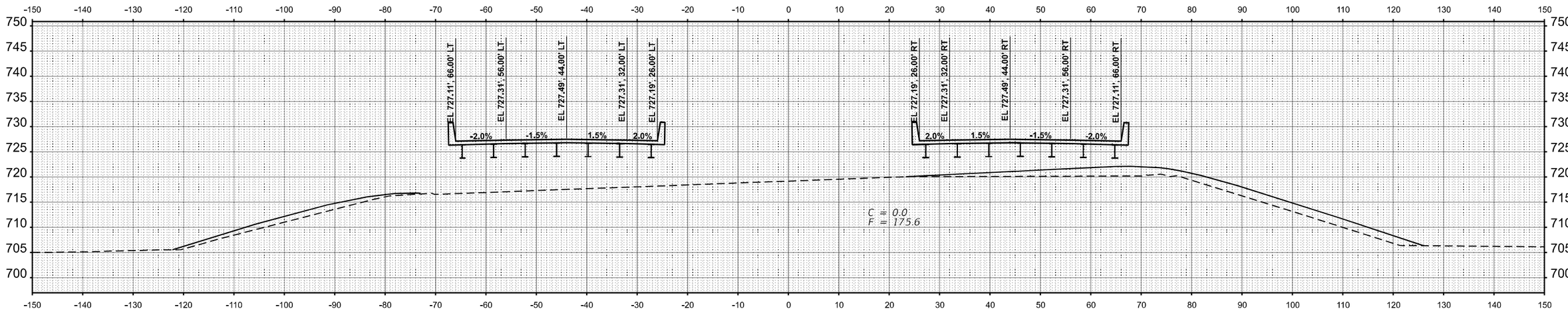

STA 119+00.00

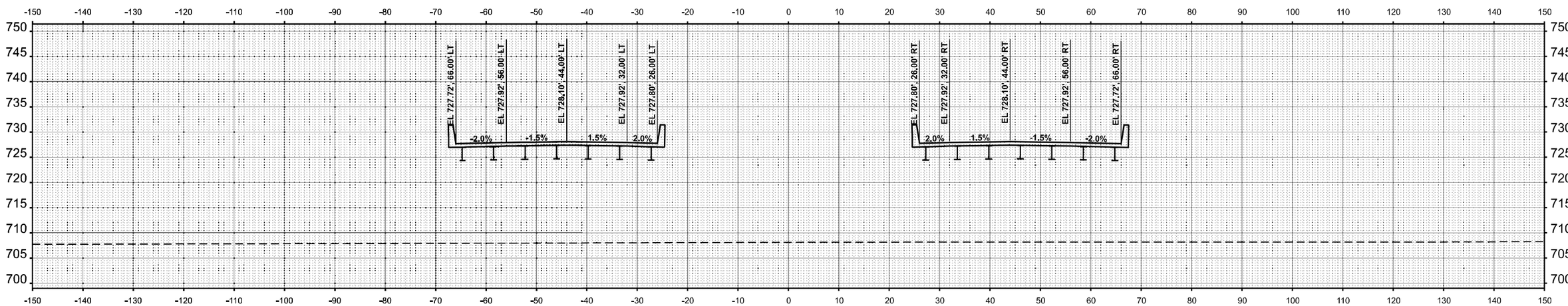

STA 118+50.00

MODEL: Ex-CL - 118+50.00 R2 [Sheet]
FILE NAME: P:\18-1072.03-I-57 over US 45 Ph2\18-1072.03\dgn\CAD_Sheets\D570A87-sht-XSect_L10.dgn

Kaskaskia Engineering Group, LLC
PROFESSIONAL REGISTRATIONS: 184.004873 Illinois Professional Design Firm; 28-0040986 Professional Engineering Group
209 W. Main St., Suite 300, P.O. Box 181 Danville 61832
618.233.5677 phone; 618.233.5677 fax; www.kaskaskiaeng.com

USER NAME = jwarner	DESIGNED -	REVISED -
	DRAWN -	REVISED -
PLOT SCALE = 0.16666633 ' / in.	CHECKED -	REVISED -
PLOT DATE = 3/24/2023	DATE -	REVISED -

STATE OF ILLINOIS
DEPARTMENT OF TRANSPORTATION

FAI 57 (I-57)
CROSS SECTIONS

SCALE: 1"=10' | SHEET 11 OF 17 SHEETS | STA. | TO STA.

F.A.I. RTE.	SECTION	COUNTY	TOTAL SHEETS	SHEET NO.
57	(10-30)BR	CHAMPAIGN	107	101
		CONTRACT NO. 70A87		
		ILLINOIS	FED. AID PROJECT	

FINAL SURVEY		BY	DATE
NOTE BOOK	SURVEYED		
	PLOTTED		
	TEMPLATE		
	AREAS		
NO.	AREAS CHECKED		

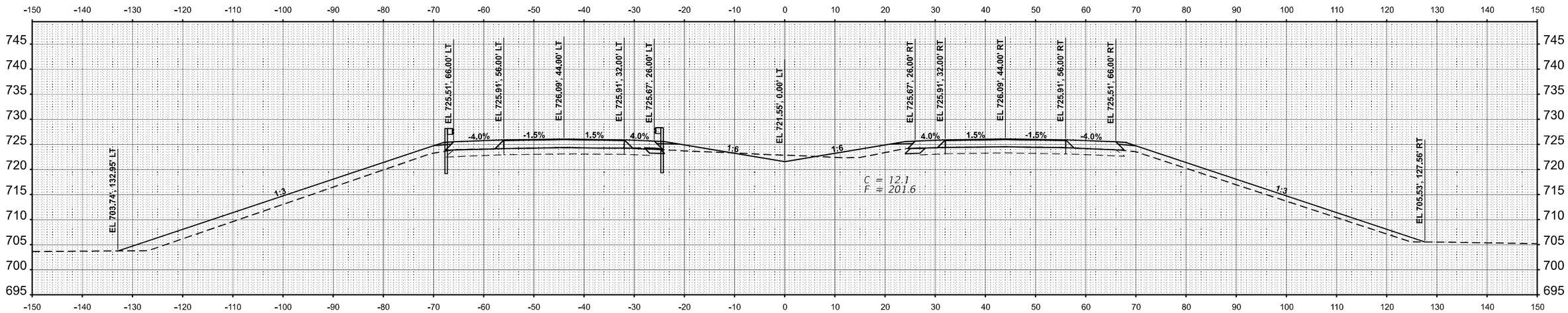

STA 120+00.00

ORIGINAL SURVEY		BY	DATE
NOTE BOOK	SURVEYED		
	PLOTTED		
	TEMPLATE		
	AREAS		
NO.	AREAS CHECKED		

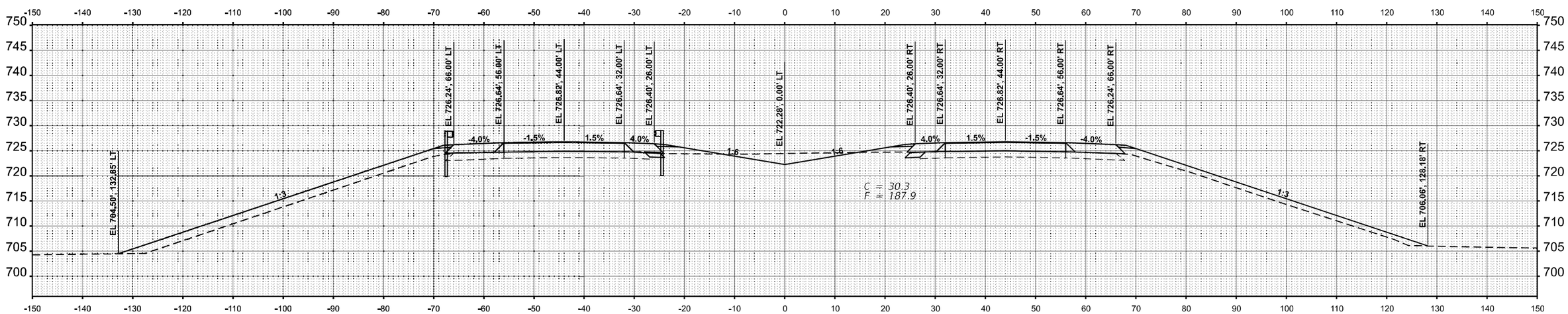

STA 119+50.00

MODEL: ExCL = 119+50.00 R2 [Sheet]
FILE NAME: P:\18x1072.03\dgn\CAD_Sheets\D570A87-xhcXsecL_10.dgn

Kaskaskia Engineering Group, LLC
299 E. Main St., Suite 300
Belleville, Illinois 62220
618-233-5877 phone
618-233-5877 fax
www.kaskaskiaeng.com
PROFESSIONAL ENGINEERING
Illinois Professional Design Firm
Professional Engineering Group
LICENSE NO.
184.004773
20-3100506

USER NAME = jwarner	DESIGNED -	REVISED -
	DRAWN -	REVISED -
PLOT SCALE = 0.16666633 ' / in.	CHECKED -	REVISED -
PLOT DATE = 3/24/2023	DATE -	REVISED -

STATE OF ILLINOIS
DEPARTMENT OF TRANSPORTATION

FAI 57 (I–57)
CROSS SECTIONS

SCALE: 1"=10' | SHEET 12 OF 17 SHEETS | STA. | TO STA.

F.A.I. RTE.	SECTION	COUNTY	TOTAL SHEETS	SHEET NO.
57	(10-30)BR	CHAMPAIGN	107	102
		CONTRACT NO. 70A87		
	ILLINOIS	FED. AID PROJECT		

FINAL SURVEY		BY	DATE
NOTE BOOK	SURVEYED		
	PLOTTED		
	TEMPLATE		
	AREAS		
NO.	AREAS CHECKED		

ORIGINAL SURVEY		BY	DATE
NOTE BOOK	SURVEYED		
	PLOTTED		
	TEMPLATE		
	AREAS		
NO.	AREAS CHECKED		

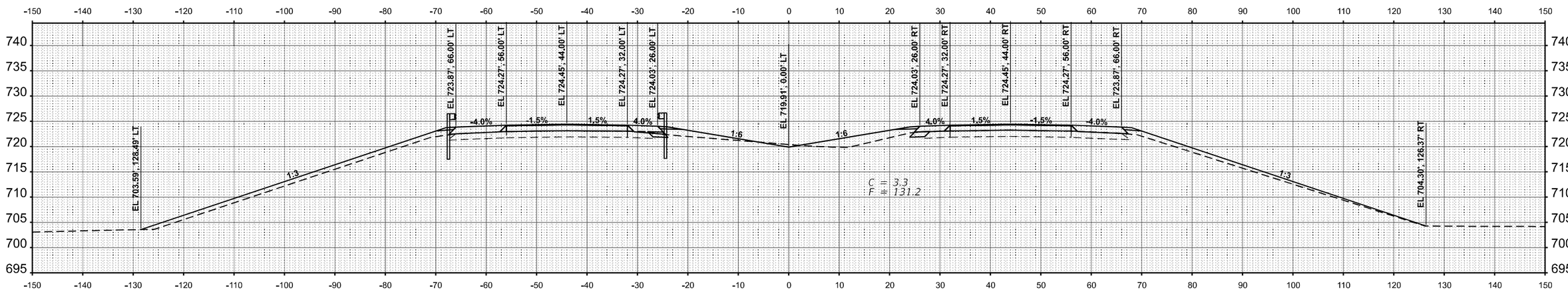

STA 121+00.00

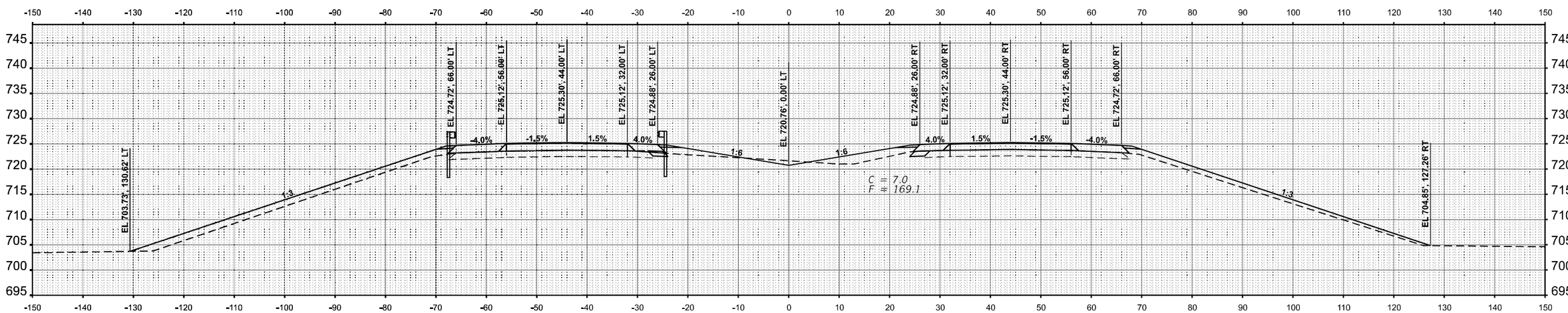

STA 120+50.00

MODEL: ExQL - 120+50.00 R2 [Sheet]
FILE NAME: P:\16-1072.03 I-57 over US 45 PI\2\16-1072.03\dgn\CAD_Sheets\D570A87-chi-Xsec_10.dgn

Kaskaskia Engineering Group, LLC
299 E. Main St., Suite 300
Belleville, Illinois 62220
618.233.5077 phone
618.233.5077 fax
www.kaskaskiaeng.com
PROFESSIONAL ENGINEER LICENSE NO.
Illinois Professional Design Firm 184.004775
Professional Engineering Group 20-1010586

USER NAME = jwarner	DESIGNED -	REVISED -
	DRAWN -	REVISED -
PLOT SCALE = 0.16666633 ' / in.	CHECKED -	REVISED -
PLOT DATE = 3/24/2023	DATE -	REVISED -

STATE OF ILLINOIS
DEPARTMENT OF TRANSPORTATION

FAI 57 (I-57)
CROSS SECTIONS

SCALE: 1"=10' | SHEET 13 OF 17 SHEETS | STA. | TO STA.

F.A.I. RTE.	SECTION	COUNTY	TOTAL SHEETS	SHEET NO.
57	(10-30)BR	CHAMPAIGN	107	103

CONTRACT NO. 70A87

ILLINOIS | FED. AID PROJECT

FINAL SURVEY		BY	DATE
NOTE BOOK	SURVEYED		
	PLOTTED		
	TEMPLATE		
	AREAS		
NO.	AREAS CHECKED		

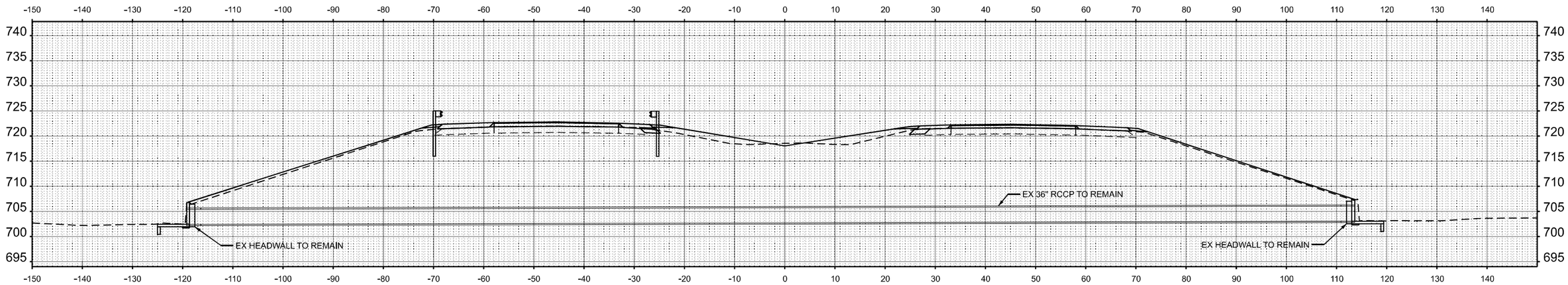

STA 122+00.00 (ALONG 36" CULVERT)

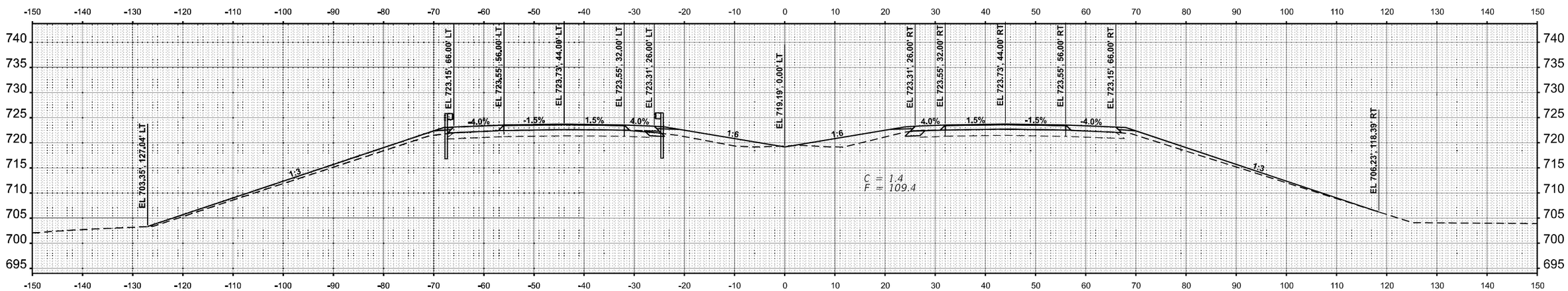

STA 121+40.00

ORIGINAL SURVEY		BY	DATE
NOTE BOOK	SURVEYED		
	PLOTTED		
	TEMPLATE		
	AREAS		
NO.	AREAS CHECKED		

MODEL: ExCu - 121+40.00 R2 [Sheet]
FILE NAME: P:\18-1072.03 I-57 over US 45 Ph2\18-1072.03\dgn\CAD_Sheets\D570A87-ch-XSect_10.dgn

Kaskaskia Engineering Group, LLC
PROFESSIONAL ENGINEERING
Illinois Professional Design Firm
Professional Engineering Group
299 E. Main St., Suite 300
Belleville, Illinois 62220
618.233.5677 phone
618.233.5682 fax
www.kaskaskiaeng.com
LICENSE NO.
184.004773
28-.0180506

USER NAME = jwarner	DESIGNED -	REVISED -	
	DRAWN -	REVISED -	
PLOT SCALE = 0.16666633 ' / in.	CHECKED -	REVISED -	
PLOT DATE = 3/24/2023	DATE -	REVISED -	

STATE OF ILLINOIS
DEPARTMENT OF TRANSPORTATION

FAI 57 (I-57)
CROSS SECTIONS

SCALE: 1"=10' | SHEET 14 OF 17 SHEETS | STA. | TO STA.

F.A.I. RTE.	SECTION	COUNTY	TOTAL SHEETS	SHEET NO.
57	(10-30)BR	CHAMPAIGN	107	104
		CONTRACT NO. 70A87		
		ILLINOIS	FED. AID PROJECT	

FINAL SURVEY		BY	DATE
	SURVEYED		
	PLOTTED		
	TEMPLATE		
NOTE BOOK	AREAS		
	AREAS CHECKED		
NO.			

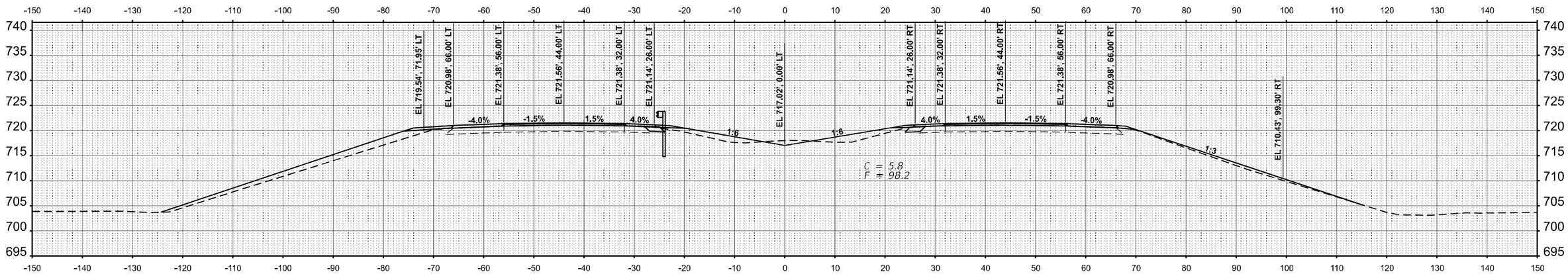

STA 122+50.00

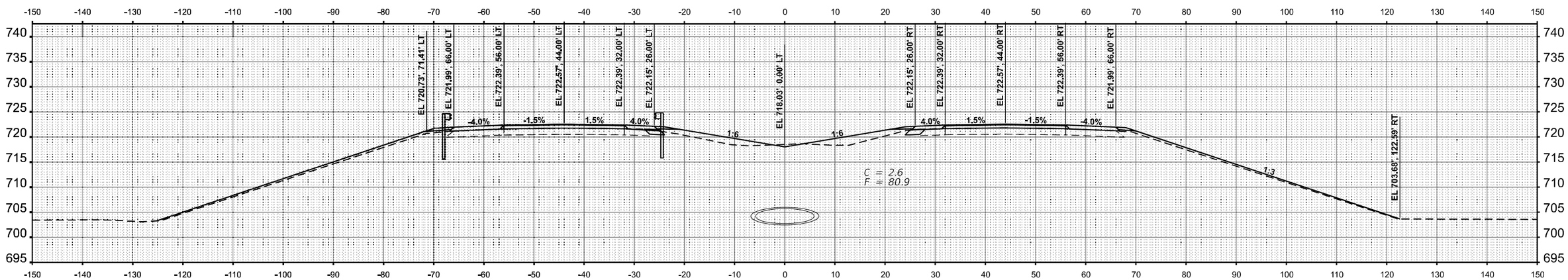

STA 122+00.00

ORIGINAL SURVEY		BY	DATE
	SURVEYED		
	PLOTTED		
	TEMPLATE		
NOTE BOOK	AREAS		
	AREAS CHECKED		
NO.			

MODEL: ExCL = 122+00.00 R2 [Sheet]
FILE NAME: P:\18x1072.03 I-57 over US 45 Ph2\18x1072.03\dgn\CAD_Sheets\D570A87-sht-XsecL_10.dgn

Kaskaskia Engineering Group, LLC
299 E. Main St., Suite 300
Belleville, Illinois 62220
618.233.5877 phone
618.233.5877 fax
www.kaskaskiaeng.com
PROFESSIONAL ENGINEERING
Illinois Professional Design Firm
Professional Engineering Group
LICENSE NO.
184.004773
20-3108506

USER NAME = jwarner	DESIGNED -	REVISED -
	DRAWN -	REVISED -
PLOT SCALE = 0.16666633 ' / in.	CHECKED -	REVISED -
PLOT DATE = 3/24/2023	DATE -	REVISED -

STATE OF ILLINOIS
DEPARTMENT OF TRANSPORTATION

FAI 57 (I-57)
CROSS SECTIONS

SCALE: 1"=10' | SHEET 15 OF 17 SHEETS | STA. | TO STA.

F.A.I. RTE.	SECTION	COUNTY	TOTAL SHEETS	SHEET NO.
57	(10-30)BR	CHAMPAIGN	107	105
		CONTRACT NO. 70A87		
		ILLINOIS	FED. AID PROJECT	

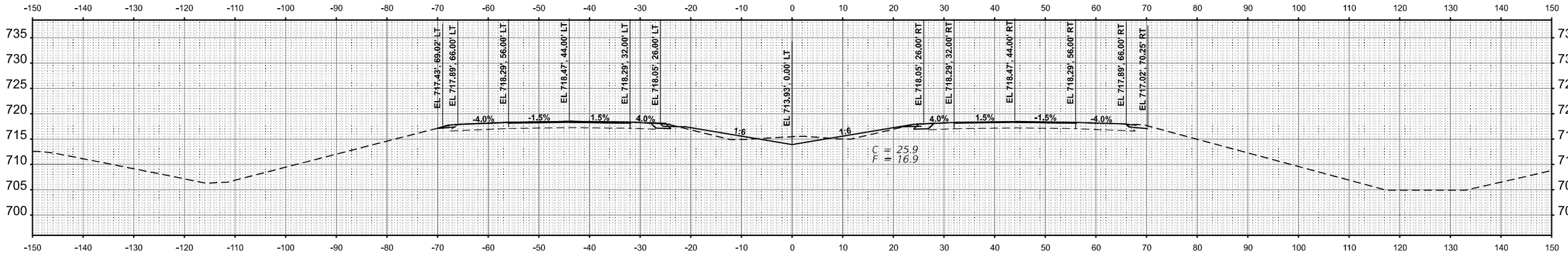

STA 124+02.58

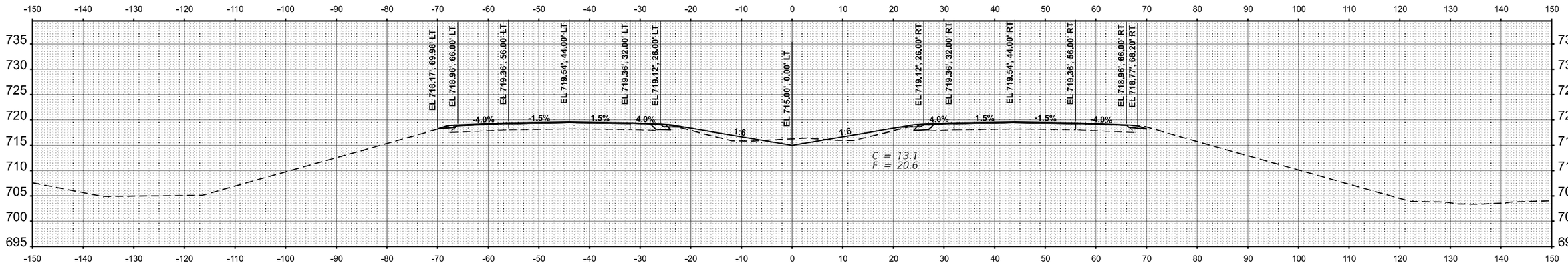

STA 123+50.00

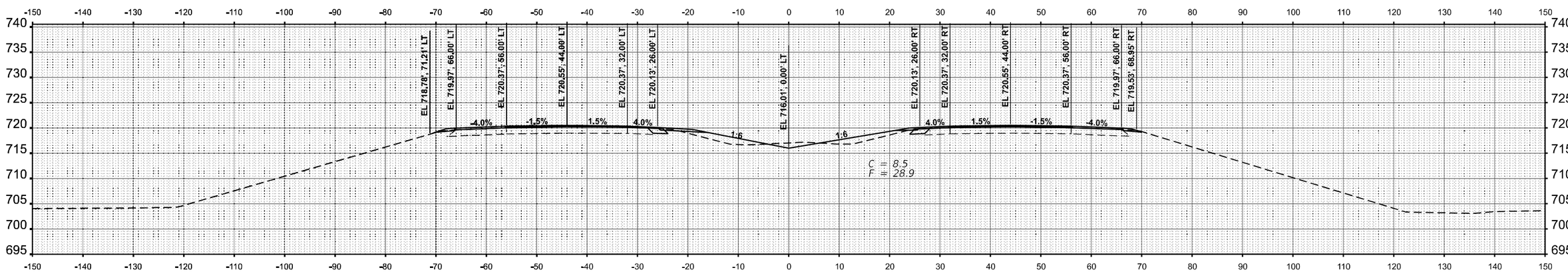

STA 123+00.00

FINAL SURVEY	BY	DATE
SURVEYED		
PLOTTED		
TEMPLATE		
AREAS		
AREAS CHECKED		
NOTE BOOK		
NO.		

ORIGINAL SURVEY	BY	DATE
SURVEYED		
PLOTTED		
TEMPLATE		
AREAS		
AREAS CHECKED		
NOTE BOOK		
NO.		

MODEL: Ex Cu - 123+00.00 R2 [Sheet]
FILE NAME: P:\18~1072.03\dgn\CAD_Sheets\D570A87~chXsect_10.dgn

Kaskaskia Engineering Group, LLC
PROFESSIONAL ENGINEERING
Illinois Professional Design Firm 184-000733
Professional Engineering Group 20-1980986

USER NAME = jwarner	DESIGNED -	REVISED -
	DRAWN -	REVISED -
PLOT SCALE = 0.16666633 ' / in.	CHECKED -	REVISED -
PLOT DATE = 3/24/2023	DATE -	REVISED -

STATE OF ILLINOIS
DEPARTMENT OF TRANSPORTATION

FAI 57 (I–57)
CROSS SECTIONS

SCALE: 1"=10' | SHEET 16 OF 17 SHEETS | STA. TO STA.

F.A.I. RTE.	SECTION	COUNTY	TOTAL SHEETS	SHEET NO.
57	(10-30)BR	CHAMPAIGN	107	106
		CONTRACT NO. 70A87		
	ILLINOIS	FED. AID PROJECT		

Benchmark: 5049-1, Chiseled square on Northwest corner of controller box foundation, in southeast quadrant of I-57 and U.S. 45. Sta. 1152+23.98; 50.29' RT. - Elevation 705.989.

S.N. 010-0198, 010-0199 Dual structures were built in 1963 as FAI Rte. 57, Section 10-30 HB at Station 118+50. The superstructure consists of a 7" reinforced concrete slab with a 2" concrete wearing surface on seven 27WF84 beams supported by two piers on pile-supported footings and stub abutments on concrete piles. The structures measure 121'-9" from back-to-back of abutments and 43'-8" out-to-out. The existing superstructure is to be removed and replaced and the existing substructure is to be repaired. Traffic is to be maintained using stage construction.

No salvage.

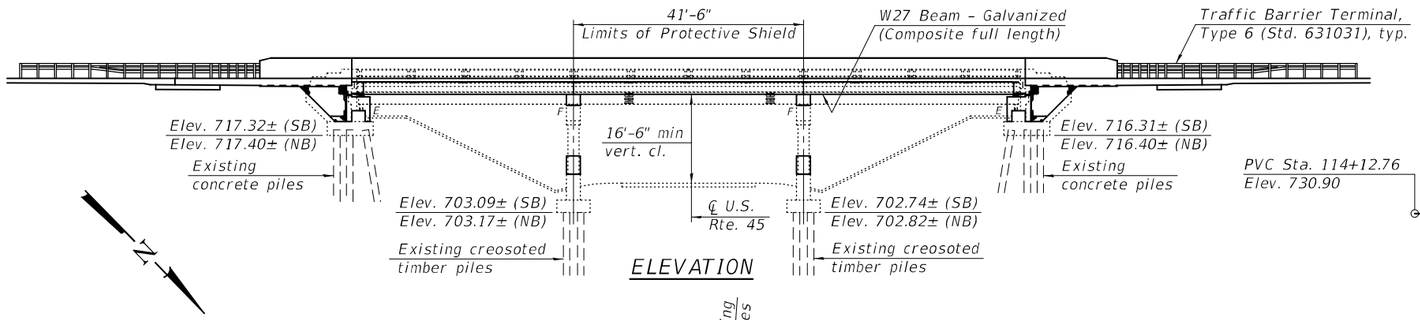

ELEVATION

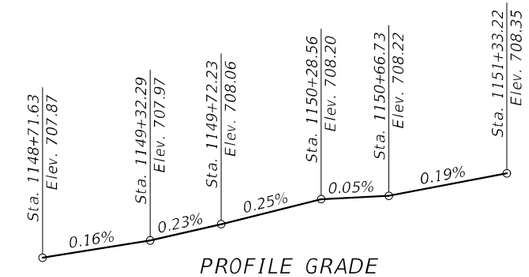

PROFILE GRADE

Along U.S. 45

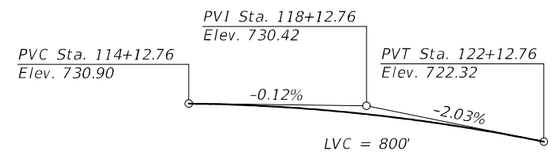

PROFILE GRADE

Along ℄ I-57

Notes:

Up to ¼" may be ground off the bridge deck and the bridge approach slabs.

The profile grade shows the final elevations after grinding.

DESIGN SPECIFICATIONS

(New Construction)
2020 AASHTO LRFD Bridge Design Specifications, 9th Edition

DESIGN STRESSES

FIELD UNITS (New Construction)

f'c = 3,500 psi
f'c = 4,000 psi (Superstructure Concrete)
fy = 50,000 psi (AASHTO M270 Grade 50)
fy = 60,000 psi (Reinforcement)
All Structural Steel shall be galvanized.

FIELD UNITS (Existing Construction)

f'c = 3,500 psi
fy = 40,000 psi (Reinforcement)

LOADING HL-93

Allow 50#/sq. ft. for future wearing surface.

SEISMIC DATA

Seismic Performance Category (SPC) = A
Horizontal Bedrock Acceleration Coefficient (A) = .048g
Site Coefficient (S) = 1.0

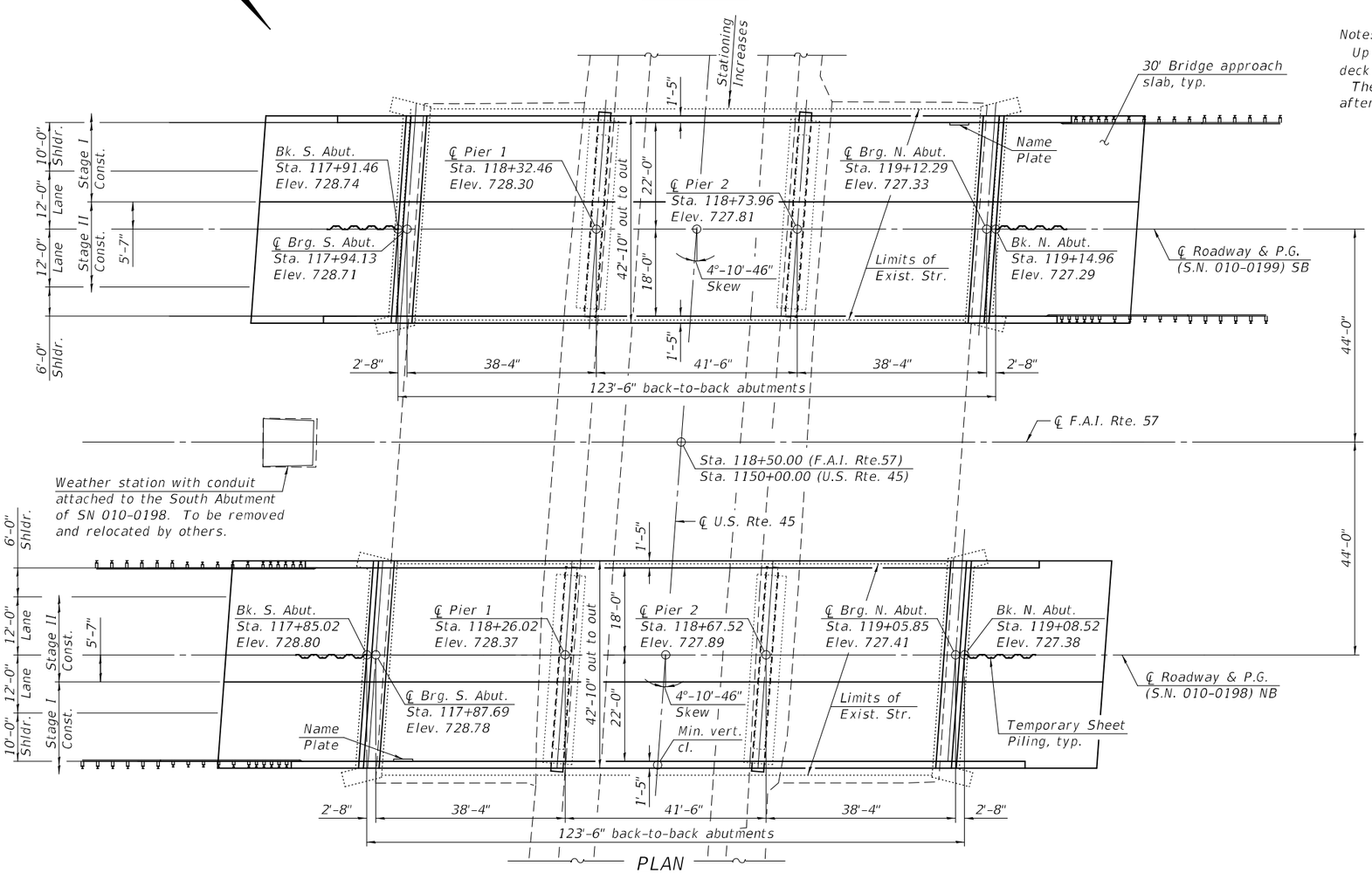

PLAN

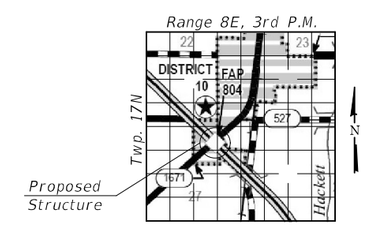

LOCATION SKETCH

EXPIRES 11-30-2024

GENERAL PLAN & ELEVATION
I-57 OVER U.S. RTE. 45
F.A.I. RTE. 57 - SEC (10-30)BR
CHAMPAIGN COUNTY
STATION 118+50.00
STRUCTURE NO. 010-0198 (NB)
STRUCTURE NO. 010-0199 (SB)

DESIGNED -	RYAN P. NEGANGARD	EXAMINED	ENGINEER OF BRIDGE DESIGN
CHECKED -	DAVID H. RICHTER	PASSED	ENGINEER OF BRIDGES AND STRUCTURES
DRAWN -	DENNIS A. POP	DATE -	5-16-2023
CHECKED -	R.P.N. / D.H.R. / G.R.A.	REVISED -	
		REVISED -	

STATE OF ILLINOIS
DEPARTMENT OF TRANSPORTATION

SHEET 1 OF 42 SHEETS

F.A.I. RTE.	SECTION	COUNTY	TOTAL SHEETS	SHEET NO.
57	(10-30)BR	CHAMPAIGN	107	40
		CONTRACT NO. 70A87		
		ILLINOIS	FED. AID PROJECT	

MODEL: 0100198-70A87-001
FILE NAME: pw:\\ildot-pw.bentley.com:PWIDOT\Documents\IDOT Offices\Bureau of Bridges and Structures\Projects\0100198\CADD Plans\0100198_70A87.dgn
5/16/2023 7:13:11 AM