06-16-2023 LETTING ITEM 130

F.A.I. RTE.	SECTION	COUNTY	TOTAL SHEETS	SHEET NO
94	FAI 90 / 94 22 BP	COOK	22	1
	ILLINOIS	CONTRACT NO. 62U18		

STATE OF ILLINOIS
DEPARTMENT OF TRANSPORTATION

D-91-011-23

LOCATION OF SECTION INDICATED THUS:-

FOR INDEX OF SHEETS, SEE SHEET NO. 2

TRAFFIC DATA

LOCATION 1
STRUCTURE NO. 016-1110 - SPAN 2 ONLY
I-90 /94 OVER 15TH TO 16TH STS
I-90 / 94:
2021 ADT = 239,000
SPEED LIMIT = 45 MPH

PROPOSED
HIGHWAY PLANS

FAI ROUTE 90 /94: I-90 /94 (DAN RYAN EXPWY)
OVER 15TH TO 16TH STS
PROJECT: NHPP-FBOY(506)
SECTION: FAI 90 /94 22 BP
BRIDGE PAINTING
COOK COUNTY
C-91-017-23

R 12 E | R 13 E | R 14 E

T 39 N

T 38 N

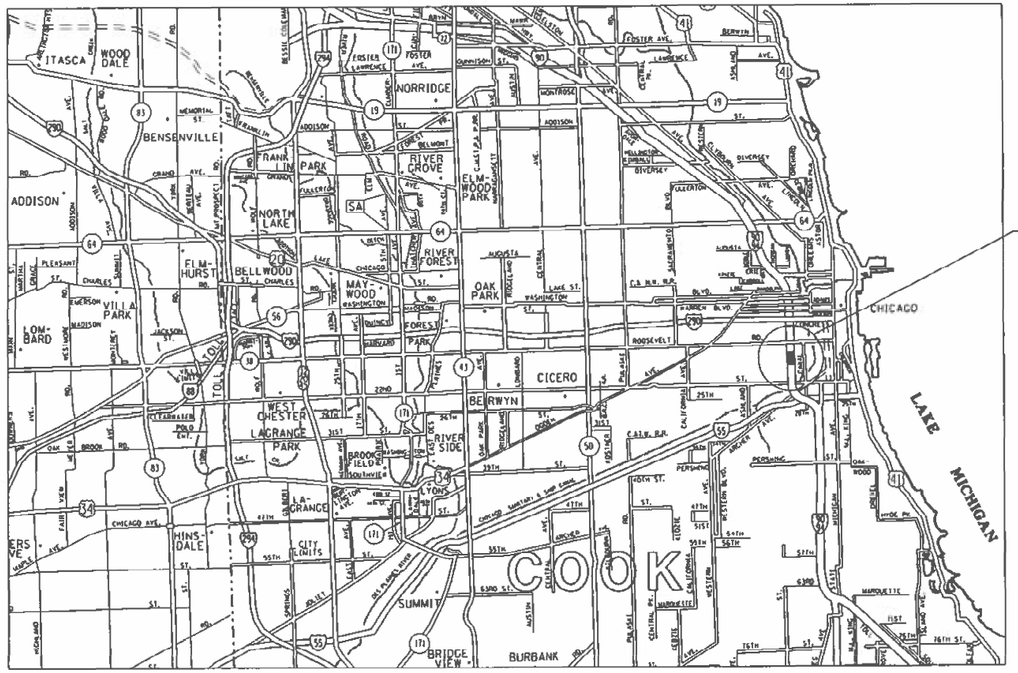

CHICAGO CITY TOWNSHIP

THIS IMPROVEMENT IS LOCATED IN THE CITY OF CHICAGO

0 100' 200' 300' — 1" = 100'
0 10' 20' 30' — 1" = 10'
0 50' 100' — 1" = 50'
0 50' 100' — 1" = 40'
0 50' 100' — 1" = 30'
0 50' 100' — 1" = 20'

FULL SIZE PLANS HAVE BEEN PREPARED USING STANDARD ENGINEERING SCALES. REDUCED SIZED PLANS WILL NOT CONFORM TO STANDARD SCALES. IN MAKING MEASUREMENTS ON REDUCED PLANS, THE ABOVE SCALES MAY BE USED.

C.U.A.N.
CHICAGO UTILITY ALERT NETWORK
1-312-744-7000

STATE OF ILLINOIS
DEPARTMENT OF TRANSPORTATION

SUBMITTED March 17 2023
REGIONAL ENGINEER
May 12, 2023
ENGINEER OF DESIGN AND ENVIRONMENT
May 12, 2023
DIRECTOR OF HIGHWAYS PROJECT IMPLEMENTATION

PROJECT ENGINEER: RODRIGO LEDEZMA (847) 705-4580
PROJECT MANAGER: J. ALAIN MIDY (847) 221-3056

CONTRACT NO. 62U18

PRINTED BY THE AUTHORITY OF THE STATE OF ILLINOIS

INDEX OF SHEETS

STATE STANDARDS

STANDARD NO.	DESCRIPTION
000001-08	STANDARD SYMBOLS, ABBREVIATIONS AND PATTERNS
701801-06	SIDEWALK, CORNER, OR CROSSWALK CLOSURE
701901-08	TRAFFIC CONTROL DEVICES

GENERAL NOTES

1. BEFORE STARTING ANY EXCAVATION, THE CONTRACTOR SHALL CALL "C.U.A.N." (CHICAGO UTILITY ALERT NETWORK) AT (312) 744-7000 FOR FIELD LOCATIONS OF BURIED ELECTRIC, TELEPHONE, AND GAS UTILITIES. (48 HOUR NOTIFICATION IS REQUIRED).
2. THE CONTRACTOR SHALL COORDINATE CONSTRUCTION ACTIVITIES WITH UTILITY COMPANIES AND THE CITY OF CHICAGO AND OBTAIN ALL NECESSARY PERMITS.
3. PLAN DIMENSIONS AND DETAILS RELATIVE TO EXISTING PLANS ARE SUBJECT TO NOMINAL CONSTRUCTION VARIATIONS. THE CONTRACTOR SHALL FIELD VERIFY EXISTING DIMENSIONS AND DETAILS AFFECTING NEW CONSTRUCTION AND MAKE NECESSARY APPROVED ADJUSTMENTS PRIOR TO CONSTRUCTION OR ORDERING OF MATERIALS. SUCH VARIATIONS SHALL NOT BE CAUSE FOR ADDITIONAL COMPENSATION FOR A CHANGE IN SCOPE OF THE WORK, HOWEVER, THE CONTRACTOR WILL BE PAID FOR THE QUANTITY ACTUALLY FURNISHED BASED AT THE UNIT PRICE BID FOR THE WORK.
4. THE CONTRACTOR WILL NOT BE ALLOWED TO SET UP A YARD OR FIELD OFFICE ON STATE PROPERTY WITHOUT WRITTEN PERMISSION FROM THE DEPARTMENT.
5. THESE PLANS HAVE BEEN PREPARED FROM NOTES RECEIVED FROM THE BUREAU OF MAINTENANCE BRIDGE INSPECTORS.
6. IT SHALL BE THE CONTRACTOR'S RESPONSIBILITY TO PROTECT AND MAINTAIN THE EXISTING BRIDGE LIGHTING AT ANY LOCATIONS THAT LIGHTING IS ENCOUNTERED ADJACENT TO AN AREA TO BE CLEANED AND PAINTED.
7. THE CONTRACTOR SHALL BE REQUIRED TO PROVIDE ACCESS TO ABUTTING PROPERTY AT ALL TIMES DURING THE CONSTRUCTION OF THIS PROJECT.
8. IT SHALL BE THE CONTRACTOR'S RESPONSIBILITY TO VERIFY ALL DIMENSIONS AND CONDITIONS EXISTING IN THE FIELD PRIOR TO CONSTRUCTION AND ORDERING OF MATERIALS.
9. WHEN ARTIFICIAL LIGHTING IS UTILIZED IN NIGHTTIME OPERATIONS, THE CONTRACTOR SHALL EXERCISE THE UTMOST PRECAUTIONS PREVENTING ADVERSE VISIBILITY TO THE MOTORING PUBLIC AND ADJACENT RESIDENTIAL AREAS.
10. THE CONTRACTOR SHALL TAKE NECESSARY PRECAUTIONS TO ENSURE THAT NO DEBRIS WILL ENDANGER OR INTERFERE WITH TRAFFIC ON THE RAILROAD BENEATH THE BRIDGE ACCORDING TO ARTICLE 107.12 OF THE STANDARD SPECIFICATIONS. THIS WORK WILL NOT BE PAID FOR SEPARATELY BUT SHALL BE INCLUDED IN THE CONTRACT UNIT PRICE FOR THE APPROPRIATE PAY ITEM INVOLVED AND NO ADDITIONAL COMPENSATION WILL BE ALLOWED.
11. THE CONTRACTOR SHALL TAKE NECESSARY PRECAUTIONS WHEN WORKING NEAR THE ABUTMENTS IF ELECTRICAL JUNCTIONS BOXES AND ATTACHED CONDUITS ARE PRESENT.
12. DO NOT SCALE PLANS FOR CONSTRUCTION DIMENSIONS.

GENERAL PAINT NOTES

1. ALL METALLIZING SHALL BE AS SPECIFIED IN THE SPECIAL PROVISIONS FOR "FIELD THERMAL SPRAYING METALLIZING"
2. ALL ITEMS (SUCH AS, BUT NOT LIMITED TO: CONDUITS, BRACKETS AND DECK DRAINS) ATTACHED TO OUTSIDE OF THE FASCIA BEAMS SHOULD BE CLEANED AND PAINTED.
3. FOR SN 016-1110 (SPAN 2 ONLY): ALL BEAMS, BEARINGS AND OTHER STRUCTURAL STEEL SHALL BE CLEANED PER NEAR WHITE BLAST SSPC-SP-10.
4. THESE AREAS SHALL BE PAINTED ACCORDING TO THE REQUIREMENTS OF PAINT SYSTEM 1 -OZ/E/U. THE COLOR OF THE FINAL FINISH COAT FOR ALL INTERIOR STEEL SURFACES SHALL BE GRAY, MUNSELL NO 5B 7/1. THE COLOR OF THE FINAL FINISH COAT FOR THE EXTERIOR AND BOTTOM FLANGE OF THE FASCIA BEAMS SHALL BE REDDISH BROWN, MUNSELL NO 2. 5YR 3/4.
5. A MINIMUM OF 2 AIR MONITORS AT SN 016-1110 WILL BE REQUIRED TO MONITOR ABRASIVE BLASTING OPERATIONS. SEE SPECIAL PROVISIONS FOR "CONTAINMENT AND DISPOSAL OF LEAD PAINT CLEANING RESIDUE".

SUMMARY OF QUANTITIES

	CODE NO	ITEM	UNIT	URBAN TOTAL QUANTITIES	CONSTRUCTION TYPE CODE: 0047 BRIDGE SN 016-1110 90% FED 10% STATE					
	67100100	MOBILIZATION	L SUM	1	1					
	70102640	TRAFFIC CONTROL AND PROTECTION, STANDARD 701801	L SUM	1	1					
	X0325381	FIELD THERMAL SPRAYING (METALLIZING) STRUCTURAL STEEL NO. 1	L SUM	1	1					
	X6700407	ENGINEER'S FIELD OFFICE, TYPE A (D1)	CAL MO	12	12					
	Z0007101	CONTAINMENT AND DISPOSAL OF LEAD PAINT	L SUM	1	1					
		CLEANING RESIDUES NO. 1								
	Z0048665	RAILROAD PROTECTIVE LIABILITY INSURANCE	L SUM	1	1					
Ø	Z0076600	TRAINEES	HOURS	500	500					
Ø	Z0076604	TRAINEES - TRAINING PROGRAM GRADUATE	HOURS	500	500					

SUMMARY OF QUANTITIES

CODE NO	ITEM	UNIT	TOTAL QUANTITIES	CONSTRUCTION TYPE CODE					

Ø 0042

FILE NAME = pw:\\Ildot-pw.bentley.com:PWIDOT\Documents\IDOT Offices\District 1\Projects\DIOW23\CADData\Design\DIOW23-str-SOQ.dgn	USER NAME = JacobRath	DESIGNED -	REVISED -	STATE OF ILLINOIS DEPARTMENT OF TRANSPORTATION	SUMMARY OF QUANTITIES	F.A.I. RTE.	SECTION	COUNTY	TOTAL SHEETS	SHEET NO.
		DRAWN -	REVISED -			94	FAI 90 / 94 22 BP	COOK	22	3
	PLOT SCALE = 100.0000 ' / In.	CHECKED -	REVISED -					CONTRACT NO. 62U18		
	PLOT DATE = 3/23/2023	DATE -	REVISED -		SCALE: NTS / SHEET NO. 1 OF 1 SHEETS / STA. TO STA.	FED. ROAD DIST. NO. 1	ILLINOIS	FED. AID PROJECT		

REV-SEP

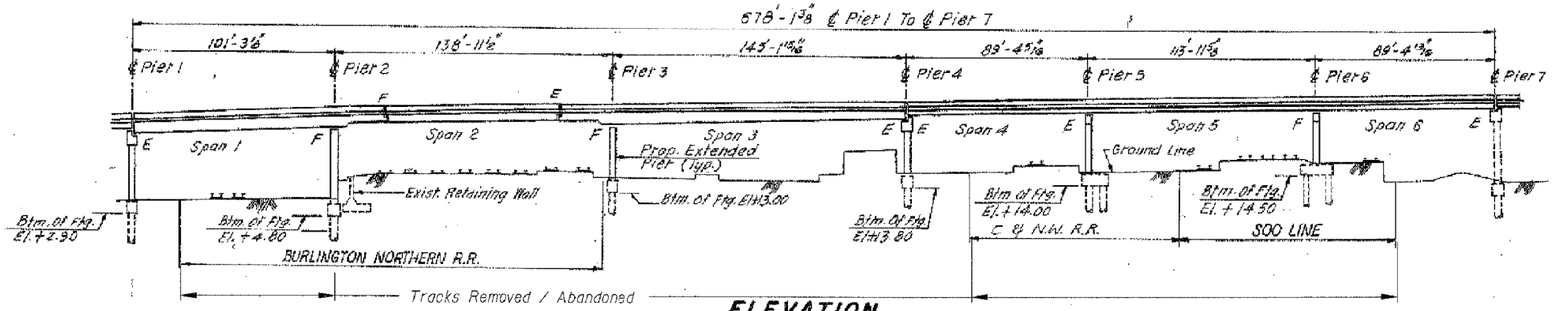

ELEVATION

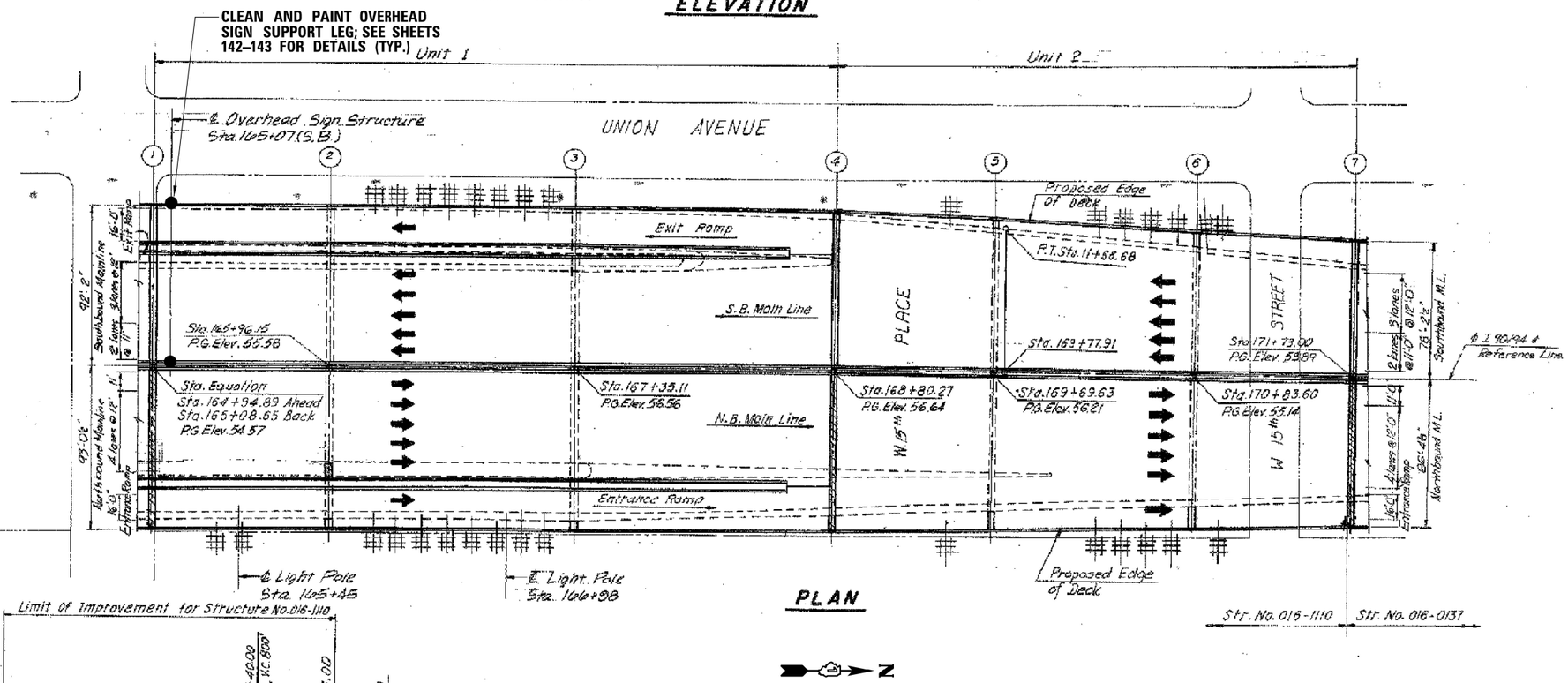

PLAN

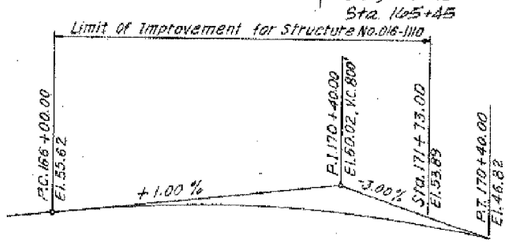

PROFILE GRADE

DAN RYAN EXPRESSWAY (I-90/94)

FOR INFORMATION ONLY

MODEL: Default
FILE NAME: pw:\\ildot-pw.bentley.com:PWIDOT\Documents\IDOT Offices\District 1\Projects\D101123\CADData\Design\D101123-sht-details.dgn

USER NAME = Jacob.Roth	DESIGNED -	REVISED -	STATE OF ILLINOIS DEPARTMENT OF TRANSPORTATION
	DRAWN -	REVISED -	
PLOT SCALE = 100.0000 ' / in.	CHECKED -	REVISED -	
PLOT DATE = 3/23/2023	DATE -	REVISED -	

GENERAL PLAN AND ELEVATION
STRUCTURE NO. 016–1110

SCALE: | SHEET OF SHEETS | STA. TO STA.

F.A.I. RTE.	SECTION	COUNTY	TOTAL SHEETS	SHEET NO.
94	FAI 90 / 94 22 BP	COOK	22	4
		CONTRACT NO. 62U18		
		ILLINOIS	FED. AID PROJECT	

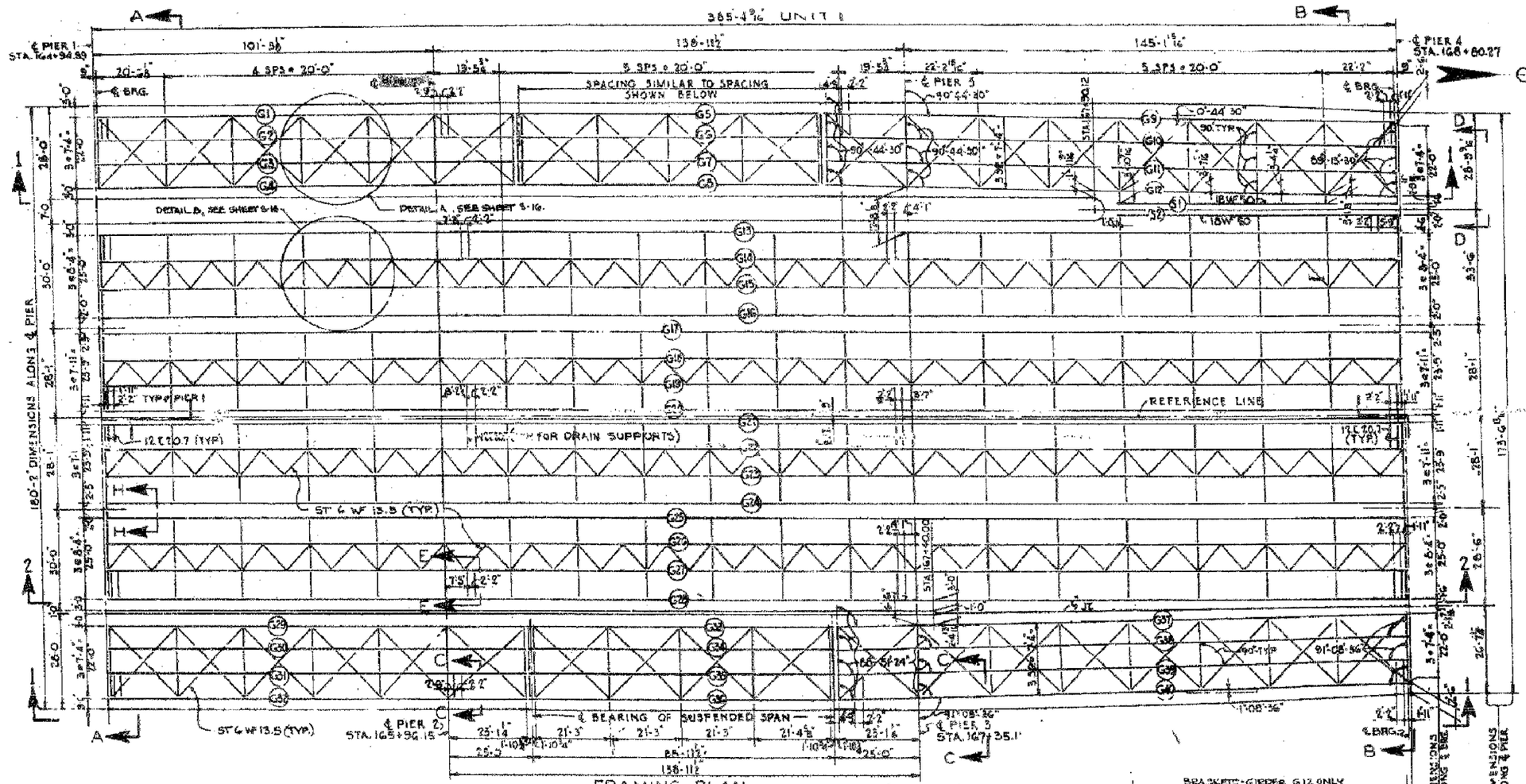

FRAMING PLAN

SCALE: 1/16"=1'-0"

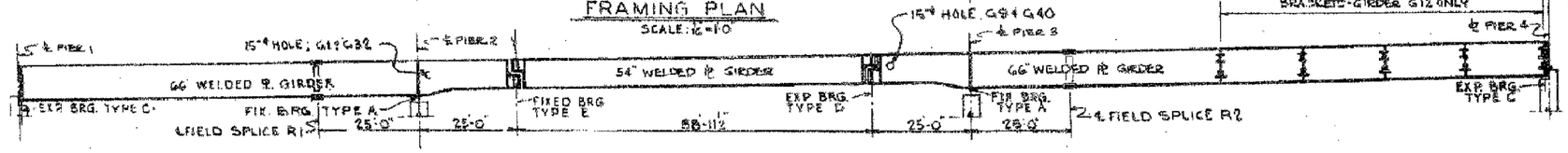

SECTION H-H

SCALES: VERT. 3/32"=1'-0", HORIZ. 1/16"=1'-0".

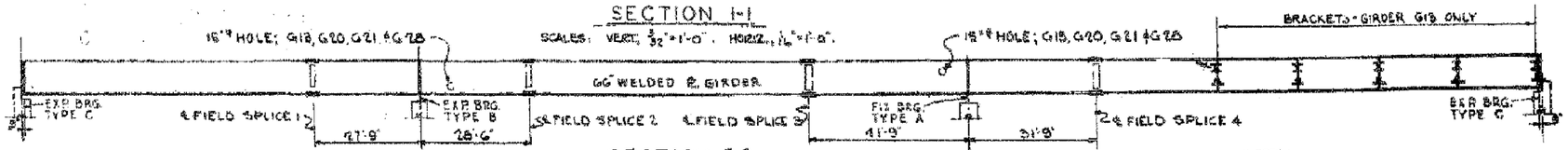

SECTION 2-2

SCALES: VERT. 3/32"=1'-0", HORIZ. 1/16"=1'-0"

STRUCTURAL STEEL NOTES

ALL FURNISHING, FABRICATING, TRANSPORTING, ERECTING AND PAINTING OF STRUCTURAL STEEL SHALL BE IN ACCORDANCE WITH SECTION 396 AND 506 OF THE STANDARD SPECIFICATIONS.

EXCEPT WHERE OTHERWISE NOTED, ALL STRUCTURAL STEEL SHALL CONFORM TO SPECIFICATIONS FOR STEEL FOR BRIDGES AND BUILDINGS ASTM DESIGNATION A-7 AND ASTM DESIGNATION A-373 AND WHERE APPLICABLE, TO THE REQUIREMENTS OF ARTICLE 126.2. AND 126.3 (a) OF THE STANDARD SPECIFICATIONS.

BEARING AND SPLICE NOTES:-

ALL GIRDER FIELD SPLICES SHALL BE SUB-PUNCHED, REAMED AND MATCHMARKED FOR SHIPMENT WHILE THE MEMBERS ARE SHOP ASSEMBLED IN PROPER ALIGNMENT, WITH OR WITHOUT DIAPHRAMS. ALL GIRDER FIELD SPLICES SHALL BE SUB-PUNCHED 11/16" ⌀, REAMED TO 13/16" ⌀ FOR 3/4" ⌀ BOLTS AND REAMED TO 15/16" ⌀ FOR 7/8" BOLTS.

ALL GIRDERS SHALL BE ERECTED FULL LENGTH IN THE SHOP BEFORE REAMING AND INSPECTION.

STRUCTURAL STEEL SHALL RECEIVE ONE SHOP COAT OF RED LEAD PAINT. PARTS INACCESSIBLE AFTER ERECTION SHALL HAVE TWO SHOP COATS OF RED LEAD PAINT. FOR ADDITIONAL SHOP AND FIELD PAINT COATS, SEE THE SPECIAL PROVISIONS.

ALL ROLLERS, ROCKERS, BOLSTERS, BEARING PLATES, LEAD PLATES, PINTLES, ANCHOR BOLTS AND SPLICES SHALL BE FABRICATED AND SET IN ACCORDANCE WITH ARTICLES 84.6 OF THE STANDARD SPECIFICATIONS AND SHALL BE FINISHED IN ACCORDANCE WITH ARTICLE 506.5(a). THESE ITEMS ARE INCLUDED IN THE WEIGHT OF STRUCTURAL STEEL.

SPLICE PLATES TO BE MATCH-MARKED FOR SHIPMENT.

ANCHOR BOLTS SHALL BE SET BEFORE BOLTING DIAPHRAGMS OVER PIERS AND ABUTMENTS.

FINISHED SURFACES OF BEARINGS AND ROLLERS SHALL BE TREATED WITH ANTI-RUST COMPOUND BEFORE SHIPMENT AS STATED IN ARTICLE 84.4 OF THE STANDARD SPECIFICATIONS.

ALL FIELD CONNECTIONS SHALL BE MADE WITH 3/4" ⌀ OR 7/8" ⌀ HIGH STRENGTH BOLTS AS INDICATED.

ALL RIVETS, UNLESS OTHERWISE SHOWN OR NOTED, SHALL BE 3/4" ⌀, OPEN HOLES 13/16" ⌀.

KEY PLAN

SUMMARY OF STRUCTURAL STEEL UNIT 1

ITEM	UNIT	QUANTITY ASTM A7	QUANTITY ASTM A709
GIRDERS	POUND	—	2,654,987
CROSS FRAMES	POUND	176,844	—
LATERAL BRACING	POUND	105,825	—
GIRDER BEARINGS	POUND	87,600	—
EXPANSION GUARDS	POUND	81,032	—
TOTAL	POUND	552,011	2,654,987

INCLUDED IN SUMMARY ON SHT. 21

Designed By N. S. W.
Drawn By W. C. K.
Checked By R. S.
In Charge N. S. WULF
Approved By L. N. RIAN

NOTES:
FOR GIRDER DETAILS, SEE SHEETS S-12 THRU S-16
FOR SECTIONS A-A, D-D, & E-E, SEE SHEET S-18
FOR SECTIONS C-C, D-D, & H-H, SEE SHEET S-16

FOR INFORMATION ONLY

MODEL: Default
FILE NAME: pw:\\ildot-pw.bentley.com:PWIDOT\Documents\IDOT Offices\District 1\Projects\D101123\CADData\Design\D101123-sht-details.dgn

USER NAME = Jacob.Roth	DESIGNED -	REVISED -	
	DRAWN -	REVISED -	
PLOT SCALE = 100.0000 ' / in.	CHECKED -	REVISED -	
PLOT DATE = 3/23/2023	DATE -	REVISED -	

STATE OF ILLINOIS
DEPARTMENT OF TRANSPORTATION

ORIGINAL FRAMING PLAN, SPAN 1–3
STRUCTURE NO. 016–1110

SCALE: SHEET OF SHEETS STA. TO STA.

F.A.I. RTE.	SECTION	COUNTY	TOTAL SHEETS	SHEET NO.
94	FAI 90 / 94 22 BP	COOK	22	5

CONTRACT NO. 62U18

ILLINOIS FED. AID PROJECT

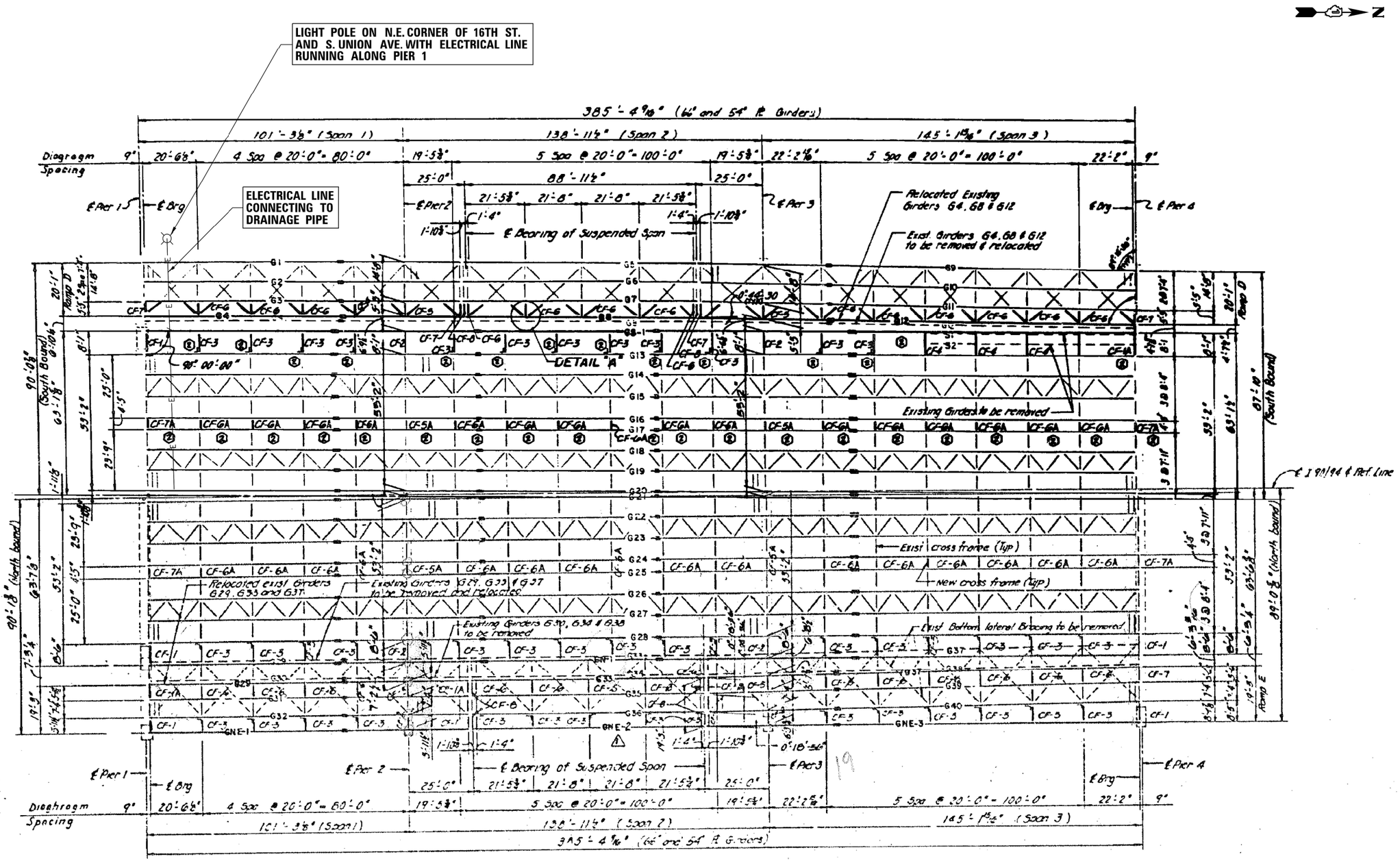

FRAMING PLAN

FOR INFORMATION ONLY

USER NAME = Jacob.Roth	DESIGNED -	REVISED -	STATE OF ILLINOIS DEPARTMENT OF TRANSPORTATION
	DRAWN -	REVISED -	
PLOT SCALE = 100.0000 ' / in.	CHECKED -	REVISED -	
PLOT DATE = 3/23/2023	DATE -	REVISED -	

FRAMING PLAN AFTER WIDENING, SPANS 1–3
STRUCTURE NO. 016–1110

SCALE: | SHEET OF SHEETS | STA. TO STA.

F.A.I. RTE.	SECTION	COUNTY	TOTAL SHEETS	SHEET NO.
94	FAI 90 / 94 22 BP	COOK	22	6
		CONTRACT NO. 62U18		
		ILLINOIS	FED. AID PROJECT	

MODEL: Default
FILE NAME: pw:\\ildot-pw.bentley.com:PWIDOT Documents\IDOT Offices\District 1\Projects\101123\CADData\Design\101123-hl-details.dgn

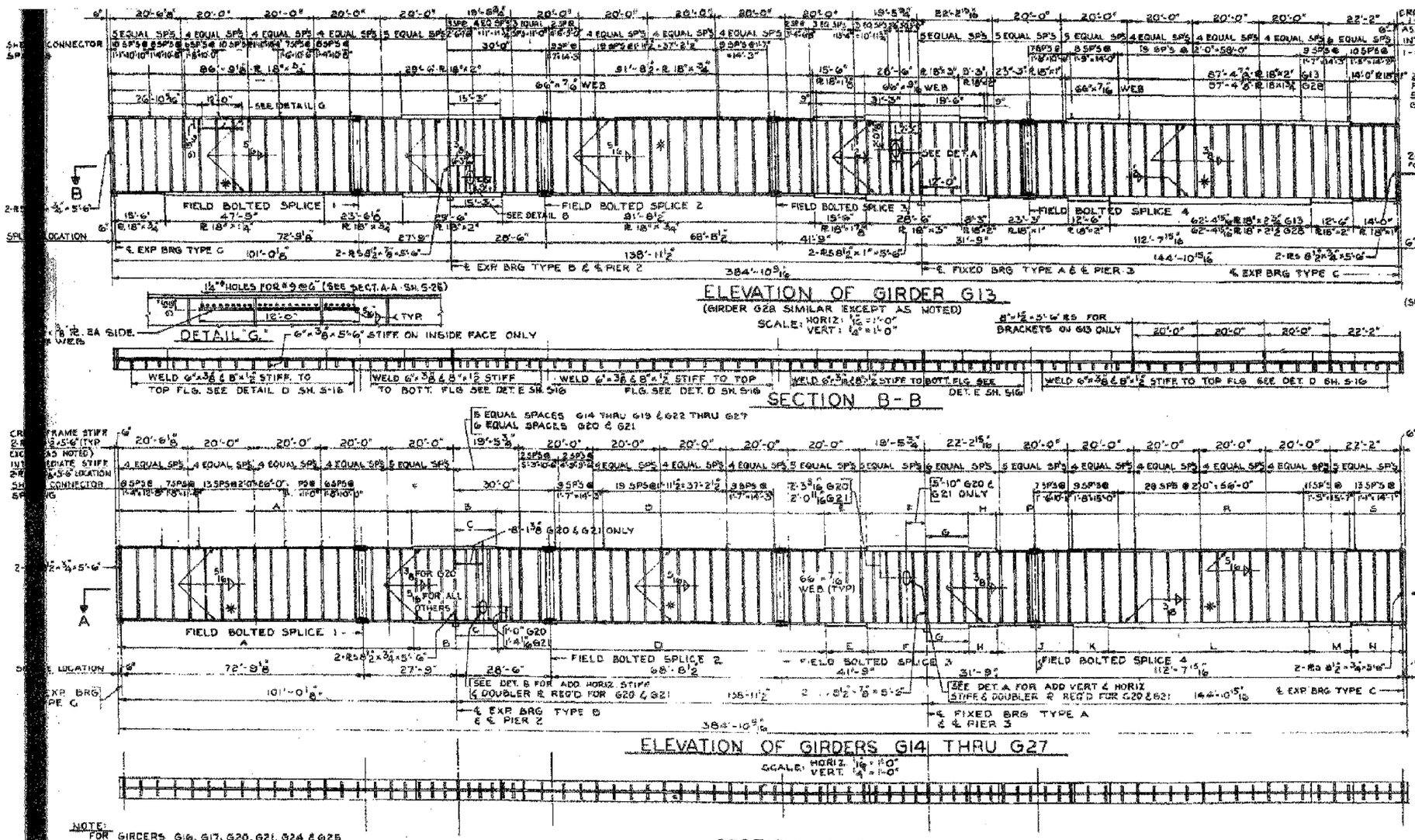

NOTE:
FOR GIRDERS G16, G17, G20, G21, G24 & G25
USE 1-8"×1/2×5'-6" STIFFENER ℞ AT CROSSFRAME
CONNECTIONS AND 1-6"×3/8×5'-6" STIFFENER ℞
WHERE NO CROSSFRAME CONNECTIONS ARE MADE.

WELDED PLATE GIRDER SCHEDULE

GIRDER	A	B	C	D	E	F	G	H	J	K	L	M	N	P	R	S
G13, G26 & G27	18"×3/4"×89'-5 5/8" ℞	18"×1 5/16"×23'-3" ℞	11'-6"	18"×3/4"×101'-5 1/2" ℞	18"×5/8"×12'-6" ℞	18"×2 1/2"×24'-6" ℞	11'-0"	18"×1 5/8"×10'-0" ℞	18"×1"×21'-0" ℞	18"×1 1/2"×9'-0" ℞	18"×2"×66'-10 7/16" ℞	18"×1 1/2"×9'-6" ℞	18"×1"×17'-0" ℞	18"×3/4"×21'-0" ℞	18"×1 5/8"×85'-4 15/16" ℞	18"×3/4"×17'-6" ℞
G14, G15 & G16 G22, G23, G24 & G25	18"×3/4"×80'-6 5/8" ℞	18"×1 1/4"×21'-0" ℞	10'-6"	18"×3/4"×103'-11 1/2" ℞	18"×1 1/2"×11'-6" ℞	18"×2 1/4"×23'-9" ℞	10'-8"	18"×1 1/2"×9'-3" ℞	18"×1"×23'-0" ℞	18"×1 1/2"×10'-0" ℞	18"×1 5/8"×62'-4 15/16" ℞	18"×1 1/2"×10'-0" ℞	18"×1"×12'-6" ℞	18"×3/4"×23'-0" ℞	18"×1 5/8"×82'-4 15/16" ℞	18"×3/4"×19'-6" ℞
	18"×3/4"×87'-6 5/8" ℞	18"×1 5/8"×27'-0" ℞	13'-6"	18"×3/4"×96'-11 1/2" ℞	18"×1 5/8"×12'-6" ℞	18"×2 3/4"×28'-9" ℞	12'-9"	18"×1 5/8"×9'-3" ℞	18"×1"×21'-0" ℞	18"×1 1/2"×8'-9" ℞	18"×1 5/8"×67'-7 15/16" ℞	18"×1 1/2"×8'-9" ℞	18"×1"×16'-9" ℞	18"×3/4"×21'-0" ℞	18"×1 5/8"×85'-1 15/16" ℞	18"×3/4"×16'-9" ℞

FOR INFORMATION ONLY

MODEL: Default
FILE NAME: pw:\\ildot-pw.bentley.com:PWIDOT\Documents\IDOT Offices\District 1\Projects\D101123\CADData\Design\D101123-sht-details.dgn

USER NAME = Jacob.Roth	DESIGNED -	REVISED -	STATE OF ILLINOIS DEPARTMENT OF TRANSPORTATION
	DRAWN -	REVISED -	
PLOT SCALE = 100.0000 ' / in.	CHECKED -	REVISED -	
PLOT DATE = 3/23/2023	DATE -	REVISED -	

ORIGINAL GIRDER G13–G27 DETAILS, SPANS 1–3
STRUCTURE NO. 016–1110

SCALE: | SHEET OF SHEETS | STA. | TO STA.

F.A.I. RTE.	SECTION	COUNTY	TOTAL SHEETS	SHEET NO.
94	FAI 90 / 94 22 BP	COOK	22	7
		CONTRACT NO. 62U18		
		ILLINOIS	FED. AID PROJECT	

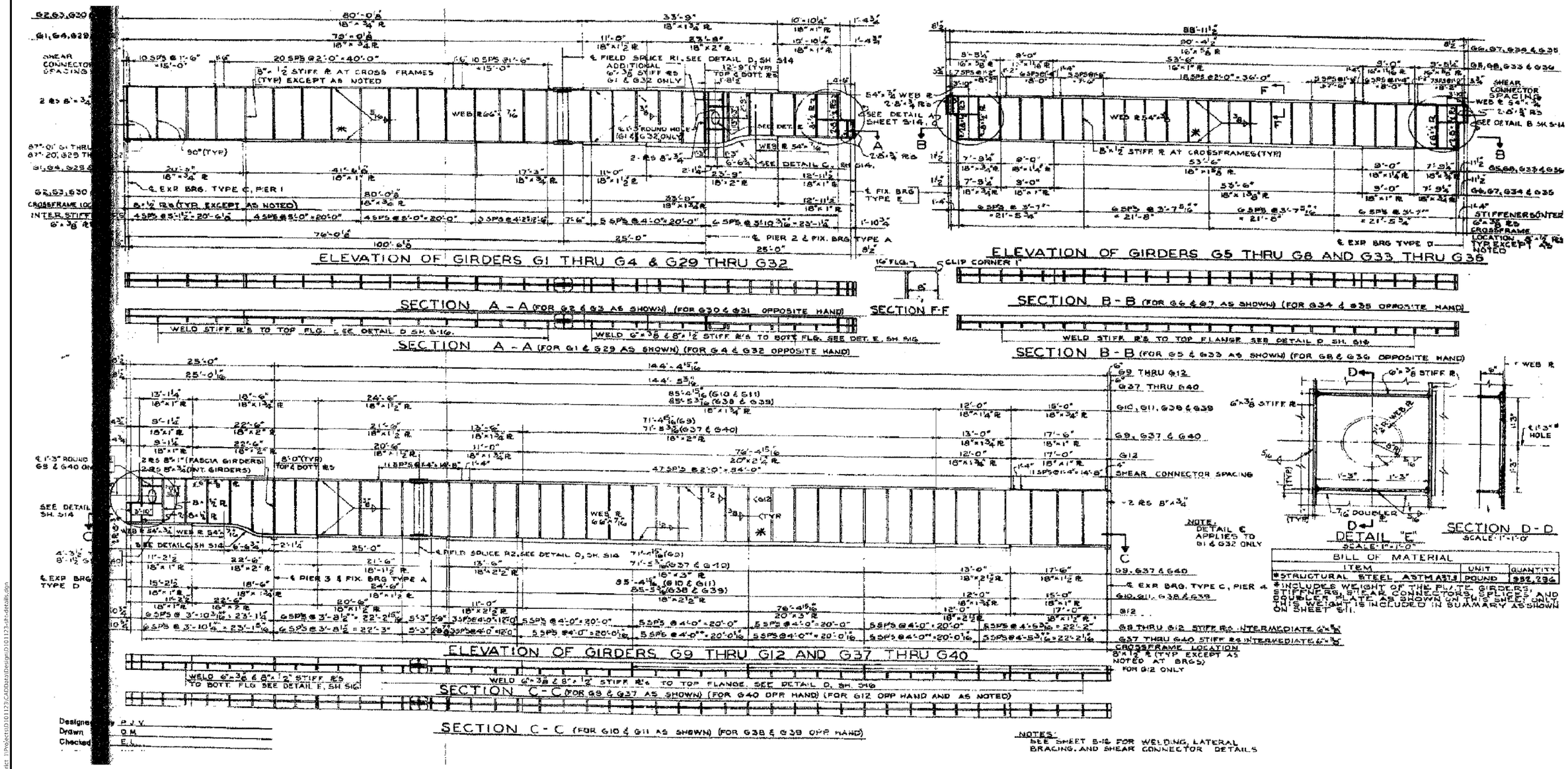

FOR INFORMATION ONLY

MODEL: Default
FILE NAME: pw://ildot-pw.bentley.com:PWIDOT\Documents\IDOT Offices\District 1\Project\010123\CADData\Design\010123-sh-details.dgn

USER NAME = Jacob.Roth	DESIGNED -	REVISED -	
	DRAWN -	REVISED -	
PLOT SCALE = 100.0000 ' / in.	CHECKED -	REVISED -	
PLOT DATE = 3/23/2023	DATE -	REVISED -	

STATE OF ILLINOIS
DEPARTMENT OF TRANSPORTATION

ORIGINAL GIRDER G1–G12 & G29–G40 DETAILS, SPANS 1–3
STRUCTURE NO. 016–1110

SCALE: | SHEET OF SHEETS | STA. TO STA.

F.A.I. RTE.	SECTION	COUNTY	TOTAL SHEETS	SHEET NO.
94	FAI 90 / 94 22 BP	COOK	22	8
		CONTRACT NO. 62U18		
		ILLINOIS FED. AID PROJECT		

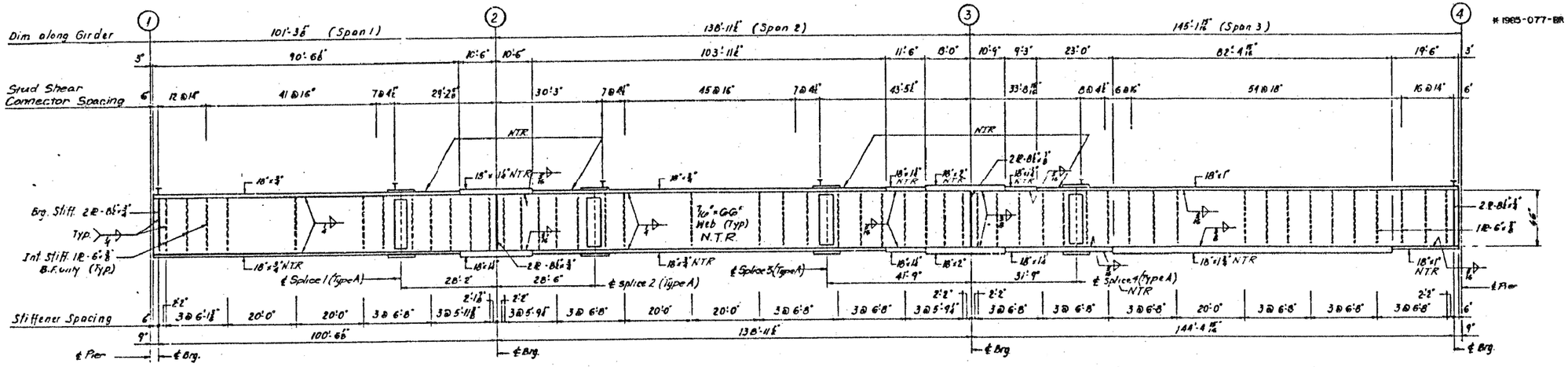

GIRDER GN-1 ELEVATION - SPAN 1 TO 3

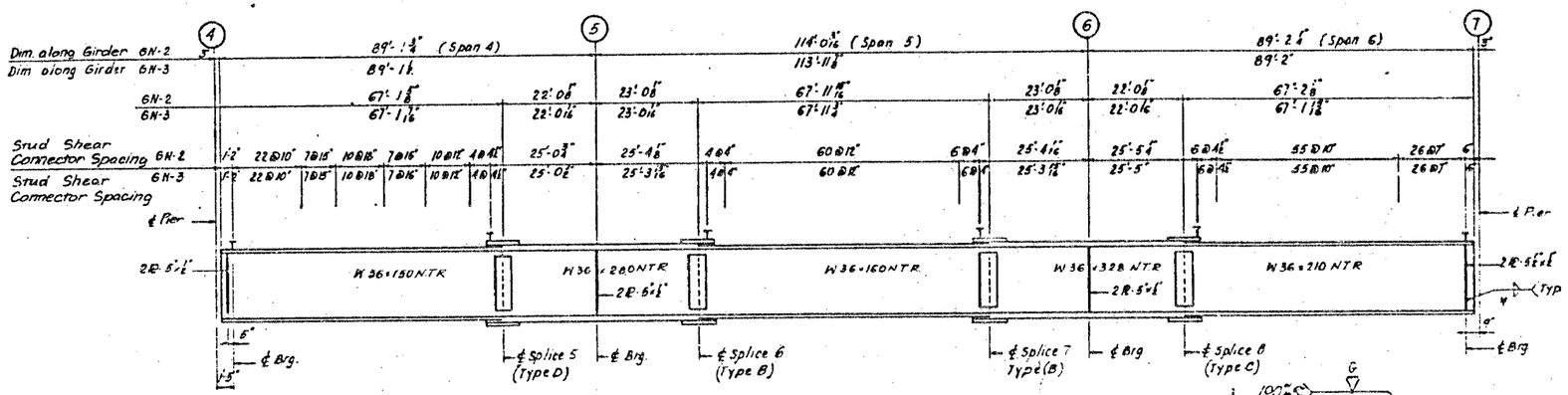

GIRDER GN-2 & GN-3 ELEVATION - SPAN 4 TO 6

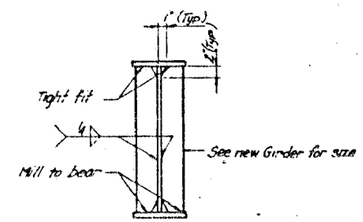

BEARING STIFFENER DET.

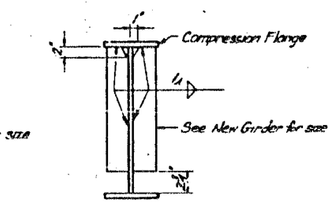

INTERMEDIATE STIFFENER DET.

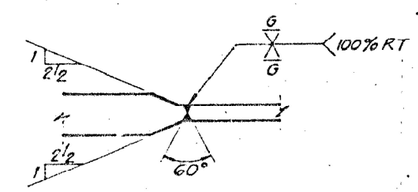

TYPICAL WEB SPLICE DETAIL

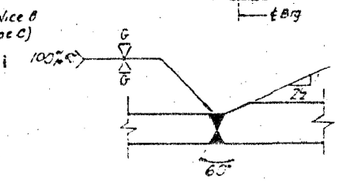

TYPICAL FLANGE SPLICE DETAIL

All materials shown on this sheet, except for stud shear connectors, furnished under a separate Steel Fabrication Contract (Section 1988-003 F), unless noted otherwise.

FOR INFORMATION ONLY

USER NAME = Jacob.Roth	DESIGNED -	REVISED -	STATE OF ILLINOIS DEPARTMENT OF TRANSPORTATION
	DRAWN -	REVISED -	
PLOT SCALE = 100.0000 ' / in.	CHECKED -	REVISED -	
PLOT DATE = 3/23/2023	DATE -	REVISED -	

DECK WIDENING, NEW GIRDER GN1–GN3 DETAILS
STRUCTURE NO. 016–1110

SCALE: SHEET OF SHEETS STA. TO STA.

F.A.I. RTE.	SECTION	COUNTY	TOTAL SHEETS	SHEET NO.
94	FAI 90 / 94 22 BP	COOK	22	9
		CONTRACT NO. 62U18		
	ILLINOIS	FED. AID PROJECT		

MODEL: Default
FILE NAME: pw:\\ildot-pw.bentley.com:PWIDOT\Documents\IDOT Offices\District 1\Projects\D101123\CADData\Design\D101123-dh-details.dgn

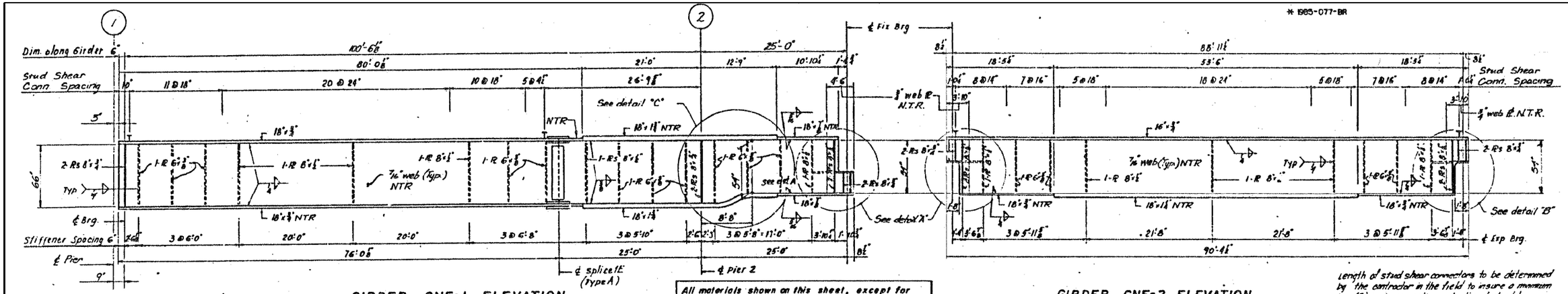

GIRDER GNE-1 ELEVATION

GIRDER GNE-2 ELEVATION

All materials shown on this sheet, except for stud shear connectors, furnished under a separate Steel Fabrication Contract (1988-003 F), unless noted otherwise.

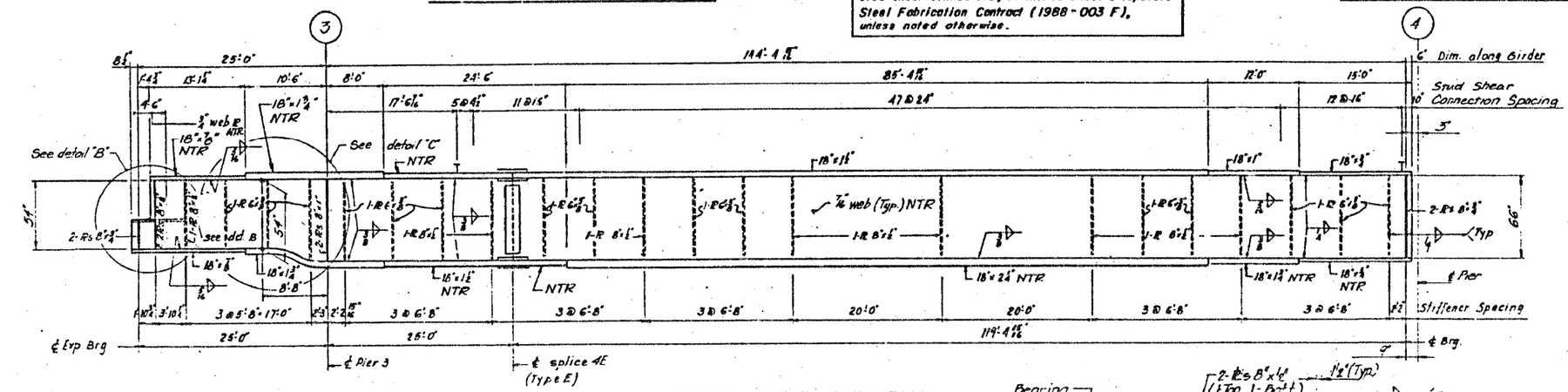

GIRDER GNE-3 ELEVATION

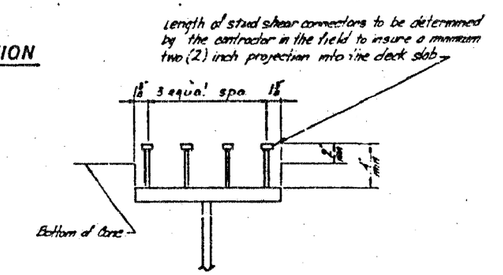

TYPICAL DETAIL OF STUD SHEAR CONNECTORS

Note: 1. Stud Shear Connector locations at flange splice plates to be adjusted by installer to miss splice bolts.
2. NTR - Notch Toughness Requirement.
3. All dimensions are along Girder in horizontal plane.

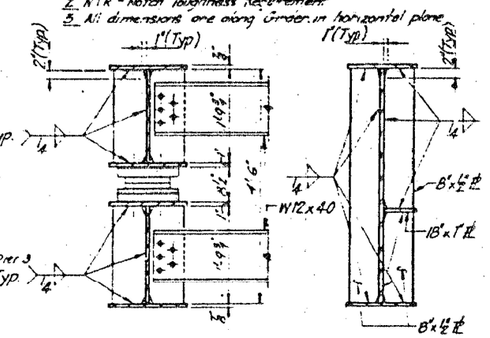

SECTION G - G

SECTION E-E

SECTION F-F

4. For bearing stiffener detail, intermediate stiffener detail, typical flange & web splice detail see sheet B11.
5. For Camber diagram see sheet B15.

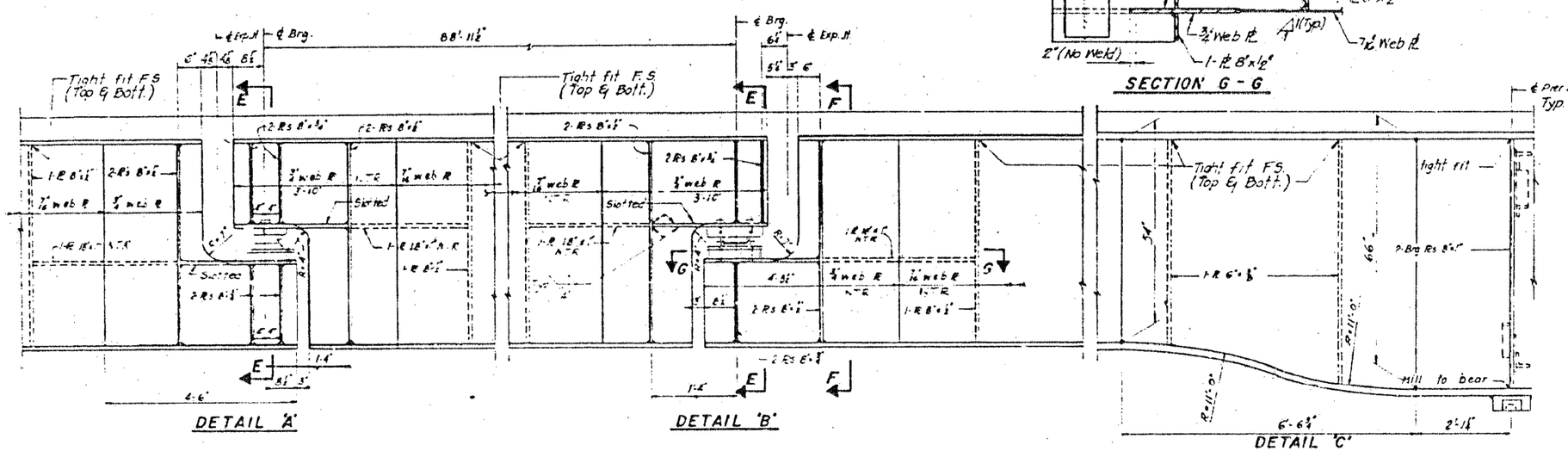

DETAIL 'A'

DETAIL 'B'

DETAIL 'C'

FOR INFORMATION ONLY

MODEL: Default
FILE NAME: pw:\\illinois-pw.bentley.com:PWIDOT\Documents\IDOT Offices\District 1\Projects\D101123\CADData\Design\D101123-sht-details.dgn

USER NAME = Jacob.Roth	DESIGNED -	REVISED -	STATE OF ILLINOIS DEPARTMENT OF TRANSPORTATION
	DRAWN -	REVISED -	
PLOT SCALE = 100.0000 ' / in.	CHECKED -	REVISED -	
PLOT DATE = 3/23/2023	DATE -	REVISED -	

DECK WIDENING, NEW GIRDERS GNE1–GNE3 DETAILS
STRUCTURE NO. 016–1110

SCALE: | SHEET OF SHEETS | STA. TO STA.

F.A.U. RTE.	SECTION	COUNTY	TOTAL SHEETS	SHEET NO.
94	FAI 90 / 94 22 BP	COOK	22	10
		CONTRACT NO. 62U18		
		ILLINOIS FED. AID PROJECT		

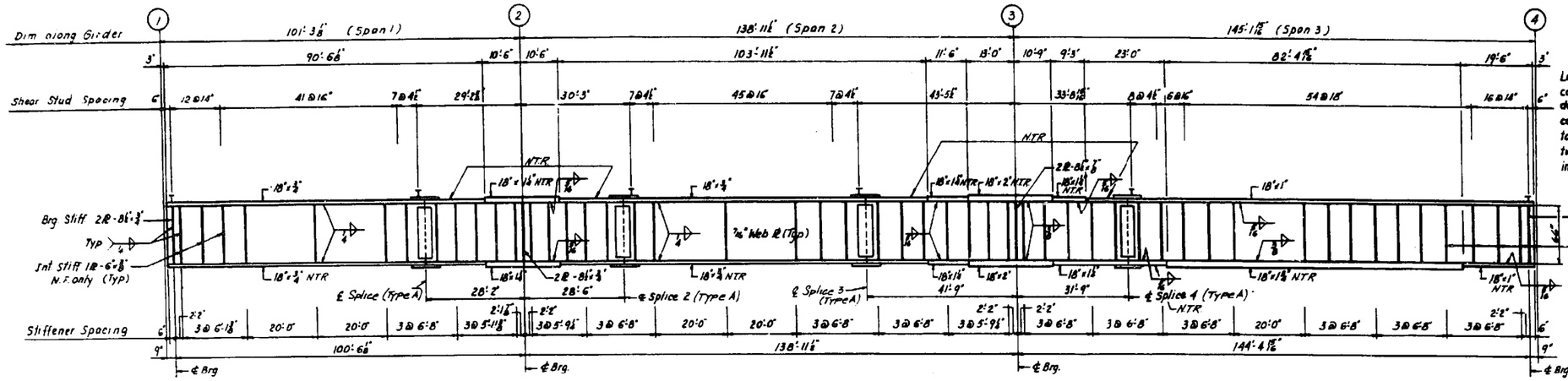

Length of stud shear connectors to be determined by the contractor in the field to insure a minimum two (2) inch projection into the deck slab.

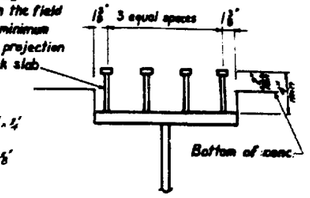

TYPICAL DETAIL OF SHEAR CONNECTORS

3/4"ø Granular or solid flux filled headed studs automatically end welded.

GIRDER GS-1 ELEVATION - SPAN 1 TO 3

Note:

1. Shear Connector locations at flange splice plates to be adjusted by installer to miss splice bolts
2. All Dimensions along Girder in horizontal Plane
3. N.T.R. - Notch Toughness Requirement.

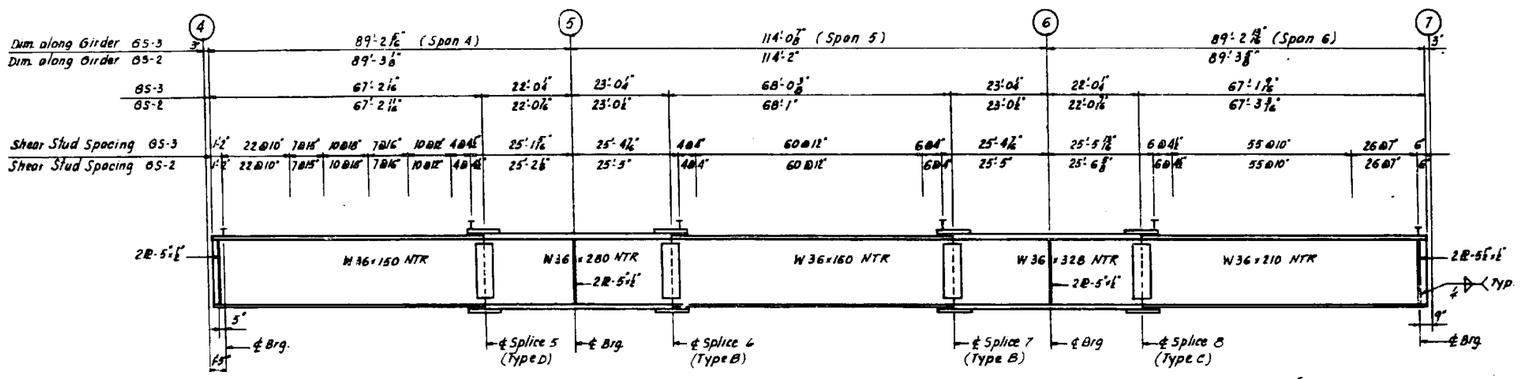

GIRDER GS-2 & GS-3 ELEVATION - SPAN 4 TO 6

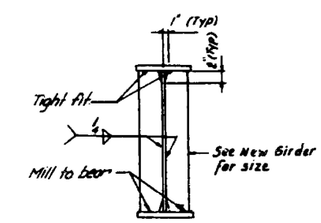

BEARING STIFFENER DET.

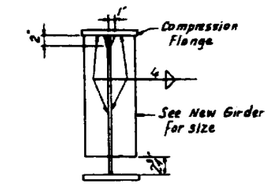

INTERMEDIATE STIFF. DET.

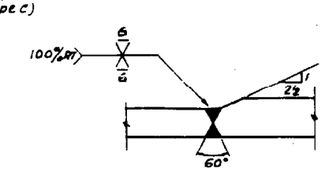

TYPICAL FLANGE SPLICE DETAIL

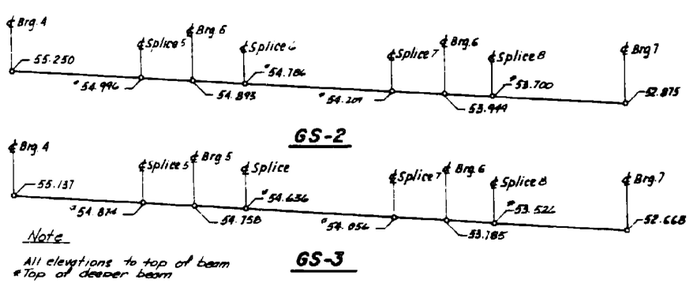

BLOCKING DIAGRAM

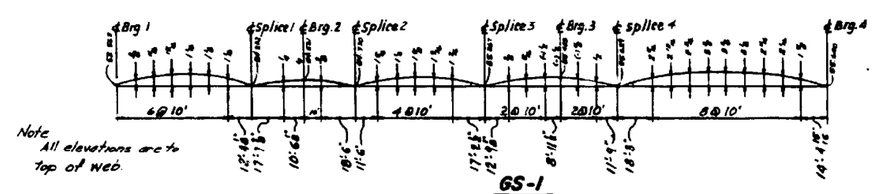

CAMBER DIAGRAM

FOR INFORMATION ONLY

MODEL: Default
FILE NAME: pw:\\ildot-pw.bentley.com:PWIDOT\Documents\IDOT Offices\District 1\Projects\D101123\CADData\Design\D101123-sht-details.dgn

USER NAME = Jacob.Roth	DESIGNED -	REVISED -	
	DRAWN -	REVISED -	
PLOT SCALE = 100.0000 ' / in.	CHECKED -	REVISED -	
PLOT DATE = 3/23/2023	DATE -	REVISED -	

STATE OF ILLINOIS
DEPARTMENT OF TRANSPORTATION

DECK WIDENING, NEW GIRDERS GS1–GS3 DETAILS
STRUCTURE NO. 016–1110

SCALE: | SHEET OF SHEETS | STA. | TO STA.

F.A.I. RTE.	SECTION	COUNTY	TOTAL SHEETS	SHEET NO.
94	FAI 90 / 94 22 BP	COOK	22	11
		CONTRACT NO. 62U18		
		ILLINOIS FED. AID PROJECT		

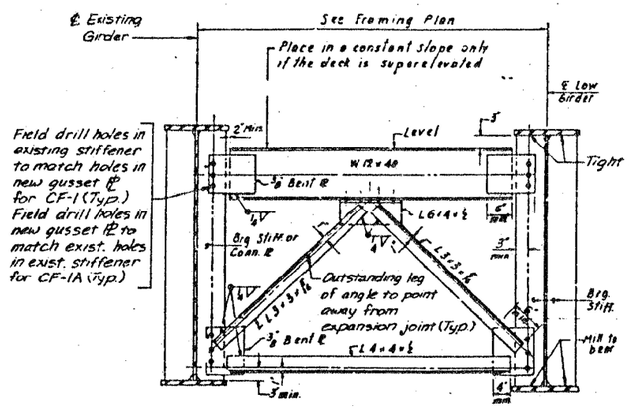

CF-1 & CF-1A
TYPICAL END CROSS FRAME

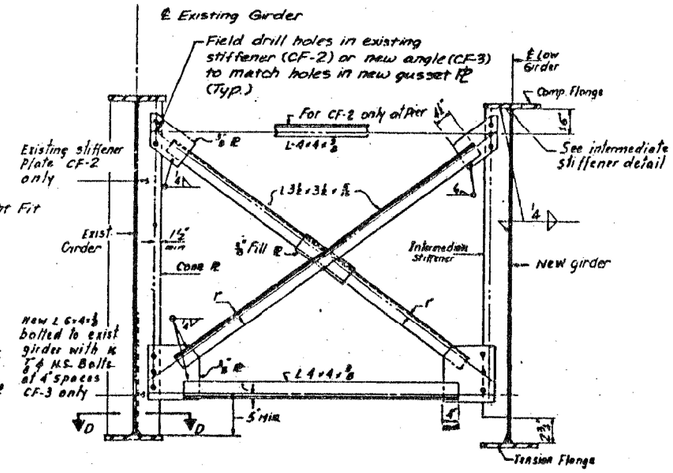

CF-2 & CF-3
TYPICAL INTERIOR CROSS FRAME

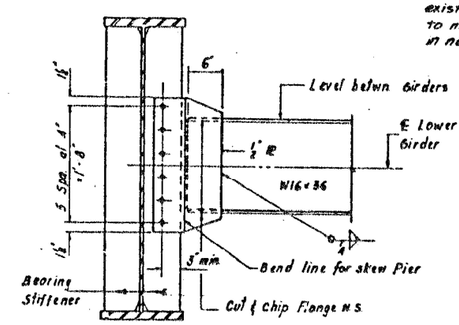

D-1
INTERIOR DIAPHRAGM AT PIER

* 1985-077-BR

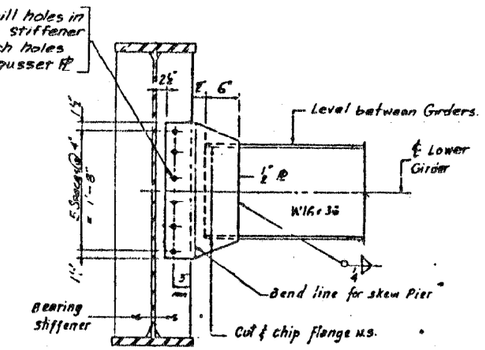

D-2
INTERIOR DIAPHRAGM AT PIER

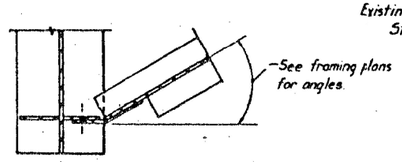

SECTION A-A

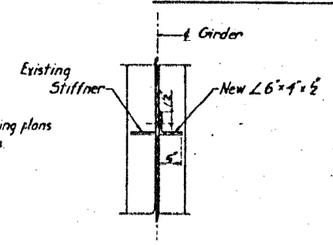

SECTION D-D
(CF-3 Only)

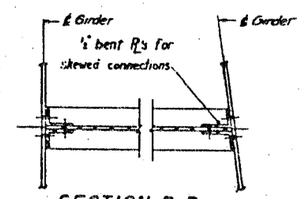

SECTION B-B

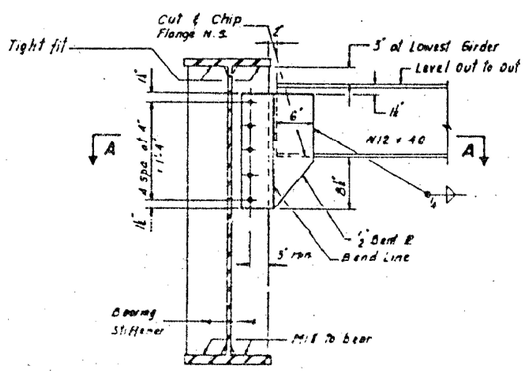

D-3
END DIAPHRAGM

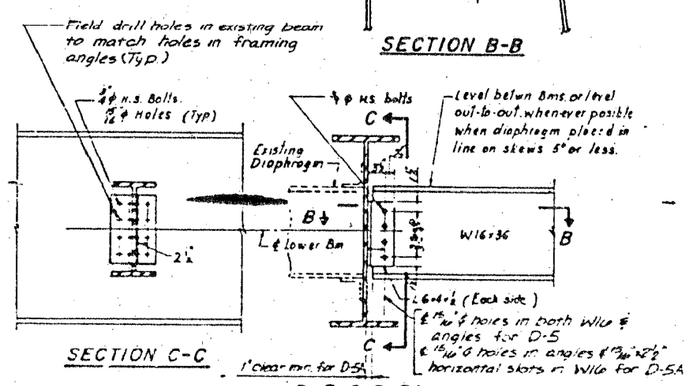

SECTION C-C

D-5 & D-5A
INTERIOR DIAPHRAGM

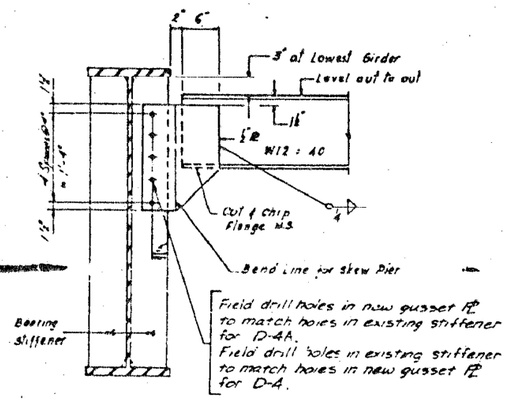

D-4 & D-4A
END DIAPHRAGM

FOR INFORMATION ONLY

MODEL: Default
FILE NAME: pw:\\ildot-pw.bentley.com:PWIDOT\Documents\IDOT Offices\District 1\Projects\D101123\CADData\Design\D101123-dh-details.dgn

USER NAME = Jacob.Roth	DESIGNED -	REVISED -	STATE OF ILLINOIS DEPARTMENT OF TRANSPORTATION
	DRAWN -	REVISED -	
PLOT SCALE = 100.0000 ' / in.	CHECKED -	REVISED -	
PLOT DATE = 3/23/2023	DATE -	REVISED -	

CROSS FRAME AND DIAPHRAGM DETAILS
STRUCTURE NO. 016–1110

SCALE: | SHEET OF SHEETS | STA. TO STA.

F.A.I. RTE.	SECTION	COUNTY	TOTAL SHEETS	SHEET NO.
94	FAI 90 / 94 22 BP	COOK	22	12
		CONTRACT NO. 62U18		
		ILLINOIS FED. AID PROJECT		

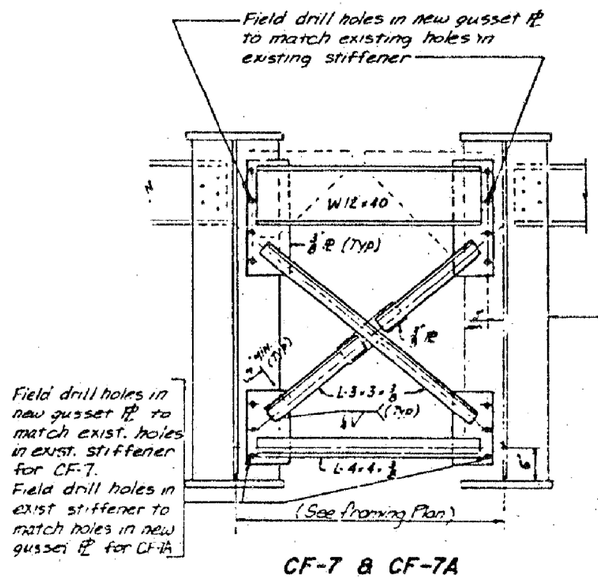

CF-7 & CF-7A

TYPICAL END CROSS FRAME

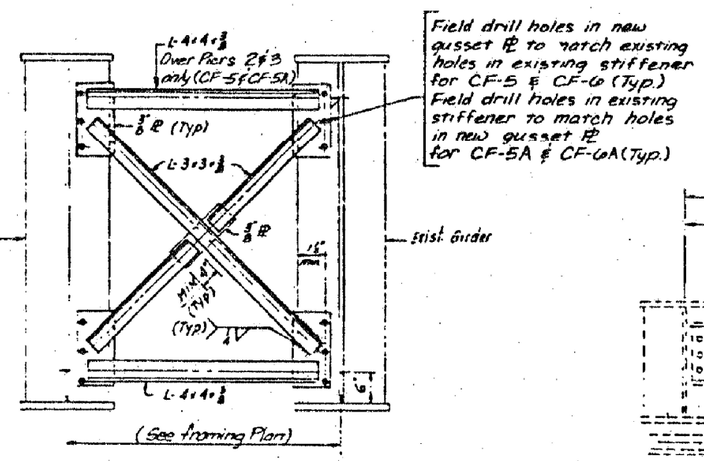

CF-5, CF-5A, CF-6 & CF-6A

TYPICAL INTERIOR CROSS FRAME

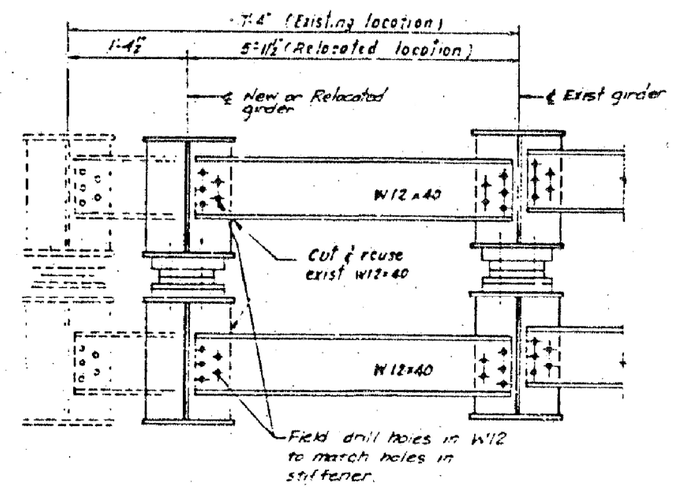

CF-8

FOR INFORMATION ONLY

MODEL: Default
FILE NAME: pw://ildot-pw.bentley.com:PWIDOT/Documents/IDOT Offices/District 1/Projects/D101123/CADData/Design/D101123-cfr-details.dgn

USER NAME = Jacob.Roth	DESIGNED -	REVISED -	
	DRAWN -	REVISED -	
PLOT SCALE = 100.0000 ' / in.	CHECKED -	REVISED -	
PLOT DATE = 3/23/2023	DATE -	REVISED -	

STATE OF ILLINOIS
DEPARTMENT OF TRANSPORTATION

CROSS FRAME AND DIAPHRAGM DETAILS
STRUCTURE NO. 016–1110

SCALE: | SHEET OF SHEETS | STA. TO STA.

F.A.I. RTE.	SECTION	COUNTY	TOTAL SHEETS	SHEET NO.
94	FAI 90 / 94 22 BP	COOK	22	13
		CONTRACT NO. 62U18		
		ILLINOIS	FED. AID PROJECT	

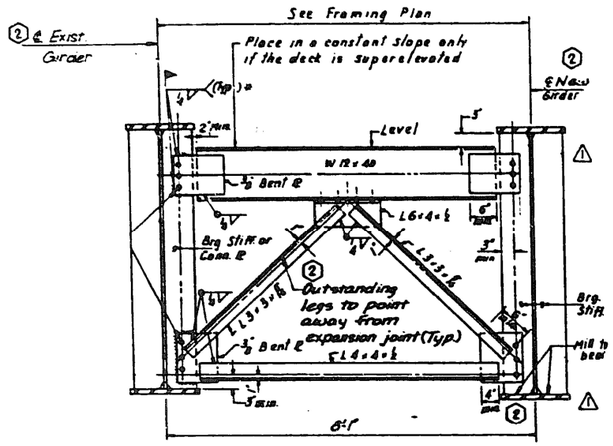

CF-1 & CF-1A②
TYPICAL END CROSS FRAME

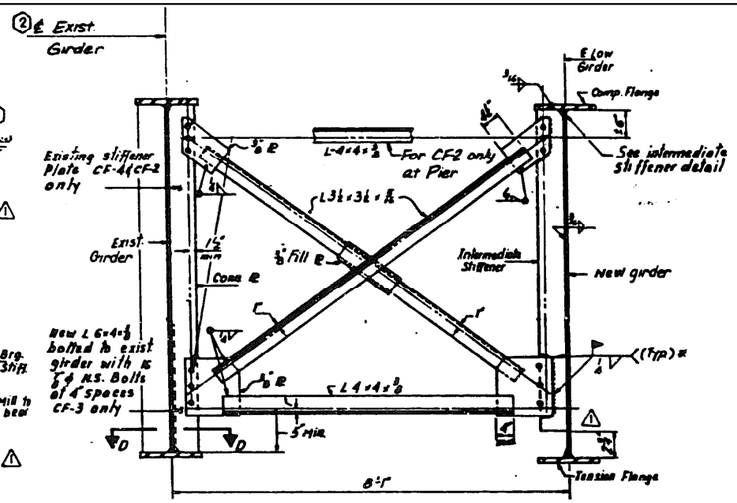

CF-2, CF-3 & CF-4
TYPICAL INTERIOR CROSS FRAME

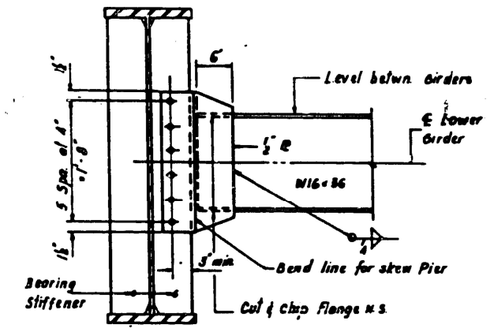

D-1
INTERIOR DIAPHRAGM AT PIER

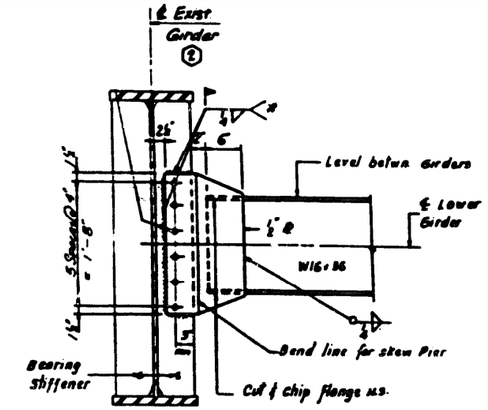

D-2 & D-2A②
INTERIOR DIAPHRAGM AT PIER

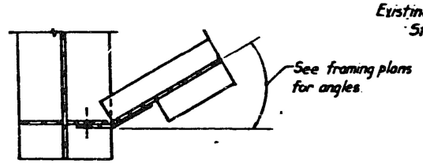

SECTION A-A

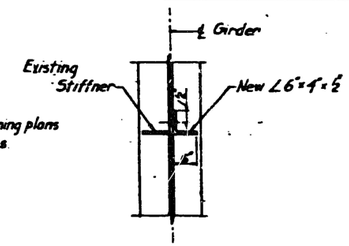

SECTION D-D
(CF-3 Only)

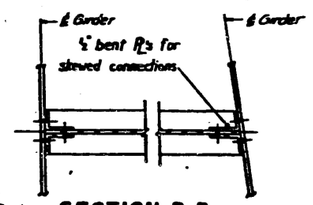

SECTION B-B

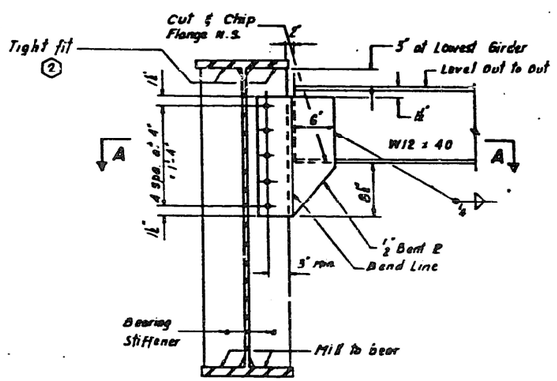

D-3
END DIAPHRAGM

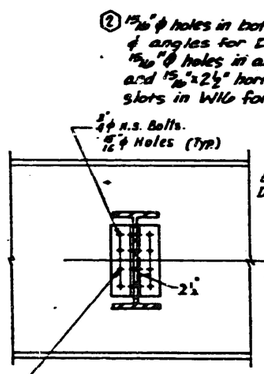

SECTION C-C

② Field drill holes in existing girder to match holes in framing angles (Typ.)

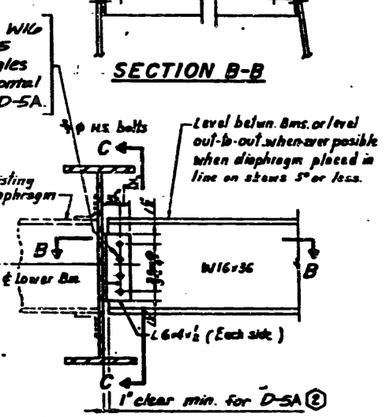

D-5 & D-5A②
INTERIOR DIAPHRAGM

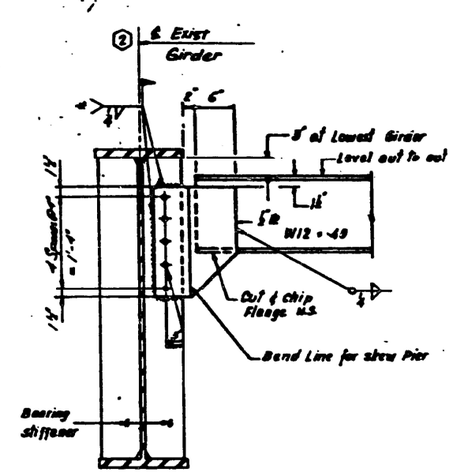

D-4 & D-4A②
END DIAPHRAGM

FOR INFORMATION ONLY

MODEL: Default
FILE NAME: pw:\\ildot-pw.bentley.com:PWIDOT\Documents\IDOT Offices\District 1\Projects\D101123\CADData\Design\D101123-sht-details.dgn

USER NAME = Jacob.Roth	DESIGNED -	REVISED -	STATE OF ILLINOIS DEPARTMENT OF TRANSPORTATION
	DRAWN -	REVISED -	
PLOT SCALE = 100.0000 ' / in.	CHECKED -	REVISED -	
PLOT DATE = 3/23/2023	DATE -	REVISED -	

CROSS FRAME AND DIAPHRAGM DETAILS
STRUCTURE NO. 016-1110

SCALE: | SHEET OF SHEETS | STA. TO STA.

F.A.I. RTE.	SECTION	COUNTY	TOTAL SHEETS	SHEET NO.
94	FAI 90 / 94 22 BP	COOK	22	14
		CONTRACT NO. 62U18		
		ILLINOIS FED. AID PROJECT		

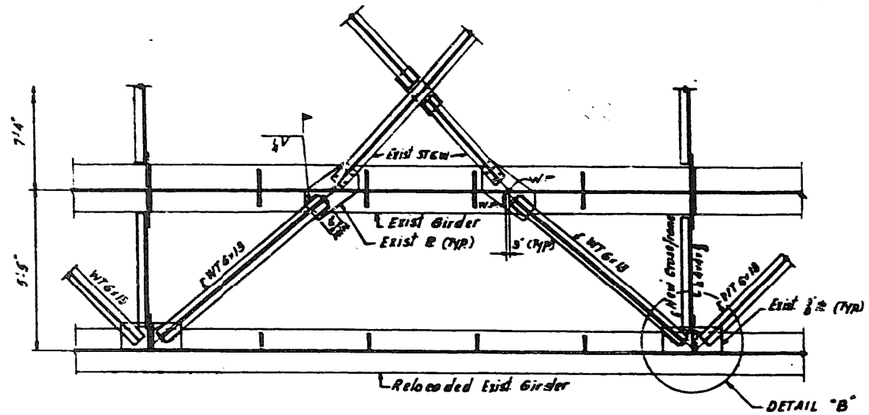

DETAIL "A"

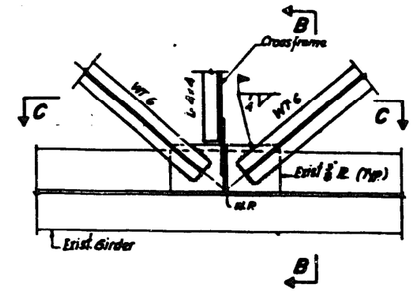

DETAIL "B"

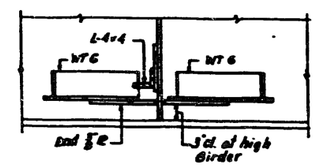

SECTION C-C

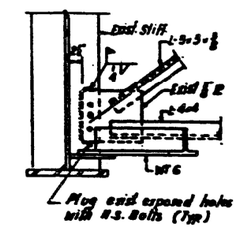

SECTION B-B

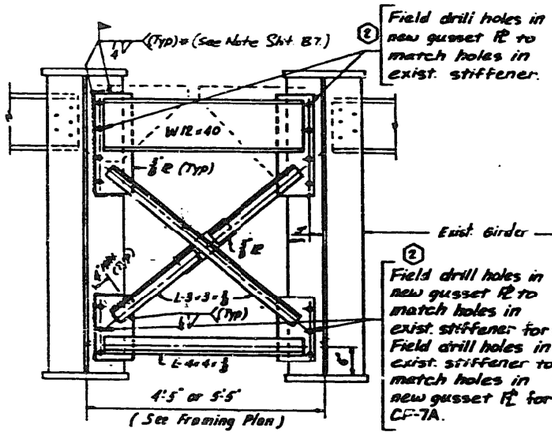

CF-7 & CF-7A ②

TYPICAL END CROSS FRAME

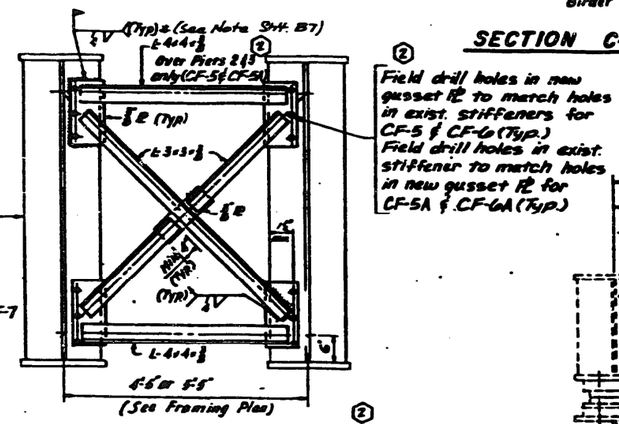

CF-5, CF-5A, CF-6 & CF-6A ②

TYPICAL INTERIOR CROSS FRAME

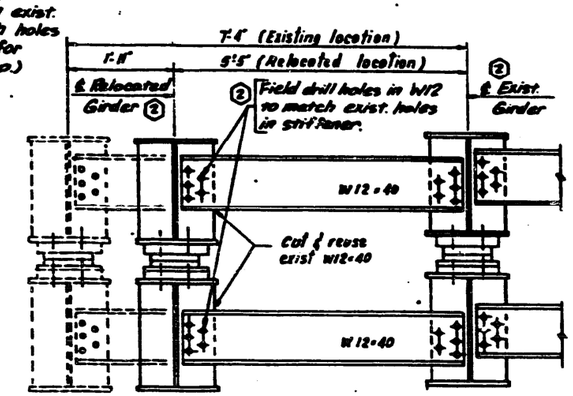

CF-8

FOR INFORMATION ONLY

USER NAME = Jacob.Roth	DESIGNED -	REVISED -	STATE OF ILLINOIS DEPARTMENT OF TRANSPORTATION
	DRAWN -	REVISED -	
PLOT SCALE = 100.0000 ' / in.	CHECKED -	REVISED -	
PLOT DATE = 3/23/2023	DATE -	REVISED -	

CROSS FRAME AND DIAPHRAGM DETAILS
STRUCTURE NO. 016-1110

SCALE: SHEET OF SHEETS STA. TO STA.

F.A.I. RTE.	SECTION	COUNTY	TOTAL SHEETS	SHEET NO.
94	FAI 90 / 94 22 BP	COOK	22	15
		CONTRACT NO. 62U18		
	ILLINOIS	FED. AID PROJECT		

MODEL: Default
FILE NAME: pw:\\illdot-pw.bentley.com:PWIDOT\Documents\IDOT Offices\District 1\Projects\D101123\CADData\Design\D101123-dh-details.dgn

MATERIAL – TYPE 'A'			
SOLE PL	10" × 3" × 1'-4"	2 - 5/8" ⌀ BOLTS 'X'	5" × 5" × 0.5"
MASONRY PL	20" × 2½" × 2'-0"	2 - ANCHOR BOLTS	1½" ⌀ × 3½"
WEB PL	14" × ⅜" × 1'-4"	2 - PL WASHERS	3½" ⌀ × ⅝"
4 - STIFFENER PL	7½" × ⅜" × 1'-0"		
⅛" LEAD PL	20" × ⅛" × 2'-0"		

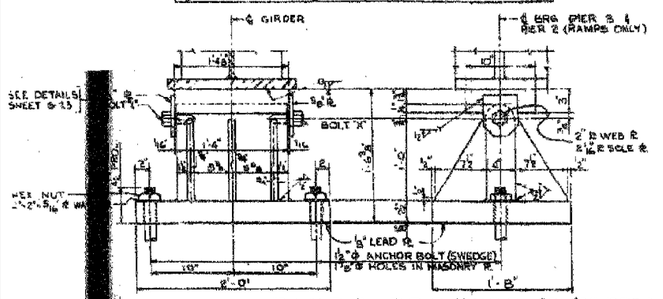

FIXED BRG. TYPE 'A' (32 REQ.)

SCALE: 1½" = 1'-0"

MATERIAL – TYPE 'B'			
SOLE PL	10" × 3" × 1'-0"	⅛" LEAD PL	1'-4" × 5" × 0.5"
MASONRY PL	16" × 2" × 2'-4"	2 - ⅝" ⌀ BOLTS 'X'	1'-4" × 1'-0"
WEB PL	11½" × 3½" × 1'-4"	2 - ANCHOR BOLTS	1½" ⌀ × 2'-0"
ROCKER PL	12" × 3½" × 2'-4"	2 - PL WASHERS	3½" ⌀ × ⅝"
6 - STIFFENER PL	2½" × ⅜" × 9"		

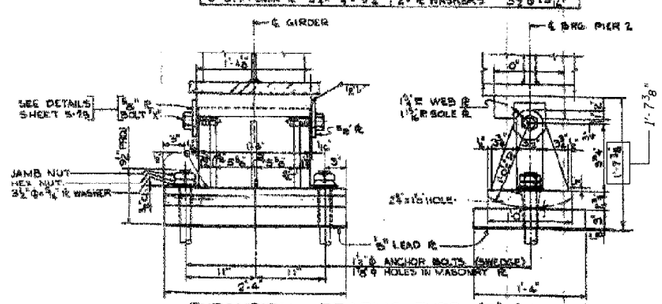

EXPANSION BEARING TYPE 'B' (16 REQ.)

SCALE: 1½" = 1'-0"

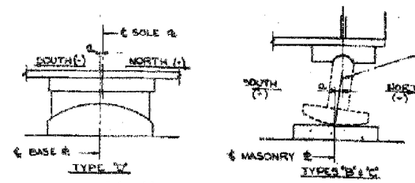

SOLE PL SETTING DIAGRAM

TABLE OF SETTINGS (a)							
TEMPERATURE		110°	90°	70°	50°	30°	10°
LOCATION OF ℄ BEARINGS	TYPE OF BEARING	ROADWAY					
PIER #1 (NORTH)	C	-7/16"	-5/8"	-5/8"	0	-5/8"	-5/8"
PIER #2	B	-5/8"	-7/16"	-5/16"	0	+5/16"	+7/16"
PIER #3 (FIXED)	A	0	0	0	0	0	0
PIER #4 (SOUTH)	C	+7/16"	+7/16"	+5/8"	0	-5/8"	-7/16"
LOCATION OF ℄ BEARINGS	TYPE OF BEARING	RAMPS					
PIER #1 (NORTH)	C	-1/4"	-5/16"	-5/16"	0	-5/16"	-5/16"
PIER #2 (FIXED)	A	0	0	0	0	0	0
SUSPENDED SPAN							
SOUTH END (FIXED)	E	0	0	0	0	0	0
NORTH END	D	+5/16"	+7/16"	+5/16"	0	-5/16"	-7/16"
PIER #3 (FIXED)	A	0	0	0	0	0	0
PIER #4 (SOUTH)	C	+7/16"	+7/16"	+1/4"	0	-1/4"	-7/16"

SCHEDULE OF BEARINGS			
BEARING TYPE	NUMBER REQUIRED	WEIGHT OF STEEL PER BRG. (LBS)	TOTAL STEEL (LBS)
'A'	32	871	27,872
'B'	16	1,070	17,120
'C'	48	646	31,008
'D'	8	703	5,624
'E'	8	772	6,176
		TOTAL	87,800

MATERIAL – TYPE 'C'			
SOLE PL	10" × 3" × 1'-4"	2 - ⅝" ⌀ BOLTS 'X'	5" × 5" × 0.5"
MASONRY PL	10" × 2½" × 2'-0"	2 - ANCHOR BOLTS	1½" ⌀ × 2'-0"
WEB PL	6½" × ⅜" × 1'-4"	2 - PL WASHERS	3½" ⌀ × ⅝"
ROCKER PL	6½" × 2½" × 2'-0"		
⅛" LEAD PL	12" × ⅛" × 2'-0"		

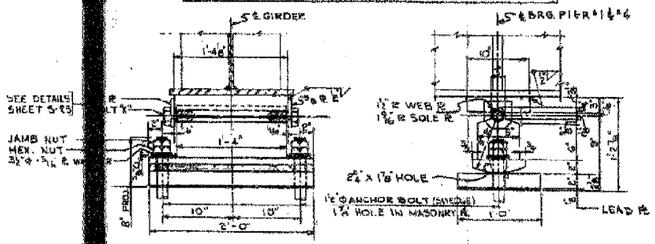

EXPANSION BRG. TYPE 'C' (48 REQ.)

SCALE: 1½" = 1'-0"

MATERIAL – TYPE 'D'			
SOLE PL	15" × 2" × 1'-3"	4 - BOLTS	1" ⌀ × 1'-3"
BRONZE PL	14" × 4½" × 1'-3"	4 - PL WASHERS	3½" ⌀ × ⅝"
BASE PL	15" × 4½" × 1'-3"	4 - PL WASHERS	2½" × ⅝"

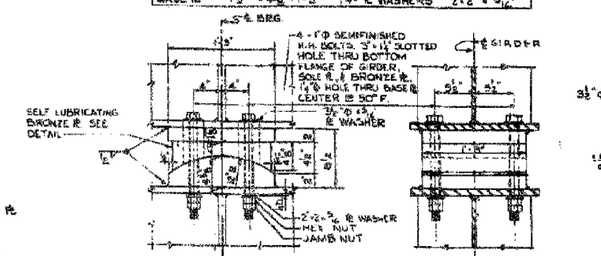

EXPANSION BRG. TYPE 'D' (8 REQ.)

SCALE: 1½" = 1'-0"

MATERIAL – TYPE 'E'			
SOLE PL	18" × 4½" × 1'-4"	2 - BOLTS	1" ⌀ × 1'-3"
BASE PL	15" × 6" × 1'-4"	2 - PL WASHERS	3½" ⌀ × ⅝"
2 - ⅝" PL	3½" × ⅝" × 1'-0"	2 - PL WASHERS	2½" × ⅝"

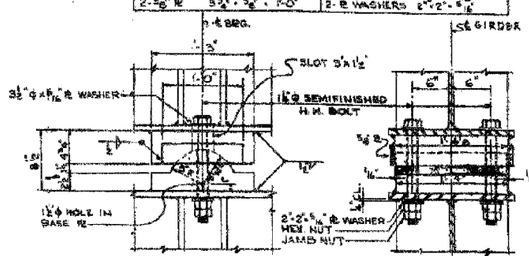

FIXED BRG. TYPE 'E' (8 REQ.)

SCALE: 1½" = 1'-0"

TABLE OF FILL PLATES (AT BEARINGS)						
LOCATION	GIRDER NUMBER					
	41	48	50	55	59	67
PIER NO. 4	—	—	14" × 3/8" × 1'-10½"	14" × 3/8" × 1'-8½"	14" × 3/8" × 1'-10½"	—
PIER NO. 6	—	12" × 3/8" × 2'-2"	—	—	—	—
PIER NO. 7	14" × 3/8" × 1'-10½"	14" × 3/8" × 1'-10½"	—	—	—	14" × 3/8" × 1'-8½"
TOTAL WEIGHT OF FILL PLATES - 234 LBS.						

TABLE OF BEVELS					
LOCATION	GIRDER NUMBER				
	41	42 to 58	64	65 to 66	67
PIER NO. 4	1/8"	3/32"	1/8"	1/32"	3/32"
PIER NO. 7	0	1/8"	3/32"	1/8"	1/16"

MATERIAL	TYPE F (6 REQ'D)	TYPE G (41 REQ'D)	TYPE H (7 REQ'D)
SOLE PL	9" × 2½" × 1'-0½"	9" × 2½" × 1'-0½"	9" × 2½" × 1'-0½"
MASONRY PL	14" × 2" × 1'-0½"	14" × 2" × 1'-0½"	14" × 2" × 1'-0½"
ROCKER PL	8" × 1'-11"	8" × 1'-11"	8" × 1'-11"
⅛" LEAD PL	14" × ⅛" × 1'-8½"	14" × ⅛" × 1'-8½"	14" × ⅛" × 1'-2½"
4 ANCHOR BOLTS	1" ⌀ × 1'-0"	1" ⌀ × 1'-0"	1" ⌀ × 1'-0"
4 PL WASHERS	2½" × ⅝" × 3½"	2½" × ⅝" × 3½"	2½" × ⅝" × 3½"
2 NUTS	1" ⌀ × 1'-0"	1" ⌀ × 1'-0"	1" ⌀ × 1'-0"
2 PL	2½" × ⅝" × 3½"	2½" × ⅝" × 3½"	2½" × ⅝" × 3½"

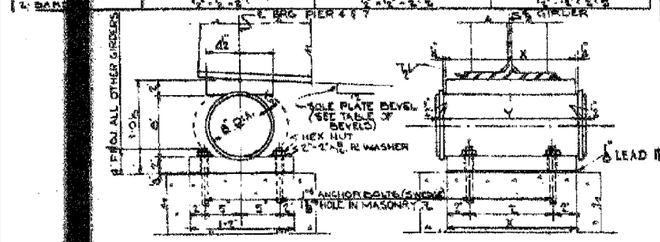

EXPANSION BEARING - TYPE 'F', 'G' & 'H'

SCALE: 1½" = 1'-0"

	Y	Z
TYPE 'F'	1'-9"	1'-4½"
TYPE 'G'	1'-6"	1'-1½"
TYPE 'H'	1'-8"	10½"

MATERIAL	TYPE J (3 REQ'D)	TYPE K (24 REQ'D)
SOLE PL	9" × 2½" × 1'-0½"	12" × 2½" × 2'-2"
MASONRY PL	12" × 2½" × 2'-6"	12" × 2½" × 2'-2"
WEB PL	6" × 2½" × 1'-0"	6" × 2½" × 2'-2"
ROCKER PL	6" × 2½" × 1'-0"	6" × 2½" × 2'-2"
⅛" LEAD PL	12" × ⅛" × 2'-6"	12" × ⅛" × 2'-2"
2 ANCHOR BOLTS	1½" ⌀ × 2'-0"	1½" ⌀ × 2'-0"
2 NUTS	1½" ⌀ × 1'-0"	1½" ⌀ × 1'-0"
2 PL WASHERS	3½" ⌀ × ⅝"	3½" ⌀ × ⅝"
2 PL	2½" × ⅝" × 3½"	2½" × ⅝" × 3½"

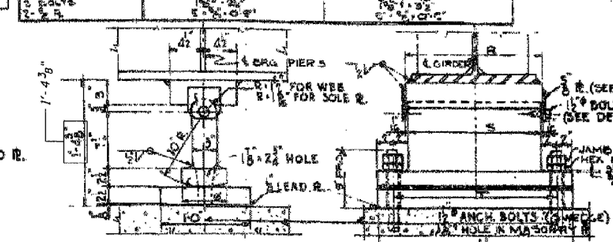

EXPANSION BEARING TYPE 'J' & 'K'

SCALE: 1½" = 1'-0"

	R	S	T	U
TYPE 'J'	1'-10½"	1'-10"	2'-2"	2'-6"
TYPE 'K'	1'-6½"	1'-6"	1'-10"	2'-2"

MATERIAL	TYPE L (27 REQ'D)
SOLE PL	10" × 2½" × 2'-2"
MASONRY PL	12" × 2½" × 2'-2"
⅛" LEAD PL	12" × ⅛" × 2'-2"
2 ANCHOR BOLTS	1½" ⌀ × 2'-0"
4 PL WASHERS	3½" ⌀ × ⅝"

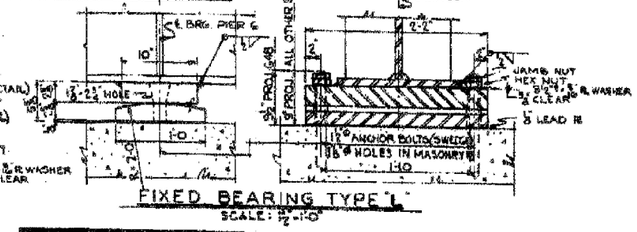

FIXED BEARING TYPE 'L'

SCALE: 1½" = 1'-0"

SCHEDULE OF BEARINGS			
BEARING TYPE	NUMBER REQUIRED	WT. OF STEEL PER BEARING, LBS	TOTAL STEEL LBS.
'F'	6	648	3,888
'G'	41	560	22,960
'H'	7	475	3,325
'J'	3	790	2,370
'K'	24	676	16,224
'L'	27	465	12,555
LESS ANCHOR BOLTS AT PIER 7 =			- 540 LBS
TOTAL WEIGHT OF BEARINGS =			60,782 LBS

FOR INFORMATION ONLY

MODEL: Default
FILE NAME: pw:\\ildot-pw.bentley.com:PWIDOT\Documents\IDOT Offices\District 1\Projects\D101123\CADData\Design\D101123-dh-details.dgn

USER NAME = Jacob.Roth	DESIGNED -	REVISED -	
	DRAWN -	REVISED -	
PLOT SCALE = 100.0000 ' / in.	CHECKED -	REVISED -	
PLOT DATE = 3/23/2023	DATE -	REVISED -	

STATE OF ILLINOIS
DEPARTMENT OF TRANSPORTATION

ORIGINAL BEARING DETAILS
STRUCTURE NO. 016–1110

SCALE: | SHEET OF SHEETS | STA. TO STA.

F.A.I. RTE.	SECTION	COUNTY	TOTAL SHEETS	SHEET NO.
94	FAI 90 / 94 22 BP	COOK	22	16
		CONTRACT NO. 62U18		
		ILLINOIS FED. AID PROJECT		

STATE OF ILLINOIS
DEPARTMENT OF TRANSPORTATION

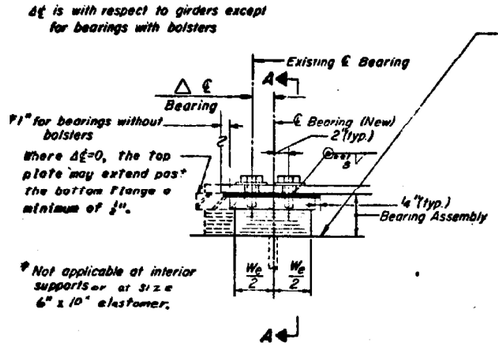

TYPICAL SECTION

** = ⅛" when screws are not used.

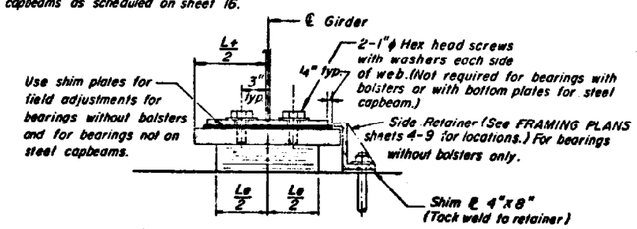

SECTION A-A

TYPE I ELASTOMERIC EXP. BRG.

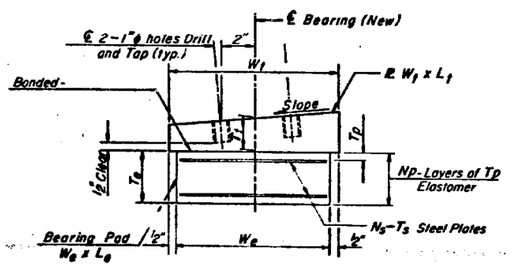

BEARING ASSEMBLY

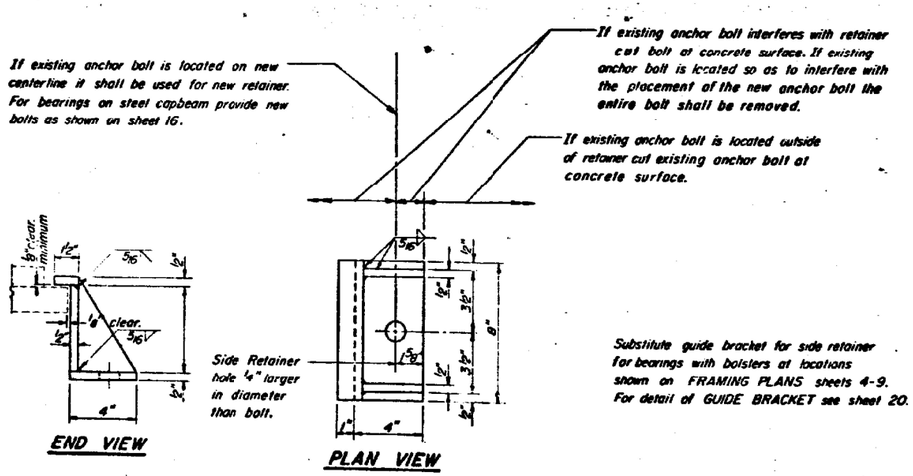

END VIEW

PLAN VIEW

SIDE RETAINER

Substitute guide bracket for side retainer for bearings with bolsters at locations shown on FRAMING PLANS sheets 4-9. For detail of GUIDE BRACKET see sheet 20.

TABLE OF DIMENSIONS AND THICKNESSES
TYPE I - BEARINGS WITH BOLSTERS

Section	Pier	Girder	Bottom Plates W_b	L_b	B_W	B_L	Shim Plate Thickness	Anchor Bolt Diameter
	D1(N)	1-4	11"	22"	0"	10"		1½"
	D4(S)	9	15"	26"	0"	10"		1½"
108		10-12	13"	24"	0"	10"		1½"
	E1(N)	29-32	11"	22"	0"	10"		1½"
	E4(S)	37-40	13"	24"	0"	10"		1½"

For definitions of W_b, L_b, B_W, and B_L see sheets 20 and 21.
B_W is used when the bearings have four anchor bolts, otherwise B_W is equal to zero.
* Furnish shims as required.

Centerline of elastomeric bearing and centerline of bolster shall be coincident with existing centerline of anchor bolts except for Pier 22 (South). See sheet 23.
Top bolster plate thickness (t_b) = 1½"

TABLE OF DIMENSIONS - TYPE I
ELASTOMERIC EXPANSION BEARINGS

W_e	L_e	Series	T_p	N_p	T_s	N_s	T_e
6"	10"	a	3/8"	3	14 ga.	2	1 1/8"
6"	10"	b	3/8"	5	14 ga.	4	1 7/8"
6"	10"	c	3/8"	6	14 ga.	5	2 1/4"
7"	12"	a	3/8"	3	3/32"	2	1 5/8"
7"	12"	b	3/8"	4	3/32"	3	1 11/16"
7"	12"	c	3/8"	5	3/32"	4	2 1/4"
9"	12"	a	3/8"	5	3/32"	4	2 1/4"
9"	12"	b	3/8"	7	3/32"	6	3 3/8"
9"	12"	c	3/8"	8	3/32"	7	3 15/16"
10"	14"	a	3/8"	5	1/8"	4	2 15/16"
10"	14"	b	3/8"	6	1/8"	5	3 1/4"
10"	14"	c	3/8"	7	1/8"	6	3 9/16"
10"	14"	d	3/8"	8	1/8"	7	4 3/8"
11"	16"	a	1/2"	4	1/8"	3	2 3/8"
11"	16"	b	1/2"	5	1/8"	4	3"
11"	16"	c	1/2"	6	1/8"	5	3 3/8"
11"	16"	d	1/2"	7	1/8"	6	4 1/4"
12"	18"	a	9/16"	3	3/16"	2	2 1/4"
12"	18"	b	9/16"	4	3/16"	3	2 13/16"
12"	18"	c	9/16"	5	3/16"	4	3 3/8"
12"	18"	d	9/16"	6	3/16"	5	4 3/8"
12"	18"	e	9/16"	7	3/16"	6	5 1/16"
14"	20"	a	5/8"	7	3/16"	6	5 1/2"
15"	22"	a	11/16"	6	3/16"	5	5 7/16"
16"	24"	a	3/4"	6	3/16"	5	5 9/16"

T_p denotes thickness of each elastomeric layer
N_p denotes number of elastomeric layers
T_s denotes thickness of each steel plate
N_s denotes number of steel plates

SECTION	PIER	GIRDER	NO. REQ'D	BEARING TYPE	PLAN VIEW END	PLAN VIEW SIDE	BOTTOM BOLSTER PLATE Tc	Wc	Lc	d	g	p_L	p_W	q	r	s_L	u	v	y	h	REMARKS
108	1 (N)	13-15,26-28	6	II	B	H	1"	12"	24"	5 3/8"	13"	2 1/4"	6"	2 1/2"	5"	2 1/2"	2"	6 1/4"	2 1/4"	6 3/4"	
		16-25	10	II	B	H	1"	11"	24"	5 3/8"	11"	2 1/4"	5 1/2"	2 1/2"	4"	2 1/2"	2"	5 1/4"	2 1/4"	6 3/4"	
	4 (S)	13,20	2	II	B	H	1"	13"	24"	5 3/8"	15"	2 1/4"	6 1/2"	2 1/2"	6"	2 1/2"	2"	7 1/4"	1 1/2"	7 3/4"	
		14-19,21-28	14	II	B	H	1"	12"	24"	5 3/8"	13"	2 1/4"	6"	2 1/2"	5"	2 1/2"	2"	6 1/4"	1"	7 1/4"	
		41,49,54,67	4	II	B	J	1"	15"	21"	4 1/4"	9"	2 1/4"	2 1/2"	7"	-	2 1/2"	2"	4 1/4"	1 15/16"	4 3/4"	
	4 (N)	42-48,50-53, 55-66	23	II	A	J	1".	15"	18"	6"	9"	2 1/4"	2 1/2"	7"	-	2 1/2"	2"	4 1/4"	1 15/16"	4 3/4"	
	D1 (N)	1-4	4	I	B	H	1"	11"	24"	5 3/8"	11"	2 1/4"	5 1/2"	2 1/2"	4"	2 1/2"	2"	5 1/4"	1 3/8"	7 1/8"	(3)
	4 (S)	9	1	I	B	H	1"	15"	26"	6"	17"	3"	7 1/2"	2 1/2"	8"	2 1/2"	2"	9 1/4"	2 1/4"	6 9/16"	(3)
		10-12	3	I	B	H	1"	13"	24"	5 3/8"	15"	2 1/4"	6 1/2"	2 1/2"	6"	2 1/2"	2"	7 1/4"	3 3/8"	5 9/16"	(3)
	E1 (N)	29-32	4	I	B	H	1"	11"	24"	5 3/8"	11"	2 1/4"	5 1/2"	2 1/2"	4"	2 1/2"	2"	5 1/4"	1 3/8"	7 1/8"	(3)
	4 (S)	37-40	4	I	B	H	1"	13"	24"	5 3/8"	15"	2 1/4"	6 1/2"	2 1/2"	6"	2 1/2"	2"	7 1/4"	3 3/8"	5 9/16"	(3)

FOR INFORMATION ONLY

MODEL: Default
FILE NAME: pw:\\ildot-pw.bentley.com:PWIDOT\Documents\IDOT Offices\District 1\Projects\101123\CADData\Design\101123-h1-details.dgn

USER NAME = Jacob.Roth	DESIGNED -	REVISED -	
	DRAWN -	REVISED -	
PLOT SCALE = 100.0000 ' / in.	CHECKED -	REVISED -	
PLOT DATE = 3/23/2023	DATE -	REVISED -	

STATE OF ILLINOIS
DEPARTMENT OF TRANSPORTATION

ELASTOMERIC BEARING DETAILS (1976)
STRUCTURE NO. 016-1110

SCALE: | SHEET OF SHEETS | STA. TO STA.

F.A.I. RTE.	SECTION	COUNTY	TOTAL SHEETS	SHEET NO.
94	FAI 90 / 94 22 BP	COOK	22	17

CONTRACT NO. 62U18
ILLINOIS | FED. AID PROJECT

STATE OF ILLINOIS

DEPARTMENT OF TRANSPORTATION

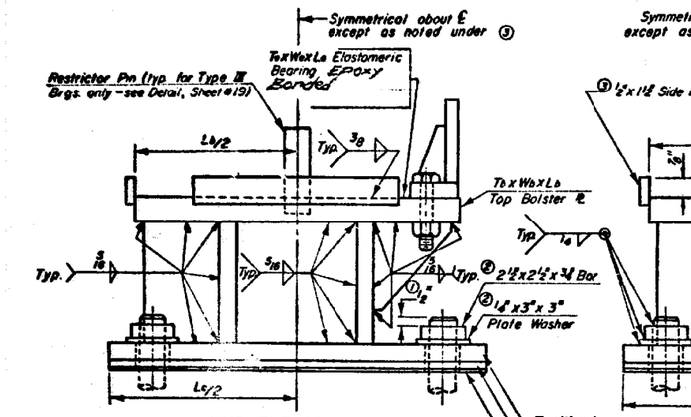

END ELEVATION A

Type I, II, or III

Applicable bearing types:

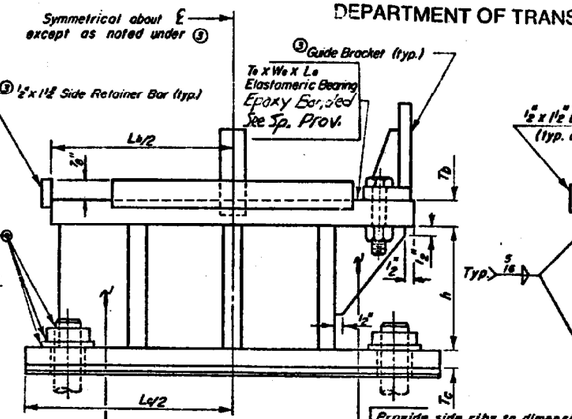

END ELEVATION B

Type I, II, or III

Extend side ribs to top of Bottom Bolster ℞ when 4 anchor bolts are used. (typ.)

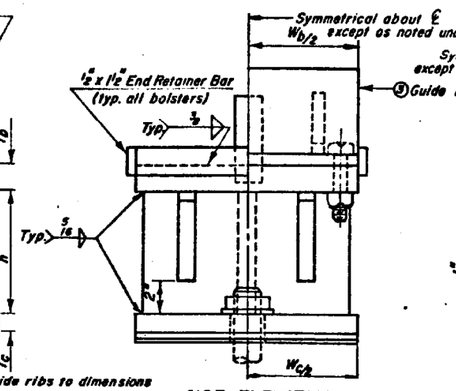

SIDE ELEVATION H

Type I, II, or III

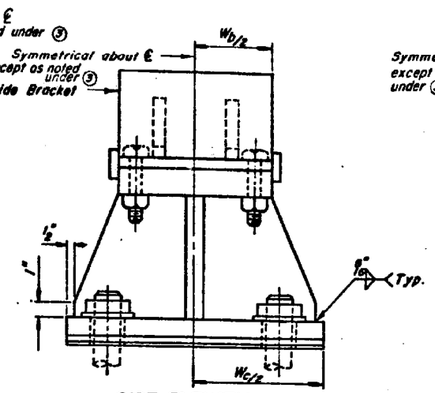

SIDE ELEVATION J

Type II only

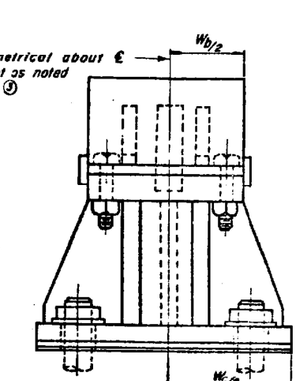

SIDE ELEVATION K

Types II & III only

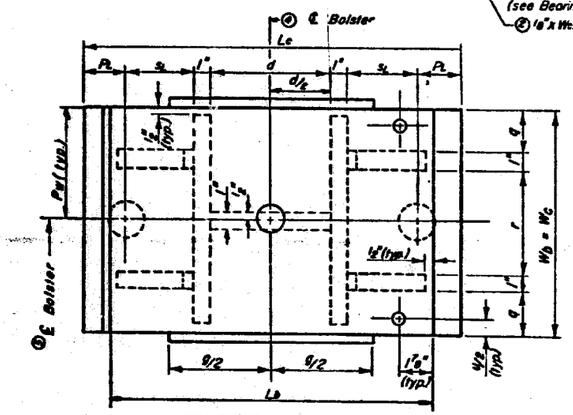

BOLSTER PLAN A-H

Applicable bearing types:

Type I, II, or III

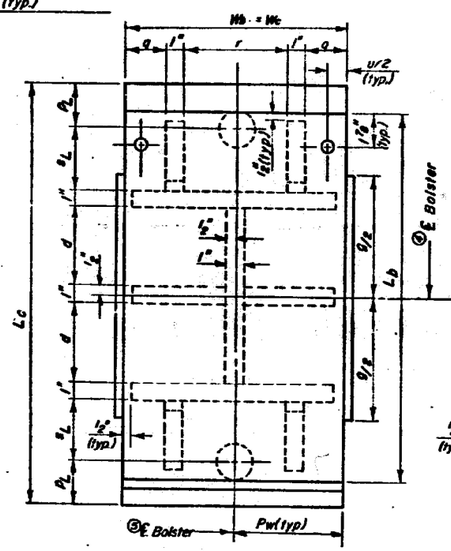

BOLSTER PLAN B-H

Applicable bearing types: Types I & II only

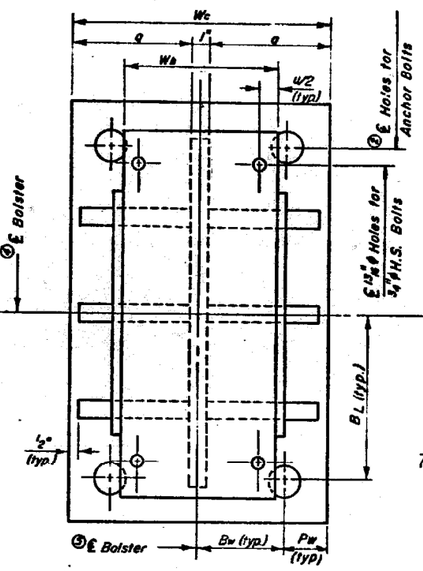

BOLSTER PLAN B-J

Type II only

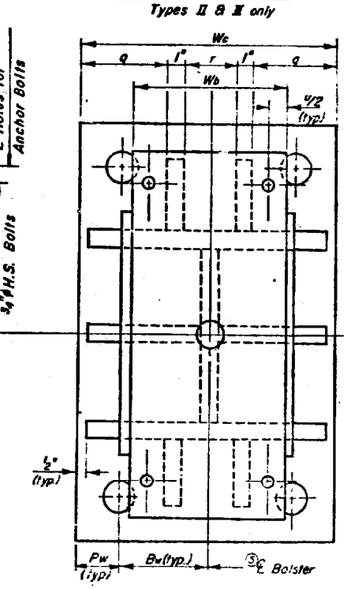

BOLSTER PLAN B-K

Types II & III only

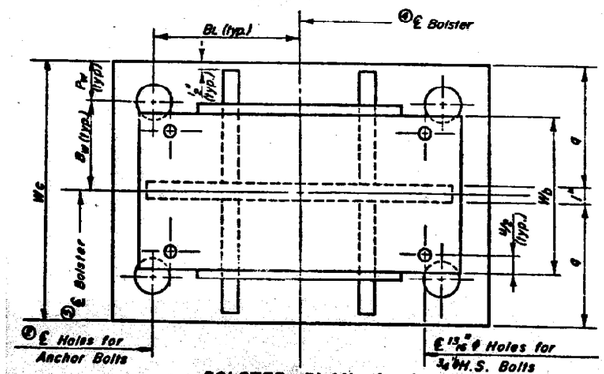

BOLSTER PLAN A-J

Applicable bearing types:

Type II only

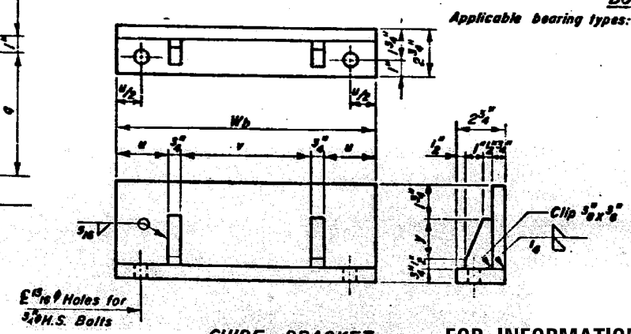

GUIDE BRACKET

FOR INFORMATION ONLY

Notes:

① Existing anchor bolts shall be cut off by mechanical means to provide ½" dimension above bar. Provide ½" dimension above bar for new anchor bolts.

② Holes for all the anchor bolts in the bottom bolster plate, shim plate and lead plate shall be ¼" larger in diameter than the anchor bolts themselves. Holes in the 2½" x 2½" bars and in the 3" x 3" plate washers shall be ¼" larger in diameter than the anchor bolts.

③ The ½" x 1½" side retainer bars shall be furnished for all bolsters supporting Type I bearings, except as shown on the Framing Plans where the guide bracket assembly and the ¾" ϕ H.S. bolts will be substituted. For those bolsters supporting Types II or III bearings, the guide bracket assembly and ¾" ϕ H.S. bolts shall be substituted for the side retainer bars.

④ The ℄ bolster, as shown, shall be coincident with the ℄ T.F.E. bearing assembly. The ℄ T.F.E. bearing assembly shall be coincident with the ℄ girder, unless otherwise noted.

⑤ The ℄ bolster, as shown, shall be coincident with the new and existing ℄ bearing, unless otherwise noted.

⑥ Shim plates shall have the same plan dimensions as the bottom bolster plate.

Notes:

Dimensions and details shown shall be similar for all bolsters.

Bearings covered by these details are those specified in the bolster schedule, sheet 21.

Area between retainer bars and elastomeric bearing is to be filled with sealer 1" thick, slope to drain (Elastomeric Polymer Type Sealer).

Work this sheet with sheets 11, 14, 15, 17-19, and 21.

USER NAME = Jacob.Roth	DESIGNED -	REVISED -	STATE OF ILLINOIS DEPARTMENT OF TRANSPORTATION	BOLSTER DETAILS (1976) STRUCTURE NO. 016-1110	F.A.I. RTE.	SECTION	COUNTY	TOTAL SHEETS	SHEET NO.
	DRAWN -	REVISED -			94	FAI 90 / 94 22 BP	COOK	22	18
PLOT SCALE = 100.0000 ' / in.	CHECKED -	REVISED -					CONTRACT NO. 62U18		
PLOT DATE = 3/23/2023	DATE -	REVISED -		SCALE: SHEET OF SHEETS STA. TO STA.			ILLINOIS FED. AID PROJECT		

MODEL: Default
FILE NAME: pw:\\ildot-pw.bentley.com:PWIDOT\Documents\IDOT Offices\District 1\Projects\D101123\CADData\Design\D101123-bt-details.dgn

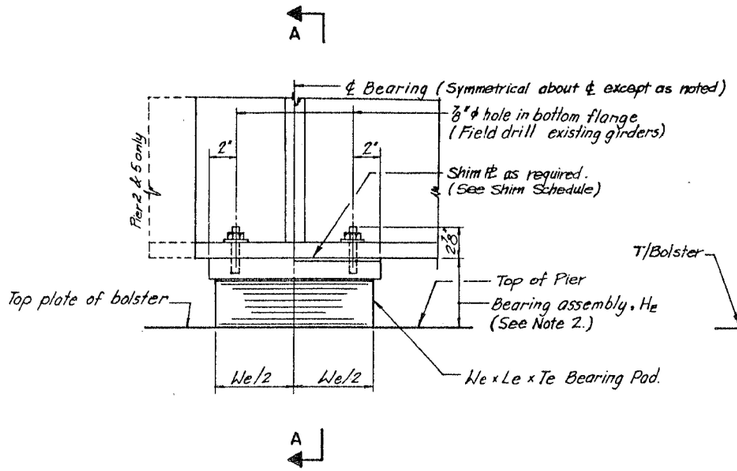

TYPICAL ELEVATION

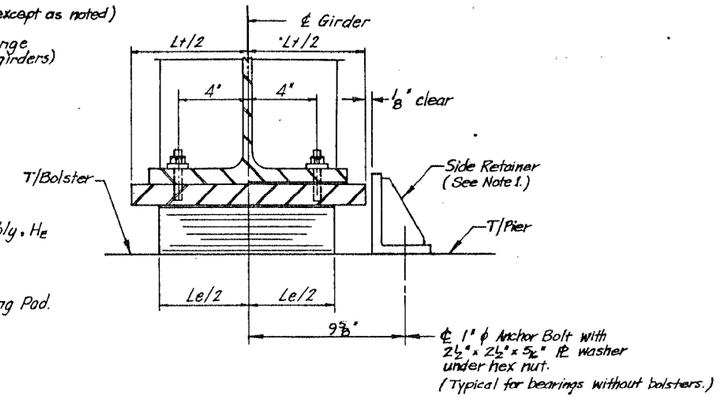

SECTION A-A

TYPE I ELASTOMERIC EXPANSION BEARING

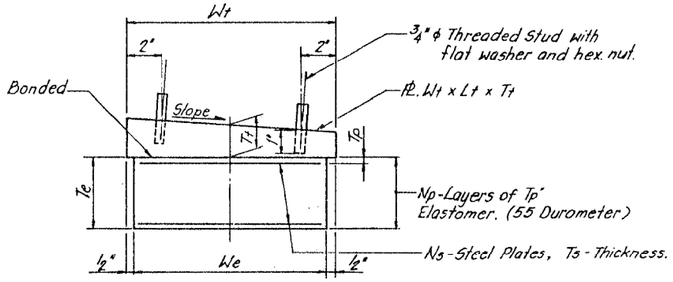

BEARING ASSEMBLY

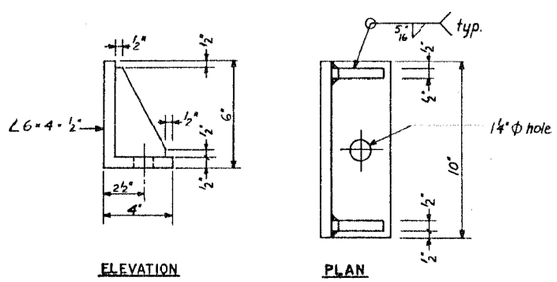

ELEVATION PLAN

SIDE RETAINER DETAILS

TABLE OF DIMENSIONS-TYPE I ELASTOMERIC EXPANSION BEARINGS

We	Le	Series	Tp	Np	Ts	Ns	Te
9"	12"	b	3/8"	7"	3/32"	6"	3 3/16"
10"	14"	b	7/16"	6"	1/8"	5"	3 1/4"
12"	18"	d	9/16"	6"	3/16"	5"	4 5/16"
12"	18"	e	9/16"	7"	3/16"	6"	5 1/16"
14"	20"	a	1/2"	7"	3/16"	6"	4 5/8"

Tp - denotes thickness of each elastomeric layer.
Np - denotes number of elastomeric layers.
Ts - denotes thickness of each steel plate.
Ns - denotes number of steel plates.

TYPE I ELASTOMERIC EXPANSION BEARING SCHEDULE

STRUCTURE	LOCATION	GIRDER	We	Le	SERIES	TOP PLATE Tt	Wt	Lt	Slope %	NO. REQUIRED	HE	REMARKS
016 - 1110	Pier 2	GN1	14	20	a	3	15	22	1.0	1	*	B,N
↖	Pier 4(5)	GNE3	12	18	e	2 1/4	13	20	0.0	1	*	B,N
↖	Pier 5	GN2,GN3	12	18	d	2 1/2	13	20	0.0	2	*	B,N
↓ ↖	Pier 7(5)	G55-G7	9	12	b	1 3/4	10	14	1.3	13	4 15/16	R,E(G55)
↓ ↖	Pier 7(5)	GN2,GN3	9	12	b	1 3/4	10	14	1.3	2	4 15/16	N,E(GN3)
016 - 1110	Pier 1(N)	GNE1	10	14	b	2	11	18	4.6	1	*	B,N

Remarks: B - Bolster required see Bolster Details.
N - New Bearings, roadway widening.
R - Replacement Bearings.
* - See Bolster Details for y and HE dimensions.

Notes:

1. Side retainer details for Bearings located on top of Pier are shown on this sheet. For Bearings requiring Bolster, see Bolster Detail sheet for Side Retainer Details.

2. Height of Bearing Assembly, HE, includes the Top Plate and Elastomeric Pad and does not include Shim Plate.

FOR INFORMATION ONLY

MODEL: Default
FILE NAME: pw:\\ildot-pw.bentley.com:PWIDOT\Documents\IDOT Offices\District 1\Projects\D101123\CADData\Design\D101123-sht-details.dgn

USER NAME = Jacob.Roth	DESIGNED -	REVISED -	
	DRAWN -	REVISED -	
PLOT SCALE = 100.0000 ' / in.	CHECKED -	REVISED -	
PLOT DATE = 3/23/2023	DATE -	REVISED -	

STATE OF ILLINOIS
DEPARTMENT OF TRANSPORTATION

TYPE I ELASTOMERIC BEARING DETAILS (1989)
STRUCTURE NO. 016-1110

SCALE: SHEET OF SHEETS STA. TO STA.

F.A.I. RTE.	SECTION	COUNTY	TOTAL SHEETS	SHEET NO.
94	FAI 90 / 94 22 BP	COOK	22	19
		CONTRACT NO. 62U18		
	ILLINOIS	FED. AID PROJECT		

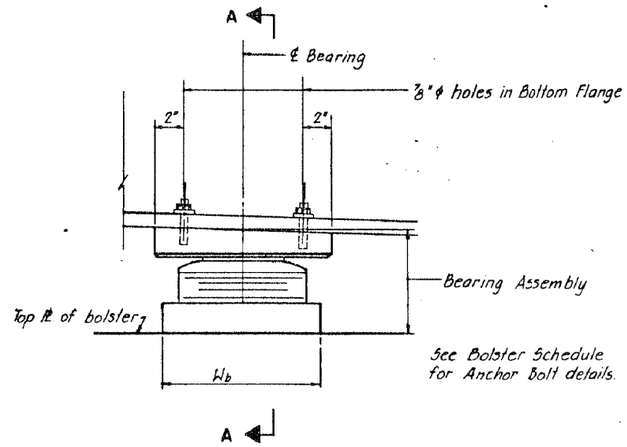

TYPICAL ELEVATION

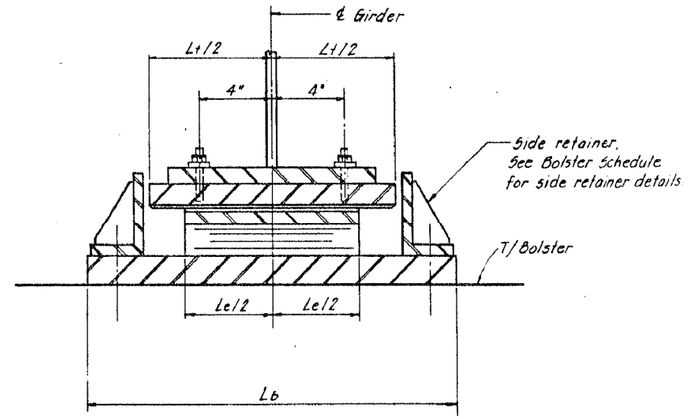

SECTION A-A

TYPE II TFE ELASTOMERIC EXPANSION BEARING

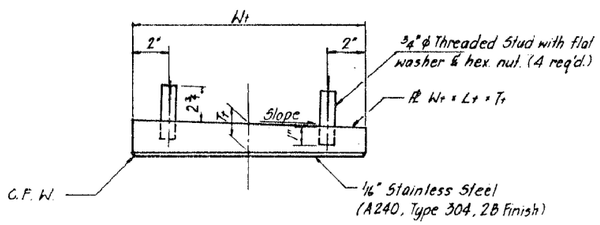

TOP BEARING ASSEMBLY

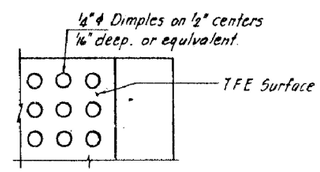

PLAN-TFE SURFACE

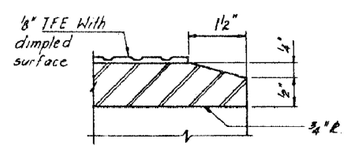

SECTION THRU TFE

Note: The ⅛" TFE sheet shall be bonded directly to the top steel plate with a two-component, medium viscosity epoxy resin, conforming to the requirements of the Federal Specification MMM-A-134, Type I. The bond agent shall be applied on the full area of the contact surface.

Bonding of ⅛" TFE sheet during vulcanizing process will be permitted provided the process and method of adjusting assembly height is approved by the Engineer.

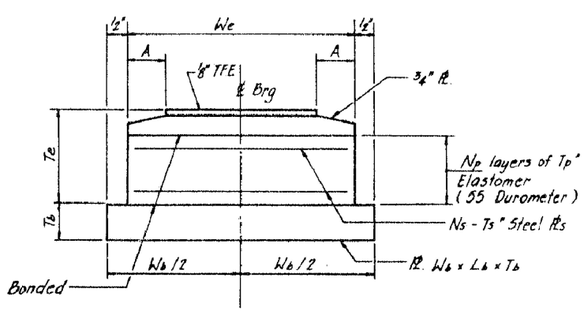

BOTTOM BEARING ASSEMBLY

TABLE OF DIMENSIONS - TYPE II ELASTOMERIC EXPANSION BEARINGS

We	Le	Series	Tp	Np	Ts	Ns	Te
9	12	b	3/8	7	3/32	6	4 1/16
11	16	a	1/2	4	1/8	3	3 1/4
11	16	c	1/2	6	1/8	5	4 1/2

Tp - denotes thickness of each elastomeric layer.
Np - denotes number of elastomeric layers.
Ts - denotes thickness of each steel plate.
Ns - denotes number of steel plates.

TYPE II ELASTOMERIC EXPANSION BEARING SCHEDULE

STRUCTURE	LOCATION	GIRDER	We	Le	Series	TOP PLATE Tt	TOP PLATE Wt	TOP PLATE Lt	TOP PLATE Slope %	BOTTOM ℞ Tb	BOTTOM ℞ Wb	BOTTOM ℞ Lb	NO. REQUIRED	REMARKS
016 - 1110	Pier 1(N)	GN1	11	16	c	1¾	13	18	0.9	1	12	26½	1	B, N
016 - 1110	Pier 4(S)	GN1	11	16	a	2	12	18	0.0	1¼	12	26½	1	B, N
016 - 1110	Pier 4(N)	GN2,GN3	9	12	b	1½	10½	14	0.5	1	10	22½	2	B, N

Remarks: B - Bolster required.
N - New Bearing, roadway widening.

FOR INFORMATION ONLY

MODEL: Default
FILE NAME: pw:\\ildot-pw.bentley.com:PWIDOT\Documents\IDOT Offices\District 1\Projects\D101123\CADData\Design\D101123-sh-details.dgn

USER NAME = Jacob.Roth	DESIGNED -	REVISED -	
	DRAWN -	REVISED -	
PLOT SCALE = 100.0000 ' / in.	CHECKED -	REVISED -	
PLOT DATE = 3/23/2023	DATE -	REVISED -	

STATE OF ILLINOIS
DEPARTMENT OF TRANSPORTATION

TYPE II ELASTOEMERIC BEARING DETAILS (1989)
STRUCTURE NO. 016-1110

SCALE: | SHEET OF SHEETS | STA. TO STA.

F.A.I. RTE.	SECTION	COUNTY	TOTAL SHEETS	SHEET NO.
94	FAI 90 / 94 22 BP	COOK	22	20
		CONTRACT NO. 62U18		
		ILLINOIS FED. AID PROJECT		

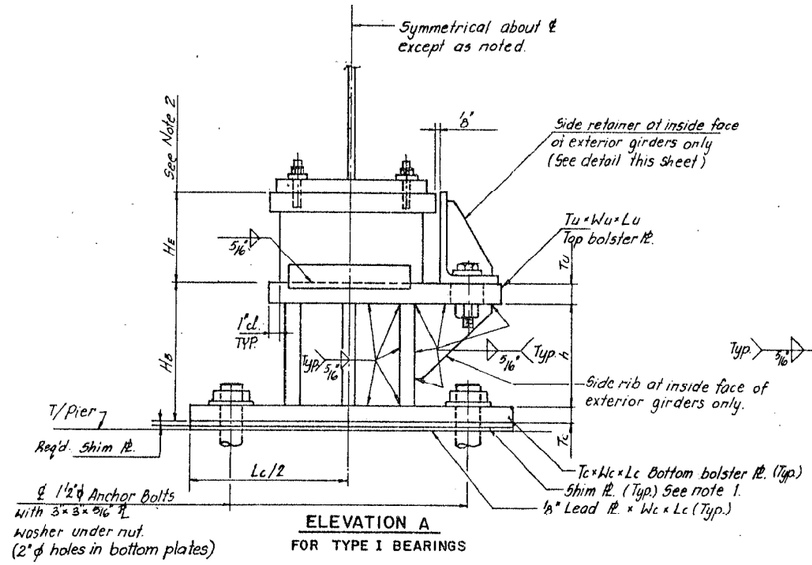

ELEVATION A
FOR TYPE I BEARINGS

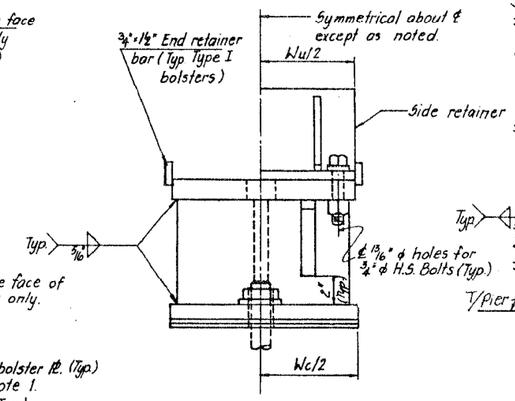

SIDE ELEVATION A

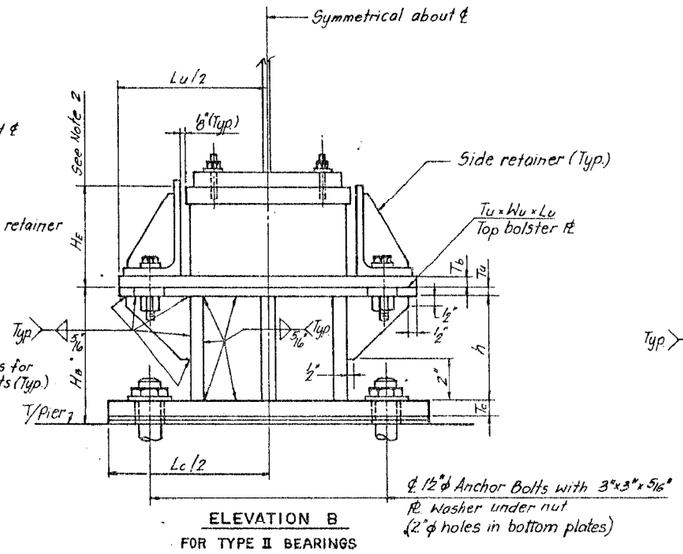

ELEVATION B
FOR TYPE II BEARINGS

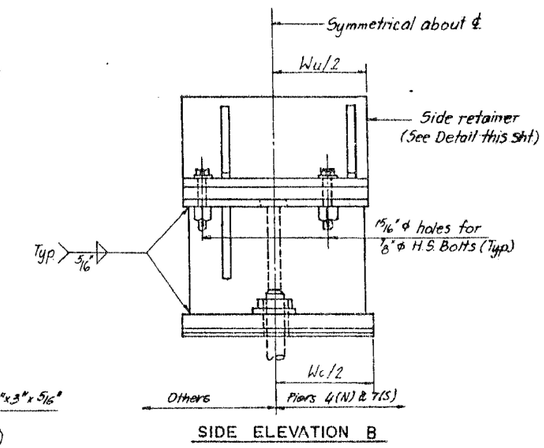

SIDE ELEVATION B

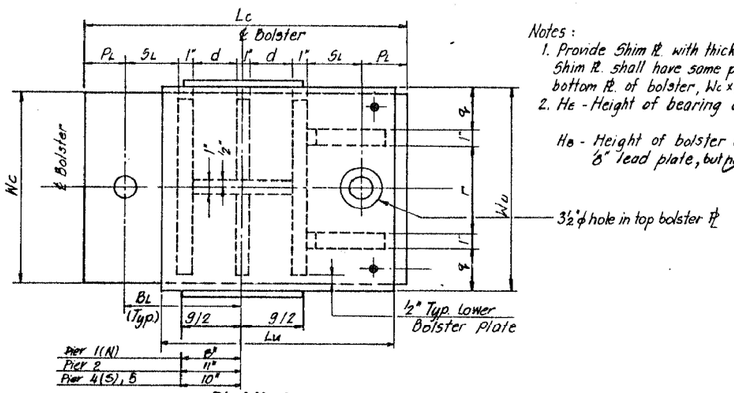

PLAN A

Notes :

1. Provide Shim PL. with thickness as needed. Shim PL. shall have same plan dimensions as bottom PL. of bolster, Wc × Lc.
2. He - Height of bearing assembly

He - Height of bolster assembly including 1/8" lead plate, but not the shim PL's.

BOLSTER SCHEDULE FOR ELASTOMERIC BEARINGS

STRUCTURE	LOCATION	GIRDER	NO. REQUIRED	BEARING TYPE	PLAN & ELEV.	TOP BOLSTER PL. Tu	Wu	Lu	BOTT. BOLSTER PL. Tc	Wc	Lc	ANCH. BOLT. BL	Ø	d	g	PL	q	r	SL	u	v	y	h	H_B	H_E	REMARKS
016-1110	Pier 1(N)	GN-1	1	II	B	1	12	26 1/2	1	12	26 1/2		10 3/4	1 1/2	6 1/2	–	2 1/2	3	4	2 3/4	3	1 1/2	7	5 1/16	7 9/16	7 5/16	
"	Pier 2	GN-1	1	I	A	1 1/2	16	26 1/2	1	15	28 1/2		11 3/4	1 1/2	7 1/2	18	2 1/2	3	8	2 3/4	3	1 1/2	7	9 1/8	11 7/8	7 7/8	E
"	Pier 4(5)	GN-1	1	II	B	1	12	26 1/2	1	12	26 1/2		10 3/4	1 1/2	6 1/2	–	2 1/2	3	4	2 3/4	3	1 1/2	6	6 7/16	8 5/16	6 3/16	
"	Pier 4(5)	GN-E3	1	I	A	1 1/2	14	24 1/2	1	13	26 1/2		10 3/4	1 1/2	6 1/2	16	2 1/2	–	–	2 1/2	3	1 1/2	8	8 15/16	7 9/16	7 5/16	E
"	Pier 4(N)	GN-2, GN-3	2	II	B	3/4	10	22 1/2	1	10	22 1/2		8 3/4	1 1/2	4 1/2	–	2 1/2	–	–	2 3/4	1/2	3	6	3 5/8	5 1/2	6 3/8	
"	Pier 5	GN-2	1	I	A	1 1/2	14	20	1	13	26 1/2		10 3/4	1 1/2	6 1/2	16	2 1/2	3		2 3/4				9 3/16	11 9/16	6 3/16	
"	Pier 5	GN-3	1	I	A	1 1/2	14	24 1/2	1	13	26 1/2		10 3/4	1 1/2	6 1/2	16	2 1/2	3	6	2 3/4	3	1 1/2	7	9 3/16	11 9/16	6 3/16	E
016-1110	Pier 1(N)	GNE-1	1	I	A	1 1/2	12	20 1/2	1	11	24 1/2	0	9 3/4	1 1/2	5 1/2	12	2 1/2	3	4	2 3/4	3	1 1/2	6	6 3/8	9 1/2	5 1/4	E

Remarks : E - Exterior Girder ; Side Retainer required at inside face of girder.

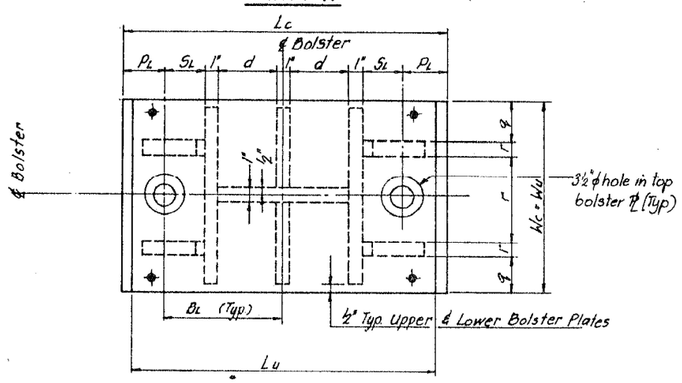

PLAN B

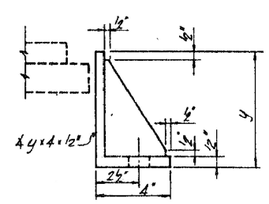

ELEVATION

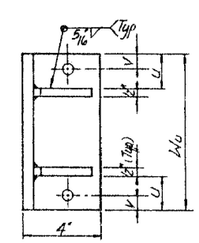

PLAN (OTHERS)

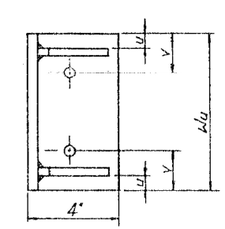

PLAN PIERS 4(N) & 7(S)

SIDE RETAINER

FOR INFORMATION ONLY

USER NAME = Jacob.Roth	DESIGNED -	REVISED -	
	DRAWN -	REVISED -	
PLOT SCALE = 100.0000 ' / in.	CHECKED -	REVISED -	
PLOT DATE = 3/23/2023	DATE -	REVISED -	

STATE OF ILLINOIS
DEPARTMENT OF TRANSPORTATION

BOLSTER DETAILS (1989)
STRUCTURE NO. 016–1110

SCALE: | SHEET OF SHEETS | STA. TO STA.

F.A.I. RTE.	SECTION	COUNTY	TOTAL SHEETS	SHEET NO.
94	FAI 90 / 94 22 BP	COOK	22	21
		CONTRACT NO. 62U18		
		ILLINOIS FED. AID PROJECT		

MODEL: Default
FILE NAME: pw:\\ildot-pw.bentley.com:PWIDOT\Documents\IDOT Offices\District 1\Projects\D101123\CADData\Design\D101123-dtl-details.dgn

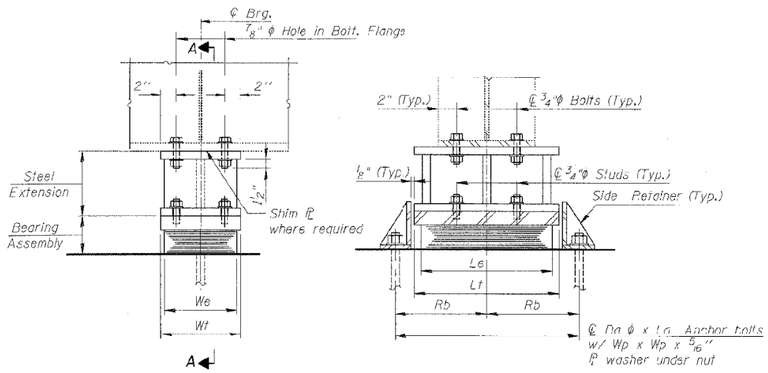

ELEVATION AT PIER

SECTION A-A

TYPE I ELASTOMERIC EXP. BRG.

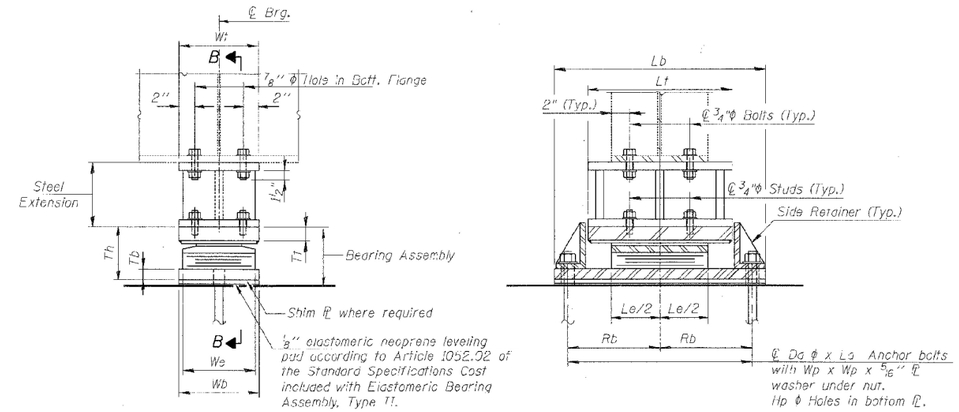

ELEVATION AT PIER

SECTION B-B

TYPE II ELASTOMERIC EXP. BRG.

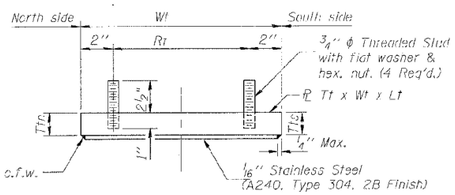

TOP BEARING ASSEMBLY FOR TYPE II BEARINGS

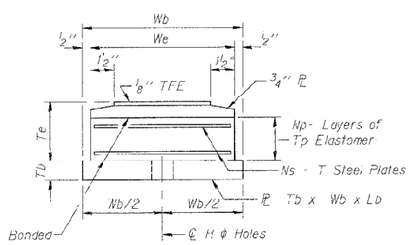

BOTTOM BEARING ASSEMBLY

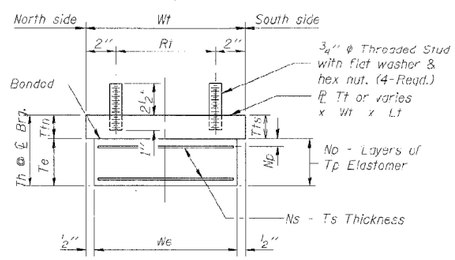

BEARING ASSEMBLY

Note: Shim plates shall not be placed under Bearing Assembly.

Notes:

Anchor bolts shall be ASTM F1554 all-thread (or an Engineer-approved alternate material) of the grade(s) and diameter(s) specified. ASTM A307 Grade C anchor bolts may be used in lieu of ASTM F1554 Grade 36 (Fy=36ksi). The corresponding specified grade of AASHTO M314 anchor bolts may be used in lieu of ASTM F1554.

Anchor bolts for side retainers may be cast in place or installed in holes drilled before or after members are in place for Type I bearings.
Anchor bolts for Type II bearings shall be placed in holes drilled through the bottom bearing plate after members are in place. Side retainers shall be placed after bolts are installed.

Drilled and set anchor bolts shall be installed according to Article 521.06 of the Standard Specifications.

Field drills in bottom flanges, side retainers and other steel members (except steel extensions) required for the bearing assembly shall be included in the cost of Elastomeric Bearing Assembly, Type I or Type II.

The 1/8" TFE sheet shall be bonded directly to the top steel plate with a two-component, medium viscosity epoxy resin, conforming to the requirements of the Federal Specification MMM-A-134, Type I. The bond agent shall be applied on the full area of the contact surfaces.

Bonding of 1/8" TFE sheet during vulcanizing process will be permitted provided the process and method of adjusting assembly height is approved by the Engineer.

ELASTOMERIC BEARING SCHEDULE (TYPE I AND II)

	Bearing Location	Pier	Type	Bearing Designation	No. Req.'d	Th	Elastomeric Bearing							Top Plate					Bottom Plate			Anchor Bolts					Side Retainer				
							We	Le	Te	Tp	Np	Ts	Ns	Wt	Lt	Ttn	Tts	Rt	Wb	Lb	Tb	Da	La	Rb	H	Wp	y	z	t	Hp	v
NORTHBOUND	016-1110	2	I	15-c	8	7 5/16	15	24	4 1/2	3/4	5	3/16	4	16	26	3 1/8	3 1/8	12				1 1/2	18	15 7/8		3	2 3/4	5 1/2	5/8	1 3/4	6 15/16
		5	I	15-b	13	6 7/16	15	24	3 9/16	3/4	4	3/16	3	16	26	2 7/8	2 7/8	12				1 1/2	18	15 7/8		3	2 3/4	5 1/2	5/8	1 3/4	6 15/16
SOUTHBOUND	015-1110	2	I	15-c	8	7 5/8	15	24	4 1/2	3/4	5	3/16	4	16	26	3 1/4	3 1/8	12				1 1/2	18	15 7/8		3	2 3/4	5 1/2	5/8	1 3/4	8 1/8
		5	I	15-b	13	6 7/16	15	24	3 9/16	3/4	4	3/16	3	16	26	2 7/8	2 7/8	12				1 1/2	18	15 7/8		3	2 3/4	5 1/2	5/8	1 3/4	6 15/16

FOR INFORMATION ONLY

MODEL: Default
FILE NAME: pw:\\ildot-pw.bentley.com:PWIDOT\Documents\IDOT Offices\District 1\Projects\D101123\CADData\design\D101123-sht-details.dgn

USER NAME = Jacob.Roth	DESIGNED -	REVISED -	
	DRAWN -	REVISED -	
PLOT SCALE = 100.0000 ' / in.	CHECKED -	REVISED -	
PLOT DATE = 3/23/2023	DATE -	REVISED -	

STATE OF ILLINOIS
DEPARTMENT OF TRANSPORTATION

ELASTOMERIC BEARING DETAILS (2008)
STRUCTURE NO. 016-1110

SCALE: | SHEET OF SHEETS | STA. TO STA.

F.A.I. RTE.	SECTION	COUNTY	TOTAL SHEETS	SHEET NO.
94	FAI 90 / 94 22 BP	COOK	22	22
		CONTRACT NO. 62U18		
		ILLINOIS	FED. AID PROJECT	