06-16-2023 LETTING ITEM 068

F.A.P RTE.	SECTION	COUNTY	TOTAL SHEETS	SHEET NO.
322	50,51,52 RS-3	MACON	79	1
	ILLINOIS	CONTRACT NO. 74800		

STATE OF ILLINOIS
DEPARTMENT OF TRANSPORTATION

D-97-021-17

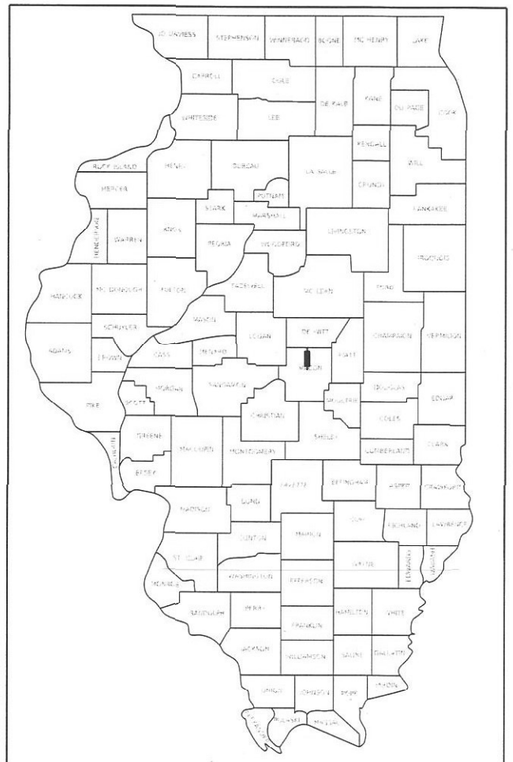

LOCATION OF SECTION INDICATED THUS:-

FOR INDEX OF SHEETS, SEE SHEET NO. 2

ADT = 11,400 (2021)

PROPOSED HIGHWAY PLANS

FAP ROUTE 322 (US 51)
SECTION 50, 51, 52 RS–3
PROJECT NHPP–N8RC(715)
DESIGNED OVERLAY
MACON COUNTY

C–97–053–17

SECTION 50,51,52 RS–3 ENDS
STATION 288 + 51.00
NORTHBOUND & SOUTHBOUND

BRIDGE OMISSION: S.N. 058–0118 (NB) & S.N. 058–0117 (SB)
STATION 262 + 10.18 TO STATION 263 + 01.35 (NB)
STATION 261 + 83.97 TO STATION 262 + 75.14 (SB)

BRIDGE OMISSION: S.N. 058–0114 (NB) & S.N. 058–0113 (SB)
STATION 424 + 50.07 TO STATION 425 + 54.32 (NB)
STATION 423 + 89.66 TO STATION 424 + 93.91 (SB)

SECTION 50,51,52 RS–3 BEGINS
STATION 265 + 10.00
NORTHBOUND & SOUTHBOUND

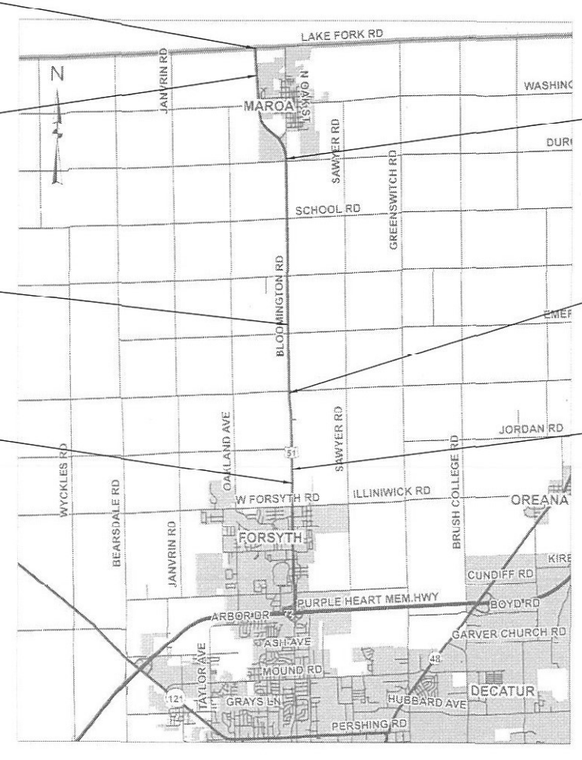

STATION EQUATION:
STATION 574 + 01.69(BK) = STATION 174 + 89.59(AH)

STATION EQUATION:
STATION 357 + 93.80(BK) = STATION 357 + 91.02(AH)

STATION EQUATION:
STATION 273 + 82.08(BK) = STATION 273 + 79.78(AH)

GROSS LENGTH = 42,257.18 FT. = 8.003 MILE
NET LENGTH = 42061.76 FT. = 7.966 MILE

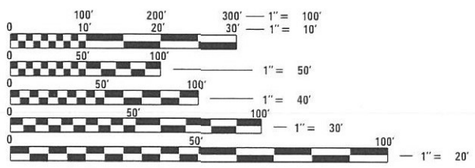

FULL SIZE PLANS HAVE BEEN PREPARED USING STANDARD ENGINEERING SCALES. REDUCED SIZED PLANS WILL NOT CONFORM TO STANDARD SCALES. IN MAKING MEASUREMENTS ON REDUCED PLANS, THE ABOVE SCALES MAY BE USED.

J.U.L.I.E.
JOINT UTILITY LOCATION INFORMATION FOR EXCAVATORS
1–800–892–0123
OR 811

STATE OF ILLINOIS
DEPARTMENT OF TRANSPORTATION

SUBMITTED April 6 20 23
Jeffrey P Myers
REGIONAL ENGINEER

May 12, 2023
Jack A. Elis
ENGINEER OF DESIGN AND ENVIRONMENT

May 12, 2023
Stephen M Travis
DIRECTOR OF HIGHWAYS PROJECT IMPLEMENTATION

PROJECT ENGINEER: MATT BOWER
PROJECT MANAGER: DALTON LANE

CONTRACT NO. 74800

PRINTED BY THE AUTHORITY OF THE STATE OF ILLINOIS

GENERAL NOTES

THIS PROJECT IS LOCATED ON US 51 IN MACON COUNTY. THE WORK INCLUDED IN THIS PROJECT IS CLASS A & D PATCHING, PIPE UNDERDRAIN REPLACEMENT, MILLING, RESURFACING, AGGREGATE WEDGE SHOULDERS, PAVEMENT MARKING, AND OTHER WORK NECESSARY TO COMPLETE THIS SECTION.

THE PROPOSED PROJECT BEGINS 0.1 MILES NORTH OF FORSYTH ROAD AND EXTENDS NORTH 8.0 MILES TO DEWITT COUNTY LINE.

THE EXISTING PAVEMENT SHALL BE PATCHED IN ACCORDANCE WITH SECTION 442 OF THE STANDARD SPECIFICATIONS AND THE SPECIAL PROVISIONS. THE QUANTITY OF PATCHING SHOWN ON THE PLANS IS AN ESTIMATE. THE FINAL LOCATIONS AND QUANTITY SHALL BE DETERMINED BY THE ENGINEER IN THE FIELD.

RAISED REFLECTIVE PAVEMENT MARKERS SHALL BE PLACED AS DOUBLE MARKERS AS SHOWN IN STANDARD 781001.

THE FOLLOWING RATES OF APPLICATION HAVE BEEN USED IN CALCULATING PLAN QUANTITIES:

AGGREGATE SHOULDERS	2.05 TONS/CU. YD.
BITUMINOUS MATERIALS (TACK COAT)	
MILLED SURFACE OR CONCRETE	0.05 LBS/SQ FT
BETWEEN HMA LIFTS	0.025 LBS/SQ FT
HOT-MIX ASPHALT	112 LBS/SQ YD/INCH

MANDATORY SEQUENCE OF OPERATIONS

1. PERFORM SURFACE REMOVAL AND PAVING OPERATIONS ON HOT-MIX ASPHALT SHOULDERS FIRST. SURFACE REMOVAL OF 1 ½" AND INLAY OF 1 ½".

SUGGESTED SEQUENCE OF REMAINING OPERATIONS

1. PERFORM PATCHING OPERATIONS THROUGHOUT THIS SECTION.
2. PERFORM UNDERDRAIN REPLACEMENT OPERATIONS THROUGHOUT THIS SECTION.
3. PERFORM SURFACE REMOVAL OPERATIONS ON THE EXISTING NORTHBOUND HMA SECTION AND PLACE FIRST HMA LIFT OVER MILLED SURFACES.
4. PERFORM FIRST LIFT PAVING OPERATIONS ON THE REMAINING MAINLINE AND SHOULDERS.
5. PLACE LONGITUDINAL JOINT SEALANT OVER CL JOINTS.
6. PLACE SURFACE LIFT ON MAINLINE AND SHOULDERS.
7. PERFORM INCIDENTIAL HMA RESURFACING.
8. CONSTRUCT AGGREGATE WEDGE SHOULDERS, PAVEMENT MARKING, AND RUMBLE STRIPS.

THE FOLLOWING MIXTURE REQUIREMENTS ARE APPLICABLE TO THIS PROJECT:

LOCATION(S)	MIXTURE USE(S)	PG	DESIGN AIR VOIDS	MIXTURE COMPOSITION	FRICTION AGGREGATE	MIXTURE WEIGHT	QUALITY MANAGEMENT PROGRAM	SUBLOT SIZE	MATERIAL TRANSFER DEVICE (REQUIRED?)
MAINLINE	POLYMERIZED HMA SURFACE COURSE, IL-9.5, MIX "D", N90 (2")	SBS PG 70-22	4.0% @ N=90	IL - 9.5	MIXTURE D	N90	PFP	1000	N/A
MAINLINE	POLYMERIZED HMA BINDER COURSE, IL-9.5FG, N90 (1 3/4")	SBS PG 70-22	4.0% @ N=90	IL - 9.5FG	N/A	N90	PFP	1000	N/A
HMA SHOULDERS	HOT-MIX ASPHALT SHOULDERS (TOP LIFT)	PG 64-22	4.0% @ N=70	IL - 9.5	MIXTURE C	N70	QC/QA	3000	N/A
HMA SHOULDERS	HOT-MIX ASPHALT SHOULDERS (BOTTOM LIFT)	PG 64-22	4.0% @ N=70	IL - 9.5FG	N/A	N70	QC/QA	3000	N/A
MAINLINE	CLASS "D" PATCHING	PG 64-22	4.0% @ N=90	IL - 19.0	N/A	N90	QC/QA	3000	N/A
INCIDENTAL	INCIDENTAL HOT-MIX ASPHALT SURFACING	PG 64-22	4.0% @ N=70	IL - 9.5	MIXTURE C	N70	QC/QA	3000	N/A

INDEX OF SHEETS

HIGHWAY STANDARDS

STD. NO.	DESCRIPTION
000001-08	STANDARD SYMBOLS, ABBREVIATIONS AND PATTERNS
001006	DECIMAL OF AN INCH AND OF A FOOT
442201-03	CLASS C AND D PATCHES
601001-05	PIPE UNDERDRAINS
606001-08	CONCRETE CURB TYPE B AND COMBINATION CONCRETE CURB AND GUTTER
606301-04	PC CONCRETE ISLANDS AND MEDIANS
606306-04	CORRUGATED PCC MEDIANS
642001-03	SHOULDER RUMBLE STRIPS, 16 IN.
701101-05	OFF-ROAD OPERATIONS, MULTILANE, 15' TO 24" FROM PAVEMENT EDGE
701106-02	OFF-ROAD OPERATIONS, MULTILANE, MORE THAN 15' AWAY
701400-11	APPROACH TO LANE CLOSURE, FREEWAY/EXPRESSWAY
701401-13	LANE CLOSURE, FREEWAY/EXPRESSWAY
701426-09	LANE CLOSURE, MULTILANE, INTERMITTENT OR MOVING OPERATION, FOR SPEEDS >=45 MPH
701901-08	TRAFFIC CONTROL DEVICES
780001-05	TYPICAL PAVEMENT MARKINGS
781001-04	TYPICAL APPLICATIONS RAISED REFLECTIVE PAVEMENT MARKERS
782001-01	CURB REFLECTORS
420001-10	PAVEMENT JOINTS
420701-03	PAVEMENT WELDED WIRE REINFORCEMENT
667101-02	PERMANENT SURVEY MARKERS

REV. - MS

80% FED
20% STATE

SUMMARY OF QUANTITIES

CODE NO	ITEM	UNIT	TOTAL QUANTITIES	CONSTRUCTION TYPE CODE 0005 URBAN	0005 RURAL	
40200800	AGGREGATE SURFACE COURSE, TYPE B	TON	50		50	
40600290	BITUMINOUS MATERIALS (TACK COAT)	POUND	291204	8436	282768	
40600370	LONGITUDINAL JOINT SEALANT	FOOT	99478	2486	96992	
40600985	PORTLAND CEMENT CONCRETE SURFACE REMOVAL - BUTT JOINT	SQ YD	1654	267	1387	
40600990	TEMPORARY RAMP	SQ YD	320	44	276	
40603219	POLYMERIZED HOT-MIX ASPHALT BINDER COURSE, IL-9.5FG, N90	TON	23969	617	23352	
40604164	POLYMERIZED HOT-MIX ASPHALT SURFACE COURSE, IL-9.5, MIX "D", N90	TON	27614	740	26874	
40800050	INCIDENTAL HOT-MIX ASPHALT SURFACING	TON	949		949	
44000155	HOT-MIX ASPHALT SURFACE REMOVAL, 1 1/2"	SQ YD	186162	4535	181627	
44000500	COMBINATION CURB AND GUTTER REMOVAL	FOOT	74		74	
X4420720	CLASS C PATCHES, TYPE III, 9 INCH (SPECIAL)	SQ YD	77		77	
44201887	CLASS D PATCHES, TYPE II, 20 INCH	SQ YD	212		212	

80% FED
20% STATE

SUMMARY OF QUANTITIES

CODE NO	ITEM	UNIT	TOTAL QUANTITIES	CONSTRUCTION TYPE CODE 0005 URBAN	0005 RURAL	
44213000	PATCHING REINFORCEMENT	SQ YD	4076	63	4013	
44213200	SAW CUTS	FOOT	14661	330	14331	
44213204	TIE BARS 3/4"	EACH	237		237	
48102100	AGGREGATE WEDGE SHOULDER, TYPE B	TON	7050	224	6826	
48203100	HOT-MIX ASPHALT SHOULDERS	TON	40592	1310	39282	
50800105	REINFORCEMENT BARS	POUND	9861		9861	
60100070	SHOULDER REMOVAL AND REPLACEMENT	FOOT	146631		146631	
60108200	PIPE UNDERDRAINS 6" (SPECIAL)	FOOT	5984		5984	
60605000	COMBINATION CONCRETE CURB AND GUTTER, TYPE B-6.24	FOOT	74		74	
60624600	CORRUGATED MEDIAN	SQ FT	161		161	
64200116	SHOULDER RUMBLE STRIPS, 16 INCH	FOOT	146260	4972	141288	
67000400	ENGINEER'S FIELD OFFICE, TYPE A	CAL MO	12	4	8	
67000600	ENGINEER'S FIELD LABORATORY	CAL MO	12	4	8	

REV. - MS

80% FED
20% STATE

SUMMARY OF QUANTITIES

CODE NO	ITEM	UNIT	TOTAL QUANTITIES	CONSTRUCTION TYPE CODE 0005 URBAN	0005 RURAL	
67100100	MOBILIZATION	L SUM	1	0.25	0.75	
70100310	TRAFFIC CONTROL AND PROTECTION, STANDARD 701421	L SUM	1		1	
70100800	TRAFFIC CONTROL AND PROTECTION, STANDARD 701401	L SUM	1	0.25	0.75	
70107025	CHANGEABLE MESSAGE SIGN	CAL DA	28	14	14	
70300100	SHORT TERM PAVEMENT MARKING	FOOT	28469	696	27773	
70300150	SHORT TERM PAVEMENT MARKING REMOVAL	SQ FT	9489	232	9257	
70306100	TEMPORARY PAVEMENT MARKING LETTERS AND SYMBOLS - TYPE III TAPE	SQ FT	2231		2231	
70306120	TEMPORARY PAVEMENT MARKING - LINE 4" - TYPE III TAPE	FOOT	382		382	
70306130	TEMPORARY PAVEMENT MARKING - LINE 6" - TYPE III TAPE	FOOT	175994	4972	171022	
70306140	TEMPORARY PAVEMENT MARKING - LINE 8" - TYPE III TAPE	FOOT	3219		3219	
70306160	TEMPORARY PAVEMENT MARKING - LINE 12"- TYPE III TAPE	FOOT	1506		1506	

80% FED
20% STATE

SUMMARY OF QUANTITIES

CODE NO	ITEM	UNIT	TOTAL QUANTITIES	CONSTRUCTION TYPE CODE 0005 URBAN	0005 RURAL	
70306210	TEMPORARY PAVEMENT MARKING - LINE 24"- TYPE III TAPE	FOOT	152		152	
78000100	THERMOPLASTIC PAVEMENT MARKING - LETTERS AND SYMBOLS	SQ FT	2231		2231	
* 78000200	THERMOPLASTIC PAVEMENT MARKING - LINE 4"	FOOT	382		382	
* 78000400	THERMOPLASTIC PAVEMENT MARKING - LINE 6"	FOOT	175994	4972	171022	
* 78000500	THERMOPLASTIC PAVEMENT MARKING - LINE 8"	FOOT	3219		3219	
* 78000600	THERMOPLASTIC PAVEMENT MARKING - LINE 12"	FOOT	1506		1506	
* 78000650	THERMOPLASTIC PAVEMENT MARKING - LINE 24"	FOOT	152		152	
* 78004230	PREFORMED PLASTIC PAVEMENT MARKING, TYPE B - INLAID - LINE 6"	FOOT	21031	621	20410	
* 78011000	GROOVING FOR RECESSED PAVEMENT MARKING, LETTERS AND SYMBOLS	SQ FT	2231		2231	
* 78011025	GROOVING FOR RECESSED PAVEMENT MARKING 5"	FOOT	382		382	
* 78011035	GROOVING FOR RECESSED PAVEMENT MARKING 7"	FOOT	175994	4972	171022	
* 78011045	GROOVING FOR RECESSED PAVEMENT MARKING 9"	FOOT	3219		3219	

* SPECIALTY ITEM

REV. - MS

MODEL: Default
FILE NAME: pw:\\ildot-pw.bentley.com:PWIDOT\Documents\IDOT Offices\District 7\Projects\74800\CADData\CADsheets\D774800-sht-SOQ.dgn

USER NAME = Mona.Steffen	DESIGNED -	REVISED -	STATE OF ILLINOIS DEPARTMENT OF TRANSPORTATION
	DRAWN -	REVISED -	
PLOT SCALE = 100.0000 ' / in.	CHECKED -	REVISED -	
PLOT DATE = 4/6/2023	DATE -	REVISED -	

SUMMARY OF QUANTITIES

SCALE: | SHEET 2 OF 3 SHEETS | STA. TO STA.

F.A.P RTE.	SECTION	COUNTY	TOTAL SHEETS	SHEET NO.
322	50,51,52 RS-3	MACON	79	4

CONTRACT NO. 74800

ILLINOIS | FED. AID PROJECT

80% FED
20% STATE

SUMMARY OF QUANTITIES

	CODE NO	ITEM	UNIT	TOTAL QUANTITIES	CONSTRUCTION TYPE CODE 0005 URBAN	0005 RURAL	
*	78011065	GROOVING FOR RECESSED PAVEMENT MARKING 13"	FOOT	1506		1506	
*	78011125	GROOVING FOR RECESSED PAVEMENT MARKING 25"	FOOT	152		152	
*	78100100	RAISED REFLECTIVE PAVEMENT MARKER	EACH	2305	62	2243	
*	78200020	CURB REFLECTORS	EACH	40		40	
	78300200	RAISED REFLECTIVE PAVEMENT MARKER REMOVAL	EACH	1254	32	1222	
*	X0322278	RODENT SHIELDS	EACH	319		319	
	X0325279	CLASS SI CONCRETE (MISCELLANEOUS)	CU YD	416		416	
	X0326440	SURFACE REMOVAL, VARIABLE DEPTH (SPECIAL)	SQ YD	6450		6450	
	X1200107	PIPE UNDERDRAINS 6" (MODIFIED)	FOOT	144411		144411	
	X4060995	TEMPORARY RAMP (SPECIAL)	SQ YD	2220		2220	
	X4402805	ISLAND REMOVAL	SQ FT	695		695	
	X4420543	CLASS A PATCHES, TYPE I, 9 INCH (SPECIAL)	SQ YD	770	29	741	
	X4420545	CLASS A PATCHES, TYPE II, 9 INCH (SPECIAL)	SQ YD	1250	35	1215	
	X4420547	CLASS A PATCHES, TYPE III, 9 INCH (SPECIAL)	SQ YD	281		281	

80% FED
20% STATE

SUMMARY OF QUANTITIES

	CODE NO	ITEM	UNIT	TOTAL QUANTITIES	CONSTRUCTION TYPE CODE 0005 URBAN	0005 RURAL	
	X4420549	CLASS A PATCHES, TYPE IV, 9 INCH (SPECIAL)	SQ YD	1775		1775	
	X5012650	CONCRETE HEADWALL REMOVAL (SPECIAL)	EACH	216		216	
	X5503101	PLUG EXISTING PIPE	CU YD	2		2	
	X6050310	FILLING INLETS, SPECIAL	EACH	8		8	
	X6060500	CORRUGATED MEDIAN REMOVAL	SQ FT	161		161	
	X6061800	CONCRETE MEDIAN, TYPE SB (DOWELLED)	SQ FT	432		432	
	Z0001700	APPROACH SLAB REPAIR (FULL DEPTH)	SQ YD	12		12	
	Z0001800	APPROACH SLAB REPAIR (PARTIAL DEPTH)	SQ YD	11		11	
	Z0049799	PROTECTING OR RESETTING SURVEY MARKERS	EACH	12		12	
	Z0070202	SURVEY MARKER VAULT	EACH	11		11	
Ø	Z0076600	TRAINEES	HOUR	500	500		
Ø	Z0076604	TRAINEES TRAINING PROGRAM GRADUATE	HOUR	500	500		

* SPECIALTY ITEM

Ø 0042

REV. - MS

USER NAME = Mona.Steffen	DESIGNED -	REVISED -	
	DRAWN -	REVISED -	
PLOT SCALE = 100.0000 ' / in.	CHECKED -	REVISED -	
PLOT DATE = 4/6/2023	DATE -	REVISED -	

STATE OF ILLINOIS
DEPARTMENT OF TRANSPORTATION

SUMMARY OF QUANTITIES

SCALE: | SHEET 3 OF 3 SHEETS | STA. TO STA.

F.A.P RTE.	SECTION	COUNTY	TOTAL SHEETS	SHEET NO.
322	50,51,52 RS-3	MACON	79	5

CONTRACT NO. 74800

ILLINOIS | FED. AID PROJECT

MODEL: Default
FILE NAME: pw:\\ildot-pw.bentley.com:PWIDOT\Documents\IDOT Offices\District 7\Projects\74800\CADData\CADsheets\0774800-sht-SOQ.dgn

EXISTING TYPICAL CROSS SECTION

STATION	TO	STATON
265+10		434+02

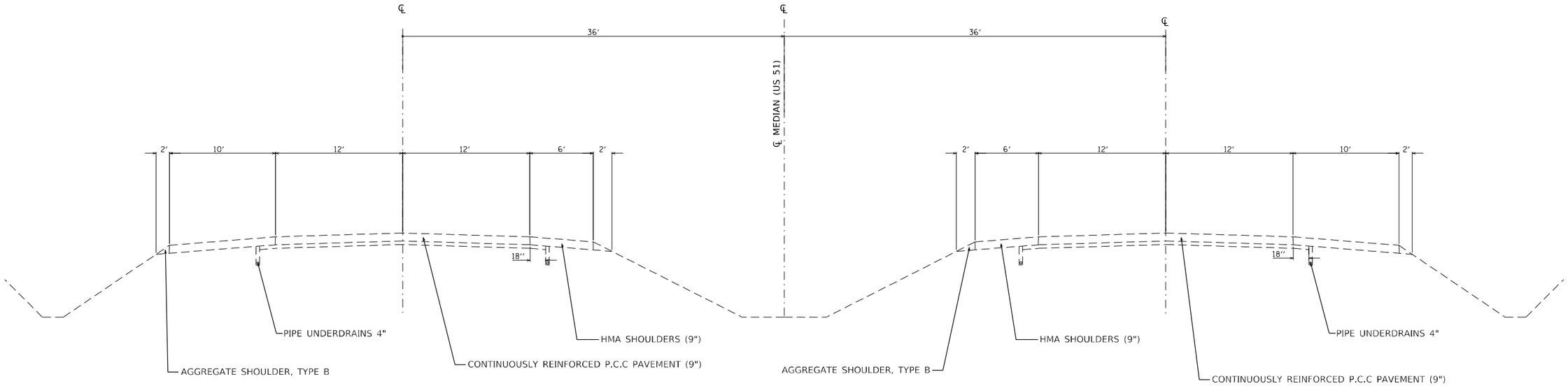

PROPOSED TYPICAL CROSS SECTION

STATION	TO	STATON
265+10		434+02

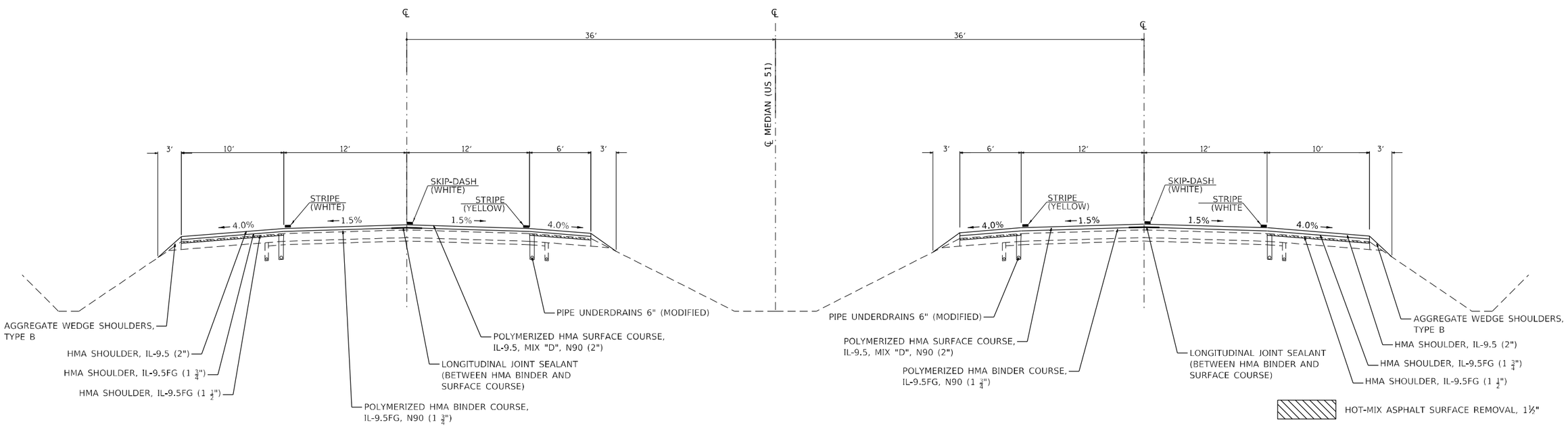

MODEL: Default
FILE NAME: pw:\\ildot-pw.bentley.com:PWIDOT\Documents\IDOT Offices\District 7\Projects\74800\CADData\CADsheets\0774800-sht-typicalt.dgn

USER NAME = Mona.Steffen	DESIGNED -	REVISED -	
	DRAWN -	REVISED -	
PLOT SCALE = 100.0000 ' / in.	CHECKED -	REVISED -	
PLOT DATE = 4/6/2023	DATE -	REVISED -	

STATE OF ILLINOIS
DEPARTMENT OF TRANSPORTATION

TYPICAL SECTION

SCALE: | SHEET 1 OF 5 SHEETS | STA. TO STA.

F.A.P. RTE.	SECTION	COUNTY	TOTAL SHEETS	SHEET NO.
322	50,51,52 RS-3	MACON	79	6

CONTRACT NO. 74800

ILLINOIS | FED. AID PROJECT

EXISTING TYPICAL CROSS SECTION

STATION	TO	STATON
434+02		455+50
468+00		471+25
481+00		572+54

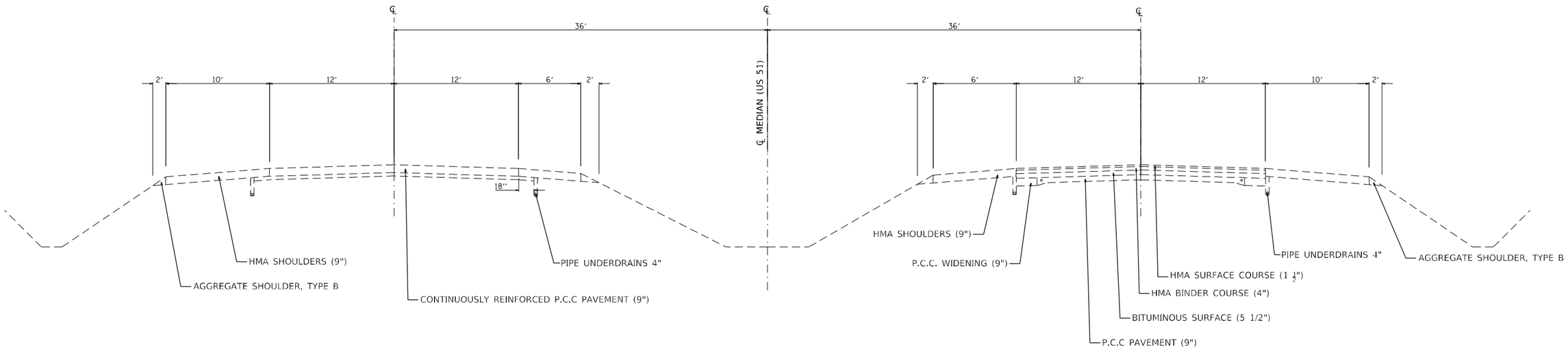

PROPOSED TYPICAL CROSS SECTION

STATION	TO	STATON
434+02		455+50
468+00		471+25
481+00		572+54

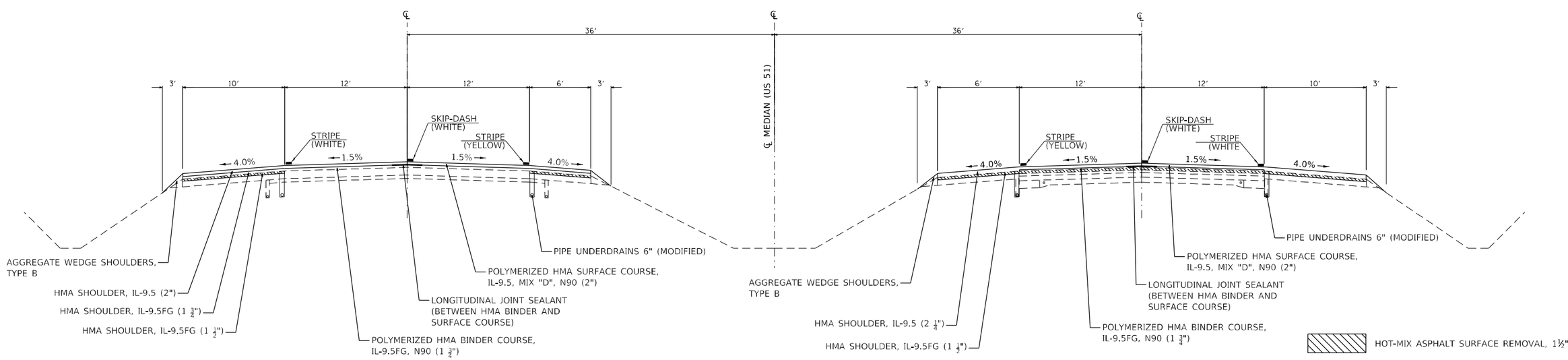

MODEL: Default
FILE NAME: pw:\\ildot-pw.bentley.com:PWIDOT\Documents\IDOT Offices\District 7\Projects\74800\CADData\CADsheets\0774800-sht-typicals.dgn

USER NAME = Mona,Steffen	DESIGNED -	REVISED -	STATE OF ILLINOIS DEPARTMENT OF TRANSPORTATION	TYPICAL SECTION	F.A.P. RTE.	SECTION	COUNTY	TOTAL SHEETS / SHEET NO.
	DRAWN -	REVISED -			322	50,51,52 RS-3	MACON	79 / 7
PLOT SCALE = 100.0000 ' / in.	CHECKED -	REVISED -					CONTRACT NO. 74800	
PLOT DATE = 4/6/2023	DATE -	REVISED -		SCALE: SHEET 2 OF 5 SHEETS STA. TO STA.			ILLINOIS	FED. AID PROJECT

EXISTING TYPICAL CROSS SECTION

STATION	TO	STATON
455+50		468+00
471+25		481+00

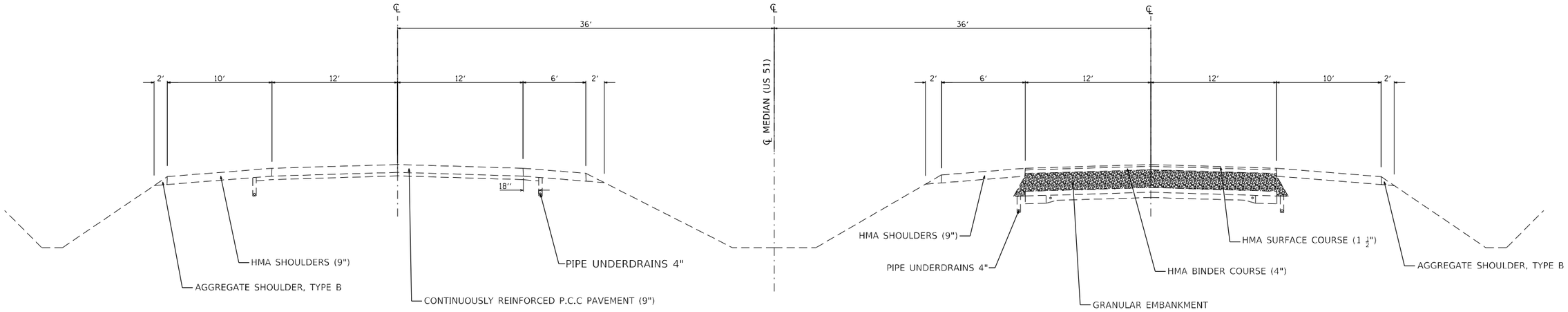

PROPOSED TYPICAL CROSS SECTION

STATION	TO	STATON
455+50		468+00
471+25		481+00

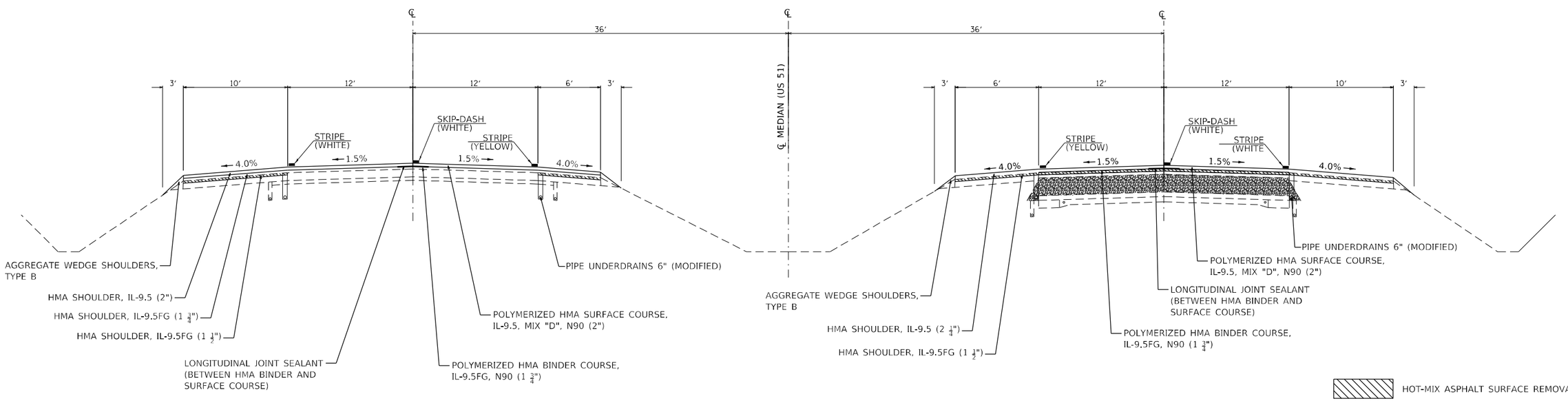

HOT-MIX ASPHALT SURFACE REMOVAL, 1½"

MODEL: Default
FILE NAME: pw:\\ildot-pw.bentley.com:PWIDOT\Documents\IDOT Offices\District 7\Projects\74800\CADData\CADsheets\0774800-sht-typicals.dgn

USER NAME = Mona,Steffen	DESIGNED -	REVISED -	
	DRAWN -	REVISED -	
PLOT SCALE = 100.0000 ' / in.	CHECKED -	REVISED -	
PLOT DATE = 4/6/2023	DATE -	REVISED -	

STATE OF ILLINOIS
DEPARTMENT OF TRANSPORTATION

TYPICAL SECTION

SCALE: | SHEET 3 OF 5 SHEETS | STA. TO STA.

F.A.P. RTE.	SECTION	COUNTY	TOTAL SHEETS	SHEET NO.
322	50,51,52 RS-3	MACON	79	8

CONTRACT NO. 74800

ILLINOIS | FED. AID PROJECT

EXISTING TYPICAL CROSS SECTION

STATION	TO	STATON	
174+89.59		199+49.69	CURVE LEFT
207+96.58		226+39.68	CURVE RIGHT

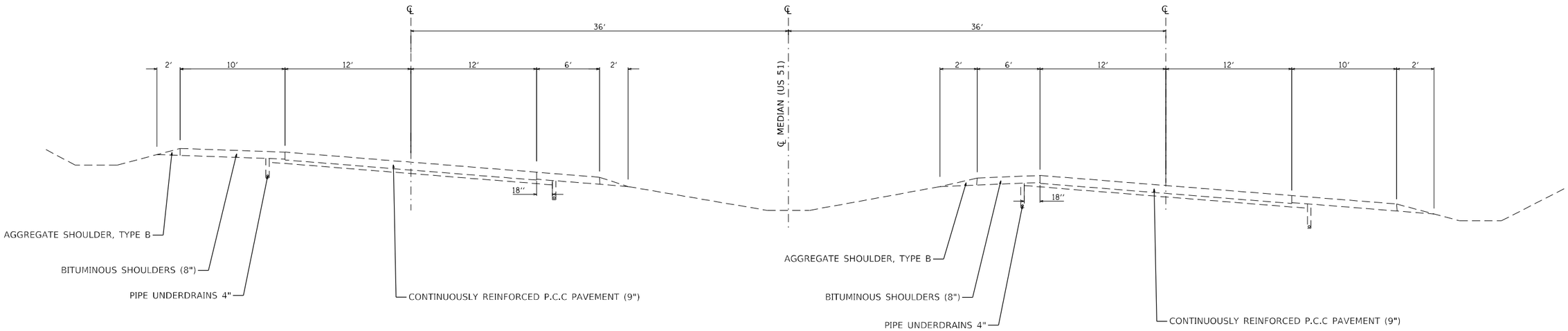

PROPOSED TYPICAL CROSS SECTION

STATION	TO	STATON	
174+89.59		199+49.69	CURVE LEFT
207+96.58		226+39.68	CURVE RIGHT

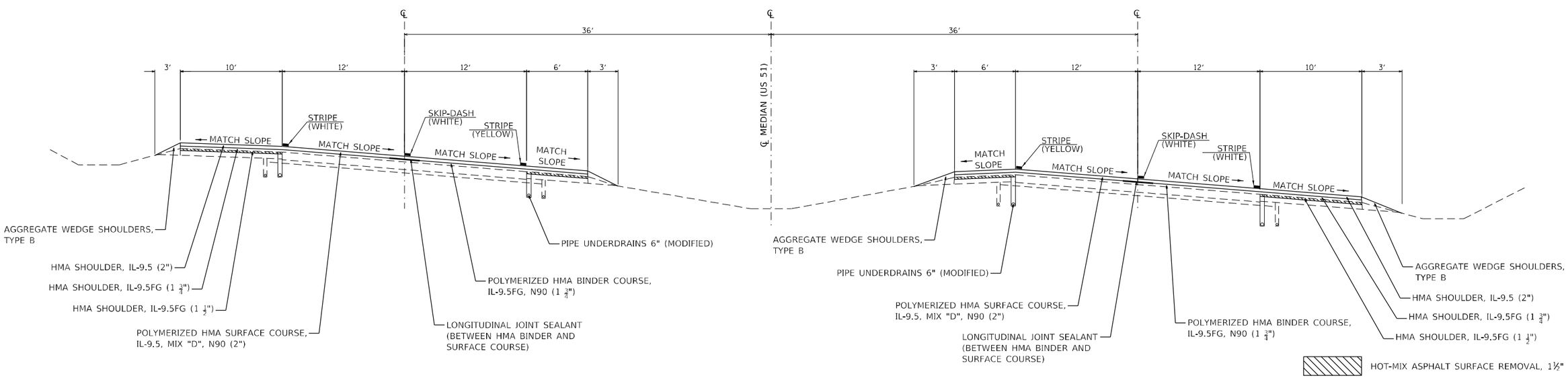

MODEL: Default
FILE NAME: pw:\\ildot-pw.bentley.com:PWIDOT\Documents\IDOT Offices\District 7\Projects\74800\CADData\CADsheets\D774800-sht-typicals.dgn

USER NAME = Mona.Steffen	DESIGNED -	REVISED -	
	DRAWN -	REVISED -	
PLOT SCALE = 100.0000 ' / in.	CHECKED -	REVISED -	
PLOT DATE = 4/6/2023	DATE -	REVISED -	

STATE OF ILLINOIS
DEPARTMENT OF TRANSPORTATION

TYPICAL SECTION

SCALE: | SHEET 4 OF 5 SHEETS | STA. TO STA.

F.A.P. RTE.	SECTION	COUNTY	TOTAL SHEETS	SHEET NO.
322	50,51,52 RS-3	MACON	79	9
		CONTRACT NO. 74800		
		ILLINOIS	FED. AID PROJECT	

EXISTING TYPICAL CROSS SECTION

STATION	TO	STATON
572+54		174+89.59**
199+49.69		207+96.58
226+39.68		288+51

**STA. EQU. 574+01.69 BK =174+89.59 AH

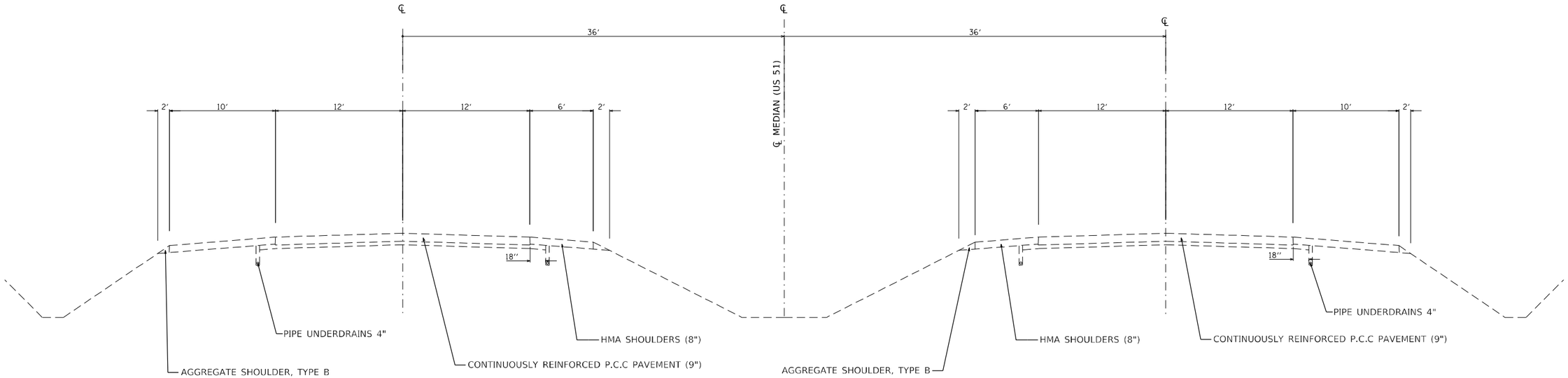

PROPOSED TYPICAL CROSS SECTION

STATION	TO	STATON
572+54		174+89.59**
199+49.69		207+96.58
226+39.68		288+51

**STA. EQU. 574+01.69 BK =174+89.59 AH

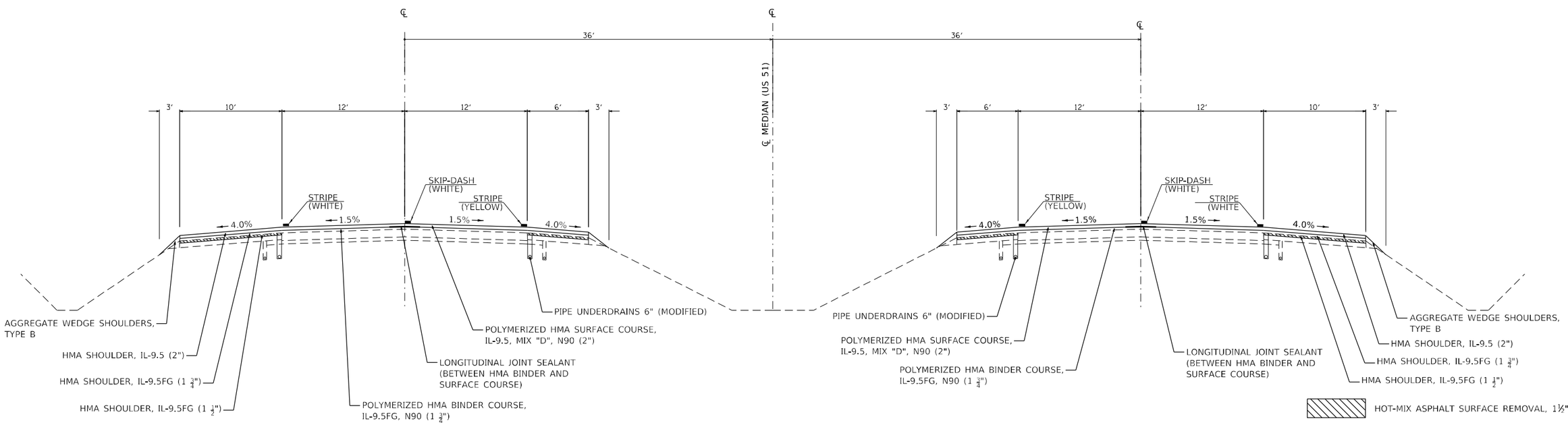

USER NAME = Mona,Steffen	DESIGNED -	REVISED -	STATE OF ILLINOIS DEPARTMENT OF TRANSPORTATION	TYPICAL SECTION	F.A.P. RTE.	SECTION	COUNTY	TOTAL SHEETS	SHEET NO.
	DRAWN -	REVISED -			322	50,51,52 RS-3	MACON	79	10
PLOT SCALE = 100.0000 ' / in.	CHECKED -	REVISED -					CONTRACT NO. 74800		
PLOT DATE = 4/6/2023	DATE -	REVISED -		SCALE: SHEET 5 OF 5 SHEETS STA. TO STA.			ILLINOIS FED. AID PROJECT		

MODEL: Default
FILE NAME: pw:\\ildot-pw.bentley.com:PWIDOT\Documents\IDOT Offices\District 7\Projects\74800\CADData\CADsheets\0774800-sht-typicals.dgn

PATCH NUMBER	LANE	STATION	LENGTH (FOOT)	WIDTH (FOOT)	DEPTH (INCH)	CLASS A PATCHES, TYPE 1, 9" (SPECIAL) (SQ YD)	CLASS A PATCHES, TYPE 2, 9" (SPECIAL) (SQ YD)	CLASS A PATCHES, TYPE 3, 9" (SPECIAL) (SQ YD)	CLASS A PATCHES, TYPE 4, 9" (SPECIAL) (SQ YD)	PATCHING REINFORCEMENT (SQ YD)	SAW CUTS (FOOT)
US 51 NORTHBOUND											
1	DL	267+28	6.0	12.0	9.0		8.0			8.0	36.0
2	DL	267+80	6.0	6.0	9.0	4.0				4.0	24.0
					URBAN TOTAL =	4.0	8.0			12.0	60.0
3	DL	281+95	40.0	6.0	9.0				26.7	26.7	92.0
4	DL	282+95	6.0	6.0	9.0	4.0				4.0	24.0
5	DL	283+32	10.0	6.0	9.0		6.7			6.7	32.0
6	DL	283+69	6.0	6.0	9.0	4.0				4.0	24.0
7	DL	283+72	7.0	12.0	9.0		9.3			9.3	38.0
8	DL	284+85	6.0	6.0	9.0	4.0				4.0	24.0
9	DL	285+60	9.0	6.0	9.0		6.0			6.0	30.0
10	DL	294+70	6.0	6.0	9.0	4.0				4.0	24.0
11	DL	295+00	20.0	6.0	9.0		13.3			13.3	52.0
12	DL	295+19	6.0	12.0	9.0		8.0			8.0	36.0
13	DL	295+52	25.0	6.0	9.0			16.7		16.7	62.0
14	PL	295+77	10.0	6.0	9.0		6.7			6.7	32.0
15	DL	296+55	35.0	6.0	9.0			23.3		23.3	82.0
16	DL	297+28	6.0	6.0	9.0	4.0				4.0	24.0
17	DL	297+60	6.0	12.0	9.0		8.0			8.0	36.0
18	DL	298+58	6.0	6.0	9.0	4.0				4.0	24.0
19	DL	321+71	6.0	6.0	9.0	4.0				4.0	24.0
20	DL	322+90	32.0	6.0	9.0			21.3		21.3	76.0
21	DL	324+26	6.0	12.0	9.0		8.0			8.0	36.0
22	DL	324+57	14.0	6.0	9.0		9.3			9.3	40.0
23	DL	325+86	10.0	6.0	9.0		6.7			6.7	32.0
24	DL	326+12	7.0	6.0	9.0	4.7				4.7	26.0
25	DL	326+89	10.0	6.0	9.0		6.7			6.7	32.0
26	DL	327+50	6.0	6.0	9.0	4.0				4.0	24.0
27	DL	329+67	6.0	6.0	9.0	4.0				4.0	24.0
28	DL	329+77	6.0	6.0	9.0	4.0				4.0	24.0
29	DL	330+53	6.0	6.0	9.0	4.0				4.0	24.0
30	PL	330+67	12.0	6.0	9.0		8.0			8.0	36.0
31	DL	330+80	6.0	6.0	9.0	4.0				4.0	24.0
32	DL	331+01	6.0	6.0	9.0	4.0				4.0	24.0
33	PL	331+10	19.0	6.0	9.0		12.7			12.7	50.0
34	DL	333+33	12.0	6.0	9.0		8.0			8.0	36.0
35	DL	334+42	6.0	6.0	9.0	4.0				4.0	24.0
36	DL	335+63	6.0	6.0	9.0	4.0				4.0	24.0
37	DL	335+97	6.0	6.0	9.0	4.0				4.0	24.0
38	PL	335+97	6.0	6.0	9.0	4.0				4.0	24.0
39	DL	336+08	6.0	6.0	9.0	4.0				4.0	24.0
40	DL	336+22	6.0	12.0	9.0		8.0			8.0	36.0
41	DL	336+30	6.0	12.0	9.0		8.0			8.0	36.0
42	DL	337+60	8.0	6.0	9.0		5.3			5.3	28.0
43	DL	341+10	10.0	6.0	9.0		6.7			6.7	32.0
44	PL	341+10	8.0	6.0	9.0		5.3			5.3	28.0
45	DL	342+65	6.0	6.0	9.0	4.0				4.0	24.0
46	DL	342+92	6.0	6.0	9.0	4.0				4.0	24.0
47	PL	343+00	20.0	6.0	9.0		13.3			13.3	52.0
48	PL	343+69	10.0	6.0	9.0		6.7			6.7	32.0
49	DL	344+15	7.0	6.0	9.0	4.7				4.7	26.0
50	PL	344+27	6.0	6.0	9.0	4.0				4.0	24.0
51	DL	344+70	24.0	6.0	9.0			16.0		16.0	60.0
52	PL	344+70	6.0	6.0	9.0	4.0				4.0	24.0
53	DL	355+10	22.0	6.0	9.0		14.7			14.7	56.0
54	RTL	355+20	38.0	8.5	9.0				35.9	35.9	93.0
55	RTL	357+50	9.0	6.0	9.0		6.0			6.0	30.0
56	RTL	357+86	50.0	12.0	9.0				66.7	66.7	124.0
57	DL	358+06	6.0	6.0	9.0	4.0				4.0	24.0
58	DL	358+14	6.0	6.0	9.0	4.0				4.0	24.0
59	RTL	358+36	21.0	6.0	9.0		14.0			14.0	54.0
60	DL	358+57	6.0	6.0	9.0	4.0				4.0	24.0
61	RTL	358+67	25.0	6.0	9.0			16.7		16.7	62.0
62	DL	358+85	6.0	6.0	9.0	4.0				4.0	24.0
63	DL	358+95	6.0	6.0	9.0	4.0				4.0	24.0
64	PL	359+13	6.0	6.0	9.0	4.0				4.0	24.0
65	PL	367+06	9.0	6.0	9.0		6.0			6.0	30.0
66	PL	367+26	9.0	6.0	9.0		6.0			6.0	30.0
67	DL	372+94	9.0	6.0	9.0		6.0			6.0	30.0
68	DL	373+17	6.0	12.0	9.0		8.0			8.0	36.0

PATCH NUMBER	LANE	STATION	LENGTH (FOOT)	WIDTH (FOOT)	DEPTH (INCH)	CLASS A PATCHES, TYPE 1, 9" (SPECIAL) (SQ YD)	CLASS A PATCHES, TYPE 2, 9" (SPECIAL) (SQ YD)	CLASS A PATCHES, TYPE 3, 9" (SPECIAL) (SQ YD)	CLASS A PATCHES, TYPE 4, 9" (SPECIAL) (SQ YD)	PATCHING REINFORCEMENT (SQ YD)	SAW CUTS (FOOT)
US 51 NORTHBOUND											
69	DL	381+50	12.0	6.0	9.0		8.0			8.0	36.0
70	DL	383+43	6.0	6.0	9.0	4.0				4.0	24.0
71	DL	383+50	6.0	6.0	9.0	4.0				4.0	24.0
72	DL	383+60	10.0	6.0	9.0		6.7			6.7	32.0
73	PL	386+65	6.0	6.0	9.0	4.0				4.0	24.0
74	DL	387+60	12.0	6.0	9.0		8.0			8.0	36.0
75	DL	391+35	6.0	6.0	9.0	4.0				4.0	24.0
76	PL	391+96	20.0	6.0	9.0		13.3			13.3	52.0
77	DL	392+76	6.0	6.0	9.0	4.0				4.0	24.0
78	DL	393+40	8.0	6.0	9.0		5.3			5.3	28.0
79	DL	396+50	20.0	6.0	9.0		13.3			13.3	52.0
80	DL	397+60	6.0	6.0	9.0	4.0				4.0	24.0
81	DL	397+74	6.0	6.0	9.0	4.0				4.0	24.0
82	DL	399+97	10.0	6.0	9.0		6.7			6.7	32.0
83	DL	404+56	6.0	6.0	9.0	4.0				4.0	24.0
84	DL	406+37	8.0	6.0	9.0		5.3			5.3	28.0
85	DL	406+51	6.0	12.0	9.0		8.0			8.0	36.0
86	DL	417+53	6.0	6.0	9.0	4.0				4.0	24.0
87	DL	422+70	6.0	6.0	9.0	4.0				4.0	24.0
88	PL	422+72	6.0	12.0	9.0		8.0			8.0	36.0
89	DL	426+09	6.0	12.0	9.0		8.0			8.0	36.0
90	PL	426+09	6.0	12.0	9.0		8.0			8.0	36.0
91	DL	432+59	6.0	6.0	9.0	4.0				4.0	24.0
92	DL	432+67	6.0	12.0	9.0		8.0			8.0	36.0
93	DL	432+82	9.0	6.0	9.0		6.0			6.0	30.0
94	DL	433+00	24.0	6.0	9.0			16.0		16.0	60.0
95	DL	433+16	16.0	6.0	9.0		10.7			10.7	44.0
96	DL	572+48	12.0	12.0	9.0			16.0		16.0	48.0
97	PL	572+48	17.0	12.0	9.0			22.7		22.7	58.0
98	DL	179+53	6.0	12.0	9.0		8.0			8.0	36.0
99	DL	188+15	52.0	6.0	9.0				34.7	34.7	116.0
100	DL	191+37	6.0	6.0	9.0	4.0				4.0	24.0
101	DL	191+60	6.0	6.0	9.0	4.0				4.0	24.0
102	DL	192+41	8.0	12.0	9.0		10.7			10.7	40.0
103	DL	193+12	6.0	6.0	9.0	4.0				4.0	24.0
104	DL	193+42	22.0	12.0	9.0				29.3	29.3	68.0
105	DL	193+65	45.0	6.0	9.0				30.0	30.0	102.0
106	DL	195+50	6.0	6.0	9.0	4.0				4.0	24.0
107	DL	214+60	6.0	12.0	9.0		8.0			8.0	36.0
108	PL	214+75	10.0	12.0	9.0		13.3			13.3	44.0
109	DL	214+75	7.0	12.0	9.0		9.3			9.3	38.0
110	DL	215+35	6.0	6.0	9.0	4.0				4.0	24.0
111	PL	222+40	10.0	12.0	9.0		13.3			13.3	44.0
112	DL	223+95	10.0	6.0	9.0		6.7			6.7	32.0
113	PL	223+95	12.0	6.0	9.0		8.0			8.0	36.0
114	PL	224+46	12.0	6.0	9.0		8.0			8.0	36.0
115	DL	224+60	6.0	6.0	9.0	4.0				4.0	24.0
116	DL	231+82	6.0	6.0	9.0	4.0				4.0	24.0
117	DL	232+25	6.0	6.0	9.0	4.0				4.0	24.0
118	PL	232+28	10.0	6.0	9.0		6.7			6.7	32.0
119	DL	232+32	6.0	6.0	9.0	4.0				4.0	24.0
120	DL	233+04	19.0	6.0	9.0		12.7			12.7	50.0
121	PL	233+50	11.0	6.0	9.0		7.3			7.3	34.0
122	DL	233+50	6.0	6.0	9.0	4.0				4.0	24.0
123	PL	234+38	6.0	6.0	9.0	4.0				4.0	24.0
124	DL	253+38	10.0	6.0	9.0		6.7			6.7	32.0
125	PL	266+52	6.0	12.0	9.0		8.0			8.0	36.0
126	PL	267+81	6.0	12.0	9.0		8.0			8.0	36.0
127	DL	268+25	6.0	6.0	9.0	4.0				4.0	24.0
128	DL	268+30	6.0	6.0	9.0	4.0				4.0	24.0
129	DL	275+10	6.0	12.0	9.0		8.0			8.0	36.0
130	DL	275+34	6.0	12.0	9.0		8.0			8.0	36.0
					RURAL TOTAL =	217.4	505.4	148.7	223.3	1094.8	4615.0
					NORTHBOUND TOTAL =	221.4	513.4	148.7	223.3	1106.8	4675.0

MODEL: Default
FILE NAME: pw:\\ildot-pw.bentley.com:PWIDOT\Documents\IDOT Offices\District 7\Projects\74800\CADData\CADsheets\0774800-sht-schedule.dgn

USER NAME = Mona,Steffen	DESIGNED -	REVISED -	
	DRAWN -	REVISED -	
PLOT SCALE = 100.0000 ' / in.	CHECKED -	REVISED -	
PLOT DATE = 4/6/2023	DATE -	REVISED -	

STATE OF ILLINOIS
DEPARTMENT OF TRANSPORTATION

SCHEDULE OF QUANTITIES

SCALE: | SHEET 1 OF 29 SHEETS | STA. TO STA.

F.A.P RTE.	SECTION	COUNTY	TOTAL SHEETS	SHEET NO.
322	50,51,52 RS-3	MACON	79	11
		CONTRACT NO. 74800		
		ILLINOIS FED. AID PROJECT		

PATCH NUMBER	LANE	STATION	LENGTH (FOOT)	WIDTH (FOOT)	DEPTH (INCH)	CLASS A PATCHES, TYPE 1, 9" (SPECIAL) (SQ YD)	CLASS A PATCHES, TYPE 2, 9" (SPECIAL) (SQ YD)	CLASS A PATCHES, TYPE 3, 9" (SPECIAL) (SQ YD)	CLASS A PATCHES, TYPE 4, 9" (SPECIAL) (SQ YD)	PATCHING REINFORCEMENT (SQ YD)	SAW CUTS (FOOT)
US 51 SOUTHBOUND											
131	DL	283+64	6.0	6.0	9.0	4.0				4.0	24.0
132	DL	281+82	10.0	6.0	9.0		6.7			6.7	32.0
133	DL	274+91	6.0	6.0	9.0	4.0				4.0	24.0
134	DL	274+85	6.0	6.0	9.0	4.0				4.0	24.0
135	DL	274+61	8.0	12.0	9.0		10.7			10.7	40.0
136	DL	272+71	6.0	6.0	9.0	4.0				4.0	24.0
137	DL	272+56	6.0	6.0	9.0	4.0				4.0	24.0
138	DL	254+50	20.0	6.0	9.0		13.3			13.3	52.0
139	DL	253+10	6.0	6.0	9.0	4.0				4.0	24.0
140	DL	252+88	6.0	6.0	9.0	4.0				4.0	24.0
141	DL	249+27	6.0	12.0	9.0		8.0			8.0	36.0
142	PL	249+17	6.0	12.0	9.0		8.0			8.0	36.0
143	DL	248+97	6.0	12.0	9.0		8.0			8.0	36.0
144	DL	239+05	20.0	12.0	9.0				26.7	26.7	64.0
145	DL	238+13	6.0	6.0	9.0	4.0				4.0	24.0
146	DL	237+14	6.0	6.0	9.0	4.0				4.0	24.0
147	DL	236+24	10.0	6.0	9.0		6.7			6.7	32.0
148	DL	233+59	21.0	6.0	9.0		14.0			14.0	54.0
149	PL	233+25	19.0	6.0	9.0		12.7			12.7	50.0
150	PL	232+74	20.0	6.0	9.0		13.3			13.3	52.0
151	DL	214+97	12.0	6.0	9.0		8.0			8.0	36.0
152	DL	207+36	11.0	6.0	9.0		7.3			7.3	34.0
153	PL	197+77	14.0	6.0	9.0		9.3			9.3	40.0
154	PL	197+50	327.0	12.0	9.0				436.0	436.0	678.0
155	DL	197+35	8.0	6.0	9.0		5.3			5.3	28.0
156	PL	196+90	35.0	12.0	9.0				46.7	46.7	94.0
157	DL	196+13	6.0	12.0	9.0		8.0			8.0	36.0
158	DL	195+56	224.0	6.0	9.0				149.3	149.3	460.0
159	PL	195+37	20.0	12.0	9.0				26.7	26.7	64.0
160	DL	193+14	16.0	6.0	9.0		10.7			10.7	44.0
161	DL	192+70	8.0	6.0	9.0		5.3			5.3	28.0
162	DL	190+13	6.0	6.0	9.0	4.0				4.0	24.0
163	PL	187+78	15.0	6.0	9.0		10.0			10.0	42.0
164	DL	187+63	6.0	6.0	9.0	4.0				4.0	24.0
165	DL	187+50	6.0	6.0	9.0	4.0				4.0	24.0
166	DL	184+92	16.0	6.0	9.0		10.7			10.7	44.0
167	PL	184+74	8.0	6.0	9.0		5.3			5.3	28.0
168	DL	182+61	8.0	6.0	9.0		5.3			5.3	28.0
169	DL	181+00	10.0	6.0	9.0		6.7			6.7	32.0
170	PL	177+00	400.0	12.0	9.0				533.3	533.3	824.0
171	DL	179+00	77.0	12.0	9.0				102.7	102.7	178.0
172	DL	178+02	6.0	6.0	9.0	4.0				4.0	24.0
173	DL	177+47	65.0	12.0	9.0				86.7	86.7	154.0
174	DL	176+14	114.0	6.0	9.0				76.0	76.0	240.0
175	DL	572+45	8.0	6.0	9.0		5.3			5.3	28.0
176	PL	571+00	10.0	6.0	9.0		6.7			6.7	32.0
177	DL	565+65	10.0	6.0	9.0		6.7			6.7	32.0
178	DL	565+54	6.0	6.0	9.0	4.0				4.0	24.0
179	DL	563+75	6.0	6.0	9.0	4.0				4.0	24.0
180	DL	562+93	6.0	6.0	9.0	4.0				4.0	24.0
181	DL	562+40	6.0	6.0	9.0	4.0				4.0	24.0
182	PL	558+12	6.0	6.0	9.0	4.0				4.0	24.0
183	DL	557+29	6.0	6.0	9.0	4.0				4.0	24.0
184	DL	556+60	6.0	6.0	9.0	4.0				4.0	24.0
185	DL	549+33	10.0	6.0	9.0		6.7			6.7	32.0
186	DL	548+82	6.0	6.0	9.0	4.0				4.0	24.0
187	DL	545+78	6.0	6.0	9.0	4.0				4.0	24.0
188	DL	545+38	8.0	6.0	9.0		5.3			5.3	28.0
189	DL	545+00	6.0	6.0	9.0	4.0				4.0	24.0
190	PL	541+25	6.0	6.0	9.0	4.0				4.0	24.0
191	DL	539+53	6.0	6.0	9.0	4.0				4.0	24.0
192	DL	535+29	6.0	6.0	9.0	4.0				4.0	24.0
193	DL	534+56	6.0	6.0	9.0	4.0				4.0	24.0
194	DL	534+15	9.0	6.0	9.0		6.0			6.0	30.0
195	DL	527+69	6.0	6.0	9.0	4.0				4.0	24.0
196	DL	525+04	6.0	6.0	9.0	4.0				4.0	24.0
197	PL	523+55	6.0	12.0	9.0		8.0			8.0	36.0
198	PL	523+45	6.0	12.0	9.0		8.0			8.0	36.0

PATCH NUMBER	LANE	STATION	LENGTH (FOOT)	WIDTH (FOOT)	DEPTH (INCH)	CLASS A PATCHES, TYPE 1, 9" (SPECIAL) (SQ YD)	CLASS A PATCHES, TYPE 2, 9" (SPECIAL) (SQ YD)	CLASS A PATCHES, TYPE 3, 9" (SPECIAL) (SQ YD)	CLASS A PATCHES, TYPE 4, 9" (SPECIAL) (SQ YD)	PATCHING REINFORCEMENT (SQ YD)	SAW CUTS (FOOT)
US 51 SOUTHBOUND											
199	PL	522+93	12.0	6.0	9.0		8.0			8.0	36.0
200	DL	518+11	6.0	6.0	9.0	4.0				4.0	24.0
201	PL	517+77	22.0	6.0	9.0		14.7			14.7	56.0
202	DL	515+48	6.0	6.0	9.0	4.0				4.0	24.0
203	DL	509+93	6.0	6.0	9.0	4.0				4.0	24.0
204	DL	503+71	6.0	12.0	9.0		8.0			8.0	36.0
205	DL	500+00	6.0	6.0	9.0	4.0				4.0	24.0
206	DL	492+17	10.0	6.0	9.0		6.7			6.7	32.0
207	DL	491+34	6.0	6.0	9.0	4.0				4.0	24.0
208	DL	490+81	11.0	12.0	9.0		14.7			14.7	46.0
209	DL	490+49	6.0	12.0	9.0		8.0			8.0	36.0
210	DL	484+12	6.0	6.0	9.0	4.0				4.0	24.0
211	DL	482+71	6.0	6.0	9.0	4.0				4.0	24.0
212	DL	481+63	6.0	6.0	9.0	4.0				4.0	24.0
213	DL	481+51	10.0	6.0	9.0		6.7			6.7	32.0
214	DL	474+66	6.0	12.0	9.0		8.0			8.0	36.0
215	DL	472+14	6.0	12.0	9.0		8.0			8.0	36.0
216	DL	470+29	6.0	12.0	9.0		8.0			8.0	36.0
217	DL	466+51	6.0	6.0	9.0	4.0				4.0	24.0
218	DL	465+24	16.0	6.0	9.0		10.7			10.7	44.0
219	DL	464+66	6.0	6.0	9.0	4.0				4.0	24.0
220	DL	464+51	6.0	6.0	9.0	4.0				4.0	24.0
221	DL	464+10	15.0	6.0	9.0		10.0			10.0	42.0
222	DL	463+83	6.0	12.0	9.0		8.0			8.0	36.0
223	DL	459+91	6.0	6.0	9.0	4.0				4.0	24.0
224	DL	459+32	6.0	6.0	9.0	4.0				4.0	24.0
225	DL	449+90	6.0	6.0	9.0	4.0				4.0	24.0
226	DL	449+84	6.0	6.0	9.0	4.0				4.0	24.0
227	DL	447+90	6.0	6.0	9.0	4.0				4.0	24.0
228	DL	444+09	6.0	6.0	9.0	4.0				4.0	24.0
229	DL	443+89	6.0	12.0	9.0		8.0			8.0	36.0
230	DL	437+21	6.0	6.0	9.0	4.0				4.0	24.0
231	DL	436+28	6.0	6.0	9.0	4.0				4.0	24.0
232	DL	436+22	6.0	6.0	9.0	4.0				4.0	24.0
233	DL	435+95	6.0	6.0	9.0	4.0				4.0	24.0
234	DL	435+80	6.0	6.0	9.0	4.0				4.0	24.0
235	DL	435+74	6.0	6.0	9.0	4.0				4.0	24.0
236	DL	435+41	6.0	6.0	9.0	4.0				4.0	24.0
237	DL	435+09	6.0	6.0	9.0	4.0				4.0	24.0
238	DL	435+03	6.0	6.0	9.0	4.0				4.0	24.0
239	DL	434+05	10.0	6.0	9.0		6.7			6.7	32.0
240	DL	433+48	6.0	12.0	9.0		8.0			8.0	36.0
241	DL	432+96	6.0	6.0	9.0	4.0				4.0	24.0
242	DL	432+88	6.0	6.0	9.0	4.0				4.0	24.0
243	DL	432+36	6.0	6.0	9.0	4.0				4.0	24.0
244	PL	431+75	6.0	12.0	9.0		8.0			8.0	36.0
245	DL	431+53	6.0	6.0	9.0	4.0				4.0	24.0
246	DL	426+40	6.0	12.0	9.0		8.0			8.0	36.0
247	PL	426+30	6.0	12.0	9.0		8.0			8.0	36.0
248	DL	425+98	6.0	12.0	9.0		8.0			8.0	36.0
249	DL	422+68	6.0	12.0	9.0		8.0			8.0	36.0
250	PL	422+68	6.0	12.0	9.0		8.0			8.0	36.0
251	DL	422+28	6.0	6.0	9.0	4.0				4.0	24.0
252	DL	417+54	6.0	12.0	9.0		8.0			8.0	36.0
253	DL	417+07	22.0	6.0	9.0		14.7			14.7	56.0
254	PL	416+47	6.0	6.0	9.0	4.0				4.0	24.0
255	DL	416+03	23.0	6.0	9.0			15.3		15.3	58.0
256	PL	416+03	15.0	6.0	9.0		10.0			10.0	42.0
257	DL	415+57	25.0	6.0	9.0			16.7		16.7	62.0
258	DL	412+17	6.0	6.0	9.0	4.0				4.0	24.0
259	DL	411+80	6.0	6.0	9.0	4.0				4.0	24.0
260	DL	411+65	9.0	6.0	9.0		6.0			6.0	30.0
261	DL	411+53	6.0	6.0	9.0	4.0				4.0	24.0
262	DL	411+36	6.0	12.0	9.0		8.0			8.0	36.0
263	DL	411+28	15.0	6.0	9.0		10.0			10.0	42.0
264	DL	411+08	6.0	6.0	9.0	4.0				4.0	24.0
265	DL	410+01	8.0	6.0	9.0		5.3			5.3	28.0
266	DL	409+34	6.0	6.0	9.0	4.0				4.0	24.0

PATCH NUMBER	LANE	STATION	LENGTH (FOOT)	WIDTH (FOOT)	DEPTH (INCH)	CLASS A PATCHES, TYPE 1, 9" (SPECIAL) (SQ YD)	CLASS A PATCHES, TYPE 2, 9" (SPECIAL) (SQ YD)	CLASS A PATCHES, TYPE 3, 9" (SPECIAL) (SQ YD)	CLASS A PATCHES, TYPE 4, 9" (SPECIAL) (SQ YD)	PATCHING REINFORCEMENT (SQ YD)	SAW CUTS (FOOT)
US 51 SOUTHBOUND											
267	DL	409+21	6.0	6.0	9.0	4.0				4.0	24.0
268	DL	409+11	6.0	6.0	9.0	4.0				4.0	24.0
269	DL	408+38	13.0	12.0	9.0			17.3		17.3	50.0
270	DL	408+25	8.0	6.0	9.0		5.3			5.3	28.0
271	DL	408+17	11.0	6.0	9.0		7.3			7.3	34.0
272	DL	408+01	12.0	6.0	9.0		8.0			8.0	36.0
273	DL	407+83	9.0	12.0	9.0		12.0			12.0	42.0
274	DL	407+32	6.0	6.0	9.0	4.0				4.0	24.0
275	DL	406+33	6.0	6.0	9.0	4.0				4.0	24.0
276	DL	406+24	6.0	6.0	9.0	4.0				4.0	24.0
277	DL	404+08	6.0	6.0	9.0	4.0				4.0	24.0
278	DL	403+77	6.0	6.0	9.0	4.0				4.0	24.0
279	DL	403+32	6.0	6.0	9.0	4.0				4.0	24.0
280	DL	403+18	6.0	12.0	9.0		8.0			8.0	36.0
281	DL	402+85	6.0	6.0	9.0	4.0				4.0	24.0
282	DL	402+75	6.0	6.0	9.0	4.0				4.0	24.0
283	DL	401+86	8.0	6.0	9.0		5.3			5.3	28.0
284	DL	401+34	6.0	6.0	9.0	4.0				4.0	24.0
285	DL	401+25	6.0	6.0	9.0	4.0				4.0	24.0
286	DL	400+58	6.0	6.0	9.0	4.0				4.0	24.0
287	DL	400+36	6.0	6.0	9.0	4.0				4.0	24.0
288	DL	400+29	10.0	6.0	9.0		6.7			6.7	32.0
289	DL	398+07	6.0	6.0	9.0	4.0				4.0	24.0
290	DL	397+84	6.0	6.0	9.0	4.0				4.0	24.0
291	DL	396+75	6.0	6.0	9.0	4.0				4.0	24.0
292	DL	396+65	6.0	6.0	9.0	4.0				4.0	24.0
293	DL	396+50	6.0	6.0	9.0	4.0				4.0	24.0
294	DL	396+24	6.0	6.0	9.0	4.0				4.0	24.0
295	DL	396+06	6.0	6.0	9.0	4.0				4.0	24.0
296	PL	394+70	8.0	6.0	9.0		5.3			5.3	28.0
297	DL	386+42	6.0	6.0	9.0	4.0				4.0	24.0
298	DL	381+76	6.0	6.0	9.0	4.0				4.0	24.0
299	DL	378+26	6.0	12.0	9.0		8.0			8.0	36.0
300	DL	374+90	6.0	6.0	9.0	4.0				4.0	24.0
301	DL	374+85	6.0	6.0	9.0	4.0				4.0	24.0
302	DL	374+78	6.0	6.0	9.0	4.0				4.0	24.0
303	DL	374+50	6.0	6.0	9.0	4.0				4.0	24.0
304	DL	374+43	12.0	12.0	9.0			16.0		16.0	48.0
305	DL	374+37	6.0	12.0	9.0		8.0			8.0	36.0
306	DL	367+50	6.0	6.0	9.0	4.0				4.0	24.0
307	DL	363+48	6.0	6.0	9.0	4.0				4.0	24.0
308	DL	363+24	6.0	6.0	9.0	4.0				4.0	24.0
309	DL	363+08	10.0	12.0	9.0		13.3			13.3	44.0
310	DL	358+13	6.0	12.0	9.0		8.0			8.0	36.0
311	PL	357+63	6.0	6.0	9.0	4.0				4.0	24.0
312	DL	357+49	6.0	6.0	9.0	4.0				4.0	24.0
313	DL	353+98	8.0	6.0	9.0		5.3			5.3	28.0
314	DL	348+05	6.0	6.0	9.0	4.0				4.0	24.0
315	PL	348+05	6.0	6.0	9.0	4.0				4.0	24.0
316	DL	347+15	6.0	6.0	9.0	4.0				4.0	24.0
317	DL	345+32	57.0	6.0	9.0				38.0	38.0	126.0
318	DL	343+67	8.0	6.0	9.0		5.3			5.3	28.0
319	DL	343+60	11.0	6.0	9.0		7.3			7.3	34.0
320	DL	343+51	8.0	6.0	9.0		5.3			5.3	28.0
321	DL	343+44	6.0	6.0	9.0	4.0				4.0	24.0
322	DL	342+62	6.0	6.0	9.0	4.0				4.0	24.0
323	DL	342+57	12.0	6.0	9.0		8.0			8.0	36.0
324	DL	342+08	6.0	6.0	9.0	4.0				4.0	24.0
325	DL	338+70	10.0	12.0	9.0		13.3			13.3	44.0
326	DL	335+86	24.0	6.0	9.0			16.0		16.0	60.0
327	DL	335+50	6.0	6.0	9.0	4.0				4.0	24.0
328	DL	335+42	6.0	6.0	9.0	4.0				4.0	24.0
329	DL	332+32	6.0	12.0	9.0		8.0			8.0	36.0
330	DL	332+05	6.0	6.0	9.0	4.0				4.0	24.0
331	DL	331+71	6.0	6.0	9.0	4.0				4.0	24.0
332	PL	330+45	45.0	6.0	9.0				30.0	30.0	102.0
333	DL	330+16	6.0	6.0	9.0	4.0				4.0	24.0
334	PL	329+85	30.0	6.0	9.0			20.0		20.0	72.0

PATCH NUMBER	LANE	STATION	LENGTH (FOOT)	WIDTH (FOOT)	DEPTH (INCH)	CLASS A PATCHES, TYPE 1, 9" (SPECIAL) (SQ YD)	CLASS A PATCHES, TYPE 2, 9" (SPECIAL) (SQ YD)	CLASS A PATCHES, TYPE 3, 9" (SPECIAL) (SQ YD)	CLASS A PATCHES, TYPE 4, 9" (SPECIAL) (SQ YD)	PATCHING REINFORCEMENT (SQ YD)	SAW CUTS (FOOT)
US 51 SOUTHBOUND											
335	DL	329+39	6.0	6.0	9.0	4.0				4.0	24.0
336	DL	328+59	6.0	6.0	9.0	4.0				4.0	24.0
337	DL	328+12	6.0	6.0	9.0	4.0				4.0	24.0
338	DL	325+93	6.0	6.0	9.0	4.0				4.0	24.0
339	DL	325+16	24.0	6.0	9.0			16.0		16.0	60.0
340	DL	324+12	6.0	6.0	9.0	4.0				4.0	24.0
341	DL	323+95	6.0	6.0	9.0	4.0				4.0	24.0
342	DL	314+59	6.0	6.0	9.0	4.0				4.0	24.0
343	DL	311+42	11.0	6.0	9.0		7.3			7.3	34.0
344	PL	311+33	8.0	6.0	9.0		5.3			5.3	28.0
345	DL	311+24	8.0	6.0	9.0		5.3			5.3	28.0
346	PL	311+07	23.0	6.0	9.0			15.3		15.3	58.0
347	DL	309+59	6.0	6.0	9.0	4.0				4.0	24.0
348	DL	304+78	6.0	6.0	9.0	4.0				4.0	24.0
349	DL	304+65	20.0	6.0	9.0		13.3			13.3	52.0
350	DL	304+25	6.0	12.0	9.0		8.0			8.0	36.0
351	PL	304+25	8.0	12.0	9.0		10.7			10.7	40.0
352	PL	304+00	6.0	6.0	9.0	4.0				4.0	24.0
353	DL	302+85	6.0	6.0	9.0	4.0				4.0	24.0
354	DL	301+19	6.0	6.0	9.0	4.0				4.0	24.0
355	DL	298+74	6.0	6.0	9.0	4.0				4.0	24.0
356	DL	296+89	6.0	6.0	9.0	4.0				4.0	24.0
357	DL	295+77	6.0	6.0	9.0	4.0				4.0	24.0
358	DL	295+71	6.0	6.0	9.0	4.0				4.0	24.0
359	DL	293+43	6.0	6.0	9.0	4.0				4.0	24.0
360	DL	291+60	6.0	6.0	9.0	4.0				4.0	24.0
361	DL	290+77	6.0	6.0	9.0	4.0				4.0	24.0
362	DL	290+65	6.0	6.0	9.0	4.0				4.0	24.0
363	DL	289+58	6.0	12.0	9.0		8.0			8.0	36.0
364	PL	289+03	8.0	6.0	9.0		5.3			5.3	28.0
365	DL	285+22	6.0	6.0	9.0	4.0				4.0	24.0
366	DL	283+72	6.0	6.0	9.0	4.0				4.0	24.0
					RURAL TOTAL =	524.0	709.1	132.6	1552.1	2917.8	9716.0
367	DL	272+32	8.0	12.0	9.0		10.7			10.7	40.0
368	DL	272+23	7.0	6.0	9.0	4.7				4.7	26.0
369	DL	271+74	8.0	6.0	9.0		5.3			5.3	28.0
370	PL	271+74	8.0	6.0	9.0		5.3			5.3	28.0
371	DL	271+53	8.0	6.0	9.0		5.3			5.3	28.0
372	DL	271+34	6.0	6.0	9.0	4.0				4.0	24.0
373	PL	271+34	6.0	6.0	9.0	4.0				4.0	24.0
374	DL	271+22	6.0	6.0	9.0	4.0				4.0	24.0
375	DL	270+99	6.0	6.0	9.0	4.0				4.0	24.0
376	DL	270+93	6.0	6.0	9.0	4.0				4.0	24.0
					URBAN TOTAL =	24.7	26.6			51.3	270.0
					SOUTHBOUND TOTAL =	548.7	735.7	132.6	1552.1	2969.1	9986.0

LOCATION	CLASS A PATCHES, TYPE 1, 9" (SPECIAL) (SQ YD)	CLASS A PATCHES, TYPE 2, 9" (SPECIAL) (SQ YD)	CLASS A PATCHES, TYPE 3, 9" (SPECIAL) (SQ YD)	CLASS A PATCHES, TYPE 4, 9' (SPECIAL) (SQ YD)	PATCHING REINFORCEMENT (SQ YD)	SAW CUTS (FOOT)
US 51 URBAN	29	35			63	330
US 51 RURAL	741	1215	281	1775	4013	14331
PROJECT TOTALS –	770	1250	281	1775	4076	14661

MODEL: Default
FILE NAME: pw:\\ildot-pw.bentley.com:PWIDOT\Documents\IDOT Offices\District 7\Projects\74800\CADData\CADsheets\0774800-sht-schedule.dgn

USER NAME = Mona.Steffen	DESIGNED -	REVISED -	
	DRAWN -	REVISED -	
PLOT SCALE = 100.0000 ' / in.	CHECKED -	REVISED -	
PLOT DATE = 4/6/2023	DATE -	REVISED -	

STATE OF ILLINOIS
DEPARTMENT OF TRANSPORTATION

SCHEDULE OF QUANTITIES

SCALE: | SHEET 3 OF 29 SHEETS | STA. TO STA.

F.A.P RTE.	SECTION	COUNTY	TOTAL SHEETS	SHEET NO.
322	50,51,52 RS-3	MACON	79	13
		CONTRACT NO. 74800		
	ILLINOIS	FED. AID PROJECT		

PATCH NUMBER	LANE	STATION	LENGTH (FOOT)	WIDTH (FOOT)	DEPTH (INCH)	CLASS D PATCHES, TYPE 2, 20" (SQ YD)
US 51 NORTHBOUND						
1	DL	444+80	6.0	12.0	20.0	8.0
2	PL	444+80	6.0	12.0	20.0	8.0
3	DL	447+12	10.0	12.0	20.0	13.3
4	DL	449+00	8.0	12.0	20.0	10.7
5	DL	449+61	6.0	12.0	20.0	8.0
6	DL	451+72	10.0	12.0	20.0	13.3
7	DL	453+80	6.0	12.0	20.0	8.0
8	PL	453+80	6.0	12.0	20.0	8.0
9	DL	456+74	14.0	6.0	20.0	9.3
10	DL	495+91	6.0	12.0	20.0	8.0
11	DL	497+66	6.0	12.0	20.0	8.0
12	DL	497+76	6.0	12.0	20.0	8.0
13	DL	499+53	6.0	12.0	20.0	8.0
14	DL	501+03	8.0	12.0	20.0	10.7
15	DL	501+12	6.0	12.0	20.0	8.0
16	DL	506+75	8.0	12.0	20.0	10.7
17	PL	506+80	6.0	12.0	20.0	8.0
18	DL	513+62	6.0	12.0	20.0	8.0
19	DL	513+87	6.0	12.0	20.0	8.0
20	DL	517+98	6.0	12.0	20.0	8.0
21	PL	517+98	6.0	12.0	20.0	8.0
22	DL	520+10	6.0	12.0	20.0	8.0
23	DL	520+22	6.0	12.0	20.0	8.0
24	DL	525+36	6.0	12.0	20.0	8.0
					PROJECT TOTAL =	212

APPROACH SLAB REPAIR						
LOCATION	CL OFFSET (FOOT)	DEPTH	LENGTH (FOOT)	WIDTH (FOOT)	APPROACH SLAB REPAIR (FULL DEPTH) (SQ YD)	APPROACH SLAB REPAIR (PARTIAL DEPTH) (SQ YD)
NORTHBOUND US 51						
SN 058-0114						
SOUTH APPROACH						
423+70	10' RT	PARTIAL	3.00	4.00		1.33
424+20	10' RT	FULL	8.00	4.00	3.56	
424+46	8' RT	PARTIAL	2.00	4.00		0.89
424+50	10' LT	PARTIAL	2.00	4.00		0.89
424+50	2' LT	PARTIAL	2.00	4.00		0.89
NORTH APPROACH						
425+51	6' LT	PARTIAL	2.00	12.00		2.67
425+56	3' RT	PARTIAL	2.00	6.00		1.33
425+60	1' RT	PARTIAL	2.00	2.00		0.44
425+74	10' LT	FULL	3.00	4.00	1.33	
425+89	2' LT	FULL	5.00	5.00	2.78	
426+04	11' LT	PARTIAL	6.00	2.00		1.33
SOUTHBOUND US 51						
SN 058-0113						
SOUTH APPROACH						
423+85.00	8' LT	FULL	2.00	5.00	1.11	
423+89.00	3' LT	FULL	2.00	6.00	1.33	
NORTH APPROACH						
424+92.00	10' LT	PARTIAL	4.00	3.00		1.33
424+94.00	3' LT	FULL	3.00	6.00	2.00	
				PROJECT TOTAL =	12	11

REMOVAL ITEMS			
LOCATION	ISLAND REMOVAL (SQ FT)	CORRUGATE MEDIAN REMOVAL (SQ FT)	COMBINATION CURG AND GUTTER REMOVAL (FOOT)
NORTHBOUND US 51			
SPACEMARK ROAD	159	-	-
WOOD STREET	198	-	-
WASHINGTON STREET	169	82.5	74
SOUTHBOUND US 51			
WASHINGTON STREET	169	78.5	-
RURAL =	695	161	74
PROJECT TOTAL =	695	161	74

CONCRETE ITEMS						
LOCATION	CLASS C PATCHES, TYPE 3, 9 INCH (SQ YD)	CONCRETE MEDIAN, TYPE SB (DOWELLED) (SQ FT)	CURB REFLECTORS (EACH)	CORRUGATED MEDIAN (SQ FT)	COMBINATION CURB AND GUTTER, TYPE B-6.24 (FOOT)	*** TIE BARS 3/4" (EACH)
NORTHBOUND US 51						
SPACEMARK ROAD	17.67	108.00	10.00	-	-	26.00
WOOD STREET	22.00	110.00	10.00	-	-	32.00
WASHINGTON STREET	18.78	107.00	10.00	82.50	74.00	109.00
SOUTHBOUND US 51						
WASHINGTON STREET	18.78	107.00	10.00	78.50	-	70.00
RURAL =	77	432	40	161	74	237
PROJECT TOTAL =	77	432	40	161	74	237

***TIE BARS ARE FOR CLASS C PATCH, CORRUGATED MEDIAN & CC&G

SHOULDER INLETS		
LOCATION	PLUG EXISTING PIPE (CU YD)	FILLING INLETS, SPECIAL (EACH)
NORTHBOUND US 51		
SN 058-0114		
SW QUADRANT	-	1
SE QUADRANT	0.20	1
SN 058-0118		
NW QUADRANT	-	1
NE QUADRANT	0.52	1
SOUTHBOUND US 51		
SN 058-0113		
SW QUADRANT	0.20	1
SE QUADRANT	-	1
SN 058-0117		
NW QUADRANT	0.58	1
NE QUADRANT	-	1
PROJECT TOTAL =	2	8

HOT-MIX ASPHALT-NORTHBOUND US 51 MAINLINE

STATIONING FROM	STATIONING TO	LENGTH (FOOT)	WIDTH (FOOT)	AREA (SQ FT)	AREA (SQ YD)	POLYMERIZED HOT-MIX ASPHALT BINDER BINDER COURSE THICKNESS (INCH)	POLYMERIZED HOT-MIX ASPHALT SURFACE COURSE THICKNESS (INCH)	HOT-MIX ASPHALT SURFACE REMOVAL, 1 1/2" (SQ YD)	PORTLAND CEMENT CONCRETE SURFACE REMOVAL-BUTT JOINT (SQ YD)	BITUMINOUS MATERIALS (TACK COAT) (POUND)	POLYMERIZED HOT-MIX ASPHALT BINDER COURSE, IL-9.5FG, N90 (TON)	POLYMERIZED HOT-MIX ASPHALT SURFACE COURSE, IL-9.5, MIX "D", N90 (TON)
NORTHBOUND US 51												
265+10.00	265+40.00	30.0	24.0	720.00	80.00	-	1.50		133.33	36.00		6.72
265+40.00	265+70.00	30.0	24.0	720.00	80.00	-	2.25			36.00		10.08
265+70.00	265+85.00	15.0	24.0	360.00	40.00	1.375	2.00			27.00	3.08	4.48
265+85.00	273+82.08	797.1	24.0	19129.92	2125.55	1.75	2.00			1434.74	208.30	238.06
STA EQU: 273+82.08 BK= 273+79.78 AH												
273+79.78	275+20.00	140.2	24.0	3365.28	373.92	1.75	2.00			252.40	36.64	41.88
275+20.00	276+35.00	115.0	24.0	2760.00	306.67	1.75	2.00			207.00	30.05	34.35
276+35.00	277+50.65	115.7	24.0	2775.60	308.40	1.75	2.00			208.17	30.22	34.54
URBAN							TOTAL =	0	133	2201	308	370
277+50.65	278+44.00	93.3	24.0	2240.40	248.93	1.75	2.00			168.03	24.40	27.88
278+44.00	278+68.00	24.0	24.0	576.00	64.00	1.75	2.00			43.20	6.27	7.17
278+68.00	278+95.00	27.0	24.0	648.00	72.00	1.75	2.00			48.60	7.06	8.06
278+95.00	300+15.00	2120.0	24.0	50880.00	5653.33	1.75	2.00			3816.00	554.03	633.17
300+15.00	302+45.00	230.0	24.0-36.0	6900.00	766.67	1.75	2.00			517.50	75.13	85.87
302+45.00	304+40.00	195.0	36.0	7020.00	780.00	1.75	2.00			526.50	76.44	87.36
304+40.00	304+77.00	37.0	36.0-48.0	1554.00	172.67	1.75	2.00			116.55	16.92	19.34
304+77.00	305+44.00	67.0	48.0	3216.00	357.33	1.75	2.00			241.20	35.02	40.02
305+44.00	305+90.00	46.0	48.0-24.0	1656.00	184.00	1.75	2.00			124.20	18.03	20.61
305+90.00	324+88.00	1898.0	24.0	45552.00	5061.33	1.75	2.00			3416.40	496.01	566.87
324+88.00	328+13.00	325.0	24.0-36.0	9750.00	1083.33	1.75	2.00			731.25	106.17	121.33
328+13.00	328+24.00	11.0	36.0	396.00	44.00	1.75	2.00			29.70	4.31	4.93
328+24.00	329+40.00	116.0	36.0	4176.00	464.00	1.75	2.00			313.20	45.47	51.97
329+40.00	331+30.00	190.0	36.0	6840.00	760.00	1.75	2.00			513.00	74.48	85.12
331+30.00	331+83.00	53.0	24.0	1272.00	141.33	1.75	2.00			95.40	13.85	15.83
331+83.00	332+88.00	105.0	42.0	4410.00	490.00	1.75	2.00			330.75	48.02	54.88
332+88.00	333+52.00	64.0	42.0-24.0	2112.00	234.67	1.75	2.00			158.40	23.00	26.28
333+52.00	353+60.00	2008.0	24.0	48192.00	5354.67	1.75	2.00			3614.40	524.76	599.72
353+60.00	353+68.00	8.0	26.0	208.00	23.11	1.75	2.00			15.60	2.26	2.59
353+68.00	355+90.00	222.0	26.0-48.0	8214.00	912.67	1.75	2.00			616.05	89.44	102.22
355+90.00	355+98.00	8.0	48.0	384.00	42.67	1.75	2.00			28.80	4.18	4.78
355+98.00	357+93.80	195.8	48.0	9398.40	1044.27	1.75	2.00			704.88	102.34	116.96
STA EQU: 357+93.80 BK= 357+91.02 AH												
357+91.02	358+21.00	30.0	48.0	1439.04	159.89	1.75	2.00			107.93	15.67	17.91
358+21.00	358+89.00	68.0	48.0	3264.00	362.67	1.75	2.00			244.80	35.54	40.62
358+89.00	359+45.00	56.0	48.0-24.0	2016.00	224.00	1.75	2.00			151.20	21.95	25.09
359+45.00	381+84.00	2239.0	24.0	53736.00	5970.67	1.75	2.00			4030.20	585.13	668.71
381+84.00	382+99.00	115.0	24.0	2760.00	306.67	1.75	2.00			207.00	30.05	34.35
382+99.00	385+07.00	208.0	24.0	4992.00	554.67	1.75	2.00			374.40	54.36	62.12
385+07.00	385+32.00	25.0	24.0	600.00	66.67	1.75	2.00			45.00	6.53	7.47
385+32.00	385+58.00	26.0	24.0	624.00	69.33	1.75	2.00			46.80	6.79	7.77
385+58.00	406+81.00	2123.0	24.0	50952.00	5661.33	1.75	2.00			3821.40	554.81	634.07
406+81.00	406+83.00	2.0	24.0	48.00	5.33	1.75	2.00			3.60	0.52	0.60
406+83.00	409+11.00	228.0	24.0-48.0	8208.00	912.00	1.75	2.00			615.60	89.38	102.14
409+11.00	409+33.00	22.0	48.0	1056.00	117.33	1.75	2.00			79.20	11.50	13.14
409+33.00	411+50.00	217.0	48.0	10416.00	1157.33	1.75	2.00			781.20	113.42	129.62
411+50.00	412+16.00	66.0	48.0	3168.00	352.00	1.75	2.00			237.60	34.50	39.42
412+16.00	412+66.00	50.0	48.0-24.0	1800.00	200.00	1.75	2.00			135.00	19.60	22.40
412+66.00	423+75.07	1109.1	24.0	26617.68	2957.52	1.75	2.00			1996.33	289.84	331.24
423+75.07	423+90.07	15.0	24.0	360.00	40.00	1.375	2.00			27.00	3.08	4.48
423+90.07	424+20.07	30.0	24.0	720.00	80.00	-	2.25			36.00		10.08
424+20.07	424+50.07	30.0	24.0	720.00	80.00	-	1.50		133.33	36.00		6.72
424+50.07	425+54.32	104.3	-	-	-	-	-					
425+54.32	425+84.32	30.0	24.0	720.00	80.00	-	1.50		133.33	36.00		6.72
425+84.32	426+14.32	30.0	24.0	720.00	80.00	-	2.25			36.00		10.08
426+14.32	426+29.32	15.0	24.0	360.00	40.00	1.375	2.00			27.00	3.08	4.48
426+29.32	434+02.00	772.7	24.0	18544.32	2060.48	1.75	2.00			1390.82	201.93	230.77
434+02.00	434+32.00	30.0	24.0	720.00	80.00	2.50	2.00	80.00		54.00	11.20	8.96
434+32.00	435+10.00	78.0	24.0	1872.00	208.00	1.75	2.00	208.00		140.40	20.38	23.30
435+10.00	436+25.00	115.0	24.0	2760.00	306.67	1.75	2.00	306.67		207.00	30.05	34.35
436+25.00	438+33.00	208.0	24.0	4992.00	554.67	1.75	2.00	554.67		374.40	54.36	62.12
438+33.00	438+58.00	25.0	24.0	600.00	66.67	1.75	2.00	66.67		45.00	6.53	7.47
438+58.00	438+72.00	14.0	24.0	336.00	37.33	1.75	2.00	37.33		25.20	3.66	4.18
438+72.00	460+24.00	2152.0	24.0	51648.00	5738.67	1.75	2.00	5738.67		3873.60	562.39	642.73
460+24.00	460+34.00	10.0	26.0	260.00	28.89	1.75	2.00	28.89		19.50	2.83	3.24
460+34.00	462+54.00	220.0	26.0-48.0	8140.00	904.44	1.75	2.00	904.44		610.50	88.64	101.30
462+54.00	462+64.00	10.0	48.0	480.00	53.33	1.75	2.00	53.33		36.00	5.23	5.97
462+64.00	464+49.00	185.0	48.0	8880.00	986.67	1.75	2.00	986.67		666.00	96.69	110.51

HOT-MIX ASPHALT-NORTHBOUND US 51 MAINLINE												
STATIONING FROM	STATIONING TO	LENGTH (FOOT)	WIDTH (FOOT)	AREA (SQ FT)	AREA (SQ YD)	POLYMERIZED HOT-MIX ASPHALT BINDER BINDER COURSE THICKNESS (INCH)	POLYMERIZED HOT-MIX ASPHALT SURFACE COURSE THICKNESS (INCH)	HOT-MIX ASPHALT SURFACE REMOVAL, 1 1/2" (SQ YD)	PORTLAND CEMENT CONCRETE SURFACE REMOVAL-BUTT JOINT (SQ YD)	BITUMINOUS MATERIALS (TACK COAT) (POUND)	POLYMERIZED HOT-MIX ASPHALT BINDER COURSE, IL-9.5FG, N90 (TON)	POLYMERIZED HOT-MIX ASPHALT SURFACE COURSE, IL-9.5, MIX "D", N90 (TON)
NORTHBOUND US 51												
464+49.00	464+86.00	37.0	48.0-60.0	1998.00	222.00	1.75	2.00	222.00		149.85	21.76	24.86
464+86.00	465+52.00	66.0	60.0	3960.00	440.00	1.75	2.00	440.00		297.00	43.12	49.28
465+52.00	466+07.00	55.0	48.0-24.0	1980.00	220.00	1.75	2.00	220.00		148.50	21.56	24.64
466+07.00	488+46.00	2239.0	24.0	53736.00	5970.67	1.75	2.00	5970.67		4030.20	585.13	668.71
488+46.00	489+61.00	115.0	24.0	2760.00	306.67	1.75	2.00	306.67		207.00	30.05	34.35
489+61.00	491+69.00	208.0	24.0	4992.00	554.67	1.75	2.00	554.67		374.40	54.36	62.12
491+69.00	491+94.00	25.0	24.0	600.00	66.67	1.75	2.00	66.67		45.00	6.53	7.47
491+94.00	492+08.00	14.0	24.0	336.00	37.33	1.75	2.00	37.33		25.20	3.66	4.18
492+08.00	513+55.00	2147.0	24.0	51528.00	5725.33	1.75	2.00	5725.33		3864.60	561.08	641.24
513+55.00	513+63.00	8.0	26.0	208.00	23.11	1.75	2.00	23.11		15.60	2.26	2.59
513+63.00	515+85.00	222.0	48.0-26.0	8214.00	912.67	1.75	2.00	912.67		616.05	89.44	102.22
515+85.00	515+93.00	8.0	48.0	384.00	42.67	1.75	2.00	42.67		28.80	4.18	4.78
515+93.00	517+80.00	187.0	48.0	8976.00	997.33	1.75	2.00	997.33		673.20	97.74	111.70
517+80.00	518+17.00	37.0	48.0-60.0	1998.00	222.00	1.75	2.00	222.00		149.85	21.76	24.86
518+17.00	518+83.00	66.0	60.0	3960.00	440.00	1.75	2.00	440.00		297.00	43.12	49.28
518+83.00	519+22.00	39.0	48.0-24.0	1404.00	156.00	1.75	2.00	156.00		105.30	15.29	17.47
519+22.00	537+86.00	1864.0	24.0	44736.00	4970.67	1.75	2.00	4970.67		3355.20	487.13	556.71
537+86.00	539+01.00	115.0	24.0	2760.00	306.67	1.75	2.00	306.67		207.00	30.05	34.35
539+01.00	541+15.00	214.0	24.0	5136.00	570.67	1.75	2.00	570.67		385.20	55.93	63.91
541+15.00	541+39.00	24.0	24.0	576.00	64.00	1.75	2.00	64.00		43.20	6.27	7.17
541+39.00	541+68.00	29.0	24.0	696.00	77.33	1.75	2.00	77.33		52.20	7.58	8.66
541+68.00	566+89.00	2521.0	24.0	60504.00	6722.67	1.75	2.00	6722.67		4537.80	658.82	752.94
566+89.00	566+97.00	8.0	26.0	208.00	23.11	1.75	2.00	23.11		15.60	2.26	2.59
566+97.00	569+19.00	222.0	26.0-48.0	8214.00	912.67	1.75	2.00	912.67		616.05	89.44	102.22
569+19.00	569+27.00	8.0	48.0	384.00	42.67	1.75	2.00	42.67		28.80	4.18	4.78
569+27.00	571+14.00	187.0	48.0	8976.00	997.33	1.75	2.00	997.33		673.20	97.74	111.70
571+14.00	571+52.00	38.0	48.0-60.0	2052.00	228.00	1.75	2.00	228.00		153.90	22.34	25.54
571+52.00	572+18.00	66.0	60.0	3960.00	440.00	1.75	2.00	440.00		297.00	43.12	49.28
572+18.00	572+24.00	6.0	48.0-40.0	264.00	29.33	1.75	2.00	29.33		19.80	2.87	3.29
572+24.00	572+54.00	30.0	40.0-24.0	960.00	106.67	2.50	2.00	106.67		72.00	14.93	11.95
572+54.00	574+01.69	147.7	24.0	3544.56	393.84	1.75	2.00			265.84	38.60	44.11
STA EQU: 574+01.69 BK=174+89.59 AH												
174+89.59	187+58.00	1268.4	24.0	30441.84	3382.43	1.75	2.00			2283.14	331.48	378.83
187+58.00	189+54.00	196.0	24.0-34.0	5684.00	631.56	1.75	2.00			426.30	61.89	70.73
189+54.00	190+53.00	99.0	34.0-36.0	3465.00	385.00	1.75	2.00			259.88	37.73	43.12
190+53.00	191+83.00	130.0	36.0	4680.00	520.00	1.75	2.00			351.00	50.96	58.24
191+83.00	193+61.00	178.0	36.0	6408.00	712.00	1.75	2.00			480.60	69.78	79.74
193+61.00	193+77.00	16.0	24.0	384.00	42.67	1.75	2.00			28.80	4.18	4.78
193+77.00	194+16.00	39.0	36.0-48.0	1638.00	182.00	1.75	2.00			122.85	17.84	20.38
194+16.00	194+81.00	65.0	48.0	3120.00	346.67	1.75	2.00			234.00	33.97	38.83
194+81.00	195+40.00	59.0	48.0-24.0	2124.00	236.00	1.75	2.00			159.30	23.13	26.43
195+40.00	215+35.00	1995.0	24.0	47880.00	5320.00	1.75	2.00			3591.00	521.36	595.84
215+35.00	217+67.00	232.0	24.0	5568.00	618.67	1.75	2.00			417.60	60.63	69.29
217+67.00	219+75.00	208.0	24.0	4992.00	554.67	1.75	2.00			374.40	54.36	62.12
219+75.00	219+99.00	24.0	24.0	576.00	64.00	1.75	2.00			43.20	6.27	7.17
219+99.00	220+36.00	37.0	24.0	888.00	98.67	1.75	2.00			66.60	9.67	11.05
220+36.00	226+02.00	566.0	24.0	13584.00	1509.33	1.75	2.00			1018.80	147.91	169.05
226+02.00	226+63.00	61.0	26.0	1586.00	176.22	1.75	2.00			118.95	17.27	19.74
226+63.00	229+02.00	239.0	26.0-48.0	8843.00	982.56	1.75	2.00			663.23	96.29	110.05
229+02.00	229+63.00	61.0	48.0	2928.00	325.33	1.75	2.00			219.60	31.88	36.44
229+63.00	232+19.00	256.0	48.0	12288.00	1365.33	1.75	2.00			921.60	133.80	152.92
232+19.00	233+00.00	81.0	36.0-48.0	3402.00	378.00	1.75	2.00			255.15	37.04	42.34
233+00.00	233+58.00	58.0	48.0	2784.00	309.33	1.75	2.00			208.80	30.31	34.65
233+58.00	234+10.00	52.0	48.0-24.0	1872.00	208.00	1.75	2.00			140.40	20.38	23.30
234+10.00	249+64.00	1554.0	24.0	37296.00	4144.00	1.75	2.00			2797.20	406.11	464.13
249+64.00	251+94.00	230.0	24.0	5520.00	613.33	1.75	2.00			414.00	60.11	68.69
251+94.00	254+01.00	207.0	24.0	4968.00	552.00	1.75	2.00			372.60	54.10	61.82
254+01.00	254+26.00	25.0	24.0	600.00	66.67	1.75	2.00			45.00	6.53	7.47
254+26.00	254+62.00	36.0	24.0	864.00	96.00	1.75	2.00			64.80	9.41	10.75
254+62.00	261+35.18	673.2	24.0	16156.32	1795.15	1.75	2.00			1211.72	175.92	201.06
261+35.18	261+50.18	15.0	24.0	360.00	40.00	1.375	2.00			27.00	3.08	4.48
261+50.18	261+80.18	30.0	24.0	720.00	80.00	-	2.25			36.00		10.08
261+80.18	262+10.18	30.0	24.0	720.00	80.00	-	1.50		133.33	36.00		6.72
262+10.18	263+01.35	91.2	-	-	-	-	-					
263+01.35	263+31.35	30.0	24.0	720.00	80.00	-	1.50		133.33	36.00		6.72
263+31.35	263+61.35	30.0	24.0	720.00	80.00	-	2.25			36.00		10.08
263+61.35	263+76.35	15.0	24.0	360.00	40.00	1.375	2.00			27.00	3.08	4.48

HOT-MIX ASPHALT-NORTHBOUND US 51 MAINLINE												
STATIONING		LENGTH	WIDTH	AREA	AREA	POLYMERIZED HOT-MIX ASPHALT BINDER BINDER COURSE THICKNESS	POLYMERIZED HOT-MIX ASPHALT SURFACE COURSE THICKNESS	HOT-MIX ASPHALT SURFACE REMOVAL, 1 1/2"	PORTLAND CEMENT CONCRETE SURFACE REMOVAL-BUTT JOINT	BITUMINOUS MATERIALS (TACK COAT)	POLYMERIZED HOT-MIX ASPHALT BINDER COURSE, IL-9.5FG, N90	POLYMERIZED HOT-MIX ASPHALT SURFACE COURSE, IL-9.5, MIX "D", N90
FROM	TO	(FOOT)	(FOOT)	(SQ FT)	(SQ YD)	(INCH)	(INCH)	(SQ YD)	(SQ YD)	(POUND)	(TON)	(TON)
NORTHBOUND US 51												
263+76.35	282+00.00	1823.7	24.0	43767.60	4863.07	1.75	2.00			3282.57	476.58	544.66
282+00.00	282+17.00	17.0	26.0	442.00	49.11	1.75	2.00			33.15	4.81	5.50
282+17.00	284+30.00	213.0	26.0-48.0	7881.00	875.67	1.75	2.00			591.08	85.82	98.07
284+30.00	284+47.00	17.0	48.0	816.00	90.67	1.75	2.00			61.20	8.89	10.15
284+47.00	286+49.00	202.0	48.0	9696.00	1077.33	1.75	2.00			727.20	105.58	120.66
286+49.00	286+68.00	19.0	48.0	912.00	101.33	1.75	2.00			68.40	9.93	11.35
286+68.00	287+32.00	64.0	48.0	3072.00	341.33	1.75	2.00			230.40	33.45	38.23
287+32.00	287+76.00	44.0	48.0-24.0	1584.00	176.00	1.75	2.00			118.80	17.25	19.71
287+76.00	287+91.00	15.0	24.0	360.00	40.00	1.375	2.00			27.00	3.08	4.48
287+91.00	288+21.00	30.0	24.0	720.00	80.00	-	2.25			36.00		10.08
288+21.00	288+51.00	30.0	24.0	720.00	80.00	-	1.50		133.33	36.00		6.72
RURAL							TOTAL =	40794	667	81138	11731	13487

SURVEY MARKERS							
POINT	STATION	OFFSET	NORTHING	EASTING	DESCRIPTION	SURVEY MARKER VAULT (EACH)	PROTECTING OR RESETTING SURVEY MARKERS (EACH)
520	278+58	1' WEST OF CL SBL 51	1193487.486	809768.905	VAULT WITH ALUMINUM DISK	1	1
521	305+10	2' EAST OF CL SBL 51	1196138.546	809771.339	VAULT WITH ALUMINUM DISK	1	1
522	305+12	CL US 51 IN CONC CROSSOVER	1196143.835	809805.361	VAULT WITH IP	1	1
513	358+50	2' RT ON NBL	1201483.412	809712.647	VAULT WITH ALUMINUM DISK	1	1
512	358+50	50' RT OF CL NBL	1201484.935	809760.155	VAULT WITH ALUMINUM DISK	-	1
514	385+21	35' RT (0' O/S NBL)	1204149.713	809723.697	VAULT WITH IP	1	1
500	411+82	35' RT (1' WEST CL NBL)	1206810.169	809729.983	VAULT WITH ALUMINUM DISK	1	1
501	438+54	36' RT (0' O/S NBL)	1209475.047	809742.660	VAULT WITH IP & CAP	1	1
502	465+15	36' RT (0' O/S NBL)	1212143.881	809753.958	VAULT WITH IP & CAP	1	1
503	491+78	36' RT (0' O/S NBL)	1214810.054	809765.418	VAULT WITH IP & CAP	1	1
504	518+40	36' RT (0' O/S NBL)	1217476.189	809776.342	VAULT WITH IP & CAP	1	1
505	571+75	36' RT (0' O/S NBL)	1222808.033	809799.549	VAULT WITH IP & CAP	1	1
					PROJECT TOTAL =	11	12

HOT-MIX ASPHALT-SOUTHBOUND US 51 MAINLINE

STATIONING FROM	STATIONING TO	LENGTH (FOOT)	WIDTH (FOOT)	AREA (SQ FT)	AREA (SQ YD)	POLYMERIZED HOT-MIX ASPHALT BINDER BINDER COURSE THICKNESS (INCH)	POLYMERIZED HOT-MIX ASPHALT SURFACE COURSE THICKNESS (INCH)	HOT-MIX ASPHALT SURFACE REMOVAL, 1 1/2" (SQ YD)	PORTLAND CEMENT CONCRETE SURFACE REMOVAL-BUTT JOINT (SQ YD)	BITUMINOUS MATERIALS (TACK COAT) (POUND)	POLYMERIZED HOT-MIX ASPHALT BINDER COURSE, IL-9.5FG, N90 (TON)	POLYMERIZED HOT-MIX ASPHALT SURFACE COURSE, IL-9.5, MIX "D", N90 (TON)
SOUTHBOUND US 51												
265+10.00	265+40.00	30.0	24.0	720.00	80.00	-	1.50		133.33	36.00		6.72
265+40.00	265+70.00	30.0	24.0	720.00	80.00	-	2.25			36.00		10.08
265+70.00	265+85.00	15.0	24.0	360.00	40.00	1.375	2.00			27.00	3.08	4.48
265+85.00	273+82.08	797.1	24.0	19129.92	2125.55	1.75	2.00			1434.74	208.30	238.06
STA EQU: 273+82.08 BK=273+79.78 AH												
273+79.78	277+50.65	370.9	24.0	8900.88	988.99	1.75	2.00			667.57	96.92	110.77
URBAN							TOTAL =	0	133	2201	308	370
277+50.65	278+17.00	66.3	24.0	1592.40	176.93	1.75	2.00			119.43	17.34	19.82
278+17.00	278+44.00	27.0	24.0	648.00	72.00	1.75	2.00			48.60	7.06	8.06
278+44.00	278+68.00	24.0	24.0	576.00	64.00	1.75	2.00			43.20	6.27	7.17
278+68.00	280+77.00	209.0	24.0	5016.00	557.33	1.75	2.00			376.20	54.62	62.42
280+77.00	281+92.00	115.0	24.0	2760.00	306.67	1.75	2.00			207.00	30.05	34.35
281+92.00	304+20.00	2228.0	24.0	53472.00	5941.33	1.75	2.00			4010.40	582.25	665.43
304+20.00	304+77.00	57.0	24.0-48.0	2052.00	228.00	1.75	2.00			153.90	22.34	25.54
304+77.00	305+44.00	67.0	48.0	3216.00	357.33	1.75	2.00			241.20	35.02	40.02
305+44.00	307+77.00	233.0	36.0	8388.00	932.00	1.75	2.00			629.10	91.34	104.38
307+77.00	308+90.00	113.0	36.0-27.0	3559.50	395.50	1.75	2.00			266.96	38.76	44.30
308+90.00	310+07.00	117.0	27.0-24.0	2983.50	331.50	1.75	2.00			223.76	32.49	37.13
310+07.00	330+74.00	2067.0	24.0	49608.00	5512.00	1.75	2.00			3720.60	540.18	617.34
330+74.00	331+83.00	109.0	24.0-54.0	4251.00	472.33	1.75	2.00			318.83	46.29	52.90
331+83.00	332+88.00	105.0	54.0	5670.00	630.00	1.75	2.00			425.25	61.74	70.56
332+88.00	335+42.00	254.0	36.0	9144.00	1016.00	1.75	2.00			685.80	99.57	113.79
335+42.00	339+06.00	364.0	36.0-24.0	10920.00	1213.33	1.75	2.00			819.00	118.91	135.89
339+06.00	357+67.00	1861.0	24.0	44664.00	4962.67	1.75	2.00			3349.80	486.34	555.82
357+67.00	357+93.80	26.8	24.0-29.0	710.20	78.91	1.75	2.00			53.27	7.73	8.84
STA EQU: 357+93.80 BK=357+91.02 AH												
357+91.02	358+21.00	30.0	29.0-48.0	1154.23	128.25	1.75	2.00			86.57	12.57	14.36
358+21.00	358+89.00	68.0	48.0	3264.00	362.67	1.75	2.00			244.80	35.54	40.62
358+89.00	361+12.00	223.0	48.0	10704.00	1189.33	1.75	2.00			802.80	116.55	133.21
361+12.00	361+20.00	8.0	48.0	384.00	42.67	1.75	2.00			28.80	4.18	4.78
361+20.00	363+42.00	222.0	48.0-24.0	7992.00	888.00	1.75	2.00			599.40	87.02	99.46
363+42.00	363+50.00	8.0	24.0	192.00	21.33	1.75	2.00			14.40	2.09	2.39
363+50.00	384+81.00	2131.0	24.0	51144.00	5682.67	1.75	2.00			3835.80	556.90	636.46
384+81.00	385+07.00	26.0	24.0	624.00	69.33	1.75	2.00			46.80	6.79	7.77
385+07.00	385+32.00	25.0	24.0	600.00	66.67	1.75	2.00			45.00	6.53	7.47
385+32.00	387+41.00	209.0	24.0	5016.00	557.33	1.75	2.00			376.20	54.62	62.42
387+41.00	388+56.00	115.0	24.0	2760.00	306.67	1.75	2.00			207.00	30.05	34.35
388+56.00	411+00.00	2244.0	24.0	53856.00	5984.00	1.75	2.00			4039.20	586.43	670.21
411+00.00	411+50.00	50.0	24.0-48.0	1800.00	200.00	1.75	2.00			135.00	19.60	22.40
411+50.00	412+16.00	66.0	48.0	3168.00	352.00	1.75	2.00			237.60	34.50	39.42
412+16.00	414+33.00	217.0	48.0	10416.00	1157.33	1.75	2.00			781.20	113.42	129.62
414+33.00	414+55.00	22.0	48.0	1056.00	117.33	1.75	2.00			79.20	11.50	13.14
414+55.00	416+63.00	208.0	48.0-26.0	7696.00	855.11	1.75	2.00			577.20	83.80	95.77
416+63.00	416+85.00	22.0	26.0	572.00	63.56	1.75	2.00			42.90	6.23	7.12
416+85.00	423+14.66	629.7	24.0	15111.84	1679.09	1.75	2.00			1133.39	164.55	188.06
423+14.66	423+29.66	15.0	24.0	360.00	40.00	1.375	2.00			27.00	3.08	4.48
423+29.66	423+59.66	30.0	24.0	720.00	80.00	-	2.25			36.00		10.08
423+59.66	423+89.66	30.0	24.0	720.00	80.00	-	1.50		133.33	36.00		6.72
423+89.66	424+93.91	104.3	-	-	-	-	-					
424+93.91	425+23.91	30.0	24.0	720.00	80.00	-	1.50		133.33	36.00		6.72
425+23.91	425+53.91	30.0	24.0	720.00	80.00	-	2.25			36.00		10.08
425+53.91	425+68.91	15.0	24.0	360.00	40.00	1.375	2.00			27.00	3.08	4.48
425+68.91	438+20.00	1251.1	24.0	30026.16	3336.24	1.75	2.00			2251.96	326.95	373.66
438+20.00	438+33.00	13.0	24.0	312.00	34.67	1.75	2.00			23.40	3.40	3.88
438+33.00	438+58.00	25.0	24.0	600.00	66.67	1.75	2.00			45.00	6.53	7.47
438+58.00	440+67.00	209.0	24.0	5016.00	557.33	1.75	2.00			376.20	54.62	62.42
440+67.00	441+82.00	115.0	24.0	2760.00	306.67	1.75	2.00			207.00	30.05	34.35
441+82.00	464+31.00	2249.0	24.0	53976.00	5997.33	1.75	2.00			4048.20	587.74	671.70
464+31.00	464+86.00	55.0	24.0-48.0	1980.00	220.00	1.75	2.00			148.50	21.56	24.64
464+86.00	465+52.00	66.0	48.0	3168.00	352.00	1.75	2.00			237.60	34.50	39.42
465+52.00	467+72.00	220.0	48.0	10560.00	1173.33	1.75	2.00			792.00	114.99	131.41
467+72.00	467+84.00	12.0	48.0	576.00	64.00	1.75	2.00			43.20	6.27	7.17
467+84.00	470+02.00	218.0	48.0-26.0	8066.00	896.22	1.75	2.00			604.95	87.83	100.38
470+02.00	470+14.00	12.0	26.0	312.00	34.67	1.75	2.00			23.40	3.40	3.88
470+14.00	491+43.00	2129.0	24.0	51096.00	5677.33	1.75	2.00			3832.20	556.38	635.86

HOT-MIX ASPHALT-SOUTHBOUND US 51 MAINLINE												
STATIONING		LENGTH	WIDTH	AREA	AREA	POLYMERIZED HOT-MIX ASPHALT BINDER BINDER COURSE THICKNESS	POLYMERIZED HOT-MIX ASPHALT SURFACE COURSE THICKNESS	HOT-MIX ASPHALT SURFACE REMOVAL, 1 1/2"	PORTLAND CEMENT CONCRETE SURFACE REMOVAL-BUTT JOINT	BITUMINOUS MATERIALS (TACK COAT)	POLYMERIZED HOT-MIX ASPHALT BINDER COURSE, IL-9.5FG, N90	POLYMERIZED HOT-MIX ASPHALT SURFACE COURSE, IL-9.5, MIX "D", N90
FROM	TO	(FOOT)	(FOOT)	(SQ FT)	(SQ YD)	(INCH)	(INCH)	(SQ YD)	(SQ YD)	(POUND)	(TON)	(TON)
SOUTHBOUND US 51												
491+43.00	491+69.00	26.0	24.0	624.00	69.33	1.75	2.00			46.80	6.79	7.77
491+69.00	491+94.00	25.0	24.0	600.00	66.67	1.75	2.00			45.00	6.53	7.47
491+94.00	494+03.00	209.0	24.0	5016.00	557.33	1.75	2.00			376.20	54.62	62.42
494+03.00	495+18.00	115.0	24.0	2760.00	306.67	1.75	2.00			207.00	30.05	34.35
495+18.00	517+60.00	2242.0	24.0	53808.00	5978.67	1.75	2.00			4035.60	585.91	669.61
517+60.00	518+17.00	57.0	24.0-48.0	2052.00	228.00	1.75	2.00			153.90	22.34	25.54
518+17.00	518+83.00	66.0	48.0	3168.00	352.00	1.75	2.00			237.60	34.50	39.42
518+83.00	521+07.00	224.0	48.0	10752.00	1194.67	1.75	2.00			806.40	117.08	133.80
521+07.00	521+15.00	8.0	48.0	384.00	42.67	1.75	2.00			28.80	4.18	4.78
521+15.00	523+37.00	222.0	48.0-26.0	8214.00	912.67	1.75	2.00			616.05	89.44	102.22
523+37.00	523+45.00	8.0	24.0	192.00	21.33	1.75	2.00			14.40	2.09	2.39
523+45.00	540+86.00	1741.0	24.0	41784.00	4642.67	1.75	2.00			3133.80	454.98	519.98
540+86.00	541+15.00	29.0	24.0	696.00	77.33	1.75	2.00			52.20	7.58	8.66
541+15.00	541+39.00	24.0	24.0	576.00	64.00	1.75	2.00			43.20	6.27	7.17
541+39.00	543+43.00	204.0	24.0	4896.00	544.00	1.75	2.00			367.20	53.31	60.93
543+43.00	544+58.00	115.0	24.0	2760.00	306.67	1.75	2.00			207.00	30.05	34.35
544+58.00	570+94.00	2636.0	24.0	63264.00	7029.33	1.75	2.00			4744.80	688.87	787.29
570+94.00	571+52.00	58.0	24.0-48.0	2088.00	232.00	1.75	2.00			156.60	22.74	25.98
571+52.00	572+18.00	66.0	48.0	3168.00	352.00	1.75	2.00			237.60	34.50	39.42
572+18.00	574+01.69	183.7	48.0	8817.12	979.68	1.75	2.00			661.28	96.01	109.72
STA EQU: 574+01.69 BK=174+89.59 AH												
174+89.59	175+28.00	38.4	48.0	1843.68	204.85	1.75	2.00			138.28	20.08	22.94
175+28.00	175+36.00	8.0	48.0	384.00	42.67	1.75	2.00			28.80	4.18	4.78
175+36.00	177+63.00	227.0	48.0-24.0	8172.00	908.00	1.75	2.00			612.90	88.98	101.70
177+63.00	177+69.00	6.0	24.0	144.00	16.00	1.75	2.00			10.80	1.57	1.79
177+69.00	193+62.00	1593.0	24.0	38232.00	4248.00	1.75	2.00			2867.40	416.30	475.78
193+62.00	194+16.00	54.0	24.0-48.0	1944.00	216.00	1.75	2.00			145.80	21.17	24.19
194+16.00	194+81.00	65.0	48.0	3120.00	346.67	1.75	2.00			234.00	33.97	38.83
194+81.00	195+15.00	34.0	48.0-36.0	1428.00	158.67	1.75	2.00			107.10	15.55	17.77
195+16.00	198+16.00	300.0	36.0	10800.00	1200.00	1.75	2.00			810.00	117.60	134.40
198+16.00	201+17.00	301.0	36.0-24.0	9030.00	1003.33	1.75	2.00			677.25	98.33	112.37
201+17.00	219+38.00	1821.0	24.0	43704.00	4856.00	1.75	2.00			3277.80	475.89	543.87
219+38.00	219+75.00	37.0	24.0	888.00	98.67	1.75	2.00			66.60	9.67	11.05
219+75.00	219+99.00	24.0	24.0	576.00	64.00	1.75	2.00			43.20	6.27	7.17
219+99.00	222+05.00	206.0	24.0	4944.00	549.33	1.75	2.00			370.80	53.83	61.53
222+05.00	224+33.00	228.0	24.0	5472.00	608.00	1.75	2.00			410.40	59.58	68.10
224+33.00	232+48.00	815.0	24.0	19560.00	2173.33	1.75	2.00			1467.00	212.99	243.41
232+48.00	233+00.00	52.0	24.0-48.0	1872.00	208.00	1.75	2.00			140.40	20.38	23.30
233+00.00	233+58.00	58.0	48.0	2784.00	309.33	1.75	2.00			208.80	30.31	34.65
233+58.00	234+39.00	81.0	48.0-36.0	3402.00	378.00	1.75	2.00			255.15	37.04	42.34
234+39.00	236+96.00	257.0	48.0	12336.00	1370.67	1.75	2.00			925.20	134.33	153.51
236+96.00	237+56.00	60.0	48.0	2880.00	320.00	1.75	2.00			216.00	31.36	35.84
237+56.00	239+96.00	240.0	48.0-26.0	8880.00	986.67	1.75	2.00			666.00	96.69	110.51
239+96.00	240+56.00	60.0	26.0	1560.00	173.33	1.75	2.00			117.00	16.99	19.41
240+56.00	253+64.00	1308.0	24.0	31392.00	3488.00	1.75	2.00			2354.40	341.82	390.66
253+64.00	254+01.00	37.0	24.0	888.00	98.67	1.75	2.00			66.60	9.67	11.05
254+01.00	254+26.00	25.0	24.0	600.00	66.67	1.75	2.00			45.00	6.53	7.47
254+26.00	256+32.00	206.0	24.0	4944.00	549.33	1.75	2.00			370.80	53.83	61.53
256+32.00	258+63.00	231.0	24.0	5544.00	616.00	1.75	2.00			415.80	60.37	68.99
258+63.00	261+08.97	246.0	24.0	5903.28	655.92	1.75	2.00			442.75	64.28	73.46
261+08.97	261+23.97	15.0	24.0	360.00	40.00	1.375	2.00			27.00	3.08	4.48
261+23.97	261+53.97	30.0	24.0	720.00	80.00	-	2.25			36.00		10.08
261+53.97	261+83.97	30.0	24.0	720.00	80.00	-	1.50		133.33	36.00		6.72
261+83.97	262+75.14	91.2	-	-	-	-	-					
262+75.14	263+05.14	30.0	24.0	720.00	80.00	-	1.50		133.33	36.00		6.72
263+05.14	263+35.14	30.0	24.0	720.00	80.00	-	2.25			36.00		10.08
263+35.14	263+50.14	15.0	24.0	360.00	40.00	1.375	2.00			27.00	3.08	4.48
263+50.14	286+15.00	2264.9	24.0	54356.64	6039.63	1.75	2.00			4076.75	591.88	676.44
286+15.00	286+68.00	53.0	24.0-48.0	1908.00	212.00	1.75	2.00			143.10	20.78	23.74
286+68.00	287+32.00	64.0	48.0	3072.00	341.33	1.75	2.00			230.40	33.45	38.23
287+32.00	287+76.00	44.0	48.0	2112.00	234.67	1.75	2.00			158.40	23.00	26.28
287+76.00	287+91.00	15.0	48.0	720.00	80.00	1.375	2.00			54.00	6.16	8.96
287+91.00	288+21.00	30.0	48.0	1440.00	160.00	-	2.25			72.00		20.16
288+21.00	288+51.00	30.0	48.0	1440.00	160.00	-	1.50		186.67	72.00		13.44
RURAL							TOTAL =	0	720	80505	11620	13387

MODEL: Default
FILE NAME: pw:\\ildot-pw.bentley.com:PWIDOT\Documents\IDOT Offices\District 7\Projects\74800\CAD\data\CAD\sheets\0774880-sht-schedule.dgn

USER NAME = Mona.Steffen	DESIGNED -	REVISED -	
	DRAWN -	REVISED -	
PLOT SCALE = 100.0000 ' / in.	CHECKED -	REVISED -	
PLOT DATE = 4/6/2023	DATE -	REVISED -	

STATE OF ILLINOIS
DEPARTMENT OF TRANSPORTATION

SCHEDULE OF QUANTITIES

SCALE: | SHEET 9 OF 29 SHEETS | STA. TO STA.

F.A.P RTE.	SECTION	COUNTY	TOTAL SHEETS	SHEET NO.
322	50,51,52 RS-3	MACON	79	19
		CONTRACT NO. 74800		
	ILLINOIS	FED. AID PROJECT		

SHOULDERS-NORTHBOUND US 51

STATIONING FROM	STATIONING TO	LENGTH (FOOT)	PL HMA SHOULDER WIDTH (FOOT)	DL HMA SHOULDER WIDTH (FOOT)	PL AGG. WEDGE SHOULDER WIDTH (FOOT)	DL AGG.WEDGE SHOULDER WIDTH (FOOT)	HMA SHOULDER AREA (SQ FT)	HMA SHOULDER AREA (SQ YD)	*** HOT-MIX ASPHALT SHOULDER THICKNESS (INCH)	HOT-MIX ASPHALT SURFACE REMOVAL, 1 1/2" (SQ YD)	BITUMINOUS MATERIALS (TACK COAT) (POUND)	HOT-MIX ASPHALT SHOULDERS (TON)	AGGREGATE WEDGE SHOULDER, TYPE B (TON)
NORTHBOUND US 51													
265+10.00	265+40.00	30.0	6.0	10.0	3.0	3.0	480.00	53.33	3.00	53.33	36.00	8.96	2.70
265+40.00	265+70.00	30.0	6.0	10.0	3.0	3.0	480.00	53.33	3.75	53.33	36.00	11.20	2.70
265+70.00	265+85.00	15.0	6.0	10.0	3.0	3.0	240.00	26.67	4.88	26.67	24.00	7.28	1.35
265+85.00	273+82.08	797.1	6.0	10.0	3.0	3.0	12753.28	1417.03	5.25	1417.03	1275.33	416.61	71.87
STA EQU: 273+82.08 BK= 273+79.78 AH													
273+79.78	275+20.00	140.2	6.0	10.0	3.0	3.0	2243.52	249.28	5.25	249.28	224.35	73.29	12.64
275+20.00	276+35.00	115.0	6.0-12.0	10.0	3.0	3.0	2185.00	242.78	5.25	242.78	218.50	71.38	10.37
276+35.00	277+50.65	115.7	12.0	10.0	3.0	3.0	2544.30	282.70	5.25	282.70	254.43	83.11	10.43
URBAN									TOTAL =	**2325**	**2069**	**672**	**112**
277+50.65	278+44.00	93.3	12.0	10.0	3.0	3.0	2053.70	228.19	5.25	228.19	205.37	67.09	8.42
278+44.00	278+68.00	24.0	24.0	10.0	3.0	3.0	816.00	90.67	5.25	90.67	81.60	26.66	2.16
278+68.00	278+95.00	27.0	12.0-6.0	10.0	3.0	3.0	513.00	57.00	5.25	57.00	51.30	16.76	2.43
278+95.00	300+15.00	2120.0	6.0	10.0	3.0	3.0	33920.00	3768.89	5.25	3768.89	3392.00	1108.05	191.14
300+15.00	302+45.00	230.0	6.0-4.0	10.0	3.0	3.0	3450.00	383.33	5.25	383.33	345.00	112.70	20.74
302+45.00	304+40.00	195.0	4.0	10.0	3.0	3.0	2730.00	303.33	5.25	303.33	273.00	89.18	17.58
304+40.00	304+77.00	37.0	4.0	10.0	3.0	3.0	518.00	57.56	5.25	57.56	51.80	16.92	3.34
304+77.00	305+44.00	67.0	-	10.0	-	3.0	670.00	74.44	5.25	74.44	67.00	21.89	3.02
305+44.00	305+90.00	46.0	4.0-6.0	10.0	3.0	3.0	690.00	76.67	5.25	76.67	69.00	22.54	4.15
305+90.00	324+88.00	1898.0	6.0	10.0	3.0	3.0	30368.00	3374.22	5.25	3374.22	3036.80	992.02	171.13
324+88.00	328+13.00	325.0	6.0	10.0-4.0	3.0	3.0	4225.00	469.44	5.25	469.44	422.50	138.02	29.30
328+13.00	328+24.00	11.0	6.0	4.0	3.0	3.0	110.00	12.22	5.25	12.22	11.00	3.59	0.99
328+24.00	329+40.00	116.0	6.0-12.0	4.0	3.0	3.0	1508.00	167.56	5.25	167.56	150.80	49.26	10.46
329+40.00	331+30.00	190.0	12.0	4.0	3.0	3.0	3040.00	337.78	5.25	337.78	304.00	99.31	17.13
331+30.00	331+83.00	53.0	12.0	-	3.0	-	636.00	70.67	5.25	70.67	63.60	20.78	2.39
331+83.00	332+88.00	105.0	-	-	-	-	-	-	-				
332+88.00	333+52.00	64.0	6.0	10.0	3.0	3.0	1024.00	113.78	5.25	113.78	102.40	33.45	5.77
333+52.00	353+60.00	2008.0	6.0	10.0	3.0	3.0	32128.00	3569.78	5.25	3569.78	3212.80	1049.51	181.05
353+60.00	353+68.00	8.0	6.0	10.0	3.0	3.0	128.00	14.22	5.25	14.22	12.80	4.18	0.72
353+68.00	355+90.00	222.0	6.0-4.0	10.0-4.0	3.0	3.0	2664.00	296.00	5.25	296.00	266.40	87.02	20.02
355+90.00	355+98.00	8.0	4.0	4.0	3.0	3.0	64.00	7.11	5.25	7.11	6.40	2.09	0.72
355+98.00	357+93.80	195.8	4.0	4.0	3.0	3.0	1566.40	174.04	5.25	174.04	156.64	51.17	17.65
STA EQU: 357+93.80 BK= 357+91.02 AH													
357+91.02	358+21.00	30.0	4.0	4.0	3.0	3.0	239.84	26.65	5.25	26.65	23.98	7.83	2.70
358+21.00	358+89.00	68.0	-	-	-	-	-	-	-				
358+89.00	359+45.00	56.0	4.0	10.0	3.0	3.0	784.00	87.11	5.25	87.11	78.40	25.61	5.05
359+45.00	381+84.00	2239.0	6.0	10.0	3.0	3.0	35824.00	3980.44	5.25	3980.44	3582.40	1170.25	201.87
381+84.00	382+99.00	115.0	6.0-12.0	10.0	3.0	3.0	2185.00	242.78	5.25	242.78	218.50	71.38	10.37
382+99.00	385+07.00	208.0	12.0	10.0	3.0	3.0	4576.00	508.44	5.25	508.44	457.60	149.48	18.75
385+07.00	385+32.00	25.0	24.0	10.0	-	3.0	850.00	94.44	5.25	94.44	85.00	27.77	1.13
385+32.00	385+58.00	26.0	12.0-6.0	10.0	3.0	3.0	494.00	54.89	5.25	54.89	49.40	16.14	2.34
385+58.00	406+81.00	2123.0	6.0	10.0	3.0	3.0	33968.00	3774.22	5.25	3774.22	3396.80	1109.62	191.41
406+81.00	406+83.00	2.0	6.0	10.0	3.0	3.0	32.00	3.56	5.25	3.56	3.20	1.05	0.18
406+83.00	409+11.00	228.0	6.0-4.0	10.0-4.0	3.0	3.0	2736.00	304.00	5.25	304.00	273.60	89.38	20.56
409+11.00	409+33.00	22.0	4.0	4.0	3.0	3.0	176.00	19.56	5.25	19.56	17.60	5.75	1.98
409+33.00	411+50.00	217.0	4.0	4.0	3.0	3.0	1736.00	192.89	5.25	192.89	173.60	56.71	19.57
411+50.00	412+16.00	66.0	-	-	-	-	-	-	-				
412+16.00	412+66.00	50.0	4.0-6.0	10.0	3.0	3.0	750.00	83.33	5.25	83.33	75.00	24.50	4.51
412+66.00	423+75.07	1109.1	6.0	10.0	3.0	3.0	17745.12	1971.68	5.25	1971.68	1774.51	579.67	100.00
423+75.07	423+90.07	15.0	6.0	10.0	3.0	3.0	240.00	26.67	4.88	26.67	24.00	7.28	1.35
423+90.07	424+20.07	30.0	6.0	10.0	3.0	3.0	480.00	53.33	3.75	53.33	36.00	11.20	2.70
424+20.07	424+50.07	30.0	6.0	10.0	3.0	3.0	480.00	53.33	3.00	53.33	36.00	8.96	2.70
424+50.07	425+54.32	104.3	BRIDGE OMISSION										
425+54.32	425+84.32	30.0	6.0	10.0	3.0	3.0	480.00	53.33	3.00	53.33	36.00	8.96	2.70
425+84.32	426+14.32	30.0	6.0	10.0	3.0	3.0	480.00	53.33	3.75	53.33	36.00	11.20	2.70
426+14.32	426+29.32	15.0	6.0	10.0	3.0	3.0	240.00	26.67	4.88	26.67	24.00	7.28	1.35
426+29.32	434+02.00	772.7	6.0	10.0	3.0	3.0	12362.88	1373.65	5.25	1373.65	1236.29	403.85	69.67
434+02.00	434+32.00	30.0	6.0	10.0	3.0	3.0	480.00	53.33	4.50	53.33	36.00	13.44	1.85
434+32.00	435+10.00	78.0	6.0	10.0	3.0	3.0	1248.00	138.67	3.75	138.67	93.60	29.12	4.81
435+10.00	436+25.00	115.0	6.0-12.0	10.0	3.0	3.0	2185.00	242.78	3.75	242.78	163.88	50.98	7.09
436+25.00	438+33.00	208.0	12.0	10.0	3.0	3.0	4576.00	508.44	3.75	508.44	343.20	106.77	12.83
438+33.00	438+58.00	25.0	24.0	10.0	3.0	3.0	850.00	94.44	3.75	94.44	63.75	19.83	1.54
438+58.00	438+72.00	14.0	12.0-6.0	10.0	3.0	3.0	266.00	29.56	3.75	29.56	19.95	6.21	0.86
438+72.00	460+24.00	2152.0	6.0	10.0	3.0	3.0	34432.00	3825.78	3.75	3825.78	2582.40	803.41	132.76
460+24.00	460+34.00	10.0	6.0	10.0	3.0	3.0	160.00	17.78	3.75	17.78	12.00	3.73	0.62
460+34.00	462+54.00	220.0	6.0-4.0	10.0-4.0	3.0	3.0	2640.00	293.33	3.75	293.33	198.00	61.60	13.57
462+54.00	462+64.00	10.0	4.0	4.0	3.0	3.0	80.00	8.89	3.75	8.89	6.00	1.87	0.62
462+64.00	464+49.00	185.0	4.0	4.0	3.0	3.0	1480.00	164.44	3.75	164.44	111.00	34.53	11.41

SHOULDERS-NORTHBOUND US 51

STATIONING FROM	STATIONING TO	LENGTH (FOOT)	PL HMA SHOULDER WIDTH (FOOT)	DL HMA SHOULDER WIDTH (FOOT)	PL AGG. WEDGE SHOULDER WIDTH (FOOT)	DL AGG.WEDGE SHOULDER WIDTH (FOOT)	HMA SHOULDER AREA (SQ FT)	HMA SHOULDER AREA (SQ YD)	*** HOT-MIX ASPHALT SHOULDER THICKNESS (INCH)	HOT-MIX ASPHALT SURFACE REMOVAL, 1 1/2" (SQ YD)	BITUMINOUS MATERIALS (TACK COAT) (POUND)	HOT-MIX ASPHALT SHOULDERS (TON)	AGGREGATE WEDGE SHOULDER, TYPE B (TON)
NORTHBOUND US 51													
464+49.00	464+86.00	37.0	4.0	-	3.0	-	148.00	16.44	3.75	16.44	11.10	3.45	1.14
464+86.00	465+52.00	66.0	-	-	-	-	-	-	-				
465+52.00	466+07.00	55.0	4.0-6.0	10.0	3.0	3.0	825.00	91.67	3.75	91.67	61.88	19.25	3.39
466+07.00	488+46.00	2239.0	6.0	10.0	3.0	3.0	35824.00	3980.44	3.75	3980.44	2686.80	835.89	138.12
488+46.00	489+61.00	115.0	6.0-12.0	10.0	3.0	3.0	2185.00	242.78	3.75	242.78	163.88	50.98	7.09
489+61.00	491+69.00	208.0	12.0	10.0	3.0	3.0	4576.00	508.44	3.75	508.44	343.20	106.77	12.83
491+69.00	491+94.00	25.0	24.0	10.0	3.0	3.0	850.00	94.44	3.75	94.44	63.75	19.83	1.54
491+94.00	492+08.00	14.0	12.0-6.0	10.0	3.0	3.0	266.00	29.56	3.75	29.56	19.95	6.21	0.86
492+00.00	513+55.00	2147.0	6.0	10.0	3.0	3.0	34352.00	3816.89	3.75	3816.89	2576.40	801.55	132.45
513+55.00	513+63.00	8.0	6.0	10.0	3.0	3.0	128.00	14.22	3.75	14.22	9.60	2.99	0.49
513+63.00	515+85.00	222.0	6.0-4.0	10.0-4.0	3.0	3.0	2664.00	296.00	3.75	296.00	199.80	62.16	13.70
515+85.00	515+93.00	8.0	4.0	4.0	3.0	3.0	64.00	7.11	3.75	7.11	4.80	1.49	0.49
515+93.00	517+80.00	187.0	4.0	4.0	3.0	3.0	1496.00	166.22	3.75	166.22	112.20	34.91	11.54
517+80.00	518+17.00	37.0	4.0	-	3.0	-	148.00	16.44	3.75	16.44	11.10	3.45	1.14
518+17.00	518+83.00	66.0	-	-	-	-	-	-	-				
518+83.00	519+22.00	39.0	4.0-6.0	10.0	3.0	3.0	585.00	65.00	3.75	65.00	43.88	13.65	2.41
519+22.00	537+86.00	1864.0	6.0	10.0	3.0	3.0	29824.00	3313.78	3.75	3313.78	2236.80	695.89	114.99
537+86.00	539+01.00	115.0	6.0-12.0	10.0	3.0	3.0	2185.00	242.78	3.75	242.78	163.88	50.98	7.09
539+01.00	541+15.00	214.0	12.0	10.0	3.0	3.0	4708.00	523.11	3.75	523.11	353.10	109.85	13.20
541+15.00	541+39.00	24.0	24.0	10.0	3.0	3.0	816.00	90.67	3.75	90.67	61.20	19.04	1.48
541+39.00	541+68.00	29.0	12.0-6.0	10.0	3.0	3.0	551.00	61.22	3.75	61.22	41.33	12.86	1.79
541+68.00	566+89.00	2521.0	6.0	10.0	3.0	3.0	40336.00	4481.78	3.75	4481.78	3025.20	941.17	155.52
566+89.00	566+97.00	8.0	6.0	10.0	3.0	3.0	128.00	14.22	3.75	14.22	9.60	2.99	0.49
566+97.00	569+19.00	222.0	6.0-4.0	10.0-4.0	3.0	3.0	2664.00	296.00	3.75	296.00	199.80	62.16	13.70
569+19.00	569+27.00	8.0	4.0	4.0	3.0	3.0	64.00	7.11	3.75	7.11	4.80	1.49	0.49
569+27.00	571+14.00	187.0	4.0	4.0	3.0	3.0	1496.00	166.22	3.75	166.22	112.20	34.91	11.54
571+14.00	571+52.00	38.0	4.0	-	3.0	-	152.00	16.89	3.75	16.89	11.40	3.55	1.17
571+52.00	572+18.00	66.0	-	-	-	-	-	-	-				
572+18.00	572+24.00	6.0	4.0	-	3.0	-	24.00	2.67	3.75	2.67	1.80	0.56	0.19
572+24.00	572+54.00	30.0	4.0	10.0	3.0	3.0	420.00	46.67	4.50	46.67	31.50	11.76	1.85
572+54.00	574+01.69	147.7	6.0	10.0	3.0	3.0	2363.04	262.56	5.25	262.56	236.30	77.19	13.32
STA EQU: 574+01.69 BK=174+89.59 AH													
174+89.59	187+58.00	1268.4	6.0	10.0	3.0	3.0	20294.56	2254.95	5.25	2254.95	2029.46	662.96	114.36
187+58.00	189+54.00	196.0	6.0	10.0-4	3.0	3.0	2548.00	283.11	5.25	283.11	254.80	83.23	17.67
189+54.00	190+53.00	99.0	6.0-8.0	4.0	3.0	3.0	1089.00	121.00	5.25	121.00	108.90	35.57	8.93
190+53.00	191+83.00	130.0	8.0-16.0	4.0	3.0	3.0	2080.00	231.11	5.25	231.11	208.00	67.95	11.72
191+83.00	193+61.00	178.0	16.0	4.0	3.0	3.0	3560.00	395.56	5.25	395.56	356.00	116.29	16.05
193+61.00	193+77.00	16.0	16.0	-	3.0	-	256.00	28.44	5.25	28.44	25.60	8.36	0.72
193+77.00	194+16.00	39.0	4.0	-	3.0	-	156.00	17.33	5.25	17.33	15.60	5.10	1.76
194+16.00	194+81.00	65.0	-	-	-	-	-	-	-				
194+81.00	195+40.00	59.0	4.0-6.0	-	3.0	-	295.00	32.78	5.25	32.78	29.50	9.64	2.66
195+40.00	215+35.00	1995.0	6.0	10.0	3.0	3.0	31920.00	3546.67	5.25	3546.67	3192.00	1042.72	179.87
215+35.00	217+67.00	232.0	6.0-12.0	10.0	3.0	3.0	4408.00	489.78	5.25	489.78	440.80	143.99	20.92
217+67.00	219+75.00	208.0	12.0	10.0	3.0	3.0	4576.00	508.44	5.25	508.44	457.60	149.48	18.75
219+75.00	219+99.00	24.0	24.0	10.0	3.0	3.0	816.00	90.67	5.25	90.67	81.60	26.66	2.16
219+99.00	220+36.00	37.0	12.0-6.0	10.0	3.0	3.0	703.00	78.11	5.25	78.11	70.30	22.96	3.34
220+36.00	226+02.00	566.0	6.0	10.0	3.0	3.0	9056.00	1006.22	5.25	1006.22	905.60	295.83	51.03
226+02.00	226+63.00	61.0	6.0	10.0	3.0	3.0	976.00	108.44	5.25	108.44	97.60	31.88	5.50
226+63.00	229+02.00	239.0	6.0-4.0	10.0-4.0	3.0	3.0	2868.00	318.67	5.25	318.67	286.80	93.69	21.55
229+02.00	229+63.00	61.0	4.0	4.0	3.0	3.0	488.00	54.22	5.25	54.22	48.80	15.94	5.50
229+63.00	232+19.00	256.0	4.0	4.0	3.0	3.0	2048.00	227.56	5.25	227.56	204.80	66.90	23.08
232+19.00	233+00.00	81.0	4.0	-	3.0	-	324.00	36.00	5.25	36.00	32.40	10.58	3.65
233+00.00	233+58.00	58.0	-	-	-	-	-	-	-				
233+58.00	234+10.00	52.0	4.0-6.0	-	3.0	-	260.00	28.89	5.25	28.89	26.00	8.49	2.34
234+10.00	249+64.00	1554.0	6.0	10.0	3.0	3.0	24864.00	2762.67	5.25	2762.67	2486.40	812.22	140.11
249+64.00	251+94.00	230.0	6.0-12.0	10.0	3.0	3.0	4370.00	485.56	5.25	485.56	437.00	142.75	20.74
251+94.00	254+01.00	207.0	12.0	10.0	3.0	3.0	4554.00	506.00	5.25	506.00	455.40	148.76	18.66
254+01.00	254+26.00	25.0	24.0	10.0	-	3.0	850.00	94.44	5.25	94.44	85.00	27.77	1.13
254+26.00	254+62.00	36.0	12.0-6.0	10.0	3.0	3.0	684.00	76.00	5.25	76.00	68.40	22.34	3.25
254+62.00	261+35.18	673.2	6.0	10.0	3.0	3.0	10770.88	1196.76	5.25	1196.76	1077.09	351.85	60.70
261+35.18	261+50.18	15.0	6.0	10.0	3.0	3.0	240.00	26.67	4.88	26.67	24.00	7.28	1.35
261+50.18	261+80.18	30.0	6.0	10.0	3.0	3.0	480.00	53.33	3.75	53.33	36.00	11.20	2.70
261+80.18	262+10.18	30.0	6.0	10.0	3.0	3.0	480.00	53.33	3.00	53.33	36.00	8.96	2.70
262+10.18	263+01.35	91.2	BRIDGE OMISSION										
263+01.35	263+31.35	30.0	6.0	10.0	3.0	3.0	480.00	53.33	3.00	53.33	36.00	8.96	2.70
263+31.35	263+61.35	30.0	6.0	10.0	3.0	3.0	480.00	53.33	3.75	53.33	36.00	11.20	2.70
263+61.35	263+76.35	15.0	6.0	10.0	3.0	3.0	240.00	26.67	4.88	26.67	24.00	7.28	1.35

SHOULDERS-NORTHBOUND US 51													
STATIONING FROM	STATIONING TO	LENGTH (FOOT)	PL HMA SHOULDER WIDTH (FOOT)	DL HMA SHOULDER WIDTH (FOOT)	PL AGG. WEDGE SHOULDER WIDTH (FOOT)	DL AGG.WEDGE SHOULDER WIDTH (FOOT)	HMA SHOULDER AREA (SQ FT)	HMA SHOULDER AREA (SQ YD)	*** HOT-MIX ASPHALT SHOULDER THICKNESS (INCH)	HOT-MIX ASPHALT SURFACE REMOVAL, 1 1/2" (SQ YD)	BITUMINOUS MATERIALS (TACK COAT) (POUND)	HOT-MIX ASPHALT SHOULDERS (TON)	AGGREGATE WEDGE SHOULDER, TYPE B (TON)
NORTHBOUND US 51													
263+76.35	282+00.00	1823.7	6.0	10.0	3.0	3.0	29178.40	3242.04	5.25	3242.04	2917.84	953.16	164.42
282+00.00	282+17.00	17.0	6.0	10.0	3.0	3.0	272.00	30.22	5.25	30.22	27.20	8.89	1.53
282+17.00	284+30.00	213.0	6.0-4.0	10.0-4.0	3.0	3.0	2556.00	284.00	5.25	284.00	255.60	83.50	19.20
284+30.00	284+47.00	17.0	4.0	4.0	3.0	3.0	136.00	15.11	5.25	15.11	13.60	4.44	1.53
284+47.00	286+49.00	202.0	4.0	4.0	3.0	3.0	1616.00	179.56	5.25	179.56	161.60	52.79	18.21
286+49.00	286+68.00	19.0	4.0	-	3.0	-	76.00	8.44	5.25	8.44	7.60	2.48	0.86
286+68.00	287+32.00	64.0	-	-	-	-	-	-	-				
287+32.00	287+76.00	44.0	4.0-6.0	10.0	3.0	3.0	660.00	73.33	5.25	73.33	66.00	21.56	3.97
287+76.00	287+91.00	15.0	6.0	10.0	3.0	3.0	240.00	26.67	4.88	26.67	24.00	7.28	1.35
287+91.00	288+21.00	30.0	6.0	10.0	3.0	3.0	480.00	53.33	3.75	53.33	36.00	11.20	2.70
288+21.00	288+51.00	30.0	6.0	10.0	3.0	3.0	480.00	53.33	3.00	53.33	36.00	8.96	2.70
RURAL									TOTAL =	70092	57566	18538	3212

***SEE TYPICAL CROSS SECTIONS FOR INDIVIDUAL HMA SHOULDER LIFTS

TEMPORARY RAMP				
STATIONING FROM	STATIONING TO	LENGTH (FOOT)	WIDTH)FOOT)	TEMPORARY RAMP (SQ YD)
NORTHBOUND US 51				
265+10.00	265+15.00	5.00	40.00	22.22
URBAN			TOTAL =	22
424+45.07	424+50.07	5.00	40.00	22.22
425+54.32	425+59.32	5.00	40.00	22.22
434+02.00	434+07.00	5.00	40.00	22.22
572+49.00	572+54.00	5.00	40.00	22.22
262+05.18	262+10.18	5.00	40.00	22.22
263+01.35	263+06.35	5.00	40.00	22.22
288+46.00	288+51.00	5.00	40.00	22.22
RURAL			TOTAL =	156
SOUTHBOUND US 51				
265+10.00	265+15.00	5.00	40.00	22.22
URBAN			TOTAL =	22
423+84.66	423+89.66	5.00	40.00	22.22
424+93.91	424+98.91	5.00	40.00	22.22
261+78.97	261+83.97	5.00	40.00	22.22
262+75.14	262+80.14	5.00	40.00	22.22
288+46.00	288+51.00	5.00	56.00	31.11
RURAL			TOTAL =	120
			URBAN PROJECT TOTAL =	44
			RURAL PROJECT TOTAL =	276
			PROJECT TOTAL =	320

SHOULDERS-SOUTHBOUND US 51

STATIONING FROM	STATIONING TO	LENGTH (FOOT)	PL HMA SHOULDER WIDTH (FOOT)	DL HMA SHOULDER WIDTH (FOOT)	PL AGG. WEDGE SHOULDER WIDTH (FOOT)	DL AGG.WEDGE SHOULDER WIDTH (FOOT)	HMA SHOULDER AREA (SQ FT)	HMA SHOULDER AREA (SQ YD)	*** HOT-MIX ASPHALT SHOULDER THICKNESS (INCH)	HOT-MIX ASPHALT SURFACE REMOVAL, 1 1/2" (SQ YD)	BITUMINOUS MATERIALS (TACK COAT) (POUND)	HOT-MIX ASPHALT SHOULDERS (TON)	AGGREGATE WEDGE SHOULDER, TYPE B (TON)
SOUTHBOUND US 51													
265+10.00	265+40.00	30.0	6.0	10.0	3.0	3.0	480.00	53.33	3.00	53.33	36.00	8.96	2.70
265+40.00	265+70.00	30.0	6.0	10.0	3.0	3.0	480.00	53.33	3.75	53.33	36.00	11.20	2.70
265+70.00	265+85.00	15.0	6.0	10.0	3.0	3.0	240.00	26.67	4.88	26.67	24.00	7.28	1.35
265+85.00	273+82.08	797.1	6.0	10.0	3.0	3.0	12753.28	1417.03	5.25	1417.03	1275.33	416.61	71.87
STA EQU: 273+82.08 BK=273+79.78 AH													
273+79.78	277+50.65	370.9	6.0	10.0	3.0	3.0	5933.92	659.32	5.25	659.32	593.39	193.84	33.44
URBAN									TOTAL =	**2210**	**1965**	**638**	**112**
277+50.65	278+17.00	66.3	6.0	10.0	3.0	3.0	1061.60	117.96	5.25	117.96	106.16	34.68	5.98
278+17.00	278+44.00	27.0	6.0-12.0	10.0	3.0	3.0	513.00	57.00	5.25	57.00	51.30	16.76	2.43
278+44.00	278+68.00	24.0	24.0	10.0	-	3.0	816.00	90.67	5.25	90.67	81.60	26.66	1.08
278+68.00	280+77.00	209.0	12.0	10.0	3.0	3.0	4598.00	510.89	5.25	510.89	459.80	150.20	18.84
280+77.00	281+92.00	115.0	12.0-6.0	10.0	3.0	3.0	2185.00	242.78	5.25	242.78	218.50	71.38	10.37
281+92.00	304+20.00	2228.0	6.0	10.0	3.0	3.0	35648.00	3960.89	5.25	3960.89	3564.80	1164.50	200.88
304+20.00	304+77.00	57.0	4.0	10.0	3.0	3.0	798.00	88.67	5.25	88.67	79.80	26.07	5.14
304+77.00	305+44.00	67.0	-	-	-	-	-	-	-				
305+44.00	307+77.00	233.0	12.0	4.0	3.0	3.0	3728.00	414.22	5.25	414.22	372.80	121.78	21.01
307+77.00	308+90.00	113.0	12.0-6.0	4.0-6.0	3.0	3.0	1582.00	175.78	5.25	175.78	158.20	51.68	10.19
308+90.00	310+07.00	117.0	6.0	6.0-10.0	3.0	3.0	1638.00	182.00	5.25	182.00	163.80	53.51	10.55
310+07.00	330+74.00	2067.0	6.0	10.0	3.0	3.0	33072.00	3674.67	5.25	3674.67	3307.20	1080.35	186.36
330+74.00	331+83.00	109.0	4.0	10.0	3.0	3.0	1526.00	169.56	5.25	169.56	152.60	49.85	9.83
331+83.00	332+88.00	105.0	-	10.0	-	3.0	1050.00	116.67	5.25	116.67	105.00	34.30	4.73
332+88.00	335+42.00	254.0	6.0	10.0	3.0	3.0	4064.00	451.56	5.25	451.56	406.40	132.76	22.90
335+42.00	339+06.00	364.0	6.0	10.0	3.0	3.0	5824.00	647.11	5.25	647.11	582.40	190.25	32.82
339+06.00	357+67.00	1861.0	6.0	10.0	3.0	3.0	29776.00	3308.44	5.25	3308.44	2977.60	972.68	167.79
357+67.00	357+93.80	26.8	4.0	10.0	3.0	3.0	375.20	41.69	5.25	41.69	37.52	12.26	2.42
STA EQU: 357+93.80 BK=357+91.02 AH													
357+91.02	358+21.00	30.0	4.0	10.0	3.0	3.0	419.72	46.64	5.25	46.64	41.97	13.71	2.70
358+21.00	358+89.00	68.0	-	-	-	-	-	-	-				
358+89.00	361+12.00	223.0	4.0	4.0	3.0	3.0	1784.00	198.22	5.25	198.22	178.40	58.28	20.11
361+12.00	361+20.00	8.0	4.0	4.0	3.0	3.0	64.00	7.11	5.25	7.11	6.40	2.09	0.72
361+20.00	363+42.00	222.0	4.0-6.0	4.0-10.0	3.0	3.0	2664.00	296.00	5.25	296.00	266.40	87.02	20.02
363+42.00	363+50.00	8.0	6.0	10.0	3.0	3.0	128.00	14.22	5.25	14.22	12.80	4.18	0.72
363+50.00	384+81.00	2131.0	6.0	10.0	3.0	3.0	34096.00	3788.44	5.25	3788.44	3409.60	1113.80	192.14
384+81.00	385+07.00	26.0	6.0-12.0	10.0	3.0	3.0	494.00	54.89	5.25	54.89	49.40	16.14	2.34
385+07.00	385+32.00	25.0	24.0	10.0	-	3.0	850.00	94.44	5.25	94.44	85.00	27.77	1.13
385+32.00	387+41.00	209.0	12.0	10.0	3.0	3.0	4598.00	510.89	5.25	510.89	459.80	150.20	18.84
387+41.00	388+56.00	115.0	12.0-6.0	10.0	3.0	3.0	2185.00	242.78	5.25	242.78	218.50	71.38	10.37
388+56.00	411+00.00	2244.0	6.0	10.0	3.0	3.0	35904.00	3989.33	5.25	3989.33	3590.40	1172.86	202.32
411+00.00	411+50.00	50.0	4.0	10.0	3.0	3.0	700.00	77.78	5.25	77.78	70.00	22.87	4.51
411+50.00	412+16.00	66.0	-	-	-	-	-	-	-				
412+16.00	414+33.00	217.0	4.0	4.0	3.0	3.0	1736.00	192.89	5.25	192.89	173.60	56.71	19.57
414+33.00	414+55.00	22.0	4.0	4.0	3.0	3.0	176.00	19.56	5.25	19.56	17.60	5.75	1.98
414+55.00	416+63.00	208.0	4.0-6.0	4.0-10.0	3.0	3.0	2496.00	277.33	5.25	277.33	249.60	81.54	18.75
416+63.00	416+85.00	22.0	6.0	10.0	3.0	3.0	352.00	39.11	5.25	39.11	35.20	11.50	1.98
416+85.00	423+14.66	629.7	6.0	10.0	3.0	3.0	10074.56	1119.40	5.25	1119.40	1007.46	329.10	56.77
423+14.66	423+29.66	15.0	6.0	10.0	3.0	3.0	240.00	26.67	4.88	26.67	24.00	7.28	1.35
423+29.66	423+59.66	30.0	6.0	10.0	3.0	3.0	480.00	53.33	3.75	53.33	36.00	11.20	2.70
423+59.66	423+89.66	30.0	6.0	10.0	3.0	3.0	480.00	53.33	3.00	53.33	36.00	8.96	2.70
423+89.66	424+93.91	104.3	BRIDGE OMISSION										
424+93.91	425+23.91	30.0	6.0	10.0	3.0	3.0	480.00	53.33	3.00	53.33	36.00	8.96	2.70
425+23.91	425+53.91	30.0	6.0	10.0	3.0	3.0	480.00	53.33	3.75	53.33	36.00	11.20	2.70
425+53.91	425+68.91	15.0	6.0	10.0	3.0	3.0	240.00	26.67	4.88	26.67	24.00	7.28	1.35
425+68.91	438+20.00	1251.1	6.0	10.0	3.0	3.0	20017.44	2224.16	5.25	2224.16	2001.74	653.90	112.80
438+20.00	438+33.00	13.0	6.0-12.0	10.0	3.0	3.0	247.00	27.44	5.25	27.44	24.70	8.07	1.17
438+33.00	438+58.00	25.0	24.0	10.0	-	3.0	850.00	94.44	5.25	94.44	85.00	27.77	1.13
438+58.00	440+67.00	209.0	12.0	10.0	3.0	3.0	4598.00	510.89	5.25	510.89	459.80	150.20	18.84
440+67.00	441+82.00	115.0	12.0-6.0	10.0	3.0	3.0	2185.00	242.78	5.25	242.78	218.50	71.38	10.37
441+82.00	464+31.00	2249.0	6.0	10.0	3.0	3.0	35984.00	3998.22	5.25	3998.22	3598.40	1175.48	202.77
464+31.00	464+86.00	55.0	4.0	10.0	3.0	3.0	770.00	85.56	5.25	85.56	77.00	25.15	4.96
464+86.00	465+52.00	66.0	-	-	-	-	-	-	-				
465+52.00	467+72.00	220.0	4.0	4.0	3.0	3.0	1760.00	195.56	5.25	195.56	176.00	57.49	19.84
467+72.00	467+84.00	12.0	4.0	4.0	3.0	3.0	96.00	10.67	5.25	10.67	9.60	3.14	1.08
467+84.00	470+02.00	218.0	4.0-6.0	4.0-10.0	3.0	3.0	2616.00	290.67	5.25	290.67	261.60	85.46	19.66
470+02.00	470+14.00	12.0	6.0	10.0	3.0	3.0	192.00	21.33	5.25	21.33	19.20	6.27	1.08
470+14.00	491+43.00	2129.0	6.0	10.0	3.0	3.0	34064.00	3784.89	5.25	3784.89	3406.40	1112.76	191.95

SHOULDERS-SOUTHBOUND US 51

STATIONING FROM	STATIONING TO	LENGTH (FOOT)	PL HMA SHOULDER WIDTH (FOOT)	DL HMA SHOULDER WIDTH (FOOT)	PL AGG. WEDGE SHOULDER WIDTH (FOOT)	DL AGG.WEDGE SHOULDER WIDTH (FOOT)	HMA SHOULDER AREA (SQ FT)	HMA SHOULDER AREA (SQ YD)	*** HOT-MIX ASPHALT SHOULDER THICKNESS (INCH)	HOT-MIX ASPHALT SURFACE REMOVAL, 1 1/2" (SQ YD)	BITUMINOUS MATERIALS (TACK COAT) (POUND)	HOT-MIX ASPHALT SHOULDERS (TON)	AGGREGATE WEDGE SHOULDER, TYPE B (TON)
SOUTHBOUND US 51													
491+43.00	491+69.00	26.0	6.0-12.0	10.0	3.0	3.0	494.00	54.89	5.25	54.89	49.40	16.14	2.34
491+69.00	491+94.00	25.0	24.0	10.0	-	3.0	850.00	94.44	5.25	94.44	85.00	27.77	1.13
491+94.00	494+03.00	209.0	12.0	10.0	3.0	3.0	4598.00	510.89	5.25	510.89	459.80	150.20	18.84
494+03.00	495+18.00	115.0	12.0-6.0	10.0	3.0	3.0	2185.00	242.78	5.25	242.78	218.50	71.38	10.37
495+18.00	517+60.00	2242.0	6.0	10.0	3.0	3.0	35872.00	3985.78	5.25	3985.78	3587.20	1171.82	202.14
517+60.00	518+17.00	57.0	4.0	10.0	3.0	3.0	798.00	88.67	5.25	88.67	79.80	26.07	5.14
518+17.00	518+83.00	66.0	-	-	-	-	-	-	-				
518+83.00	521+07.00	224.0	4.0	4.0	3.0	3.0	1792.00	199.11	5.25	199.11	179.20	58.54	20.20
521+07.00	521+15.00	8.0	4.0	4.0	3.0	3.0	64.00	7.11	5.25	7.11	6.40	2.09	0.72
521+15.00	523+37.00	222.0	4.0-6.0	4.0-10.0	3.0	3.0	2664.00	296.00	5.25	296.00	266.40	87.02	20.02
523+37.00	523+45.00	8.0	6.0	10.0	3.0	3.0	128.00	14.22	5.25	14.22	12.80	4.18	0.72
523+45.00	540+86.00	1741.0	6.0	10.0	3.0	3.0	27856.00	3095.11	5.25	3095.11	2785.60	909.96	156.97
540+86.00	541+15.00	29.0	6.0-12.0	10.0	3.0	3.0	551.00	61.22	5.25	61.22	55.10	18.00	2.61
541+15.00	541+39.00	24.0	24.0	10.0	3.0	3.0	816.00	90.67	5.25	90.67	81.60	26.66	2.16
541+39.00	543+43.00	204.0	12.0	10.0	3.0	3.0	4488.00	498.67	5.25	498.67	448.80	146.61	18.39
543+43.00	544+58.00	115.0	12.0-6.0	10.0	3.0	3.0	2185.00	242.78	5.25	242.78	218.50	71.38	10.37
544+58.00	570+94.00	2636.0	6.0	10.0	3.0	3.0	42176.00	4686.22	5.25	4686.22	4217.60	1377.75	237.67
570+94.00	571+52.00	58.0	4.0	10.0	3.0	3.0	812.00	90.22	5.25	90.22	81.20	26.53	5.23
571+52.00	572+18.00	66.0	-	-	-	-	-	-	-				
572+18.00	574+01.69	183.7	4.0	4.0	3.0	3.0	1469.52	163.28	5.25	163.28	146.95	48.00	16.56
STA EQU: 574+01.69 BK=174+89.59 AH													
174+89.59	175+28.00	38.4	4.0	4.0	3.0	3.0	307.28	34.14	5.25	34.14	30.73	10.04	3.46
175+28.00	175+36.00	8.0	4.0	4.0	3.0	3.0	64.00	7.11	5.25	7.11	6.40	2.09	0.72
175+36.00	177+63.00	227.0	4.0-6.0	4.0-10.0	3.0	3.0	2724.00	302.67	5.25	302.67	272.40	88.98	20.47
177+63.00	177+69.00	6.0	6.0	10.0	3.0	3.0	96.00	10.67	5.25	10.67	9.60	3.14	0.54
177+69.00	193+62.00	1593.0	6.0	10.0	3.0	3.0	25488.00	2832.00	5.25	2832.00	2548.80	832.61	143.63
193+62.00	194+16.00	54.0	4.0	10.0	3.0	3.0	756.00	84.00	5.25	84.00	75.60	24.70	4.87
194+16.00	194+81.00	65.0	-	10.0	-	3.0	650.00	72.22	5.25	72.22	65.00	21.23	2.93
194+81.00	195+15.00	34.0	4.0	10.0	3.0	3.0	476.00	52.89	5.25	52.89	47.60	15.55	3.07
195+16.00	198+16.00	300.0	4.0	10.0	3.0	3.0	4200.00	466.67	5.25	466.67	420.00	137.20	27.05
198+16.00	201+17.00	301.0	4.0	10.0	3.0	3.0	4214.00	468.22	5.25	468.22	421.40	137.66	27.14
201+17.00	219+38.00	1821.0	6.0	10.0	3.0	3.0	29136.00	3237.33	5.25	3237.33	2913.60	951.78	164.19
219+38.00	219+75.00	37.0	6.0-12.0	10.0	3.0	3.0	703.00	78.11	5.25	78.11	70.30	22.96	3.34
219+75.00	219+99.00	24.0	24.0	10.0	-	3.0	816.00	90.67	5.25	90.67	81.60	26.66	1.08
219+99.00	222+05.00	206.0	12.0	10.0	3.0	3.0	4532.00	503.56	5.25	503.56	453.20	148.05	18.57
222+05.00	224+33.00	228.0	12.0-6.0	10.0	3.0	3.0	4332.00	481.33	5.25	481.33	433.20	141.51	20.56
224+33.00	232+48.00	815.0	6.0	10.0	3.0	3.0	13040.00	1448.89	5.25	1448.89	1304.00	425.97	73.48
232+48.00	233+00.00	52.0	4.0	-	3.0	-	208.00	23.11	5.25	23.11	20.80	6.79	2.34
233+00.00	233+58.00	58.0	-	-	-	-	-	-	-				
233+58.00	234+39.00	81.0	4.0	-	3.0	-	324.00	36.00	5.25	36.00	32.40	10.58	3.65
234+39.00	236+96.00	257.0	4.0	4.0	3.0	3.0	2056.00	228.44	5.25	228.44	205.60	67.16	23.17
236+96.00	237+56.00	60.0	4.0	4.0	3.0	3.0	480.00	53.33	5.25	53.33	48.00	15.68	5.41
237+56.00	239+96.00	240.0	4.0-6.0	4.0-10.0	3.0	3.0	2880.00	320.00	5.25	320.00	288.00	94.08	21.64
239+96.00	240+56.00	60.0	6.0	10.0	3.0	3.0	960.00	106.67	5.25	106.67	96.00	31.36	5.41
240+56.00	253+64.00	1308.0	6.0	10.0	3.0	3.0	20928.00	2325.33	5.25	2325.33	2092.80	683.65	117.93
253+64.00	254+01.00	37.0	6.0-12.0	10.0	3.0	3.0	703.00	78.11	5.25	78.11	70.30	22.96	3.34
254+01.00	254+26.00	25.0	24.0	10.0	3.0	3.0	850.00	94.44	5.25	94.44	85.00	27.77	2.25
254+26.00	256+32.00	206.0	12.0	10.0	3.0	3.0	4532.00	503.56	5.25	503.56	453.20	148.05	18.57
256+32.00	258+63.00	231.0	12.0-6.0	10.0	3.0	3.0	4389.00	487.67	5.25	487.67	438.90	143.37	20.83
258+63.00	261+08.97	246.0	6.0	10.0	3.0	3.0	3935.52	437.28	5.25	437.28	393.55	128.56	22.18
261+08.97	261+23.97	15.0	6.0	10.0	3.0	3.0	240.00	26.67	4.88	26.67	24.00	7.28	1.35
261+23.97	261+53.97	30.0	6.0	10.0	3.0	3.0	480.00	53.33	3.75	53.33	36.00	11.20	2.70
261+53.97	261+83.97	30.0	6.0	10.0	3.0	3.0	480.00	53.33	3.00	53.33	36.00	8.96	2.70
261+83.97	262+75.14	91.2	BRIDGE OMISSION										
262+75.14	263+05.14	30.0	6.0	10.0	3.0	3.0	480.00	53.33	3.00	53.33	36.00	8.96	2.70
263+05.14	263+35.14	30.0	6.0	10.0	3.0	3.0	480.00	53.33	3.75	53.33	36.00	11.20	2.70
263+35.14	263+50.14	15.0	6.0	10.0	3.0	3.0	240.00	26.67	4.88	26.67	24.00	7.28	1.35
263+50.14	286+15.00	2264.9	6.0	10.0	3.0	3.0	36237.76	4026.42	5.25	4026.42	3623.78	1183.77	204.20
286+15.00	286+68.00	53.0	4.0	10.0	3.0	3.0	742.00	82.44	5.25	82.44	74.20	24.24	4.78
286+68.00	287+32.00	64.0	-	-	-	-	-	-	-				
287+32.00	287+76.00	44.0	4.0	4.0	3.0	3.0	352.00	39.11	5.25	39.11	35.20	11.50	3.97
287+76.00	287+91.00	15.0	4.0	4.0	3.0	3.0	120.00	13.33	4.88	13.33	12.00	3.64	1.35
287+91.00	288+21.00	30.0	4.0	4.0	3.0	3.0	240.00	26.67	3.75	26.67	18.00	5.60	2.70
288+21.00	288+51.00	30.0	4.0	4.0	3.0	3.0	240.00	26.67	3.00	26.67	18.00	4.48	2.70
RURAL									TOTAL =	70741	63559	20745	3614

***SEE TYPICAL CROSS SECTIONS FOR INDIVIDUAL HMA SHOULDER LIFTS

US 51 PAVING SUMMARY

US 51	HOT-MIX ASPHALT SURFACE REMOVAL, 1 1/2" (SQ YD)	PORTLAND CEMENT CONCRETE SURFACE REMOVAL-BUTT JOINT (SQ YD)	BITUMINOUS MATERIALS (TACK COAT) (POUND)	POLYMERIZED HOT-MIX ASPHALT BINDER COURSE, IL-9.5FG, N90 (TON)	POLYMERIZED HOT-MIX ASPHALT SURFACE COURSE, IL-9.5, MIX "D", N90 (TON)	HOT-MIX ASPHALT SHOULDERS (TON)	AGGREGATE WEDGE SHOULDER, TYPE B (TON)
URBAN PROJECT TOTAL =	4535	267	8436	617	740	1310	224
RURAL PROJECT TOTAL =	181627	1387	282768	23352	26874	39282	6826
PROJECT TOTAL =	186162	1654	291204	23969	27614	40592	7050

LONGITUDINAL JOINT SEALANT

STATIONING FROM	STATIONING TO	LENGTH (FOOT)	# OF JOINTS (EACH)	LONGITUDINAL JOINT SEALANT (FOOT)
NORTHBOUND US 51				
265+10.00	273+82.08	872.08	1	872.08
STA EQU: 273+82.08 BK= 273+79.78 AH				
273+79.78	277+50.65	370.87	1	370.87
URBAN			TOTAL =	1243
277+50.65	300+15.00	2264.35	1	2264.35
300+15.00	304+59.00	444.00	2	888.00
304+59.00	325+88.00	2129.00	1	2129.00
325+88.00	331+30.00	542.00	2	1084.00
331+30.00	353+68.00	2238.00	1	2238.00
353+68.00	357+93.80	425.80	3	1277.40
STA EQU: 357+93.80 BK=357+91.02 AH				
357+91.02	358+13.00	21.98	3	65.94
358+13.00	406+83.00	4870.00	1	4870.00
406+83.00	411+25.00	442.00	3	1326.00
411+25.00	424+50.07	1325.07	1	1325.07
424+50.07	425+54.32	104.25	BRIDGE OMISSION	
425+54.32	460+34.00	3479.68	1	3479.68
460+34.00	464+68.00	434.00	3	1302.00
464+68.00	513+63.00	4895.00	1	4895.00
513+63.00	517+99.00	436.00	3	1308.00
517+99.00	567+20.00	4921.00	1	4921.00
567+20.00	571+33.00	413.00	3	1239.00
571+33.00	574+01.69	268.69	1	268.69
STA EQU: 574+01.69 BK=174+89.59 AH				
174+89.59	187+58.00	1268.41	1	1268.41
187+58.00	193+61.00	603.00	2	1206.00
193+61.00	226+63.00	3302.00	1	3302.00
226+63.00	232+19.00	556.00	3	1668.00
232+19.00	232+81.00	62.00	2	124.00
232+81.00	262+10.18	2929.18	1	2929.18
262+10.18	263+01.35	91.17	BRIDGE OMISSION	
263+01.35	282+17.00	1915.65	1	1915.65
282+17.00	286+45.00	428.00	3	1284.00
286+45.00	288+51.00	206.00	1	206.00
RURAL			TOTAL =	48784
SOUTHBOUND US 51				
265+10.00	273+82.08	872.08	1	872.08
STA EQU: 273+82.08 BK= 273+79.78 AH				
273+79.78	277+50.65	370.87	1	370.87
URBAN			TOTAL =	1243
277+50.65	305+63.00	2812.35	1	2812.35
305+63.00	310+07.00	444.00	2	888.00
310+07.00	332+76.00	2269.00	1	2269.00
332+76.00	339+06.00	630.00	2	1260.00
339+06.00	357+93.80	1887.80	1	1887.80
STA EQU: 357+93.80 BK=357+91.02 AH				
357+91.02	359+06.00	114.98	1	114.98
359+06.00	363+42.00	436.00	3	1308.00
363+42.00	412+42.00	4900.00	1	4900.00
412+42.00	416+63.00	421.00	3	1263.00
416+63.00	423+89.66	726.66	1	726.66
423+89.66	424+93.91	104.25	BRIDGE OMISSION	
424+93.91	465+70.00	4076.09	1	4076.09
465+70.00	470+02.00	432.00	3	1296.00
470+02.00	519+01.00	4899.00	1	4899.00
519+01.00	523+37.00	436.00	3	1308.00
523+37.00	572+35.00	4898.00	1	4898.00
572+35.00	574+01.69	166.69	3	500.07
STA EQU: 574+01.69 BK=174+89.59 AH				
174+89.59	177+63.00	273.41	3	820.23
177+63.00	195+01.00	1738.00	1	1738.00
195+01.00	201+17.00	616.00	2	1232.00
201+17.00	233+77.00	3260.00	1	3260.00
233+77.00	234+39.00	62.00	2	124.00
234+39.00	239+96.00	557.00	3	1671.00
239+96.00	261+83.97	2187.97	1	2187.97
261+83.97	262+75.14	91.17	BRIDGE OMISSION	
262+75.14	287+55.00	2479.86	1	2479.86
287+55.00	288+51.00	96.00	3	288.00
RURAL			TOTAL =	48208
			URBAN PROJECT TOTAL =	2486
			RURAL PROJECT TOTAL =	96992
			PROJECT TOTAL =	99478

SHORT TERM PAVEMENT MARKING

STATIONING FROM	STATIONING TO	LENGTH (FOOT)	CENTERLINE (FOOT)	PASSING LANE SHOULDER EDGE LINE (FOOT)	DRIVING LANE SHOULDER EDGE LINE (FOOT)	TURNLANE & ARROWS (FOOT)	NUMBER OF APPLICATIONS (EACH)	SHORT TERM PAVEMENT MARKING (FOOT)	SHORT TERM PAVEMENT MARKING REMOVAL (SQ FT)
NORTHBOUND US 51									
265+10.00	273+82.08	872.08	87.21	17.44	17.44		2	244.18	81.39
STA EQU: 273+82.08 BK=273+79.78 AH									
273+79.78	277+50.65	370.87	37.09	7.42	7.42		2	103.84	34.61
URBAN							TOTAL =	348	116
277+50.65	300+15.00	2264.35	226.44	45.29	45.29		2	634.02	211.34
300+15.00	302+45.00	230.00	23.00		4.60		2	55.20	18.40
302+45.00	304+59.00	214.00	21.40		4.20	51.8	2	154.96	51.65
304+59.00	305+90.00	131.00	13.10		2.62		2	31.44	10.48
305+90.00	324+88.00	1898.00	189.80	37.96	37.96		2	531.44	177.15
324+88.00	328+13.00	325.00	32.50	6.5			2	78.00	26.00
328+13.00	331+49.00	336.00	33.60	6.72		79.2	2	239.04	79.68
331+49.00	333+51.00	202.00	20.20				2	40.40	13.47
333+51.00	353+60.00	2009.00	200.90	40.18	40.18		2	562.52	187.51
353+60.00	355+90.00	230.00	23.00				2	46.00	15.33
355+90.00	357+93.80	203.80	20.38			101.56	2	243.88	81.29
STA EQU: 357+93.80 BK=357+91.02 AH									
357+91.02	359+45.00	153.98	15.40				2	30.80	10.27
359+45.00	406+81.00	4736.00	473.60	94.72	94.72		2	1326.08	442.03
406+81.00	409+33.00	252.00	25.20				2	50.40	16.80
409+33.00	411+25.00	192.00	19.20			99.20	2	236.80	78.93
411+25.00	412+66.00	141.00	14.10				2	28.20	9.40
412+66.00	424+50.07	1184.07	118.41	23.68	23.68		2	331.54	110.51
424+50.07	425+54.32	104.25	BRIDGE OMISSION						
425+54.32	434+02.00	847.68	84.77	16.95	16.95		2	237.35	79.12
434+02.00	460+24.00	2622.00	262.20	52.44	52.44		3	1101.24	367.08
460+24.00	462+64.00	240.00	24.00				3	72.00	24.00
462+64.00	464+68.00	204.00	20.40			64.88	3	255.84	85.28
464+68.00	466+09.00	141.00	14.10				3	42.30	14.10
466+09.00	513+55.00	4746.00	474.60	94.92	94.92		3	1993.32	664.44
513+55.00	515+93.00	238.00	23.80				3	71.40	23.80
515+93.00	517+99.00	206.00	20.60			102.00	3	367.80	122.60
517+99.00	519+40.00	141.00	14.10				3	42.30	14.10
519+40.00	566+89.00	4749.00	474.90	94.98	94.98		3	1994.58	664.86
566+89.00	569+27.00	238.00	23.80				3	71.40	23.80
569+27.00	571+33.00	206.00	20.60			64.92	3	256.56	85.52
571+33.00	572+74.00	141.00	14.10				3	42.30	14.10
572+74.00	574+01.69	127.69	12.77	2.55	2.55		2	35.75	11.92
STA EQU: 574+01.69 BK=174+89.59 AH									
174+89.59	187+58.00	1268.41	126.84	25.37	25.37		2	355.15	118.38
187+58.00	190+53.00	295.00	29.50	5.90			2	70.80	23.60
190+53.00	193+89.00	336.00	33.60	6.72		79.2	2	239.04	79.68
193+89.00	195+40.00	151.00	15.10				2	30.20	10.07
195+40.00	226+40.00	3100.00	310.00	62.00	62.00		2	868.00	289.33
226+40.00	229+63.00	323.00	32.30				2	64.60	21.53
229+63.00	232+81.00	318.00	31.80			154.80	2	373.20	124.40
232+81.00	234+20.00	139.00	13.90				2	27.80	9.27
234+20.00	262+10.18	2790.18	279.02	55.80	55.80		2	701.25	260.42
262+10.18	263+01.35	91.17	BRIDGE OMISSION						
263+01.35	282+17.00	1915.65	191.57	38.31	38.31		2	536.38	178.79
282+17.00	284+47.00	230.00	23.00				2	46.00	15.33
284+47.00	286+45.00	198.00	19.80			100.40	2	240.40	80.13
286+45.00	287+86.00	141.00	14.10				2	28.20	9.40
287+86.00	288+51.00	65.00	6.50	1.30	1.30		2	18.20	6.07
RURAL							TOTAL =	14884	4961
SOUTHBOUND US 51									
265+10.00	273+82.08	872.08	87.21	17.44	17.44		2	244.18	81.39
STA EQU: 273+82.08 BK=273+79.78 AH									
273+79.78	277+50.65	370.87	37.09	7.42	7.42		2	103.84	34.61
URBAN							TOTAL =	348	116
277+60.65	304+18.00	2657.35	265.74	53.15	53.15		2	744.06	248.02
304+18.00	305+43.00	125.00	12.50				2	25.00	8.33
305+43.00	307+77.00	234.00	23.40	4.68		53.80	2	163.76	54.59
307+77.00	310+07.00	230.00	23.00	4.60			2	55.20	18.40
310+07.00	330+74.00	2067.00	206.70	41.34	41.34		2	570.76	192.92
330+74.00	332+76.00	202.00	20.20		4.04		2	48.48	16.16
332+76.00	335+42.00	266.00	26.60	5.32	5.32	72.20	2	218.88	72.96
335+42.00	357+93.80	2251.80	225.18	45.04	45.04		2	630.50	210.17
STA EQU: 357+93.80 BK=357+91.02 AH									
357+91.02	359+06.00	114.98	11.50				2	23.00	7.67
359+06.00	361+12.00	206.00	20.60			102.00	2	245.20	81.73
361+12.00	363+50.00	238.00	23.80				2	47.60	15.87
363+50.00	411+00.00	4750.00	475.00	95.00	95.00		2	1330.00	443.33
411+00.00	412+16.00	116.00	11.60				2	23.20	7.73
412+16.00	414+33.00	217.00	21.70			104.20	2	251.80	83.93
414+33.00	416+45.00	212.00	21.20				2	42.40	14.13
416+45.00	423+89.66	744.66	74.47	14.89	14.89		2	208.50	69.50
423+89.66	424+93.91	104.25	BRIDGE OMISSION						
424+93.91	464+29.00	3935.09	393.51	78.70	78.70		2	1101.83	367.28
464+29.00	465+70.00	141.00	14.10				2	28.20	9.40
465+70.00	467+72.00	202.00	20.20			101.20	2	242.80	80.93
467+72.00	470+14.00	242.00	24.20				2	48.40	16.13
470+14.00	517+60.00	4746.00	474.60	94.92	94.92		2	1328.88	442.96
517+60.00	519+01.00	141.00	14.10				2	28.20	9.40
519+01.00	521+07.00	206.00	20.60			102.00	2	245.20	81.73
521+07.00	523+45.00	238.00	23.80				2	47.60	15.87
523+45.00	570+95.00	4750.00	475.00	95.00	95.00		2	1330.00	443.33
570+95.00	572+35.00	140.00	14.00				2	28.00	9.33
572+35.00	574+01.69	166.69	16.67			63.74	2	160.81	53.60
STA EQU: 574+01.69 BK=174+89.59 AH									
174+89.59	175+29.00	39.41	3.94			38.28	2	84.45	28.15
175+29.00	177+69.00	240.00	24.00				2	48.00	16.00
177+69.00	193+62.00	1593.00	159.30	31.86	31.86		2	446.04	148.68
193+62.00	195+01.00	139.00	13.90		2.78		2	33.36	11.12
195+01.00	198+16.00	315.00	31.50		6.30	77.10	2	229.80	76.60
198+16.00	201+17.00	301.00	30.10		6.02		2	72.24	24.08
201+17.00	232+25.00	3108.00	310.80	62.16	62.16		2	870.24	290.08
232+25.00	233+77.00	152.00	15.20				2	30.40	10.13
233+77.00	236+96.00	319.00	31.90			155.00	2	373.80	124.60
236+96.00	239+96.00	300.00	30.00				2	60.00	20.00
239+96.00	261+83.97	2187.97	218.80	43.76	43.76		2	612.63	204.21
261+83.97	262+75.14	91.17	BRIDGE OMISSION						
262+75.14	286+15.00	2339.86	233.99	46.80	46.80		2	655.16	218.39
286+15.00	287+55.00	140.00	14.00				2	28.00	9.33
287+55.00	288+51.00	96.00	9.60			49.60	2	118.40	39.47
RURAL							TOTAL =	12889	4296
							URBAN PROJECT TOTAL =	696	232
							RURAL PROJECT TOTAL =	27773	9257
							PROJECT TOTAL =	28469	9489

MODEL: Default
FILE NAME: pw:\\ildot-pw.bentley.com:PWIDOT\Documents\IDOT Offices\District 7\Projects\74800\CADData\CADsheets\0774800-sht-schedule.dgn

USER NAME = Mona,Steffen	DESIGNED -	REVISED -	
	DRAWN -	REVISED -	
PLOT SCALE = 100.0000 ' / in.	CHECKED -	REVISED -	
PLOT DATE = 4/6/2023	DATE -	REVISED -	

STATE OF ILLINOIS
DEPARTMENT OF TRANSPORTATION

SCHEDULE OF QUANTITIES

SCALE: | SHEET 15 OF 29 SHEETS | STA. TO STA.

F.A.P RTE.	SECTION	COUNTY	TOTAL SHEETS	SHEET NO.
322	50,51,52 RS-3	MACON	79	25
		CONTRACT NO. 74800		
		ILLINOIS FED. AID PROJECT		

ENTRANCE

STATION	ENTRANCE TYPE	MATERIAL TYPE	W1 (FOOT)	W2 (FOOT)	LENGTH (FOOT)	NUMBER OF RAMPS (EACH)	AREA (SQ YD)	SURFACE REMOVAL, VARIBLE DEPTH (SPECIAL) (SQ YD)	INCIDENTAL HOT-MIX ASPHALT SURFACING (TON)	AGGREGATE SURFACE COURSE, TYPE B (TON)	TEMPORARY RAMP (SPECIAL) (SQ YD)
NORTHBOUND US 51											
285+16.00	FE	AGG	27	11	7	2	14.78			1.79	12.00
295+85.00	PE	HMA	27	15	10	2	23.33	23.33	3.43		12.00
305+10.00	FE	AGG	22	12	7	2	13.22			1.60	9.78
322+17.00	PE	AGG	45	19	7	2	24.89			3.01	20.00
325+06.00	PE	HMA	30	17	10	2	26.11	26.11	3.84		13.33
327+10.00	PE	HMA	20	18	10	2	21.11	21.11	3.10		8.89
332+07.00	PRA	HMA	174	60	55	4	715.00	715.00	105.11		154.67
343+84.00	PE	HMA	36	21	10	2	31.67	31.67	4.66		16.00
345+36.00	FE	AGG	40	30	7	2	27.22			3.29	17.78
352+97.00	PE	HMA	21	15	10	2	20.00	20.00	2.94		9.33
358+55.00	PRA	HMA	84	42	28	4	196.00	196.00	28.81		74.67
367+12.00	PE	HMA	28	15	10	2	23.89	23.89	3.51		12.44
370+34.00	PE	HMA	40	22	10	2	34.44	34.44	5.06		17.78
385+17.00	FE	AGG	33	22	7	2	21.39			2.59	14.67
395+75.00	FE	HMA	20	13	10	2	18.33	18.33	2.70		8.89
411+90.00	PRA	HMA	90	29	42	4	277.67	277.67	40.82		80.00
430+40.00	FE	AGG	30	18	7	2	18.67			2.26	13.33
446+50.00	FE	AGG	30	20	7	1	19.44			2.35	6.67
449+33.00	FE	HMA	26	14	10	1	22.22	22.22	3.27		5.78
465+19.00	PRA	HMA	68	35	29	4	165.94	165.94	24.39		60.44
491+80.00	FE	AGG	19	18	7	1	14.39			1.74	4.22
518+50.00	PRA	HMA	71	30	27	4	151.50	151.50	22.27		63.11
541+26.00	FE	AGG	32	27	7	1	22.94			2.78	7.11
556+20.00	PE	HMA	41	24	10	1	36.11	36.11	5.31		9.11
562+55.00	FE	AGG	30	22	7	1	20.22			2.45	6.67
571+84.00	PRA	HMA	72	26	25	4	136.11	136.11	20.01		64.00
194+48.00	PRA	HMA	193	56	56	4	774.67	774.67	113.88		171.56
219+70.00	FE	AGG	30	18	7	2	18.67			2.26	13.33
233+29.00	PRA	HMA	218	68	54	4	858.00	858.00	126.13		193.78
254+13.00	FE	AGG	33	16	7	2	19.06			2.31	14.67
287+05.00	PRA	HMA	103	40	32	4	254.22	254.22	37.37		91.56
RURAL TOTAL =								3786	557	28	1208
SOUTHBOUND US 51											
279+87.00	PE	HMA	29	14	10	2	23.89	23.89	3.51		12.89
285+16.00	FE	AGG	26	18	7	2	17.11			2.07	11.56
295+71.00	PE	HMA	22	16	10	2	21.11	21.11	3.10		9.78
305+10.00	PRA	HMA	83	31	40	4	253.33	253.33	37.24		73.78
321+28.00	PE	HMA	23	15	10	2	21.11	21.11	3.10		10.22
327+74.00	PE	HMA	26	15	10	2	22.78	22.78	3.35		11.56
333+65.00	PE	HMA	24	15	10	2	21.67	21.67	3.19		10.67
345+02.00	FE	AGG	26	20	7	2	17.89			2.16	11.56
353+00.00	FE	HMA	23	17	10	2	22.22	22.22	3.27		10.22
358+55.00	PRA	HMA	82	38	32	4	213.33	213.33	31.36		72.89
366+82.00	PE	HMA	30	15	10	2	25.00	25.00	3.68		13.33
375+20.00	FE	AGG	18	16	7	2	13.22			1.60	8.00
385+17.00	FE	AGG	21	12	7	2	12.83			1.55	9.33
411+76.00	PRA	HMA	84	44	27	4	192.00	192.00	28.22		74.67
425+99.00	PE	HMA	33	24	10	2	31.67	31.67	4.66		14.67
429+84.00	PE	HMA	24	17	10	2	22.78	22.78	3.35		10.67
446+99.00	FE	HMA	26	18	10	2	24.44	24.44	3.59		11.56
465+19.00	PRA	HMA	81	41	29	4	196.56	196.56	28.89		72.00
472+81.00	FE	HMA	20	14	10	2	18.89	18.89	2.78		8.89
514+22.00	PE	AGG	30	12	7	2	16.33			1.98	13.33
518+50.00	PRA	HMA	89	41	29	4	209.44	209.44	30.79		79.11
531+04.00	FE	AGG	25	17	7	2	16.33			1.98	11.11
541+26.00	FE	AGG	26	18	7	2	17.11			2.07	11.56
565+73.00	PE	HMA	32	15	10	2	26.11	26.11	3.84		14.22
571+84.00	PRA	HMA	95	35	30	4	216.67	216.67	31.85		84.44
194+51.00	FE	HMA	15	12	10	2	15.00	15.00	2.21		6.67
220+20.00	FE	AGG	34	22	7	2	21.78			2.64	15.11
233+29.00	PRA	HMA	207	72	52	4	806.00	806.00	118.48		184.00
254+20.00	FE	AGG	30	14	7	2	17.11			2.07	13.33
266+78.00	FE	AGG	29	16	7	2	17.50			2.12	12.89
275+00.00	FE	AGG	26	12	7	2	14.78			1.79	11.56
287+05.00	PRA	HMA	108	40	34	4	279.56	279.56	41.09		96.00
RURAL TOTAL =								2664	392	22	1012
PROJECT TOTAL =								6450	949	50	2220

SHOULDER RUMBLE STRIPS

STATIONING FROM	STATIONING TO	LENGTH (FOOT)	DRIVING LANE SHOULDER (FOOT)	PASSING LANE SHOULDER (FOOT)	ENTRANCE OMISSION (FOOT)	SHOULDER RUMBLE STRIPS, 16 INCH (FOOT)
NORTHBOUND US 51						
265+10.00	273+82.08	872.08	872.08	872.08		1744.16
STA EQU: 273+82.08 BK= 273+79.78 AH						
273+79.78	277+50.65	370.87	370.87	370.87		741.74
URBAN					TOTAL =	**2486**
277+50.65	300+15.00	2264.35	2264.35	2264.35	27.00	4501.70
300+15.00	305+90.00	575.00	575.00			575.00
305+90.00	324+75.00	1885.00	1885.00	1885.00	45.00	3725.00
324+75.00	331+80.00	705.00		705.00		705.00
331+80.00	333+61.00	181.00				
333+61.00	353+60.00	1999.00	1999.00	1999.00	57.00	3941.00
353+60.00	357+93.80	433.80				
STA EQU: 357+93.80 BK=357+91.02 AH						
357+91.02	359+12.00	120.98				
359+12.00	359+45.00	33.00	33.00			
359+45.00	406+81.00	4736.00	4736.00	4736.00	68.00	9404.00
406+81.00	412+48.00	567.00				
412+48.00	412+66.00	18.00	18.00			18.00
412+66.00	424+50.07	1184.07	1184.07	1184.07		2368.14
424+50.07	425+54.32	104.25	BRIDGE OMISSION			
425+54.32	460+24.00	3469.68	3469.68	3469.68		6939.36
460+24.00	466+09.00	585.00				
466+09.00	513+55.00	4746.00	4746.00	4746.00		9492.00
513+55.00	519+40.00	585.00				
519+40.00	566+89.00	4749.00	4749.00	4749.00	41.00	9457.00
566+89.00	572+74.00	585.00				
572+74.00	574+01.69	127.69	127.69	127.69		255.38
STA EQU: 574+01.69 BK=174+89.59 AH						
174+89.59	187+58.00	1268.41	1268.41	1268.41		2536.82
187+58.00	193+77.00	619.00		619.00		619.00
193+77.00	195+40.00	163.00				
195+40.00	195+84.00	44.00		44.00		44.00
195+84.00	226+02.00	3018.00	3018.00	3018.00		6036.00
226+02.00	226+63.00	61.00		61.00		61.00
226+63.00	234+10.00	747.00				
234+10.00	234+57.00	47.00		47.00		47.00
234+57.00	262+10.18	2753.18	2753.18	2753.18		5506.36
262+10.18	263+01.35	91.17	BRIDGE OMISSION			
263+01.35	282+00.00	1898.65	1898.65	1898.65		3797.30
282+00.00	287+86.00	586.00				
287+86.00	288+51.00	65.00	65.00	65.00		130.00
RURAL					TOTAL =	**70159**
SOUTHBOUND US 51						
265+10.00	273+82.08	872.08	872.08	872.08		1744.16
STA EQU: 273+82.08 BK= 273+79.78 AH						
273+79.78	277+50.65	370.87	370.87	370.87		741.74
URBAN					TOTAL =	**2486**
277+50.65	304+18.00	2667.35	2667.35	2667.35	51.00	5283.70
304+18.00	305+44.00	126.00				
305+44.00	310+07.00	463.00		463.00		463.00
310+07.00	330+74.00	2067.00	2067.00	2067.00	49.00	4085.00
330+74.00	339+06.00	832.00	832.00		24.00	808.00
339+06.00	357+67.00	1861.00	1861.00	1861.00		3722.00
357+67.00	357+93.80	26.80				
STA EQU: 357+93.80 BK=357+91.02 AH						
357+91.02	363+50.00	558.98				
363+50.00	411+00.00	4750.00	4750.00	4750.00	30.00	9470.00
411+00.00	416+85.00	585.00				
416+85.00	423+89.66	704.66	704.66	704.66		1409.32
423+89.66	424+93.91	104.25	BRIDGE OMISSION			
424+93.91	464+29.00	3935.09	3935.09	3935.09	57.00	7813.18
464+29.00	470+14.00	585.00				
470+14.00	517+60.00	4746.00	4746.00	4746.00	30.00	9462.00
517+60.00	523+45.00	585.00				
523+45.00	570+94.00	4749.00	4749.00	4749.00	32.00	9466.00
570+94.00	574+01.69	307.69				
STA EQU: 574+01.69 BK=174+89.59 AH						
174+89.59	177+69.00	279.41				
177+69.00	193+62.00	1593.00	1593.00	1593.00		3186.00
193+62.00	201+17.00	755.00	755.00			755.00
201+17.00	232+00.00	3083.00	3083.00	3083.00		6166.00
232+00.00	232+44.00	44.00		44.00		44.00
232+44.00	239+96.00	752.00				
239+96.00	240+56.00	60.00		60.00		60.00
240+56.00	261+83.97	2127.97	2127.97	2127.97		4255.94
261+83.97	262+75.14	91.17	BRIDGE OMISSION			
262+75.14	286+15.00	2339.86	2339.86	2339.86		4679.72
286+15.00	288+51.00	236.00				
RURAL					TOTAL =	**71129**
					URBAN PROJECT TOTAL =	**4972**
					RURAL PROJECT TOTAL =	**141288**
					PROJECT TOTAL =	**146260**

US 51 NORTHBOUND UNDERDRAINS SCHEDULE

PIPE UNDERDRAINS						PIPE UNDERDRAIN OUTLETS							
LOCATION			SIDE	SHOULDER REMOVAL AND REPLACEMENT (FOOT)	PIPE UNDERDRAINS 6" (MODIFIED) (FOOT)	OUTLET STATION	SHOULDER REMOVAL AND REPLACEMENT (FOOT)	PIPE UNDERDRAINS 6" (SPECIAL) (FOOT)	CLASS SI CONCRETE (MISC) (CU YD)	REINFORCEMENT BARS (POUND)	CONCRETE HEADWALL REMOVAL SPECIAL (EACH)	RODENT SHIELD (EACH)	
US-51 NORTHBOUND			IN/OUT										
306+00	TO	309+68	OUT	368	368	309+68	10	44	1.5	35.6	1	2	**
306+00	TO	309+68	IN	368	368	309+68	6	32	1.5	35.6	1	2	**
309+68	TO	314+00	OUT	432	432	314+00	10	24	1.5	35.6	1	1	
309+68	TO	314+00	IN	432	432	314+00	6	16	1.5	35.6	1	1	
314+00	TO	319+00	OUT	500	500	319+00	10	22	1.5	35.6	1	1	
314+00	TO	319+00	IN	500	500	319+00	6	16	1.5	35.6	1	1	
319+00	TO	324+00	OUT	500	500								
319+00	TO	324+00	IN	500	500								
324+00	TO	328+00	OUT	400	400	328+00	4	18	1.5	35.6	1@329+00	1	
324+00	TO	328+00	IN	400	400	328+00	6	18	1.5	35.6	1@329+00	1	
328+00	TO	331+00	OUT	300	300	331+00	4	18	1.5	35.6	-	1	
328+00	TO	331+00	IN	300	300	331+00	12	18	1.5	35.6	-	1	
331+00	TO	333+60	OUT	OMISSION									
331+00	TO	333+60	IN	OMISSION									
333+60	TO	339+00	OUT	540	540	339+00	10	40	1.5	35.6	1	2	**
333+60	TO	338+85	IN	525	525	338+85	6	42	-	-	1@334+00	2	*&**
339+00	TO	344+50	OUT	550	550	344+50	10	21	1.5	35.6	1	1	
338+85	TO	346+00	IN	715	715	346+00	6	18	1.5	35.6	1	1	
344+50	TO	349+00	OUT	450	450	349+00	10	20	1.5	35.6	1	1	
346+00	TO	349+00	IN	300	300	349+00	6	17	1.5	35.6	1	1	
349+00	TO	354+00	OUT	500	500								
349+00	TO	354+00	IN	500	500								
354+00	TO	357+89	OUT	389	389	357+89	4	18	1.5	35.6	1	1	
354+00	TO	357+80	IN	380	380	357+80	4	15	1.5	35.6	-	1	
357+80	TO	359+16	IN	OMISSION									
357+89	TO	359+16	OUT	OMISSION		359+16	10	21	1.5	35.6	1	1	
359+16	TO	360+00	IN	84	84	360+00	6	26	1.5	35.6	1	2	**
359+16	TO	364+00	OUT	484	484	364+00	10	22	1.5	35.6	1	1	
360+00	TO	366+00	IN	600	600	366+00	6	18	1.5	35.6	1	1	
364+00	TO	371+00	OUT	700	700	371+00	10	22	1.5	35.6	1	1	
366+00	TO	371+00	IN	500	500	371+00	6	16	1.5	35.6	1	1	
371+00	TO	376+00	OUT	500	500	376+00	10	22	1.5	35.6	1	1	
371+00	TO	376+00	IN	500	500	376+00	6	16	1.5	35.6	1	1	
376+00	TO	381+00	OUT	500	500	381+00	10	20	1.5	35.6	1	1	
376+00	TO	381+00	IN	500	500	381+00	6	16	1.5	35.6	1	1	
381+00	TO	387+00	IN	600	600	387+00	6	18	1.5	35.6	1	1	
381+00	TO	387+14	OUT	614	614	387+14	10	20	1.5	35.6	1	1	
387+00	TO	392+00	IN	500	500	392+00	6	18	1.5	35.6	1	1	
387+14	TO	392+00	OUT	486	486	392+00	10	22	1.5	35.6	1	1	
392+00	TO	397+00	IN	500	500								
392+00	TO	397+00	OUT	500	500								
397+00	TO	402+50	IN	550	550	402+50	6	16	1.5	35.6	1	1	
397+00	TO	402+50	OUT	550	550	402+50	10	22	1.5	35.6	1	1	
402+50	TO	407+50	IN	500	500	407+50	6	16	1.5	35.6	1	1	
402+50	TO	407+50	OUT	500	500	407+50	10	22	1.5	35.6	1	1	
407+50	TO	411+00	IN	350	350	411+00	4	13	1.5	35.6	1	1	
407+50	TO	411+12	OUT	362	362	411+12	4	18	1.5	35.6	1	1	
412+38	TO	417+00	OUT	462	462	417+00	10	22	1.5	35.6	1	1	
412+38	TO	420+58	IN	820	820	420+58	6	36	1.5	35.6	1	2	**
417+00	TO	420+58	OUT	358	358	420+58	10	44	1.5	35.6	1	2	**
420+58	TO	424+21	IN	363	363								
424+21	TO	425+57	IN	STRUCTURE OMISSION		425+57	6	15	1.5	35.6	1	1	
420+58	TO	424+53	OUT	395	395								
424+53	TO	425+91	OUT	STRUCTURE OMISSION		425+91	10	20	1.5	35.6	1	1	
425+57	TO	430+00	IN	443	443	430+00	6	18	1.5	35.6	1	1	
425+91	TO	430+00	OUT	409	409	430+00	10	22	1.5	35.6	1	1	
430+00	TO	435+00	IN	500	500	435+00	6	18	1.5	35.6	1	1	
430+00	TO	435+00	OUT	500	500	435+00	10	22	1.5	35.6	1	1	
435+00	TO	440+00	IN	500	500	440+00	6	18	1.5	35.6	1	1	
435+00	TO	440+00	OUT	500	500	440+00	10	22	1.5	35.6	1	1	
440+00	TO	445+00	IN	500	500	445+00	6	17	1.5	35.6	1	1	
440+00	TO	445+00	OUT	500	500	445+00	10	22	1.5	35.6	1	1	
445+00	TO	450+00	IN	500	500								
445+00	TO	450+00	OUT	500	500								
450+00	TO	455+00	IN	500	500	455+00	6	18	1.5	35.6	1	1	
450+00	TO	455+00	OUT	500	500	455+00	10	22	1.5	35.6	1	1	
455+00	TO	458+90	IN	390	390	458+90	6	18	1.5	35.6	-	1	
455+00	TO	458+90	OUT	390	390	458+90	10	22	1.5	35.6	-	1	
459+10	TO	463+65	IN	455	455	463+65	4	24	1.5	35.6	-	2	**

US 51 NORTHBOUND UNDERDRAINS SCHEDULE

PIPE UNDERDRAINS						PIPE UNDERDRAIN OUTLETS							
LOCATION			SIDE	SHOULDER REMOVAL AND REPLACEMENT (FOOT)	PIPE UNDERDRAINS 6" (MODIFIED) (FOOT)	OUTLET STATION	SHOULDER REMOVAL AND REPLACEMENT (FOOT)	PIPE UNDERDRAINS 6" (SPECIAL) (FOOT)	CLASS SI CONCRETE (MISC) (CU YD)	REINFORCEMENT BARS (POUND)	CONCRETE HEADWALL REMOVAL SPECIAL (EACH)	RODENT SHIELD (EACH)	
US-51 NORTHBOUND			IN/OUT										
459+10	TO	463+50	OUT	440	440	463+50	10	44	1.5	35.6	1	2	**
463+65	TO	464+50	IN	85	85								
463+50	TO	464+50	OUT	100	100								
466+00	TO	470+00	IN	400	400	470+00	6	18	1.5	35.6	1	1	
466+00	TO	470+00	OUT	400	400	470+00	10	22	1.5	35.6	1	1	
470+00	TO	474+00	IN	400	400	474+00	6	42	-	-	-	2	*&**
470+00	TO	474+50	OUT	450	450	474+50	10	36	1.5	35.6	1	2	**
474+00	TO	479+00	IN	500	500	479+00	6	16	1.5	35.6	-	1	
474+50	TO	479+00	OUT	450	450	479+00	10	22	1.5	35.6	-	1	
479+00	TO	485+00	IN	600	600						1@481+00		
479+00	TO	485+00	OUT	600	600						1@481+00		
485+00	TO	489+00	IN	400	400	489+00	12	22	1.5	35.6	1	1	
485+00	TO	489+00	OUT	400	400	489+00	10	22	1.5	35.6	1	1	
489+00	TO	495+00	IN	600	600	495+00	12	18	1.5	35.6	1	1	
489+00	TO	496+00	OUT	700	700	496+00	10	18	1.5	35.6	1	1	
495+00	TO	500+00	IN	500	500	500+00	6	18	1.5	35.6	1	1	
496+00	TO	500+00	OUT	400	400	500+00	10	23	1.5	35.6	1	1	
500+00	TO	507+00	IN	700	700	507+00	6	36	1.5	35.6	1	2	**
500+00	TO	507+00	OUT	700	700	507+00	10	46	1.5	35.6	1	2	**
507+00	TO	510+00	IN	300	300	510+00	6	16	1.5	35.6	1	1	
507+00	TO	510+00	OUT	300	300	510+00	10	21	1.5	35.6	1	1	
510+00	TO	517+89	IN	789	789								
510+00	TO	517+89	OUT	789	789								
519+10	TO	526+10	IN	700	700	526+10	6	18	1.5	35.6	-	1	
519+10	TO	526+10	OUT	700	700	526+10	10	22	1.5	35.6	-	1	
526+10	TO	526+50	IN	OMISSION		526+50	6	18	1.5	35.6	-	1	
526+10	TO	526+50	OUT	OMISSION		526+50	10	22	1.5	35.6	-	1	
526+50	TO	530+00	IN	350	350	530+00	6	18	1.5	35.6	1	1	
526+50	TO	530+00	OUT	350	350	530+00	10	22	1.5	35.6	1	1	
530+00	TO	535+00	IN	500	500	535+00	6	18	1.5	35.6	1	1	
530+00	TO	535+00	OUT	500	500	535+00	10	22	1.5	35.6	1	1	
535+00	TO	538+00	IN	300	300								
535+00	TO	538+00	OUT	300	300								
538+00	TO	547+00	IN	900	900	547+00	6	32	1.5	35.6	1	2	**
538+00	TO	547+00	OUT	900	900	547+00	10	44	1.5	35.6	1	2	**
547+00	TO	553+20	IN	620	620	553+20	6	16	1.5	35.6	1	1	
547+00	TO	553+20	OUT	620	620	553+20	10	24	1.5	35.6	1	1	
553+20	TO	557+00	IN	380	380								
553+20	TO	557+00	OUT	380	380								
557+00	TO	563+20	IN	620	620	563+20	6	32	1.5	35.6	1	2	**
557+00	TO	563+20	OUT	620	620	563+20	10	48	1.5	35.6	1	2	**
563+20	TO	567+20	IN	400	400	567+20	6	17	1.5	35.6	1	1	
563+20	TO	567+20	OUT	400	400	567+20	10	22	1.5	35.6	1	1	
567+20	TO	571+20	IN	400	400								
567+20	TO	571+20	OUT	400	400								
571+20	TO	572+53	IN	OMISSION		572+53	4	12	1.5	35.6	1	1	
571+20	TO	572+53	OUT	OMISSION		572+53	10	24	1.5	35.6	1	1	
572+53	TO	574+01.69	IN	148.69	148.69								
572+53	TO	574+01.69	OUT	148.69	148.69								
STA. EQU. 574+01.69 BK=174+89.59 AH													
174+89.59	TO	178+00	IN	310.41	310.41	178+00	6	14	1.5	35.6	1	1	
174+89.59	TO	178+00	OUT	310.41	310.41	178+00	10	20	1.5	35.6	1	1	
178+00	TO	183+00	IN	500	500	183+00	6	12	1.5	35.6	1	1	
178+00	TO	183+00	OUT	500	500	183+00	10	20	1.5	35.6	1	1	
183+00	TO	187+00	IN	400	400	187+00	6	12	1.5	35.6	1	1	
183+00	TO	187+00	OUT	400	400	187+00	10	22	1.5	35.6	1	1	
187+00	TO	191+20	IN	420	420	191+20	10	18'	1.5	35.6	-	1	
187+00	TO	191+20	OUT	420	420	191+20	10	20	1.5	35.6	1@191+00	1	
191+00	TO	193+77	IN	277	277								
191+00	TO	193+47	OUT	247	247								
193+77	TO	195+40	IN	OMISSION		195+40	6	14	1.5	35.6	1	1	
193+47	TO	195+84	OUT	OMISSION		195+84	10	22	1.5	35.6	1	1	
195+40	TO	200+00	IN	460	460	200+00	6	12	1.5	35.6	1	1	
195+84	TO	200+00	OUT	416	416	200+00	10	20	1.5	35.6	1	1	
200+00	TO	205+00	IN	500	500	205+00	6	14	1.5	35.6	1	1	
200+00	TO	205+00	OUT	500	500	205+00	10	18	1.5	35.6	1	1	
205+00	TO	209+70	OUT	470	470								
205+00	TO	209+50	IN	450	450								

US 51 NORTHBOUND UNDERDRAINS SCHEDULE													
PIPE UNDERDRAINS						PIPE UNDERDRAIN OUTLETS							
LOCATION			SIDE	SHOULDER REMOVAL AND REPLACEMENT (FOOT)	PIPE UNDERDRAINS 6" (MODIFIED) (FOOT)	OUTLET STATION	SHOULDER REMOVAL AND REPLACEMENT (FOOT)	PIPE UNDERDRAINS 6" (SPECIAL) (FOOT)	CLASS SI CONCRETE (MISC) (CU YD)	REINFORCEMENT BARS (POUND)	CONCRETE HEADWALL REMOVAL SPECIAL (EACH)	RODENT SHIELD (EACH)	
US-51 NORTHBOUND			IN/OUT										
209+70	TO	210+20	OUT	OMISSION		210+20	10	38	1.5	35.6	-	1	
209+50	TO	209+80	IN	OMISSION		210+20	6	18	1.5	35.6	-	1	
210+20	TO	214+00	OUT	380	380	214+00	10	18	1.5	35.6	1	1	
209+80	TO	214+00	IN	420	420	214+00	6	14	1.5	35.6	1	1	
214+00	TO	219+00	IN	500	500								
214+00	TO	219+00	OUT	500	500								
219+00	TO	222+50	IN	350	350	222+50	6	18	1.5	35.6	-	1	
219+00	TO	222+80	OUT	380	380	222+80	10	28	1.5	35.6	-	1	
222+50	TO	223+50	IN	OMISSION		223+50	6	18	1.5	35.6	-	1	
222+80	TO	223+20	OUT	OMISSION		223+20	10	28	1.5	35.6	-	1	
223+50	TO	228+00	IN	450	450								
223+20	TO	228+00	OUT	480	480								
228+00	TO	232+00	IN	400	400	232+00	4	12	1.5	35.6	-	1	
228+00	TO	232+00	OUT	400	400	232+00	4	18	1.5	35.6	-	1	
234+00	TO	239+00	IN	500	500	239+00	6	14	1.5	35.6	1	1	
234+25	TO	239+00	OUT	475	475	239+00	10	16	1.5	35.6	1	1	
239+00	TO	243+80	IN	480	480	243+80	6	20	1.5	35.6	-	1	
239+00	TO	243+80	OUT	480	480	243+80	10	35	1.5	35.6	-	1	
244+10	TO	249+00	IN	490	490	249+00	6	14	1.5	35.6	1	1	
244+10	TO	249+00	OUT	490	490	249+00	10	18	1.5	35.6	1	1	
249+00	TO	253+30	IN	430	430	253+30	12	22	1.5	35.6	-	1	
249+00	TO	253+30	OUT	430	430	253+30	10	22	1.5	35.6	-	1	
253+60	TO	257+00	IN	340	340	257+00	6	12	1.5	35.6	1	1	
253+60	TO	257+00	OUT	340	340	257+00	10	18	1.5	35.6	1	1	
257+00	TO	261+00	IN	400	400	261+00	6	28	1.5	35.6	1	2	**
257+00	TO	261+00	OUT	400	400	261+00	10	36	1.5	35.6	1	2	**
261+00	TO	261+89	IN	89	89								
261+00	TO	262+04	OUT	104	104								
261+89	TO	263+35	IN	OMISSION		263+35	6	16	1.5	35.6	1	1	
262+04	TO	263+35	OUT	OMISSION		263+35	10	20	1.5	35.6	1	1	
263+35	TO	267+00	IN	365	365								
263+35	TO	267+00	OUT	365	365								
267+00	TO	271+00	IN	400	400	271+00	6	12	1.5	35.6	1	1	
267+00	TO	271+00	OUT	400	400	271+00	10	14	1.5	35.6	1	1	
271+00	TO	274+50	IN	350	350	274+50	6	12	1.5	35.6	1	1	
271+00	TO	274+50	OUT	350	350	274+50	10	16	1.5	35.6	1	1	
274+50	TO	278+00	IN	350	350	278+00	6	12	1.5	35.6	1	1	
274+50	TO	278+00	OUT	350	350	278+00	10	16	1.5	35.6	1	1	
278+00	TO	281+00	IN	300	300	281+00	6	28	1.5	35.6	1	2	**
278+00	TO	281+00	OUT	300	300	281+00	10	40	1.5	35.6	1	2	**
281+00	TO	284+30	IN	330	330								
281+00	TO	284+80	OUT	380	380								
284+80	TO	286+36	IN	156	156	284+80	4	12	1.5	35.6	-	1	
285+40	TO	286+43	OUT	103	103	285+40	4	18	1.5	35.6	-	1	
NORTHBOUND RURAL TOTAL =				72142	72142		1094	2973	206	4877	113	160	

* UNDERDRAIN CONNECTS TO INLET

** UNDERDRAIN LOW POINT

MODEL: Default
FILE NAME: pw:\\ildot-pw.bentley.com:PWIDOT\Documents\IDOT Offices\District 7\Projects\74800\CADData\CADsheets\0774800-sht-schedl.dgn

USER NAME = Mona,Steffen	DESIGNED -	REVISED -	
	DRAWN -	REVISED -	
PLOT SCALE = 100.0000 ' / in.	CHECKED -	REVISED -	
PLOT DATE = 4/6/2023	DATE -	REVISED -	

STATE OF ILLINOIS
DEPARTMENT OF TRANSPORTATION

SCHEDULE OF QUANTITIES

SCALE: | SHEET 19 OF 29 SHEETS | STA. TO STA.

F.A.P RTE.	SECTION	COUNTY	TOTAL SHEETS	SHEET NO.
322	50,51,52 RS-3	MACON	79	29

CONTRACT NO. 74800

ILLINOIS | FED. AID PROJECT

US 51 SOUTHBOUND UNDERDRAINS SCHEDULE

PIPE UNDERDRAINS						PIPE UNDERDRAIN OUTLETS							
LOCATION			SIDE	SHOULDER REMOVAL AND REPLACEMENT	PIPE UNDERDRAINS 6" (MODIFIED)	OUTLET STATION	SHOULDER REMOVAL AND REPLACEMENT	PIPE UNDERDRAINS 6" (SPECIAL)	CLASS SI CONCRETE (MISC)	REINFORCEMENT BARS	CONCRETE HEADWALL REMOVAL SPECIAL	RODENT SHIELD	
US-51 SOUTHBOUND			IN/OUT	(FOOT)	(FOOT)		(FOOT)	(FOOT)	(CU YD)	(POUND)	(EACH)	(EACH)	
305+75	TO	309+68	IN	393	393	309+68	6	32	1.5	35.6	1	2	**
305+75	TO	309+68	OUT	393	393	309+68	10	44	1.5	35.6	1	2	**
309+68	TO	314+00	OUT	432	432	314+00	10	24	1.5	35.6	1	1	
309+68	TO	314+00	IN	432	432	314+00	6	16	1.5	35.6	1	1	
314+00	TO	319+00	OUT	500	500	319+00	10	22	1.5	35.6	1	1	
314+00	TO	319+00	IN	500	500	319+00	6	16	1.5	35.6	1	1	
319+00	TO	324+00	OUT	500	500								
319+00	TO	324+00	IN	500	500								
324+00	TO	328+00	OUT	400	400	328+00	10	20	1.5	35.6	1@329+00	1	
324+00	TO	328+00	IN	400	400	328+00	6	18	1.5	35.6	1@329+00	1	
328+00	TO	332+00	OUT	400	400	332+00	10	21	1.5	35.6	-	1	
328+00	TO	331+00	IN	300	300	331+00	6	18	1.5	35.6	-	1	
332+00	TO	336+00	OUT	400	400	336+00	10	21	1.5	35.6	1	1	
331+00	TO	333+00	IN	OMISSION									
333+00	TO	338+85	IN	585	585	338+85	6	42	-	-	-	2	*&**
336+00	TO	339+00	OUT	300	300	339+00	10	40	1.5	35.6	1	2	**
339+00	TO	344+00	OUT	500	500	344+00	10	21	1.5	35.6	1	1	
338+85	TO	346+00	IN	715	715	346+00	6	18	1.5	35.6	1	1	
344+00	TO	349+00	OUT	500	500	349+00	10	20	1.5	35.6	1	1	
346+00	TO	349+00	IN	300	300	349+00	6	17	1.5	35.6	1	1	
349+00	TO	354+00	OUT	500	500								
349+00	TO	354+00	IN	500	500								
354+00	TO	357+89	OUT	389	389	357+89	10	18	1.5	35.6	1	1	
354+00	TO	357+80	IN	380	380	357+80	4	15	1.5	35.6	-	1	
357+89	TO	359+16	OUT	OMISSION		359+16	4	21	1.5	35.6	1	1	
357+80	TO	359+16	IN	OMISSION									
359+16	TO	360+00	IN	84	84	360+00	4	26	1.5	35.6	1	2	**
359+16	TO	364+00	OUT	484	484	364+00	10	22	1.5	35.6	1	1	
360+00	TO	366+00	IN	600	600	366+00	6	18	1.5	35.6	1	1	
364+00	TO	371+00	OUT	700	700	371+00	10	22	1.5	35.6	1	1	
366+00	TO	371+00	IN	500	500	371+00	6	16	1.5	35.6	1	1	
371+00	TO	376+00	OUT	500	500	376+00	10	22	1.5	35.6	1	1	
371+00	TO	376+00	IN	500	500	376+00	6	16	1.5	35.6	1	1	
376+00	TO	381+00	OUT	500	500	381+00	10	20	1.5	35.6	1	1	
376+00	TO	381+00	IN	500	500	381+00	6	16	1.5	35.6	1	1	
381+00	TO	386+72	OUT	572	572	386+72	10	21	1.5	35.6	1	1	
381+00	TO	387+00	IN	600	600	387+00	12	18	1.5	35.6	1	1	
386+72	TO	392+00	OUT	528	528	392+00	10	22	1.5	35.6	1	1	
387+00	TO	392+00	IN	500	500	392+00	6	18	1.5	35.6	1	1	
392+00	TO	397+00	IN	500	500								
392+00	TO	397+00	OUT	500	500								
397+00	TO	402+50	IN	550	550	402+50	6	16	1.5	35.6	1	1	
397+00	TO	402+50	OUT	550	550	402+50	10	22	1.5	35.6	1	1	
402+50	TO	407+50	IN	500	500	407+50	6	16	1.5	35.6	1	1	
402+50	TO	407+50	OUT	500	500	407+50	10	22	1.5	35.6	1	1	
407+50	TO	411+00	IN	350	350	411+00	6	13	1.5	35.6	1	1	
407+50	TO	411+12	OUT	362	362	411+12	10	18	1.5	35.6	1	1	
412+38	TO	417+00	OUT	462	462	417+00	10	22	1.5	35.6	1	1	
412+38	TO	420+58	IN	820	820	420+58	6	36	1.5	35.6	1	2	**
417+00	TO	420+58	OUT	358	358	420+58	10	44	1.5	35.6	1	2	**
420+58	TO	423+56	OUT	298	298								
420+58	TO	423+88	IN	330	330								
423+56	TO	424+94	OUT	STRUCTURE OMISSION		424+94	10	15	1.5	35.6	1	1	
423+88	TO	425+27	IN	STRUCTURE OMISSION		425+27	6	16	1.5	35.6	1	1	
424+94	TO	430+00	OUT	506	506	430+00	10	22	1.5	35.6	1	1	
425+27	TO	430+00	IN	473	473	430+00	6	18	1.5	35.6	1	1	
430+00	TO	435+00	IN	500	500	435+00	6	18	1.5	35.6	1	1	
430+00	TO	435+00	OUT	500	500	435+00	10	22	1.5	35.6	1	1	
435+00	TO	440+00	IN	500	500	440+00	12	18	1.5	35.6	1	1	
435+00	TO	440+00	OUT	500	500	440+00	10	22	1.5	35.6	1	1	
440+00	TO	445+00	IN	500	500	445+00	6	17	1.5	35.6	1	1	
440+00	TO	445+00	OUT	500	500	445+00	10	22	1.5	35.6	1	1	
445+00	TO	450+00	IN	500	500								
445+00	TO	450+00	OUT	500	500								
450+00	TO	455+00	IN	500	500	455+00	6	18	1.5	35.6	1	1	
450+00	TO	455+00	OUT	500	500	455+00	10	22	1.5	35.6	1	1	
455+00	TO	460+00	IN	500	500	460+00	6	18	1.5	35.6	1	1	
455+00	TO	460+00	OUT	500	500	460+00	10	23	1.5	35.6	1	1	
460+00	TO	463+65	IN	365	365	463+65	6	24	1.5	35.6	-	2	**

US 51 SOUTHBOUND UNDERDRAINS SCHEDULE

PIPE UNDERDRAINS						PIPE UNDERDRAIN OUTLETS							
LOCATION			SIDE	SHOULDER REMOVAL AND REPLACEMENT (FOOT)	PIPE UNDERDRAINS 6" (MODIFIED) (FOOT)	OUTLET STATION	SHOULDER REMOVAL AND REPLACEMENT (FOOT)	PIPE UNDERDRAINS 6" (SPECIAL) (FOOT)	CLASS SI CONCRETE (MISC) (CU YD)	REINFORCEMENT BARS (POUND)	CONCRETE HEADWALL REMOVAL SPECIAL (EACH)	RODENT SHIELD (EACH)	
US-51 SOUTHBOUND			IN/OUT										
460+00	TO	463+50	OUT	350	350	463+50	10	44	1.5	35.6	1	2	**
463+65	TO	464+29	IN	64	64								
463+50	TO	464+29	OUT	79	79								
465+77	TO	470+00	IN	423	423	470+00	6	18	1.5	35.6	1	1	
465+77	TO	470+00	OUT	423	423	470+00	10	22	1.5	35.6	1	1	
470+00	TO	474+00	IN	400	400	474+00	6	42	-	-	-	-	*&**
470+00	TO	474+25	OUT	425	425	474+25	10	36	1.5	35.6	1	2	**
474+00	TO	479+00	IN	500	500	479+00	6	16	1.5	35.6	1	1	
474+00	TO	479+00	OUT	500	500	479+00	10	22	1.5	35.6	1	1	
479+00	TO	485+00	IN	600	600								
479+00	TO	485+00	OUT	600	600								
485+00	TO	490+00	IN	500	500	490+00	6	16	1.5	35.6	1	1	
485+00	TO	490+00	OUT	500	500	490+00	10	20	1.5	35.6	1	1	
490+00	TO	497+00	IN	700	700	497+00	12	16	1.5	35.6	1	1	
490+00	TO	497+00	OUT	700	700	497+00	10	24	1.5	35.6	1	1	
497+00	TO	502+00	IN	500	500	502+00	6	18	1.5	35.6	1	1	
497+00	TO	502+00	OUT	500	500	502+00	10	23	1.5	35.6	1	1	
502+00	TO	506+80	IN	480	480	506+80	6	20	1.5	35.6	-	1	
502+00	TO	506+80	OUT	480	480	506+80	10	20	1.5	35.6	-	1	
506+80	TO	507+20	IN	OMISSION		507+20	6	20	1.5	35.6	-	1	
506+80	TO	507+20	OUT	OMISSION		507+20	10	20	1.5	35.6	-	1	
507+20	TO	514+00	IN	680	680	514+00	6	16	1.5	35.6	1	1	
507+20	TO	514+00	OUT	680	680	514+00	10	21	1.5	35.6	1	1	
514+00	TO	517+87	IN	387	387								
514+00	TO	517+87	OUT	387	387								
519+10	TO	526+30	IN	720	720	526+30	6	30	1.5	35.6	1	2	**
519+10	TO	526+30	OUT	720	720	526+30	10	40	1.5	35.6	1	2	**
526+30	TO	532+00	IN	570	570	532+00	6	17	1.5	35.6	1	1	
526+30	TO	532+00	OUT	570	570	532+00	10	22	1.5	35.6	1	1	
532+00	TO	538+00	IN	600	600								
532+00	TO	538+00	OUT	600	600								
538+00	TO	544+80	IN	680	680	544+80	6	20	1.5	35.6	-	1	
538+00	TO	544+80	OUT	680	680	544+80	10	22	1.5	35.6	-	1	
545+10	TO	547+00	IN	190	190	547+00	6	32	1.5	35.6	1	2	**
545+10	TO	547+00	OUT	190	190	547+00	10	44	1.5	35.6	1	2	**
547+00	TO	552+00	IN	500	500	552+00	6	16	1.5	35.6	1	1	
547+00	TO	552+00	OUT	500	500	552+00	10	24	1.5	35.6	1	1	
552+00	TO	557+00	IN	500	500								
552+00	TO	557+00	OUT	500	500								
557+00	TO	561+80	IN	480	480	561+80	6	18	1.5	35.6	-	1	
557+00	TO	561+80	OUT	480	480	561+80	10	20	1.5	35.6	-	1	
561+80	TO	562+20	IN	OMISSION		562+20	6	18	1.5	35.6	-	1	
561+80	TO	562+20	OUT	OMISSION		562+20	10	20	1.5	35.6	-	1	
562+20	TO	567+00	IN	480	480	567+00	6	16	1.5	35.6	1	1	
562+20	TO	567+00	OUT	480	480	567+00	10	20	1.5	35.6	1	1	
567+00	TO	571+20	IN	420	420								
567+00	TO	571+20	OUT	420	420								
571+20	TO	572+53	IN	OMISSION		572+53	4	10	1.5	35.6	1	1	
571+20	TO	572+53	OUT	OMISSION		572+53	4	14	1.5	35.6	1	1	
572+53	TO	574+01.69	IN	148.7	148.7								
572+53	TO	574+01.69	OUT	148.7	148.7								
STA. EQU. 574+01.69 BK=174+89.59 AH													
174+89.59	TO	178+00	IN	310.4	310.4								
174+89.59	TO	178+00	OUT	310.4	310.4								
178+00	TO	181+50	IN	350	350	181+50	6	18	1.5	35.6	-	1	
178+00	TO	181+80	OUT	380	380	181+80	10	28	1.5	35.6	-	1	
181+50	TO	182+50	IN	OMISSION		182+50	6	18	1.5	35.6	-	1	
181+80	TO	182+20	OUT	OMISSION		182+20	10	28	1.5	35.6	-	1	
182+50	TO	187+00	IN	450	450								
182+20	TO	187+00	OUT	480	480								
187+00	TO	190+80	IN	380	380	190+80	6	22	1.5	35.6	-	1	
187+00	TO	190+80	OUT	380	380	190+80	10	24	1.5	35.6	-	1	
190+80	TO	191+20	IN	OMISSION		191+20	6	22	1.5	35.6	-	1	
190+80	TO	191+20	OUT	OMISSION		191+20	10	24	1.5	35.6	-	1	
191+20	TO	193+63	IN	243	243								
191+20	TO	195+05	OUT	385	385								
193+63	TO	195+40	IN	OMISSION		195+40	4	14	1.5	35.6	-	1	
195+05	TO	195+40	OUT	OMISSION		195+40	10	22	1.5	35.6	-	1	

US 51 SOUTHBOUND UNDERDRAINS SCHEDULE

PIPE UNDERDRAINS						PIPE UNDERDRAIN OUTLETS							
LOCATION			SIDE	SHOULDER REMOVAL AND REPLACEMENT (FOOT)	PIPE UNDERDRAINS 6" (MODIFIED) (FOOT)	OUTLET STATION	SHOULDER REMOVAL AND REPLACEMENT (FOOT)	PIPE UNDERDRAINS 6" (SPECIAL) (FOOT)	CLASS SI CONCRETE (MISC) (CU YD)	REINFORCEMENT BARS (POUND)	CONCRETE HEADWALL REMOVAL SPECIAL (EACH)	RODENT SHIELD (EACH)	
US-51 SOUTHBOUND			IN/OUT										
195+40	TO	199+64	IN	424	424								
195+40	TO	199+64	OUT	424	424								
199+64	TO	199+93	IN	OMISSION		199+93	6	18	1.5	35.6	-	1	
199+64	TO	199+93	OUT	OMISSION		199+93	10	22	1.5	35.6	-	1	
199+93	TO	205+00	IN	507	507	205+00	6	14	1.5	35.6	1	1	
199+93	TO	205+00	OUT	507	507	205+00	10	18	1.5	35.6	1	1	
205+00	TO	209+24	IN	424	424								
205+00	TO	209+08	OUT	408	408								
209+24	TO	209+80	IN	OMISSION		209+80	6	18	1.5	35.6	-	1	
209+08	TO	209+40	OUT	OMISSION		209+40	10	35	1.5	35.6	-	1	
209+80	TO	214+00	IN	420	420	214+00	6	12	1.5	35.6	1	1	
209+40	TO	214+00	OUT	460	460	214+00	10	20	1.5	35.6	1	1	
214+00	TO	219+00	IN	500	500								
214+00	TO	219+00	OUT	500	500								
219+00	TO	222+50	IN	350	350	222+50	6	18	1.5	35.6	-	1	
219+00	TO	222+80	OUT	380	380	222+80	10	22	1.5	35.6	-	1	
222+50	TO	223+50	IN	OMISSION		223+50	6	18	1.5	35.6	-	1	
223+50	TO	228+00	IN	450	450								
222+80	TO	228+00	OUT	520	520	228+00	10	16	1.5	35.6	1	1	
228+00	TO	232+00	IN	400	400	232+00	4	12	1.5	35.6	-	1	
228+00	TO	232+00	OUT	400	400	232+00	4	18	1.5	35.6	-	1	
234+00	TO	239+00	IN	500	500	239+00	4	12	1.5	35.6	1	1	
234+45	TO	239+00	OUT	455	455	239+00	4	16	1.5	35.6	1	1	
239+00	TO	244+00	IN	500	500	244+00	6	14	1.5	35.6	1	1	
239+00	TO	244+00	OUT	500	500	244+00	10	18	1.5	35.6	1	1	
244+00	TO	249+00	IN	500	500	249+00	6	14	1.5	35.6	1	1	
244+00	TO	249+00	OUT	500	500	249+00	10	18	1.5	35.6	1	1	
249+00	TO	253+50	IN	450	450	253+50	6	12	1.5	35.6	1	1	
249+00	TO	253+50	OUT	450	450	253+50	10	20	1.5	35.6	1	1	
253+50	TO	257+00	IN	350	350	257+00	10	18	1.5	35.6	1	1	
253+50	TO	257+00	OUT	350	350	257+00	10	18	1.5	35.6	1	1	
257+00	TO	261+00	IN	400	400	261+00	6	28	1.5	35.6	1	2	**
257+00	TO	261+00	OUT	400	400	261+00	10	36	1.5	35.6	1	2	**
261+00	TO	261+76	IN	76	76								
261+00	TO	261+61	OUT	61	61								
261+76	TO	263+35	IN	OMISSION		263+35	6	14	1.5	35.6	1	1	
261+61	TO	263+35	OUT	OMISSION		263+35	10	18	1.5	35.6	1	1	
263+35	TO	267+00	IN	365	365								
263+35	TO	267+00	OUT	365	365								
267+00	TO	271+00	IN	400	400	271+00	6	12	1.5	35.6	1	1	
267+00	TO	271+00	OUT	400	400	271+00	10	18	1.5	35.6	1	1	
271+00	TO	274+50	IN	350	350	274+50	6	14	1.5	35.6	1	1	
271+00	TO	274+50	OUT	350	350	274+50	10	20	1.5	35.6	1	1	
274+50	TO	277+80	IN	330	330	277+80	6	15	1.5	35.6	-	1	
274+50	TO	277+80	OUT	330	330	277+80	10	28	1.5	35.6	-	1	
278+10	TO	281+00	IN	290	290	281+00	6	28	1.5	35.6	1	2	**
278+10	TO	281+00	OUT	290	290	281+00	10	40	1.5	35.6	1	2	**
281+00	TO	283+96	IN	296	296								
281+00	TO	283+70	OUT	270	270								
284+80	TO	286+16	IN	136	136	284+80	6	15	1.5	35.6	-	1	
284+10	TO	286+26	OUT	216	216	284+10	10	22	1.5	35.6	-	1	
SOUTHBOUND RURAL TOTALS =				72269	72269		1126	3011	210	4984	103	159	
PROJECT TOTALS =				144411	144411		2220	5984	416	9861	216	319	

*UNDERDRAIN CONNECTS TO INLET

**UNDERDRAIN LOW POINT

MODEL: Default
FILE NAME: pw:\\ildot-pw.bentley.com:PWIDOT\Documents\IDOT Offices\District 7\Projects\74800\CAD\data\CADsheets\0774800-sht-schedule.dgn

USER NAME = Mona.Steffen	DESIGNED -	REVISED -	STATE OF ILLINOIS DEPARTMENT OF TRANSPORTATION
	DRAWN -	REVISED -	
PLOT SCALE = 100.0000 ' / in.	CHECKED -	REVISED -	
PLOT DATE = 4/6/2023	DATE -	REVISED -	

SCHEDULE OF QUANTITIES

SCALE: SHEET 22 OF 29 SHEETS STA. TO STA.

F.A.P RTE.	SECTION	COUNTY	TOTAL SHEETS	SHEET NO.
322	50,51,52 RS-3	MACON	79	32
		CONTRACT NO. 74800		
		ILLINOIS FED. AID PROJECT		

NORTHBOUND US 51 THERMOPLASTIC PAVEMENT MARKING

STATIONING		LENGTH	THERMOPLASTIC PAVEMENT MARKING-LINE 4" (FOOT)		THERMOPLASTIC PAVEMENT MARKING-LINE 6" (FOOT)					GROOVING FOR RECESSED PAVEMENT MARKING 5"	GROOVING FOR RECESSED PAVEMENT MARKING 7" (FOOT)			
FROM	TO	(FOOT)			EOP	EOP	TL	TL EXT.	TL EXT.	(FOOT)	EOP	EOP	TL	TL EXT.
NORTHBOUND US 51			YELLOW	WHITE	YELLOW	WHITE	WHITE	YELLOW	WHITE					
265+10.00	273+82.08	872.08			872.08	872.08					872.08	872.08		
STA EQU: 273+82.08 BK= 273+79.78 AH														
273+79.78	277+50.65	370.87			370.87	370.87					370.87	370.87		
SUB TOTAL =					1243	1243					1243	1243		
URBAN TOTAL =					2486						2486			
277+50.65	304+74.00	2723.35			2723.35	2723.35					2723.35	2723.35		
304+74.00	305+38.00	64.00				64.00						64.00		
305+38.00	305+90.00	52.00			52.00	52.00					52.00	52.00		
305+90.00	331+18.00	2528.00			2528.00	2528.00					2528.00	2528.00		
331+18.00	331+90.00	72.00			72.00						72.00			
331+90.00	332+81.00	91.00												
332+81.00	333+61.00	80.00			80.00						80.00			
333+61.00	357+93.80	2432.80			2432.80	2432.80					2432.80	2432.80		
STA EQU: 357+93.80 BK=357+91.02 AH														
357+91.02	358+06.00	14.98			14.98	14.98					14.98	14.98		
358+06.00	358+22.00	16.00			16.00						16.00			
358+22.00	358+89.00	67.00												
358+89.00	359+12.00	23.00			23.00						23.00			
359+12.00	411+45.00	5233.00			5233.00	5233.00					5233.00	5233.00		
411+45.00	411+50.00	5.00			5.00						5.00			
411+50.00	412+16.00	66.00												
412+16.00	412+48.00	32.00			32.00						32.00			
412+48.00	464+85.00	5237.00			5237.00	5237.00					5237.00	5237.00		
464+85.00	465+52.00	67.00												
465+52.00	465+81.00	29.00			29.00						29.00			
465+81.00	518+07.00	5226.00			5226.00	5226.00					5226.00	5226.00		
518+07.00	518+17.00	10.00			10.00						10.00			
518+17.00	518+84.00	67.00												
518+84.00	519+32.00	48.00			48.00						48.00			
519+32.00	571+40.00	5208.00			5208.00	5208.00					5208.00	5208.00		
571+40.00	571+52.00	12.00			12.00						12.00			
571+52.00	572+18.00	66.00												
572+18.00	572+46.00	28.00			28.00						28.00			
572+46.00	574+01.69	155.69			155.69	155.69					155.69	155.69		
STA EQU: 574+01.69 BK=174+89.59 AH														
174+89.59	193+61.00	1871.41			1871.41	1871.41					1871.41	1871.41		
193+61.00	193+77.00	16.00			16.00						16.00			
193+77.00	194+19.00	42.00			42.00						42.00			
194+19.00	194+81.00	62.00												
194+81.00	195+40.00	59.00			59.00						59.00			
195+40.00	195+84.00	44.00			44.00						44.00			
195+84.00	232+19.00	3635.00			3635.00	3635.00					3635.00	3635.00		
232+19.00	233+00.00	81.00			81.00						81.00			
233+00.00	233+58.00	58.00												
233+58.00	234+10.00	52.00			52.00						52.00			
234+10.00	234+57.00	47.00			47.00						47.00			
234+57.00	286+49.00	5192.00			5192.00	5192.00					5192.00	5192.00		
286+49.00	286+68.00	19.00			19.00						19.00			
286+68.00	287+32.00	64.00												
287+32.00	287+68.00	36.00			36.00						36.00			
287+68.00	288+51.00	83.00			83.00	83.00					83.00	83.00		
NORTHBOUND US 51														
TURNLANE/INTERSECTION PAVEMENT MARKING														
SHELLABARGER ROAD														
300+15.00	302+45.00	230.00							57.50					57.50
302+45.00	304+58.00	213.00					213.00						213.00	
304+58.00	304+92.00	34.00												
304+92.00	305+90.00	98.00							24.50					24.50
SPACEMARK ROAD														
324+88.00	328+13.00	325.00							81.25					81.25
328+13.00	331+49.00	336.00					336.00						336.00	
331+82.00	333+51.00	169.00						42.25						42.25
331+49.00	333+61.00	-	76.00			82.00				76.00		82.00		
WISE ROAD														
353+60.00	355+90.00	230.00							57.50					57.50
353+68.00	355+98.00	230.00							57.5					57.50
355+90.00	355+98.00	8.00					8.00						8.00	
355+98.00	357+93.80	195.80					391.60						391.60	
STA EQU: 357+93.80 BK=357+91.02 AH														
357+91.02	357+93.00	1.98					3.96						3.96	
357+93.00	358+21.00	28.00					28.00						28.00	
358+21.00	358+37.00	16.00												
358+37.00	359+45.00	108.00						27.00						27.00

NORTHBOUND US 51 THERMOPLASTIC PAVEMENT MARKING CONT.

STATIONING		LENGTH	THERMOPLASTIC PAVEMENT MARKING-LINE 4" (FOOT)		THERMOPLASTIC PAVEMENT MARKING-LINE 6" (FOOT)					GROOVING FOR RECESSED PAVEMENT MARKING 5" (FOOT)	GROOVING FOR RECESSED PAVEMENT MARKING 7" (FOOT)			
FROM	TO	(FOOT)			EOP	EOP	TL	TL EXT.	TL EXT.		EOP	EOP	TL	TL EXT.
			YELLOW	WHITE	YELLOW	WHITE	WHITE	YELLOW	WHITE					
NORTHBOUND US 51 TURNLANE/INTERSECTION PAVEMENT MARKING														
EMERY ROAD														
406+81.00	409+11.00	230.00							57.50					57.50
406+83.00	409+33.00	250.00							62.50					62.50
409+11.00	411+24.00	213.00					213.00						213.00	
411+24.00	411+66.00	42.00												
411+66.00	412+66.00	100.00							25.00					25.00
409+33.00	411+55.00	222.00					222.00						222.00	
HAMPSHIRE ROAD														
460+24.00	462+54.00	230.00							57.50					57.50
460+34.00	462+64.00	230.00							57.50					57.50
462+54.00	464+57.00	203.00					203.00						203.00	
464+57.00	465+01.00	44.00												
465+01.00	466+09.00	108.00							27.00					27.00
462+64.00	464+85.00	221.00					221.00						221.00	
SCHOOL ROAD														
513+55.00	515+85.00	230.00							57.50					57.50
513+63.00	515+93.00	230.00							57.50					57.50
515+85.00	517+88.00	203.00					203.00						203.00	
517+88.00	518+32.00	44.00												
518+32.00	519+40.00	108.00							27.00					27.00
515+93.00	518+16.00	223.00					223.00						223.00	
DUROC ROAD														
566+89.00	569+19.00	230.00							57.50					57.50
566+97.00	569+27.00	230.00							57.50					57.50
569+19.00	571+22.00	203.00					203.00						203.00	
571+22.00	571+66.00	44.00												
571+66.00	572+74.00	108.00							27.00					27.00
569+27.00	571+50.00	223.00					223.00						223.00	
WOOD STREET														
187+58.00	190+53.00	295.00							73.75					73.75
190+53.00	193+89.00	336.00					336.00						336.00	
193+89.00	195+84.00	-	72.00							72.00				
193+77.00	195+40.00	163.00						40.75						40.75
WASHINGTON STREET														
226+02.00	229+02.00	300.00							75.00					75.00
226+63.00	229+63.00	300.00							75.00					75.00
229+63.00	232+71.00	308.00					308.00						308.00	
232+71.00	233+08.00	37.00												
233+08.00	234+10.00	102.00							25.50					25.50
229+02.00	232+50.00	348.00					348.00						348.00	
232+50.00	234+57.00	-	83.00	36.00						119.00				
LAKE FORK ROAD														
282+00.00	284+30.00	230.00							57.50					57.50
282+17.00	284+47.00	230.00							57.50					57.50
284+30.00	286+37.00	207.00					207.00						207.00	
286+37.00	286+87.00	50.00												
286+87.00	287+86.00	99.00							24.75					24.75
284+47.00	286+71.00	224.00					224.00						224.00	
SUBTOTAL =			231	36	40343	39738	4115	110	1238	267	40343	39738	4115	1348
RURAL TOTAL =			267		85544					267	85544			

MODEL: Default
FILE NAME: pw:\\ildot-pw.bentley.com:PWIDOT\Documents\IDOT Offices\District 7\Projects\74800\CADData\CATsheets\0774800-sht-schedule.dgn

USER NAME = Mona.Steffen	DESIGNED -	REVISED -	
	DRAWN -	REVISED -	
PLOT SCALE = 100.0000 ' / in.	CHECKED -	REVISED -	
PLOT DATE = 4/6/2023	DATE -	REVISED -	

STATE OF ILLINOIS
DEPARTMENT OF TRANSPORTATION

SCHEDULE OF QUANTITIES

SCALE: | SHEET 24 OF 29 SHEETS | STA. TO STA.

F.A.P RTE.	SECTION	COUNTY	TOTAL SHEETS	SHEET NO.
322	50,51,52 RS-3	MACON	79	34

CONTRACT NO. 74800

ILLINOIS | FED. AID PROJECT

SOUTHBOUND US 51 THERMOPLASTIC PAVEMENT MARKING

STATIONING		LENGTH	THERMOPLASTIC PAVEMENT MARKING-LINE 4" (FOOT)		THERMOPLASTIC PAVEMENT MARKING-LINE 6" (FOOT)					GROOVING FOR RECESSED PAVEMENT MARKING 5"	GROOVING FOR RECESSED PAVEMENT MARKING 7" (FOOT)			
FROM	TO	(FOOT)			EOP	EOP	TL	TL EXT.	TL EXT.	(FOOT)	EOP	EOP	TL	TL EXT.
SOUTHBOUND US 51			YELLOW	WHITE	YELLOW	WHITE	WHITE	YELLOW	WHITE					
265+10.00	273+82.08	872.08			872.08	872.08					872.08	872.08		
STA EQU: 273+82.08 BK= 273+79.78 AH														
273+79.78	277+50.65	370.87			370.87	370.87					370.87	370.87		
SUBTOTAL =					1243	1243					1242.95	1242.95		
URBAN TOTAL =							2486					2486		
277+50.65	304+48.00	2697.35			2697.35	2697.35					2697.35	2697.35		
304+48.00	304+74.00	26.00			26.00						26.00			
304+74.00	305+38.00	64.00												
305+38.00	305+63.00	25.00			25.00	25.00					25.00	25.00		
305+63.00	331+90.00	2627.00			2627.00	2627.00					2627.00	2627.00		
331+90.00	332+81.00	91.00				91.00						91.00		
332+81.00	357+93.80	2512.80			2512.80	2512.80					2512.80	2512.80		
STA EQU: 357+93.80 BK=357+91.02 AH														
357+91.02	358+22.00	30.98			30.98						30.98			
358+22.00	358+89.00	67.00												
358+89.00	411+16.00	5227.00			5227.00	5227.00					5227.00	5227.00		
411+16.00	411+50.00	34.00			34.00						34.00			
411+50.00	412+16.00	66.00												
412+16.00	464+57.00	5241.00			5241.00	5241.00					5241.00	5241.00		
464+57.00	464+85.00	28.00			28.00						28.00			
464+85.00	465+52.00	67.00												
465+52.00	517+92.00	5240.00			5240.00	5240.00					5240.00	5240.00		
517+92.00	518+17.00	25.00			25.00						25.00			
518+17.00	518+84.00	67.00												
518+84.00	571+22.00	5238.00			5238.00	5238.00					5238.00	5238.00		
571+22.00	571+52.00	30.00			30.00						30.00			
571+52.00	572+18.00	66.00												
572+18.00	572+25.00	7.00			7.00						7.00			
572+25.00	574+01.69	176.69			176.69	176.69					176.69	176.69		
STA EQU: 574+01.69 BK=174+89.59 AH														
174+89.59	194+19.00	1929.41			1929.41	1929.41					1929.41	1929.41		
194+19.00	194+81.00	62.00				62.00						62.00		
194+81.00	232+01.00	3720.00			3720.00	3720.00					3720.00	3720.00		
232+01.00	232+44.00	43.00			43.00						43.00			
232+44.00	233+00.00	56.00			56.00						56.00			
233+00.00	233+58.00	58.00												
233+58.00	234+39.00	81.00			81.00						81.00			
234+39.00	286+26.00	5187.00			5187.00	5187.00					5187.00	5187.00		
286+26.00	286+68.00	42.00			42.00						42.00			
286+68.00	287+32.00	64.00												
287+32.00	287+45.00	13.00			13.00						13.00			
287+45.00	288+51.00	106.00			106.00	106.00					106.00	106.00		
SOUTHBOUND US 51														
TURNLANE/INTERSECTION PAVEMENT MARKING														
SHELLABARGER ROAD														
304+18.00	305+43.00	125.00						31.25						31.25
305+43.00	307+77.00	234.00					234.00						234.00	
307+77.00	310+07.00	230.00							57.50					57.50
SPACEMARK ROAD														
330+74.00	332+23.00	149.00							37.25					37.25
332+23.00	332+74.00	51.00												
332+74.00	335+42.00	268.00					268.00						268.00	
335+42.00	339+06.00	364.00							91.00					91.00
WISE ROAD														
357+68.00	357+93.80	25.80							6.45					6.45
STA EQU: 357+93.80 BK=357+91.02 AH														
357+91.02	358+73.00	81.98							20.50					20.50
358+73.00	359+17.00	44.00												
359+17.00	361+20.00	203.00					203.00						203.00	
358+89.00	361+12.00	223.00					223.00						223.00	
361+12.00	363+42.00	230.00							57.50					57.50
361+20.00	363+50.00	230.00							57.50					57.50

SOUTHBOUND US 51 THERMOPLASTIC PAVEMENT MARKING CONT.

STATIONING		LENGTH	THERMOPLASTIC PAVEMENT MARKING-LINE 4" (FOOT)		THERMOPLASTIC PAVEMENT MARKING-LINE 6" (FOOT)					GROOVING FOR RECESSED PAVEMENT MARKING 5" (FOOT)	GROOVING FOR RECESSED PAVEMENT MARKING 7" (FOOT)			
FROM	TO	(FOOT)			EOP	EOP	TL	TL EXT.	TL EXT.		EOP	EOP	TL	TL EXT.
SOUTHBOUND US 51			YELLOW	WHITE	YELLOW	WHITE	WHITE	YELLOW	WHITE					
TURNLANE/INTERSECTION PAVEMENT MARKING														
EMERY ROAD														
411+00.00	412+00.00	100.00							25.00					25.00
412+00.00	412+42.00	42.00												
412+42.00	414+55.00	213.00					213.00						213.00	
412+09.00	414+33.00	224.00					224.00						224.00	
414+33.00	416+63.00	230.00							57.50					57.50
414+55.00	416+85.00	230.00							57.50					57.50
HAMPSHIRE ROAD														
464+29.00	465+37.00	108.00							27.00					27.00
465+37.00	465+81.00	44.00												
465+81.00	467+84.00	203.00					203.00						203.00	
465+52.00	467+72.00	220.00					220.00						220.00	
467+72.00	470+02.00	230.00							57.50					57.50
467+84.00	470+14.00	230.00							57.50					57.50
SCHOOL ROAD														
517+60.00	518+68.00	108.00							27.00					27.00
518+68.00	519+12.00	44.00												
519+12.00	521+15.00	203.00					203.00						203.00	
518+84.00	521+07.00	223.00					223.00						223.00	
521+07.00	523+37.00	230.00							57.50					57.50
521+15.00	523+45.00	230.00							57.50					57.50
DUROC ROAD														
570+95.00	572+02.00	107.00							26.75					26.75
572+02.00	572+16.00	14.00												
572+16.00	572+46.00	30.00					30.00						30.00	
572+46.00	574+01.69	155.69					311.38						311.38	
STA EQU: 574+01.69 BK=174+89.59 AH														
174+89.59	175+29.00	39.41					78.82						78.82	
175+29.00	175+36.00	7.00					7.00						7.00	
175+29.00	177+63.00	234.00							58.50					58.50
175+36.00	177+69.00	233.00							58.25					58.25
WOOD STREET														
193+62.00	194+66.00	104.00							26.00					26.00
194+66.00	195+04.00	38.00												
195+04.00	198+16.00	312.00					312.00						312.00	
198+16.00	201+17.00	301.00							75.25					75.25
WASHINGTON STREET														
232+44.00	233+50.00	106.00							26.50					26.50
233+50.00	233+87.00	37.00												
233+87.00	236+96.00	309.00					309.00						309.00	
232+01.00	234+08.00	-	81.00	34.00						115.00				
234+08.00	237+56.00	348.00					348.00						348.00	
236+96.00	239+96.00	300.00							75.00					75.00
237+56.00	240+56.00	300.00							75.00					75.00
LAKE FORK ROAD														
286+15.00	287+21.00	106.00							26.50					26.50
287+21.00	287+62.00	41.00												
287+62.00	288+51.00	89.00					89.00						89.00	
287+27.00	288+51.00	124.00					124.00						124.00	
	SUBTOTAL =		81	34	40343	40080	3823	31	1199	115	40343	40080	3823	1231
	RURAL TOTAL =		115		85477					115	85477			

NORTHBOUND US 51 THERMOPLASTIC PAVEMENT MARKING

STATIONING FROM	STATIONING TO	LENGTH (FOOT)	THERMOPLASTIC PAVEMENT MARKING-LINE 8" (FOOT)	THERMOPLASTIC PAVEMENT MARKING-LINE 12" (FOOT)	THERMOPLASTIC PAVEMENT MARKING-LINE 24" (FOOT)	THERMOPLASTIC PAVEMENT MARKING-LETTERS AND SYMBOLS (SQ YD)	GROOVING FOR RECESSED PAVEMENT MARKING 9" (FOOT(	GROOVING FOR RECESSED PAVEMENT MARKING 13" (FOOT)	GROOVING FOR RECESSED PAVEMENT MARKING 25" (FOOT)	GROOVING FOR RECESSED PAVEMENT MARKING, LETTERS AND SYMBOLS (SQ YD)
NORTHBOUND US 51			WHTIE	WHITE	WHITE	WHITE				
TURNLANE/INTERSECTION PAVEMENT MARKING										
SHELLABARGER ROAD										
300+15.00	302+45.00	230.00								
302+45.00	304+58.00	213.00				62.40				62.40
304+58.00	304+92.00	34.00	75.00	15.00			75.00	15.00		
304+92.00	305+90.00	98.00								
SPACEMARK ROAD										
324+88.00	328+13.00	325.00								
328+13.00	331+49.00	336.00				78.00				78.00
331+82.00	333+51.00	169.00								
331+49.00	333+61.00	-	392.00	228.00	30.00		392.00	228.00	30.00	
WISE ROAD										
353+60.00	355+90.00	230.00								
353+68.00	355+98.00	230.00								
355+90.00	355+98.00	8.00				15.60				15.60
355+98.00	357+93.80	195.80				93.60				93.60
STA EQU: 357+93.80 BK=357+91.02 AH										
357+91.02	357+93.00	1.98				15.60				15.60
357+93.00	358+21.00	28.00	28.00	6.00			28.00	6.00		
358+21.00	358+37.00	16.00	72.00	25.00			72.00	25.00		
358+37.00	359+45.00	108.00								
EMERY ROAD										
406+81.00	409+11.00	230.00								
406+83.00	409+33.00	250.00								
409+11.00	411+24.00	213.00				62.40				62.40
411+24.00	411+66.00	42.00	96.00	33.00			96.00	33.00		
411+66.00	412+66.00	100.00								
409+33.00	411+55.00	222.00				62.40				62.40
HAMPSHIRE ROAD										
460+24.00	462+54.00	230.00								
460+34.00	462+64.00	230.00								
462+54.00	464+57.00	203.00				62.40				62.40
464+57.00	465+01.00	44.00	100.00	31.00			100.00	31.00		
465+01.00	466+09.00	108.00								
462+64.00	464+85.00	221.00				62.40				62.40
SCHOOL ROAD										
513+55.00	515+85.00	230.00								
513+63.00	515+93.00	230.00								
515+85.00	517+88.00	203.00				62.40				62.40
517+88.00	518+32.00	44.00	100.00	31.00			100.00	31.00		
518+32.00	519+40.00	108.00								
515+93.00	518+16.00	223.00				62.40				62.40
DUROC ROAD										
566+89.00	569+19.00	230.00								
566+97.00	569+27.00	230.00								
569+19.00	571+22.00	203.00				62.40				62.40
571+22.00	571+66.00	44.00	100.00	31.00			100.00	31.00		
571+66.00	572+74.00	108.00								
569+27.00	571+50.00	223.00				62.40				62.40
WOOD STREET										
187+58.00	190+53.00	295.00								
190+53.00	193+89.00	336.00				78.00				78.00
193+89.00	195+84.00	-	413.00	266.00	34.00		413.00	266.00	34.00	
193+77.00	195+40.00	163.00								
WASHINGTON STREET										
226+02.00	229+02.00	300.00								
226+63.00	229+63.00	300.00								
229+63.00	232+71.00	308.00				78.00				78.00
232+71.00	233+08.00	37.00	80.00	15.00			80.00	15.00		
233+08.00	234+10.00	102.00								
229+02.00	232+50.00	348.00				93.60				93.60
232+50.00	234+57.00	-	405.00	263.00	44.00	15.60	405.00	263.00	44.00	15.60
LAKE FORK ROAD										
282+00.00	284+30.00	230.00								
282+17.00	284+47.00	230.00								
284+30.00	286+37.00	207.00				62.40				62.40
286+37.00	286+87.00	50.00	119.00	46.00			119.00	46.00		
286+87.00	287+86.00	99.00								
284+47.00	286+71.00	224.00				62.40				62.40
	RURAL TOTAL =		1980	990	108	1154	1980	990	108	1154

SOUTHBOUND US 51 THERMOPLASTIC PAVEMENT MARKING

STATIONING FROM	STATIONING TO	LENGTH (FOOT)	THERMOPLASTIC PAVEMENT MARKING-LINE 8" (FOOT)	THERMOPLASTIC PAVEMENT MARKING-LINE 12" (FOOT)	THERMOPLASTIC PAVEMENT MARKING-LINE 24" (FOOT)	THERMOPLASTIC PAVEMENT MARKING-LETTERS AND SYMBOLS (SQ YD)	GROOVING FOR RECESSED PAVEMENT MARKING 9" (FOOT(	GROOVING FOR RECESSED PAVEMENT MARKING 13" (FOOT)	GROOVING FOR RECESSED PAVEMENT MARKING 25" (FOOT)	GROOVING FOR RECESSED PAVEMENT MARKING, LETTERS AND SYMBOLS (SQ YD)
SOUTHBOUND US 51			WHTIE	WHITE	WHITE	WHITE				
TURNLANE/INTERSECTION PAVEMENT MARKING										
SHELLABARGER ROAD										
304+18.00	305+43.00	125.00								
305+43.00	307+77.00	234.00				62.40				62.40
307+77.00	310+07.00	230.00								
SPACEMARK ROAD										
330+74.00	332+23.00	149.00								
332+23.00	332+74.00	51.00	117.00	31.00			117.00	31.00		
332+74.00	335+42.00	268.00				78.00				78.00
335+42.00	339+06.00	364.00								
WISE ROAD										
357+68.00	357+93.80	25.80								
STA EQU: 357+93.80 BK=357+91.02 AH										
357+91.02	358+73.00	81.98								
358+73.00	359+17.00	44.00	100.00	32.00			100.00	32.00		
359+17.00	361+20.00	203.00				62.40				62.40
358+89.00	361+12.00	223.00				62.40				62.40
361+12.00	363+42.00	230.00								
361+20.00	363+50.00	230.00								
EMERY ROAD										
411+00.00	412+00.00	100.00								
412+00.00	412+42.00	42.00	96.00	38.00			96.00	38.00		
412+42.00	414+55.00	213.00				62.40				62.40
412+09.00	414+33.00	224.00				62.40				62.40
414+33.00	416+63.00	230.00								
414+55.00	416+85.00	230.00								
HAMPSHIRE ROAD										
464+29.00	465+37.00	108.00								
465+37.00	465+81.00	44.00	100.00	31.00			100.00	31.00		
465+81.00	467+84.00	203.00				62.40				62.40
465+52.00	467+72.00	220.00				62.40				62.40
467+72.00	470+02.00	230.00								
467+84.00	470+14.00	230.00								
SCHOOL ROAD										
517+60.00	518+68.00	108.00								
518+68.00	519+12.00	44.00	100.00	31.00			100.00	31.00		
519+12.00	521+15.00	203.00				62.40				62.40
518+84.00	521+07.00	223.00				62.40				62.40
521+07.00	523+37.00	230.00								
521+15.00	523+45.00	230.00								
DUROC ROAD										
570+95.00	572+02.00	107.00								
572+02.00	572+16.00	14.00	39.00	16.00			39.00	16.00		
572+16.00	572+46.00	30.00	61.00	13.00		15.60	61.00	13.00		15.60
572+46.00	574+01.69	155.69				78.00				78.00
STA EQU: 574+01.69 BK=174+89.59 AH										
174+89.59	175+29.00	39.41				15.60				15.60
175+29.00	175+36.00	7.00				15.60				15.60
175+29.00	177+63.00	234.00								
175+36.00	177+69.00	233.00								
WOOD STREET										
193+62.00	194+66.00	104.00								
194+66.00	195+04.00	38.00	48.00	19.00			48.00	19.00		
195+04.00	198+16.00	312.00				78.00				78.00
198+16.00	201+17.00	301.00								
WASHINGTON STREET										
232+44.00	233+50.00	106.00								
233+50.00	233+87.00	37.00	80.00	15.00			80.00	15.00		
233+87.00	236+96.00	309.00				78.00				78.00
232+01.00	234+08.00	-	405.00	263.00	44.00		405.00	263.00	44.00	
234+08.00	237+56.00	348.00				93.60				93.60
236+96.00	239+96.00	300.00								
237+56.00	240+56.00	300.00								
LAKE FORK ROAD										
286+15.00	287+21.00	106.00								
287+21.00	287+62.00	41.00	93.00	27.00			93.00	27.00		
287+62.00	288+51.00	89.00				31.20				31.20
287+27.00	288+51.00	124.00				31.20				31.20
	RURAL TOTAL =		1239	516	44	1076	1239	516	44	1076

MODEL: Default
FILE NAME: pw:\\ildot-pw.bentley.com:PWIDOT\Documents\IDOT Offices\District 7\Projects\74800\CAD\data\CAD\sheets\0774800-sht-schedule.dgn

USER NAME = Mona.Steffen	DESIGNED -	REVISED -	
	DRAWN -	REVISED -	
PLOT SCALE = 100.0000 ' / in.	CHECKED -	REVISED -	
PLOT DATE = 4/6/2023	DATE -	REVISED -	

STATE OF ILLINOIS
DEPARTMENT OF TRANSPORTATION

SCHEDULE OF QUANTITIES

SCALE: | SHEET 28 OF 29 SHEETS | STA. TO STA.

F.A.P RTE.	SECTION	COUNTY	TOTAL SHEETS	SHEET NO.
322	50,51,52 RS-3	MACON	79	38
		CONTRACT NO. 74800		
		ILLINOIS FED. AID PROJECT		

US 51 THERMOPLASTIC PAVEMENT MARKING SUMMARY						
US 51	THERMOPLASTIC PAVEMENT MARKING-LINE 4" (FOOT)	THERMOPLASTIC PAVEMENT MARKING-LINE 6" (FOOT)	THERMOPLASTIC PAVEMENT MARKING-LINE 8" (FOOT)	THERMOPLASTIC PAVEMENT MARKING-LINE 12" (FOOT)	THERMOPLASTIC PAVEMENT MARKING-LINE 24" (FOOT)	THERMOPLASTIC PAVEMENT MARKING-LETTERS AND SYMBOLS (SQ YD)
URBAN TOTAL	0	4972	0	0	0	0
RURAL TOTAL	382	171022	3219	1506	152	2231
PROJECT TOTAL	382	175994	3219	1506	152	2231

US 51 GROOVING SUMMARY						
US 51	GROOVING FOR RECESSED PAVEMENT MARKING 5" (FOOT)	GROOVING FOR RECESSED PAVEMENT MARKING 7" (FOOT)	GROOVING FOR RECESSED PAVEMENT MARKING 9" (FOOT(	GROOVING FOR RECESSED PAVEMENT MARKING 13" (FOOT)	GROOVING FOR RECESSED PAVEMENT MARKING 25" (FOOT)	GROOVING FOR RECESSED PAVEMENT MARKING, LETTERS AND SYMBOLS (SQ YD)
URBAN TOTAL	0	4972	0	0	0	0
RURAL TOTAL	382	171022	3219	1506	152	2231
PROJECT TOTAL	382	175994	3219	1506	152	2231

PAVEMENT MARKING			
STATIONING		LENGTH	PREFORMED PLASTIC PAVEMENT MARKING, TYPE B-INLAID-LINE 6"
FROM	TO	(FOOT)	(FOOT)
US 51 NORTHBOUND			
265+10.00	273+82.08	872.08	218.02
STA. EQUATION 273+82.08 BK=273+79.78 AH			
273+79.78	277+50.65	370.87	92.72
URBAN		TOTAL =	311
277+50.65	357+93.80	8043.15	2010.79
STA. EQUATION 357+93.80 BK=357+91.02 AH			
357+91.02	424+50.07	6659.05	1664.76
424+50.07	425+54.32	104.25	BRIDGE OMISSION
425+54.32	574+01.69	14847.37	3711.84
STA. EQUATION 574+01.69 BK=174+89.59 AH			
174+89.59	262+10.18	8720.59	2180.15
262+10.18	263+01.35	91.17	BRIDGE OMISSION
263+01.35	288+51.00	2549.65	637.41
RURAL		TOTAL =	10205
US 51 SOUTHBOUND			
265+10.00	273+82.08	872.08	218.02
STA. EQUATION 273+82.08 BK=273+79.78 AH			
273+79.78	277+50.65	370.87	92.72
URBAN		TOTAL =	311
277+50.65	357+93.80	8043.15	2010.79
STA. EQUATION 357+93.80 BK=357+91.02 AH			
357+91.02	423+89.66	6598.64	1649.66
423+89.66	424+93.91	104.25	BRIDGE OMISSION
424+93.91	574+01.69	14907.78	3726.95
STA. EQUATION 574+01.69 BK=174+89.59 AH			
174+89.59	261+83.97	8694.38	2173.60
261+83.97	262+75.14	91.17	BRIDGE OMISSION
262+75.14	288+51.00	2575.86	643.97
RURAL		TOTAL =	10205
URBAN PROJECT TOTAL =			621
RURAL PROJECT TOTAL =			20410
PROJECT TOTAL =			21031

RAISED REFLECTIVE PAVEMENT MARKERS				
STATIONING		LENGTH	RAISED REFLECTIVE PAVEMENT MARKER	RAISED REFLECTIVE PAVEMENT MARKER REMOVAL
FROM	TO	(FOOT)	(EACH)	(EACH)
NORTHBOUND US 51				
265+10.00	273+82.08	872.08	21.80	10.90
STA. EQU 273+82.08 BK=273+79.78 AH				
273+79.78	277+50.65	370.87	9.27	4.64
URBAN TOTAL =			31	16
277+50.65	357+93.80	8043.15	201.08	100.54
STA. EQU 357+93.80 BK=357+91.02 AH				
357+91.02	424+50.07	6659.05	166.48	83.24
424+50.07	425+54.32	104.25	BRIDGE OMISSION	
425+54.32	574+01.69	14847.37	371.18	185.59
STA. EQU 574+01.69 BK=174+89.59 AH				
174+89.59	262+10.18	8720.59	218.01	109.01
262+10.18	263+01.35	91.17	BRIDGE OMISSION	
263+01.35	288+51.00	2549.65	63.74	31.87
NORTHBOUND US 51				
TURNLANE				
302+45.00	304+59.00	214.00	5.35	5.35
328+13.00	331+49.00	336.00	8.40	8.40
355+90.00	355+98.00	8.00	0.20	0.20
355+98.00	357+93.80	195.80	9.79	9.79
STA EQU: 357+93.80 BK=357+91.02 AH				
357+91.02	358+04.00	12.98	0.65	0.65
358+04.00	358+21.00	17.00	0.43	0.43
409+11.00	411+25.00	214.00	5.35	5.35
409+33.00	411+55.00	222.00	5.55	5.55
462+54.00	464+68.00	214.00	5.35	5.35
462+64.00	464+85.00	221.00	5.53	5.53
515+85.00	517+99.00	214.00	5.35	5.35
515+93.00	518+16.00	223.00	5.58	5.58
569+19.00	571+33.00	214.00	5.35	5.35
569+27.00	571+50.00	223.00	5.58	5.58
190+53.00	193+89.00	336.00	8.40	8.40
229+63.00	232+81.00	318.00	7.95	7.95
229+02.00	232+50.00	348.00	8.70	8.70
284+30.00	286+45.00	215.00	5.38	5.38
284+47.00	286+71.00	224.00	5.60	5.60
RURAL TOTAL =			1125	615
SOUTHBOUND US 51				
265+10.00	273+82.08	872.08	21.80	10.90
STA. EQU 273+82.08 BK=273+79.78 AH				
273+79.78	277+50.65	370.87	9.27	4.64
URBAN TOTAL =			31	16
277+50.65	357+93.80	8043.15	201.08	100.54
STA. EQU 357+93.80 BK=357+91.02 AH				
357+91.02	423+89.66	6598.64	164.97	82.48
423+89.66	424+93.91	104.25	BRIDGE OMISSION	
424+93.91	574+01.69	14907.78	372.69	186.35
STA. EQU 574+01.69 BK=174+89.59 AH				
174+89.59	261+83.97	8694.38	217.36	108.68
261+83.97	262+75.14	91.17	BRIDGE OMISSION	
262+75.14	288+51.00	2575.86	64.40	32.20
SOUTHBOUND US 51				
TURNLANE				
305+43.00	307+77.00	234.00	5.85	5.85
332+76.00	335+42.00	266.00	6.65	6.65
359+06.00	361+20.00	214.00	5.35	5.35
358+89.00	361+12.00	223.00	5.58	5.58
412+42.00	414+55.00	213.00	5.33	5.33
412+09.00	414+33.00	224.00	5.60	5.60
465+70.00	467+84.00	214.00	5.35	5.35
465+52.00	467+72.00	220.00	5.50	5.50
519+01.00	521+15.00	214.00	5.35	5.35
518+84.00	521+07.00	223.00	5.58	5.58
572+16.00	572+35.00	19.00	0.48	0.48
572+35.00	574+01.69	166.69	8.33	8.33
STA EQU: 574+01.69 BK=174+89.59 AH				
174+89.59	175+29.00	39.41	1.97	1.97
175+29.00	175+36.00	7.00	0.18	0.18
195+01.00	198+16.00	315.00	7.88	7.88
233+77.00	236+96.00	319.00	7.98	7.98
234+08.00	237+56.00	348.00	8.70	8.70
287+55.00	288+51.00	96.00	2.40	2.40
287+27.00	288+51.00	124.00	3.10	3.10
RURAL TOTAL =			1118	607
URBAN PROJECT TOTAL =			62	32
RURAL PROJECT TOTAL =			2243	1222
PROJECT TOTAL =			2305	1254

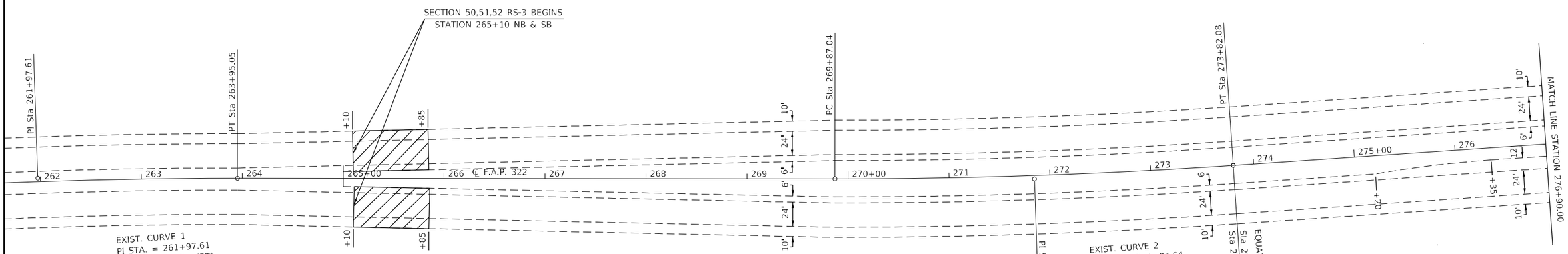

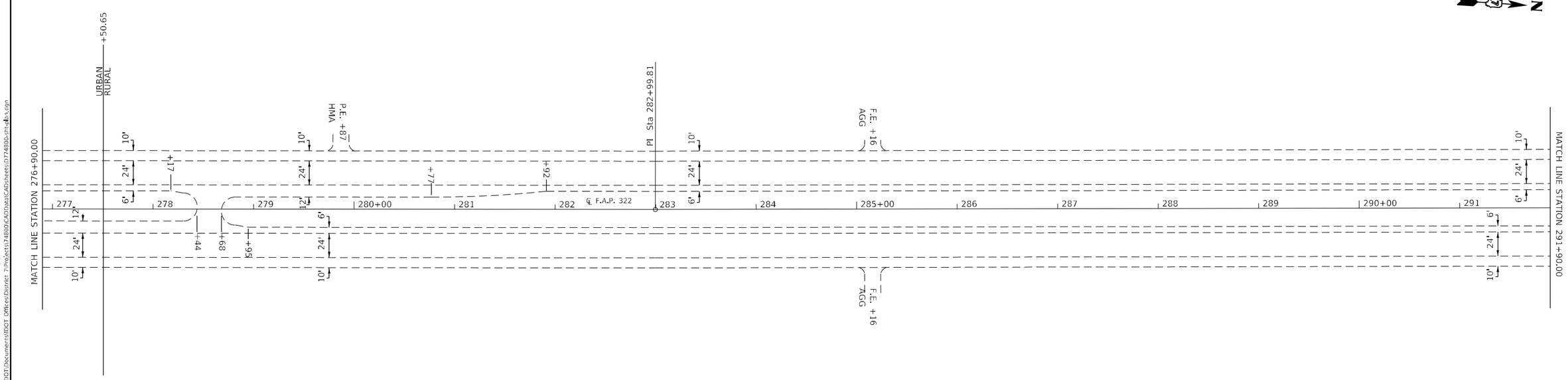

USER NAME = Mona.Steffen	DESIGNED -	REVISED -	
	DRAWN -	REVISED -	
PLOT SCALE = 100.0000 ' / in.	CHECKED -	REVISED -	
PLOT DATE = 4/6/2023	DATE -	REVISED -	

STATE OF ILLINOIS
DEPARTMENT OF TRANSPORTATION

US 51 PLAN SHEETS

SCALE: | SHEET 1 OF 16 SHEETS | STA. | TO STA.

F.A.P RTE.	SECTION	COUNTY	TOTAL SHEETS	SHEET NO.
322	50,51,52 RS-3	MACON	79	40
		CONTRACT NO. 74800		
	ILLINOIS	FED. AID PROJECT		

MODEL: Default
FILE NAME: pw:\\ildot-pw.bentley.com:PWIDOT\Documents\IDOT Offices\District 7\Projects\74800\CADData\CADsheets\074800-sht-plan.dgn

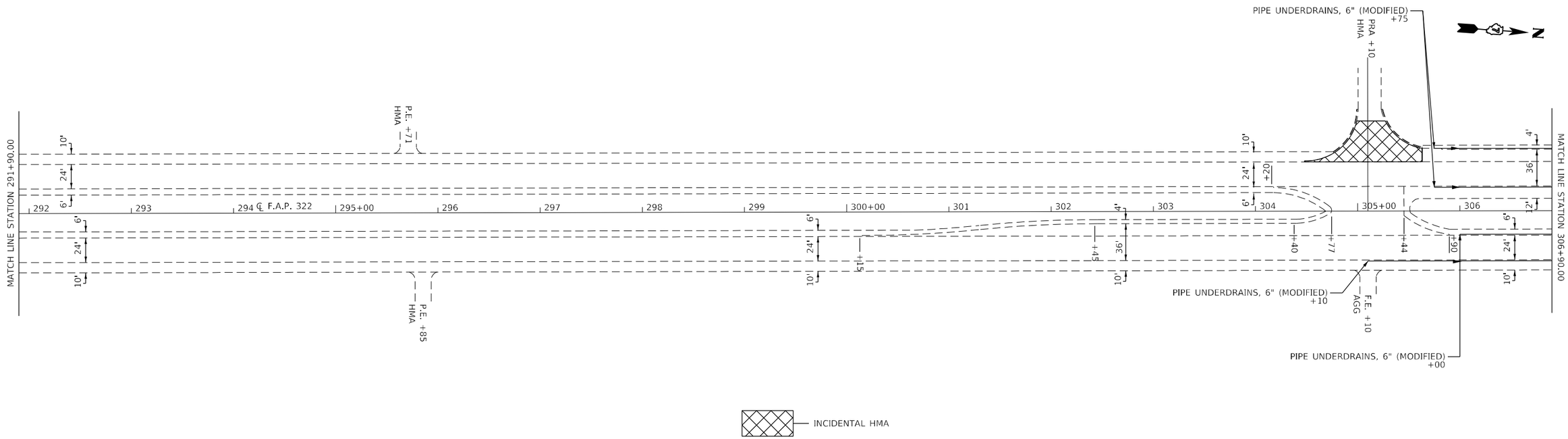

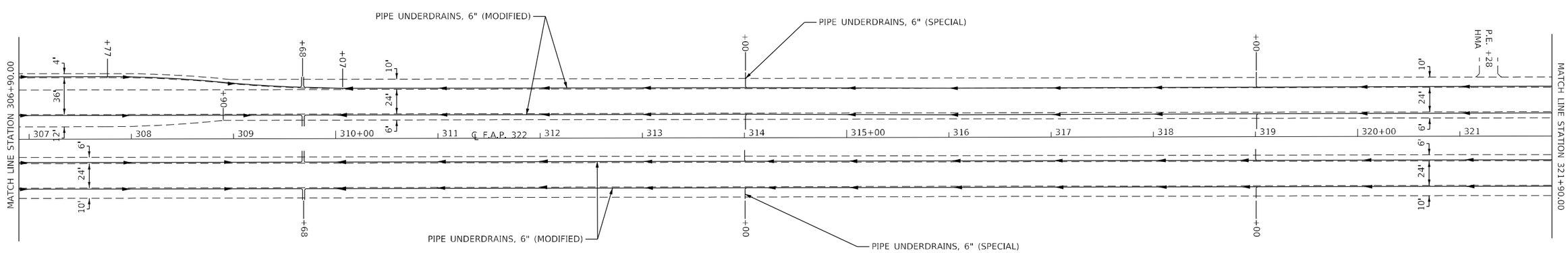

USER NAME = Mona.Steffen	DESIGNED -	REVISED -	
	DRAWN -	REVISED -	
PLOT SCALE = 100.0000 ' / in.	CHECKED -	REVISED -	
PLOT DATE = 4/6/2023	DATE -	REVISED -	

STATE OF ILLINOIS
DEPARTMENT OF TRANSPORTATION

US 51 PLAN SHEETS

SCALE: | SHEET 2 OF 16 SHEETS | STA. | TO STA.

F.A.P RTE.	SECTION	COUNTY	TOTAL SHEETS	SHEET NO.
322	50,51,52 RS-3	MACON	79	41
		CONTRACT NO. 74800		
	ILLINOIS	FED. AID PROJECT		

MODEL: Default
FILE NAME: pw:\\ildot-pw.bentley.com:PWIDOT\Documents\IDOT Offices\District 7\Projects\74800\CADData\CADsheets\074800-sht-plan.dgn

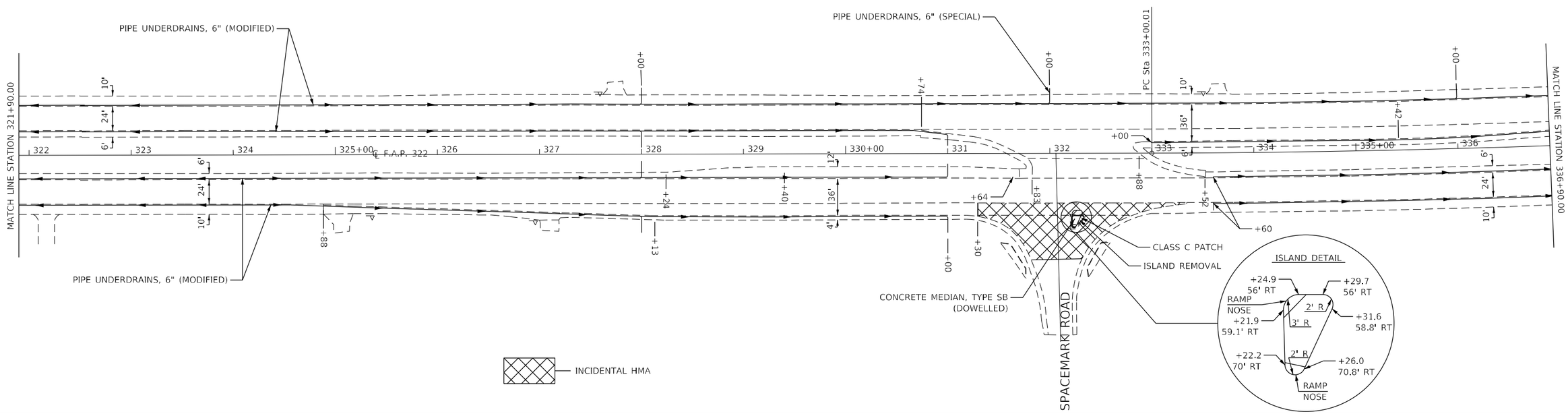

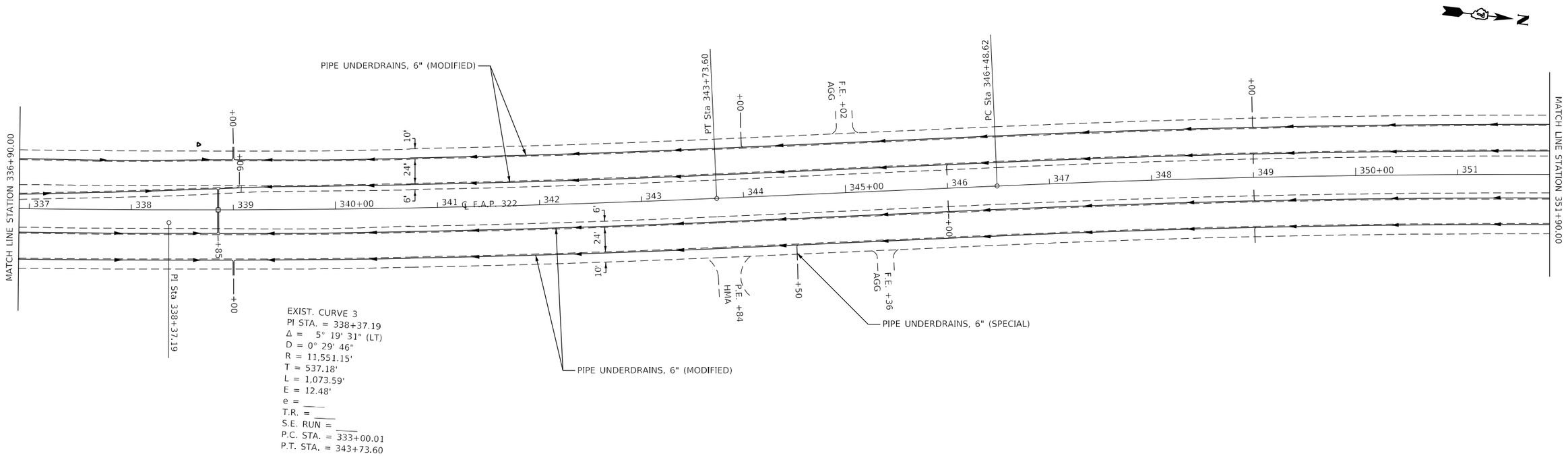

MODEL: Default
FILE NAME: pw:\\ildot-pw.bentley.com:PWIDOT\Documents\IDOT Offices\District 7\Projects\74800\CAD\Data\CAD sheets\074800-sht-plan.dgn

USER NAME = Mona,Steffen	DESIGNED -	REVISED -	
	DRAWN -	REVISED -	
PLOT SCALE = 100.0000 ' / in.	CHECKED -	REVISED -	
PLOT DATE = 4/6/2023	DATE -	REVISED -	

STATE OF ILLINOIS
DEPARTMENT OF TRANSPORTATION

US 51 PLAN SHEETS

SCALE: | SHEET 3 OF 16 SHEETS | STA. | TO STA.

F.A.P RTE.	SECTION	COUNTY	TOTAL SHEETS	SHEET NO.
322	50,51,52 RS-3	MACON	79	42
		CONTRACT NO. 74800		
		ILLINOIS	FED. AID PROJECT	

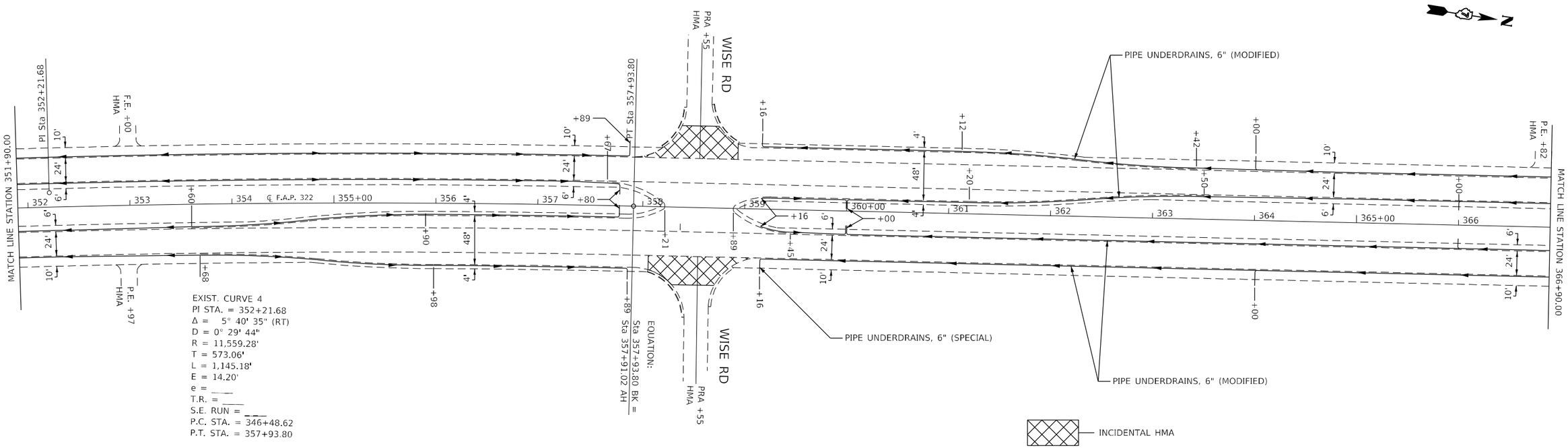

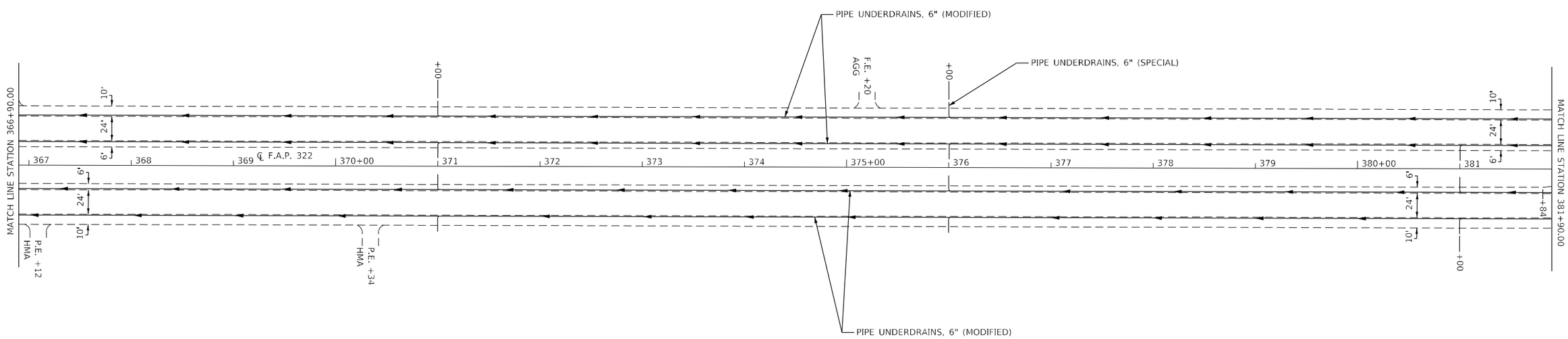

USER NAME = Mona.Steffen	DESIGNED -	REVISED -	
	DRAWN -	REVISED -	
PLOT SCALE = 100.0000 ' / in.	CHECKED -	REVISED -	
PLOT DATE = 4/6/2023	DATE -	REVISED -	

STATE OF ILLINOIS
DEPARTMENT OF TRANSPORTATION

US 51 PLAN SHEETS

SCALE: | SHEET 4 OF 16 SHEETS | STA. | TO STA.

F.A.P RTE.	SECTION	COUNTY	TOTAL SHEETS	SHEET NO.
322	50,51,52 RS-3	MACON	79	43

CONTRACT NO. 74800

ILLINOIS | FED. AID PROJECT

MODEL: Default
FILE NAME: pw:\\ildot-pw.bentley.com:PWIDOT\Documents\IDOT Offices\District 7\Projects\74800\CADData\CADsheets\0774800-sht-plan.dgn

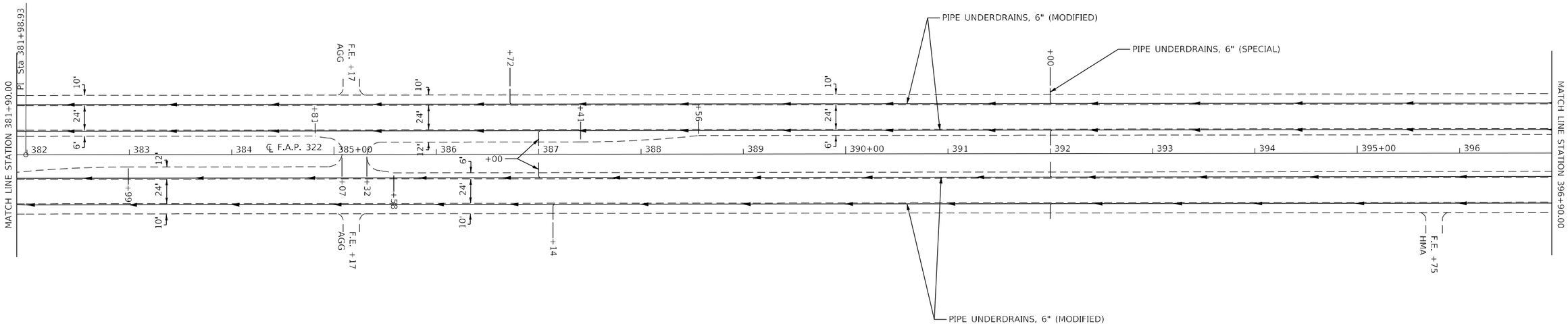

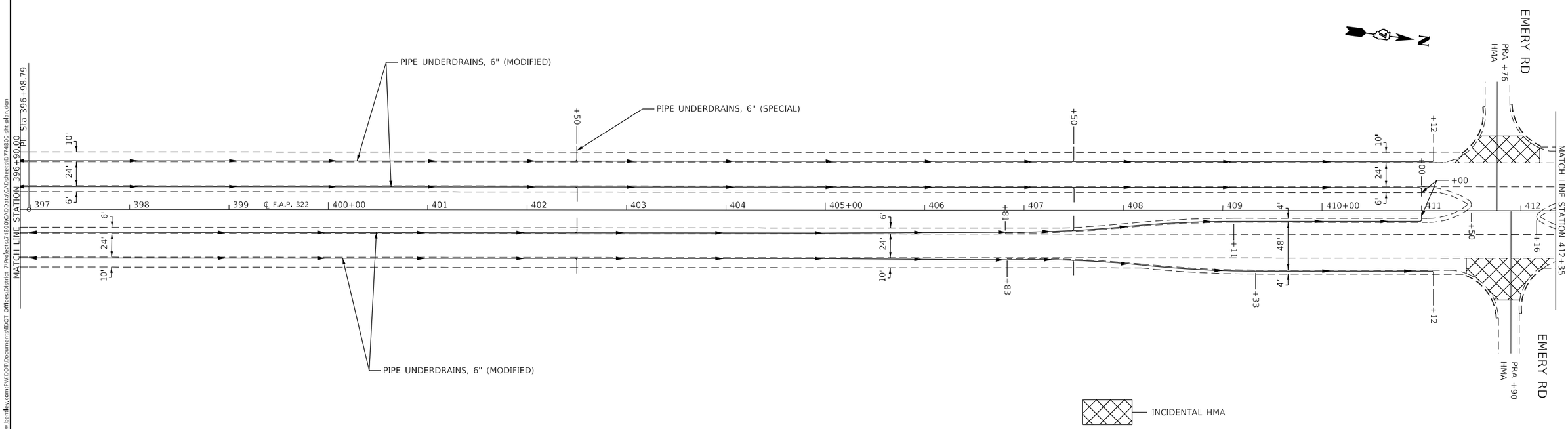

MODEL: Default
FILE NAME: pw:\\ildot-pw.bentley.com:PWIDOT\Documents\IDOT Offices\District 7\Projects\74800\CADData\CADsheets\0774800-sht-4bs.dgn

USER NAME = Mona,Steffen	DESIGNED -	REVISED -	
	DRAWN -	REVISED -	
PLOT SCALE = 100.0000 ' / in.	CHECKED -	REVISED -	
PLOT DATE = 4/6/2023	DATE -	REVISED -	

STATE OF ILLINOIS
DEPARTMENT OF TRANSPORTATION

US 51 PLAN SHEETS

SCALE: | SHEET 5 OF 16 SHEETS | STA. | TO STA.

F.A.P RTE.	SECTION	COUNTY	TOTAL SHEETS	SHEET NO.
322	50,51,52 RS-3	MACON	79	44

CONTRACT NO. 74800

ILLINOIS | FED. AID PROJECT

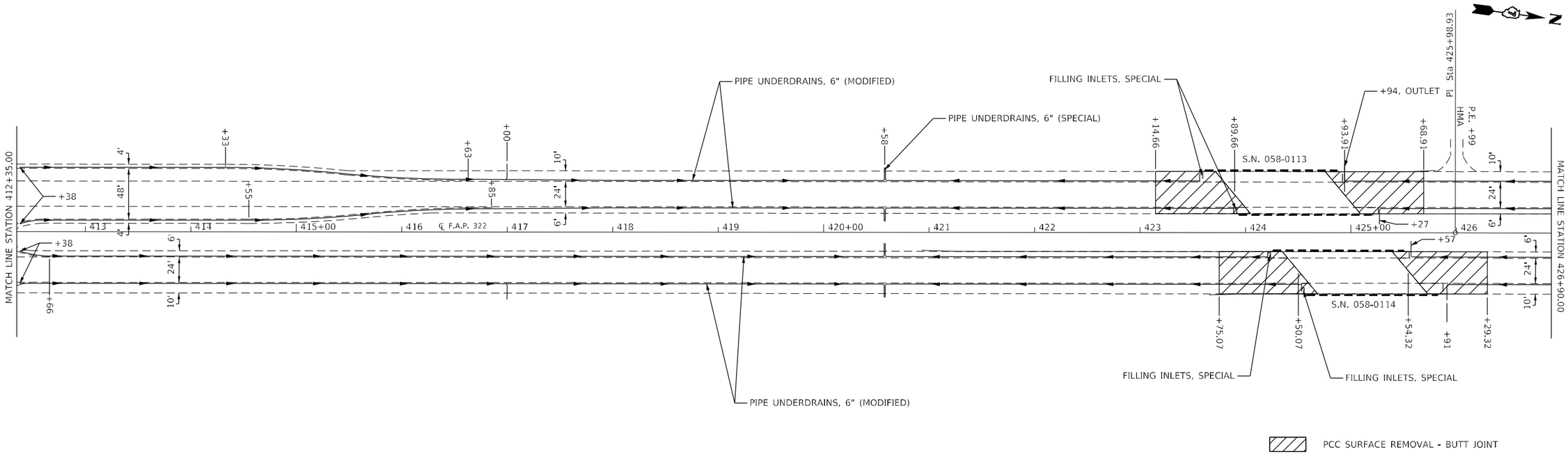

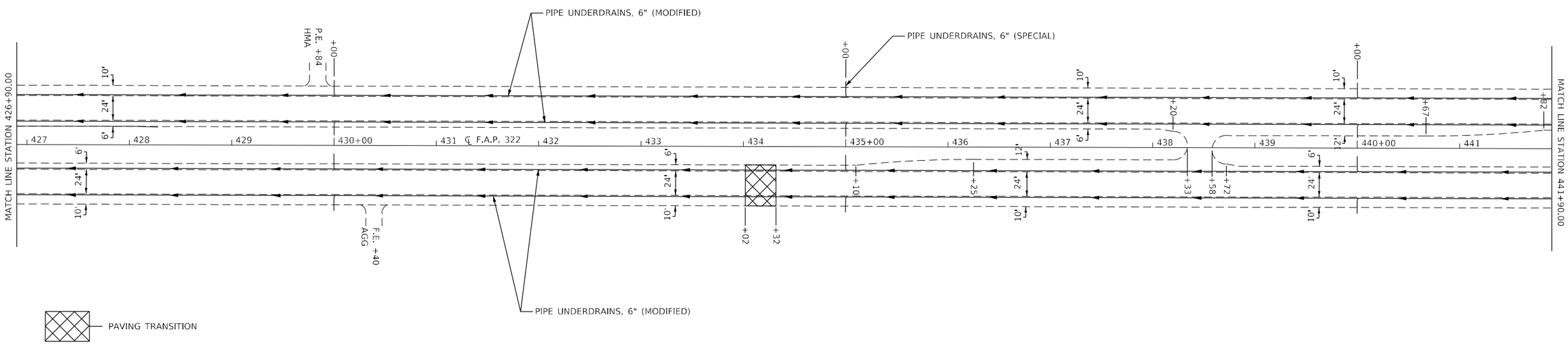

USER NAME = Mona.Steffen	DESIGNED -	REVISED -	
	DRAWN -	REVISED -	
PLOT SCALE = 100.0000 ' / in.	CHECKED -	REVISED -	
PLOT DATE = 4/6/2023	DATE -	REVISED -	

STATE OF ILLINOIS
DEPARTMENT OF TRANSPORTATION

US 51 PLAN SHEETS

SCALE: | SHEET 6 OF 16 SHEETS | STA. | TO STA.

F.A.P RTE.	SECTION	COUNTY	TOTAL SHEETS	SHEET NO.
322	50,51,52 RS-3	MACON	79	45

CONTRACT NO. 74800

ILLINOIS | FED. AID PROJECT

MODEL: Default
FILE NAME: pw:\\ildot-pw.bentley.com:PWIDOT\Documents\IDOT Offices\District 7\Projects\74800\CADData\CADsheets\0774800-sht-plan.dgn

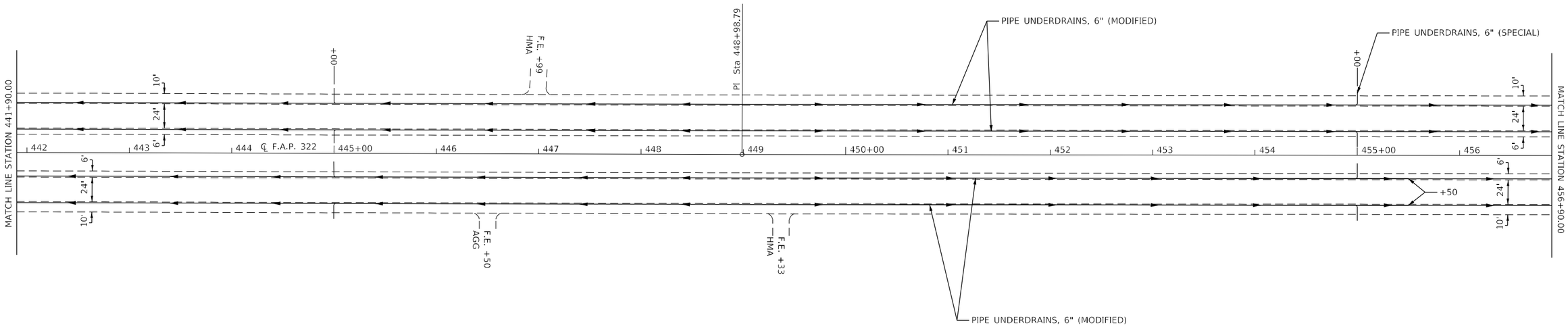

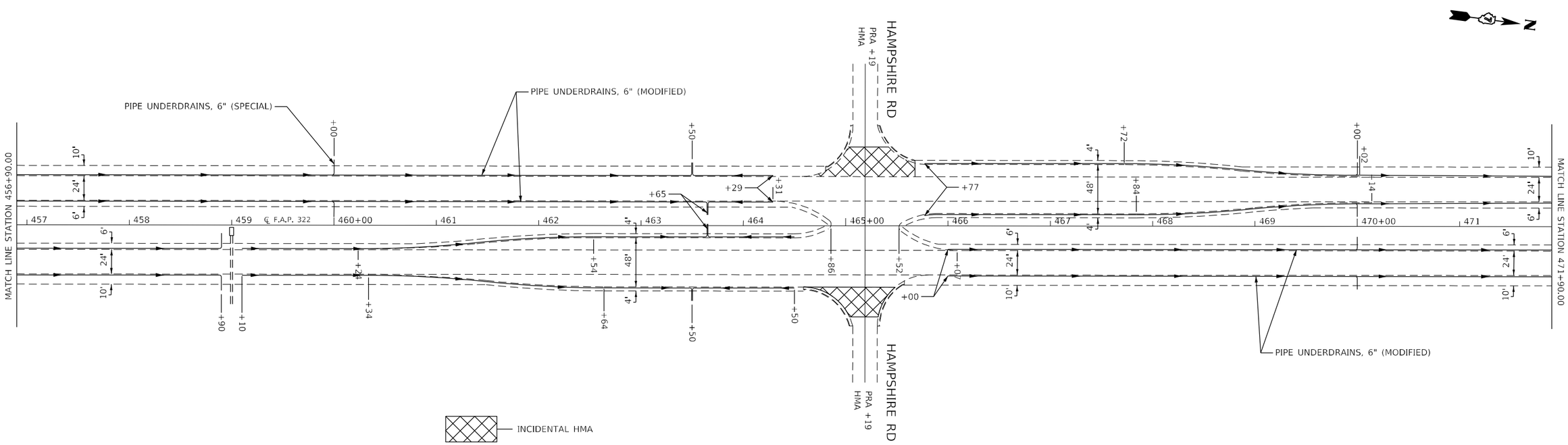

USER NAME = Mona,Steffen	DESIGNED -	REVISED -	
	DRAWN -	REVISED -	
PLOT SCALE = 100.0000 ' / in.	CHECKED -	REVISED -	
PLOT DATE = 4/6/2023	DATE -	REVISED -	

STATE OF ILLINOIS
DEPARTMENT OF TRANSPORTATION

US 51 PLAN SHEETS

SCALE: | SHEET 7 OF 16 SHEETS | STA. | TO STA.

F.A.P RTE.	SECTION	COUNTY	TOTAL SHEETS	SHEET NO.
322	50,51,52 RS-3	MACON	79	46

CONTRACT NO. 74800

ILLINOIS | FED. AID PROJECT

MODEL: Default
FILE NAME: pw:\\ildot-pw.bentley.com:PWIDOT\Documents\IDOT Offices\District 7\Projects\74800\CADData\CADsheets\0774800-sht-plan.dgn

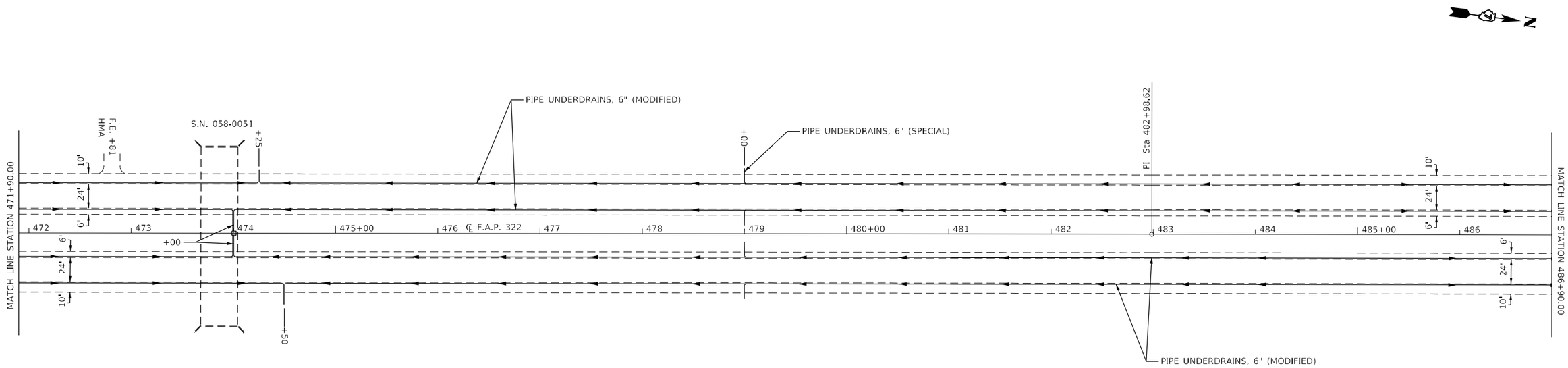

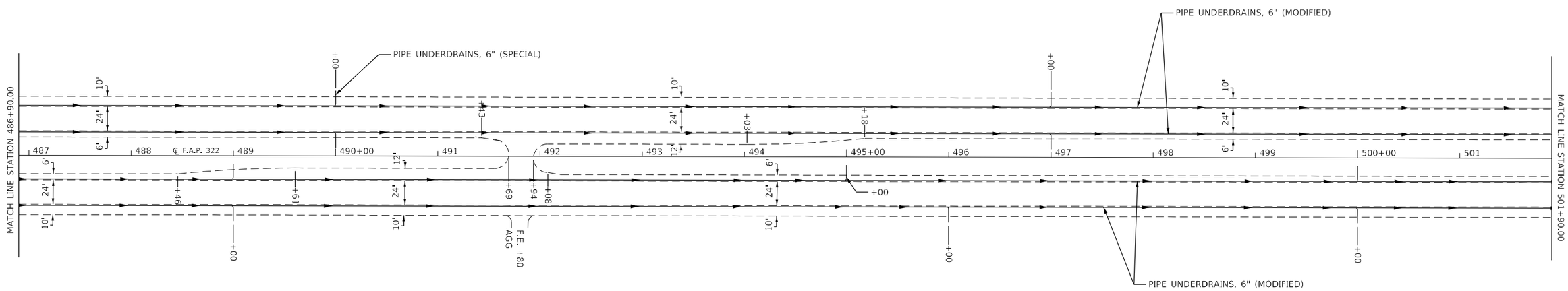

MODEL: Default
FILE NAME: pw:\\ildot-pw.bentley.com:PWIDOT\Documents\IDOT Offices\District 7\Projects\74800\CADData\CADsheets\074800-sht-plan.dgn

USER NAME = Mona,Steffen	DESIGNED -	REVISED -	
	DRAWN -	REVISED -	
PLOT SCALE = 100.0000 ' / in.	CHECKED -	REVISED -	
PLOT DATE = 4/6/2023	DATE -	REVISED -	

STATE OF ILLINOIS
DEPARTMENT OF TRANSPORTATION

US 51 PLAN SHEETS

SCALE: | SHEET 8 OF 16 SHEETS | STA. | TO STA.

F.A.P RTE.	SECTION	COUNTY	TOTAL SHEETS	SHEET NO.
322	50,51,52 RS-3	MACON	79	47
		CONTRACT NO. 74800		
	ILLINOIS	FED. AID PROJECT		

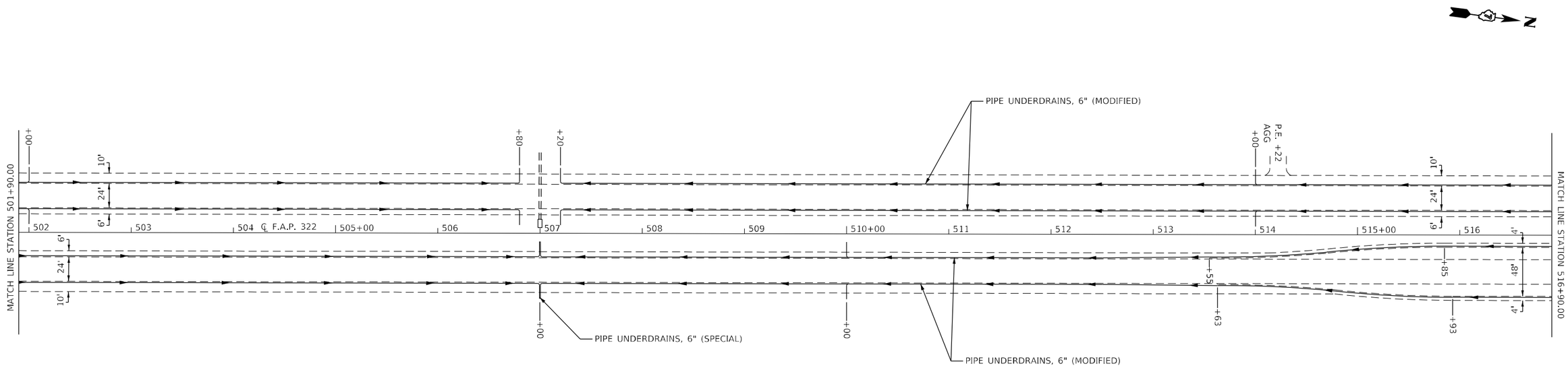

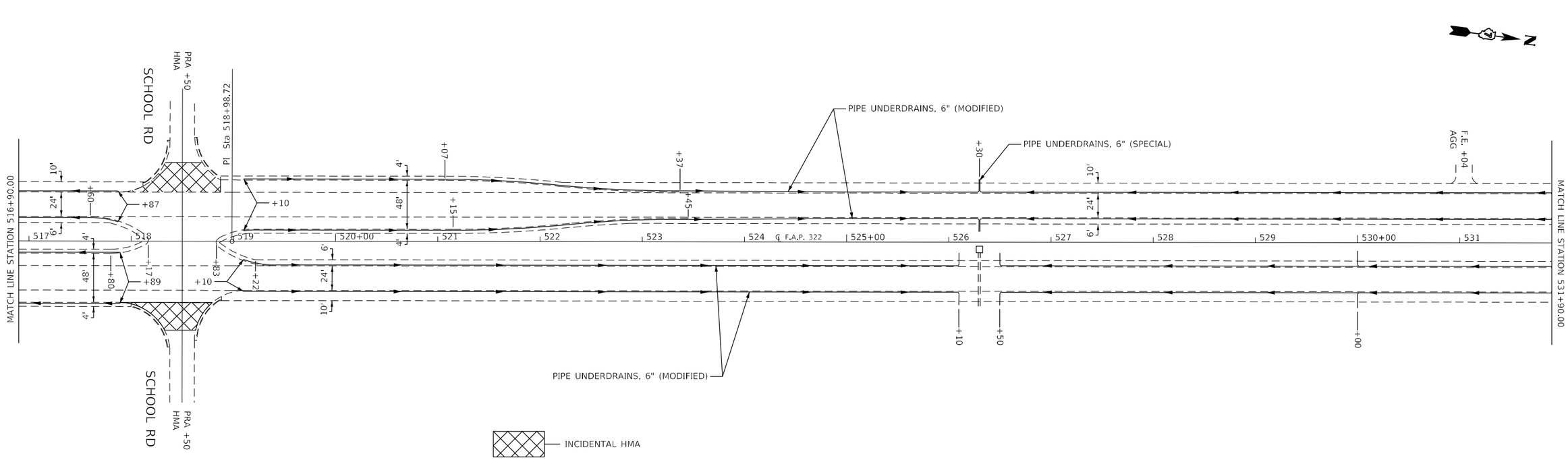

USER NAME = Mona.Steffen	DESIGNED -	REVISED -	
	DRAWN -	REVISED -	
PLOT SCALE = 100.0000 ' / in.	CHECKED -	REVISED -	
PLOT DATE = 4/6/2023	DATE -	REVISED -	

STATE OF ILLINOIS
DEPARTMENT OF TRANSPORTATION

US 51 PLAN SHEETS

SCALE: | SHEET 9 OF 16 SHEETS | STA. | TO STA.

F.A.P RTE.	SECTION	COUNTY	TOTAL SHEETS	SHEET NO.
322	50,51,52 RS-3	MACON	79	48

CONTRACT NO. 74800

ILLINOIS | FED. AID PROJECT

MODEL: Default
FILE NAME: pw:\\ildot-pw.bentley.com:PWIDOT\Documents\IDOT Offices\District 7\Projects\74800\CADData\CADsheets\0774800-sht-plan.dgn

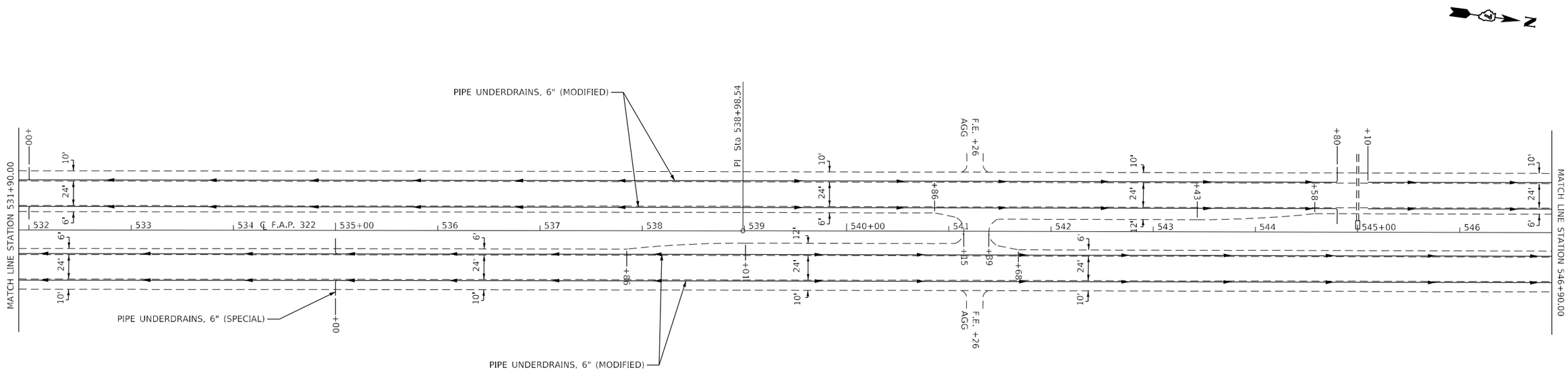

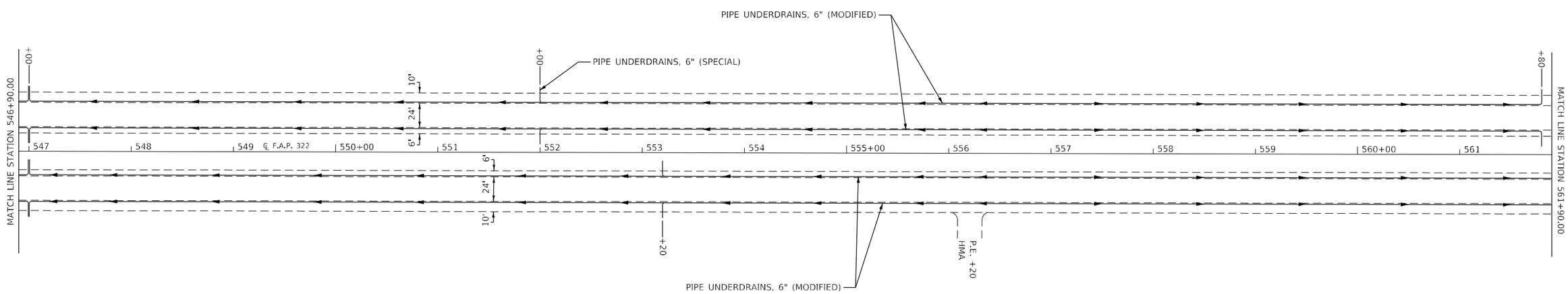

USER NAME = Mona,Steffen	DESIGNED -	REVISED -	
	DRAWN -	REVISED -	
PLOT SCALE = 100.0000 ' / in.	CHECKED -	REVISED -	
PLOT DATE = 4/6/2023	DATE -	REVISED -	

STATE OF ILLINOIS
DEPARTMENT OF TRANSPORTATION

US 51 PLAN SHEETS

SCALE: | SHEET 10 OF 16 SHEETS | STA. | TO STA.

F.A.P RTE.	SECTION	COUNTY	TOTAL SHEETS	SHEET NO.
322	50,51,52 RS-3	MACON	79	49
		CONTRACT NO. 74800		
	ILLINOIS	FED. AID PROJECT		

MODEL: Default
FILE NAME: pw:\\ildot-pw.bentley.com:PWIDOT\Documents\IDOT Offices\District 7\Projects\74800\CADData\CADsheets\0774800-sht-plan.dgn

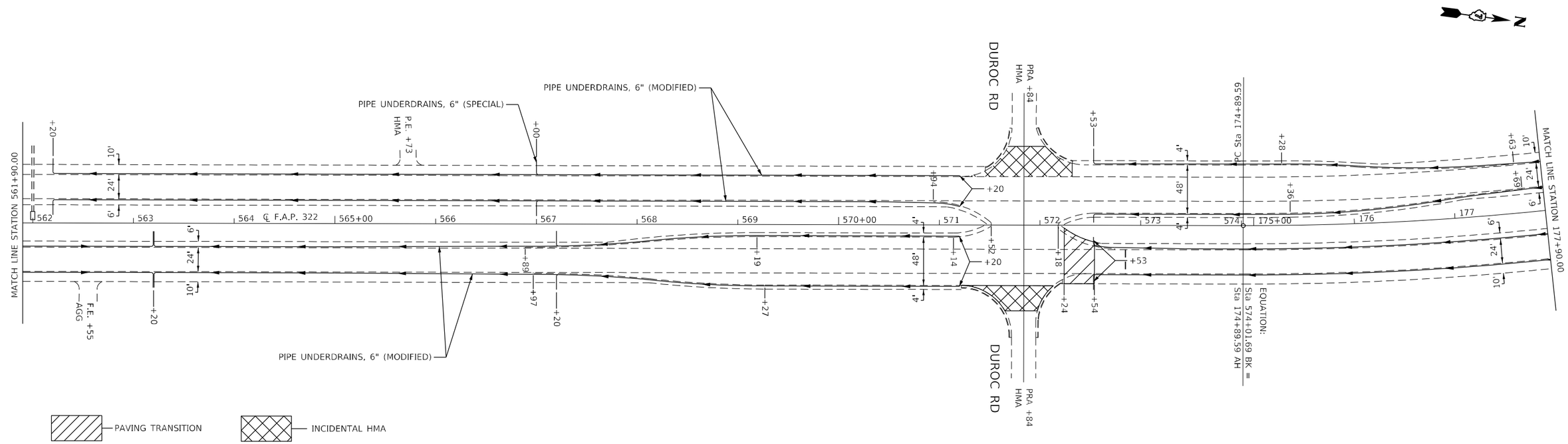

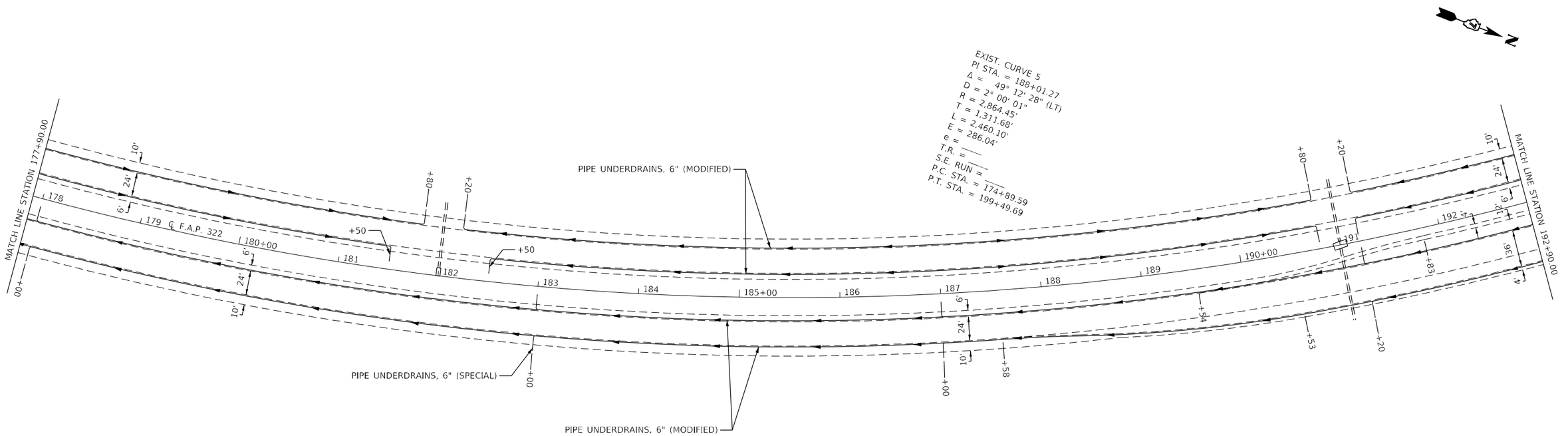

USER NAME = Mona.Steffen	DESIGNED -	REVISED -	STATE OF ILLINOIS DEPARTMENT OF TRANSPORTATION	US 51 PLAN SHEETS	F.A.P RTE.	SECTION	COUNTY	TOTAL SHEETS / SHEET NO.
	DRAWN -	REVISED -			322	50,51,52 RS-3	MACON	79 / 50
PLOT SCALE = 100.0000 ' / in.	CHECKED -	REVISED -					CONTRACT NO. 74800	
PLOT DATE = 4/6/2023	DATE -	REVISED -		SCALE: SHEET 11 OF 16 SHEETS STA. TO STA.		ILLINOIS	FED. AID PROJECT	

MODEL: Default
FILE NAME: pw:\\ildot-pw.bentley.com:PWIDOT\Documents\IDOT Offices\District 7\Projects\74800\CAD\Dgns\CADsheets\074800-sht-plan.dgn

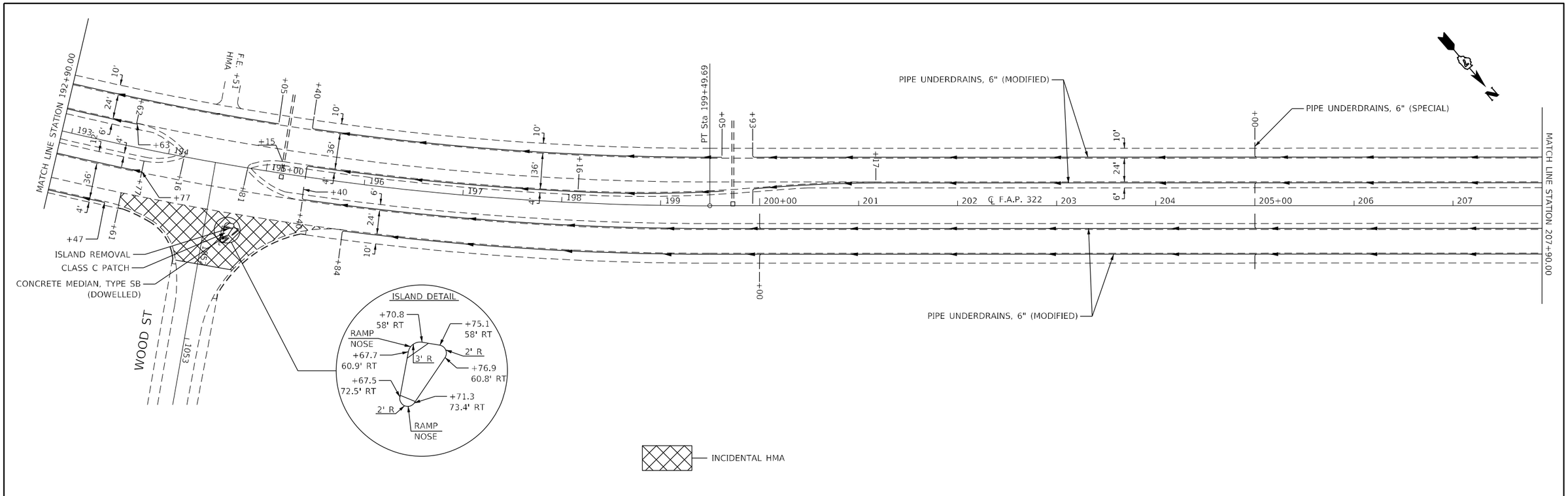

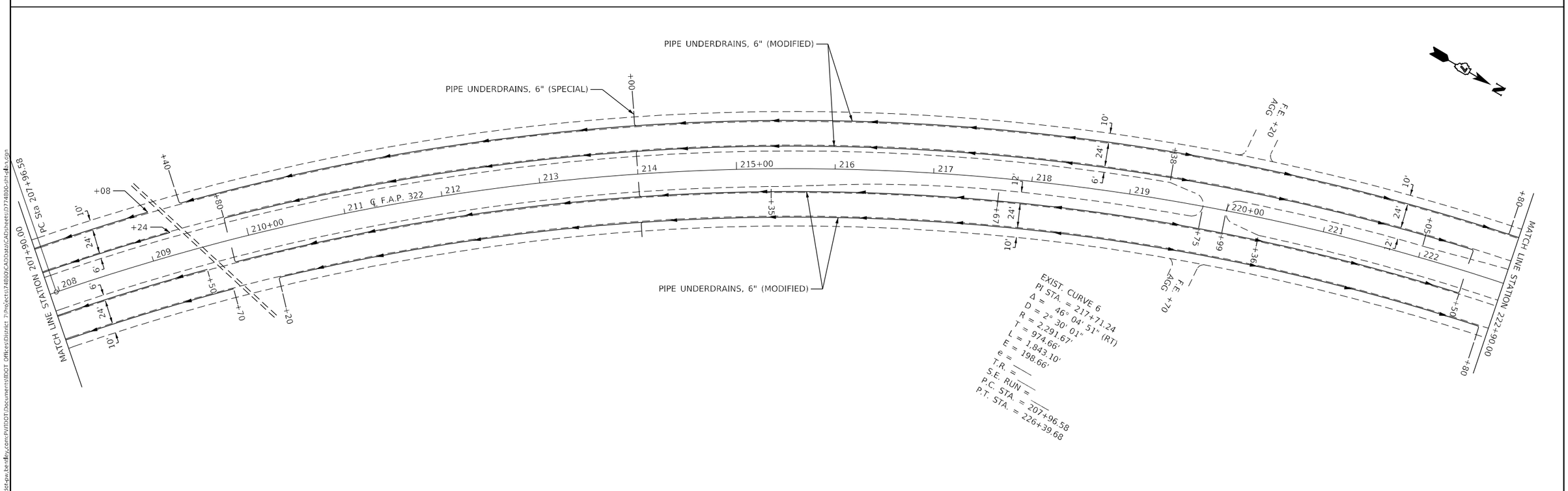

USER NAME = Mona,Steffen	DESIGNED -	REVISED -	
	DRAWN -	REVISED -	
PLOT SCALE = 100.0000 ' / in.	CHECKED -	REVISED -	
PLOT DATE = 4/6/2023	DATE -	REVISED -	

STATE OF ILLINOIS
DEPARTMENT OF TRANSPORTATION

US 51 PLAN SHEETS

SCALE: | SHEET 12 OF 16 SHEETS | STA. | TO STA.

F.A.P RTE.	SECTION	COUNTY	TOTAL SHEETS	SHEET NO.
322	50,51,52 RS-3	MACON	79	51

CONTRACT NO. 74800

ILLINOIS | FED. AID PROJECT

MODEL: Default
FILE NAME: pw:\\ildot-pw.bentley.com:PWIDOT\Documents\IDOT Offices\District 7\Projects\74800\CADData\CADsheets\0774800-sht-plan.dgn

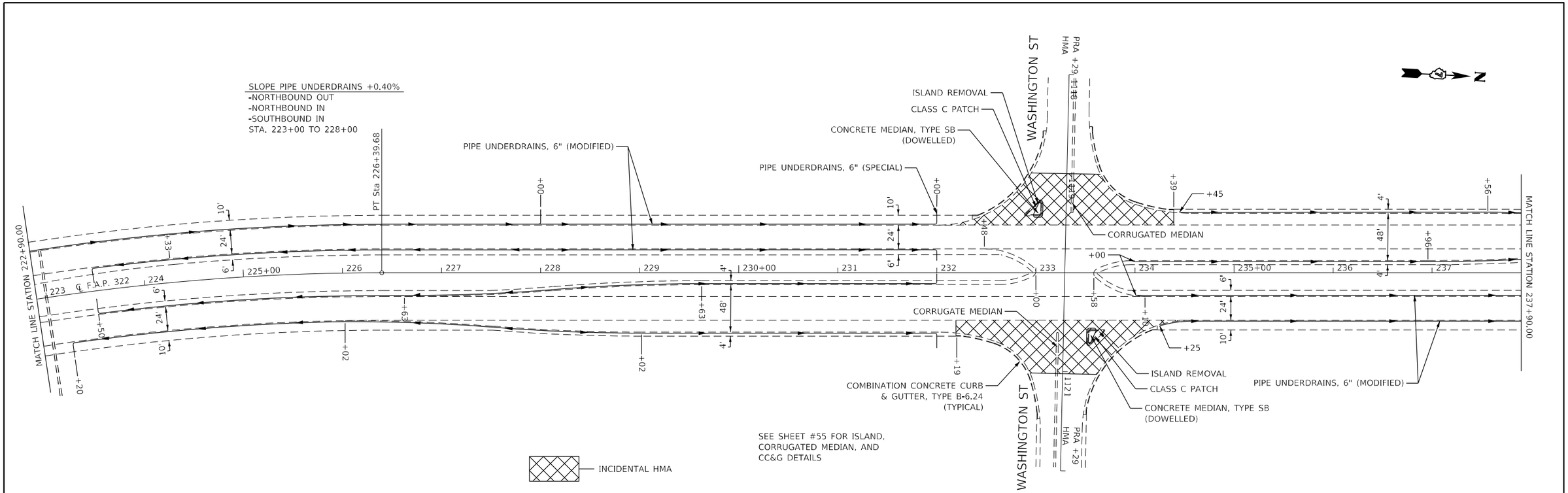

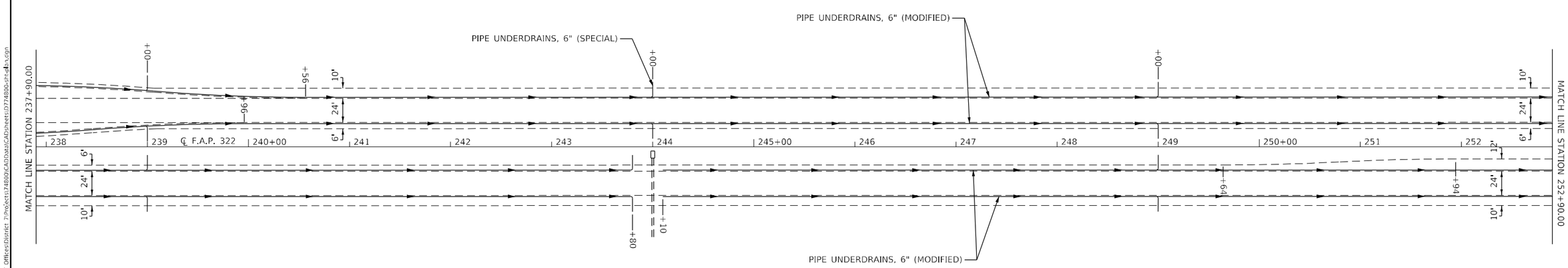

USER NAME = Mona.Steffen	DESIGNED -	REVISED -	
	DRAWN -	REVISED -	
PLOT SCALE = 100.0000 ' / in.	CHECKED -	REVISED -	
PLOT DATE = 4/6/2023	DATE -	REVISED -	

STATE OF ILLINOIS
DEPARTMENT OF TRANSPORTATION

US 51 PLAN SHEETS

SCALE: | SHEET 13 OF 16 SHEETS | STA. | TO STA.

F.A.P RTE.	SECTION	COUNTY	TOTAL SHEETS	SHEET NO.
322	50,51,52 RS-3	MACON	79	52

CONTRACT NO. 74800

ILLINOIS | FED. AID PROJECT

MODEL: Default
FILE NAME: pw:\\ildot-pw.bentley.com:PWIDOT\Documents\IDOT Offices\District 7\Projects\74800\CADData\CADsheets\0774800-sht-plan.dgn

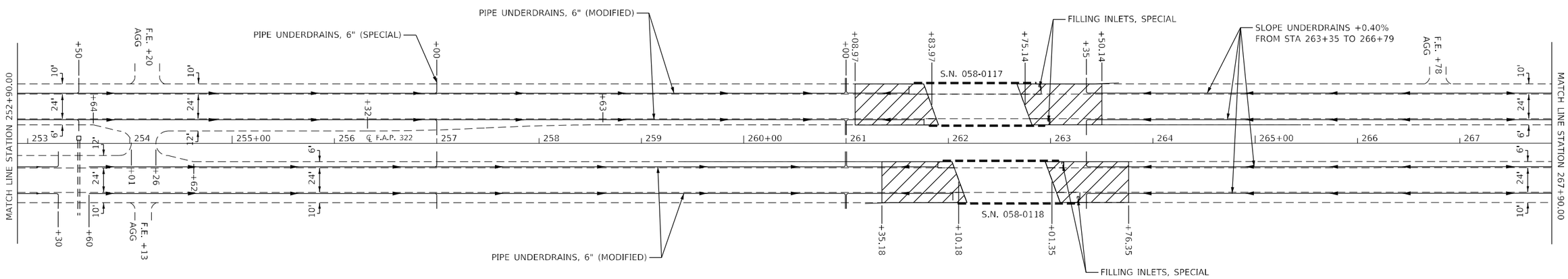

PCC SURFACE REMOVAL - BUTT JOINT

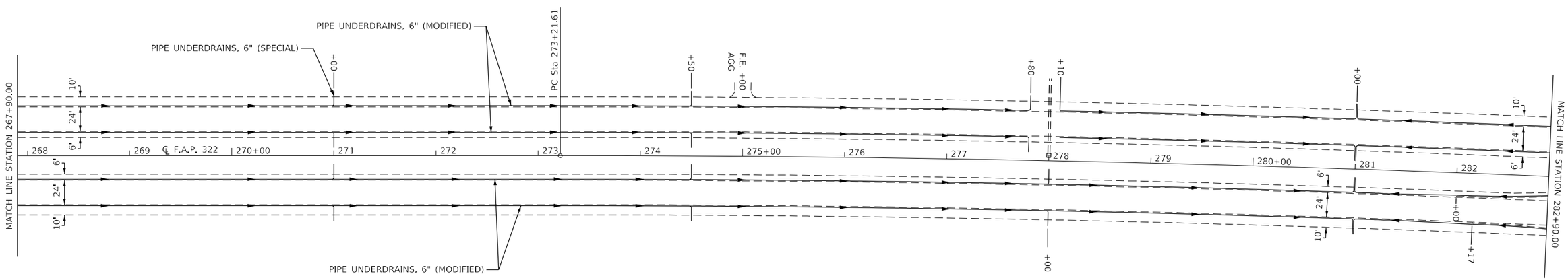

USER NAME = Mona.Steffen	DESIGNED -	REVISED -	**STATE OF ILLINOIS DEPARTMENT OF TRANSPORTATION**	**US 51 PLAN SHEETS**	F.A.P RTE.	SECTION	COUNTY	TOTAL SHEETS	SHEET NO.
	DRAWN -	REVISED -			322	50,51,52 RS-3	MACON	79	53
PLOT SCALE = 100.0000 ' / in.	CHECKED -	REVISED -					CONTRACT NO. 74800		
PLOT DATE = 4/6/2023	DATE -	REVISED -		SCALE: SHEET 14 OF 16 SHEETS STA. TO STA.			ILLINOIS	FED. AID PROJECT	

MODEL: Default
FILE NAME: pw:\\ildot-pw.bentley.com:PWIDOT\Documents\IDOT Offices\District 7\Projects\74800\CADData\CADsheets\074800-sht-plan.dgn

EXIST. CURVE 7
PI STA. = 288+35.17
Δ = 7° 30' 33" (RT)
D = 0° 14' 54"
R = 23,063.87'
T = 1,513.56'
L = 3,022.78'
E = 49.61'
e = ____
T.R. = ____
S.E. RUN = ____
P.C. STA. = 273+21.61
P.T. STA. = 303+44.39

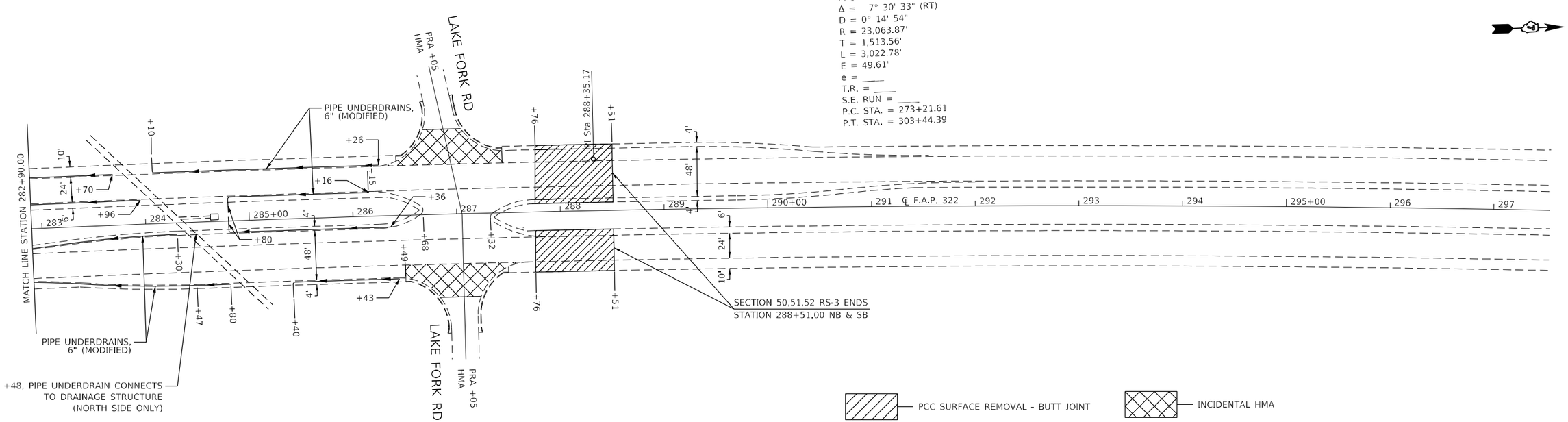

SEC. 3, T18N, R2E, 3RD P.M.

MODEL: Default
FILE NAME: pw:\\ildot-pw.bentley.com:PWIDOT\Documents\IDOT Offices\District 7\Projects\74800\CADData\CADsheets\0774800-sht-plan.dgn

USER NAME = Mona,Steffen	DESIGNED -	REVISED -	
	DRAWN -	REVISED -	
PLOT SCALE = 100.0000 ' / in.	CHECKED -	REVISED -	
PLOT DATE = 4/6/2023	DATE -	REVISED -	

STATE OF ILLINOIS
DEPARTMENT OF TRANSPORTATION

US 51 PLAN SHEETS

SCALE: | SHEET 15 OF 16 SHEETS | STA. | TO STA.

F.A.P RTE.	SECTION	COUNTY	TOTAL SHEETS	SHEET NO.
322	50,51,52 RS-3	MACON	79	54
		CONTRACT NO. 74800		
	ILLINOIS	FED. AID PROJECT		

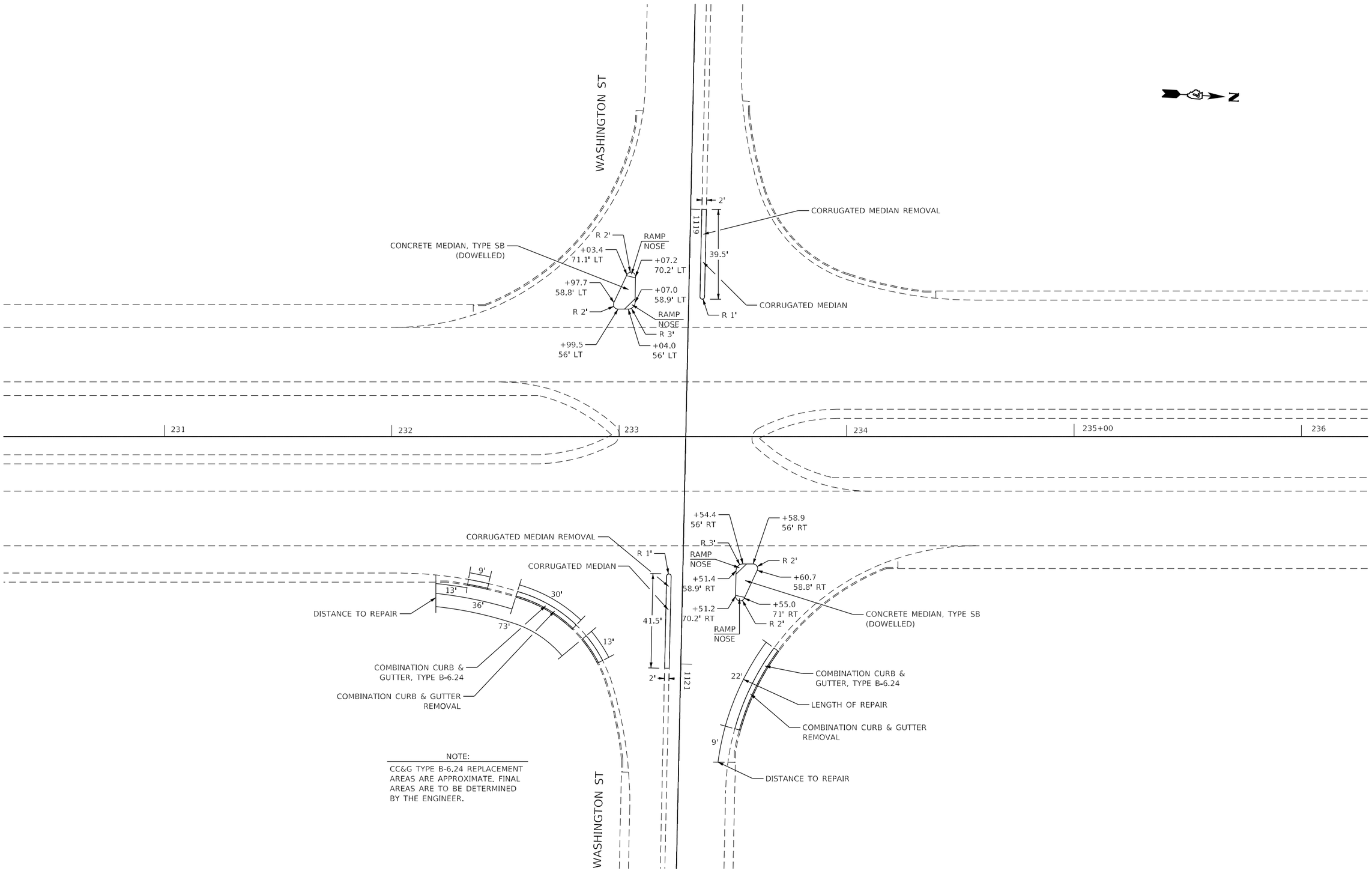

NOTE:

CC&G TYPE B-6.24 REPLACEMENT AREAS ARE APPROXIMATE. FINAL AREAS ARE TO BE DETERMINED BY THE ENGINEER.

MODEL: Default
FILE NAME: pw:\\ildot-pw.bentley.com:PWIDOT\Documents\IDOT Offices\District 7\Projects\74800\CADData\CADsheets\D774800-sht-plan.dgn

USER NAME = Mona.Steffen	DESIGNED -	REVISED -	
	DRAWN -	REVISED -	
PLOT SCALE = 40.0000 ' / in.	CHECKED -	REVISED -	
PLOT DATE = 4/6/2023	DATE -	REVISED -	

STATE OF ILLINOIS
DEPARTMENT OF TRANSPORTATION

US 51 PLAN SHEETS

SCALE: | SHEET 16 OF 16 SHEETS | STA. | TO STA.

F.A.P RTE.	SECTION	COUNTY	TOTAL SHEETS	SHEET NO.
322	50,51,52 RS-3	MACON	79	55
		CONTRACT NO. 74800		
		ILLINOIS	FED. AID PROJECT	

PAVEMENT MARKING LEGEND

2	4" (100) SOLID (YELLOW)	10A	6" (150) SOLID (YELLOW)
6	4" (100) DOUBLE YELLOW (WIDE)	11	24" (600) STOP BAR (WHITE)
7	6" (150) SKIP-DASH (WHITE)	12	8" (200) SOLID (WHITE)
9	12" (300) DIAGONAL (WHITE)	14	6" (150) DOTTED
10	6" (150) SOLID (WHITE)		

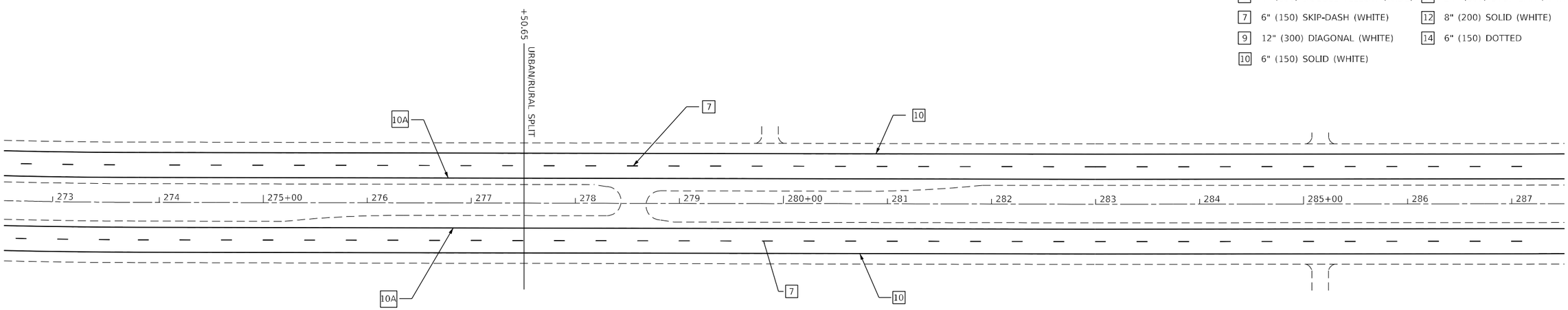

NOTES:
ALL PAVEMENT MARKING IS GROOVED IN THERMOPLASTIC, EXCEPT THE 6" SKIP DASH CENTERLINE SHALL BE PERFORMED PLASTIC, TYPE B-INLAID.

TYPICAL PAVEMENT MARKING AT CROSSOVERS.

PAVEMENT MARKING LEGEND

2	4" (100) SOLID (YELLOW)	10A	6" (150) SOLID (YELLOW)
6	4" (100) DOUBLE YELLOW (WIDE)	11	24" (600) STOP BAR (WHITE)
7	6" (150) SKIP-DASH (WHITE)	12	8" (200) SOLID (WHITE)
9	12" (300) DIAGONAL (WHITE)	14	6" (150) DOTTED
10	6" (150) SOLID (WHITE)		

NOTES:
ALL PAVEMENT MARKING IS GROOVED IN THERMOPLASTIC, EXCEPT THE 6" SKIP DASH CENTERLINE SHALL BE PERFORMED PLASTIC, TYPE B-INLAID.

TURN LANE ISLANDS ARE COMPRISED OF 8" WHITE PERIMETER LINES AND 12" WHITE INTERIOR LINES. CORNERS ARE 2' RADII

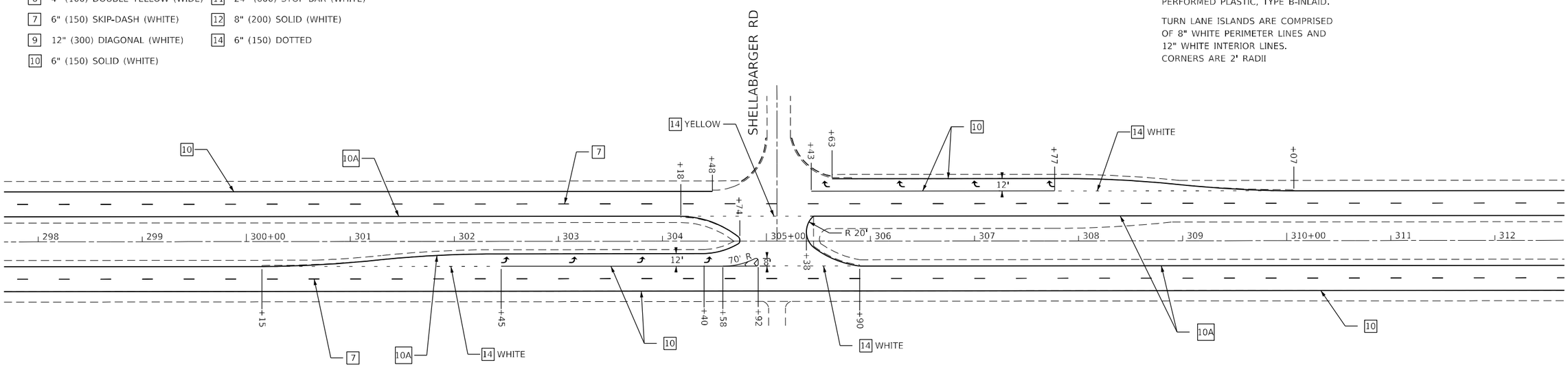

MODEL: Default
FILE NAME: pw:\\ildot-pw.bentley.com:PWIDOT\Documents\IDOT Offices\District 7\Projects\74800\CADData\CADsheets\0774800-sht-pmk.dgn

USER NAME = Mona,Steffen	DESIGNED -	REVISED -	
	DRAWN -	REVISED -	
PLOT SCALE = 100.0000 ' / in.	CHECKED -	REVISED -	
PLOT DATE = 4/6/2023	DATE -	REVISED -	

STATE OF ILLINOIS
DEPARTMENT OF TRANSPORTATION

US 51 PAVEMENT MARKING DETAILS

SCALE: | SHEET 1 OF 9 SHEETS | STA. | TO STA.

F.A.P RTE.	SECTION	COUNTY	TOTAL SHEETS	SHEET NO.
322	50, 51, 52 RS-3	MACON	79	56
		CONTRACT NO. 74800		
		ILLINOIS	FED. AID PROJECT	

PAVEMENT MARKING LEGEND

2	4" (100) SOLID (YELLOW)	10A	6" (150) SOLID (YELLOW)
6	4" (100) DOUBLE YELLOW (WIDE)	11	24" (600) STOP BAR (WHITE)
7	6" (150) SKIP-DASH (WHITE)	12	8" (200) SOLID (WHITE)
9	12" (300) DIAGONAL (WHITE)	14	6" (150) DOTTED
10	6" (150) SOLID (WHITE)		

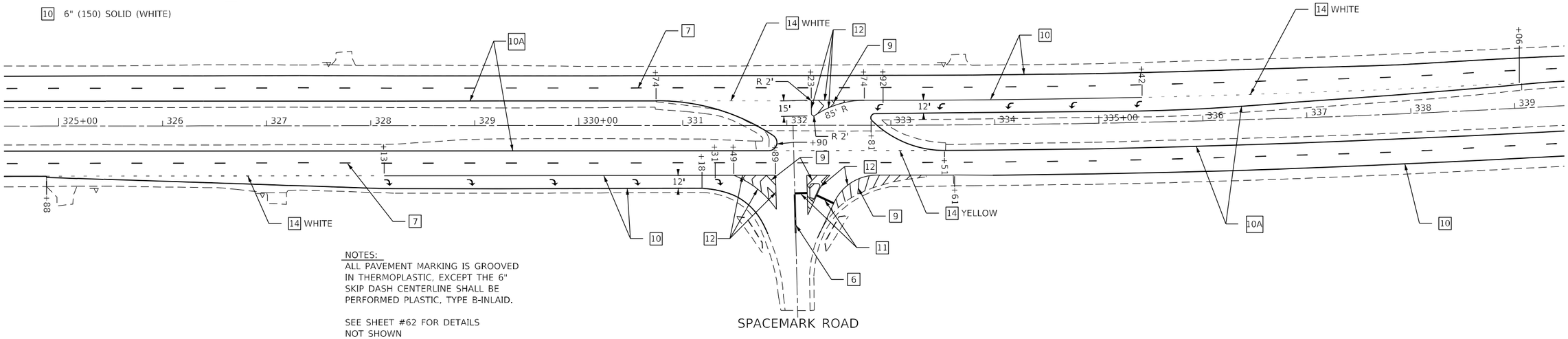

NOTES:
ALL PAVEMENT MARKING IS GROOVED IN THERMOPLASTIC, EXCEPT THE 6" SKIP DASH CENTERLINE SHALL BE PERFORMED PLASTIC, TYPE B-INLAID.

SEE SHEET #62 FOR DETAILS NOT SHOWN

SPACEMARK ROAD

PAVEMENT MARKING LEGEND

2	4" (100) SOLID (YELLOW)	10A	6" (150) SOLID (YELLOW)
6	4" (100) DOUBLE YELLOW (WIDE)	11	24" (600) STOP BAR (WHITE)
7	6" (150) SKIP-DASH (WHITE)	12	8" (200) SOLID (WHITE)
9	12" (300) DIAGONAL (WHITE)	14	6" (150) DOTTED
10	6" (150) SOLID (WHITE)		

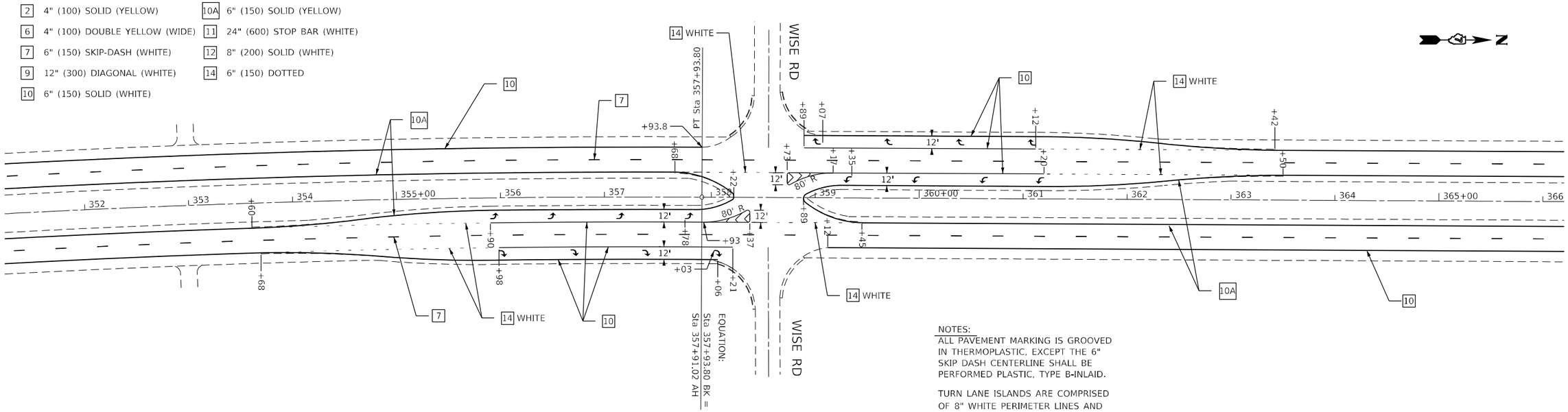

NOTES:
ALL PAVEMENT MARKING IS GROOVED IN THERMOPLASTIC, EXCEPT THE 6" SKIP DASH CENTERLINE SHALL BE PERFORMED PLASTIC, TYPE B-INLAID.

TURN LANE ISLANDS ARE COMPRISED OF 8" WHITE PERIMETER LINES AND 12" WHITE INTERIOR LINES.
CORNERS ARE 2' RADII

MODEL: Default
FILE NAME: pw:\\ildot-pw.bentley.com:PWIDOT\Documents\IDOT Offices\District 7\Projects\74800\CAD\Data\CAD\Sheets\0774800-sht-pmk.dgn

USER NAME = Mona.Steffen	DESIGNED -	REVISED -	
	DRAWN -	REVISED -	
PLOT SCALE = 100.0000 ' / in.	CHECKED -	REVISED -	
PLOT DATE = 4/6/2023	DATE -	REVISED -	

STATE OF ILLINOIS
DEPARTMENT OF TRANSPORTATION

US 51 PAVEMENT MARKING DETAILS

SCALE: | SHEET 2 OF 9 SHEETS | STA. | TO STA.

F.A.P RTE.	SECTION	COUNTY	TOTAL SHEETS	SHEET NO.
322	50, 51, 52 RS-3	MACON	79	57
		CONTRACT NO. 74800		
	ILLINOIS	FED. AID PROJECT		

PAVEMENT MARKING LEGEND

2	4" (100) SOLID (YELLOW)	10A	6" (150) SOLID (YELLOW)
6	4" (100) DOUBLE YELLOW (WIDE)	11	24" (600) STOP BAR (WHITE)
7	6" (150) SKIP-DASH (WHITE)	12	8" (200) SOLID (WHITE)
9	12" (300) DIAGONAL (WHITE)	14	6" (150) DOTTED
10	6" (150) SOLID (WHITE)		

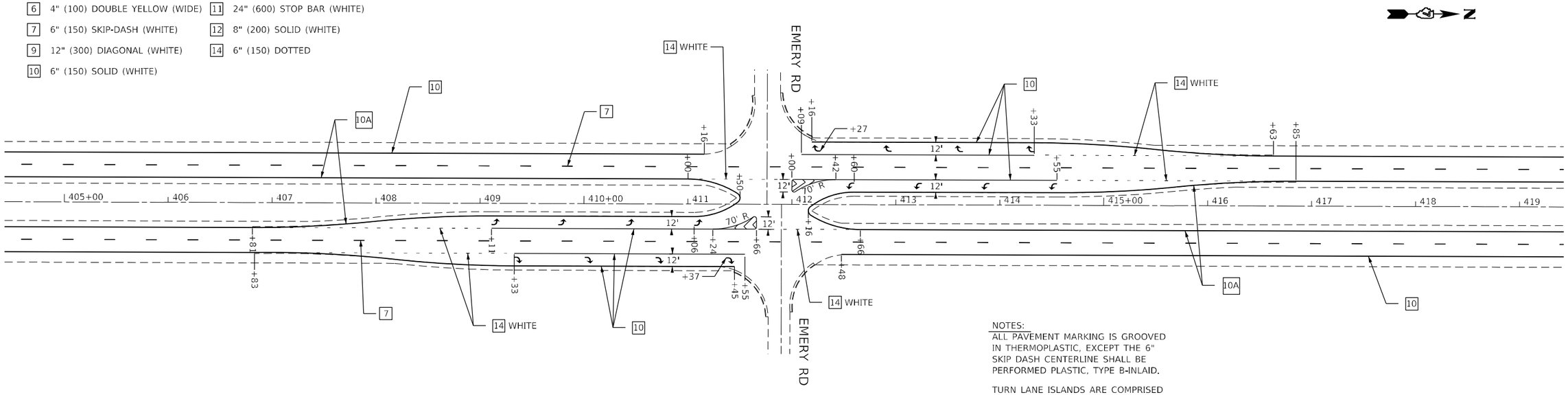

NOTES:
ALL PAVEMENT MARKING IS GROOVED IN THERMOPLASTIC, EXCEPT THE 6" SKIP DASH CENTERLINE SHALL BE PERFORMED PLASTIC, TYPE B-INLAID.

TURN LANE ISLANDS ARE COMPRISED OF 8" WHITE PERIMETER LINES AND 12" WHITE INTERIOR LINES. CORNERS ARE 2' RADII.

PAVEMENT MARKING LEGEND

2	4" (100) SOLID (YELLOW)	10A	6" (150) SOLID (YELLOW)
6	4" (100) DOUBLE YELLOW (WIDE)	11	24" (600) STOP BAR (WHITE)
7	6" (150) SKIP-DASH (WHITE)	12	8" (200) SOLID (WHITE)
9	12" (300) DIAGONAL (WHITE)	14	6" (150) DOTTED
10	6" (150) SOLID (WHITE)		

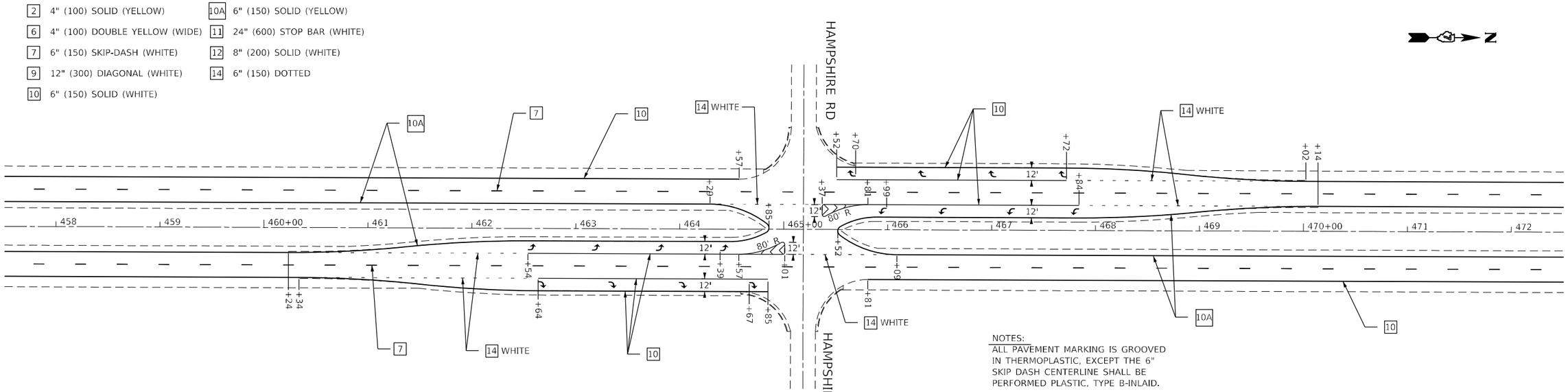

NOTES:
ALL PAVEMENT MARKING IS GROOVED IN THERMOPLASTIC, EXCEPT THE 6" SKIP DASH CENTERLINE SHALL BE PERFORMED PLASTIC, TYPE B-INLAID.

TURN LANE ISLANDS ARE COMPRISED OF 8" WHITE PERIMETER LINES AND 12" WHITE INTERIOR LINES. CORNERS ARE 2' RADII

MODEL: Default
FILE NAME: pw:\\illiot-pw.bentley.com:PWIDOT\Documents\IDOT Offices\District 7\Projects\74800\CADData\CADsheets\D774800-sht-pmk.dgn

USER NAME = Mona.Steffen	DESIGNED -	REVISED -	
	DRAWN -	REVISED -	
PLOT SCALE = 100.0000 ' / in.	CHECKED -	REVISED -	
PLOT DATE = 4/6/2023	DATE -	REVISED -	

STATE OF ILLINOIS
DEPARTMENT OF TRANSPORTATION

US 51 PAVEMENT MARKING DETAILS

SCALE: | SHEET 3 OF 9 SHEETS | STA. | TO STA.

F.A.P RTE.	SECTION	COUNTY	TOTAL SHEETS	SHEET NO.
322	50, 51, 52 RS-3	MACON	79	58
		CONTRACT NO. 74800		
		ILLINOIS	FED. AID PROJECT	

PAVEMENT MARKING LEGEND

2	4" (100) SOLID (YELLOW)	10A	6" (150) SOLID (YELLOW)
6	4" (100) DOUBLE YELLOW (WIDE)	11	24" (600) STOP BAR (WHITE)
7	6" (150) SKIP-DASH (WHITE)	12	8" (200) SOLID (WHITE)
9	12" (300) DIAGONAL (WHITE)	14	6" (150) DOTTED
10	6" (150) SOLID (WHITE)		

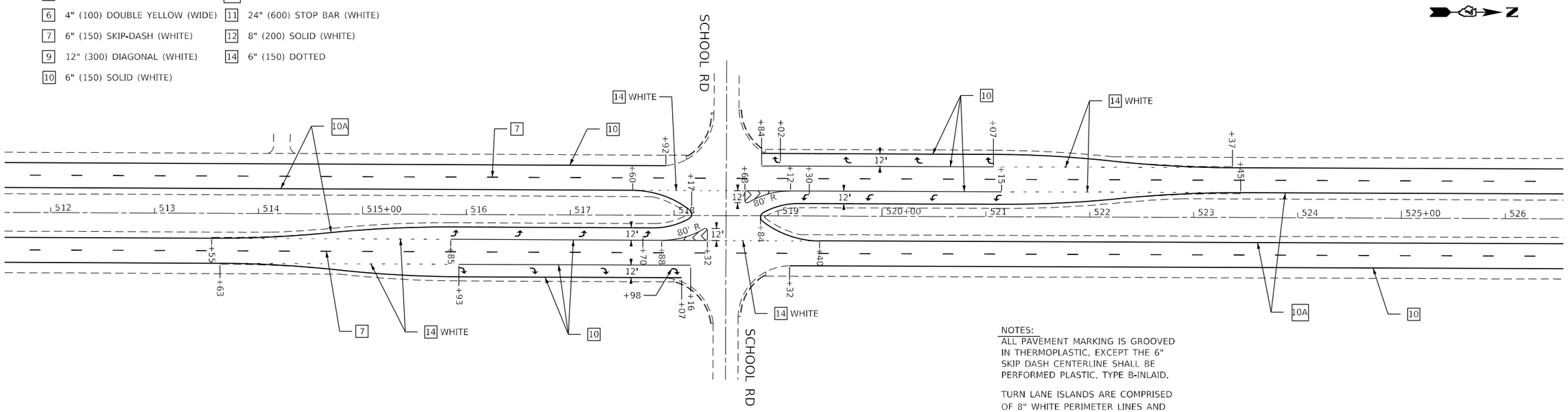

NOTES:
ALL PAVEMENT MARKING IS GROOVED IN THERMOPLASTIC, EXCEPT THE 6" SKIP DASH CENTERLINE SHALL BE PERFORMED PLASTIC, TYPE B-INLAID.

TURN LANE ISLANDS ARE COMPRISED OF 8" WHITE PERIMETER LINES AND 12" WHITE INTERIOR LINES. CORNERS ARE 2' RADII.

PAVEMENT MARKING LEGEND

2	4" (100) SOLID (YELLOW)	10A	6" (150) SOLID (YELLOW)
6	4" (100) DOUBLE YELLOW (WIDE)	11	24" (600) STOP BAR (WHITE)
7	6" (150) SKIP-DASH (WHITE)	12	8" (200) SOLID (WHITE)
9	12" (300) DIAGONAL (WHITE)	14	6" (150) DOTTED
10	6" (150) SOLID (WHITE)		

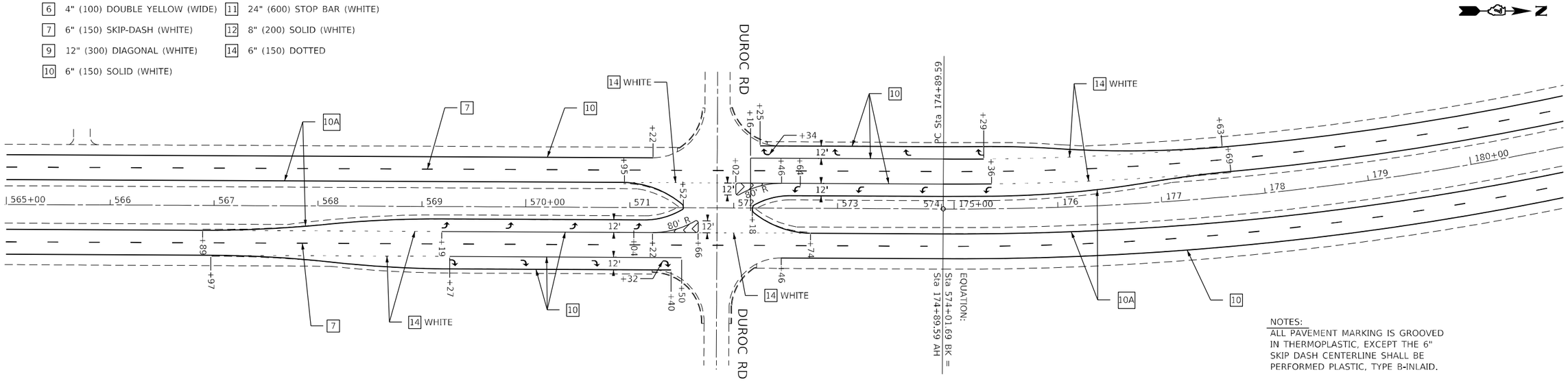

NOTES:
ALL PAVEMENT MARKING IS GROOVED IN THERMOPLASTIC, EXCEPT THE 6" SKIP DASH CENTERLINE SHALL BE PERFORMED PLASTIC, TYPE B-INLAID.

TURN LANE ISLANDS ARE COMPRISED OF 8" WHITE PERIMETER LINES AND 12" WHITE INTERIOR LINES. CORNERS ARE 2' RADII.

MODEL: Default
FILE NAME: pw:\\ildot-pw.bentley.com:PWIDOT\Documents\IDOT Offices\District 7\Projects\74800\CAD\Dan\CADsheets\0774800-sht-pmk.dgn

USER NAME = Mona,Steffen	DESIGNED -	REVISED -	STATE OF ILLINOIS DEPARTMENT OF TRANSPORTATION	US 51 PAVEMENT MARKING DETAILS	F.A.P RTE.	SECTION	COUNTY	TOTAL SHEETS / SHEET NO.
	DRAWN -	REVISED -			322	50, 51, 52 RS-3	MACON	79 / 59
PLOT SCALE = 100.0000 ' / in.	CHECKED -	REVISED -					CONTRACT NO. 74800	
PLOT DATE = 4/6/2023	DATE -	REVISED -		SCALE: SHEET 4 OF 9 SHEETS STA. TO STA.			ILLINOIS FED. AID PROJECT	

PAVEMENT MARKING LEGEND

2	4" (100) SOLID (YELLOW)	10A	6" (150) SOLID (YELLOW)
6	4" (100) DOUBLE YELLOW (WIDE)	11	24" (600) STOP BAR (WHITE)
7	6" (150) SKIP-DASH (WHITE)	12	8" (200) SOLID (WHITE)
9	12" (300) DIAGONAL (WHITE)	14	6" (150) DOTTED
10	6" (150) SOLID (WHITE)		

NOTES:
ALL PAVEMENT MARKING IS GROOVED IN THERMOPLASTIC, EXCEPT THE 6" SKIP DASH CENTERLINE SHALL BE PERFORMED PLASTIC, TYPE B-INLAID.

SEE SHEET #63 FOR DETAILS NOT SHOWN

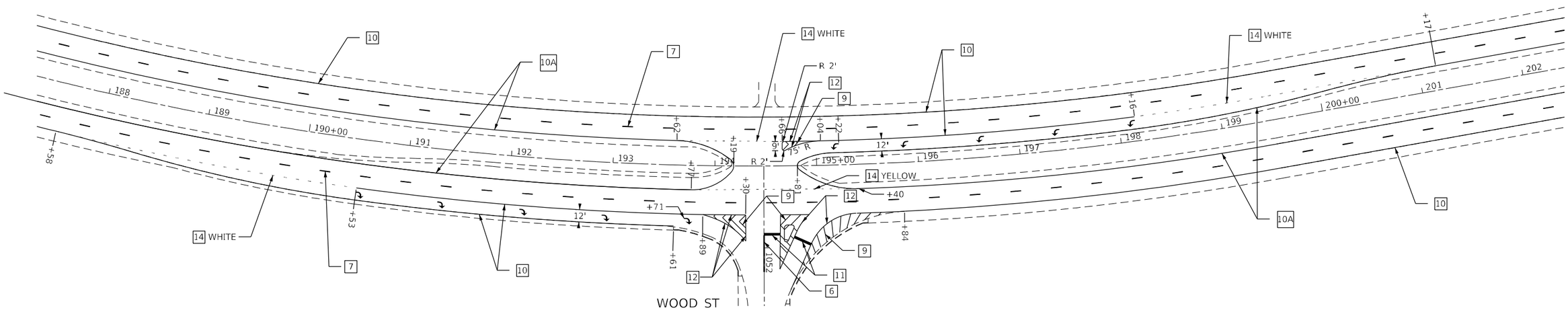

PAVEMENT MARKING LEGEND

2	4" (100) SOLID (YELLOW)	10	6" (150) SOLID (WHITE)
6	4" (100) DOUBLE YELLOW (WIDE)	10A	6" (150) SOLID (YELLOW)
7	6" (150) SKIP-DASH (WHITE)	11	24" (600) STOP BAR (WHITE)
8	4" (100) SOLID (WHITE)	12	8" (200) SOLID (WHITE)
9	12" (300) DIAGONAL (WHITE)	14	6" (150) DOTTED

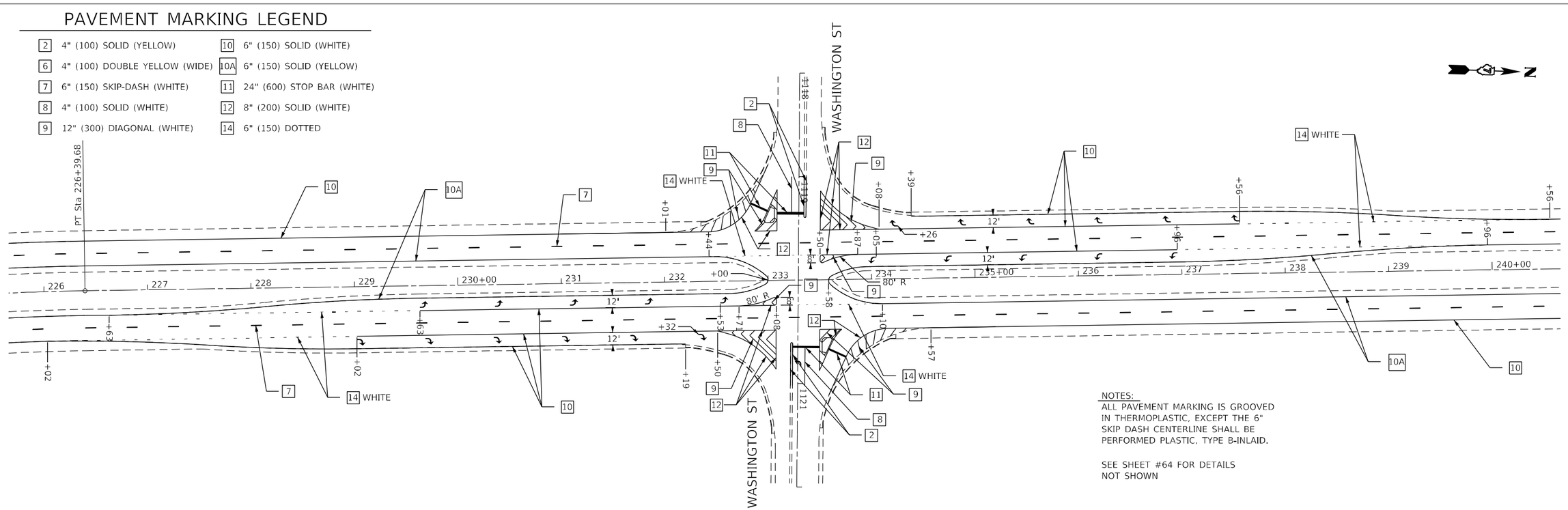

NOTES:
ALL PAVEMENT MARKING IS GROOVED IN THERMOPLASTIC, EXCEPT THE 6" SKIP DASH CENTERLINE SHALL BE PERFORMED PLASTIC, TYPE B-INLAID.

SEE SHEET #64 FOR DETAILS NOT SHOWN

MODEL: Default
FILE NAME: pw:\\ildot-pw.bentley.com:PWIDOT\Documents\IDOT Offices\District 7\Projects\74800\CADData\CADsheets\0774800-sht-pmk.dgn

USER NAME = Mona.Steffen	DESIGNED -	REVISED -	
	DRAWN -	REVISED -	
PLOT SCALE = 100.0000 ' / in.	CHECKED -	REVISED -	
PLOT DATE = 4/6/2023	DATE -	REVISED -	

STATE OF ILLINOIS
DEPARTMENT OF TRANSPORTATION

US 51 PAVEMENT MARKING DETAILS

SCALE: | SHEET 5 OF 9 SHEETS | STA. TO STA.

F.A.P RTE.	SECTION	COUNTY	TOTAL SHEETS	SHEET NO.
322	50, 51, 52 RS-3	MACON	79	60
		CONTRACT NO. 74800		
		ILLINOIS	FED. AID PROJECT	

PAVEMENT MARKING LEGEND

2	4" (100) SOLID (YELLOW)	10A	6" (150) SOLID (YELLOW)
6	4" (100) DOUBLE YELLOW (WIDE)	11	24" (600) STOP BAR (WHITE)
7	6" (150) SKIP-DASH (WHITE)	12	8" (200) SOLID (WHITE)
9	12" (300) DIAGONAL (WHITE)	14	6" (150) DOTTED
10	6" (150) SOLID (WHITE)		

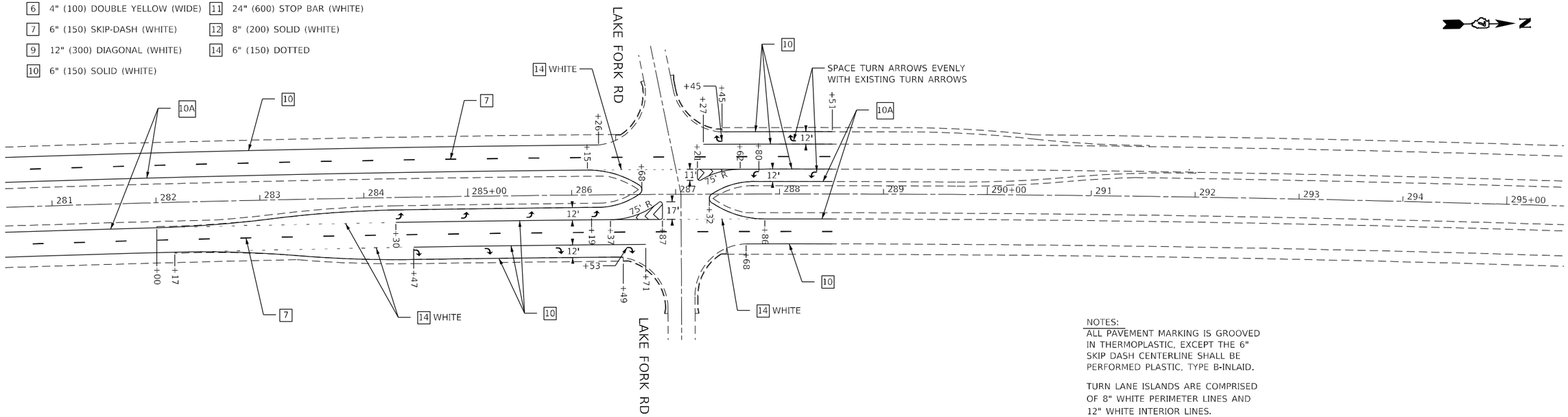

NOTES:
ALL PAVEMENT MARKING IS GROOVED IN THERMOPLASTIC, EXCEPT THE 6" SKIP DASH CENTERLINE SHALL BE PERFORMED PLASTIC, TYPE B-INLAID.

TURN LANE ISLANDS ARE COMPRISED OF 8" WHITE PERIMETER LINES AND 12" WHITE INTERIOR LINES. CORNERS ARE 2' RADII

MODEL: Default
FILE NAME: pw:\\ildot-pw.bentley.com:PWIDOT\Documents\IDOT Offices\District 7\Projects\74800\CADData\CADsheets\0774800-sht-pmk.dgn

USER NAME = Mona,Steffen	DESIGNED -	REVISED -	
	DRAWN -	REVISED -	
PLOT SCALE = 100.0000 ' / in.	CHECKED -	REVISED -	
PLOT DATE = 4/6/2023	DATE -	REVISED -	

STATE OF ILLINOIS
DEPARTMENT OF TRANSPORTATION

US 51 PAVEMENT MARKING DETAILS

SCALE: | SHEET 6 OF 9 SHEETS | STA. | TO STA.

F.A.P RTE.	SECTION	COUNTY	TOTAL SHEETS	SHEET NO.
322	50, 51, 52 RS-3	MACON	79	61
		CONTRACT NO. 74800		
		ILLINOIS	FED. AID PROJECT	

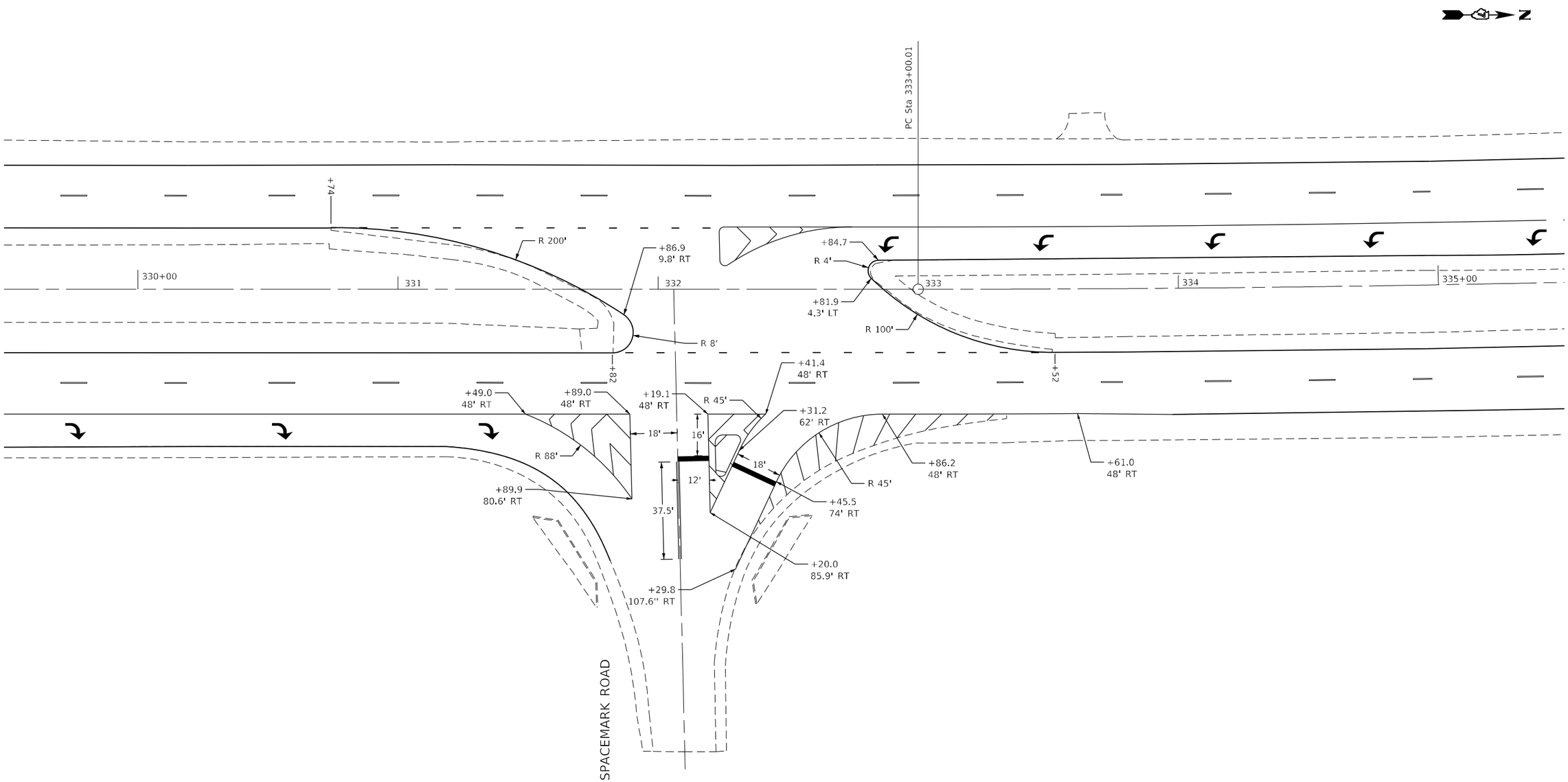

MODEL: Default
FILE NAME: pw:\\ildot-pw.bentley.com:PWIDOT\Documents\IDOT Offices\District 7\Projects\74800\CADData\CADsheets\D7774800-sht-pmk.dgn

USER NAME = Mona.Steffen	DESIGNED -	REVISED -	
	DRAWN -	REVISED -	
PLOT SCALE = 40.0000 ' / in.	CHECKED -	REVISED -	
PLOT DATE = 4/6/2023	DATE -	REVISED -	

STATE OF ILLINOIS
DEPARTMENT OF TRANSPORTATION

US 51 PAVEMENT MARKING DETAILS

SCALE: | SHEET 7 OF 9 SHEETS | STA. TO STA.

F.A.P RTE.	SECTION	COUNTY	TOTAL SHEETS	SHEET NO.
322	50,51,52 RS-3	MACON	79	62
		CONTRACT NO. 74800		
		ILLINOIS FED. AID PROJECT		

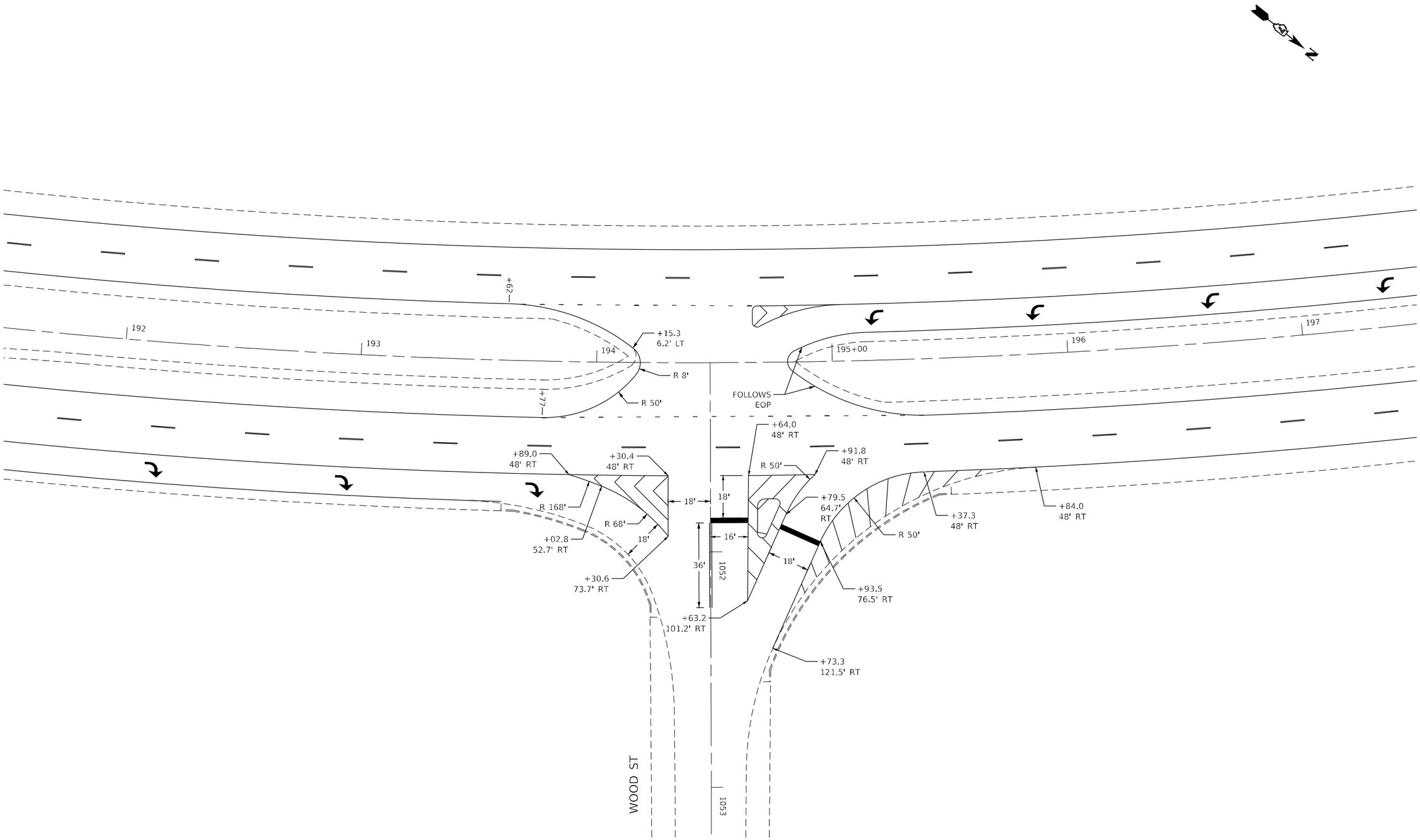

MODEL: Default
FILE NAME: pw:\\ildot-pw.bentley.com:PWIDOT\Documents\IDOT Offices\District 7\Projects\74800\CADData\CADsheets\D774800-sht-pmk.dgn

USER NAME = Mona,Steffen	DESIGNED -	REVISED -	
	DRAWN -	REVISED -	
PLOT SCALE = 40.0000 ' / in.	CHECKED -	REVISED -	
PLOT DATE = 4/6/2023	DATE -	REVISED -	

STATE OF ILLINOIS
DEPARTMENT OF TRANSPORTATION

US 51 PAVEMENT MARKING
DETAILS

SCALE: | SHEET 8 OF 9 SHEETS | STA. | TO STA.

F.A.P RTE.	SECTION	COUNTY	TOTAL SHEETS	SHEET NO.
322	50,51,52 RS-3	MACON	79	63
		CONTRACT NO. 74800		
		ILLINOIS FED. AID PROJECT		

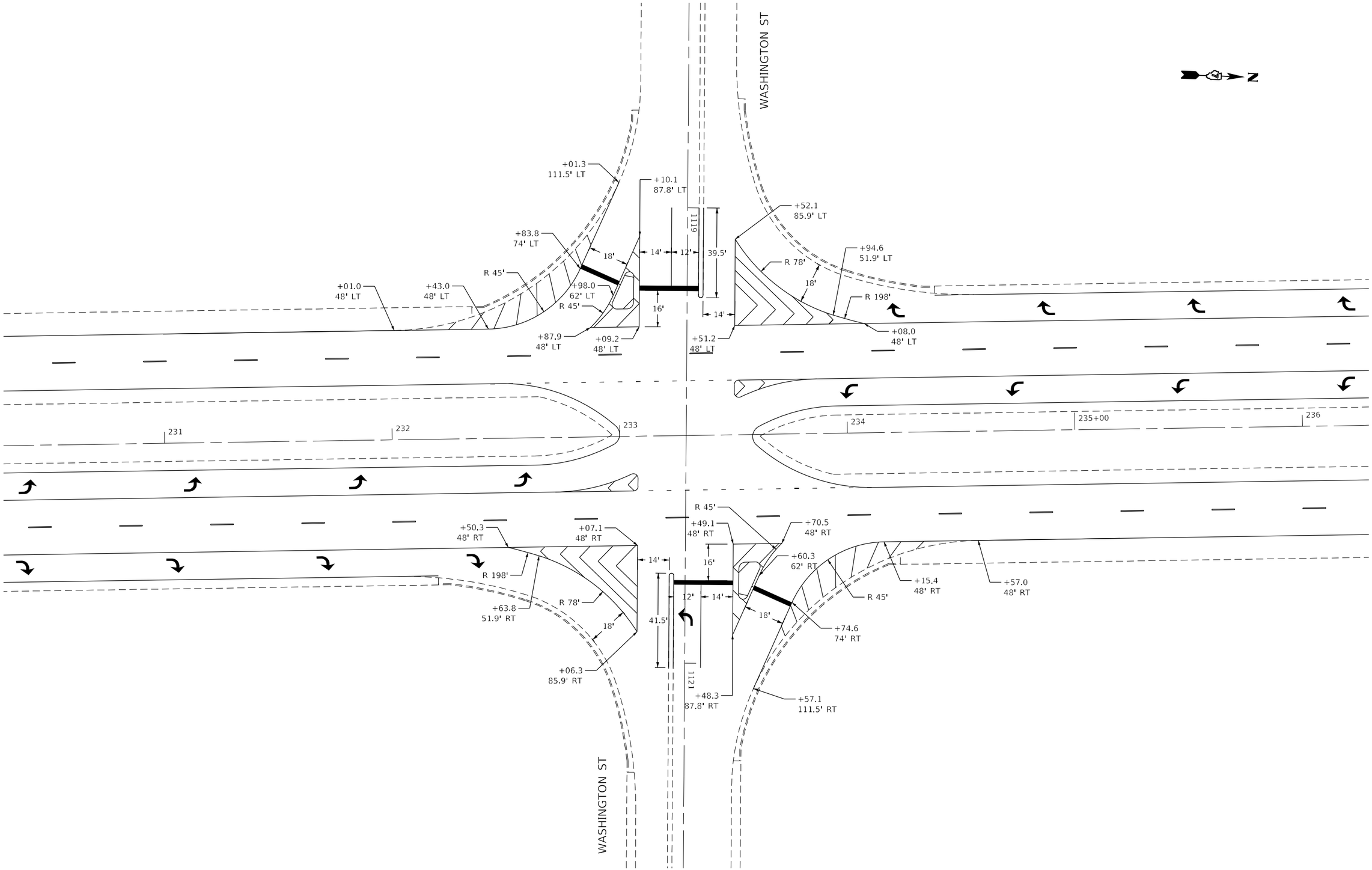

MODEL: Default
FILE NAME: pw:\\ildot-pw.bentley.com:PWIDOT\Documents\IDOT Offices\District 7\Projects\74800\CADData\CADsheets\0774800-sht-pmk.dgn

USER NAME = Mona.Steffen	DESIGNED -	REVISED -	STATE OF ILLINOIS DEPARTMENT OF TRANSPORTATION	US 51 PAVEMENT MARKING DETAILS	F.A.P RTE.	SECTION	COUNTY	TOTAL SHEETS / SHEET NO.
	DRAWN -	REVISED -			322	50,51,52 RS-3	MACON	79 / 64
PLOT SCALE = 40.0000 ' / in.	CHECKED -	REVISED -					CONTRACT NO. 74800	
PLOT DATE = 4/6/2023	DATE -	REVISED -		SCALE: SHEET 9 OF 9 SHEETS STA. TO STA.			ILLINOIS FED. AID PROJECT	

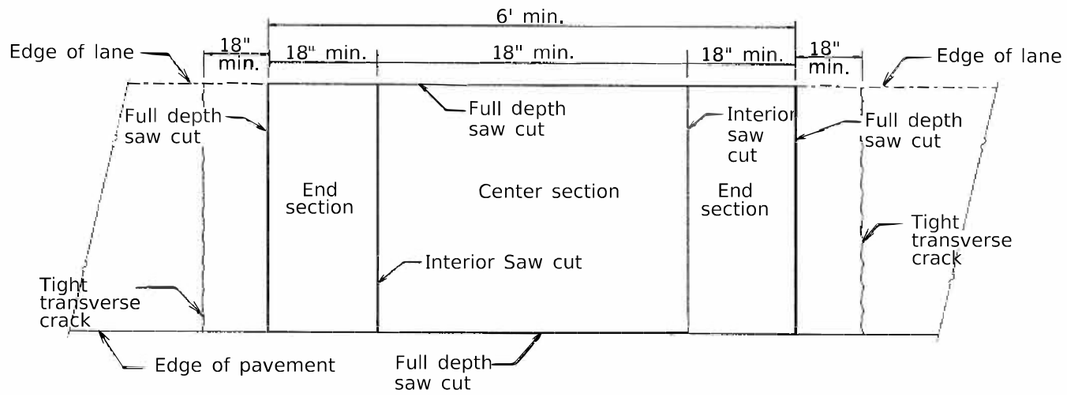

PAVEMENT SAWING DETAIL

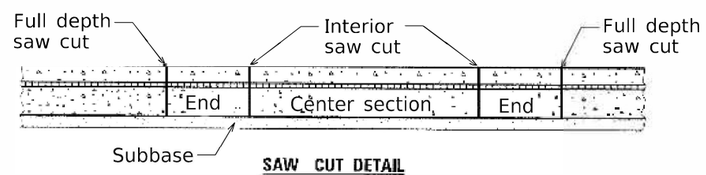

SAW CUT DETAIL

GENERAL NOTES

Interior saw cuts will be included in the cost of "CLASS A PATCHES (SPECIAL)."

When patching two adjacent lanes in one operation, the longitudinal joint shall be a longitudinal sawed joint as detailed on Standard 442001-04,however, the groove may be either preformed or sawed.

REV. - MS

MODEL: Default
FILE NAME: pw:\\ildot-pw.bentley.com:FWIDOT\Documents\IDOT Offices\District 7\Projects\74800\CAD\Data\CADsheets\D774800-sht-details.dgn

USER NAME = Mona.Steffen	DESIGNED -	REVISED -	
	DRAWN -	REVISED -	
PLOT SCALE = 100.0000 ' / in.	CHECKED -	REVISED -	
PLOT DATE = 4/6/2023	DATE -	REVISED -	

STATE OF ILLINOIS
DEPARTMENT OF TRANSPORTATION

CLASS A PATCHES (SPECIAL)

SCALE: | SHEET 1 OF 2 SHEETS | STA. | TO STA.

F.A.P. RTE.	SECTION	COUNTY	TOTAL SHEETS	SHEET NO.
322	50,51,52 RS-3	MACON	79	65
		CONTRACT NO. 74800		
		ILLINOIS	FED. AID PROJECT	

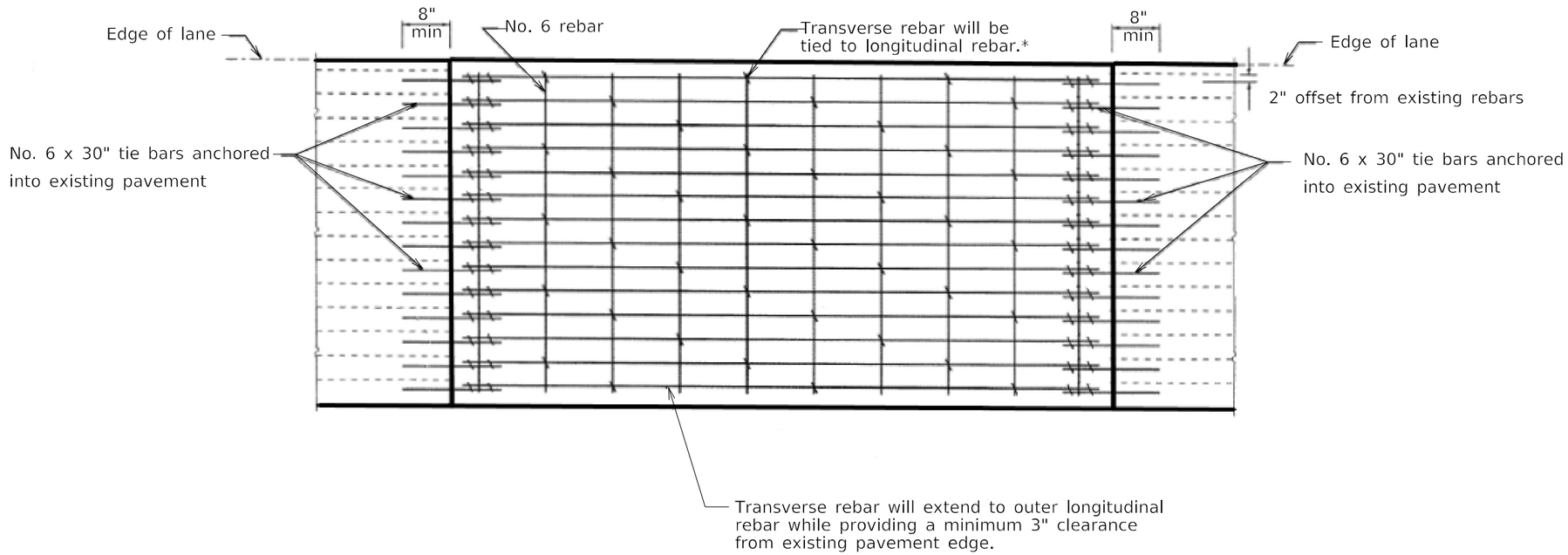

PAVEMENT REINFORCEMENT DETAIL

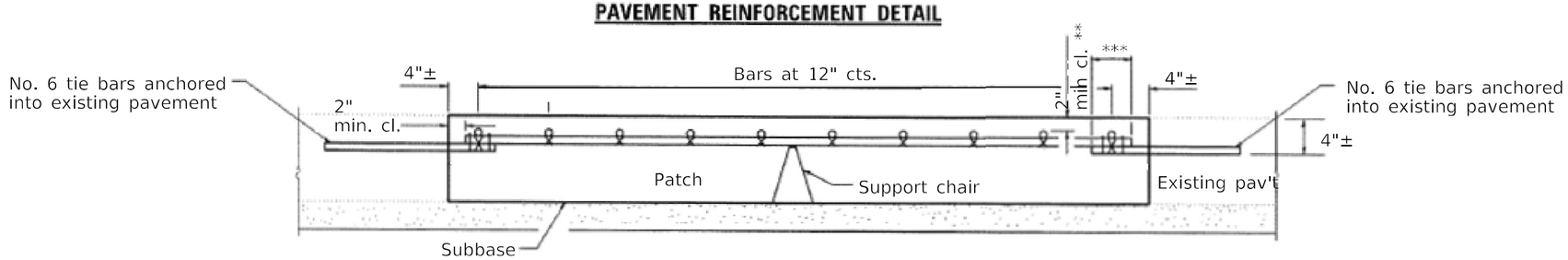

PATCHING DETAIL

* Every 3rd intersection must be tied.

** When the minimum clearance cannot be obtained with the transverse bar on top then the transverse rebar shall be tied to the bottom of the longitudinal rebar.

*** Minimum lap length is 18"

GENERAL NOTES

The #6 tie bars to be drilled & grouted into the existing pavement shall be included in the cost of "CLASS A PATCHES (SPECIAL)."

MODEL: Default
FILE NAME: pw:\\illinois-pw.bentley.com:PWIDOT\Documents\IDOT Offices\District 7\Projects\74800\CADData\CADsheets\0774800-sht-details.dgn

USER NAME = Mona.Steffen	DESIGNED -	REVISED -	STATE OF ILLINOIS DEPARTMENT OF TRANSPORTATION	CLASS A PATCHES (SPECIAL)	F.A.P. RTE.	SECTION	COUNTY	TOTAL SHEETS	SHEET NO.
	DRAWN -	REVISED -			322	50,51,52 RS-3	MACON	79	66
PLOT SCALE = 100.0000 ' / in.	CHECKED -	REVISED -					CONTRACT NO. 74800		
PLOT DATE = 4/6/2023	DATE -	REVISED -		SCALE: SHEET 2 OF 2 SHEETS STA. TO STA.		ILLINOIS	FED. AID PROJECT		

PROPOSED BUTT JOINT/PAVING DETAIL

NORTHBOUND LANES					SOUTHBOUND LANES				
STA	265+10	TO	STA	265+85	STA	265+10	TO	STA	265+85
STA	423+75.07	TO	STA	424+50.07	STA	423+14.66	TO	STA	423+89.66
STA	425+54.32	TO	STA	426+29.32	STA	424+93.91	TO	STA	425+68.91
STA	261+35.18	TO	STA	262+10.18	STA	261+08.97	TO	STA	261+83.97
STA	263+01.35	TO	STA	263+76.35	STA	262+75.14	TO	STA	263+50.14
STA	287+76	TO	STA	288+51	STA	287+76	TO	STA	288+51

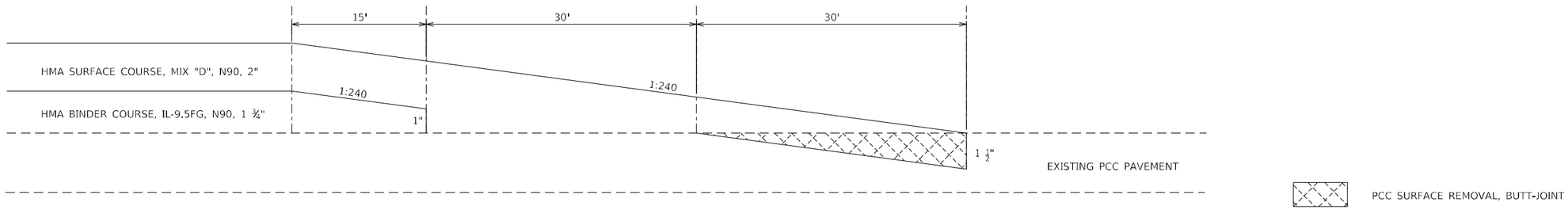

PROPOSED PAVING TRANSITION

NORTHBOUND LANES

STA	434+02	TO	STA	434+32
STA	572+24	TO	STA	572+54

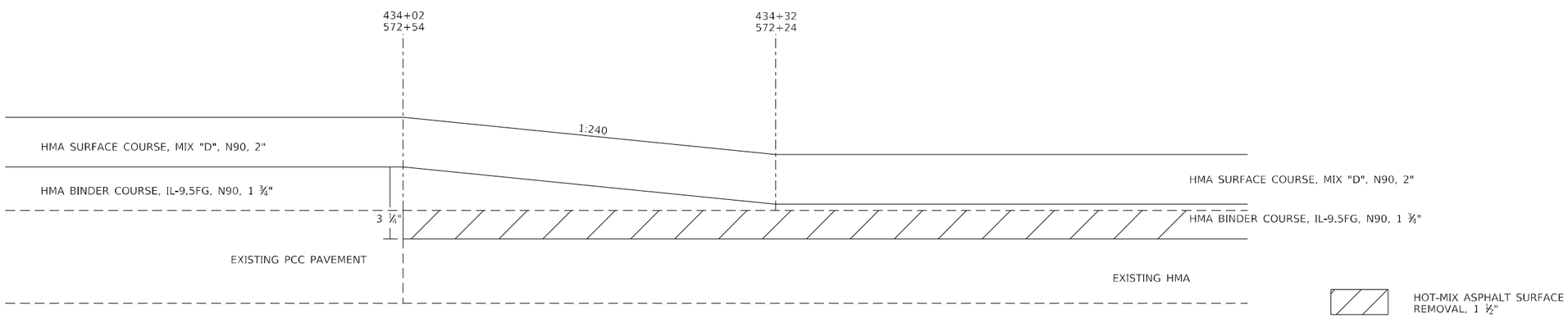

MODEL: Default
FILE NAME: pw:\\ildot-pw.bentley.com:PWIDOT\Documents\IDOT Offices\District 7\Projects\74800\CADData\CADsheets\0774800-sht-details.dgn

USER NAME = Mona.Steffen	DESIGNED -	REVISED -	
	DRAWN -	REVISED -	
PLOT SCALE = 100.0000 ' / in.	CHECKED -	REVISED -	
PLOT DATE = 4/6/2023	DATE -	REVISED -	

STATE OF ILLINOIS
DEPARTMENT OF TRANSPORTATION

PAVING DETAILS

SCALE: | SHEET 1 OF 1 SHEETS | STA. | TO STA.

F.A.P. RTE.	SECTION	COUNTY	TOTAL SHEETS	SHEET NO.
322	50,51,52 RS-3	MACON	79	67
		CONTRACT NO. 74800		

ILLINOIS | FED. AID PROJECT

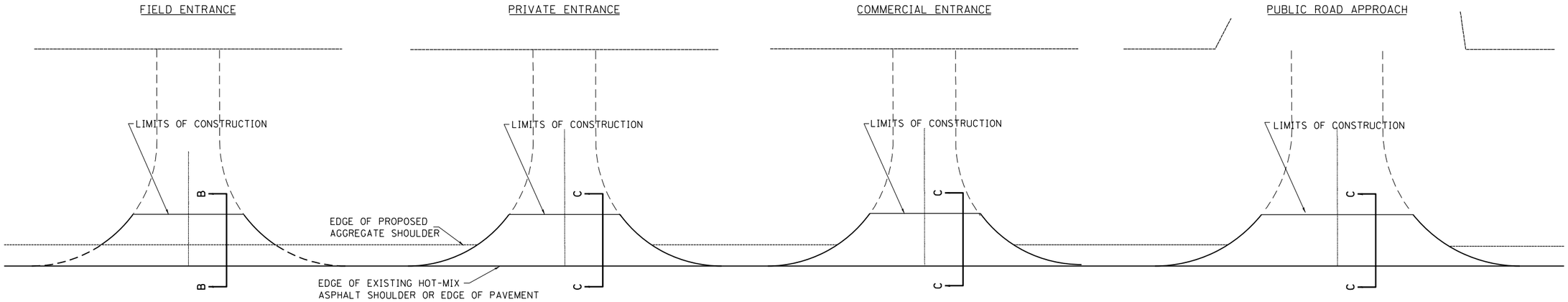

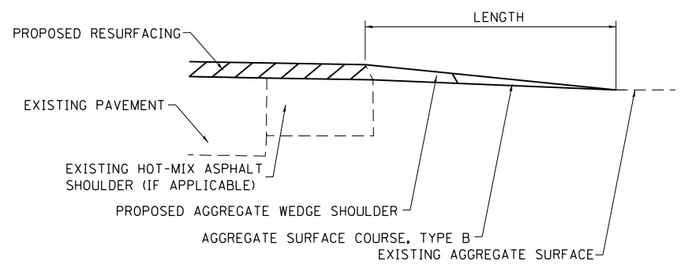

SECTION B-B

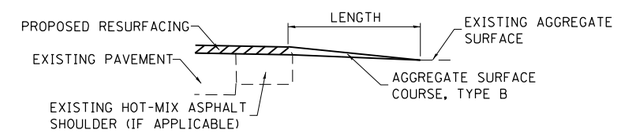

SECTION C-C

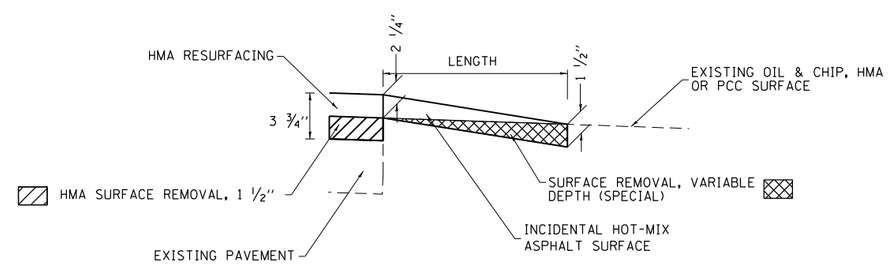

SECTION C-C

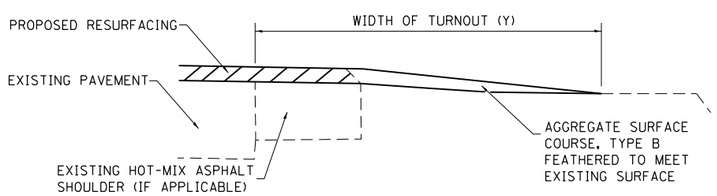

TYPICAL SECTION AT MAILBOX TURNOUT

NOTE: SEE STANDARD 406201 FOR MAILBOX TURNOUT DETAILS

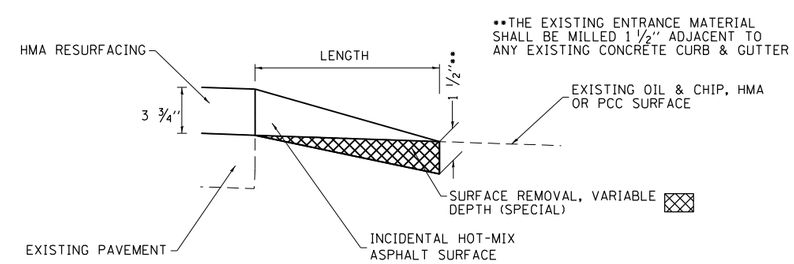

SECTION C-C

NOTES

LENGTH = 10' UNLESS OTHERWISE NOTED ON PLANS

IF THERE IS NOT EXISTING HOT-MIX ASPHALT SHOULDER THEN THE ENTRANCE TAPER STARTS AT THE EDGE OF EXISTING PAVEMENT.

THE COST OF THE BITUMINOUS MATERIALS (TACK COAT) FOR ENTRANCES AND PUBLIC ROAD APPROACHES SHALL BE INCLUDED IN THE PAY ITEM INCIDENTAL HOT-MIX ASPHALT SURFACING.

DETAIL OF CONCRETE MEDIAN, TYPE SB (DOWELLED)

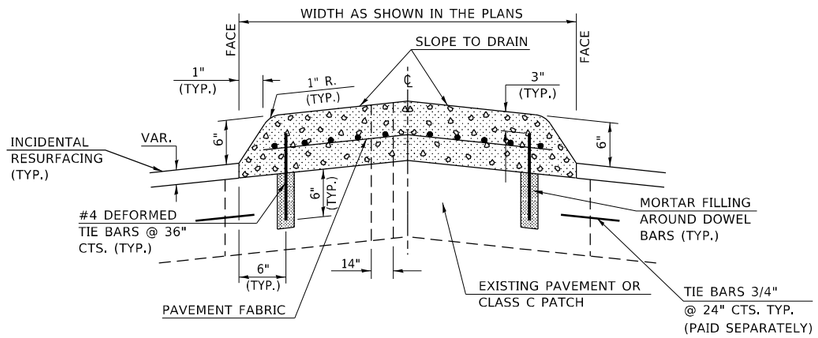

SECTION A-A

GENERAL NOTES

1. CONCRETE MEDIAN, TYPE SB (DOWELLED) SHALL BE CONSTRUCTED IN ACCORDANCE WITH THE APPLICABLE PORTIONS OF STATE STANDARD 606301 AND SECTION 606 OF THE STANDARD SPECIFICATIONS.
2. DOWEL BARS @ 36" CTS. OR AS DIRECTED BY THE ENGINEER.

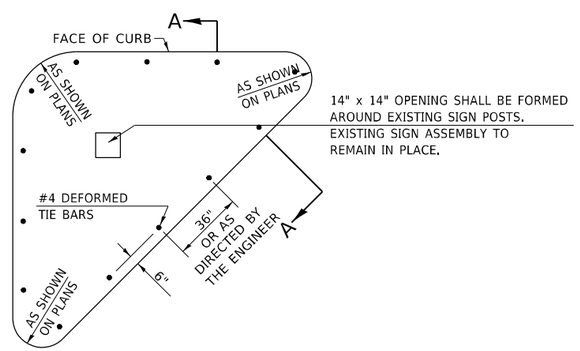

PLAN OF CORNER ISLAND

NOT TO SCALE

MODEL: Default
FILE NAME: pw:\\ildot-pw.bentley.com:PWIDOT\Documents\IDOT Offices\District 7\Projects\74800\CADData\CADsheets\0774800-sht-details.dgn

USER NAME = Mona.Steffen	DESIGNED -	REVISED -	
	DRAWN -	REVISED -	
PLOT SCALE = 100.0000 ' / in.	CHECKED -	REVISED -	
PLOT DATE = 4/6/2023	DATE -	REVISED -	

STATE OF ILLINOIS
DEPARTMENT OF TRANSPORTATION

CONCRETE MEDIAN, TYPE SB (DOWELLED)

SCALE: | SHEET 1 OF 1 SHEETS | STA. | TO STA.

F.A.P RTE.	SECTION	COUNTY	TOTAL SHEETS	SHEET NO.
322	50, 51, 52 RS-3	MACON	79	69
		CONTRACT NO. 74800		
		ILLINOIS	FED. AID PROJECT	

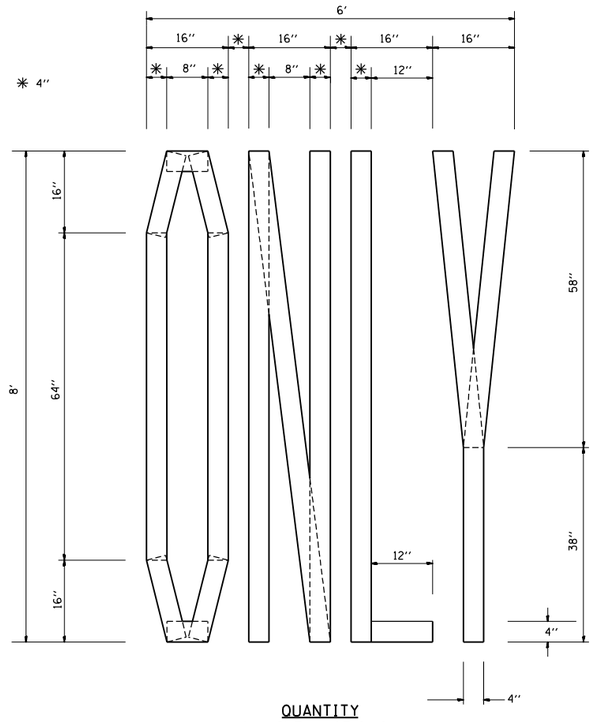

QUANTITY
4" LINE = 63.2 ft.
21.0 sq. ft.

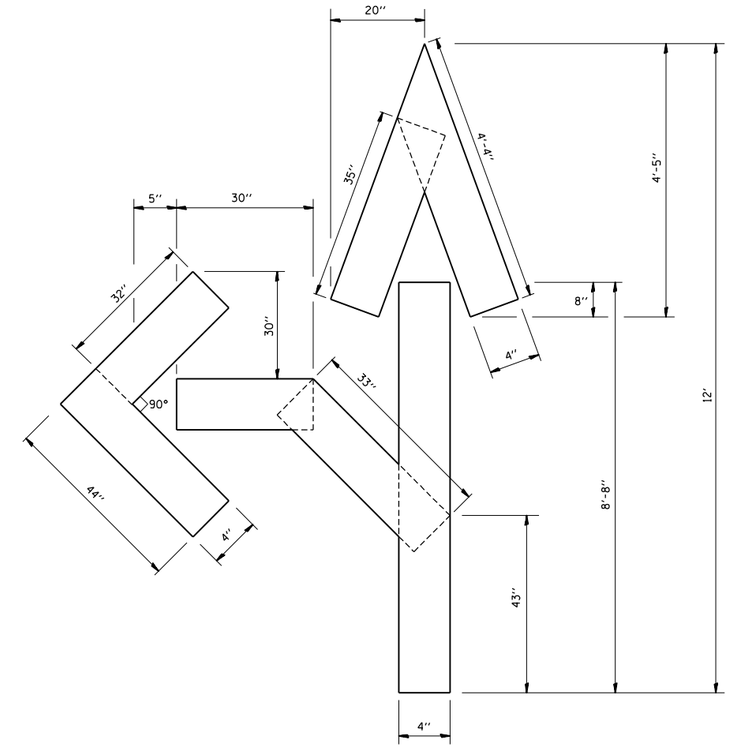

QUANTITY
4" LINE = 27.5 ft.
9.2 sq. ft.

SHORT TERM STOP BAR

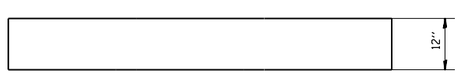

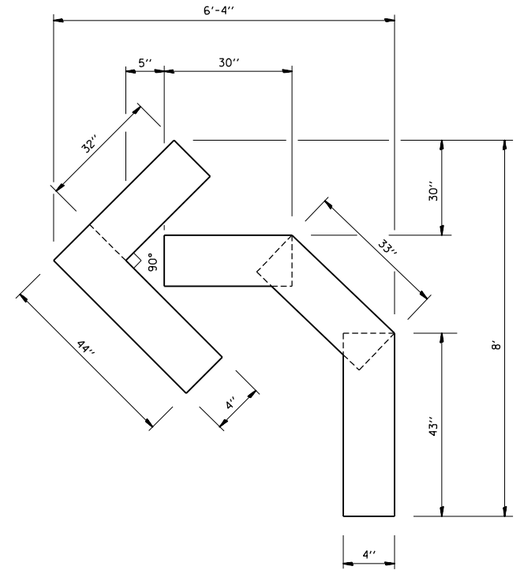

QUANTITY
4" LINE = 15.2 ft.
5.0 sq. ft.

MODEL: Default
FILE NAME: pw:\\ildot-pw.bentley.com:PWIDOT\Documents\IDOT Offices\District 7\Projects\74800\CADData\CADsheets\0774800-sht-details.dgn

USER NAME = Mona.Steffen	DESIGNED -	REVISED -	STATE OF ILLINOIS DEPARTMENT OF TRANSPORTATION
	DRAWN -	REVISED -	
PLOT SCALE = 99.9746 ' / in.	CHECKED -	REVISED -	
PLOT DATE = 4/6/2023	DATE -	REVISED -	

DETAIL FOR SHORT TERM PAVEMENT MARKING

SCALE: NA | SHEET 1 OF 1 SHEETS | STA. TO STA.

F.A.P. RTE.	SECTION	COUNTY	TOTAL SHEETS	SHEET NO.
322	50,51,52 RS-3	MACON	79	70
		CONTRACT NO. 74800		
		ILLINOIS	FED. AID PROJECT	

SLOPE DETAILS FOR PIPE UNDERDRAINS, 6" (MODIFIED)

	DIRECTION	STATION	TO	STATION	PAVEMENT PROFILE GRADE LINE (%)	PROPOSED UNDERDRAIN SLOPE (%)
	NB & SB	305+00.00		307+00.00	-0.224	-0.40
*	NB & SB	307+00.00		311+00.00	VARIES -0.224 TO +0.11	-0.40/+0.40
	NB & SB	311+00.00		315+00.00	+0.11	+0.40
*	NB & SB	315+00.00		319+00.00	VARIES +0.11 TO +0.72	+0.40/PGL
	NB & SB	319+00.00		322+00.00	+0.72	PGL
*	NB & SB	322+00.00		326+00.00	VARIES +0.72 TO -0.67	PGL/+0.40/-0.40/PGL
	NB & SB	326+00.00		336+00.00	-0.67	PGL
*	NB & SB	336+00.00		342+00.00	VARIES -0.67 TO +0.68	PGL/-0.40/+0.40/PGL
	NB & SB	342+00.00		352+00.00	+0.68	PGL
*	NB & SB	352+00.00		356+00.00	VARIES +0.68 TO -0.63	PGL/+0.40/-0.40/PGL
	NB & SB	356+00.00		358+00.00	-0.63	PGL
*	NB & SB	358+00.00		362+00.00	VARIES -0.63 TO +0.26	PGL/-0.40/+0.40
	NB & SB	362+00.00		386+00.00	+0.26	+0.40
*	NB & SB	386+00.00		390+00.00	VARIES +0.26 TO +0.473	+0.4/PGL
	NB & SB	390+00.00		395+50.00	+0.473	PGL
*	NB & SB	395+50.00		400+50.00	VARIES +0.473 TO -0.835	PGL/+0.40/-0.40/PGL
	NB & SB	400+50.00		407+00.00	-0.835	PGL
*	NB & SB	407+00.00		409+00.00	VARIES -0.835 TO -0.141	PGL/-0.40
	NB & SB	409+00.00		419+00.00	-0.141	-0.40
*	NB & SB	419+00.00		423+00.00	VARIES -0.141 TO +0.215	-0.40/+0.40
	NB & SB	423+00.00		430+00.00	+0.215	+0.40
*	NB & SB	430+00.00		434+00.00	VARIES +0.215 TO +0.911	+0.40/PGL
	NB & SB	434+00.00		446+50.00	+0.911	PGL
*	NB & SB	446+50.00		451+50.00	VARIES +0.911 TO -1.07	PGL/+0.40/-0.40/PGL
	NB & SB	451+50.00		453+00.00	-1.07	PGL
*	NB & SB	453+00.00		457+00.00	VARIES -1.07 TO -0.02	PGL/-0.40
	NB & SB	457+00.00		467+00.00	-0.02	-0.40
*	NB & SB	467+00.00		471+00.00	VARIES -0.02 TO -0.768	-0.40/PGL
	NB & SB	471+00.00		472+00.00	-0.768	PGL
*	NB & SB	472+00.00		476+00.00	VARIES -0.768 TO +0.554	PGL/-0.40/+0.40/PGL
	NB & SB	476+00.00		481+00.00	+0.554	PGL
*	NB & SB	481+00.00		485+00.00	VARIES +0.554 TO -0.0125	PGL/+0.40/-0.40
	NB & SB	485+00.00		493+00.00	-0.0125	-0.40
*	NB & SB	493+00.00		498+00.00	VARIES -0.0125 TO -0.323	-0.40
	NB & SB	498+00.00		504+50.00	-0.323	-0.40
*	NB & SB	504+50.00		508+50.00	VARIES -0.323 TO +0.095	-0.40/+0.40
	NB & SB	508+50.00		512+50.00	+0.095	+0.40
*	NB & SB	512+50.00		516+50.00	VARIES +0.095 TO +0.30	+0.40
	NB & SB	516+50.00		518+00.00	+0.30	+0.40
*	NB & SB	518+00.00		524+00.00	VARIES +0.30 TO -0.215	+0.40/-0.40
	NB & SB	524+00.00		526+00.00	-0.215	-0.40
*	NB & SB	526+00.00		530+00.00	VARIES -0.215 TO +0.72	-0.40/+0.40/PGL
	NB & SB	530+00.00		536+00.00	+0.72	PGL
*	NB & SB	536+00.00		540+00.00	VARIES +0.72 TO -0.242	PGL/+0.40/-0.40
	NB & SB	540+00.00		544+00.00	-0.242	-0.40
*	NB & SB	544+00.00		550+00.00	VARIES -0.242 TO +0.20	-0.40/+0.40
	NB & SB	550+00.00		555+00.00	+0.20	+0.40
*	NB & SB	555+00.00		559+00.00	VARIES +0.20 TO -0.15	+0.40/-0.40

	DIRECTION	STATION	TO	STATION	PAVEMENT PROFILE GRADE LINE (%)	PROPOSED UNDERDRAIN SLOPE (%)
	NB & SB	559+00.00		562+00.00	-0.15	-0.40
*	NB & SB	562+00.00		566+00.00	VARIES -0.15 TO +0.40	-0.40/+0.40/PGL
	NB & SB	566+00.00		568+00.00	+0.40	PGL
*	NB & SB	568+00.00		572+00.00	VARIES +0.40 TO +1.20	PGL
	NB & SB	572+00.00		573+00.00	+1.20	PGL
*	NB	573+00.00		574+01.69	VARIES +1.20 TO +0.22	PGL/+0.40
*	NB	STA. EQU. 574+01.69(BK)=174+89.59(AH)				
*	NB	174+89.59		178+00.00		
	NB	178+00.00		183+00.00	+0.22	+0.40
*	NB	183+00.00		189+00.00	VARIES +0.22 TO +0.236	+0.40
	NB & SB	189+00.00		195+00.00	+0.236	+0.40
*	NB & SB	195+00.00		201+00.00	VARIES +0.236 TO +0.62	+0.40/PGL
	NB & SB	201+00.00		210+00.00	+0.62	PGL
*	NB & SB	210+00.00		218+00.00	VARIES +0.62 TO +0.00	PGL/+0.40
	NB & SB	218+00.00		228+00.00	+0.00	+0.40
*	NB & SB	228+00.00		236+00.00	VARIES +0.00 TO -0.376	+0.40/-0.40
	NB & SB	236+00.00		252+00.00	-0.376	-0.40
*	NB & SB	252+00.00		258+00.00	VARIES -0.376 TO -0.48	-0.40/PGL
	NB & SB	258+00.00		262+90.71	-0.48	PGL
*	NB	262+90.71		266+90.71	VARIES -0.48 TO -0.08	PGL/-0.40
	NB	266+90.71		278+00.00	-0.08	-0.40
*	NB	278+00.00		286+00.00	VARIES -0.08 TO +0.20	-0.40/+0.40
	NB & SB	286+00.00		289+00.00	+0.20	+0.40

* VERTICAL CURVE

	DIRECTION	STATION	TO	STATION	PAVEMENT PROFILE GRADE LINE (%)	PROPOSED UNDERDRAIN SLOPE (%)
*	SB	573+00.00		574+01.69	VARIES +1.20 TO -0.04	PGL/+0.40/-0.40
*	SB	STA. EQU. 574+01.69(BK)=174+89.59(AH)				
*	SB	174+89.59		178+00.00		
	SB	178+00.00		183+00.00	-0.04	-0.40
*	SB	183+00.00		189+00.00	VARIES -0.04 TO +0.236	-0.40/+0.40
*	SB	262+90.71		266+90.71	VARIES +0.48 TO +0.15	PGL/+0.40
	SB	266+90.71		268+00.00	+0.15	+0.40
*	SB	268+00.00		272+00.00	VARIES +0.15 TO -0.178	+0.40/-0.40
	SB	272+00.00		278+00.00	-0.178	-0.40
*	SB	278+00.00		286+00.00	VARIES -0.178 TO +0.20	-0.40/+0.40

* VERTICAL CURVE

PIPE UNDERDRAIN DETAIL

(USE WHEN PGL IS LESS THAN 0.4%)

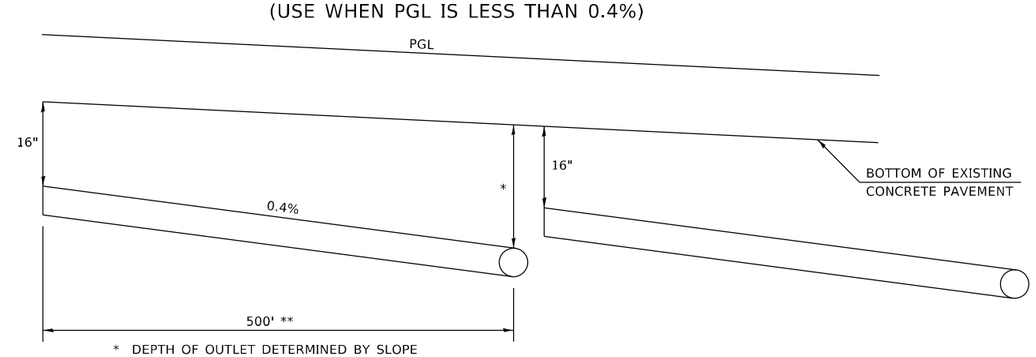

* DEPTH OF OUTLET DETERMINED BY SLOPE
** UNLESS OTHERWISE NOTED IN THE PLANS

MODEL: Default
FILE NAME: pw:\\ildot-pw.bentley.com:PWIDOT\Documents\IDOT Offices\District 7\Projects\74800\CAD\Data\CAD sheets\0774800-sht-details.dgn

USER NAME = Mona,Steffen	DESIGNED -	REVISED -	MMO 12-99
	DRAWN -	REVISED -	DRM 08-04
PLOT SCALE = 100.0000 ' / in.	CHECKED -	REVISED -	MKS 04-08
PLOT DATE = 4/6/2023	DATE -	REVISED -	DRM 01-09

STATE OF ILLINOIS
DEPARTMENT OF TRANSPORTATION

SLOPE DETAILS FOR
PIPE UNDERDRAINS, 6" (MODIFIED)

SCALE: | SHEET 1 OF 1 SHEETS | STA. TO STA.

F.A.P. RTE.	SECTION	COUNTY	TOTAL SHEETS	SHEET NO.
322	50,51,52 RS-3	MACON	79	71

CONTRACT NO. 74800

ILLINOIS | FED. AID PROJECT

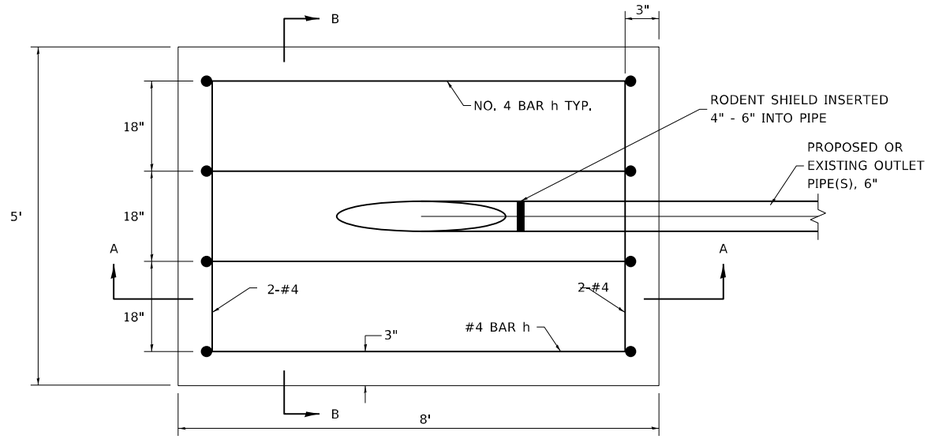

PLAN VIEW

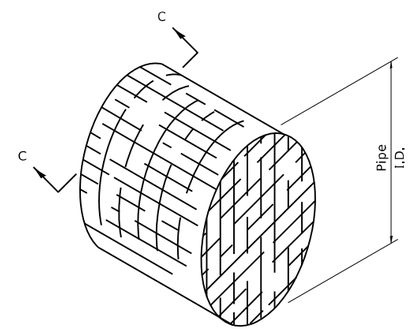

DETAIL OF RODENT SHIELD

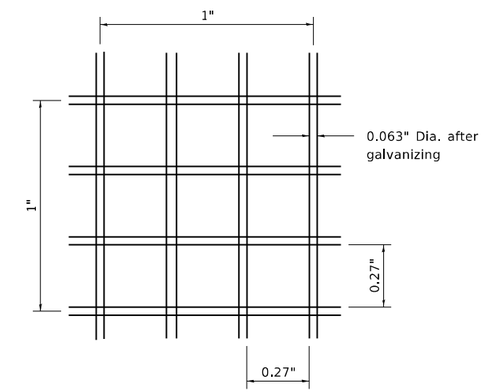

SECTION C-C

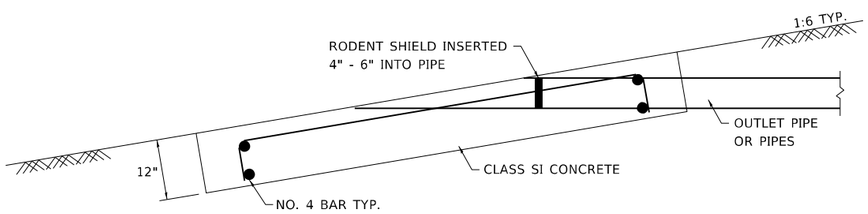

SECTION A-A

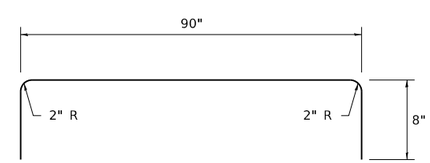

#4 h BAR

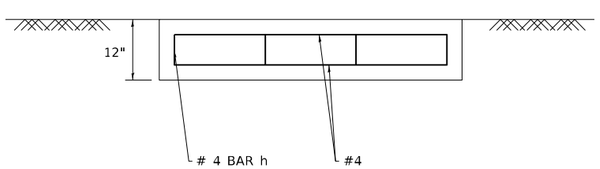

SECTION B-B

NOTES

The outlet pipe or pipes shall be located as close as possible to the center of the outlet protector.

The last 10' of outlet pipe shall be schedule 40 PVC.

The rebars may be cut or relocated to accomodate pipe.

Cut outlet pipe on a bevel to match finished surface of surrounding PCC.

Seeding Class 2 shall be considered included in the cost of the pay items.

OUTLET PROTECTOR BILL OF MATERIALS

PAY ITEM	UNIT	QUANTITY (EACH OUTLET PROTECTOR)
CLASS SI CONCRETE (MISCELLANEOUS)	CU YD	1.5
REINFORCING BARS	LB	35.6
RODENT SHIELDS	EACH	1

DISTRICT 7 DETAIL NO. 601101A

F.A.P RTE.	SECTION	COUNTY	TOTAL SHEETS	SHEET NO.
322	50,51,52 RS-3	MACON	79	72
		CONTRACT NO. 74800		
		ILLINOIS	FED. AID PROJECT	

USER NAME = Mona.Steffen	DESIGNED -	REVISED -
	DRAWN -	REVISED -
PLOT SCALE = 100.0000 ' / in.	CHECKED -	REVISED -
PLOT DATE = 4/6/2023	DATE -	REVISED -

STATE OF ILLINOIS
DEPARTMENT OF TRANSPORTATION

OUTLET PROTECTOR

SCALE: SHEET 1 OF 1 SHEETS STA. TO STA.

MODEL: Default
FILE NAME: pw:\\ildot-pw.bentley.com:PWIDOT\Documents\IDOT Offices\District 7\Projects\74800\CADData\CADsheets\074800-sht-details.dgn

TWO LANE/TWO WAY

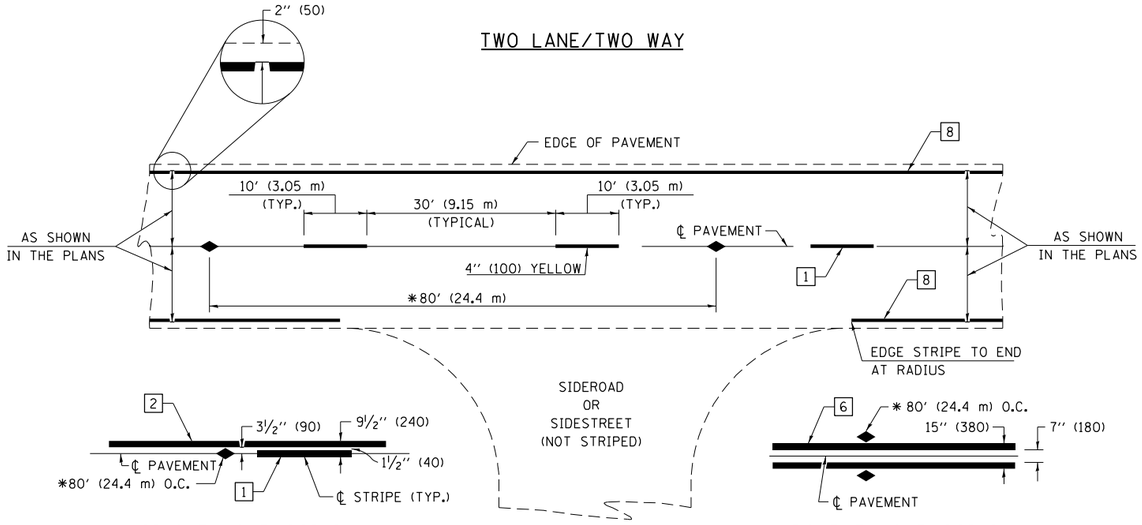

SINGLE NO PASSING

DOUBLE NO PASSING

* REDUCE TO 40' (12.2 m) O.C. ON CURVES WITH POSTED OR ADVISORY SPEEDS OF 45 mph (70 km/h) OR LESS.

PAVEMENT MARKING LEGEND

1. 4" (100) SKIP-DASH (YELLOW)
2. 4" (100) SOLID (YELLOW)
3. 12" (300) DIAGONAL (YELLOW)
4. 4" (100) DOUBLE YELLOW (NARROW)
5. 12" (300) SOLID WHITE
6. 4" (100) DOUBLE YELLOW (WIDE)
7. 6" (150) SKIP-DASH (WHITE)
8. 4" (100) SOLID (WHITE)
9. 12" (300) DIAGONAL (WHITE)
10. 6" (150) SOLID (WHITE)
11. 24" (600) STOP BAR (WHITE)
12. 8" (200) SOLID (WHITE)
13. 4" (100) PARKING WHITE

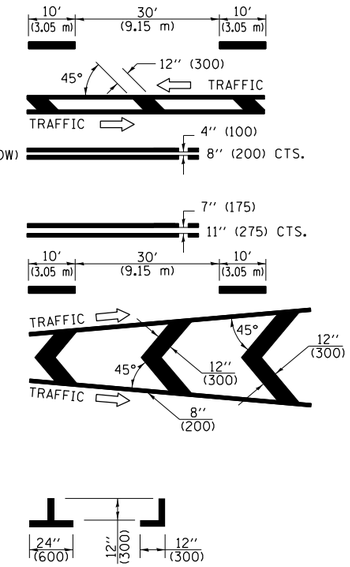

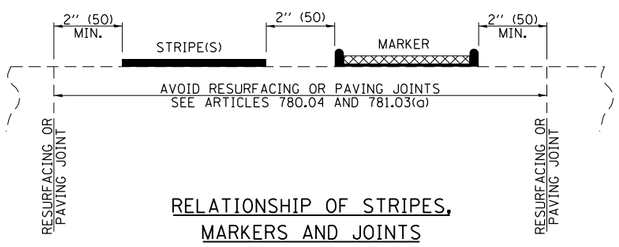

RELATIONSHIP OF STRIPES, MARKERS AND JOINTS

TYPICAL PAVEMENT MARKERS LEGEND

- ◆ TWO-WAY AMBER MARKER
- ▶ ONE-WAY AMBER MARKER
- ▷ ONE-WAY CRYSTAL MARKER

RAISED REFLECTIVE PAVEMENT MARKERS

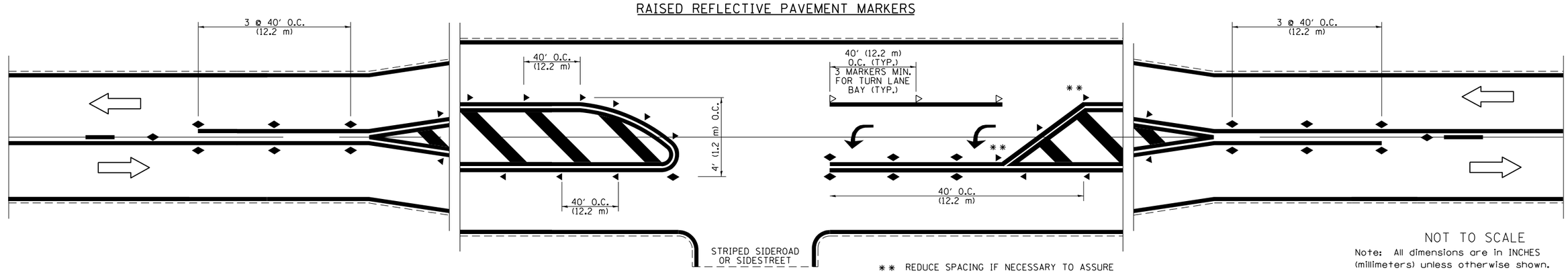

** REDUCE SPACING IF NECESSARY TO ASSURE MARKERS AT CORNER POINTS.

NOT TO SCALE

Note: All dimensions are in INCHES (millimeters) unless otherwise shown.

DISTRICT 7 DETAIL NO. 78000001

FILE NAME = pw:\\ildot-pw.bentley.com:PWIDOT\Documents\IDOT Offices\District 7\Projects\74800\CADD\Drawing sheets\D774800-sht-details.dgn	USER NAME = Mona.Steffen	DESIGNED -	REVISED - NAS 06/22	STATE OF ILLINOIS DEPARTMENT OF TRANSPORTATION
		DRAWN -	REVISED -	
	PLOT SCALE = 100.0000 ' / in.	CHECKED -	REVISED -	
	PLOT DATE = 4/6/2023	DATE -	REVISED -	

PAVEMENT MARKING AND RAISED REFLECTIVE PAVEMENT MARKERS (RURAL & URBAN APPLICATIONS)

SCALE: | SHEET NO. 1 OF 4 SHEETS | STA. | TO STA.

F.A.P RTE.	SECTION	COUNTY	TOTAL SHEETS	SHEET NO.
322	50,51,52 RS-3	MACON	79	73
		CONTRACT NO. 74800		

ILLINOIS FED. AID PROJECT

URBAN LEFT TURN

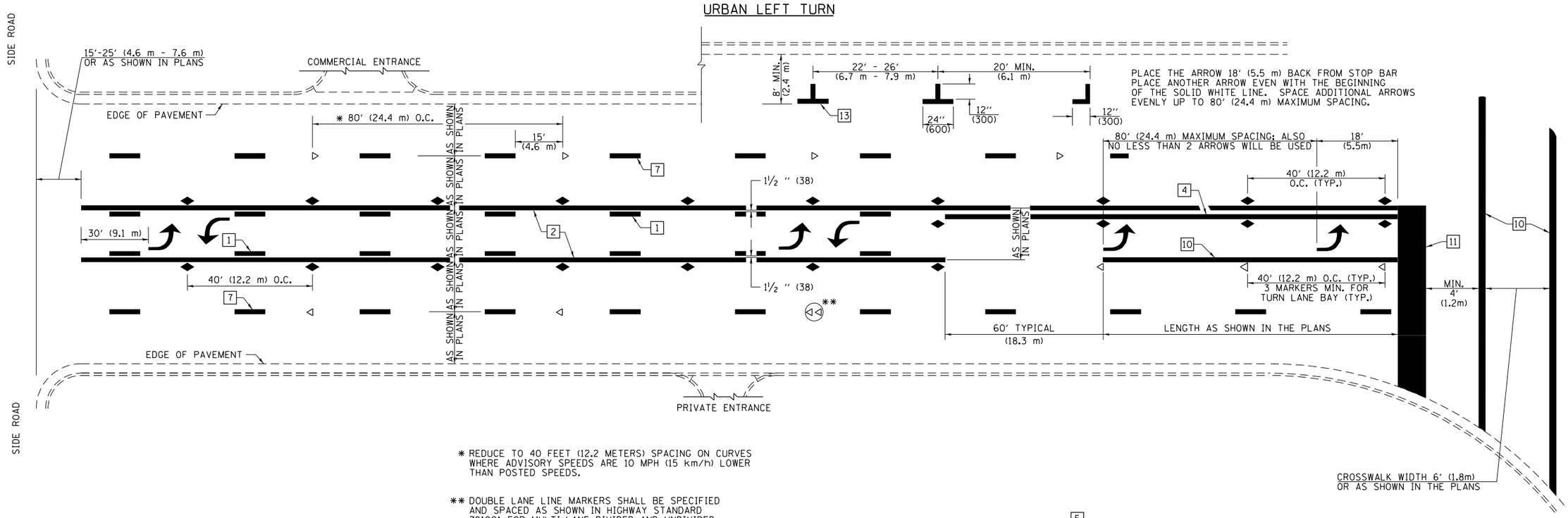

* REDUCE TO 40 FEET (12.2 METERS) SPACING ON CURVES WHERE ADVISORY SPEEDS ARE 10 MPH (15 km/h) LOWER THAN POSTED SPEEDS.

** DOUBLE LANE LINE MARKERS SHALL BE SPECIFIED AND SPACED AS SHOWN IN HIGHWAY STANDARD 781001 FOR MULTI-LANE DIVIDED AND UNDIVIDED HIGHWAYS.

PAVEMENT MARKING LEGEND

1. 4" (100) SKIP-DASH (YELLOW)
2. 4" (100) SOLID (YELLOW)
3. 12" (300) DIAGONAL (YELLOW)
4. 4" (100) DOUBLE YELLOW (NARROW)
5. 12" (300) SOLID WHITE
6. 4" (100) DOUBLE YELLOW (WIDE)
7. 6" (150) SKIP-DASH (WHITE)
8. 4" (100) SOLID (WHITE)
9. 12" (300) DIAGONAL (WHITE)
10. 6" (150) SOLID (WHITE)
11. 24" (600) STOP BAR (WHITE)
12. 8" (200) SOLID (WHITE)
13. 4" (100) PARKING WHITE

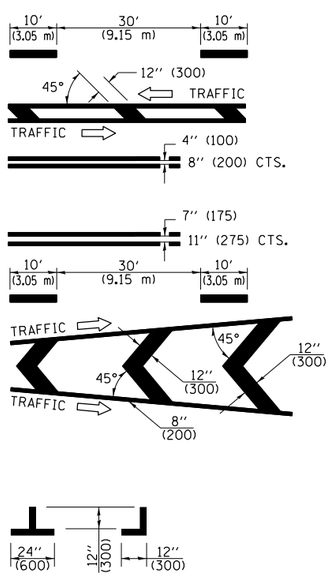

GENERAL NOTES

1. TURN ARROW PAIRS SHALL BE PLACED AT 250'(75 m) INTERVALS AND SHALL BE EVENLY SPACED BETWEEN BOTH ENDS OF THE BIDIRECTIONAL LEFT TURN LANE. USE A MINIMUM OF TWO PAIRS PER BLOCK.
2. THE SOLID YELLOW PAVEMENT MARKINGS [2] SHOULD GENERALLY START OR END NEAR THE RADIUS POINT OF EACH STREET RETURN EXCEPT WHERE ONE OR BOTH ENDS WOULD INCLUDE STOP BARS.
3. THE SKIP-DASH PAVEMENT MARKINGS [1] OR [7] SHOULD BE CENTERED BETWEEN BOTH ENDS OF EACH CITY BLOCK AND SHALL BE PLACED SO THEY LINE UP ACROSS FROM EACH OTHER.
4. USE LARGE ARROW SIZE FOR BOTH RURAL AND URBAN LOCATIONS. (SEE SECTION 780 FOR SYMBOLS TABLE)
5. LANE LINE EXTENSIONS SHALL BE THE SAME COLOR AND WIDTH AS THE LANE LINE BEING EXTENDED.
6. ALL WHITE SKIP-DASH LINES SHALL BE 6" IN WIDTH.

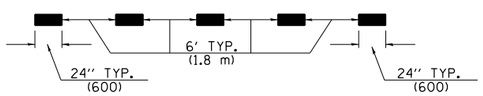

LANE LINE EXTENSIONS

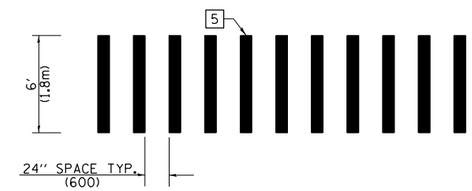

CROSSWALK DETAIL
(DECATUR CITY LIMITS ONLY)

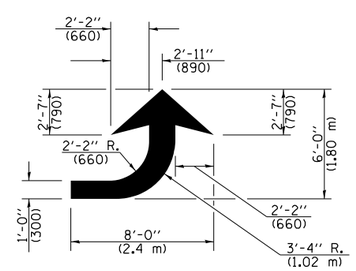

LEFT ARROW
REVERSE FOR RIGHT ARROW
AREA = 15.6 SQ. FT. (1.47 m^2)
(WHITE)

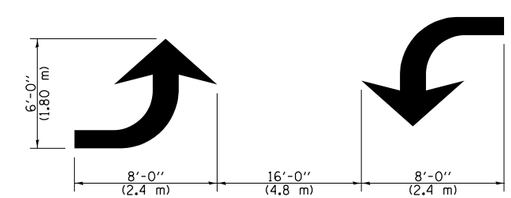

TYPICAL DOUBLE
TURN ARROWS (WHITE)

NOT TO SCALE

Note: All dimensions are in INCHES (millimeters) unless otherwise shown.

DISTRICT 7 DETAIL NO. 78000001

FILE NAME = pw:\\idot-pw.bentley.com:PWIDOT\Documents\IDOT Offices\District 7\Projects\74800\CAD\Drawing sheets\D774800-sht-details.dgn	USER NAME = Mona.Steffen	DESIGNED -	REVISED - NAS 06/22	STATE OF ILLINOIS DEPARTMENT OF TRANSPORTATION
		DRAWN -	REVISED -	
	PLOT SCALE = 100.0000 '/ in.	CHECKED -	REVISED -	
	PLOT DATE = 4/6/2023	DATE -	REVISED -	

PAVEMENT MARKING AND RAISED REFLECTIVE PAVEMENT MARKERS (RURAL & URBAN APPLICATIONS)

SCALE: | SHEET NO. 2 OF 4 SHEETS | STA. | TO STA.

F.A.P RTE.	SECTION	COUNTY	TOTAL SHEETS	SHEET NO.
322	50,51,52 RS-3	MACON	79	74
		CONTRACT NO. 74800		
		ILLINOIS FED. AID PROJECT		

ISLANDS

OPTION 1

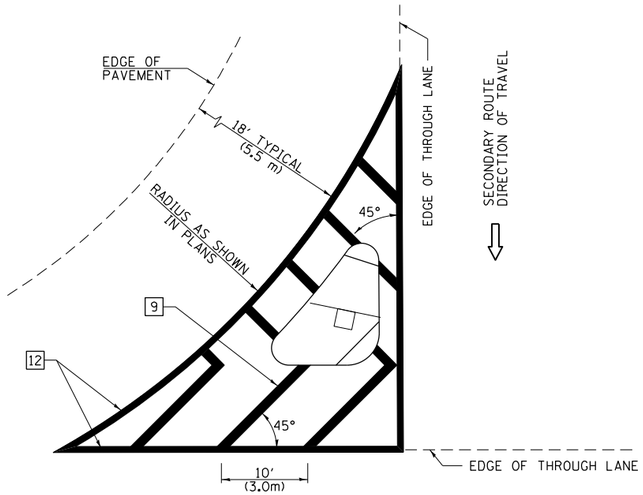

GENERAL NOTES

1. RAISED AND CORRUGATED MEDIANS SHALL BE OUTLINED WITH [2].
2. SOME OF THE INFORMATION INCLUDED WITH THIS DETAIL MAY NOT BE APPLICABLE TO THIS IMPROVEMENT.
3. PAVEMENT MARKINGS ARE TO BE EXTENDED THROUGH OMISSIONS WHEN APPLICABLE.
4. FINAL PAVEMENT MARKINGS SHALL BE IN PLACE PRIOR TO PLACING ANY RAISED REFLECTIVE PAVEMENT MARKERS.
5. THE FOLLOWING CRITERIA SHALL BE USED FOR SELECTING THE DIAGONAL PAVEMENT MARKING SPACING:

< 30 MPH	(< 50 km/h)	15' (4.5 m)
30-45 MPH	(50-75 km/h	20' (6.0 m)
>45 MPH	(>75 km/h	30' (9.0 m)

6. THE USE OF ISLAND STRIPING OPTION 1 OR OPTION 2 SHALL BE AS SHOWN ON THE PLANS.

PAVEMENT MARKING LEGEND

1	4" (100) SKIP-DASH (YELLOW)
2	4" (100) SOLID (YELLOW)
3	12" (300) DIAGONAL (YELLOW)
4	4" (100) DOUBLE YELLOW (NARROW)
5	12" (300) SOLID WHITE
6	4" (100) DOUBLE YELLOW (WIDE)
7	6" (150) SKIP-DASH (WHITE)
8	4" (100) SOLID (WHITE)
9	12" (300) DIAGONAL (WHITE)
10	6" (150) SOLID (WHITE)
11	24" (600) STOP BAR (WHITE)
12	8" (200) SOLID (WHITE)
13	4" (100) PARKING WHITE

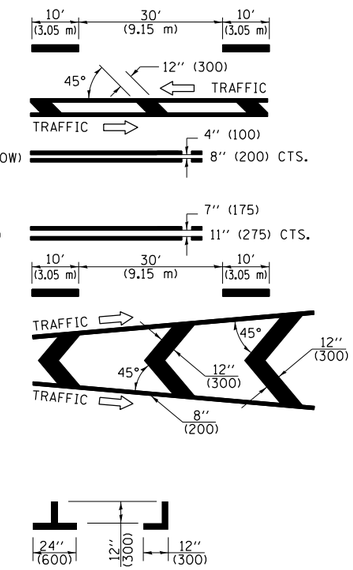

OPTION 2

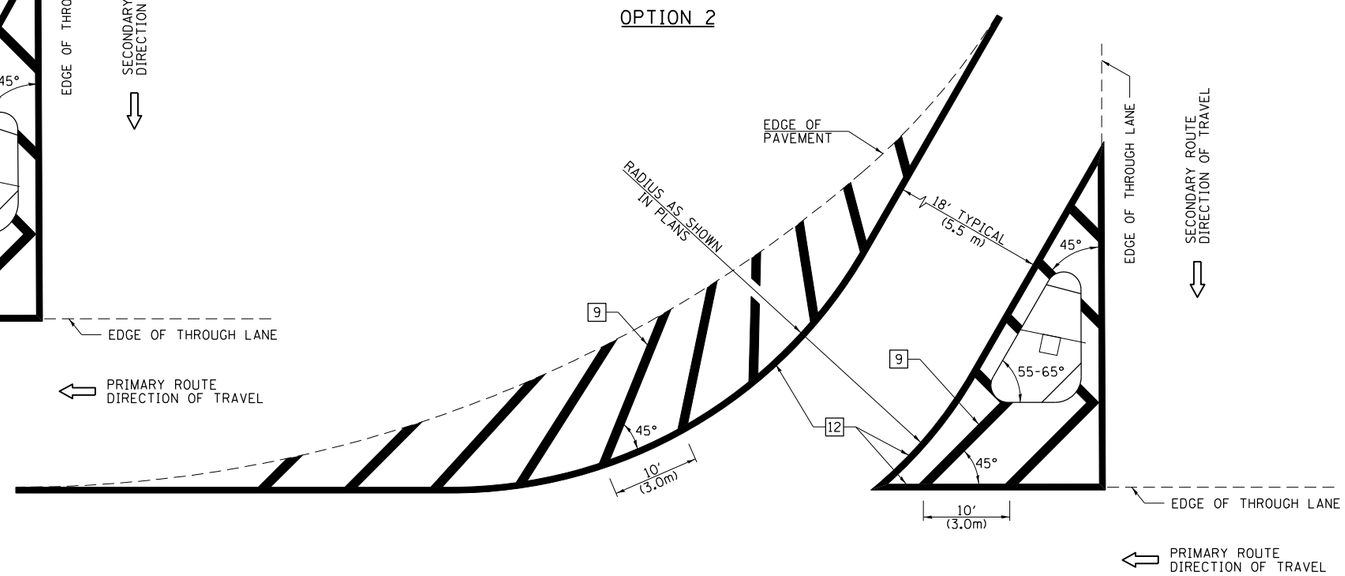

RURAL LEFT TURN STRIPING

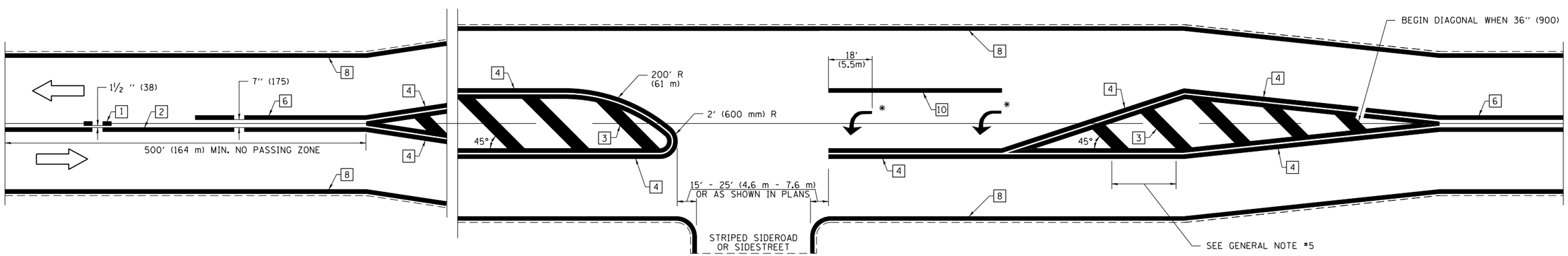

* PLACE AN ARROW 18' (5.5 m) BACK FROM END OF THE SOLID WHITE LINE. PLACE ANOTHER ARROW EVEN WITH THE BEGINNING OF THE SOLID WHITE LINE. SPACE ADDITIONAL ARROWS EVENLY UP TO 80' (24.4 m) MAXIMUM SPACING. USE MINIMUM OF 2 ARROWS.

NOT TO SCALE

Note: All dimensions are in INCHES (millimeters) unless otherwise shown.

DISTRICT 7 DETAIL NO. 78000001

FILE NAME = pw:\\ildot-pw.bentley.com:PWIDOT\Documents\IDOT Offices\District 7\Projects\74800\CADD\Drawings\Sheets\D774800-sht-details.dgn	USER NAME = Mona.Steffen	DESIGNED -	REVISED - NAS 06/22	
			REVISED -	
	PLOT SCALE = 100.0000 ' / in.	CHECKED -	REVISED -	
	PLOT DATE = 4/6/2023	DATE -	REVISED -	

STATE OF ILLINOIS
DEPARTMENT OF TRANSPORTATION

PAVEMENT MARKING AND RAISED REFLECTIVE PAVEMENT MARKERS (RURAL & URBAN APPLICATIONS)

SCALE: | SHEET NO. 3 OF 4 SHEETS | STA. TO STA.

F.A.P RTE.	SECTION	COUNTY	TOTAL SHEETS	SHEET NO.
322	50,51,52 RS-3	MACON	79	75

CONTRACT NO. 74800

ILLINOIS FED. AID PROJECT

SUPPLEMENTAL PAVEMENT MARKING TREATMENT FOR RAILROAD-HIGHWAY GRADE CROSSING

PAVEMENT MARKINGS AT RAILROAD-HIGHWAY GRADE CROSSING

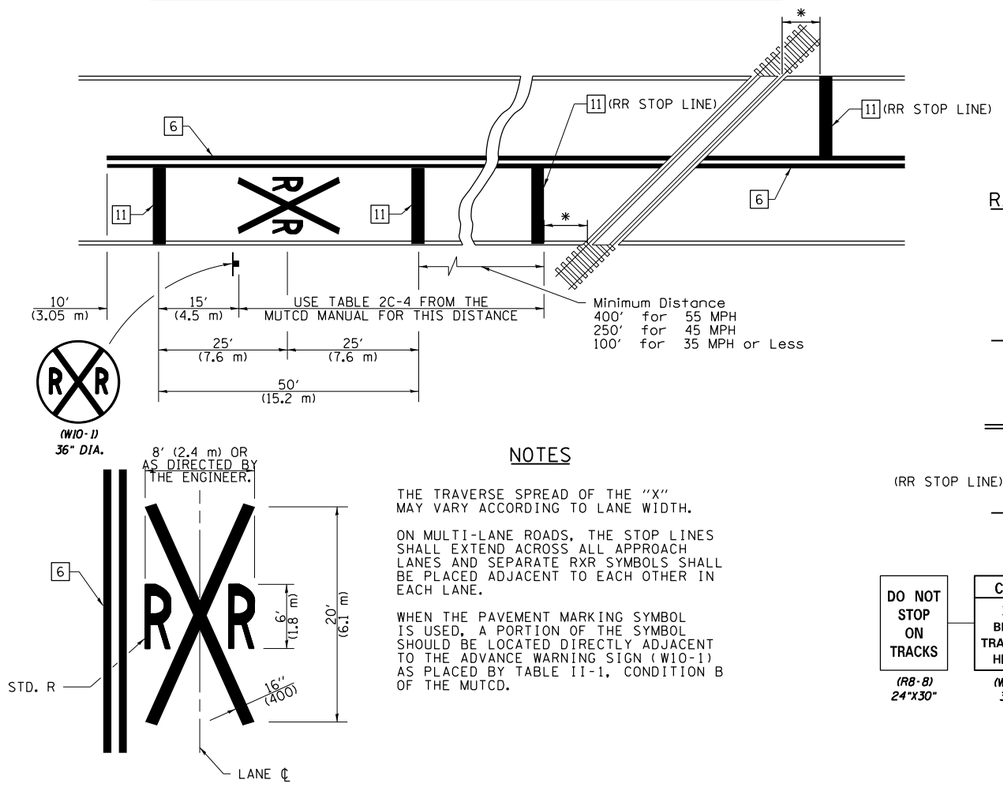

NOTES

THE TRAVERSE SPREAD OF THE "X" MAY VARY ACCORDING TO LANE WIDTH.

ON MULTI-LANE ROADS, THE STOP LINES SHALL EXTEND ACROSS ALL APPROACH LANES AND SEPARATE RXR SYMBOLS SHALL BE PLACED ADJACENT TO EACH OTHER IN EACH LANE.

WHEN THE PAVEMENT MARKING SYMBOL IS USED, A PORTION OF THE SYMBOL SHOULD BE LOCATED DIRECTLY ADJACENT TO THE ADVANCE WARNING SIGN (W10-1) AS PLACED BY TABLE II-1, CONDITION B OF THE MUTCD.

RAILROAD CROSSING WITH NON-SIGNALIZED INTERSECTION

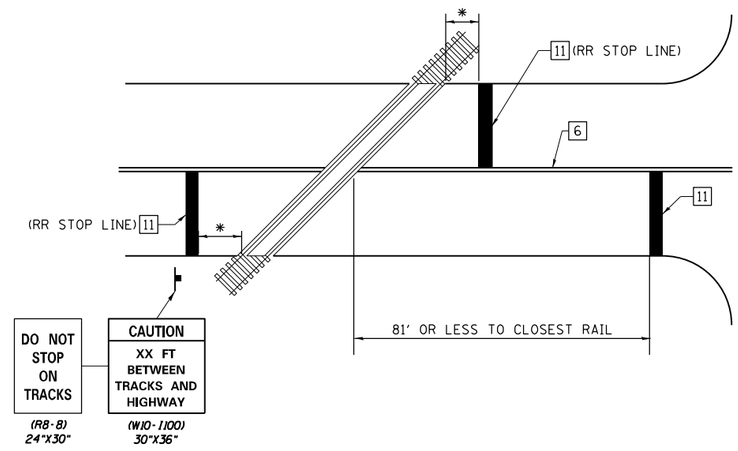

PAVEMENT MARKING LEGEND

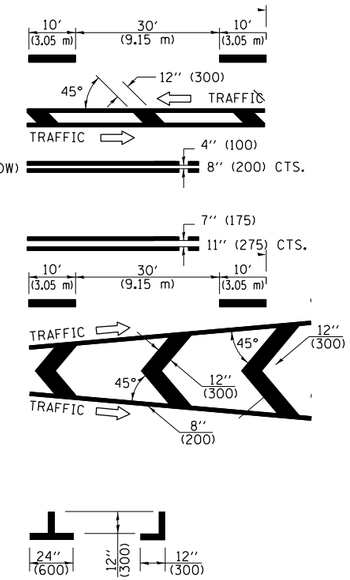

GENERAL NOTES

1. SUPPLEMENTAL PAVEMENT MARKINGS TO BE INSTALLED ONLY ON APPROACHES TO INTERSECTIONS CONTROLLED BY TRAFFIC SIGNALS WHICH ARE INTERCONNECTED WITH THE RAILROAD WARNING SIGNALS.
2. EXTEND PAVEMENT MARKINGS TO THE INTERSECTION ONLY WHERE PRE-SIGNALS ARE USED.
3. WHEN PEDESTRIAN SIGNALS ARE PRESENT WITH INTERCONNECTED SIGNALS, WARNING SIGN W10-1101 (18"X24") SHALL BE PLACED NEAR EACH PEDESTRIAN SIGNAL HEAD. COUNTDOWN PEDESTRIAN SIGNAL HEADS SHALL NOT BE UTILIZED ALONG WITH INTERCONNECTED SIGNALS.

CAUTION
WALK TIME SHORTENED WHEN TRAIN APPROACHES
(W10-1101) 18"X24"

4. PLEASE REFER TO THE IDOT BUREAU OF OPERATION MEMO OPS T-06 DATED DECEMBER 1, 2020 FOR ADDITIONAL INFORMATION

* 15′ FROM NEAR RAIL OR 8′ FROM AND PARALLEL TO GATE IF PRESENT

** WARNING SIGN W10-1100 SHALL BE USED AS AN INTERIM MEASURE AT INTERCONNECTED SIGNAL LOCATIONS WHERE PRE-SIGNALS ARE TO BE INSTALLED IN THE FUTURE. THIS SIGN SHALL BE REMOVED WHEN THE PRE-SIGNALS ARE INSTALLED AND THE PAVEMENT MARKINGS ARE EXTENDED TO THE INTERSECTION.

RAILROAD CROSSING WITH INTERCONNECT ONLY

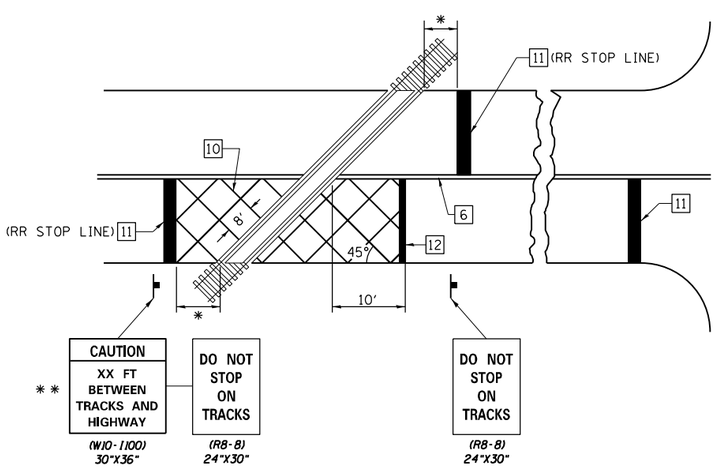

RAILROAD CROSSING WITH INTERCONNECT AND PRE-SIGNALS

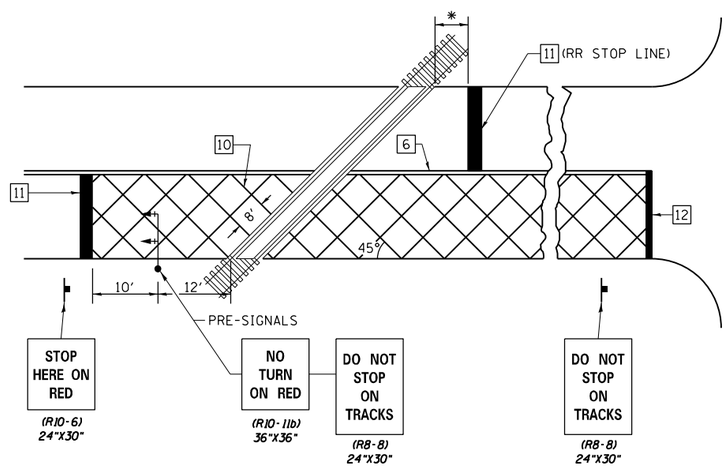

NOT TO SCALE

Note: All dimensions are in INCHES (millimeters) unless otherwise shown.

DISTRICT 7 DETAIL NO. 78000001

FILE NAME = pw:\\idot-pw.bentley.com:PWIDOT\Documents\IDOT Offices\District 7\Projects\74800\CADD\Drawings\sheets\D774800-sht-details.dgn	USER NAME = Mona.Steffen	DESIGNED -	REVISED - NAS 06/22	STATE OF ILLINOIS DEPARTMENT OF TRANSPORTATION
			REVISED -	
	PLOT SCALE = 100.0000 ′ / in.	CHECKED -	REVISED -	
	PLOT DATE = 4/6/2023	DATE -	REVISED -	

PAVEMENT MARKING AND RAISED REFLECTIVE PAVEMENT MARKERS (RURAL & URBAN APPLICATIONS)

SCALE: | SHEET NO. 4 OF 4 SHEETS | STA. TO STA.

F.A.P RTE.	SECTION	COUNTY	TOTAL SHEETS	SHEET NO.
322	50,51,52 RS-3	MACON	79	76
		CONTRACT NO. 74800		
		ILLINOIS FED. AID PROJECT		

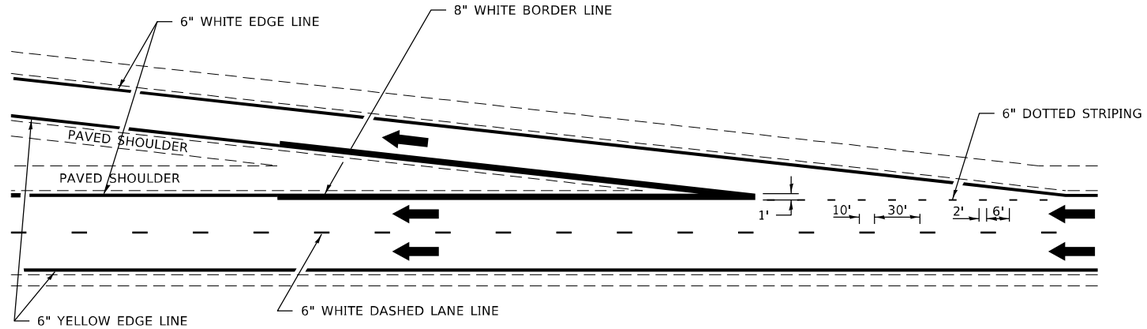

TYPICAL EXIT RAMP MARKING

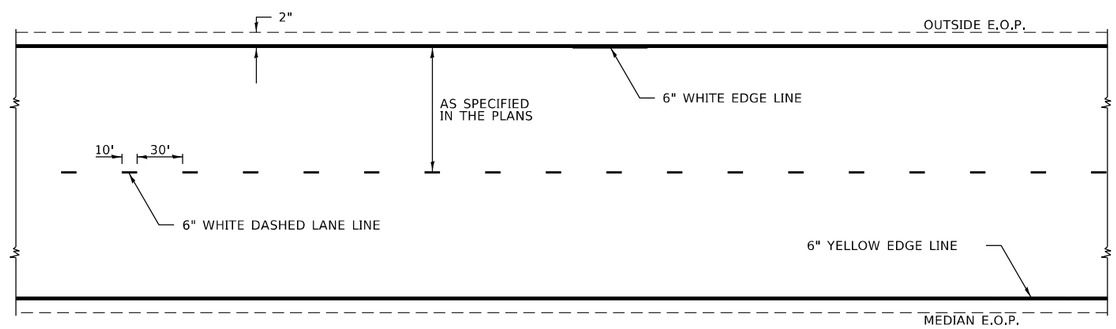

TYPICAL CENTERLING & EDGELINE MARKINGS

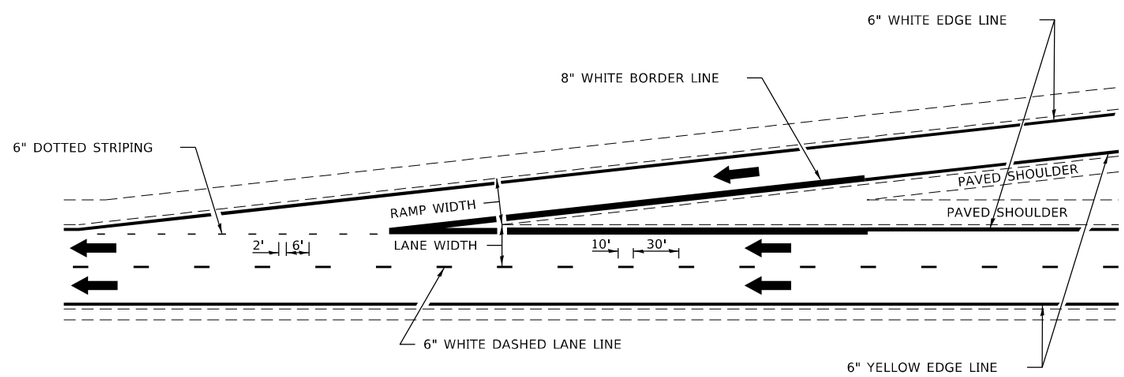

TYPICAL ENTRANCE RAMP MARKING

NOT TO SCALE

DISTRICT 7 DETAIL NO. 78000002

USER NAME = Mona.Steffen	DESIGNED -	REVISED -	MKS 04-08
	DRAWN -	REVISED -	DRM 01-09
PLOT SCALE = 100.0000 ' / in.	CHECKED -	REVISED -	DRM 12-10
PLOT DATE = 4/6/2023	DATE -	REVISED -	MAD 01-20

STATE OF ILLINOIS
DEPARTMENT OF TRANSPORTATION

TYPICAL APPLICATIONS OF FREEWAY/EXPRESSWAY PAVEMENT MARKING

SCALE: | SHEET 1 OF 2 SHEETS | STA. TO STA.

F.A.P. RTE.	SECTION	COUNTY	TOTAL SHEETS	SHEET NO.
322	50,51,52 RS-3	MACON	79	77

CONTRACT NO. 74800

ILLINOIS | FED. AID PROJECT

MODEL: Default
FILE NAME: pw:\\ildot-pw.bentley.com:PWIDOT\Documents\IDOT Offices\District 7\Projects\74800\CADData\CADsheets\D774800-sht-detail.dgn

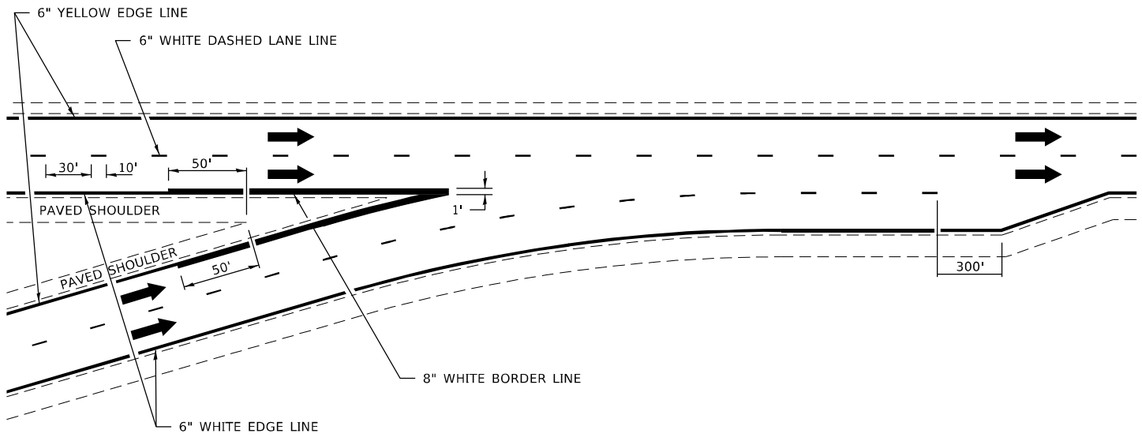

TYPICAL CONVERGENCE MARKING

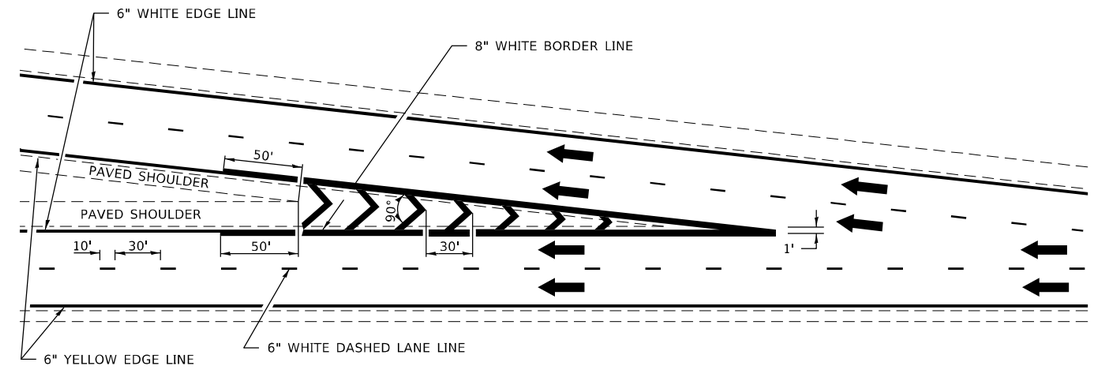

TYPICAL DIVERGENCE MARKING

AERIAL SPEED CHECK ZONES

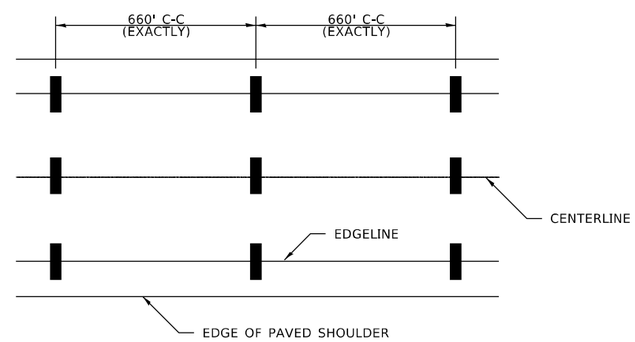

IT WILL BE NECESSARY TO HAVE A REPRESENTATIVE OF THE STATE POLICE PRESENT SO THAT THE ACCURACY OF MEASUREMENT CAN BE ATTESTED TO IN COURT.

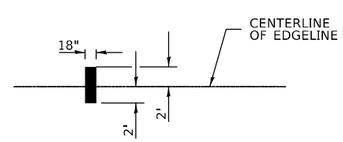

NOT TO SCALE

DISTRICT 7 DETAIL NO. 78000002

USER NAME = Mona.Steffen	DESIGNED -	REVISED -	MKS 04-08
	DRAWN -	REVISED -	DRM 01-09
PLOT SCALE = 100.0000 ' / in.	CHECKED -	REVISED -	DRM 12-10
PLOT DATE = 4/6/2023	DATE -	REVISED -	MAD 01-20

STATE OF ILLINOIS
DEPARTMENT OF TRANSPORTATION

TYPICAL APPLICATIONS OF FREEWAY/EXPRESSWAY PAVEMENT MARKING

SCALE: | SHEET 2 OF 2 SHEETS | STA. | TO STA.

F.A.P. RTE.	SECTION	COUNTY	TOTAL SHEETS	SHEET NO.
322	50,51,52 RS-3	MACON	79	78
		CONTRACT NO. 74800		
		ILLINOIS	FED. AID PROJECT	

MODEL: Default
FILE NAME: pw:\\ildot-pw.bentley.com:PWIDOT\Documents\IDOT Offices\District 7\Projects\74800\CADData\CADsheets\0774800-sht-details.dgn

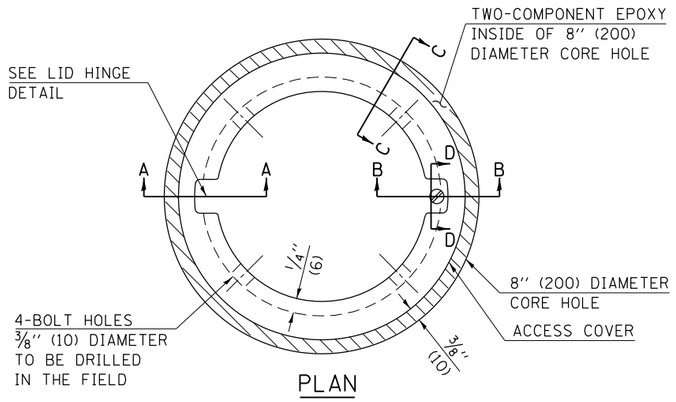

PLAN

LEGEND

- ALUMINUM CASTING
- 5" (125) OR 6" (150) P.V.C. PIPE
- TWO-COMPONENT EPOXY

T = THICKNESS OF PAVEMENT STRUCTURE

H = THE THICKNESS OF THE SUB-BASE GRANULAR + 1" (25)

BILL OF MATERIAL
ALUMINUM CASTING OF THE DIMENSIONS AND SPECIFICATIONS SHOWN OR OTHER SUBJECT TO ENGINEER'S APPROVAL OF SHOP DRAWINGS, 4 EACH - 5/16" X 2" (M8 X 50) BOLTS WITH NUTS, EPOXY, 5" OR 6" (125 mm OR 150 mm) DIAMETER P.V.C. PIPE, SCHEDULE 40 (WHEN REQUIRED).

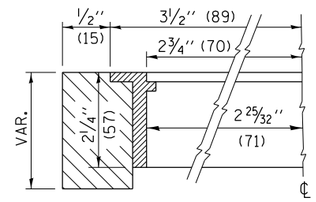

SECTION C-C

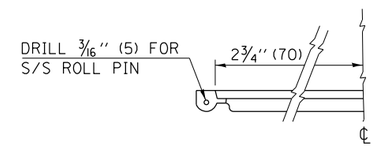

LID HINGE DETAIL

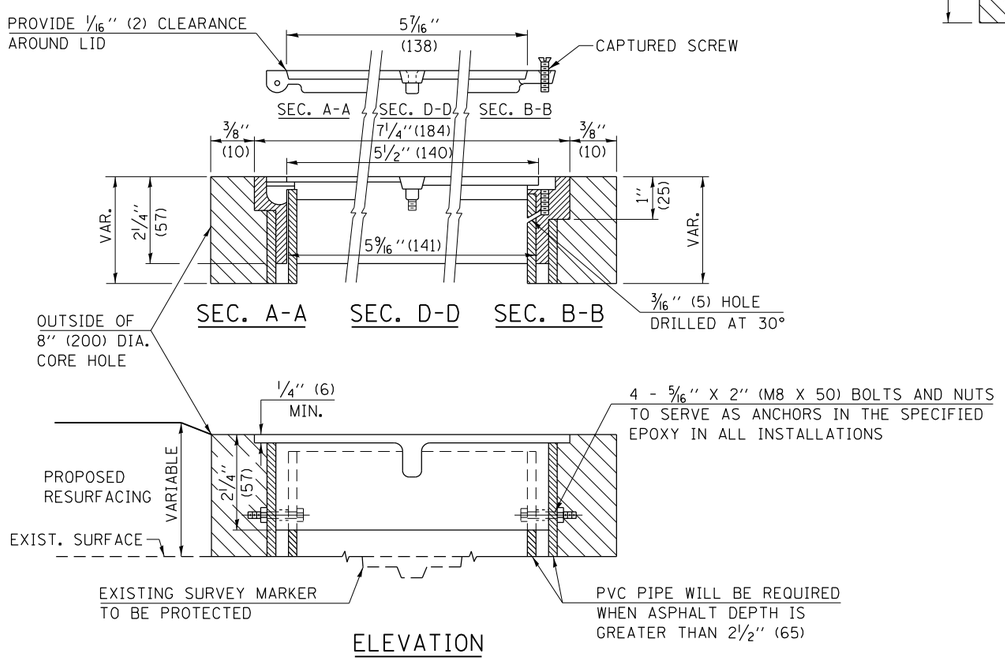

ELEVATION

EXISTING SURVEY MARKER

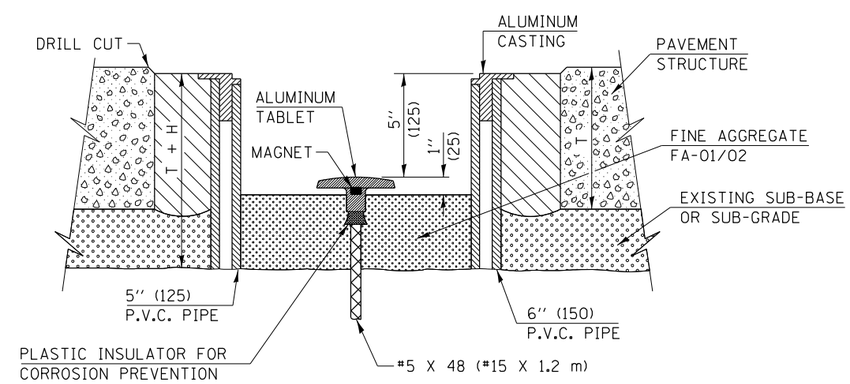

ELEVATION

PROPOSED SURVEY MARKER

NOT TO SCALE

Note: All dimensions are in INCHES (millimeters) unless otherwise shown.

DISTRICT 7 DETAIL NO. Z0070202

FILE NAME = pw:\\idot-pw.bentley.com:PWIDOT\Documents\IDOT Offices\District 7\Projects\74800\CADD\Contract sheets\D774800-sht-details.dgn	USER NAME = Mona.Steffen	DESIGNED -	REVISED - MAD 6-11	STATE OF ILLINOIS DEPARTMENT OF TRANSPORTATION
			REVISED -	
	PLOT SCALE = 100.0000 ' / in.	CHECKED -	REVISED -	
	PLOT DATE = 4/6/2023	DATE -	REVISED -	

SURVEY MARKER VAULT

SCALE: | SHEET NO. 1 OF 1 SHEETS | STA. | TO STA.

F.A.P RTE.	SECTION	COUNTY	TOTAL SHEETS	SHEET NO.
322	50,51,52 RS-3	MACON	79	79
		CONTRACT NO. 74800		
		ILLINOIS FED. AID PROJECT		