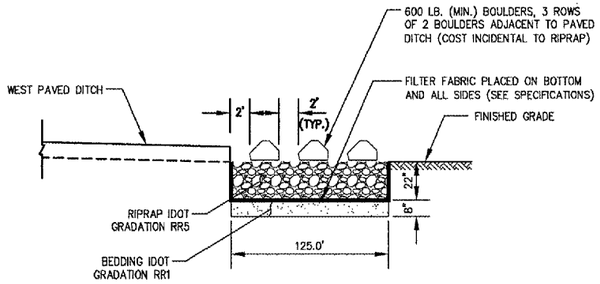

SECTION A–A

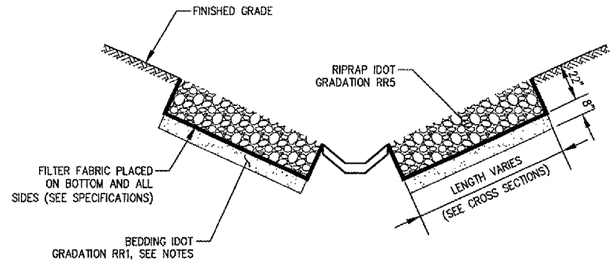

NOTES:
1. COST OF FILTER FABRIC IS INCIDENTAL TO RIPRAP.
2. SEE PLAN FOR DIMENSIONS.
3. CA–3 MAY BE SUBSTITUTED FOR BEDDING MATERIAL.

SECTION B–B

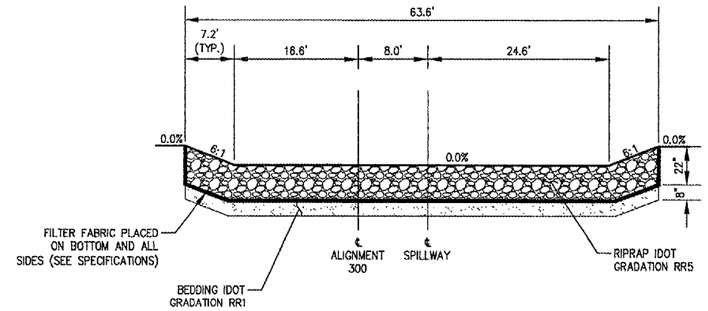

RIPRAP AT BASIN 5 SPILLWAY

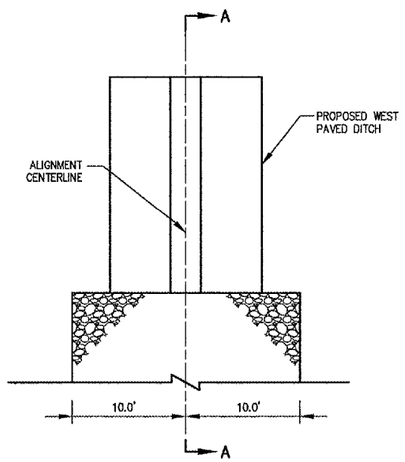

RIPRAP AT WEST PAVED DITCH OUTLET

NOTE
1. COST OF FILTER FABRIC IS INCIDENTAL TO RIPRAP.

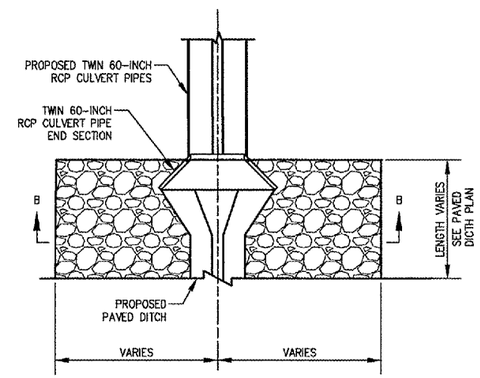

RIPRAP AT TWIN 60-INCH RCP CULVERT PIPE INLET/OUTLET

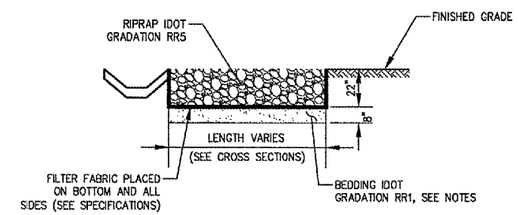

RIPRAP AT EAST PAVED DITCH

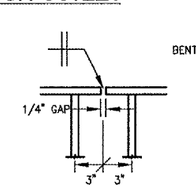

DETAIL 1

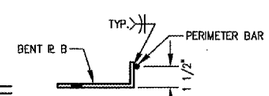

SECTION C–C

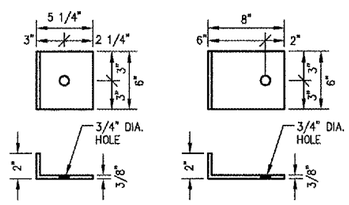

BENT ℞ A
(℞ 3/8" X 6" X 7 1/4")

BENT ℞ B
(℞ 3/8" X 6" X 10")

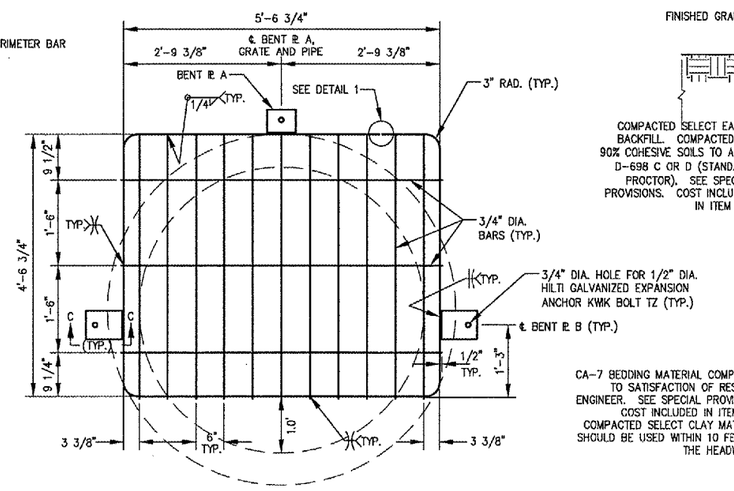

GRATING FOR 60" RCP AT END SECTION
(PAID FOR UNDER ITEM AR800975)

NOTES
1. BARS AND PLATES ARE HOT ROLLED STEEL.
2. BARS AND PLATES AND BOLTS ARE GALVANIZED. HOT DIP ASSEMBLY PER ASTM A153
3. HORIZONTAL BARS ARE UNDER THE PERIMETER BAR.
4. VERTICAL BARS ARE ON TOP OF THE PERIMETER BAR.
5. AT OUTSIDE CONNECTION LOCATION, BEND BENT ℞ B AS REQUIRED TO BE FLUSH WITH WINGWALL FACE

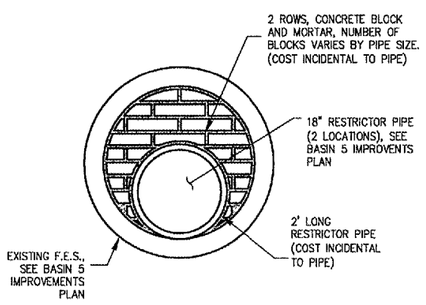

RESTRICTOR PIPE

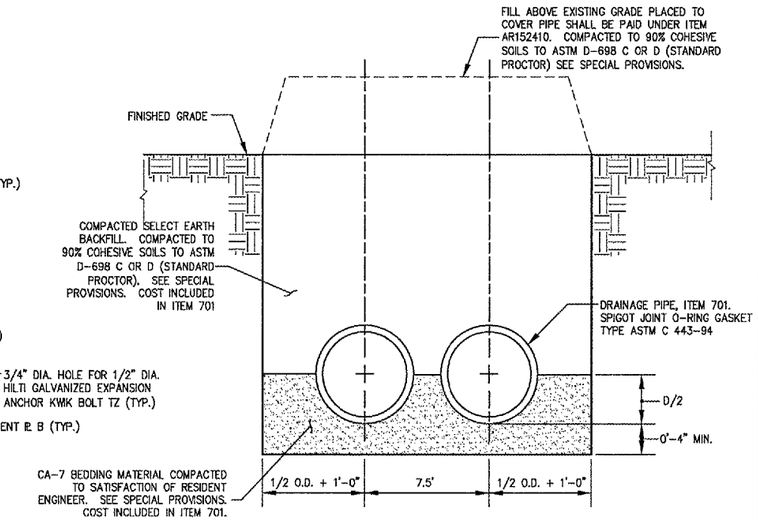

NOTES
1. UNSUITABLE MATERIAL ENCOUNTERED DURING PLACEMENT OF BEDDING SHALL BE REPLACED WITH CA–6 BACKFILL UNDER CA–7, PAID UNDER ITEM AR800926.

PIPE TRENCH

DETAILS SHOWN ARE NOT TO SCALE

LE037

HANSON

HANSON PROFESSIONAL SERVICES INC.

815 Commerce Drive, Suite 200
Oak Brook, Illinois 60523
Telephone: 630.990.3800
Fax: 630.990.3801

Chicago-Romeoville Airport

JOLIET REGIONAL PORT DISTRICT

1 Hangar Road
Romeoville, Illinois 60446
Telephone: 815.838.9497
Fax: 815.838.9524

CONSTRUCT RUNWAY 2-20 DRAINAGE CULVERTS AND IMPROVEMENTS

AIP PROJECT NO. 3-17-0140-B40
IDA PROJECT NO. LOT-3596

No.	Drawing Issue Description	Date	By

Date
MAY 5, 2006

Sheet Title
DRAINAGE DETAILS

840–05C8046
Project Number

LDH 01/12/06
Layout By Date

LDH 01/12/06
Designed By Date

CRC 05/05/06
Reviewed By Date

LDH
Drawn By

48
Sheet No.

L:\05C085\020840\05C8046\DRAWINGS\SHEETS\48-DRAINAGE DETAILS.DWG MAY 08, 2006 1:55PM LDH