93411

ROUTE NO.	SECTION	COUNTY	TOTAL SHEETS	SHEET NO.
TR-324	*	MORGAN	10	6
FED. RD. DIST. NO.		ILLINOIS	FED. AID PROJECT	

* 05-01117-00-BR

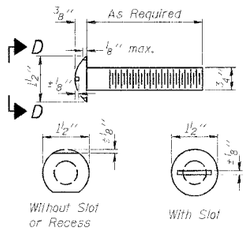

VIEW D-D
ROUND HEAD BOLT

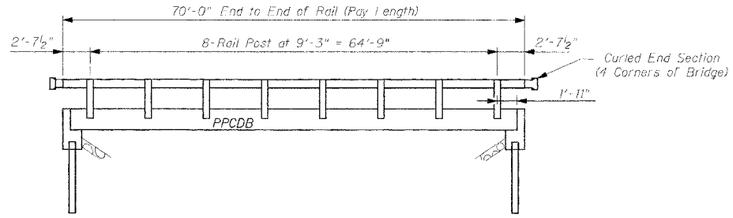

ELEVATION TYPE S1 STEEL RAILING

BILL OF MATERIAL

Item	Unit	Quantity
Steel Railing, Type S1	Foot	140.0

The curled end sections shall be included in the cost of the Steel Railing.

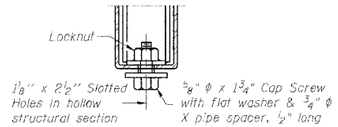

RAIL SPLICE CONNECTION
AT EXPANSION JT.

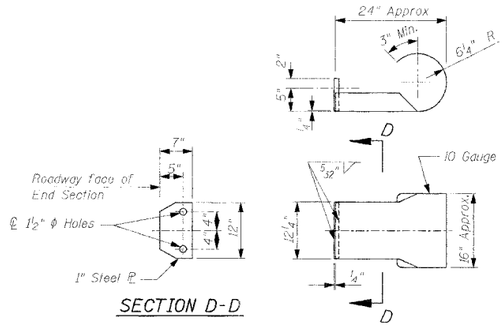

SECTION D-D

CURLED END SECTION DETAILS
(4 REQUIRED)

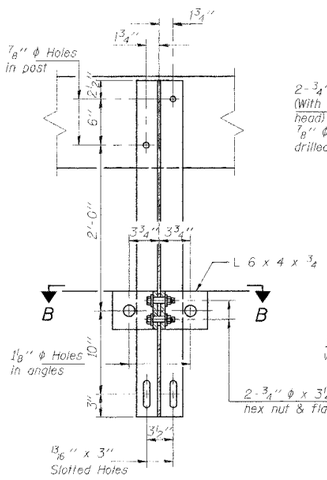

SECTION A-A

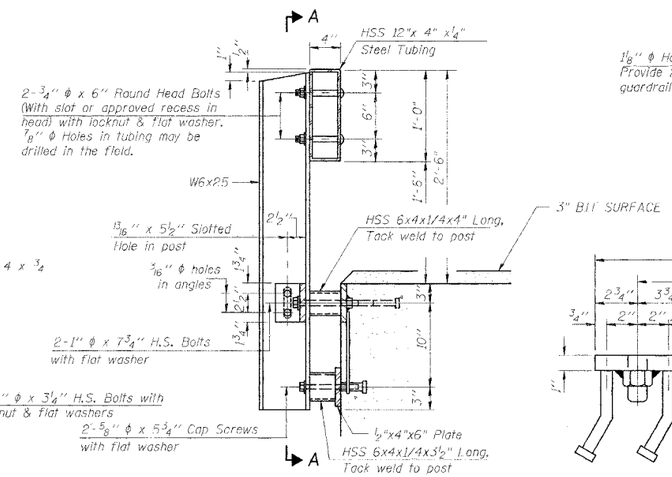

SECTION AT RAIL POST

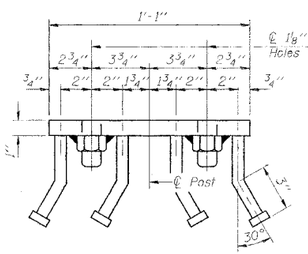

VIEW C-C

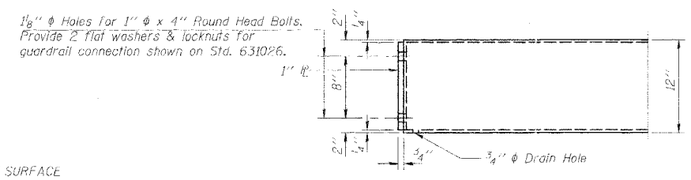

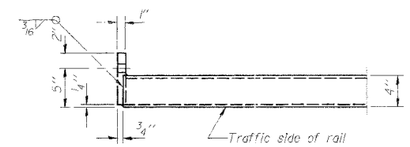

END OF RAIL DETAILS

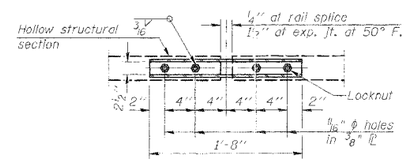

PLAN-BOTT. SPLICE ℙ
TYPICAL

NOTES

Hollow structural sections shall conform to the requirements of ASTM designation A 500 Grade B Structural Steel Tubing and shall meet the longitudinal CVN requirements of 15 ft-lbs at 0° F.

All other steel shapes and plates shall conform to the requirements of AASHTO M 270 Grade 36 except posts and angles shall conform to AASHTO M 270, Grade 50.

Bolts, cap screws, and nuts shall conform to the requirements of ASTM designation A 307 except for high strength bolts, nuts and washers noted which shall conform to AASHTO M 164.

All bolts, nuts, cap screws, washers and lock washers shall be galvanized according to AASHTO M 232.

All posts, railing, rail splices, anchor devices and angles shall be galvanized after shop fabrication according to AASHTO M 111 and ASTM A 385. Galvanized rail shall not be painted.

Railing shall be according to Section 509 of the Standard Specifications, except as noted, and will be paid for at the contract unit price per foot for STEEL RAILING, TYPE S-1.

All field drilled holes shall be coated with an approved zinc rich paint before erection.

The lower portion of the post flange in contact with concrete shall receive two coats of asphalt paint conforming to Section 1060.07 Type II or place 1/8" fabric bearing pad between the post and concrete.

The 3/4" ϕ high strength bolts used to connect the 6 x 4 x 3/4 angles to the post shall be tightened according to Article 505.04(f)(2) of the Standard Specifications. The 1" ϕ high strength bolts connecting the angles to the concrete shall be tightened to a snug fit and given an additional 1/8 turn. The 5/8" ϕ cap screws in bottom of posts shall be tightened to a snug fit only.

For multi-span bridges, sufficient 1/4" x 6" x 1'-2" galvanized steel shims shall be provided to align rail between adjacent spans. Cost included with STEEL RAILING, TYPE S1.

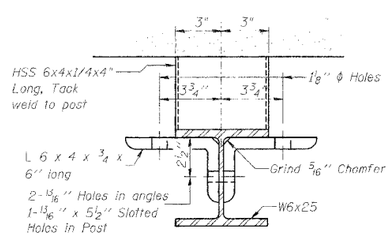

SECTION B-B

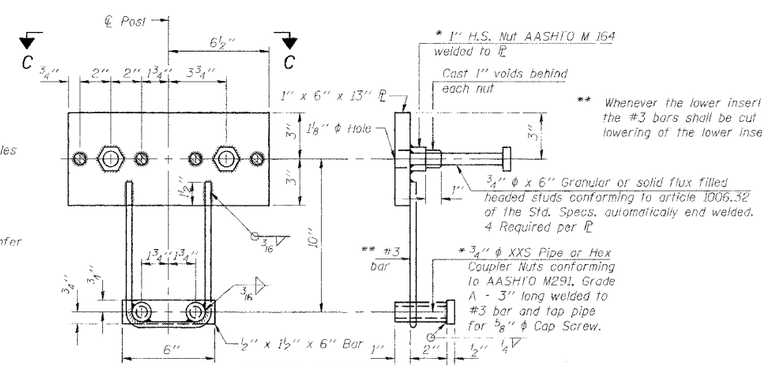

** Whenever the lower insert assemblies interfere with strand locations, the #3 bars shall be cut and adjusted in order to allow raising or lowering of the lower inserts. Maximum adjustment not to exceed 1/2".

ANCHOR DEVICE

* Threaded areas shall be plugged or blocked off during casting of beam.

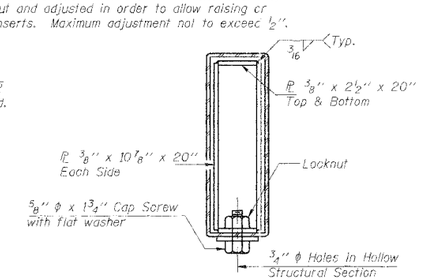

SECTIONS AT RAIL SPLICE

R-23A 9-01-03

DRAWN BY LEL	TYPE S1 STEEL RAILING
CHECKED BY LEL	S.N. 069-3259
APPROVED BY REG	FARMER ROAD (TR-324)
DATE FEBRUARY, 2006	OVER INDIAN CREEK
REVISIONS (DATE / BY)	MORGAN COUNTY, ILLINOIS

BENTON & ASSOCIATES, INC.
Consulting Engineers / Land Surveyors
1970 West Lafayette Ave. Jacksonville, IL 62650
Phone: 217-245-4146 Fax: 217-245-4149
IL Design Firm Registration No. 184-000852
BENTON & ASSOCIATES INC

FIELD BOOK: SCALE: JOB NO. 05E1556 SHEET 6 OF