ROUTE NO.	SECTION	COUNTY	TOTAL SHEETS	SHEET NO.
343 & 1362	01-00025-04-RS	LIVINGSTON	12	7

PROJECT NO. SR-343(108)

NOT PLOTTED TO SCALE

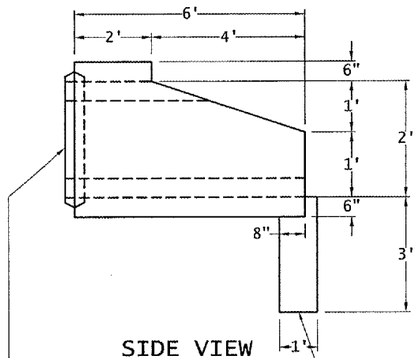

SIDE VIEW

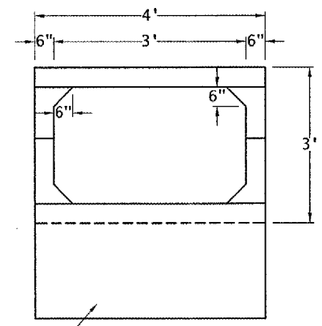

END VIEW

PRECAST OR FIELD POURED TOE WALL (CLASS SI CONCRETE, INCIDENTAL TO BOX CULVERT END SECTION)

END CONNECTION TO FIT PRECAST BOX CULVERT BELL OR SPIGOT SHALL BE OMITTED WHEN CONNECTING TO EXISTING BOX CULVERT

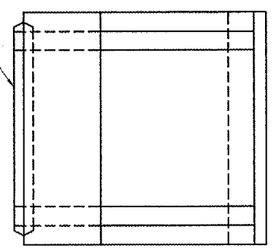

PLAN VIEW

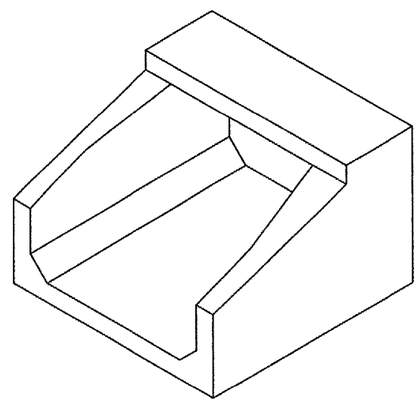

ISOMETRIC VIEW

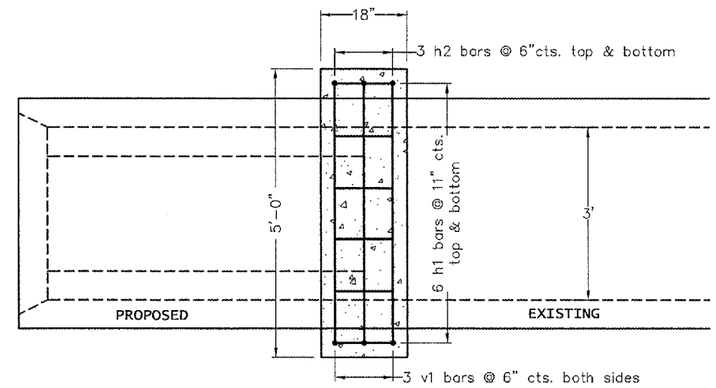

CONCRETE COLLAR DETAIL - PLAN VIEW

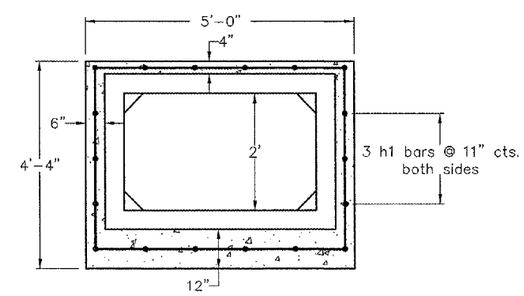

CONCRETE COLLAR DETAIL - END VIEW

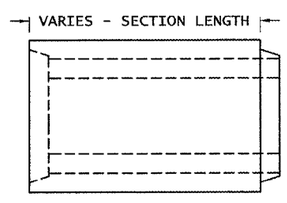

ELEVATION

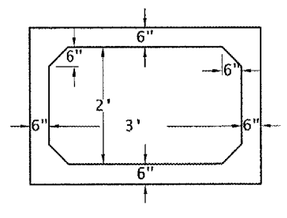

TYPICAL BOX SECTION END VIEW

CONCRETE COLLAR QTYS. - INCIDENTAL TO CONCRETE COLLARS

BAR	SIZE	LENGTH	NO.	SHAPE
h1	#5	1'-0"	18x2	-----
h2	#5	4'-6"	6x2	-----
v1	#5	3'-8"	6x2	-----

CONCRETE QTY. PER COLLAR = 0.5 C.Y. x 2 COLLARS

BOX EXTENSION WEST OF CH 3
- PCBC 3X2 = 48.0 FOOT
- BOX CULVERT END SECTIONS = 1.0 EACH
- CONCRETE COLLAR = 1.0 EACH

BOX EXTENSION EAST OF CH 3
- PIPE CULVERT REMOVAL = 6.0 FOOT
- PCBC 3X2 = 24.0 FOOT
- BOX CULVERT END SECTIONS = 1.0 EACH
- CONCRETE COLLAR = 1.0 EACH

STA 530+23 TO 530+79 - BOX CULVERT 3'x2' EXTENSION QUANTITIES