STATE OF ILLINOIS
DEPARTMENT OF TRANSPORTATION

ROUTE NO.	SECTION	COUNTY	TOTAL SHEETS	SHEET NO.
		Tazewell		16
FED. ROAD DIST. NO. 7	ILLINOIS	FED. AID PROJECT-		

SHEET NO. 5
11 SHEETS

Contract Number: 68484

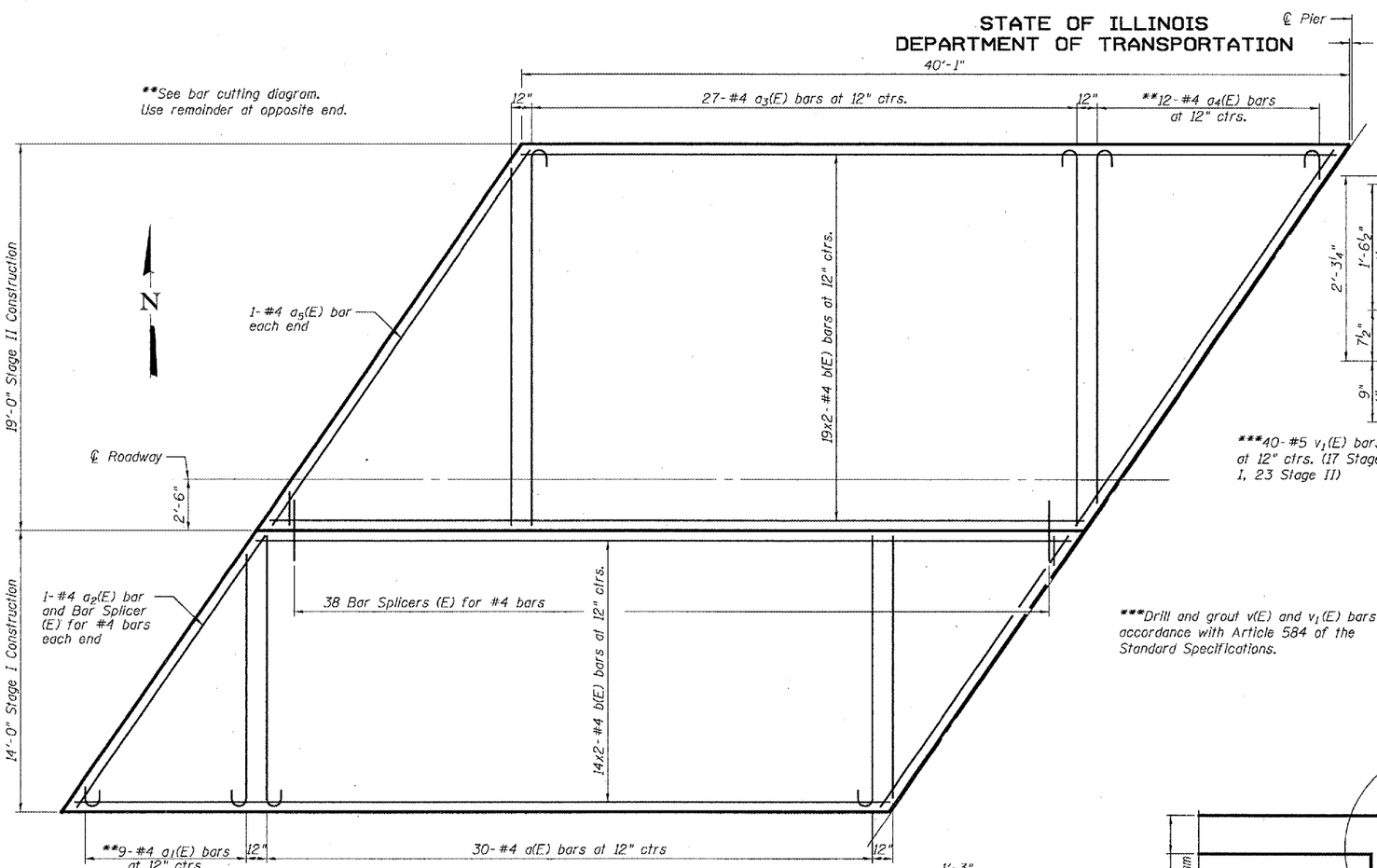

PARTIAL OVERLAY PLAN

(Span 1 Shown, Span 2 Similar)

Note:
Concrete wearing surface to be poured after grouting keys.

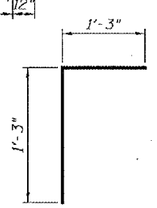

BAR v_1(E)

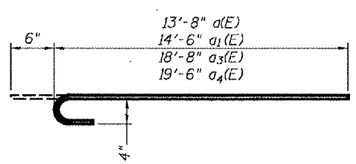

BARS a(E), a_1(E), a_3(E) and a_4(E)

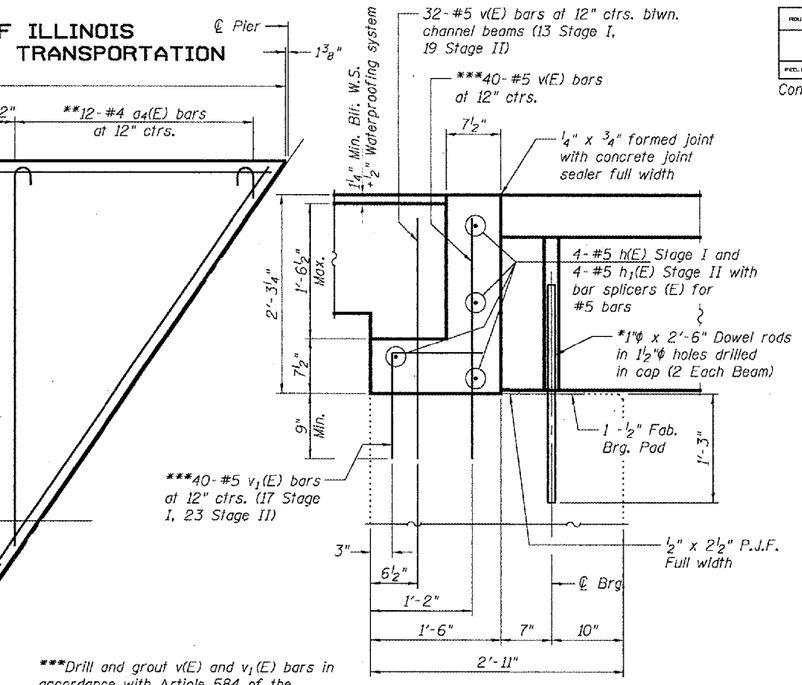

***Drill and grout v(E) and v_1(E) bars in accordance with Article 584 of the Standard Specifications.

TYPICAL ABUTMENT SECTION

(Dimensions at Rt. L's to End of Beam)
(Near ℄ Roadway)

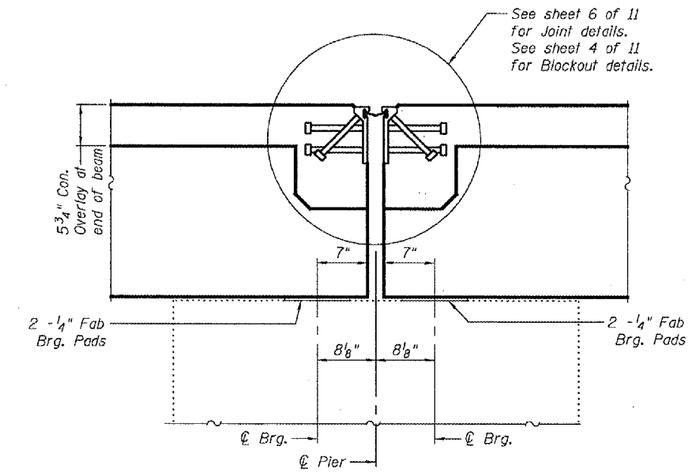

TYPICAL PIER SECTION

(Dimensions at Rt. L's to End of Beam)
(Near ℄ Roadway)

*Existing Dowel Rods shall be burned off flush with the top of the existing concrete, ground smooth, and sealed with epoxy. Cost to be included in the cost of Removal of Existing Superstructure. New Dowel Rods shall be grouted and allowed to cure a minimum of 24 hours prior to grouting the shear keys.

MIN. BAR LAP

#4 = 1'-8"

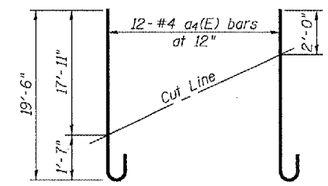

a_4(E) FIELD CUTTING DIAGRAM

Order a_4(E) full length. Cut as shown and use remainder of bars in opposite end.

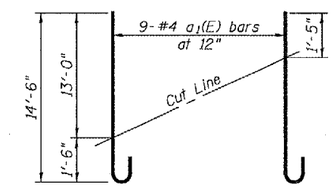

a_1(E) FIELD CUTTING DIAGRAM

Order a_1(E) full length. Cut as shown and use remainder of bars in opposite end.

BILL OF MATERIAL

Bar	No.	Size	Length	Shape
a(E)	60	#4	14'-2"	
a_1(E)	18	#4	15'-0"	
a_2(E)	4	#4	16'-6"	
a_3(E)	54	#4	19'-2"	
a_4(E)	24	#4	20'-0"	
a_5(E)	4	#4	22'-9"	
a_6(E)	6	#5	16'-6"	
a_7(E)	6	#5	22'-9"	
b(E)	132	#4	20'-9"	
h(E)	8	#5	16'-6"	
h_1(E)	8	#5	22'-9"	
v(E)	144	#5	2'-9"	
v_1(E)	80	#5	2'-6"	
Reinforcement Bars, Epoxy Coated			Pound	4,890
Bar Splicers			Each	94
Concrete Wearing Surface, 5"			Sq. Yd.	294
Concrete Structures			Cu. Yd.	5.7

Reinforcement bars designated (E) shall be epoxy coated.

Bars indicated thus 1 x 2-#5 etc. indicates 1 line of bars with 2 lengths per line.

DESIGNED	P.S.J.
CHECKED	S.J.B.
DRAWN	Drew Christopher
CHECKED	P.S.J. S.J.B.

April 24, 2006
EXAMINED John A. Morris — ENGINEER OF STRUCTURAL SERVICES
PASSED Ralph E. Anderson — ENGINEER OF BRIDGES AND STRUCTURES

OVERLAY DETAILS AND TYPICAL SECTIONS
IL 122 / SUGAR CREEK
TAZEWELL COUNTY
SN 090-0058

...\version 8 archive\0900058.dgn 5/9/2006 1:41:10 PM