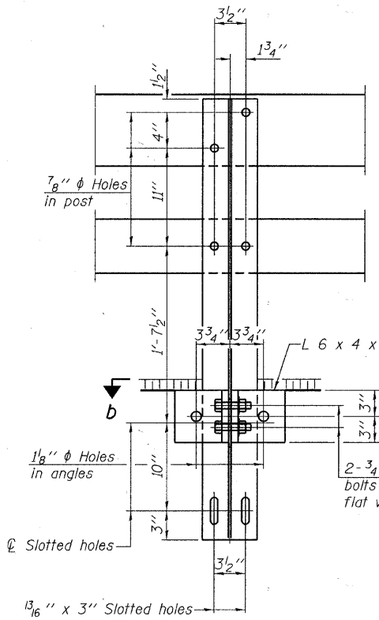

SECTION A-A

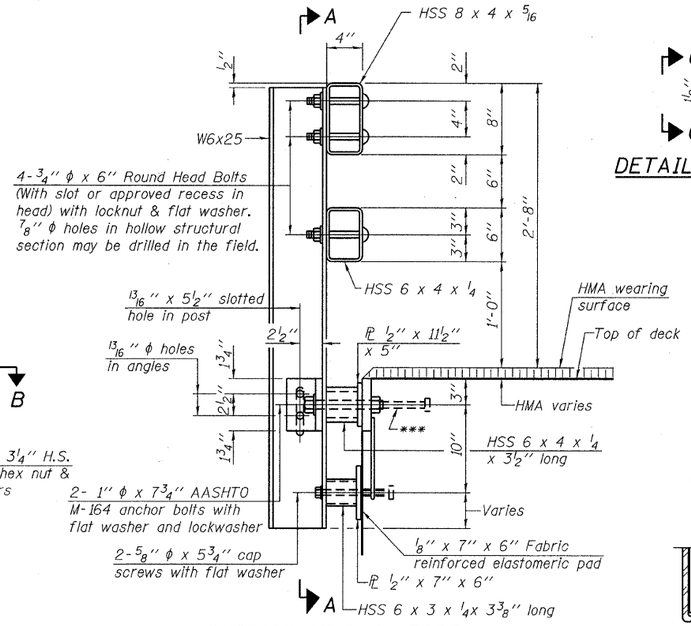

SECTION AT RAIL POST

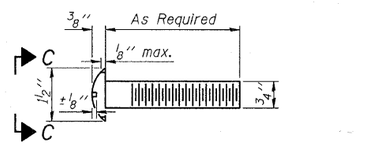

DETAIL OF ¾" ϕ ROUND HEAD BOLT

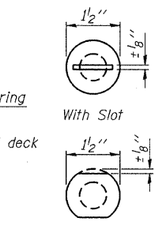

VIEW C-C

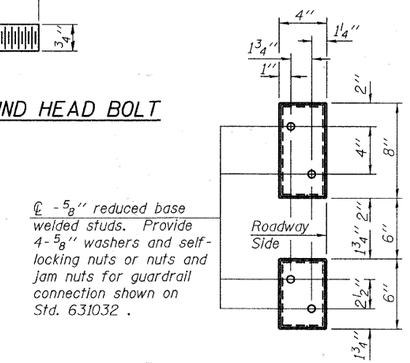

VIEW D-D

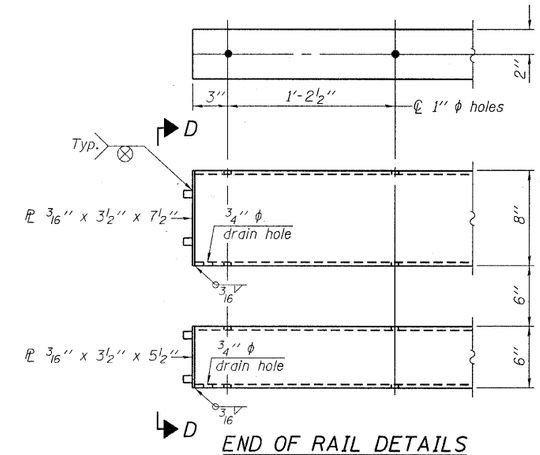

END OF RAIL DETAILS

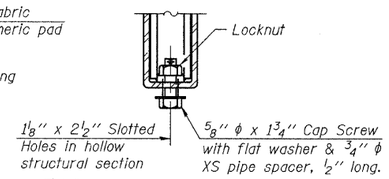

RAIL SPLICE CONNECTION AT EXPANSION JT.

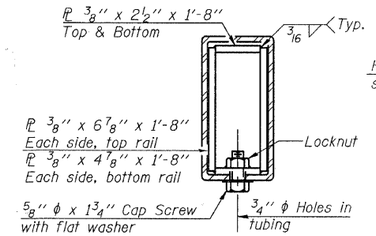

SECTION AT RAIL SPLICE

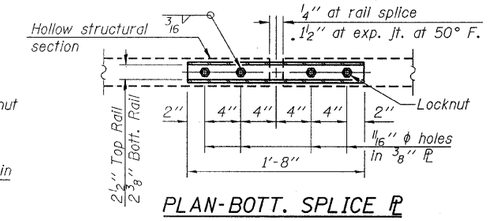

PLAN-BOTT. SPLICE PL TYPICAL

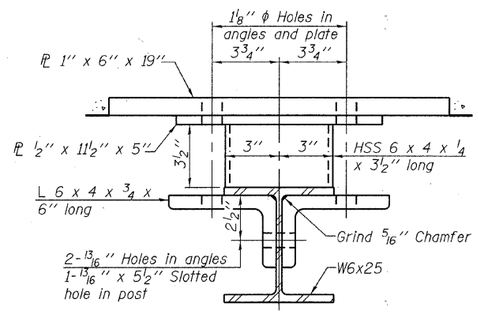

SECTION B-B

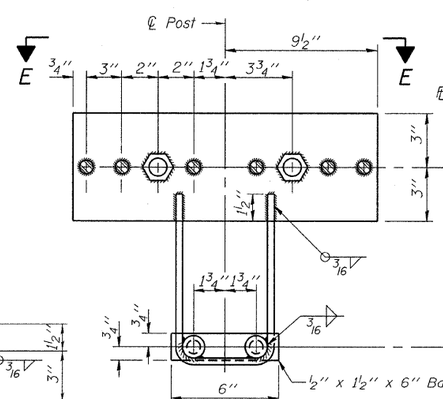

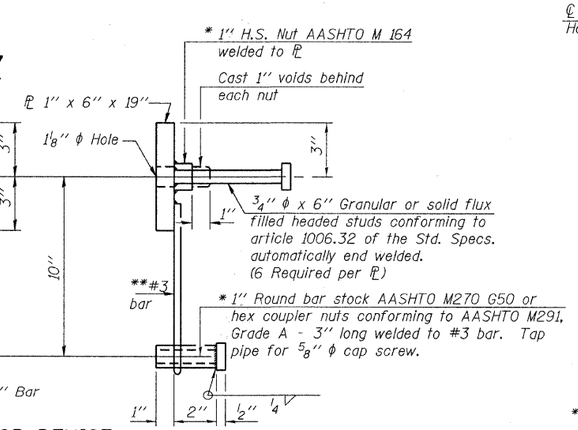

ANCHOR DEVICE

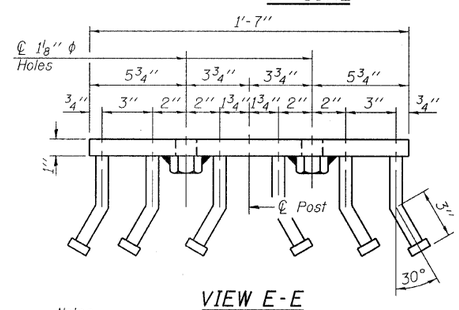

VIEW E-E

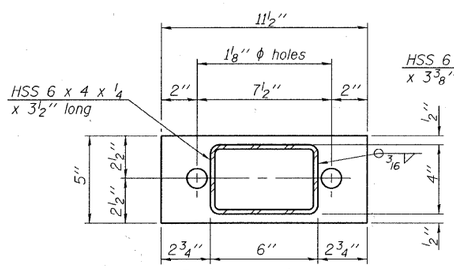

PL ½" x 11½" x 5"

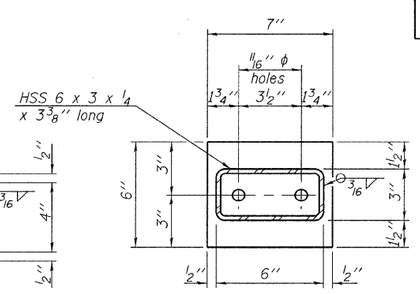

PL ½" x 7" x 6"

Notes:

All field drilled holes shall be coated with an approved zinc rich paint before erection.

For multi-span bridges, sufficient ¼" x 6" x 1'-2" galvanized steel shims shall be provided to align rail between adjacent spans. Cost included with Steel Railing, Type SM.

All steel rail members shall be galvanized according to Article 509.05 of the Standard Specifications.

*** The studs of the anchor devices shall be placed below the top reinforcement bars and the outermost longitudinal reinforcement bar shall be placed directly above the studs of the rail post anchor device.

BILL OF MATERIAL

Item	Unit	Quantity
Steel Railing, Type SM	Foot	213

R-34HMAWS 7-1-10 (6'-3" Maximum Post Spacing) (1¼" minimum to 3⅛" maximum HMA thickness)

*Threaded areas shall be plugged or blocked off during casting of beam. Galvanized after fabrication.

** Whenever the lower insert assemblies interfere with strand locations, the #3 bars shall be cut and adjusted in order to allow raising or lowering of the lower inserts. Maximum adjustment not to exceed ½".

FILE NAME = 112368-sht-bridge.dgn	USER NAME =	DESIGNED - D.W.T.	REVISED -
HAMPTON, LENZINI AND RENWICK, INC. 3005 STEVENSON DRIVE, SUITE 201 SPRINGFIELD, ILLINOIS 62703 ILLINOIS PROFESSIONAL DESIGN FIRM LS / FE / SE CORP. 184.000959		CHECKED - S.M.S.	REVISED -
	PLOT SCALE =	DRAWN - D.A.B.	REVISED -
	PLOT DATE = 3/29/2012	CHECKED - S.W.M.	REVISED -

STATE OF ILLINOIS
CRAWFORD COUNTY HIGHWAY DEPARTMENT

STEEL RAILING, TYPE SM WITH HOT-MIX ASPHALT WEARING SURFACE
STRUCTURE NO. 017-3061

SHEET NO. 6 OF 12 SHEETS

C.H.	SECTION	COUNTY	TOTAL SHEETS	SHEET NO.
3	11-00096-00-BR	CRAWFORD	16	10

CONTRACT NO. 95682

ILLINOIS FED. AID PROJECT